UFSAR Table of Contents

Chapter 1 — Introduction and General Description of the Plant

Chapter 2 — Site Characteristics

Chapter 3 — Design of Structures, Components, Equipment and Systems

Chapter 4 — Reactor

Chapter 5 — Reactor Coolant System and Connected Systems

Chapter 6 — Engineered Safety Features

Chapter 7 — Instrumentation and Controls

Chapter 8 — Electric Power

Chapter 9 — Auxiliary Systems

Chapter 10 — Steam and Power Conversion

Chapter 11 — Radioactive Waste Management

Chapter 12 — Radiation Protection

Chapter 13 — Conduct of Operation

Chapter 14 — Initial Test Program

Chapter 15 — Accident Analyses

Chapter 16 — Technical Specifications

Chapter 17 — Quality Assurance

Chapter 18 — Human Factors Engineering

Chapter 19 — Probabilistic Risk Assessment

UFSAR Formatting Legend

Color	Description
	Original Westinghouse AP1000 DCD Revision 19 content
	Departures from AP1000 DCD Revision 19 content
	Standard FSAR content
	Site-specific FSAR content
	Linked cross-references (chapters, appendices, sections, subsections, tables, figures, and references)

TABLE OF CONTENTS

Section	Title	Page
CHAPTER 10	STEAM AND POWER CONVERSION	10.1-1
10.1	Summary Description	10.1-1
10.1.1	General Description	10.1-1
10.1.2	Protective Features	10.1-2
10.1.3	Combined License Information on Erosion-Corrosion Monitoring	10.1-3
10.1.3.1	Erosion-Corrosion Monitoring	10.1-3
10.1.3.2	Procedures	10.1-4
10.1.3.3	Plant Chemistry	10.1-5
10.1.4	References	10.1-5
10.2	Turbine-Generator	10.2-1
10.2.1	Design Basis	10.2-1
10.2.1.1	Safety Design Basis	10.2-1
10.2.1.2	Power Generation Design Basis	10.2-1
10.2.2	System Description	10.2-1
10.2.2.1	Turbine-Generator Description	10.2-2
10.2.2.2	Turbine-Generator Cycle Description	10.2-2
10.2.2.3	Excitation System	10.2-3
10.2.2.4	Digital Electrohydraulic System Description	10.2-3
10.2.2.5	Turbine Protective Trips	10.2-6
10.2.2.6	Other Protective Systems	10.2-9
10.2.2.7	Plant Loading and Load Following	10.2-9
10.2.2.8	Inspection and Testing Requirements	10.2-9
10.2.3	Turbine Rotor Integrity	10.2-9
10.2.3.1	Materials Selection	10.2-9
10.2.3.2	Fracture Toughness	10.2-10
10.2.3.3	High Temperature Properties	10.2-11
10.2.3.4	Turbine Rotor Design	10.2-11
10.2.3.5	Preservice Tests and Inspections	10.2-12
10.2.3.6	Maintenance and Inspection Program Plan	10.2-13
10.2.4	Evaluation	10.2-14
10.2.5	Instrumentation Applications	10.2-14
10.2.6	Combined License Information on Turbine Maintenance and Inspection	10.2-15
10.2.7	References	10.2-16
10.3	Main Steam Supply System	10.3-1
10.3.1	Design Basis	10.3-1
10.3.1.1	Safety Design Basis	10.3-1
10.3.1.2	Power Generation Design Basis	10.3-3
10.3.2	System Description	10.3-3
10.3.2.1	General Description	10.3-3
10.3.2.2	Component Description	10.3-4
10.3.2.3	System Operation	10.3-8
10.3.3	Safety Evaluation	10.3-9
10.3.4	Inspection and Testing Requirements	10.3-10
10.3.4.1	Preoperational Testing	10.3-10
10.3.4.2	In-service Testing	10.3-11
10.3.5	Water Chemistry	10.3-11

TABLE OF CONTENTS (CONTINUED)

Section	Title	Page
	10.3.5.1 Chemistry Control Basis	10.3-11
	10.3.5.2 Contaminant Ingress	10.3-12
	10.3.5.3 Condensate Polishing	10.3-12
	10.3.5.4 Chemical Addition	10.3-12
	10.3.5.5 Action Levels for Abnormal Conditions	10.3-13
	10.3.5.6 Layup and Heatup	10.3-13
	10.3.5.7 Chemical Analysis Basis	10.3-13
	10.3.5.8 Sampling	10.3-14
	10.3.5.9 Condenser Inspection	10.3-14
	10.3.5.10 Conformance to Branch Technical Position MTEB 5-3	10.3-14
	10.3.6 Steam and Feedwater System Materials	10.3-14
	10.3.6.1 Fracture Toughness	10.3-14
	10.3.6.2 Material Selection and Fabrication	10.3-14
	10.3.7 Combined License Information	10.3-15
	10.3.8 References	10.3-15
10.4	Other Features of Steam and Power Conversion System	10.4-1
	10.4.1 Main Condensers	10.4-1
	10.4.1.1 Design Basis	10.4-1
	10.4.1.2 System Description	10.4-1
	10.4.1.3 Safety Evaluation	10.4-2
	10.4.1.4 Tests and Inspections	10.4-3
	10.4.1.5 Instrumentation Applications	10.4-3
	10.4.2 Main Condenser Evacuation System	10.4-3
	10.4.2.1 Design Basis	10.4-3
	10.4.2.2 System Description	10.4-4
	10.4.2.3 Safety Evaluation	10.4-5
	10.4.2.4 Tests and Inspections	10.4-5
	10.4.2.5 Instrumentation Applications	10.4-5
	10.4.3 Gland Seal System	10.4-5
	10.4.3.1 Design Basis	10.4-5
	10.4.3.2 System Description	10.4-6
	10.4.3.3 Safety Evaluation	10.4-7
	10.4.3.4 Tests and Inspections	10.4-7
	10.4.3.5 Instrumentation Applications	10.4-7
	10.4.4 Turbine Bypass System	10.4-7
	10.4.4.1 Design Basis	10.4-7
	10.4.4.2 System Description	10.4-8
	10.4.4.3 System Operation	10.4-9
	10.4.4.4 Safety Evaluation	10.4-9
	10.4.4.5 Inspection and Testing Requirements	10.4-10
	10.4.4.6 Instrumentation Applications	10.4-10
	10.4.5 Circulating Water System	10.4-10
	10.4.5.1 Design Basis	10.4-10
	10.4.5.2 System Description	10.4-10
	10.4.5.3 Safety Evaluation	10.4-13
	10.4.5.4 Tests and Inspections	10.4-14
	10.4.5.5 Instrumentation Applications	10.4-14

TABLE OF CONTENTS (CONTINUED)

Section	Title	Page
10.4.6	Condensate Polishing System	10.4-15
10.4.6.1	Design Basis	10.4-15
10.4.6.2	System Description	10.4-15
10.4.6.3	System Operation	10.4-16
10.4.6.4	Safety Evaluations	10.4-16
10.4.6.5	Tests and Inspections	10.4-16
10.4.6.6	Instrument Applications	10.4-17
10.4.7	Condensate and Feedwater System	10.4-17
10.4.7.1	Design Basis	10.4-17
10.4.7.2	System Description	10.4-19
10.4.7.3	Safety Evaluation	10.4-27
10.4.7.4	Tests and Inspections	10.4-28
10.4.7.5	Instrumentation Applications	10.4-29
10.4.8	Steam Generator Blowdown System	10.4-29
10.4.8.1	Design Basis	10.4-30
10.4.8.2	System Description	10.4-31
10.4.8.3	Safety Evaluation	10.4-35
10.4.8.4	Inspection and Testing Requirements	10.4-36
10.4.9	Startup Feedwater System	10.4-36
10.4.9.1	Design Basis	10.4-37
10.4.9.2	System Description	10.4-39
10.4.9.3	Safety Evaluation	10.4-42
10.4.9.4	Tests and Inspections	10.4-43
10.4.9.5	Instrumentation Applications	10.4-44
10.4.10	Auxiliary Steam System	10.4-44
10.4.10.1	Design Basis	10.4-44
10.4.10.2	System Description	10.4-44
10.4.10.3	Safety Evaluation	10.4-46
10.4.10.4	Tests and Inspections	10.4-46
10.4.10.5	Instrumentation Applications	10.4-46
10.4.11	Turbine Island Chemical Feed	10.4-46
10.4.11.1	Design Basis	10.4-46
10.4.11.2	System Description	10.4-46
10.4.11.3	Safety Evaluation	10.4-48
10.4.11.4	Tests and Inspections	10.4-48
10.4.11.5	Instrumentation Applications	10.4-48
10.4.12	Combined License Information	10.4-48
10.4.12.1	Circulating Water System	10.4-48
10.4.12.2	Condensate, Feedwater and Auxiliary Steam System Chemistry Control	10.4-48
10.4.12.3	Potable Water	10.4-48
10.4.13	References	10.4-48

LIST OF TABLES

Table Number	Title	Page
10.1-1	Significant Design Features and Performance Characteristics for Major Steam and Power Conversion System Components	10.1-6
10.2-1	Turbine-Generator and Auxiliaries Design Parameters	10.2-17
10.2-2	Turbine Overspeed Protection	10.2-18
10.2-3	Generator Protective Devices Furnished with the Voltage Regulator Package	10.2-19
10.2-4	Turbine-Generator Valve Closure Times	10.2-21
10.3.2-1	Main Steam Supply System Design Data	10.3-16
10.3.2-2	Design Data for Main Steam Safety Valves	10.3-17
10.3.2-3	Description of Main Steam and Main Feedwater Piping	10.3-18
10.3.2-4	Main Steam Branch Piping (2.5-Inch and Larger) Downstream of MSIV	10.3-19
10.3.3-1	Main Steam Supply System Failure Modes and Effects Analysis	10.3-20
10.3.5-1	Guidelines for Secondary Side Water Chemistry During Power Operation	10.3-30
10.3.5-2	Guidelines for Steam Generator Water During Cold Shutdown/Wet Layup	10.3-33
10.3.5-3	Guidelines for Steam Generator Blowdown During Heatup (> 200°F to < 5% Power)	10.3-34
10.4.1-1	Main Condenser Design Data	10.4-50
10.4.5-1	Design Parameters for Major Circulating Water System Components	10.4-51
10.4.7-1	Condensate and Feedwater System Component Failure Analysis	10.4-52
10.4.9-1	Startup Feedwater System Component Failure Analysis	10.4-54
10.4.9-2	Nominal Component Design Data – Startup Feedwater System	10.4-56
10.4-201	Not Used	10.4-57
10.4-202	Not Used	10.4-57

LIST OF FIGURES

Figure Number	Title	Page
10.1-1	Rated Heat Balance	10.1-7
10.2-1	(Sheet 1 of 2) Turbine Generator Outline Drawing	10.2-22
10.2-1	(Sheet 2 of 2) Turbine Generator Outline Drawing	10.2-23
10.2-2	Emergency Trip System Functional Diagram	10.2-24
10.3.2-1	(Sheet 1 of 2) Simplified Main Steam Piping and Instrumentation Diagram (Safety-Related System)	10.3-35
10.3.2-1	(Sheet 2 of 2) Simplified Main Steam Piping and Instrumentation Diagram (Safety Related System)	10.3-36
10.3.2-2	Main Steam System Diagram	10.3-37
10.4.3-1	Gland Seal System Piping and Instrumental Diagram	10.4-58
10.4.6-1	Condensate Polishing System Piping and Instrumentation Diagram (Typical)	10.4-59
10.4.7-1	(Sheet 1 of 4) Condensate and Feedwater System Piping and Instrumentation Diagram	10.4-60
10.4.7-1	(Sheet 2 of 4) Condensate and Feedwater System Piping and Instrumentation Diagram	10.4-61
10.4.7-1	(Sheet 3 of 4) Condensate and Feedwater System Piping and Instrumentation Diagram	10.4-62
10.4.7-1	(Sheet 4 of 4) Simplified Condensate and Feedwater System Piping and Instrumentation Diagram	10.4-63
10.4.8-1	Steam Generator Blowdown System Piping and Instrumentation Diagram	10.4-64
10.4-201	Circulating Water System Diagram	10.4-65

Chapter 10 Steam and Power Conversion

10.1 Summary Description

The steam and power conversion system is designed to remove heat energy from the reactor coolant system via the two steam generators and to convert it to electrical power in the turbine-generator. The main condenser deaerates the condensate and transfers heat that is unusable in the cycle to the circulating water system. The regenerative turbine cycle heats the feedwater, and the main feedwater system returns it to the steam generators.

Table 10.1-1 gives the significant design and performance data for the major system components. Figure 10.1-1 shows the rated heat balance for the turbine cycle process.

10.1.1 General Description

The steam generated in the two steam generators is supplied to the high-pressure turbine by the main steam system. After expansion through the high-pressure turbine, the steam passes through the two moisture separator/reheaters (MSRs) and is then admitted to the three low-pressure turbines. A portion of the steam is extracted from the high- and low-pressure turbines for seven stages of feedwater heating.

Exhaust steam from the low-pressure turbines is condensed and deaerated in the main condenser. The heat rejected in the main condenser is removed by the circulating water system (CWS). The condensate pumps take suction from the condenser hotwell and deliver the condensate through four stages of low-pressure closed feedwater heaters to the fifth stage, open deaerating heater. Condensate then flows to the suction of the steam generator feedwater booster pump and is discharged to the suction of the main feedwater pump. The steam generator feedwater pumps discharge the feedwater through two stages of high-pressure feedwater heating to the two steam generators.

The turbine-generator has an output of approximately 1,199,500 kW for the Westinghouse nuclear steam supply system (NSSS) thermal output of 3,415 MWt. The principal turbine-generator conditions for the turbine rating are listed in Table 10.1-1. The rated system conditions for the NSSS are listed in Table 10.1-1. The systems of the turbine cycle have been designed to meet the maximum expected turbine generator conditions.

Instrumentation systems are designed for the normal operating conditions of the steam and condensate systems. The systems are designed for safe and reliable control and incorporate requirements for performance calculations and periodic heat balances. Instrumentation for the secondary cycle is also provided to meet recommendations by the turbine supplier and ANSI/ASME TDP-2-1985, "Recommended Practices for the Prevention of Water Damage to Steam Turbines Used for Electric Power Generation." Design features for prevention of water hammer in the steam generator are described in Subsection 5.4.2.2. Continuous or semi-continuous sampling instrumentation and grab sample points are provided so that water chemistry in the secondary cycle can be maintained within acceptable limits, as required by the nuclear steam system and turbine suppliers (see Subsections 9.3.4 and 10.3.5). Condenser tube/tube sheet leakage can be identified and isolated by using condenser conductivity sampling provisions.

Criteria and bases for safety-related instrumentation for main steam isolation are discussed in Section 7.3.

10.1.2 Protective Features

Loss of External Electrical Load and/or Turbine Trip Protection

In the event of turbine trip, steam is bypassed to the condenser via the turbine bypass valves and, if required, to the atmosphere via the atmospheric relief valves. Steam relief permits energy removal from the reactor coolant system. Load rejection capability is discussed in Subsections 10.3.2.3.1 and 15.2.2.

Overpressure Protection

Spring-loaded safety valves are provided on both main steam lines, in accordance with the ASME Code, Section III. The pressure relief capacity of the safety valves is such that the energy generated at the high-flux reactor trip setting can be dissipated through this system. The design capacity of the main steam safety valves equals or exceeds 105 percent of the NSSS design steam flow at an accumulation pressure not exceeding 110 percent of the main steam system design pressure. Overpressure protection for the main steam lines is a safety-related function. The main steam safety valves are described in Subsection 10.3.2.

In addition, the shell sides of the feedwater heaters and the moisture separator/reheaters are provided with overpressure protection in accordance with ASME Code, Section VIII, Division 1, or equivalent standards.

Loss of Main Feedwater Flow Protection

The startup feedwater pumps provide feedwater to the steam generators for the removal of sensible and decay heat whenever main feedwater flow is interrupted, including loss of offsite electric power. This system is described in Subsection 10.4.9.

Turbine Overspeed Protection

During normal operations, turbine overspeed protection is provided by the action of the redundant controller of the electro-hydraulic control system. Additional protection is provided by an overspeed protection system, which continuously monitors critical turbine parameters on a three-channel basis. Each of the channels is independently testable under load with overspeed protection during testing provided by the channels not being tested. If turbine speed exceeds 110 percent of rated speed, the electronic trip system causes steam supply valves to close, tripping the unit. This system is described in Subsection 10.2.2.5.

Turbine Missile Protection

Turbine rotor integrity minimizes the probability of generating turbine missiles and is discussed in Subsection 10.2.3. Turbine missiles are addressed in Subsection 3.5.1.3. The favorable orientation of the turbine-generator directs potential missiles away from safety-related equipment and structures.

Radioactivity Protection

Under normal operating conditions, there are no significant radioactive contaminants present in the steam and power conversion system. However, it is possible for the system to become contaminated through steam generator tube leakage. In this event, radiological monitoring of the main condenser air removal system, the steam generator blowdown system, and the main steam lines will detect contamination and alarm high radioactivity concentrations. A discussion of the radiological aspects of primary-to-secondary system leakage and limiting conditions for operation is contained in Chapter 11. The steam generator blowdown system described in Subsection 10.4.8 and the condensate polishing system described in Subsection 10.4.6 serve to limit the radioactivity level in the secondary cycle.

Erosion-Corrosion Protection

Erosion-corrosion resistant materials are used in steam and power conversion systems for components exposed to single-phase or two-phase flow where significant erosion can occur. Factors considered in the evaluation of erosion-corrosion include system piping and component configuration and geometry, water chemistry, piping and component material, fluid temperature, and fluid velocity. Carbon steel with only carbon and manganese alloying agents is not used for applications subject to significant erosion-corrosion.

In addition to material selection, pipe size and layout may also be used to minimize the potential for erosion-corrosion in systems containing water or two-phase flow. The secondary side water chemistry (see Subsection 10.3.5) uses a volatile pH adjustment chemical to maintain a noncorrosive environment. Steam and power conversion systems are designed to facilitate inspection and erosion-corrosion monitoring programs.

An industry-sponsored computer program developed for nuclear and fossil power plant applications is used to evaluate the rate of wall thinning for components and piping potentially susceptible to erosion-corrosion. The engineering models are the result of research and development in the fields of material science, water chemistry, fluid mechanics, and corrosion engineering. The program quantifies the benefits of piping material, system layout, and sizing considerations used to reduce corrosion rates.

10.1.3 Combined License Information on Erosion-Corrosion Monitoring

10.1.3.1 Erosion-Corrosion Monitoring

The flow accelerated corrosion (FAC) monitoring program analyzes, inspects, monitors and trends those nuclear power plant components that are potentially susceptible to erosion-corrosion damage such as carbon steel components that carry wet steam. In addition, the FAC monitoring program considers the information of Generic Letter 89-08, EPRI NSAC-202L-R3, and industry operating experience. The program requires a grid layout for obtaining consistent pipe thickness measurements when using Ultrasonic Test Techniques. The FAC program obtains actual thickness measurements for highly susceptible FAC locations for new lines as defined in EPRI NSAC-202L-R3 (Reference 201). At a minimum, a CHECWORKS type Pass 1 analysis is used for low and highly susceptible FAC locations and a CHECWORKS type Pass 2 analysis is used for highly susceptible FAC locations when Pass 1 analysis results warrant. To determine wear of piping and components where operating conditions are inconsistent or unknown, the guidance provided in EPRI NSAC-202L is used to determine wear rates.

10.1.3.1.1 Analysis

An industry-sponsored program is used to identify the most susceptible components and to evaluate the rate of wall thinning for components and piping potentially susceptible to FAC. Each susceptible component is tracked in a database and is inspected, based on susceptibility. Analytical methods utilize the results of plant-specific inspection data to develop plant-specific correction factors. This correction accounts for uncertainties in plant data, and for systematic discrepancies caused by plant operation. For each piping component, the analytical method predicts the wear rate, and the estimated time until it must be re-inspected, repaired, or replaced. Carbon steel piping (ASME III and B31.1) that is used for single or multi-phase high temperature flow are the most susceptible to erosion-corrosion damage and receive the most critical analysis.

10.1.3.1.2 Industry Experience

Review and incorporation of industry experience provides a valuable supplement to plant analysis. Industry experience is used to update the program by identifying susceptible components or piping features.

10.1.3.1.3 Inspections

Wall thickness measurements establish the extent of wear in a given component, provide data to help evaluate trends, and provide data to refine the predictive model. Components are inspected for wear using ultrasonic techniques (UT), radiography techniques (RT), or by visual observation. The initial inspections are used as a baseline for later inspections. Each subsequent inspection determines the wear rate for the piping and components and the need for inspection frequency adjustment for those components.

10.1.3.1.4 Training and Engineering Judgement

The FAC program is administered by both trained and experienced personnel. Task specific training is provided for plant personnel that implement the monitoring program. Specific non-destructive examination (NDE) is carried out by personnel qualified in the given NDE method. Inspection data is analyzed by engineers or other experienced personnel to determine the overall effect on the system or component.

10.1.3.1.5 Long-Term Strategy

This strategy focuses on reducing wear rates and performing inspections on the most susceptible locations.

10.1.3.2 Procedures

10.1.3.2.1 Generic Plant Procedure

The FAC monitoring program is governed by procedure. This procedure contains the following elements:

- A requirement to monitor and control FAC.
- Identification of the tasks to be performed and associated responsibilities.
- Identification of the position that has overall responsibility for the FAC monitoring program at each plant.
- Communication requirements between the coordinator and other departments that have responsibility for performing support tasks.
- Quality Assurance requirements.
- Identification of long-term goals and strategies for reducing high FAC wear rates.
- A method for evaluating plant performance against long-term goals.

10.1.3.2.2 Implementing Procedures

The FAC implementing procedures provide guidelines for controlling the major tasks. The plant procedures for major tasks are as follows:

- Identifying susceptible systems.
- Performing FAC analysis.
- Selecting and scheduling components for initial inspection.
- Performing inspections.
- Evaluating degraded components.
- Repairing and replacing components when necessary.
- Selecting and scheduling locations for the follow-on inspections.
- Collection and storage of inspections records.

10.1.3.3 Plant Chemistry

The responsibility for system chemistry is under the purview of the plant chemistry section. The plant chemistry section specifies chemical addition in accordance with plant procedures.

10.1.4 References

201. EPRI NSAC-202L-R3, Recommendations for an Effective Flow-Accelerated Corrosion Program (NSAC-202L-R3), Electric Power Research Institute (EPRI) Technical Report 1011838, Palo Alto, CA, 2006.

Table 10.1-1
Significant Design Features and Performance Characteristics for Major Steam and Power Conversion System Components

Nuclear Steam Supply System, Full Power Operation	
Rated NSSS power (MWt)	3415
Steam generator outlet pressure (psig)	821
Steam generator inlet feedwater temperature (°F)	440
Maximum steam generator separator outlet steam moisture (%)	0.25
Steam generator outlet steam temperature (°F)	523
Quantity of steam generators	2
Flow rate per steam generator (lb/hr)	7.49×10^6
Turbine	
Nominal output (kW)	1,199,500
Turbine type	Tandem-compound 6-flow, 52 in. last-stage blade
Turbine elements	1 high pressure 3 low pressure
Operating speed (rpm)	1800

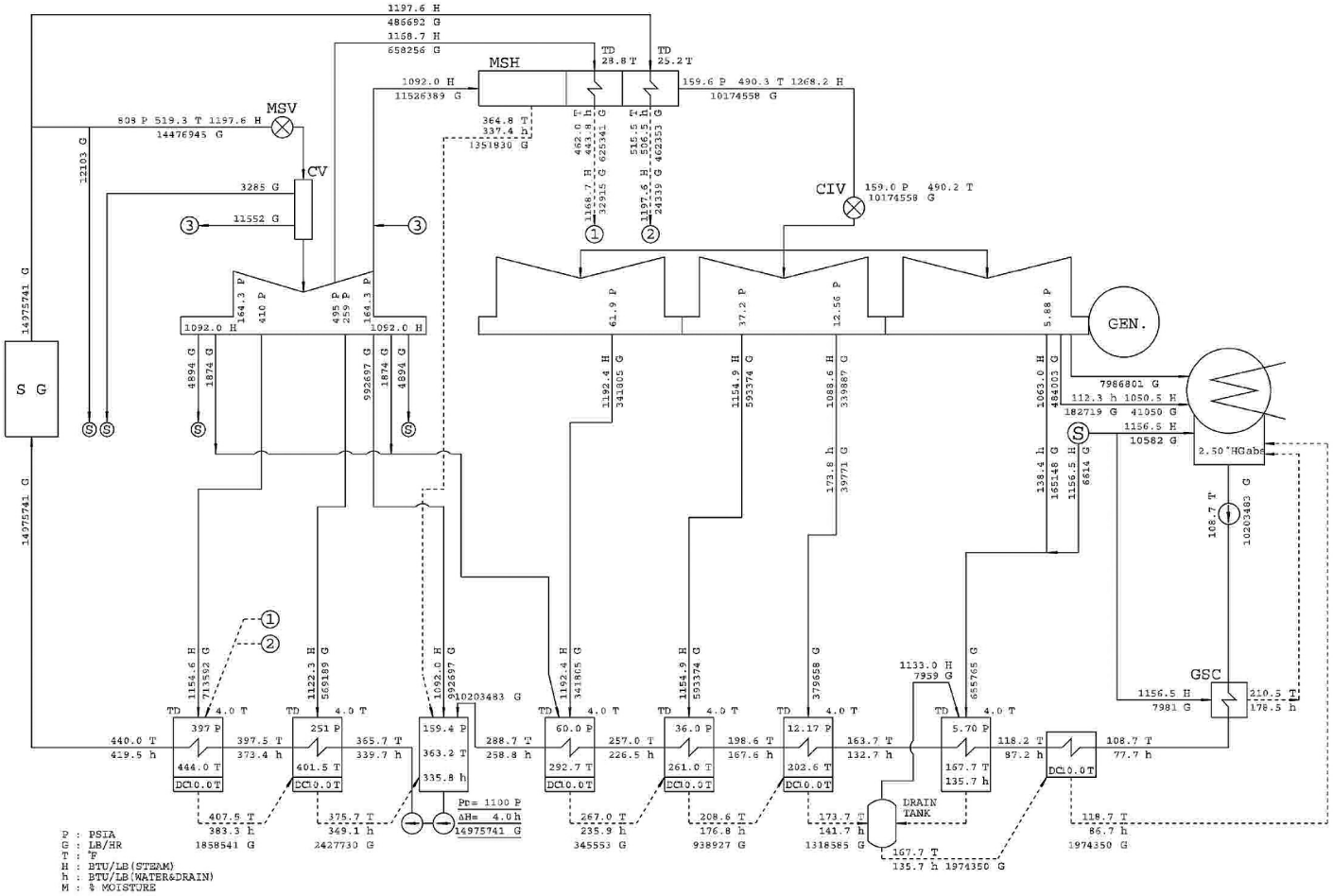

Figure 10.1-1
Rated Heat Balance

10.2 Turbine-Generator

The function of the turbine-generator is to convert thermal energy into electric power.

10.2.1 Design Basis

10.2.1.1 Safety Design Basis

The turbine-generator serves no safety-related function and therefore has no nuclear safety design basis.

10.2.1.2 Power Generation Design Basis

The following is a list of the principal design features:

- The turbine-generator is designed for baseload operation and for load follow operation.
- The main turbine system (MTS) is designed for electric power production consistent with the capability of the reactor and the reactor coolant system.
- The turbine-generator is designed to trip automatically under abnormal conditions.
- The system is designed to provide proper drainage of related piping and components to prevent water induction into the main turbine.
- The main turbine system satisfies the recommendations of Nuclear Regulatory Commission Branch Technical Position ASB 3-1 as related to breaks in high-energy and moderate-energy piping systems outside containment. The main turbine system is considered a high-energy system.
- The system provides extraction steam for seven stages of regenerative feedwater heating.

10.2.2 System Description

The turbine-generator is designated as a TC6F 52-inch last-stage blade unit consisting of turbines, a generator, external moisture separator/reheaters, controls, and auxiliary subsystems. (See Figure 10.2-1.) The major design parameters of the turbine-generator and auxiliaries are presented in Table 10.2-1. The piping and instrumentation diagram containing the stop, control, intercept, and reheat valves is shown in Figure 10.3.2-2.

The turbine-generator and associated piping, valves, and controls are located completely within the turbine building. There are no safety-related systems or components located within the turbine building. The probability of destructive overspeed condition and missile generation, assuming the recommended inspection and test frequencies, is less than 1×10^{-5} per year. In addition, orientation of the turbine-generator is such that a high-energy missile would be directed at a 90 degree angle away from safety-related structures, systems, or components. Failure of turbine-generator equipment does not preclude safe shutdown of the reactor. The turbine-generator components and instrumentation associated with turbine-generator overspeed protection are accessible under operating conditions. Subsection 3.5.1.3 addresses the probability of generation of a turbine missile for AP1000 plants in a side-by-side configuration.

Preoperational and startup tests provide guidance to operations personnel to ensure the proper operability of the turbine generator system.

10.2.2.1 Turbine-Generator Description

The turbine is a 1800-rpm, tandem-compound, six-flow, reheat unit with 52-inch last-stage blades (TC6F 52-inch LSB). The high-pressure turbine element includes one double-flow, high-pressure turbine. The low-pressure turbine elements include three double-flow, low-pressure turbines and two external moisture separator/reheaters (MSRs) with two stages of reheating. The single direct-driven generator is hydrogen gas and de-ionized water cooled and rated at 1375 MVA at 0.90 PF. Other related system components include a complete turbine-generator bearing lubrication oil system, a digital electrohydraulic (D-EHC) control system with supervisory instrumentation, a turbine steam sealing system (refer to Subsection 10.4.3), overspeed protective devices, turning gear, a stator cooling water system, a generator hydrogen and seal oil system, a generator CO_2 system, a rectifier section, an excitation transformer, and a voltage regulator.

The turbine-generator foundation is a spring-mounted support system. A spring-mounted turbine-generator provides a low-tuned, turbine-pedestal foundation. The springs dynamically isolate the turbine-generator deck from the remainder of the structure in the range of operating frequencies, thus allowing for an integrated structure below the turbine deck. The condenser is supported on springs and attached rigidly to the low-pressure turbine exhausts.

The foundation design consists of a reinforced concrete deck mounted on springs and supported on a structural steel frame that forms an integral part of the turbine building structural system. The lateral bracing under the turbine-generator deck also serves to brace the building frame. This "integrated" design reduces the bracing and number of columns required in the building. Additionally, the spring-mounted design allows for dynamic uncoupling of the turbine-generator foundation from the substructure. The spring mounted support system is much less site dependent than other turbine pedestal designs, since the soil structure is decoupled from turbine dynamic effects. The turbine-generator foundation consists of a concrete table top while the substructure consists of supporting beams and columns. The structure below the springs is designed independent of vibration considerations. The turbine-generator foundation and equipment anchorage are designed to the same seismic design requirement as the turbine building. See Subsection 3.7.2.8 for additional information on seismic design requirements. See Subsection 10.4.1.2 for a description of the support of the condenser.

10.2.2.2 Turbine-Generator Cycle Description

Steam from each of two steam generators enters the high-pressure turbine through four stop valves and four governing control valves; each stop valve is in series with one control valve. Crossties are provided upstream of the turbine stop valves to provide pressure equalization with one or more stop valves closed. After expanding through the high-pressure turbine, exhaust steam flows through two external moisture separator/reheater vessels. The external moisture separators reduce the moisture content of the high-pressure exhaust steam from approximately 10 to 13 percent at the rated load to 0.5 percent moisture or less.

The AP1000 employs a 2 stage reheater, of which the first stage reheater uses the extraction steam from the high pressure turbine and the second reheater uses a portion of the main steam supply to reheat the steam to superheated conditions. The reheated steam flows through separate reheat stop and intercept valves in each of six reheat steam lines leading to the inlets of the three low-pressure turbines. Turbine steam extraction connections are provided for seven stages of feedwater heating. Steam from the extraction points of the high-pressure turbine is supplied to high-pressure feedwater heater No. 6 and No. 7. The high-pressure turbine exhaust also supplies steam to the deaerating feedwater heater. The low-pressure turbine third, fourth, fifth, and sixth extraction points supply steam to the low-pressure feedwater heaters No. 4, 3, 2, and 1, respectively.

Moisture is removed at a number of locations in the blade path. The no-return drain catchers provided at the nozzle diaphragms (stationary blade rings) accumulate the water fraction of the wet steam, and the accumulated water discharges into each extract, reheat, and exhaust lines directly or through drainage holes drilled through the nozzle diaphragms. A few grooves are provided on the rotating blades near the last stage of the low-pressure turbine to capture the large water droplets of the wet steam and to enhance the moisture removal effectiveness.

The external moisture separator/reheaters use multiple vane chevron banks (shell side) for moisture removal. The moisture removed by the external moisture separator/reheaters drain to a moisture separator drain tank and is pumped to the deaerator.

Condensed steam in the reheater (tube side) is drained to the reheater drain tank, flows into the shell side of the No. 7 feedwater heater, and cascades to the No. 6 feedwater heater.

10.2.2.3 Excitation System

The excitation system is a static excitation system using the thyristor full bridge rectifier.

Excitation power used in this system is fed from the generator main lead through the excitation transformer. The excitation transformer is of outdoor use type, and it will be located adjacent to the turbine building. After stepping down the voltage at the excitation transformer, ac current from the generator main lead will be rectified by the thyristor rectifier.

The voltage control system uses the digital controller for major control function. The system has two master controller configurations (i.e., one is for normal operation and the other is stand-by). The voltage setting range of the automatic voltage regulator is +/-10% of the generator rated voltage; however, the operating range of the generator is +/-5% of the generator rated voltage. The excitation system will include a power system stabilizer. The standard type power system stabilizer is single input type, using the generator output power deviation as the input signal.

10.2.2.4 Digital Electrohydraulic System Description

The turbine-generator is equipped with a digital electrohydraulic (D-EHC) system that combines the capabilities of redundant processors and high-pressure hydraulics to regulate steam flow through the turbine. The control system provides the functions of speed control, load control, overspeed protection, and automatic turbine control (ATC), which may be used, either for control or for supervisory purposes, at the option of the plant operator.

The D-EHC system employs three electric speed inputs whose signals are processed in redundant processors. Valve opening actuation is provided by a hydraulic system that is independent of the bearing lubrication system. Valve closing actuation is provided by springs and steam forces upon reduction or relief of fluid pressure. The system is designed so that loss of fluid pressure, for any reason, leads to valve closing and consequent turbine trip.

Steam valves are provided in an in-line configuration. The stop valves are tripped by the overspeed trip system; the control valves are modulated by the control system and are also actuated by the trip system.

10.2.2.4.1 Speed Control (Normal Turbine Operation)

Three active speed sensors provide signals for the turbine rotation rate. These are the 3 probes A,B,C shown on Figure 10.2-2. The 3 signals are input to 3 separate speed detection modules each located on three separate I/O branches. Each of these modules has an onboard microprocessor which converts the sensor input to a turbine rpm value.

Independence of the three speed sensor signal branches is assured in that failure of the transmission of one branch of the signal does not affect the transmission of the signal in the other two branches. Each I/O branch is separately fused and fed by redundant power sources. Also, failure of a speed detection module (receiving one branch of the signal) does not affect the function of the remaining two speed detection modules from receiving their signals.

The speed control function of the turbine control and protection system's redundant controller provides speed control and acceleration functions for normal turbine operation. The speed error signal is derived by comparing the desired setpoint speed with the actual speed of the turbine. This error drives an algorithm that positions the control valves at the desired setpoint. Acceleration rates can also be entered by the operator or calculated by the control system in the auto start-up mode. A failure of one speed input generates an alarm. Failure of two or more speed inputs also generates an alarm and trips the turbine. In addition, if both of the Ovation controllers fail or power to them is lost, the turbine will trip. The design is fail safe; the system is designed to de-energize to trip.

The speed control function exists in triplicate channels, which include the load (frequency) control function if the main generator breaker is closed. If one channel fails, the lower signal of the remaining two channels is selected by the median value gate (MVG) and fed into the valve positioning control function.

The control system's operator automatic (OA) controller provides the speed control function. At 101% of rated speed, the control valves and intercept valves begin to close, but do not trip the turbine.

The speed control function is designed to prevent the operator from holding the turbine speed at a bearing critical or blade resonance point.

10.2.2.4.2 Load Control

The load control function of the turbine control and protection system's OA controller develops signals that are used to regulate unit load. Signal outputs are based on a proper combination of the speed error and megawatt setpoints to generate a flow demand to the control valves.

When the first-stage pressure and megawatt control loops are out of service, steam flow is not controlled by feedback, but rather by a characterization of maximum nozzle flow (at rated pressure and temperature) per valve versus control valve position. Under this condition, the turbine operator requests a certain megawatt load target. The control system calculates the required flow demand to adjust the steam flow from the steam generators supplied to the turbine.

10.2.2.4.3 Valve Control

The flow of the main steam entering the high-pressure turbine is controlled by four stop valves and four control valves. The function of the stop valves is to shut off the steam flow to the turbine when required. The stop valves are closed by actuation of the overspeed trip system. This system is independent of the control system. Stop valves No. 1 and No. 3 are controlled by a hydraulic actuator so that the stop valve is either fully open or fully closed. The No. 2 and No. 4 stop valves each has a bypass valve, which is controlled by an electro-hydraulic servo actuator for control valve warming.

The turbine control valves are positioned by electrohydraulic servo actuators in response to signals from their respective servo modules. The servo module signal positions the control valves for wide-range speed control through the normal turbine operating range, and for load control after the turbine-generator unit is synchronized.

The reheat stop and intercept valves, located in the hot reheat lines at the inlet to the low-pressure turbines, control steam flow to the low-pressure turbines. During normal operation of the turbine, the

reheat stop valves open under hydraulics control. The intercept valve independent servo module positions valves Nos. 1, 3, and 5 during startup and normal operation. Intercept valves Nos. 2, 4, and 6 open under hydraulics control. The intercept valves close rapidly on loss of turbine load. The reheat stop and intercept valves close completely on a turbine trip.

The control, stop, reheat stop, and intercept valves have fast-acting valves connected to the hydraulic portion of their respective valve actuators. Opening a fast-acting valve causes the connected control or stop valve to rapidly close. The fast-acting valve actuators are connected to trip headers and open in response to loss of pressure in the connected trip header. The control and intercept fast-acting valves are connected to the relay trip header, and reheat stop dump valves are connected to the auto stop emergency trip header. Valve closure times are provided in Table 10.2-4.

10.2.2.4.4 Power/Load Unbalance (Main Breaker Closed)

A power/load unbalance circuit initiates fast closing intercept valve action under load rejection conditions that might lead to rapid rotor acceleration and consequent overspeed.

Load unbalance operates when load is equal to or greater than 40% of full load and reheat pressure exceeds the corresponding expected megawatts. Cold reheat pressure is used as a measure of power. Generator current is used as a measure of load to provide discrimination between loss of load incidents and occurrences of electric system faults. This causes all intercept valves to close quickly under fast-acting solenoid valve action.

When the circuitry detects a power/load unbalance condition, an intercept valve trigger function is provided, which initiates closure of the intercept valves by energizing fast-acting solenoid valves on the intercept valve actuators. One-half of the intercept valves are “controlling” and are equipped with a servo valve. The “controlling” intercept valves allow recovery from a partial load rejection by blowing down the bypass system. Simultaneously, the load reference signal is set to zero. Should the condition disappear quickly, the power/load unbalance circuitry resets automatically and the load reference signal is recalculated based on the new calculation of flow demand.

10.2.2.4.5 Overspeed Protection

The turbine control and protection system has four functions to protect the turbine against overspeed. The first is the overspeed protection system (OSP), which at 101% of rated speed, begins to close the control and intercept valves as discussed in Subsection 10.2.2.4.1. The second and third are the 110% and 111% overspeed trip functions also discussed in Subsection 10.2.2.5. The fourth function is the partial load unbalance discussed in Subsection 10.2.2.4.4.

Redundancy is built into the overspeed protection system. The failure of a single valve will not disable the trip functions. The overspeed protection components are designed to fail in a safe position. Loss of the hydraulic pressure in the emergency trip system causes a turbine trip. Therefore, damage to the overspeed protection components, results in the closure of the valves and the interruption of steam flow to the turbine.

Quick closure of the steam valves prevents turbine overspeed. Valve closing times are given in Table 10.2-4.

10.2.2.4.6 Automatic Turbine Control

Automatic turbine control provides safe and proper startup and loading of the turbine generator. The applicable limits and precautions are monitored by the automatic turbine control programs even if the automatic turbine control mode has not been selected by the operator. When the operator selects automatic turbine control, the programs both monitor and control the turbine. The D-EHC controller

takes advantage of the capability of the control system to scan, calculate, make decisions, and take positive action.

The automatic turbine control is capable of automatically:

- Changing speed reference
- Changing acceleration rates
- Generating speed holds
- Changing load rates
- Generating load holds

The thermal stresses in the rotor are calculated by the automatic turbine controls programs based on actual turbine steam and metal temperatures as measured by thermocouples or other temperature measuring devices. Once the thermal stress (or strain) is calculated, it is compared with the allowable value, and the difference is used as the index of the permissible first stage temperature variation. This permissible temperature variation is translated in the computer program as an allowable speed or load or rate of change of speed or load.

Values of some parameters are stored for use in the prediction of their future values or rates of change, which are used to initiate corrective measures before alarm or trip points are reached.

The rotor stress (or strain) calculations used in the program, and its decision-making counterpart are the main controlling sections. They allow the unit to roll with relatively high acceleration until the anticipated value of stress predicts that limiting values are about to be reached. Then a lower acceleration value is selected and, if the condition persists, a speed hold is generated. The same philosophy is used on load control in order to maintain positive control of the loading rates.

The automatic turbine controls programs are stored and executed in redundant distributed processing units, which contain the rotor stress programs and the automatic turbine controls logic programs. Once the turbine is reset, the automatic turbine controls programs are capable of rolling the turbine from turning gear to synchronous speed.

Once the turbine-generator reaches synchronous speed, the startup or speed control phase of automatic turbine control is completed and no further action is taken by the programs. Upon closing the main generator breaker, the D-EHC automatically picks up approximately 5 percent of rated load to prevent motoring of the generator. At this time, the D-EHC is in load control logic and automatically reverts control to the operator mode.

The operator can also select the automatic turbine control mode. The automatic turbine control selects the loading rate (based on turbine temperature) and allows load changes until an alarm condition occurs. If the operating parameters being monitored (including rotor stress) exceed their associated alarm limit, a load hold is generated in conjunction with the appropriate alarm message. The D-EHC generates the load hold by ignoring any further load increase or decrease until the alarm condition is cleared or until the operator overrides the alarm condition.

The operator may remove the turbine-generator from automatic turbine control. This action places the turbine control in operator auto mode and the automatic turbine control in a supervisory capacity.

10.2.2.5 Turbine Protective Trips

Turbine protective trips, when initiated, cause tripping of the main stop, control, intercept, and reheat stop valves. The protective trips are:

- Low bearing oil pressure

- Low electrohydraulic fluid pressure
- High condenser back pressure
- Turbine overspeed
- Thrust bearing wear
- Remote trip that accepts external trips

A description of the trip system for turbine overspeed is provided below.

10.2.2.5.1 Overspeed Trip System

The purpose of the electrical overspeed trip system is to detect undesirable operating conditions of the turbine-generator, take appropriate trip actions, and provide information to the operator about the detected conditions and the corrective actions. In addition, means are provided for testing emergency trip equipment and circuits.

The system hydraulic manifold configuration permits on line testing with continuous protection afforded during the test sequence.

The trip system includes an online testable hydraulic manifold, speed sensors, trip relays, independent power supplies, and a test graphic. These items and the function of the overspeed trips are described in the following three subsystems.

10.2.2.5.2 Emergency Trip Block/Master Trip Device

The emergency trip supply pressure is established when the master trip solenoid valves are closed. The valves are arranged in two channels for testing purposes. Both valves in a channel will open to trip that channel. Both channels must trip before the emergency trip supply pressure collapses to close the turbine steam inlet valves. Each tripping function of the electrical emergency trip system can be individually tested from the operator/test graphic without tripping the turbine by separately testing each channel of the appropriate trip function. The solenoid valves may be individually tested.

The emergency trip system opens a drain path for the hydraulic fluid in the emergency trip supply. The loss of fluid pressure in the trip header will cause the main stop and reheat stop valves to close. Also, a relay trip valve in the connection to the emergency trip supply opens to drop the pressure in the relay emergency trip supply and cause the control and intercept valves to close. The control and intercept valves are redundant to the main stop and reheat stop valves respectively.

10.2.2.5.3 Overspeed Trip Functions and Mechanisms

The overspeed trips for the AP1000 turbine consist of a diverse 110% trip in the emergency trip system (ETS) and a 111% backup trip using three Ovation speed detection modules independent of the OA controller described in Subsection 10.2.4.4.1 (see also Figure 10.2-2). The overspeed trip setpoints are identified in Table 10.2-2. The overspeed protection system will function for all abnormal conditions, including a single failure of any component or subsystem.

The 110% trip is implemented electronically rather than mechanically as indicated in the review procedure in SRP 10.2, Part III-2-C. An independent and redundant backup electrical overspeed trip circuit senses the turbine speed by magnetic pickup and closes all valves associated with speed control at approximately 111% of rated speed.

The diverse 110% ETS trip system has triplicated passive speed sensors separate from the triplicated active speed sensors used in the backup 111% trip. Both trip functions use solenoid valves to drain the emergency trip hydraulic supply. The hydraulic fluid in the trip and overspeed protection

control headers is independent of the bearing lubrication system to minimize the potential for contamination of the fluid.

The diverse 110% ETS overspeed trip system, combined with the 111% overspeed protection function of the turbine control system, provide a level of redundancy and diversity at least equivalent to the recommendations for turbine overspeed protection found in III.2 of Standard Review Plan (NUREG-0800) Section 10.2. The control signals from the two turbine-generator overspeed trip systems are isolated from, and independent of, each other. Each trip is initiated electrically in separate systems. The 110% and 111% trip systems have diverse hardware and software/firmware to eliminate common cause failures (CCFs) from rendering the trip functions inoperable. Additionally, the issues and problems with overspeed protection systems identified in NUREG-1275 (Reference 3) have been addressed.

The turbine rpm signals discussed in Subsection 10.2.2.4.1 are also used by redundant Ovation controllers for normal speed and load control functions (SRP 10.2 Part III.2.B). The rpm signals are also monitored by a setpoint on each of the speed detection modules to support the backup overspeed trip at 111% overspeed (Part III.2.D). When the rpm speed reaches the backup turbine overspeed trip setpoint, the microprocessor on each speed detection module issues a trip command to the onboard relay. When at least two out of three channels indicate a trip, a trip signal is sent to the turbine.

Independence of the electrohydraulic control system of SRP 10.2 Part III.2.B and the backup electrical overspeed trip circuit of Part III.2.D is assured in that failure of the Ovation controllers does not affect the ability of the speed detection module to trip the turbine at the backup turbine overspeed trip setpoint. Although the electrohydraulic control system and the backup electrical overspeed trip circuit are located in the same cabinet, common failure modes have been addressed to ensure the 111% overspeed trip function in SRP 10.2 Part III.2.D cannot be rendered inoperable or affected by the failure of the Ovation controllers. The control system also has diagnostic capabilities to provide information to the operator in the main control room in case of other failures or problems in the system or its components.

10.2.2.5.4 Trip Instrumentation

Low bearing oil pressure, low electrohydraulic fluid pressure, and high condenser back pressure are each sensed by separate instrumentation. Each assembly consists of triplicate pressure transmitters with instrument valves. Each assembly is arranged into three channels.

If two of the three signals (pressure or vacuum) reach a trip setpoint, then the pressure sensors cause the master trip device to operate.

The trip function can be checked by a test device that simulates pressure to activate the trip outputs from the modules.

10.2.2.5.5 Thrust Bearing Trip Device

Two position pickups, which are part of the turbine supervisory instrument package, monitor movement of a disc mounted on the rotor near the thrust bearing collar. Axial movement of this collar is reflected in movement of the disc. Excessive movement of the disc is an indication of thrust bearing wear. Should excessive movement occur, relay contacts from the supervisory instrument modules close to initiate a turbine trip.

The thrust bearing trip function can be checked by a test device that simulates movement of the rotor to activate the trip outputs from the modules.

10.2.2.5.6 Remote Trip

The emergency trip system also has provisions to trip the turbine in response to a signal from the plant control system or plant safety and monitoring system.

10.2.2.6 Other Protective Systems

Additional protective features of the turbine and steam system are:

- Moisture separator reheater safety relief valves
- Rupture diaphragms located on each of the low-pressure turbine cylinder covers
- Turbine water induction protection systems on the extraction steam lines

10.2.2.7 Plant Loading and Load Following

The AP1000 turbine-generator control system and control strategy has the same loading and load following characteristics as the control system described in Section 7.7. In addition, the turbine-generator has the following capabilities:

- Daily load change between 100 and 30 percent of rated power
- Transition between baseload and load follow operation
- Extended weekend reduced power operation
- Rapid return to up to 90 percent of rated power

For the AP1000, this load following capability is maintained for most of cycle life.

10.2.2.8 Inspection and Testing Requirements

Major system components are readily accessible for inspection and are available for testing during normal plant operation. Turbine trip circuitry is tested prior to unit startup.

10.2.3 Turbine Rotor Integrity

Turbine rotor integrity is provided by the integrated combination of material selection, rotor design, fracture toughness requirements, tests, and inspections. This combination results in a very low probability of a condition that could result in a rotor failure.

Operations and maintenance procedures mitigate the following potential degradation mechanisms in the turbine rotor and buckets/blades: pitting, stress corrosion cracking, corrosion fatigue, low-cycle fatigue, erosion, and erosion-corrosion.

10.2.3.1 Materials Selection

Fully integral turbine rotors are made from ladle refined, vacuum deoxidized, Ni-Cr-Mo-V alloy steel by processes which maximize steel cleanliness and provide high toughness. Residual elements are controlled to the lowest practical concentrations consistent with melting practices. The chemical property limits of ASTM A470, Classes 5, 6, and 7 are the basis for the material requirements for the turbine rotors. The specification for rotor steel used in the AP1000 has lower limitations than indicated in the ASTM standard for phosphorous, sulphur, aluminum, antimony, tin, argon, and copper. This material has the lowest fracture appearance transitions temperatures (FATT) and the highest Charpy V-notch energies obtainable on a consistent basis from water-quenched Ni-Cr-Mo-V material at the sizes and strength levels used. Charpy tests and tensile tests in accordance with American Society of Testing and Materials (ASTM) specification A370 are required from the forging supplier.

The production of steel for the turbine rotors starts with the use of high-quality, low residual element scrap. An oxidizing electric furnace is used to melt and dephosphorize the steel. Ladle furnace refining is then used to remove oxygen, sulphur, and hydrogen from the rotor steel. The steel is then further degassed using a process whereby steel is poured into a mold under vacuum to produce an ingot with the desired material properties. This process minimizes the degree of chemical segregation since silicon is not used to deoxidize the steel.

10.2.3.2 Fracture Toughness

Suitable material toughness is obtained through the use of materials described in Subsection 10.2.3.1 to produce a balance of material strength and toughness to provide safety while simultaneously providing high reliability, availability, and efficiency during operation. The restrictions on phosphorous, sulphur, aluminum, antimony, tin, argon, and copper in the specification for the rotor steel provides for the appropriate balance of material strength and toughness. The impact energy and transition temperature requirements are more rigorous than those given in ASTM 470 Class 6 or 7.

Bore stress calculations include components due to centrifugal loads and thermal gradients where applicable. Fracture toughness will be at least $220\,\mathrm{MPa} \bullet \sqrt{\mathrm{m}} = 200\,\mathrm{ksi} \bullet \sqrt{\mathrm{in}}$ and the ratio of fracture toughness to the maximum applied stress intensity factor for rotors at speeds from normal to design overspeed will be at least 2. Material fracture toughness needed to maintain this ratio is verified by mechanical property tests on material taken from the rotor.

The rotor is evaluated for fracture toughness by criteria that include the design duty cycle stresses, number of cycles, ultrasonic examination capability and growth rate of potential flaws. Conservative factors of safety are included for the size uncertainty of potential or reported ultrasonic indications, rate of flaw growth (da/dN versus dK) and the duty cycle stresses and number.

Reported rotor forging indications are adjusted for size uncertainty and interaction. A rotor forging with a reported indication that would grow to critical size in the applicable duty cycles is not accepted. The combined rotation and maximum transient thermal stresses used in the applicable duty cycles are based on the brittle fracture and rotor fatigue analyses described below.

Maximum transient thermal stresses are determined from historical maximum loading rates for nuclear service rotors.

10.2.3.2.1 Brittle Fracture Analysis

A brittle fracture analysis is performed on the turbine rotor to provide confidence that small flaws in the rotor, especially near the centerline, do not grow to a critical size with unstable growth resulting in a rotor burst. The brittle fracture analysis process includes determining the stresses in the rotor resulting from rotation, steady-state thermal loads, and transient thermal loads from startup and load change. These stresses are combined to generate the maximum stresses and locations of maximum stress for the startup and load change transients. A fracture mechanics analysis is performed at the location(s) of maximum stress to verify that an initial flaw, equal to the minimum reportable size, will not grow to critical crack size over the life of the rotor under the cumulative effects of startup and load change transients.

A fracture mechanics analysis is done at the location(s) of maximum stress to determine the critical crack size and the initial flaw area that would just grow to the critical size when subjected to the number of startup and load change cycles determined to represent the lifetime of the rotor. This initial flaw area is divided by a factor of safety to generate an allowable initial flaw area. The minimum reportable flaw size is multiplied by a conservative factor to correct for the imperfect nature of a flaw as an ultrasonic reflector, as compared to the calibration reflector. The resulting area is the corrected

flaw area. For an acceptable design, the allowable initial flaw area must be greater than or equal to the corrected flaw area.

A flaw is assumed to be an internal elliptical crack on the centerline for rotors without bores. For rotor contour or for flaws near the rotor bore (for bored rotors), a surface connected elliptical crack is assumed. Flaw analysis is done assuming various flaw aspect ratios and the most conservative results are used. The flaw is assumed to be orientated normal to the maximum principle stress direction.

The beginning-of-life fracture appearance transition temperature for the high pressure and low pressure rotor is specified in the material specification for the specific material alloy selected. Both the high pressure and low pressure turbines operate at a temperature at which temperature embrittlement is insignificant. The beginning-of-life fracture appearance transition temperature is not expected to shift during the life of the rotor due to temperature embrittlement.

Minimum material toughness is provided in the turbine rotors by specification of maximum fracture appearance transition temperature and minimum upper shelf impact energy for the specific material alloy selected. There is not a separate material toughness (K_{IC}) requirement for AP1000 rotors.

10.2.3.2.2 Rotor Fatigue Analysis

A fatigue analysis is performed for the turbine rotors to show that the cumulative usage is acceptable for expected transient conditions including normal plant startups, load following cycling, and other load changes. The fatigue design curves are based on mean values of fatigue test data. Margin is provided by assuming a conservatively high number of turbine start and stop cycles. The Toshiba-designed turbine rotors in operating nuclear power plants were designed using this methodology and have had no history of fatigue crack initiation due to duty cycles.

In addition to the low cycle fatigue analysis for transient events, an evaluation for high cycle fatigue is performed. This analysis considers loads due to gravity bending, bearing elevation misalignment, control stage partial arc admission bearing reactions, and steady-state unbalance stress. The local alternating stress is calculated at critical rotor locations considering the bending moments due to the loads described above. The maximum alternating stress is less than the smooth bar endurance strength modified by a size factor.

The AP1000 turbine generator is supported by a spring-mounted system to isolate the dynamic behavior of the turbine-generator equipment from the foundation structure. The support system includes a reinforced concrete deck on which the turbine generator is mounted. The deck is sized to maintain the gravity load and misalignment load bending stresses within allowable limits. The evaluation of the loads includes a dynamic analysis of the combined turbine-generator and foundation structure.

10.2.3.3 High Temperature Properties

The operating temperatures of the high-pressure rotors are below the creep rupture range. Creep rupture is, therefore, not considered to be a significant factor in providing rotor integrity over the lifetime of the turbine. Basic data are obtained from laboratory creep rupture tests.

10.2.3.4 Turbine Rotor Design

The turbine assembly is designed to withstand normal conditions and anticipated transients, including those resulting in turbine trip, without loss of structural integrity. The design of the turbine assembly meets the more restrictive of the following criteria:

- The combined stresses of a low-pressure turbine disk at design overspeed due to centrifugal forces, interference fit, and thermal gradients do not exceed 0.75 of the minimum specified yield strength of the material; or,
- The tangential stresses will not cause a flaw, which is twice the corrected ultrasonic examination reportable size, to grow to critical size in the design life of the rotor. This will result in the ratio of fracture toughness to the maximum applied stress intensity factor for the rotor at speeds from normal to design overspeed being at least 2.

The high-pressure turbine has fully integral rotors forged from a single ingot of low alloy steel. This design is inherently less likely to have a failure resulting in a turbine missile than previous designs with shrunk-on discs. A major advantage of the fully integral rotor is the elimination of disc bores and keyways. In the fully integral rotor design, the location of peak stresses is in the lower stress blade fastening areas. This difference results in a substantial reduction of the rotor peak stresses, which in turn reduces the potential for crack initiation. The reduction in peak stress also permits selection of a material with improved ductility, toughness, and resistance to stress corrosion cracking.

The non-bored design of the high-pressure turbine element provides the necessary design margin by virtue of its inherently lower centerline stress. Metallurgical processes permit fabrication of the rotors without a center borehole. The use of solid rotor forgings was qualified by evaluation of the material removed from center-bored rotors for fossil power plants. This evaluation demonstrated that the material at the center of the rotors satisfied the rotor material specification requirements. Forgings for no-bore rotors are provided by suppliers who have been qualified based on bore material performance.

The low-pressure turbine element is a fully integral rotor fabricated from a single forging. There are no keyways, which can be potential locations for stress risers and corrosive contaminate concentration, exposed to a steam environment. The integral disc profiles are carefully designed to limit the surface stress in areas vulnerable to stress corrosion. Surface stress in less than ideal steam environments is limited to less than 50 percent of the yield strength to reduce the chances of stress corrosion as far as practicable.

10.2.3.5 Preservice Tests and Inspections

Preservice inspections for turbine rotors include the following:

- Rotor forgings are rough machined with a minimum stock allowance prior to heat treatment.

- Each rotor forging is subjected to a 100-percent volumetric (ultrasonic) examination. Each finish-machined rotor is subjected to a surface magnetic particle and visual examination. Results of the above examination are evaluated by use of criteria that are more restrictive than those specified for Class 1 components in ASME Code, Section III and V. These criteria include the requirement that subsurface sonic indications are either removed or evaluated to verify that they do not grow to a size which compromises the integrity of the unit during the service life of the unit.

- Finish-machined surfaces are subjected to a magnetic particle examination. No magnetic particle flaw indications are permissible in bores (if present) or other highly stressed regions.

- Each fully bladed turbine rotor assembly is spin tested at 20 percent overspeed, the maximum speed following a load rejection from full load.

Rotor areas which require threaded holes are not subjected to a magnetic particle examination of the threaded hole. The number of threaded holes is minimized, and threaded holes are not located in high stress areas.

10.2.3.6 Maintenance and Inspection Program Plan

The maintenance and inspection program plan for the turbine assembly and valves is based on turbine missile probability calculations, operating experience of similar equipment, and inspection results. The methodology for analysis of the probability of generation of missiles for fully integral rotors was submitted in WCAP-16650-P (Reference 1). The methodology used for analysis of the missile generation probability calculations was used to determine turbine valve test frequency as described in WCAP-16651-P (Reference 2). The maintenance and inspection program includes the activities outlined below:

- Disassembly of the turbine is conducted during plant shutdown. Inspection of parts that are normally inaccessible when the turbine is assembled for operation (couplings, coupling bolts, turbine rotors, and low-pressure turbine blades) is conducted.

  This inspection consists of visual, surface, and volumetric examinations as indicated below:

  – Each rotor and stationary and rotating blade path component is inspected visually and by magnetic particle testing on accessible surfaces. Ultrasonic inspection of the outer dovetail and the bucket pin is conducted. These inspections are conducted at intervals of about 10 years for low-pressure turbines and about 8 years for high-pressure turbines.

  – A 100 percent surface examination of couplings and coupling bolts is performed.

  – Fluorescent penetrant examination is conducted on nonmagnetic components.

- At least one main steam stop valve, one main steam control valve, one reheat stop valve, and one intercept valve are dismantled approximately every 3 years during scheduled refueling or maintenance shutdowns. A visual and surface examination of valve internals is conducted. If unacceptable flaws or excessive corrosion are found in a valve, the other valves of its type are inspected. Valve bushings are inspected and cleaned, and bore diameters are checked for proper clearance.

- Main stop valves, control valves, reheat stop and intercept valves may be tested with the turbine online. The D-EHC control test panel is used to stroke or partially stroke the valves.

- Extraction nonreturn valves are tested prior to each startup.

- Turbine valve testing is performed at six-month intervals. The semi-annual testing frequency is based on nuclear industry experience that turbine-related tests are the most common cause of plant trips at power. Plant trips at power may lead to challenges of the safety-related systems. Evaluations show that the probability of turbine missile generation with a semi-annual valve test is less than the evaluation criteria.

- Extraction nonreturn valves are tested locally by stroking the valve full open with air, then equalizing air pressure, allowing the spring closure mechanism to close the valve. Closure of each valve is verified by direct observation of the valve arm movement.

The valve inspection frequency of three years noted above is consistent with an 18-month fuel cycle for AP1000 and is based on evaluations performed to support this valve inspection interval at operating plants with 18-month fuel cycles. A monitoring program is in place at operating nuclear power plants to verify the success of longer valve inspection intervals. A recommendation for a valve inspection frequency longer than three years may be justified when a longer interval is supported by operating and inspection program experience and supported by the missile generation probability calculations.

The inservice inspection (ISI) program for the turbine assembly provides assurance that rotor flaws that lead to brittle fracture of a rotor are detected. The ISI program also coincides with the ISI schedule during shutdown, as required by the ASME Boiler and Pressure Vessel Code, Section XI, and includes complete inspection of all significant turbine components, such as couplings, coupling bolts, turbine shafts, low-pressure turbine blades, low-pressure rotors, and high-pressure rotors. This inspection consists of visual, surface, and volumetric examinations required by the code.

10.2.4 Evaluation

Components of the turbine-generator are conventional and typical of those which have been extensively used in other nuclear power plants. Instruments, controls, and protective devices are provided to confirm reliable and safe operation. Redundant, fast actuating controls are installed to prevent damage resulting from overspeed and/or full-load rejection. The control system initiates a turbine trip upon reactor trip. Automatic low-pressure exhaust hood water sprays are provided to prevent excessive hood temperatures. Exhaust casing rupture diaphragms are provided to prevent low-pressure cylinder overpressure in the event of loss of condenser vacuum. The diaphragms are flange mounted and designed to maintain atmospheric pressure within the condenser and turbine exhaust housing while passing full flow.

Since the steam generated in the steam generators is not normally radioactive, no radiation shielding is provided for the turbine-generator and associated components. Radiological considerations do not affect access to system components during normal conditions. In the event of a primary-to-secondary system leak due to a steam generator tube leak, it is possible for the steam to become contaminated. Discussions of the radiological aspects of primary-to-secondary leakage are presented in Chapters 11 and 12.

10.2.5 Instrumentation Applications

The turbine-generator is provided with turbine supervisory instrumentation including monitors for the following:

- Speed
- Stop valve position
- Control valve position
- Reheat intercept and stop valve positions
- Temperatures as required for controlled starting, including:
  - External valve chest inner surface
  - External valve chest outer surface
  - First-stage shell lower inner surface
  - Crossover pipe downstream of reheat stop valve No. 1
  - Crossover pipe downstream of reheat stop valve No. 2
  - Crossover pipe downstream of reheat stop valve No. 3
  - Crossover pipe downstream of reheat stop valve No. 4
  - Crossover pipe downstream of reheat stop valve No. 5
  - Crossover pipe downstream of reheat stop valve No. 6
- Casing and shaft differential expansion
- Vibration of each bearing
- Shaft eccentricity
- Bearing metal temperatures

Alarms are provided for the following abnormal conditions:

- High vibration
- Turbine supervisory instruments common alarm

In addition to the turbine protective trips listed in Subsection 10.2.2.5, the following trips are provided:

- High exhaust hood temperature
- Low emergency trip system pressure
- Low shaft-driven lube oil pump discharge pressure
- High or low level in moisture separator drain tank

Indications of the following miscellaneous parameters are provided:

- Main steam throttle pressure
- Steam seal supply header pressure
- Steam seal condenser vacuum
- Bearing oil header pressure
- Bearing oil coolers coolant temperature
- D-EHC control fluid header pressure
- D-EHC control fluid temperature
- Crossover pressure
- Moisture separator drain tank level
- First-stage pressure
- High-pressure turbine exhaust pressure
- Extraction steam pressure, each extraction point
- Low-pressure turbine exhaust hood pressure
- Exhaust hood temperature for each exhaust

Generator supervisory instruments are provided, with sensors and/or transmitters mounted on the associated equipment. These indicate or record the following:

- Multiple generator stator winding temperatures; the detectors are built into the generator, protected from the cooling medium, and distributed around the circumference in positions having the highest expected temperature

- Stator coil cooling water temperature (one detector per coil)

- Hydrogen cooler inlet gas temperature (two detectors at each point)

- Hydrogen gas pressure

- Hydrogen gas purity

- Generator ampere, voltage, and power

Additional generator protective devices are listed in Table 10.2-3.

10.2.6 Combined License Information on Turbine Maintenance and Inspection

A turbine maintenance and inspection program will be submitted to the NRC staff for review prior to fuel load. The program will be consistent with the maintenance and inspection program plan activities and inspection intervals identified in Subsection 10.2.3.6. Plant-specific turbine rotor test data and calculated toughness curves that support the material property assumptions in the turbine rotor analysis will be available for review after fabrication of the turbine and prior to fuel load.

10.2.7 References

1. WCAP-16650-P, Proprietary and WCAP-16650-NP, Nonproprietary, "Analysis of the Probability of the Generation of Missiles from Fully Integral Nuclear Low Pressure Turbines," Revision 0, February 2007.

2. WCAP-16651-P, Proprietary and WCAP-16651-NP, Nonproprietary, "Probabilistic Evaluation of Turbine Valve Test Frequency," Revision 1, May 2009.

3. NUREG-1275, Vol. 11, Operating Experience Feedback Report - Turbine-Generator Overspeed Protection Systems, Commercial Power Reactors, H. L. Ornstein, Nuclear Regulatory Commission, April 1995.

Table 10.2-1
Turbine-Generator and Auxiliaries Design Parameters

Manufacturer Toshiba	
Turbine	
Type	TC6F 52-in. LSB
No. of elements	1 high pressure; 3 low pressure
Last-stage blade length (in.)	52
Operating speed (rpm)	1800
Condensing pressure (in. HgA)	2.9
Generator	
Generator rated output (kW)	1,237,500
Power factor	0.90
Generator rating (kVA)	1,375,000
Hydrogen pressure (psig)	75
Moisture separator/reheater	
Moisture separator	Chevron vanes
Reheater	U-tube
Number	2 shell
Stages of reheating	2

Table 10.2-2
Turbine Overspeed Protection

Percent of Rated Speed (Approximate)	Event
100	Turbine is initially at valves wide open. Full load is lost. Speed begins to rise. When the breaker opens, the load drop anticipator immediately closes the control and intercept valves if the load at time of separation is greater than 30 percent.
101	Control and intercept valves begin to close.
108	Peak transient speed with normally operating speed control system. If the power/load unbalance and speed control systems had failed prior to loss of load, then:
110	A trip signal is sent by the overspeed trip system to actuate closure of the main stop, control, intercept, and reheat stop valves by releasing the hydraulic fluid pressure in the valve actuators using a two-out-of-three logic system.
111	The emergency electrical overspeed trip system closes the main stop, control, intercept, and reheat stop valves by releasing the hydraulic fluid pressure in the valve actuators using a two-out-of-three trip logic system.

Note:
Following the above sequence of events, the turbine may approach but not exceed 120 percent of rated speed.

Table 10.2-3 (Sheet 1 of 2)
Generator Protective Devices Furnished with the Voltage Regulator Package

Device	Action		
• Generator Minimum Excitation Limiter	Limiter	–	maintains generator reactive power output above certain level (normally steady-state stability limit level)
	Alarm	–	when limiter is limiting
• Generator Maximum Excitation Limiter	Limiter	–	maintains generator field voltage below certain voltage inverse time characteristics
	Alarm	–	when limiter is timing
	Alarm	–	when limiter is limiting
• Generator Overexcitation Protection	Alarm	–	changes the standby controller when overexcitation protection pickup level is exceeded
		–	the system has two master controller configurations; i.e., one is for normal operations and the other is standby
Inverse Timer	Alarm	–	when timing commences
	Regulator trip	–	when timed out
Fixed Timer	Alarm	–	when timing
	Unit trip	–	when timed out
• Generator Volts/Hertz Limiter	Limiter	–	maintains machine terminal volts/Hertz ratio below certain level
	Alarm	–	when limiter is limiting
• Generator Dual Level Volts/Hertz Protection	Alarm	–	when above either preset volts/Hertz level
	Unit trip	–	if timed out at either alarm level
• Generator Automatic Field Ground Detection	Alarm	–	ground
• Regulator Firing Circuit - Loss of Thyristor Firing Pulse Protection	Alarm	–	loss of one firing circuit
	Unit Trip	–	loss of both firing circuits
• Thyristor Blown Fuse Detection	Alarm	–	When one or more thyristor fuses in power drawers open

Table 10.2-3 (Sheet 2 of 2)
Generator Protective Devices Furnished with the Voltage Regulator Package

Device	Action		
• Regulator Forcing Indication	Alarm	–	online forcing
	Alarm	–	offline forcing (blocks "Raise" controls of dc regulator and ac regulator adjusters)
• Regulator Loss of Power Supply (s) Protection	Alarm	–	loss of one power supply
	Unit trip	–	loss of both power supplies
• Regulator Loss of Sensing Protection	Alarm and ac regulator trip	–	when regulator voltage transformer changes the standby controller. The system has two master controller configurations; i.e., one is for normal operation and the other is for standby
• Excitation Supply Breaker	Alarm Excitation trip		
• Power System Stabilizer (PSS) Excessive Output Protection	Alarm Power System Stabilizer trip	–	When PSS output exceeds specified level for specified time
• Power System Stabilizer Inservice Instrumentation Indication	Indicator	–	lamps and contacts
• Generator - Overvoltage Protection	Alarm	–	Phase-back thyristor firing pulses if overvoltage condition persists for a specified time

Table 10.2-4
Turbine-Generator Valve Closure Times

Valve	Closing Time (seconds)
Main Stop Valves	0.3
Control Valves	0.3
Intercept Valves	0.3
Reheat Stop Valves	0.3
Extraction Nonreturn Valves	<1.0

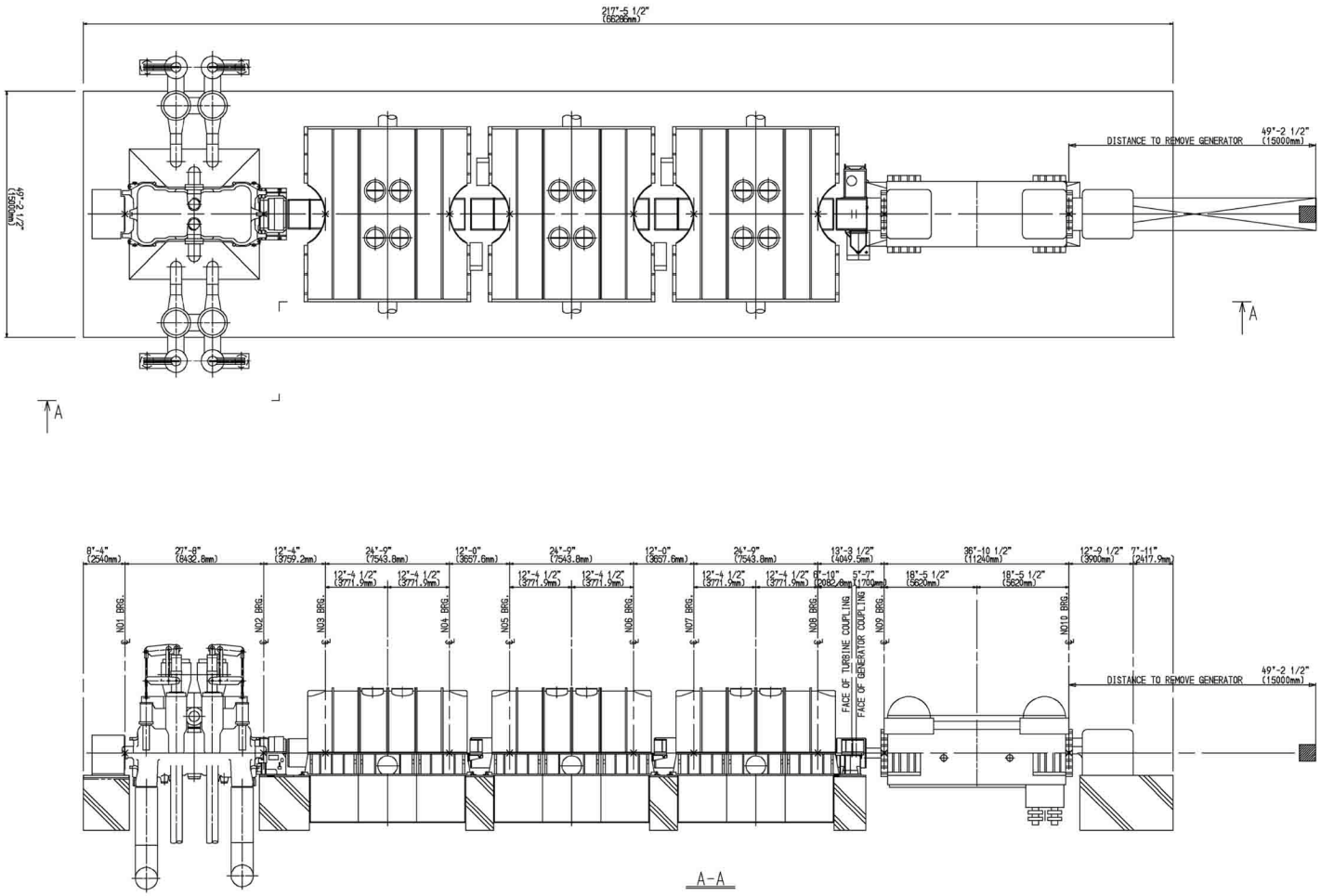

Figure 10.2-1 (Sheet 1 of 2)
Turbine Generator Outline Drawing

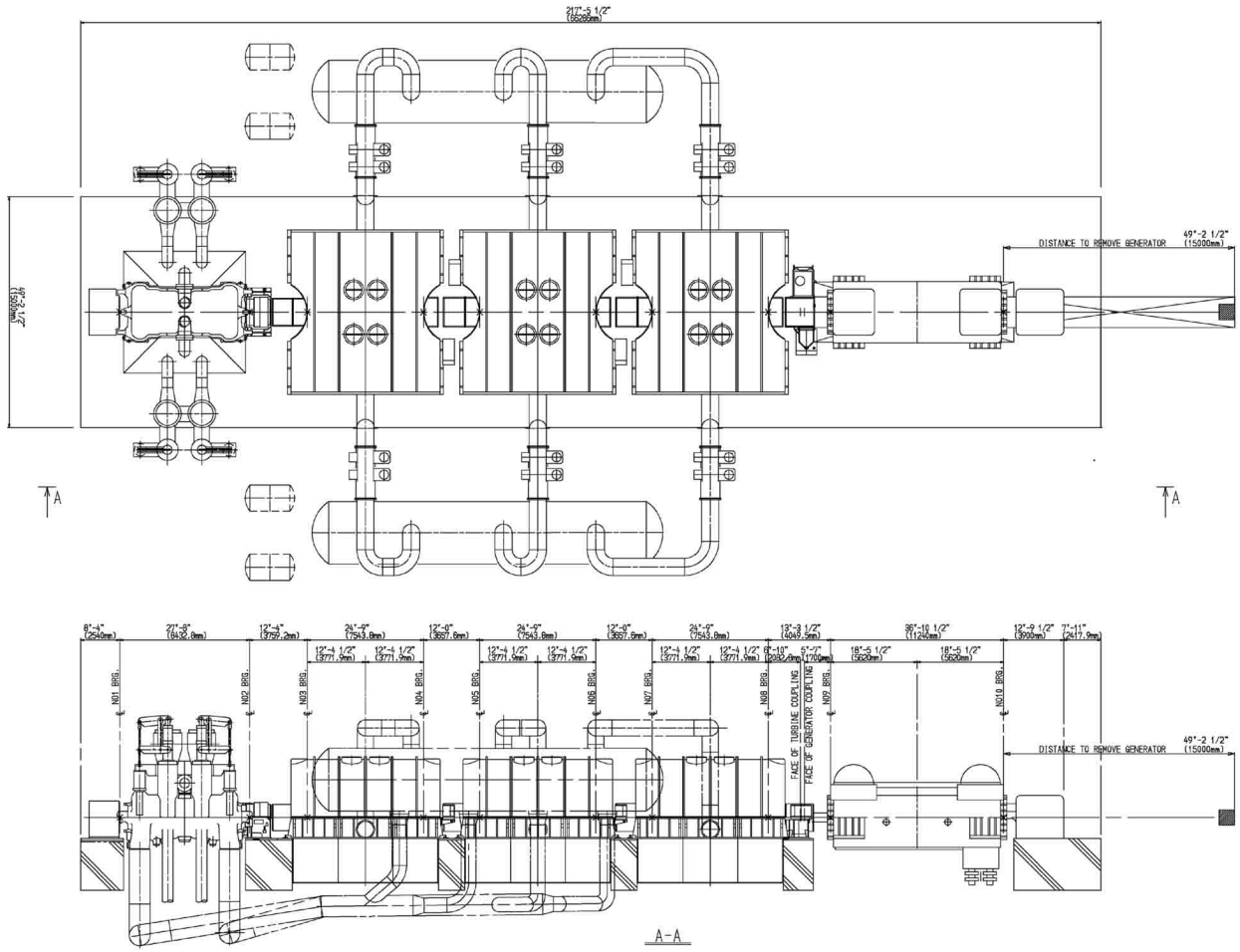

Figure 10.2-1 (Sheet 2 of 2)
Turbine Generator Outline Drawing

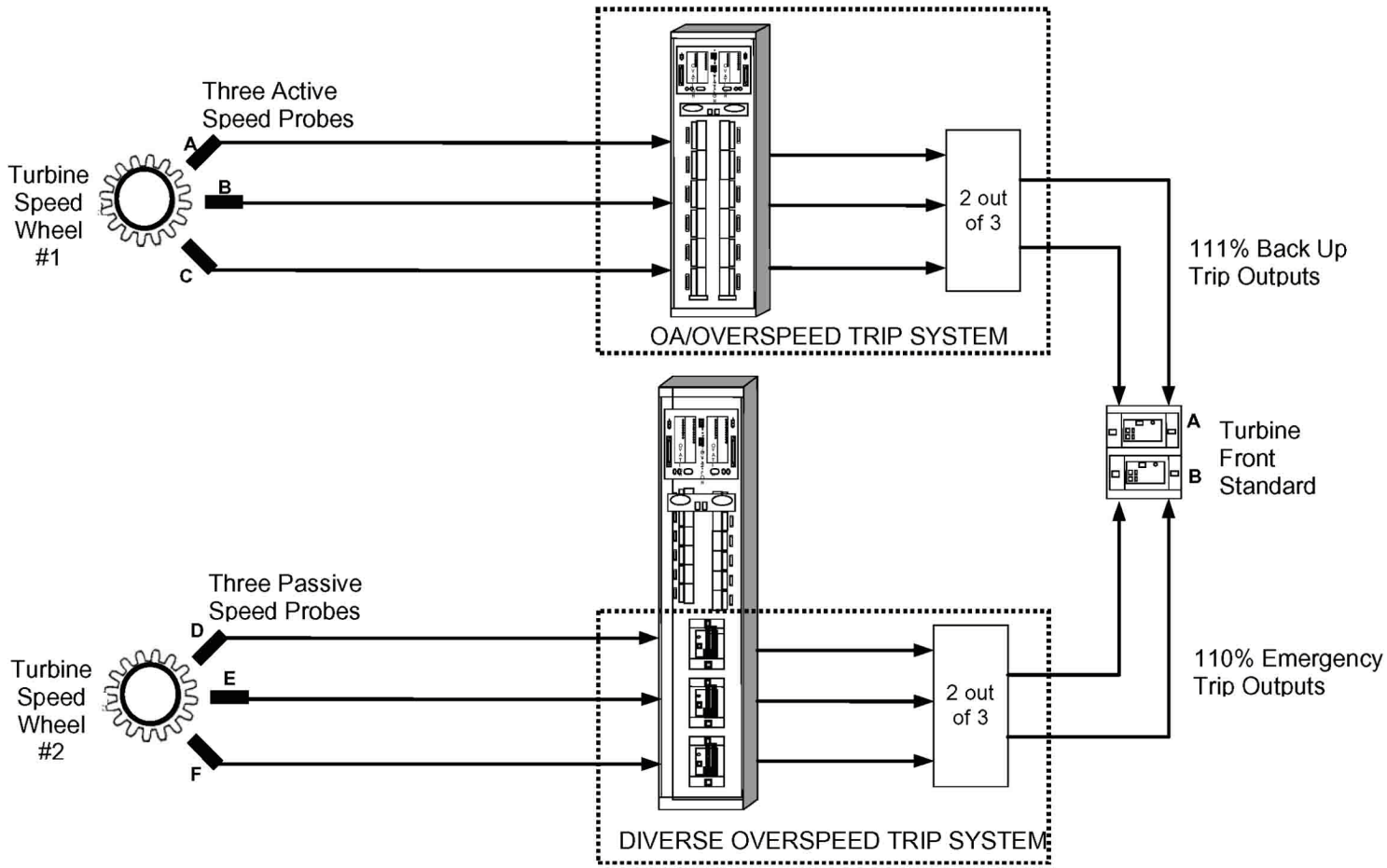

Figure 10.2-2
Emergency Trip System Functional Diagram

10.3 Main Steam Supply System

The main steam supply system as described in this section includes components of the AP1000 steam generator system (SGS), main steam system (MSS), and main turbine system (MTS).

The function of the main steam supply system is to supply steam from the steam generators to the high-pressure turbine over a range of flows and pressures covering the entire operating range from system warmup to maximum calculated turbine conditions.

The system provides steam to the moisture separator/reheaters and the gland seal system for the main turbine. The system dissipates heat generated by the nuclear steam supply system (NSSS) by means of steam dump valves to the condenser or to the atmosphere through power-operated atmospheric relief valves or spring-loaded main steam safety valves when either the turbine-generator or condenser is unavailable.

10.3.1 Design Basis

10.3.1.1 Safety Design Basis

The main steam supply system safety design bases are as follows:

- The system is provided with a main steam isolation valve (MSIV) and associated MSIV bypass valve on each main steam line from its respective steam generator. These valves isolate the secondary side of each of the steam generators to prevent the uncontrolled blowdown of more than one steam generator and isolate nonsafety-related portions of the system.

- Codes and standards utilized in the design of the main steam supply system are identified in Section 3.2, according to the AP1000 equipment class of the component. The main steam supply system contains class B and class C safety-related components.

  Table 3.2-3 identifies the safety-related mechanical equipment in the main steam supply system, and lists the associated ASME code class. (Since all the safety-related components of the main steam supply system are in the AP1000 steam generator system [SGS], they appear in that table with an SGS prefix. For example, the main steam isolation valves [MSIVs] are listed there as SGS-PL-V040A and B).

  The following main steam supply system components are classified as equipment class B and are safety-related:

  – The main steam line piping from the steam generator up to, and including, the main steam isolation valves

  – The main steam isolation valve bypass piping up to, and including, the main steam isolation bypass valve

  – The inlet piping from the main steam line up to, and including, the main steam safety valves

  – The inlet piping from the main steam line up to, and including, the power operated relief valve block valve

  – The instrumentation piping up to, and including, the main steam line pressure instrument root valves

- The vent line on the main steam line up to, and including, the first isolation valve, and the nitrogen connection on the main steam line up to, and including, the first isolation valve

- The main steam drain condensate pot located upstream of the main steam isolation valves, and the drain piping up to, and including, the first isolation valve

The following main steam supply system components are classified as equipment class C and are safety-related:

- The main steam line piping from the main steam isolation valves outlet to the pipe restraint located on the wall between the auxiliary building and the turbine building

- The main steam safety valve discharge piping and vent stacks

- The piping from the outlet of the power operated relief block valve up to, and including, the power operated relief valve

- The condensate drain piping from the outlet of the class B isolation valve to the restraint on the wall between the auxiliary building and the turbine building

(The remainder of the main steam supply system is nonsafety-related. Except for the power operated relief valve discharge piping from the power operated relief valve outlet to the power operated relief valve silencer, which is class D, the remainder of the main steam supply system is class E).

- The system provides suitable overpressure protection of the steam generator secondary side and class 2 main steam piping in accordance with ASME Code, Section III.

- The safety-related portion of the system is designed to withstand the effects of a safe shutdown earthquake and to perform its intended function following postulated events.

- The safety-related portions of the system are protected from wind and tornado effects, as described in Section 3.3; flood protection is described in Section 3.4; missile protection is described in Section 3.5; protection against dynamic effects associated with the postulated rupture of piping is described in Section 3.6; seismic protection is described in Section 3.7; environmental design is described in Section 3.11; and fire protection is described in Section 9.5.

- The safety-related portion of the system is designed so that a single, active failure in the main steam supply system will not result in:

  - A loss-of-coolant accident

  - Loss of integrity of other steam lines

  - Loss of the capability of the engineered safety features system to effect a safe reactor shutdown

  - Transmission of excessive loading to the containment pressure boundary

  Component or functional redundancy is provided so that safety functions can be performed assuming a single, active failure coincident with loss of offsite power. Consistent with NUREG 0138 and Standard Review Plan Section 10.3, the nonsafety-related valves downstream of the main steam isolation valves are assumed functional to effect this capability.

- The portion of the main steam supply system that is constructed in accordance with ASME Code, Section III, requirements is provided with access to welds and removable insulation, as required for in-service inspection in accordance with ASME Code, Section XI. (See Subsection 10.3.4.4.)

- The main steam supply system is designed to function in the normal and accident environments identified in Section 3.11.

- The main steam supply system is qualified to leak-before-break criteria as described in Section 3.6.

- The main steam supply system design complies with containment isolation criteria as discussed in Subsection 6.2.3.

- The nonsafety-related turbine stop, turbine control, turbine bypass, and moisture separator reheater 2nd stage steam isolation valves are credited in a single failure analysis to mitigate the event for those cases in which the rupture of the main steam or feedwater piping inside containment is the postulated initiating event.

10.3.1.2 Power Generation Design Basis

The following is a list of the principal power generation design bases:

- The main steam supply system delivers steam from the steam generators to the turbine-generator for the range of flowrates, temperatures, and pressures existing from warmup to rated power conditions.

- Each main steam line is sized and routed to provide balanced steam pressures to the turbine stop valves.

- The main steam supply system provides the capacity to dump 40 percent of full plant load steam flow to the condenser during plant step-load reductions.

- The system provides the means of dissipating residual and sensible heat generated from the nuclear steam supply system during hot shutdown and cooldown even when the main condenser is not available. Power-operated atmospheric relief valves are provided to allow controlled cooldown of the steam generator and the reactor coolant system when the condenser is not available.

- Piping system components located downstream of the auxiliary building wall anchor assemblies are designed in accordance with the Power Piping Code, ANSI B31.1.

10.3.2 System Description

10.3.2.1 General Description

The main steam supply system shown in Figures 10.3.2-1 and 10.3.2-2 include the following major components:

- Main steam piping from the steam generator outlet steam nozzles to the main turbine stop valves

- One main steam isolation valve and one main steam isolation valve bypass valve per main steam line

- Main steam safety valves
- Power-operated atmospheric relief valves and upstream isolation valves

Table 10.3.2-1 lists the design data for the major components of the main steam supply system. Table 10.3.2-2 lists the design data for the main steam safety valve.

10.3.2.2 Component Description

10.3.2.2.1 Main Steam Piping

A description of the main steam piping from the steam generators to the turbine stop valves is presented in Table 10.3.2-3.

The main steam lines deliver a steamflow from the secondary side of the two steam generators. A portion of the main steamflow is directed to the reheater and steam seals, with the turbine receiving the remaining steamflow. Table 10.3.2-1 lists the performance data for the main steam supply system. Each of the main steam lines from the steam generators is anchored at the auxiliary building wall and has sufficient flexibility to accommodate thermal expansion.

Design of seismic Category I piping and supports takes into consideration the loads discussed in Subsection 3.9.3.

The main steam lines between the steam generator outlet nozzle and the containment penetration flued head inboard weld are designed to meet the leak-before-break criteria. The portion of the main steam lines between the containment penetration flued head inboard weld and the anchor downstream of the main steam isolation valves is part of the break exclusion zone. Section 3.6 addresses the applicability of leak-before-break and break exclusion zone to the main steam line.

The layout of the steam piping provides for the collection and drainage of condensate to avoid water entrainment, by the proper sloping of lines and the use of condensate drain pots.

The sizing and layout of the main steam piping hydraulically balances the steam line pressure drops from the respective steam generator to the inlet of each turbine stop valve. Two main steam lines are cross-connected into a common header just before branching into each turbine stop valve. This arrangement equalizes flow and pressure to the inlet of the turbine stop valves. This also permits online testing of each turbine stop valve without exceeding the allowable limit on steam generator pressure differential. Each steam generator outlet nozzle contains an internal flow restrictor arrangement to limit flow in the event of a main steam line break. A further description of the flow restrictor is provided in Subsection 5.4.4.

Sampling connections are installed in the nonsafety-related portion of each main steam line, downstream of the main steam isolation valves. These nozzles are used for the sampling of steam. The sampling is monitored and analyzed through the secondary sampling system (SSS). Refer to Subsection 9.3.4 for further discussion of the secondary sampling system.

Containment penetrations are described in Subsection 6.2.3.

Turbine bypass valves are provided between the main steam isolation valves and turbine-generator stop valves, as discussed under the turbine bypass system (refer to Subsection 10.4.4).

Main steam piping is designed to consider the effects of erosion/corrosion. Piping is constructed of erosion/corrosion resistant low alloy steel. Velocities in the main steam piping to the high pressure turbine are limited to reduce the potential for pipe erosion. Low point drains are provided for

collecting and draining moisture and to help reduce the potential for water carryover to the high and low pressure turbines. Pipe wall thickness inspections are performed as required to monitor wall erosion rates.

Branch connections are provided from the main steam system to perform various functions. Upstream of the main steam isolation valves, there are connections for the power-operated atmospheric relief valves, main steam safety valves, low point drains, high point vents, and nitrogen blanketing. Branch piping downstream of the main steam line isolation valves includes connections for the two stage reheaters, turbine bypass system, auxiliary steam/gland seal system, and low point drains. Table 10.3.2-4 further describes branch piping, 2.5 inches and larger, that is downstream of the main steam isolation valves.

Operations and maintenance procedures include precautions, when appropriate, to minimize the potential for steam and water hammer, including:

- Prevention of rapid valve motion
- Process for avoiding introduction of voids into water-filled lines and components
- Proper filling and venting of water-filled lines and components
- Process for avoiding introduction of steam or heated water that can flash into water-filled lines and components
- Cautions for introduction of water into steam-filled lines or components
- Proper warmup of steam-filled lines
- Proper drainage of steam-filled lines
- The effects of valve alignments on line conditions

10.3.2.2.2 Main Steam Safety Valves

Main steam safety valves with sufficient rated capacity are provided to prevent the steam pressure from exceeding 110 percent of the main steam system design pressure:

- Following a turbine trip without a reactor trip and with main feedwater flow maintained
- Following a turbine trip with a delayed reactor trip and with the loss of main feedwater flow

A total main steam safety valve rated capacity as indicated in Table 10.3.2-2 meets this requirement. At the same time, the individual safety valves are limited to the maximum allowable steam relief valve capacity as indicated in Table 10.3.2-2 for a system pressure equal to main steam design pressure plus 10 percent overpressure. This value sufficiently limits potential uncontrolled blowdown flow and the ensuing reactor transient should a single safety valve inadvertently fail or stick in the open position.

Six safety valves are provided per main steam line for the plant. Table 10.3.2-2 lists the performance data and set pressures for the main steam safety valves.

The main steam supply system safety valves are located in the safety-related portion of the main steam piping upstream of the main steam isolation valves and outside the containment in the auxiliary building. Adequate provision is made in the steam piping for the installation and support of

the valves. Consideration is given to the static and dynamic loads when operating or when subjected to seismic events.

The piping and valve arrangement minimizes the loads on the attachment, and analysis confirms the design by use of guidelines in ASME Section III, Nonmandatory Appendix O, "Rules for Design of Safety Valve Installations."

Each safety valve is connected to vent stacks by an open umbrella-type transition piece schematically depicted in detail A of Figure 10.3.2-1.

The vent stacks are designed to:

- Direct the relieved steam away from adjoining structures
- Prevent backflow of relieved steam through the umbrella-type transition section
- Draw a small quantity of ambient air through the umbrella-type transition section and mix with the total steam flow which leaves the vent stack outlet
- Minimize the backpressure on the valve outlet so that it does not restrict the valve's rated capacity

The vent stacks are not required for safety, but are structurally designed to withstand safe-shutdown earthquake loads in order to not jeopardize the performance of safety-related components.

10.3.2.2.3 Power-Operated Atmospheric Relief Valves

A power-operated atmospheric relief valve is installed on the outlet piping from each steam generator to provide for controlled removal of reactor decay heat during normal reactor cooldown when the main steam isolation valves are closed or the turbine bypass system is not available. The valves are sized to provide a flow as indicated in Table 10.3.2-1. The maximum capacity of the relief valve at design pressure is limited to reduce the magnitude of a reactor transient if one valve would inadvertently open and remain open.

Each power-operated relief valve is located outside the containment in the auxiliary building upstream of the main steam isolation valves, in the safety-related portion of the main steam line associated with each steam generator. This location permits valve operation following transient conditions, including those which could result in closure of the main steam isolation valves.

The operation of the power-operated relief valves is automatically controlled by steam line pressure during plant operations. The power-operated relief valves automatically modulate open and exhaust to atmosphere whenever the steam line pressure exceeds a predetermined setpoint. As steam line pressure decreases, the relief valves modulate closed, reseating at a pressure at least 10 psi below the opening pressure. The setpoint is selected between no-load steam pressure and the set pressure of the lowest set safety valves.

The steam generator power-operated atmospheric relief valves provide a nonsafety-related means for plant cooldown by discharging steam to the atmosphere when the turbine bypass system is not available. Under such circumstances, the relief valves (in conjunction with the startup feedwater system) allow the plant to be cooled down at a controlled cooldown rate from the pressure setpoint of the lowest set of safety valves down to the point where the normal residual heat removal (RNS) system can remove the reactor heat.

For their use during plant cooldown, the power-operated atmospheric relief valves are automatically controlled by steam line pressure, with remote manual adjustment of the pressure setpoint from the control room or the remote shutdown workstation. To effect a plant cooldown, the operator manually adjusts the pressure setpoint downward in a step-wise fashion. The maximum cooldown rate achievable is limited by the flow-passing capability of the relief valves, the number of steam generators (and hence the number of relief valves) in service, the available startup feedwater pumping capacity and by the desire to either maintain or recover steam generator water levels during the cooldown.

The power-operated atmospheric relief valves also help to avoid actuation of the safety valves during certain transients and, following safety valve actuation, act to assist the safety valves to positively reseat by automatically reducing and regulating steam pressure to a value below the safety valve reseating pressure. The operation of each power-operated atmospheric relief valve is controlled in response to measurements of steam line pressure provided by four separate pressure taps on the associated steam line.

The valve operator is an air-operated modulating type, providing throttling capability over a range of steam pressures.

The atmospheric relief valves are controlled by nonsafety-related control systems for the modulating steam relief function. The capability for remote manual valve operation is provided in the main control room and at the remote shutdown workstation. A safety-related solenoid is provided to vent the air from the valve operator to terminate a steam line depressurization transient.

An isolation valve with remote controls is provided upstream of each power operated relief valve providing isolation of a leaking or stuck-open valve. The upstream location allows for maintenance on the power-operated relief valve operator at power. The motor-operated isolation valve employs a safety-related operator and closes automatically on low steam line pressure to terminate steam line depressurization transients. The isolation valve is a containment isolation boundary and therefore is specified as safety-related, active, ASME Code, Section III, Safety Class 2.

10.3.2.2.4 Main Steam Isolation Valves

The function of the main steam isolation is to limit blowdown to one steam generator in the event of a steam line break to:

- Limit the effect upon the reactor core to within specified fuel design limits
- Limit containment pressure to a value less than design pressure

Main steam isolation consists of one quick-acting gate valve in each main steam line and one associated globe main steam isolation bypass valve with associated actuators and instrumentation. These valves are located outside the containment, downstream of the steam generator safety valves and the atmospheric relief valve, in the auxiliary building. The isolation valves provide positive shutoff with minimum leakage during postulated line severance conditions either upstream or downstream of the valves.

The main steam isolation valves close fully upon receipt of a manual or automatic signal and remain fully closed. Upon receipt of the closing signal, the main steam isolation valves complete the closing cycle despite loss of normally required utility services for actuator and/or instrumentation. On loss of actuating hydraulic power, the valves fail to the closed position. On loss of electrical power the valves remain in their current position. Position indication and remote manual operation of the isolation valves are provided in the control room and remote shutdown workstation. Additionally, provisions are made for in-service inspection of the isolation valves.

Closure of the main steam isolation valves and main steam isolation bypass valves is initiated by the following:

- Low steam line pressure in one of two loops
- High containment pressure
- High negative steam pressure rate in one of two loops
- Low T_{cold} in either reactor coolant loop
- Manual actuation: There are four controls for main steam line actuation. Two of the controls provide system level actuation, that is, isolate both steam lines, and two of the controls, one per loop, provide isolation of a single steam line.
- Manual reset: In addition to the controls for manual isolation actuation, there are two controls for manual reset of the steam line isolation signal, one for each of the logic divisions associated with steam line controls, which can be used to manually reset that division's steam line isolation signal.

Each main steam isolation valve is a bidirectional wedge type gate valve composed of a valve body that is welded into the system pipeline. The main steam isolation gate valve is provided with a hydraulic/pneumatic actuator. The valve actuator is supported by the yoke, which is attached to the top of the body. The valve actuator consists of a hydraulic cylinder with a stored energy system to provide emergency closure of the isolation valve. The energy to operate the valve is stored in the form of compressed nitrogen contained in one end of the actuator cylinder. The main steam isolation valve is maintained in a normally open position by high-pressure hydraulic fluid. For emergency closure, redundant solenoids are energized resulting in the high-pressure hydraulic fluid being dumped to a fluid reservoir.

The main steam isolation bypass valves are used to permit warming of the main steam lines prior to startup when the main steam isolation valves are closed. The bypass valves are modulating, air-operated globe valves. For emergency closure, redundant 1E solenoids are provided. Each solenoid is energized from a separate safety-related division.

10.3.2.3 System Operation

10.3.2.3.1 Normal Operation

During normal power operation, the main steam supply system supplies steam to meet the demand of the main turbine system. The main steam supply system also supplies steam as required to the auxiliary steam system, and reheating steam to the moisture separator reheater. The main steam supply system also provides steam to the turbine gland seal system.

The main steam supply system is capable of accepting a ±10-percent step change in load followed by a ±5-percent/min ramp change without discharging steam to the atmosphere through the main steam safety valves or to the main condenser through the turbine bypass system. For large step change load reductions, steam is bypassed (up to 40 percent of full load flow) directly to the condenser via the turbine bypass system. As discussed in Subsection 10.4.4, the main steam supply system, in conjunction with the turbine bypass system, is capable of accepting a 100-percent net load rejection without reactor trip (in conjunction with a reactor rapid power reduction) and without lifting safety valves. If the turbine bypass system is not available, steam is vented to the atmosphere via the power-operated atmospheric relief valves and the main steam safety valves, as required.

10.3.2.3.2 Emergency Operation

In the event that the plant must be shut down, the main steam isolation valves with associated main steam isolation bypass valves and other valves associated with the main steam lines can be closed. The power-operated atmospheric relief valves are then used to remove reactor decay and primary system sensible heat to cooldown to conditions at which the normal residual heat removal system can perform the remaining cooldown function. If the power-operated atmospheric relief valve for an individual main steam line is unavailable because of the loss of its control or power supply, the respective safety valves will provide overpressure protection. The remaining power-operated atmospheric relief valve is sufficient to cooldown the plant.

In the event that a design basis accident occurs, which results in a large steam line break, the main steam isolation valves with associated main steam isolation bypass valves automatically close. The closure of the main steam isolation valves and associated main steam isolation bypass valves result in no more than one steam generator supplying a postulated break.

The passive residual heat removal system (Section 6.3) provides safety-related decay heat removal capability should steam relief and feedwater be unavailable.

10.3.3 Safety Evaluation

- Each main steam line is provided with safety valves that limit the pressure in the line to limit over-pressurization and remove stored energy. Each line is provided with a power-operated atmospheric relief valve to permit reduction of the main steam line pressure and remove stored energy to achieve an orderly shutdown. The startup feedwater system, described in Subsection 10.4.9, provides makeup to the steam generators consistent with the steaming rate.

- Redundant power supplies and power divisions operate the main steam isolation valves and main steam isolation bypass valves to isolate safety and nonsafety-related portions of the system. Branch lines upstream of the main steam isolation valves contain normally closed, power-operated atmospheric relief valves which modulate open and closed on steam line pressure. In the event the atmospheric relief valves fail closed, the safety valves provide overpressure protection.

  Releases of radioactivity from the main steam system are minimized because there are no significant amounts of radioactivity in the system under normal operating conditions. Additionally, the main steam isolation system provides controls for reducing releases, as described in Chapter 15, following a steam generator tube rupture.

  Detection of radioactive leakage into the system, which is characteristic of a steam generator tube leak or rupture, is facilitated by adjacent-to-line radiation monitors on each steam line, the radiation monitor in the turbine vent and drain system which monitors condenser air removal, and the steam generator blowdown line radiation monitor.

- Section 3.2 provides the quality group classification, the required design and fabrication codes, and seismic category applicable to the safety-related portion of this system and supporting systems. The power supplies and controls necessary for safety-related functions of the main steam supply system are safety-related, as described in Chapters 7 and 8.

- The safety-related portion of the main steam supply system is located in the containment and auxiliary building. These buildings are designed to withstand the effects of earthquakes, tornadoes, hurricanes, floods, external missiles, and other appropriate natural phenomena. Sections 3.3, 3.4, 3.5, 3.7, and 3.8 describe the bases of the structural design of these buildings.

  The safety-related portion of the main steam supply system is designed to remain functional after a safe shutdown earthquake. Sections 3.7 and 3.9 provide the design loading conditions that were considered. Sections 3.5, 3.6, and 9.5 describe the analyses to provide confidence that a safe shutdown, as outlined in Section 7.4, is achieved and maintained.

- As indicated by the failure mode and effects analysis in Table 10.3.3-1, no single failure coincident with loss of offsite power compromises the system safety functions.

- The main steam supply system is initially tested with the program given in Chapter 14. Periodic in-service functional testing is done in accordance with Subsection 10.3.4.

  Section 6.6 provides the ASME Code, Section XI requirements that are appropriate for the safety-related portions of the main steam supply system.

- The safety-related components of the main steam supply system are qualified to function in normal, test, and accident environmental conditions. The environmental qualification program is described in Section 3.11.

- A discussion of high energy pipe break locations and evaluation of effects are provided in Subsections 3.6.1 and 3.6.2.

- A discussion of the leak-before-break application and criteria is presented in Subsection 3.6.3.

10.3.4 Inspection and Testing Requirements

10.3.4.1 Preoperational Testing

10.3.4.1.1 Valve Testing and Inspection

The operability and relief setpoints of the main steam safety valves will be verified at operating temperature using steam as the pressurization fluid. The advantage of this approach is that the testing at temperature will reduce the probability of having to adjust the valve setpoints during hot functional testing heatup. The valves may be either bench tested or in-situ tested. The valves will be adjusted to lift at their set pressure defined in Table 10.3.2-2.

The sum of the rated capacities of the valves shall exceed the capacity specified in Table 10.3.2-1. The relieving capacity of the valve is certified in accordance with the ASME Code, Section III NC-7000.

The lift-point of each power-operated atmospheric relief valve is checked against pressure gauges mounted in the main steam piping.

The power operated relief valves will be verified to have a relief capacity of at least 300,000 lbs/hour at 1106 psia in order to satisfy their non-safety related function of decay heat removal.

The main steam isolation valves are tested to verify the closing time prior to initial startup.

10.3.4.1.2 System Testing

The main steam supply system is designed to allow testing of system operation for both normal and emergency operating modes. This includes operation of applicable portions of the protection system.

The safety-related components of the system are designed and located to permit pre-service and in-service inspections.

10.3.4.1.3 Pipe Testing

The main steam lines within the containment and the auxiliary building are visually and volumetrically inspected at installation as required by ASME Code, Section XI pre-service inspection requirements.

10.3.4.2 In-service Testing

The performance and structural leaktight integrity of system components are demonstrated by operation.

Additional description of in-service inspection and in-service testing of ASME Code, Section III, Class 2 and 3 components is contained in Section 6.6 and Subsection 3.9.6. The nonsafety-related turbine stop, turbine control, and moisture separator reheater 2nd stage steam isolation valves are included in the inservice test program discussed in Subsection 3.9.6.

10.3.5 Water Chemistry

The objectives of the secondary side water chemistry program are as follows:

- Minimizing general corrosion in the steam generators, turbine, and feedwater system by maintaining proper pH control and by minimizing oxygen ingress (coupled with oxygen scavenging)
- Minimizing localized corrosion in the steam generators, turbine, and feedwater system by minimizing chemical contaminant ingress and by controlling contaminant levels through condensate polishing and steam generator blowdown.

10.3.5.1 Chemistry Control Basis

Steam Generator Owner's Group recommendations are considered in the secondary side water chemistry program.

Secondary side water chemistry control basis for AP1000 is shown below:

System Design

- Selection of secondary side materials to minimize corrosive species such as copper oxides
- Capability of deaeration in the demineralized water supply path, condenser, and deaerator
- Capability of continuous blowdown of the steam generator bulk water
- Capability of post-construction cleaning of the feedwater system followed by wet layup of the feedwater system and steam generators

Operation Phase

- Early identification of contaminant ingress (salts, corrosion products, and oxygen)
- Capability to filter and demineralize condensate by passage of part of the condensate flow through a condensate polisher system prior to and during plant startup and shutdown and during power operation with abnormal secondary cycle chemistry.
- Chemical addition to establish and maintain an environment that minimizes system corrosion
- Identification of action levels based on chemistry conditions, as determined by high sensitivity continuous or semi-continuous monitoring or by grab sampling

10.3.5.2 Contaminant Ingress

Contaminants may be introduced into the secondary side water system through three major mechanisms: makeup water; condenser tube leaks; atmospheric leaks at the condenser or pump seals. The following methods are used to detect the ingress of contaminants in the secondary water system:

- Demineralized water is continuously monitored as it is being produced in the water treatment plant.
- Ionic contaminants are detected by monitoring (either continuous process monitors or sample analysis) the condensate pump discharge, feedwater downstream of addition of heater and moisture separator drains, and steam generator bulk flow as blowdown.
- Atmospheric ingress is detected by monitoring the condensate pump discharge for excessive dissolved oxygen and by monitoring condenser air removal rate.

10.3.5.3 Condensate Polishing

A condensate polishing system with a capacity of one third design condensate flow is provided to remove corrosion products and ionic contaminants. This polishing system will not normally be employed during all phases of plant operation.

The secondary side water system has provisions for recirculating feedwater to the condenser prior to and during startup. The polisher may be used during this phase to remove corrosion products from the feedwater and thus prevent their ingress into the steam generators. Full flow or near full flow condensate polishing is possible at the lower condensate flows that exist during startup and low-power operation. See Subsection 10.4.6 for additional information.

10.3.5.4 Chemical Addition

AP1000 employs an all-volatile treatment (AVT) method to minimize general corrosion in the feedwater system, steam generators, and main steam piping. A pH adjustment chemical and an oxygen scavenger are the two chemicals to be injected into the condensate pump discharge header, downstream of the condensate polishers.

To reduce the general corrosion rate of ferrous alloys, a volatile pH adjustment chemical is injected to maintain a noncorrosive environment. Although the pH adjustment chemical is volatile and will not concentrate in the steam generator, it will reach an equilibrium level which will help establish noncorrosive conditions.

An oxygen scavenger is added to maintain the dissolved oxygen content in the feedwater within specified limits for each mode of operation. The oxygen scavenger also promotes the formation of a protective magnetite layer on ferrous surfaces and keeps this layer in a reduced state, further inhibiting general corrosion.

Alkaline chemistry supports maintaining iodine compounds in their nonvolatile form. When iodine is in its elemental form, it is volatile and free to react with organic compounds to create organic iodine compounds, which are not assumed to remain in solution. It is noted that no significant level of organic compounds is expected in the secondary system. The secondary water chemistry, thus, does not directly impact the radioactive iodine partition coefficients.

10.3.5.5 Action Levels for Abnormal Conditions

Appropriate responses to abnormal chemistry conditions provide for the long-term integrity of secondary cycle components. Action taken when chemistry parameters are outside normal operating ranges will, in general, be consistent with action levels described in Reference 1.

Secondary side water chemistry guidelines are provided in Table 10.3.5-1.

10.3.5.6 Layup and Heatup

AP1000 anticipates no long-term steam generator layup under dry conditions. When maintenance or inspection is required on the secondary side of the steam generators, the steam generators are drained hot under nitrogen atmosphere. After cooling, the nitrogen purge is lifted and the maintenance/inspection begun.

Wet layup conditions are established for corrosion protection during outages. Guidelines are given in Table 10.3.5-2.

Before heatup to full power, the bulk water in the steam generators is normally brought into power operation specifications by draining and refilling or by feeding and bleeding. Guidelines for heatup are provided in Table 10.3.5-3.

10.3.5.7 Chemical Analysis Basis

Guidelines for chemical control and diagnostic parameters are listed in Table 10.3.5-1. Each parameter will be addressed as indicated below.

Oxygen in the presence of moisture rapidly corrodes carbon steel. These corrosion products may be carried through the feedwater system and form sludge in the steam generator. This sludge forms an environment for localized corrosion mechanisms on steam generator tubes. Thus, concentrations of oxygen are kept as low as practical in the feedwater system, and dissolved oxygen is controlled at the condenser and deaerator to prevent oxygen transport to the feedwater system.

Residual concentration of the oxygen scavenger is also measured in the feedwater sample and is used as input for injection of the oxygen scavenger.

In the absence of significant impurities, the pH is controlled by the concentration of the volatile pH adjustment chemical and the oxygen scavenger. Maintaining the pH within the recommended band results in minimal corrosion rates of ferrous materials.

Conductivity is also a measure of the presence of ionic contamination and provision is made for monitoring conductivity in samples of condensate, feedwater, and steam generator blowdown.

Provision is also made for specific ions, such as sodium and chloride, which could be indicative of aggressive chemistry conditions.

10.3.5.8 Sampling

In addition to the sampling locations listed in Table 10.3.5-1, other sampling points are provided in the secondary side water system. These sampling points are identified in Table 9.3.4-1 (continuous and semi-continuous sample points) and Table 9.3.4-2 (selective measurements).

10.3.5.9 Condenser Inspection

The secondary side water chemistry program includes an inspection program of the condenser to verify condenser integrity. This program includes a visual inspection of the condenser during outages and component inspection for air leaks during plant operation.

10.3.5.10 Conformance to Branch Technical Position MTEB 5-3

AP1000 conformance to Branch Technical Position MTEB 5-3 is discussed in Section 1.9.

10.3.6 Steam and Feedwater System Materials

10.3.6.1 Fracture Toughness

The material specifications for pressure-retaining materials in safety-related portions of the main steam and feedwater systems meet the fracture toughness requirements of ASME Code, Section III, Articles NC-2300 and ND-2300 for Quality Group B and Quality Group C components.

10.3.6.2 Material Selection and Fabrication

Pipe, flanges, fittings, valves, and other piping material conform to the referenced ASME, ASTM, ANSI, or Manufacturer Standardization Society-Standard Practice code.

No copper or copper-bearing materials are used in the steam and feedwater systems.

The following requirements apply to the nonsafety-related portion of the main steam system.

Component	**Alloy/Carbon Steel**
Pipe	ANSI/ASME B36.10M
Fittings	ANSI/ASME B16.9, B16.11
Flanges	ANSI/ASME B16.5

Material selection and fabrication requirements for ASME Code, Section III, Class 2 and 3 components in the safety-related portions of the main steam and feedwater systems are consistent with the requirements for ASME Class 2 and 3 systems and components outlined in Subsections 6.1.1.1 and 6.1.1.2. Material specifications for the main steam and feedwater systems are listed in Table 10.3.2-3.

Conformance with the applicable regulatory guides is described in Subsection 1.9.1.

Nondestructive inspection of ASME Code, Section III, Class 2 and 3 components in the safety-related portions of the main steam and feedwater systems is addressed in Subsection 6.6.5.

Appropriate operations and maintenance procedures provide the necessary controls during operation to minimize the susceptibility of components made of stainless steel and nickel-based materials to intergranular stress-corrosion cracking by controlling chemicals that are used on system components.

10.3.7 Combined License Information

This section contained no requirement for information.

10.3.8 References

1. "PWR Secondary Water Chemistry Guidelines," EPRI TR-102134-R5, March 2000.

Table 10.3.2-1
Main Steam Supply System Design Data

Steam Flow (lb/hr)	Maximum Calculated
Per steam generator	7.49×10^6
Total	14.97×10^6
Design Conditions	
Design pressure (psia)	1200
Design temperature (°F)	600°F
Operating Conditions	
Full plant load pressure (psia)	836
Full plant load temperature (°F)	523.3
No load (hot standby) pressure (psia)	1106
No load (hot standby) temperature (°F)	557
Main Steam Piping: See Table 10.3.2-3.	
Steam Generator Flow Restrictor	
Number per steam generator outlet nozzle	7
Throat size (ft^2)	0.2
Total area (ft^2)	1.4
Power-Operated Relief Valve	
Number per main steam line	1
Normal set pressure	1138 psig
Design capacity	
Minimum:	70,000 lb/hr at 100 psia steam generator pressure
Maximum:	1,020,000 lb/hr at 1200 psia steam generator pressure
Code	ASME Code, Section III, Class 3, seismic Category I
Actuator	Air-operated modulating

Table 10.3.2-2
Design Data for Main Steam Safety Valves

Number per main steam line		6
Total number of valves required per steam line for full power operation		6
Relieving capacity per valve at 110% of design pressure		1,370,000 lb/hr
Relieving capacity per steam line at 110% of design pressure		8,240,000 lb/hr
Total relieving capacity, 2 lines at 110% of design pressure		16,480,000 lb/hr
Valve size		8 x 10 (Dual Discharge)
Design code		ASME Code, Section III, Class 2, seismic Category I
Valve Number	**Set Pressure (psig)**	**Relieving Capacity[(a)] (lb/hr)**
SGS PL V030A(B)	1185	≥ 1,320,000
SGS PL V031A(B)	1197	≥ 1,340,000
SGS PL V032A(B)	1209	≥ 1,350,000
SGS PL V033A(B)	1221	≥ 1,360,000
SGS PL V034A(B)	1232	≥ 1,370,000
SGS PL V035A(B)	1232	≥ 1,370,000
Total capacity, at 103% valve setpoint pressures, 2 lines		≥ 16,220,000

Note:

a. Based on system accumulation pressure of 3%, per Subsection NC-7512 of ASME Code, Section III, Division 1, 1989 Edition, Subsection NC, Class 2 components.

Table 10.3.2-3
Description of Main Steam and Main Feedwater Piping

Segment	Material Specification
Main Steam Line	
Steam generator outlet to containment penetration	SA-335 Gr. P11 seamless pipe
Containment penetration to MSIV	SA-335 Gr. P11 seamless pipe
MSIV to auxiliary/turbine building wall	SA-335 Gr. P11 seamless pipe
Auxiliary/turbine building wall to equalization header[a]	ASTM A-335 Gr. P11 seamless pipe
Branch lines to turbine stop valves[a]	ASTM A-335 Gr. P11 seamless pipe
Main Feedwater Line	
Feedwater pump outlet to individual steam generator feedwater lines[a]	ASTM A-335 Gr. P-11 and ASTM A-106 Gr. B
Feedwater heater bypass line[a]	ASTM A-335 Gr. P-11 and ASTM A-106 Gr. B
Start of individual steam generator feedwater lines to auxiliary/turbine building wall[a]	ASTM A-335 Gr. P-11
Auxiliary/turbine building wall to MFIV	SA-335 Gr. P-11
MFIV to containment penetration	SA-335 Gr. P-11
Containment penetration to steam generator nozzle	SA-335 Gr. P-11

Note:
a. Piping is beyond the ASME Section III piping boundary.

Table 10.3.2-4
Main Steam Branch Piping
(2.5-Inch and Larger)
Downstream of MSIV

Description	Maximum Steam Flow	Shutoff Valve	Valve Closure Time	Actuator	Comments
Turbine bypass lines to condenser; 6 lines total	998,000 lb/hr each line	16-in. globe (turbine bypass valve)	5 sec or less[a] when tripped closed	Air operator; fail close	Bypass valve is tripped closed on main steam isolation signal
Reheating steam to moisture separator reheater (MSR), 2 lines total	242,000 lb/hr, each MSR	10-in. globe (MSR reheat 2nd stage steam isolation valve, 2 each)	5 sec or less[a]	Air operators, fail close	Main steam flow to reheater ceases (thermodynamically) following turbine trip flow ceases following valve closure on a main steam isolation signal
Main steam supply to auxiliary steam system	400,000 lb/hr	16-in. globe (isolation valve)	10 sec or less	Air operator; fail close	Main steam flow to auxiliary steam system terminates following isolation valve closure on a main steam isolation signal
High pressure turbine steam supply lines; 4 lines total	3,744,000 lb/hr each line	27.5-in. stop valve in each line	5 sec or less[a]	Hydraulically operated from electro-hydraulic turbine control system	Main steam flow to high pressure turbine ceases following stop valve closure on a turbine trip
Main steam supply to turbine glands	37,000 lb/hr	6-in. gate (isolation valve)	60 sec or less	Motor operator; manually operated	Main steam flow to turbine seals continues following a turbine trip; however, this steam flow is relatively small and has been considered in the steam line break analysis (Section 3.6)

Note:

a. Specified closure times are for safety analysis purposes; other system performance requirements may dictate more rapid closure.

Table 10.3.3-1 (Sheet 1 of 10)
Main Steam Supply System Failure Modes and Effects Analysis

Item	Description of Component	Safety Function	Plant Operating Mode	Failure Mode(s)	Method of Failure Detection	Failure Effect on System Safety Function Capability	General Remarks
1	MSIVs V040A(B) normally open, fail closed with self contained hydraulic operator	Isolates SG A(B) in the event of a MSLB to prevent blowdown of more than one SG; Isolates containment in conjunction with SG and main steam line inside containment	a. All but DBA	b. Fails closed or fails to open on command	a. Position indication on main control room & remote shutdown work-station	a. None; Plant goes to or remains in a safe shutdown condition	One MSIV is provided for each steam line. Each MSIV redundantly activated from separate safety-related power divisions. Redundant backup provided by downstream isolation valves. Redundant containment isolation provided by SG and main steam line inside containment.
			b. DBA Except SGTR	b. Fails to close upon ESF isolation signal	b. Position indica-tion on main control room & remote shutdown workstation	b. None; closure of either MSIV or downstream valves prevent blowdown of more than one SG; containment integrity is maintained by MSIV and either SG and steam line integrity inside containment or downstream valves.	
			c. DBA-SGTR	c. Fails to close on ESF isolation signal	c. Same as 1b	c. None; limiting failure is PORV failed open discharging to atmo-sphere. Termination of break flow occurs on automatic block valve closure plus PRHR actuation. Continued break flow past MSIV precluded by redundant downstream isolation valves.	Redundant isolation provided by downstream isolation valves

Table 10.3.3-1 (Sheet 2 of 10)
Main Steam Supply System Failure Modes and Effects Analysis

Item	Description of Component	Safety Function	Plant Operating Mode	Failure Mode(s)	Method of Failure Detection	Failure Effect on System Safety Function Capability	General Remarks
2	Main steam power operated relief valve V233A(B) normally closed fail closed, air- operated control valve	Isolates SG A(B) in the event of a MSLB to prevent blowdown from more than one SG in conjunction with block valve	a. All but DBA	a1. Fails to open upon open signal	a1. Position indication on main control room & remote shutdown workstation; steam line high pressure	a1. None; heat removal available via steam dump or PRHR; safety valves provide over-pressure protection	Redundant isolation provided by PORV and block valve via separate safety-related power divisions.
				a2. Fails open or fails to close on command including spurious operation	a2. Position indication on main control room & remote shutdown workstation; low SG level or SG pressure	a2. None; maximum flow less than DBA limit; shutdown effected with 1 PORV, PRHR, or steam dump	
			b. DBA except SGTR	b. Fails to close	b. Position indication on main control room & remote shutdown workstation; steam line low pressure alarm	b. None, redundant isolation provided by PORV block valve	Dose analysis based on failed open PORV with subsequent block valve closure
			c. DBA - SGTR	c. Fail to close	c. Position indication on main control room & remote shutdown workstation; streamline low pressure alarm	c. None; automatic redundant isolation provided by PORV block valve. Releases based on signal generation and closure time delay	

Table 10.3.3-1 (Sheet 3 of 10)
Main Steam Supply System Failure Modes and Effects Analysis

Item	Description of Component	Safety Function	Plant Operating Mode	Failure Mode(s)	Method of Failure Detection	Failure Effect on System Safety Function Capability	General Remarks
3	Main steam line PORV block valve V027A(B), normally open fail as is motor-operated gate valve	Isolates SG A(B) in the event of a MSLB to prevent blowdown from more than 1 SG in conjunction with PORV and provides containment integrity in conjunction with SG and main steam line inside containment	a. All but DBA	a1. Same as 2.a1 a2. Same as 2.a2	a1. Same as 2.a1 a2. Same as 2.a2	a1. Same as 2.a1 a2. Same as 2.a2	Redundant steam line isolation provided by PORV and block valve via separate safety-related power divisions. Redundant containment isolation provided by SG and main steam line inside containment.
			b. DBA except SGTR	b. Same as 2b	b. Position indication on main control room & remote shutdown workstation	b. Same as 2b; containment integrity is maintained by SG and main steam line inside containment	
			c. DBA SGTR	c. Same as 2b	c. Position indication on main control room & remote shutdown workstation	c. None, automatic redundant isolation of the PORV on low steam line pressure	Dose analysis based on failed open PORV isolated by block valve. Releases equivalent.

Table 10.3.3-1 (Sheet 4 of 10)
Main Steam Supply System Failure Modes and Effects Analysis

Item	Description of Component	Safety Function	Plant Operating Mode	Failure Mode(s)	Method of Failure Detection	Failure Effect on System Safety Function Capability	General Remarks
4	Main steam isolation bypass valve V240A(B) normally closed, fail closed air-operated valve	Isolates SG A(B) in the event of a MSLB to prevent blowdown of more than one SG; isolates containment in conjunction with SG and main steam line inside containment	a. All but DBA	a. Fails closed or fails to open on command	a. Position indication on main control room and remote shutdown workstation	a. Plant continues operation or goes to or remains at a safe shutdown condition	One MSIV bypass is provided for each steam line. Each bypass valve redundantly activated from separate 1E power divisions. Redundant backup provided by downstream isolation valves. Redundant containment isolation provided by SG and main steam line inside containment.

Table 10.3.3-1 (Sheet 5 of 10)
Main Steam Supply System Failure Modes and Effects Analysis

Item	Description of Component	Safety Function	Plant Operating Mode	Failure Mode(s)	Method of Failure Detection	Failure Effect on System Safety Function Capability	General Remarks
			b. DBA except SGTR	b. Fails to close upon ESF isolation signal	b. Position indication on main control room & remote shutdown workstation	b. None, closure of either bypass valve or down-stream isolation valves prevents blowdown of more than 1 SG; containment integrity maintained by either MSIV bypass valve or SG/steam line integrity inside containment	
			c. DBA-SGTR	c. Fails to close on ESF isolation signal	c. Position indication on main control room & remote shutdown workstation	c. None, limiting failure is PORV failed open discharging to atmosphere. Termination of break flow occurs on automatic block valve closure plus passive RHR actuation. Continued break flow past MSIV bypass precluded by redundant downstream isolation valves	Redundant isolation provided by downstream isolation valves

Table 10.3.3-1 (Sheet 6 of 10)
Main Steam Supply System Failure Modes and Effects Analysis

Item	Description of Component	Safety Function	Plant Operating Mode	Failure Mode(s)	Method of Failure Detection	Failure Effect on System Safety Function Capability	General Remarks
5	Main steam line drain isolation valve V036A(B), normally open fail closed, air-operated valve	Isolates containment in conjunction with SG and main steam line inside containment. Isolates SG No. 1(2) in the event of a MSLB to prevent blowdown from more than one SG.	a. All but DBA	a. Fails closed or fails to open on command	a. Position indication on main control room & high level alarm in condensate drain pot	a. None; local drains provided to limit moisture carry to turbine	
			b. DBA including SGTR	b. Fails to close upon ESF isolation signal	b. Position indication on main control room	b. None; closure of either series isolation valves provides steam line isolation; containment integrity is maintained by either condensate isolation or SG and main steam line inside containment	

Table 10.3.3-1 (Sheet 7 of 10)
Main Steam Supply System Failure Modes and Effects Analysis

Item	Description of Component	Safety Function	Plant Operating Mode	Failure Mode(s)	Method of Failure Detection	Failure Effect on System Safety Function Capability	General Remarks
6	Main steam line drain control valve V086A(B) normally closed, fail closed, air-operated valve	Isolates SG A(B) in the event of a main steam line break to prevent blowdown to more than one SG	a. All but DBA	a. Fails closed or fails to open on command	a. Position indication on main control room and high level alarm in condensate drain pot	a. None; local drains provided to limit moisture carryover to turbine	
			b. DBA including SGTR	b. Fails to close upon ESF isolation signal	b. Position indication provided on main control room	b. None, closure of either series isolation valves provides steam line isolation	

Table 10.3.3-1 (Sheet 8 of 10)
Main Steam Supply System Failure Modes and Effects Analysis

Item	Description of Component	Safety Function	Plant Operating Mode	Failure Mode(s)	Method of Failure Detection	Failure Effect on System Safety Function Capability	General Remarks
7	Main steam safety valves V030A, V031A, V032A, V033A, V034A, V035A (V030B, V031B, V032B, V033B, V034B, V035B), normally closed	Protect SG A(B) and associated steam line up to MSIV from overpressurization	All	a. Fails to open when required	a. Higher pressure and/or water level in SG A(B)	a. None, 5 out of 6 safety valves for SG A(B) still available with PORV available to supplement relief capacity; also, plant trip occurs on high steam generator level	
				b. Spurious opening or failure to reset after opening	b. Low steam line pressure	b. None, maximum flow from one safety valve less than DBA analysis assumptions, Shutdown effected by other SG or PRHR	

Table 10.3.3-1 (Sheet 9 of 10)
Main Steam Supply System Failure Modes and Effects Analysis

Item	Description of Component	Safety Function	Plant Operating Mode	Failure Mode(s)	Method of Failure Detection	Failure Effect on System Safety Function Capability	General Remarks
8	Steam Generator blowdown isolation V074A(B), normally open, fail closed air-operated valve	Isolates blowdown from SG A(B) upon PRHR actuation; isolates containment in conjunction with SG and blowdown lines inside containment	All	a. Fails closed or fails to open upon command	a. Position indication on the main control room and zero flow measured in blowdown system	a. None, blowdown is terminated but has no safety impact	
				b. Fails open or fails to close on command	b. Position indication on main control room	b. None, redundant isolation of blowdown via series isolation valve V075A(B), Containment integrity is maintained by blowdown isolation or SG and blowdown lines inside containment	Redundant isolation is provided for SG volume for PRHR operation via series valves; containment isolation via blowdown isolation or SG and blowdown lines inside containment

Table 10.3.3-1 (Sheet 10 of 10)
Main Steam Supply System Failure Modes and Effects Analysis

Item	Description of Component	Safety Function	Plant Operating Mode	Failure Mode(s)	Method of Failure Detection	Failure Effect on System Safety Function Capability	General Remarks
9	Steam Generator blowdown isolation V075A(B), normally open, fail closed air-operated valve	Isolates blowdown from SG A(B) upon PRHR actuation	All	a. Fails closed or fails to open upon command	a. Position indication on main control room and zero flow in blowdown system	a. None, blowdown is terminated but has no safety impact	
				b. Fails open or fails to close on command	b. Position indication on main control room	b. None, redundant isolation of blowdown via series isolation valve V074A(B)	Redundant isolation is provided for SG volume for PRHR operation via series valves

Table 10.3.5-1 (Sheet 1 of 3)
Guidelines for Secondary Side Water Chemistry
During Power Operation
Condensate

Parameters	Normal Value
Control	
Cation conductivity due to strong acid anions at 25°C, µS/cm	≤ 0.15
Total cation conductivity at 25°C, µS/cm	≤ 0.3
Dissolved oxygen, ppb[(a)]	≤ 10
Diagnostic	
Total organic carbon, ppb	≤ 100
Sodium, ppb	< 1
pH at 25°C	> 9.0
Specific conductivity at 25°C, µS/cm	2 - 6
Volatile pH adjustment chemical, ppb	(b)

Notes:
a. Air leakage should be reduced until total air ejected flow rate is less than 6 scfm.
b. pH, volatile pH adjustment chemical concentration and specific conductivity should correlate.

Table 10.3.5-1 (Sheet 2 of 3)
Guidelines for Secondary Side Water Chemistry
During Power Operation
Feedwater

Parameters	Normal Value
Control	
pH at 25°C[a]	> 9.5
Hydrazine, ppb[c]	≥ 100
Total iron, ppb	≤ 20
Diagnostic	
Dissolved oxygen, ppb	≤ 2
Cation conductivity due to strong acid anions at 25°C, µS/cm	≤ 0.2
Specific conductivity at 25°C, µS/cm	4.0 - 12.0
Volatile pH adjustment chemical, ppb	(a)

Notes:

a. pH, volatile pH adjustment chemical concentration and specific conductivity should correlate.
b. When operating with condensate polishers, the pH of an all-ferrous system can be controlled to a lower value of 9.2, with action required when pH < 9.2.
c. Values apply if hydrazine is used for oxygen scavenging. An alternate oxygen scavenger may be used with appropriate concentration limits.

Table 10.3.5-1 (Sheet 3 of 3)
Guidelines for Secondary Side Water Chemistry
During Power Operation
Steam Generator Blowdown

Parameters	Normal Value
Control	
pH at 25°C[a]	9.0 - 9.5[b]
Total cation conductivity	≤ 0.8[c]
Sodium, ppb	≤ 20
Chloride, ppb	≤ 20
Sulfate, ppb	≤ 20
Silica, ppb	≤ 300
Diagnostic	
Cation conductivity due to strong acid anions at 25°C, µS/cm	≤ 0.5
Suspended solids, ppb	< 1000
Specific conductivity at 25°C, µS/cm	< 3.0
Volatile pH adjustment chemical, ppb	(a)

Notes:
a. pH, volatile pH adjustment chemical concentration and specific conductivity should correlate.
b. When operating with condensate polishers, the pH of an all-ferrous system can be controlled to a value of > 8.8.
c. Based on concentrations of total anionic species present, any inconsistencies between theoretical and measured values should be investigated.

Table 10.3.5-2
Guidelines for Steam Generator Water During Cold Shutdown/Wet Layup

Parameters	Normal Value	Prior to Heatup (≤ 200°F)
Control		
pH at 25°C	9.8 - 10.5	≥ 9.3[a]
Hydrazine, ppm[b]	75 - 200	
Sodium, ppb	≤ 1000	≤ 100
Chloride, ppb	≤ 1000	≤ 100
Sulfate, ppb	≤ 1000	≤ 100
Diagnostic		
Volatile pH adjustment chemical - as required to achieve pH range		
Total organic carbon, ppb	≤ 100	

Notes:

a. Conformance with pH guideline may be waived prior to achieving no load temperature and passing steam forward to turbine.

b. Values apply if hydrazine is used for oxygen scavenging. An alternate oxygen scavenger may be used with appropriate concentration limits.

Table 10.3.5-3
Guidelines for Steam Generator Blowdown During Heatup (> 200°F to < 5% Power)

Parameters	Normal Value	Value Prior to Power Escalation Above 5%	Value Power Escalation Prior to Above 30%[b]
Control			
pH at 25°C[a]	≥ 9.0	--	≥ 9.0
Total cation conductivity at 25°C, µS/cm	≤ 2.0	≤ 2.0	≤ 0.8
Dissolved oxygen, ppb	≤ 5	≤ 5	≤ 5
Sodium, ppb	≤ 100	≤ 100	≤ 20
Chloride, ppb	≤ 100	≤ 100	≤ 20
Sulfate, ppb	≤ 100	≤ 100	≤ 20
Silica, ppb	--	--	≤ 300
Diagnostic			
Specific conductivity at 25°C, µS/cm[a]	≥ 10		
Volatile pH adjustment chemical[a]	(a)		
Silica, ppb	≤ 1000		

Notes:

a. pH, volatile pH adjustment chemical concentration and specific conductivity should correlate.

b. This column is presented here for startup chemistry continuity with Table 10.3.5-1 since > 5% power denotes power operation. If escalation > 5% power is accomplished prior to meeting the values in this column, Action Level 1 requirements take effect.

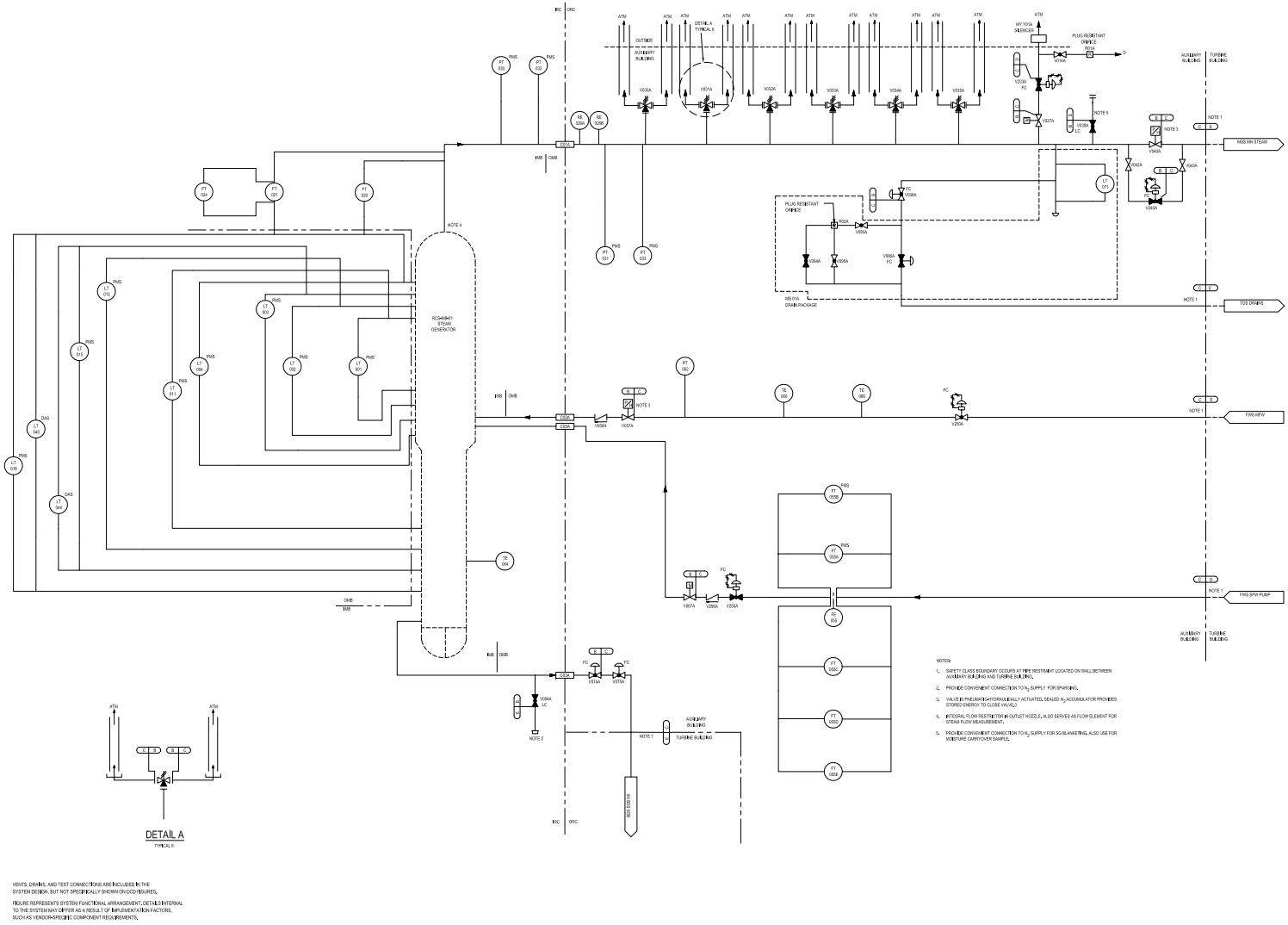

Figure 10.3.2-1 (Sheet 1 of 2)
Simplified Main Steam Piping and Instrumentation Diagram (Safety-Related System)
(REF) SGS 001

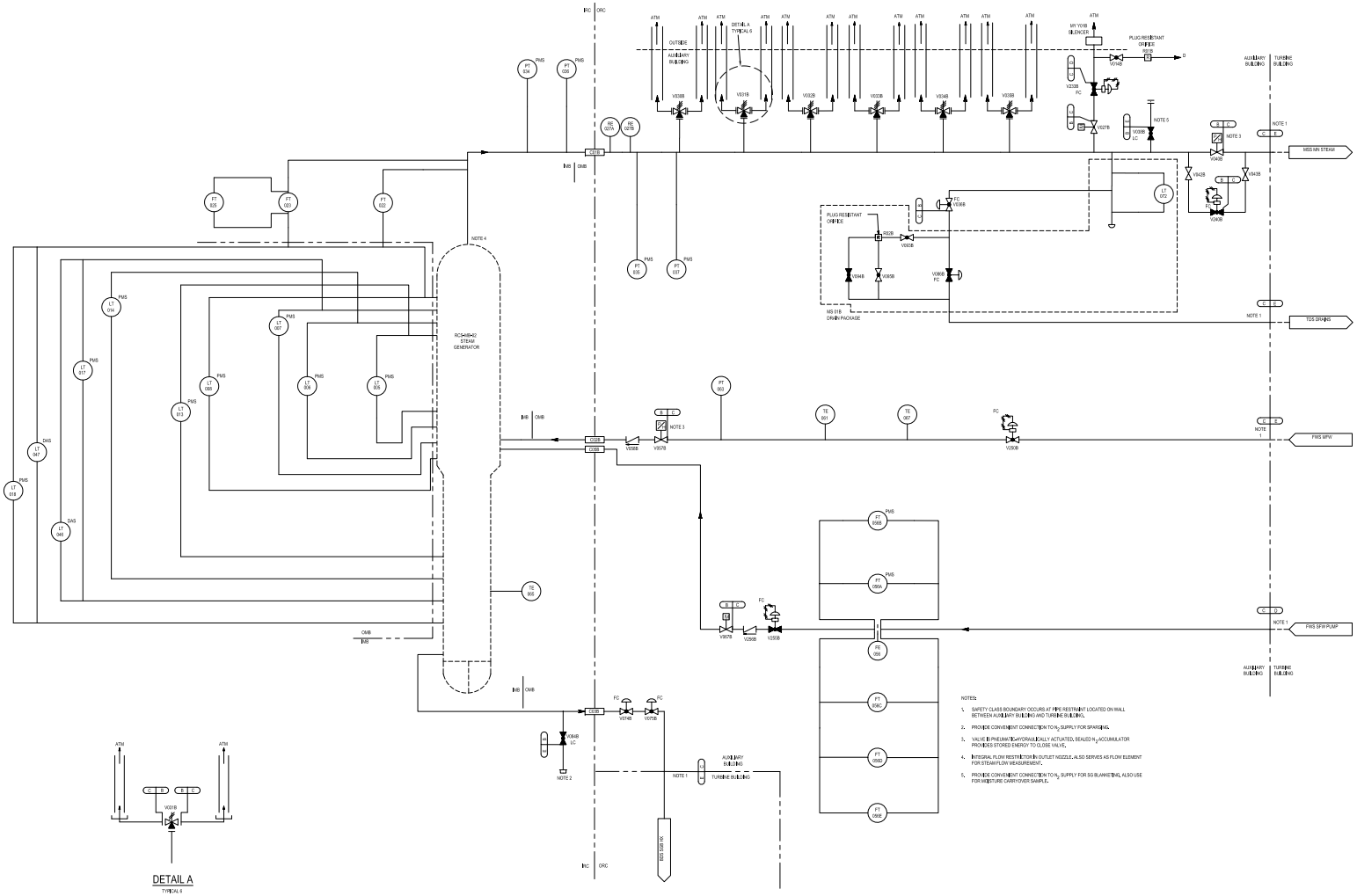

VENTS, DRAINS, AND TEST CONNECTIONS ARE INCLUDED IN THE SYSTEM DESIGN, BUT NOT SPECIFICALLY SHOWN ON DCD FIGURES.

FIGURE REPRESENTS SYSTEM FUNCTIONAL ARRANGEMENT. DETAILS INTERNAL TO THE SYSTEM MAY DIFFER AS A RESULT OF IMPLEMENTATION FACTORS, SUCH AS VENDOR-SPECIFIC COMPONENT REQUIREMENTS.

Figure 10.3.2-1 (Sheet 2 of 2)
Simplified Main Steam Piping and Instrumentation Diagram (Safety Related System)
(REF) SGS 002

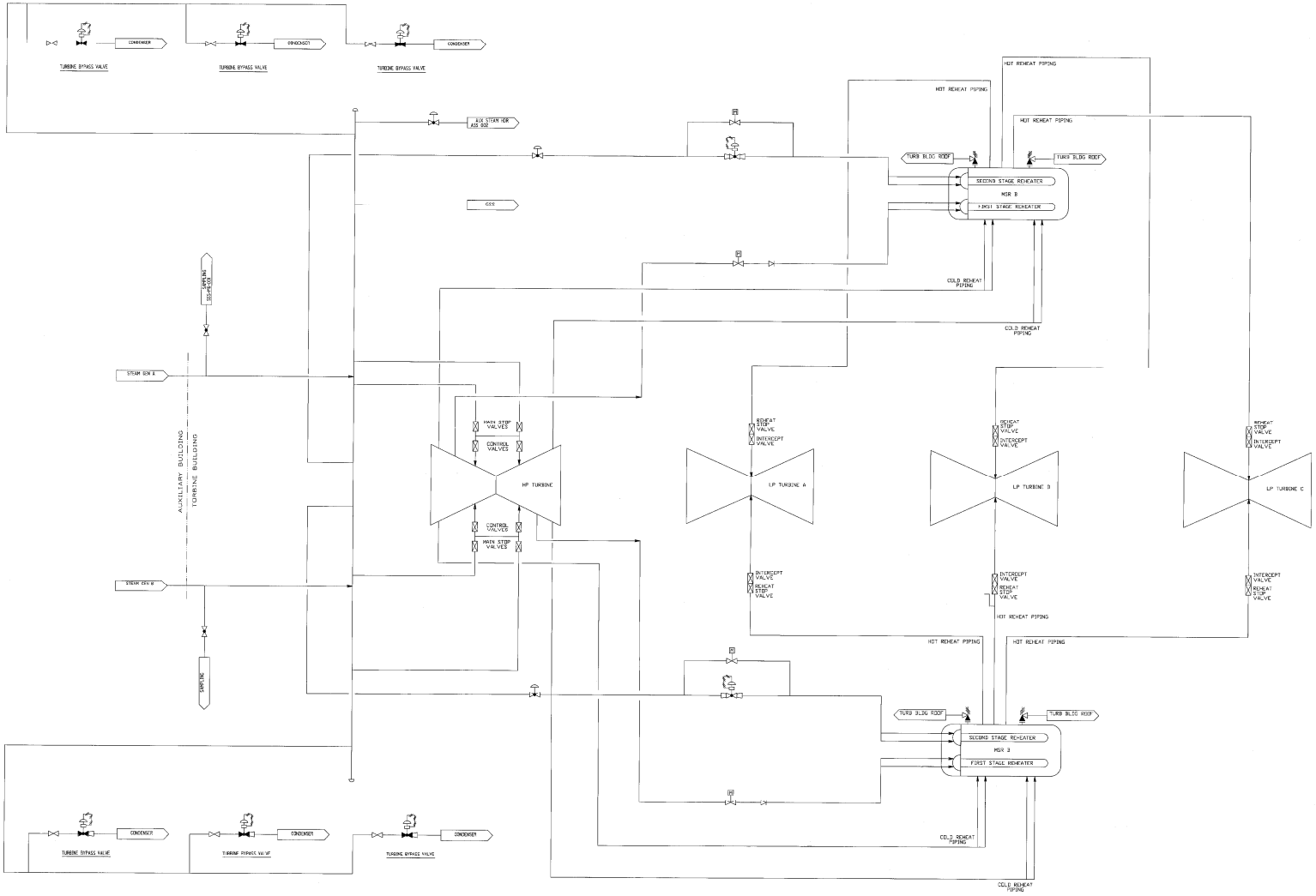

Inside Turbine Building
Figure 10.3.2-2
Main Steam System Diagram
(REF) MSS 001

10.4 Other Features of Steam and Power Conversion System

This section provides descriptions of each of the principal design features of the steam and power conversion system not in Sections 10.2 and 10.3.

10.4.1 Main Condensers

The main condenser functions as the steam cycle heat sink, receiving and condensing exhaust steam from the main turbine and the turbine bypass system.

10.4.1.1 Design Basis

10.4.1.1.1 Safety Design Basis

The main condenser serves no safety-related function and therefore has no nuclear safety design basis.

10.4.1.1.2 Power Generation Design Basis

The main condenser is designed to receive and condense the full-load main steamflow exhausted from the main turbine and serves as a collection point for vents and drains from various components of the steam cycle system.

The main condenser is designed to receive and condense steam bypass flows up to 40 percent of plant full load steam flow while condensing the remaining low-pressure turbine steam flow. This condensing action is accomplished without exceeding the maximum allowable condenser backpressure for main turbine operation.

The condenser hotwell is designed to store at the normal operating water level an amount of condensate equivalent to at least three minutes of full load condensate system operating flow.

The main condenser is designed to deaerate the condensate so that the dissolved oxygen content of the condensate remains under 10 ppb during normal full power operation.

10.4.1.2 System Description

The main condenser is part of the AP1000 condensate system (CDS). The condensate system is described in Subsection 10.4.7 and shown in Figure 10.4.7-1. Classification of equipment and components is given in Section 3.2. Table 10.4.1-1 provides main condenser design data.

The main condenser is a three-shell, single-pass, multipressure, spring-supported unit. Each shell is located beneath its respective low-pressure turbine. The condenser is equipped with titanium or stainless steel tubes. The titanium material provides good corrosion and erosion resisting properties. Freshwater cooled plants do not require the high level corrosion and erosion resistance provided by titanium; therefore, 304L, 316L, 904L, or AL-6X may be substituted if desired.

In a multipressure condenser, the condenser shells operate at slightly different pressures and temperatures. Condensate that is condensed in the low pressure condenser shell drains through internal piping to the high pressure (hottest) shell where it is slightly heated and mixed with condensate of the high pressure shell. Condensate then flows through a single outlet to the suction of the condensate pumps.

The condenser shells are located below the turbine building operating floor and are supported on a spring-mounted foundation from the turbine building basemat. A rigid connection is provided between

each low-pressure turbine exhaust opening and the steam inlet connections of the condenser. Two low-pressure feedwater heaters are located in the neck area of each condenser shell. Piping is installed for hotwell level control and condensate sampling.

10.4.1.2.1 System Operation

During normal power operation, exhaust steam from the low-pressure turbines is directed into the main condenser shells. The condenser also receives auxiliary system flows, such as feedwater heater vents and drains and gland sealing steam spillover and drains.

The hotwell level controller provides automatic makeup or rejection of condensate to maintain a normal level in the condenser hotwells. On low level, the makeup control valves open and admit condensate by vacuum draw to the hotwell from the condensate storage tank. On high-water level the condensate reject control valves open to divert water from the condensate pump discharge to the condensate storage tank. This rejection automatically stops when the hotwell level falls to within normal operating range. Rejection to the storage tank can be manually overridden upon an indication of high-hotwell conductivity to prevent transfer of contaminants into the condensate storage tank in the event of a condenser tube failure.

Air inleakage and noncondensable gases contained in the turbine exhaust steam are collected in the condenser and removed by the main condenser air removal system. The condenser air removal system is discussed further in Subsection 10.4.2.

To protect the condenser shells and turbine exhaust hoods from overpressurization, steam relief blowout diaphragms are provided in the low-pressure turbine exhaust hoods.

The main condenser is capable of accepting up to 40 percent of full load main steam flow from the turbine bypass system. Operation of the turbine bypass system is discussed in Subsection 10.4.4. In the event of high condenser pressure or trip of the circulating water pumps, the turbine bypass valves are prohibited from opening.

Distribution headers are incorporated to protect the condenser tubes, feedwater heaters located in the condenser neck, and other condenser components from turbine bypass or high-temperature drains entering the condenser shell.

The main condenser interfaces with secondary sampling system (SSS) to permit sampling of the condensate in the condenser hotwell. Also, grab sampling capability is provided for each condenser tubesheet. Should circulating water in-leakage occur, these provisions permit determination of which tube bundle has sustained the leakage. Steps may be taken to repair or plug the leaking tubes. This is performed by isolating the circulating water system from the affected water box. Plant power is reduced as necessary. This will temporarily reduce condenser capacity by approximately 50 percent. The water box is then drained and the affected tubes are either repaired or plugged. Refer to Subsection 10.3.5.5 for a discussion regarding action levels for abnormal secondary cycle chemistry conditions.

A condenser tube cleaning system performs mechanical cleaning of the circulating water side of the tubes. This cleaning, along with chemical treatment of the circulating water, reduces fouling and helps to maintain the thermal performance of the condenser.

10.4.1.3 Safety Evaluation

The main condenser has no safety-related function and therefore requires no nuclear safety evaluation.

During normal operation and shutdown, the main condenser has no significant inventory of radioactive contaminants. Radioactive contaminants may enter through a steam generator tube leak. A discussion of the radiological aspects of primary-to-secondary leakage, including anticipated operating concentrations of radioactive contaminants, is included in Chapter 11. No hydrogen buildup in the main condenser is anticipated. The failure of the main condenser and any resultant flooding will not preclude operation of any essential system since no safety-related equipment is located in the turbine building and the water cannot reach safety-related equipment located in Category I plant structures.

10.4.1.4 Tests and Inspections

The condenser water boxes are hydrostatically tested after erection. Condenser shells are tested by completely filling them with water and then testing by the fluorescent tracer method in accordance with Reference 1. Tube joints are leak tested during construction.

10.4.1.5 Instrumentation Applications

The main condenser hotwell is equipped with level control devices for control of automatic makeup and rejection of condensate. Condensate level in the condenser hotwell is indicated in the main control room and alarms on high or low level.

Condenser pressure for each condenser shell is indicated in the main control room and alarms on high level. Also, pressure instrumentation is provided to alarm prior to reaching the maximum turbine operating backpressure limit. Pressure devices are provided to trip the main turbine on high turbine exhaust pressure.

Temperature indication for monitoring condenser performance is provided.

10.4.2 Main Condenser Evacuation System

Main condenser evacuation is performed by the condenser air removal system (CMS). The system removes noncondensable gases and air from the main condenser during plant startup, cooldown, and normal operation. This action is provided by liquid ring vacuum pumps.

10.4.2.1 Design Basis

10.4.2.1.1 Safety Design Basis

The condenser air removal system serves no safety-related function and therefore has no nuclear safety design basis.

10.4.2.1.2 Power Generation Design Basis

- The condenser air removal system removes air and noncondensable gases from the condenser during plant startup, cooldown, and normal operation from the steam side of the three main condenser shells and exhausts them into the atmosphere.

- The system establishes and maintains a vacuum in the condenser during startup and normal operation by the use of liquid ring vacuum pumps.

10.4.2.2 System Description

10.4.2.2.1 General Description

Classification of equipment and components is given in Section 3.2.

The air removal system consists of four liquid ring vacuum pumps that remove air and noncondensable gases from the three condenser shells during normal operation and provide condenser hogging during startup. One vacuum pump is provided for each condenser shell, and one pump is provided as a standby. The noncondensable gases, together with a quantity of vapor, are drawn through the air cooler sections of condenser shells to the suction of the vacuum pumps. These noncondensables consist mainly of air, nitrogen, and ammonia. No hydrogen buildup is anticipated in the system (see Subsection 10.4.1.3). Dissolved oxygen is present in the condensate and condenser hotwell inventory. Only trace amounts of this oxygen are released in the condenser, and the amounts are negligible compared to the amount of gas and vapor being evacuated by the system. Therefore, the potential for explosive mixtures within the condenser air removal system does not exist.

The circulating water system (CWS) provides the cooling water for the vacuum pump seal water heat exchangers. The seal water is kept cooler than the saturation temperature in the condenser to maintain satisfactory vacuum pump performance.

The noncondensable gases and vapor mixture discharged to the atmosphere are not normally radioactive. However, it is possible for the mixture to become contaminated in the event of primary-to-secondary system leakage. Air inleakage and noncondensable gases removed from the condenser and discharged by the vacuum pumps are routed to the turbine island vents, drains, and relief system (TDS) and monitored for radioactivity. Upon detection of unacceptable levels of radiation, operating procedures are implemented. A discussion of the radiological aspects of primary-to-secondary leakage, including anticipated release from the system, is included in Chapter 11.

The discharge from the condenser air removal system has a connection for taking local grab samples. Connections also allow the installation of portable, continuous sampling equipment.

Should the condenser air removal system become inoperable, a gradual increase in condenser back pressure would result from the buildup of noncondensable gases. This increase in backpressure would cause a decrease in the turbine cycle efficiency. If the condenser air removal system remains inoperable, condenser backpressure increases to the turbine trip setpoint, and a turbine trip is initiated. Loss of the main condenser vacuum causes a turbine trip but does not close the main steam isolation valves. A loss of condenser vacuum incident is described in Subsection 15.2.5.

10.4.2.2.2 Component Description

The liquid ring vacuum pumps are supplied as packaged units. Major components in each package include a vacuum pump, seal water heat exchanger, seal water pump, and air/water separator. Seal water is supplied to seal the clearances in the pump and also to condense vapor at the inlet to the pump. Seal water flows through one side of the seal water heat exchanger and circulating water flows through the other side. Seal water make up is provided by the demineralized water transfer and storage system (DWS).

Piping and valves are carbon steel. The piping is designed to ANSI B31.1.

10.4.2.2.3 System Operation

During startup operation, air is removed from the condenser by operating three liquid ring vacuum pumps. The fourth pump is on standby.

During normal plant operation, noncondensable gases are removed from the condenser by three vacuum pumps. If one pump trips, the condition is alarmed in the main control room, and the standby pump is started.

10.4.2.3 Safety Evaluation

The condenser air removal system has no safety-related function and therefore requires no nuclear safety evaluation.

10.4.2.4 Tests and Inspections

Testing and inspection of the system is performed prior to plant operation. A performance test is conducted on each pump in accordance with Reference 2. In addition, the pumps are hydrostatically tested.

10.4.2.5 Instrumentation Applications

The effectiveness of the air removal system is indicated by monitoring condenser pressure, using instrumentation described in Subsection 10.4.1.5. Vacuum pump skid status (enabled/disabled) is indicated in the main control room, and pump trips are alarmed.

Volumetric flow indication is provided to monitor the quantity of exhausted noncondensable gases.

A radiation detector monitors the discharge of the condenser vacuum pumps through the turbine island vents, drains, and relief system (TDS). The radiation detector is indicated and alarmed. For process and effluent radiological monitoring and sampling systems, refer to Section 11.5.

10.4.3 Gland Seal System

10.4.3.1 Design Basis

10.4.3.1.1 Safety Design Basis

The gland seal system (GSS) serves no safety-related function and therefore has no nuclear safety design basis.

10.4.3.1.2 Power Generation Design Basis

- The gland seal system prevents air leakage into and steam leakage out of the casings of the turbine-generator.
- The system returns condensed steam to the condenser and exhausts noncondensable gases into the atmosphere via the turbine island vents, drains, and relief system.
- The presence of radioactive contamination in the noncondensable gas exhausted from the gland seal condenser, is detected by a radiation monitor in the turbine island vents, drains, and relief system.

10.4.3.2 System Description

10.4.3.2.1 General Description

The gland seal system consists of the following items and assemblies:

- Steam supply header
- Steam drains/noncondensable gas exhaust header
- Two motor driven gland seal condenser exhaust blowers
- Associated piping, valves, and controls
- Gland seal condenser
- Vent and drain lines

The quality group standards for the gland seal system are provided in Section 3.2. The gland seal system is shown in Figure 10.4.3-1.

10.4.3.2.2 System Operation

The annular space through which the turbine shaft penetrates the turbine casing is sealed by steam supplied to the rotor glands. Where the packing seals against positive pressure, the sealing steam connection acts as a leakoff. Where the packing seals against vacuum, the sealing steam either is drawn into the casing or leaks outward to a vent annulus maintained at a slight vacuum. The vent annulus receives air leakage from the outside. The air-steam mixture is drawn to the gland seal condenser.

Sealing steam is distributed to the turbine shaft seals through the steam-seal header. This sealing steam is supplied from either the auxiliary steam system (ASS), or from main steam (MSS), extracted ahead of the high-pressure turbine control valves. Steam flow to the header is controlled by the steam-seal feed valve which responds to maintain the steam-seal supply header pressure. The low and high pressure turbine gland steam pressures are maintained by pressure regulating valves provided in both main steam and auxiliary steam system piping. Excess steam is returned to the No. 1 feedwater heaters via the spillover control valve which automatically opens to bypass excess steam from the GSS.

During the initial startup phase of turbine-generator operation, steam is supplied to the gland seal system from the auxiliary steam header which is supplied from the auxiliary boiler. At times other than initial startup, turbine-generator sealing steam is supplied from the MSV and CV gland steam leak-off, the auxiliary steam system, or from main steam.

At the outer ends of the glands, collection piping routes the mixture of air and excess seal steam to the gland seal condenser. The gland seal condenser is a shell and tube type heat exchanger where the steam-air mixture from the turbine seals is discharged into the shell side and condensate flows through the tube side as a cooling medium. The gland seal condenser internal pressure is maintained at a slight vacuum by a motor-operated blower. There are two 100-percent blowers mounted in parallel. Condensate from the steam-air mixture drains to the main condenser while noncondensables are exhausted to the turbine island vents, drains, and relief system through a common discharge line shared by the vapor extractor blowers.

The mixture of noncondensable gases discharged from the gland seal condenser blower is not normally radioactive; however, in the event of significant primary-to-secondary system leakage due to a steam generator tube leak, it is possible to discharge radioactively contaminated gases. The headered discharge line vents to the turbine vents, drains, and relief system which contains a radiation monitor for detection of radioactivity. Upon detection of unacceptable levels of radiation,

operating procedures are implemented. A description of the radiological aspects of primary-to-secondary system leakage is included in Chapter 11.

Failure of the gland seal system normally results in no release of radioactivity to the atmosphere.

10.4.3.3 Safety Evaluation

The gland seal system has no safety-related function and therefore requires no nuclear safety evaluation.

10.4.3.4 Tests and Inspections

The system is tested in accordance with written procedures during the initial testing and operation program. Since the gland seal system is in use and essential parameters are monitored during normal plant operation, the satisfactory operation of the system components demonstrates system operability.

10.4.3.5 Instrumentation Applications

A pressure controller is provided to maintain the steam-seal supply header pressure by providing signals to the steam-seal feed valve. Excess steam flow is handled by the gland spillover control valve which discharges to the No. 1 feedwater heaters.

The gland seal condenser is monitored for shell side pressure and internal liquid level.

Pressure indication with appropriate alarm is provided for monitoring the operation of the system. A radiation detector with an alarm is provided in the turbine island vents, drains, and relief system to detect radiation associated with primary-to-secondary side leakage in the steam generators.

10.4.4 Turbine Bypass System

The turbine bypass system provides the capability to bypass main steam from the steam generators to the main condenser in a controlled manner to dissipate heat and to minimize transient effects on the reactor coolant system during startup, hot shutdown, cooldown, and step-load reductions in generator load. The turbine bypass system is also called the steam dump system, and is part of the main steam system (MSS).

10.4.4.1 Design Basis

10.4.4.1.1 Safety Design Basis

The turbine bypass system serves no safety-related function and therefore has no nuclear safety design basis. The nonsafety-related turbine bypass valves are credited in a single failure analysis to mitigate the event for those cases in which the rupture of the main steam or feedwater piping inside containment is the postulated initiating event.

10.4.4.1.2 Power Generation Design Basis

The turbine bypass system has the capacity to bypass 40 percent of the full load main steam flow to the main condenser.

The turbine bypass system bypasses steam to the main condenser during plant startup and permits a manually controlled cooldown of the reactor coolant system to the point where the normal residual heat removal system can be placed in service.

The turbine bypass system total flow capacity, in combination with bypass valve response time, reactor coolant system design, and reactor control system response, is sufficient to reduce challenges to the main steam power-operated relief valves, main steam safety valves, and pressurizer safety valves during: reactor trip from 100-percent power; and 100-percent load rejection or turbine trip from 100-percent power without reactor trip.

10.4.4.2 System Description

10.4.4.2.1 General Description

The turbine bypass system is part of the main steam system and is shown on Figure 10.3.2-2. The system consists of a manifold connected to the main steam lines upstream of the turbine stop valves and of lines from the manifold with regulating valves to each condenser shell.

The capacity of the system, along with the NSSS control systems, provides the capability to meet the design requirement bases specified in Subsection 10.4.4.1.2. For power changes less than or equal to a 10 percent change in electrical load, the turbine bypass system is not actuated; the total power change is handled by the reactor power control, pressurizer level control, pressurizer pressure control, and the steam generator level control systems described in Section 7.7. For load rejections greater than 10 percent but less than 50 percent, or a turbine trip from 50 percent power or less, the turbine bypass system operates in conjunction with the same control systems used for the 10 percent or less load change to meet the design basis requirements specified in Subsection 10.4.4.1.2. For load rejections greater than 50 percent power, the rapid power reduction system (described in Section 7.7) operates in conjunction with the previously mentioned control systems to meet the design basis requirements. The rapid power reduction system is designed to rapidly reduce the nuclear power to a value that can be handled by the turbine bypass system. Certain transient conditions or system degradations beyond those of Subsection 10.4.4.1.2 may result in a reactor trip and may result in the operation of the main steam power operated relief and safety valves.

10.4.4.2.2 Component Description

The turbine bypass valves are globe valves and are electropneumatically operated. The valves fail to a closed position upon loss of air or electric signal. A modulating positioner responds to the electric signal from the control system and provides an appropriate air pressure to the valve actuator for modulating the valve open.

Solenoid valves located in the air line to each bypass valve actuator serve as protective interlocks for bypass valve actuation and for tripping the valve open or closed. One of the solenoid valves is energized, when required, to bypass the modulating positioner and provide full air pressure to the actuator to quickly trip open the bypass valve. Other solenoid valves, when deenergized, block the air supply to the actuator and vent the actuator; this action blocks the bypass valve from opening, or closes the valve if opened.

Two of the blocking solenoid valves for each turbine bypass valve are redundant and block bypass valve actuation upon low reactor coolant system T_{avg}. This minimizes the possibility of excessive reactor coolant system cooldown. However, the low T_{avg} block can be manually bypassed for the bypass valves that are designated as cooldown valves to allow operation during plant cooldown.

Another blocking solenoid valve prevents actuation of the bypass valve when the condenser is not available. This solenoid valve also prevents unblocking the steam dump valve when the condenser is available unless one of the following signals exist:

- High negative rate of change of turbine pressure
- Reactor trip

- Control system in the steam header pressure control mode (see Subsection 10.4.4.3)

10.4.4.3 System Operation

The turbine bypass system has two modes of operation:

- T_{avg} control mode
- Pressure control mode

The T_{avg} control mode is the normal at-power control mode. The turbine bypass system is regulated by the difference between the measured reactor coolant system average coolant temperature (T_{avg}) and a T_{avg} setpoint derived from turbine first-stage impulse pressure. Two operational modes of the T_{avg} control mode are possible. The first mode is the load rejection steam dump controller, which prevents a large increase in reactor coolant temperature following a large, sudden load decrease. Turbine bypass valve control in conjunction with reactor power control results in a match between reactor power and turbine load. The second mode is the plant trip steam dump controller, which automatically defeats the load rejection steam dump controller following a reactor trip and provides a controlled rate of removal of decay heat, which in turn decreases reactor coolant system T_{avg}.

The pressure control mode is manually selected and is used to remove decay heat during plant startup and cooldown. The difference between steam header pressure and a pressure setpoint is used to control the turbine bypass flow. The pressure setpoint is manually adjustable and is based on the desired reactor coolant system temperature. The turbine bypass system is operated in the pressure control mode when the plant is at no-load and there is no turbine load reference. There are three pressure control operational modes as follows:

- Header pressure – control derived from the difference between header pressure and pressure setpoint

- Cooldown – control derived from the manually selected desired reactor coolant system cooldown rate and the target reactor coolant system temperature

- Manual – control derived from direct use of valve loading signals.

The bypass valves are divided into two banks. The banks are opened sequentially; the second bank starts to open only after a demand signal that is greater than the full-open demand of the first bank is generated.

The turbine bypass valves have two stroke control modes, modulate and trip open/close. If the demand signal is greater than the full open demand for the particular bank of valves, a trip open demand signal is generated. When the demand signal decreases below the full-open demand, the trip open demand clears and the valves return to the modulating mode. Additional description of steam dump logic is given in Section 7.7.

Chapter 15 addresses credible single failures of the turbine bypass system. If the bypass valves fail-open, additional heat load is placed on the condenser. If this load is great enough, the turbine is tripped on high condenser pressure. Ultimate overpressure protection for the condenser is provided by turbine rupture discs. If the bypass valves fail-closed, the power operated relief valves (reference Subsection 10.3.2.2.3) permit controlled cooldown of the reactor.

10.4.4.4 Safety Evaluation

There is no safety-related equipment in the vicinity of the turbine bypass system. The high-energy lines of the turbine bypass system are located in the turbine building.

The failure of a turbine bypass high-energy line will not disable the turbine speed control system. The turbine speed control system is designed in such a manner that its failure will cause a turbine trip. Additional information concerning speed control can be found in Subsection 10.2.2.3.

10.4.4.5 Inspection and Testing Requirements

Before the system is placed in service, turbine bypass valves are tested to verify they function properly. The steam lines are hydrostatically tested to confirm leaktightness. System piping and valves are accessible for inspection. No inservice inspection and testing is required except for the turbine bypass valves which are included in the inservice program as discussed in Subsection 3.9.6.

10.4.4.6 Instrumentation Applications

Turbine bypass controls are described in Section 7.7. Controls in the main control room are provided for selection of the system operating mode. Pressure indication and valve position indication are also provided in the main control room.

10.4.5 Circulating Water System

10.4.5.1 Design Basis

10.4.5.1.1 Safety Design Basis

The circulating water system (CWS) serves no safety-related function and therefore has no nuclear safety design basis.

10.4.5.1.2 Power Generation Design Basis

The CWS supplies cooling water to remove heat from the main condensers. The CWS also supplies cooling water to the turbine building closed cooling water system (TCS) heat exchangers and the condenser vacuum pump seal water heat exchangers under varying conditions of power plant loading and design weather conditions.

10.4.5.2 System Description

10.4.5.2.1 General Description

Classification of components and equipment in the circulating water system is given in Section 3.2.

The CWS and the cooling tower provide a heat sink for the waste heat exhausted from the steam turbine. Additional cooling is supplied from the CWS through a tap in the main supply header for the TCS heat exchangers and the condenser vacuum pump seal water heat exchangers. CWS design parameters are provided in Table 10.4.1-1and Table 10.4.5-1.

The CWS consists of four 25-percent-capacity circulating water pumps, one hyperbolic natural draft cooling tower (NDCT), and associated piping, valves, and instrumentation.

Makeup water to the CWS is provided by the raw water system (RWS). In addition, water chemistry is controlled by a local chemical feed system.

10.4.5.2.2 Component Description

Circulating Water Pumps

The four circulating water pumps are vertical, wet pit, single-stage, mixed-flow pumps driven by electric motors. The pumps are mounted in a pump pit, which is attached to the cooling tower basin. The four pump discharge lines connect to a common header which connects to the two inlet water boxes of the condenser and may also supply cooling water to the TCS and condenser vacuum pump seal water heat exchangers. Each pump discharge line has a motor-operated butterfly valve located between the pump discharge and the main header. This permits isolation of one pump for maintenance and allows for three-pump operation.

Cooling Tower

The hyperbolic NDCT is designed to reject the full-load waste heat to the atmosphere by evaporation as the circulating water passes through the heat exchanger section. The cooling tower is designed to cool the circulating water to 90.6°F based on a design wet bulb temperature of 77°F.

The cooling tower is located approximately 1000 ft. south of the plant and has a basin water level of approximately 219 ft. MSL. Should a cooling tower basin wall break, little, if any, water would reach the plant because of the remote location of the tower and the grading of the site. The height of the cooling tower is approximately 600 ft., thus, there is no potential for the cooling tower to fall and damage safety related structures or components. Because of the remote location, the cooling tower height, and the buoyant rise of the plumes, the plumes will dissipate before they interfere with the SWS cooling towers intake, any plant ventilation intake, or the plant switchyard. Because of the height of cooling tower it is unlikely there will be fogging near the plant as a result of the cooling tower plume.

Cooling Tower Makeup and Blowdown

The circulating water system makeup is provided by the raw water system. In addition, a small portion of Service Water System (SWS) flow is normally diverted to the circulating water system cooling tower basins as blowdown to control the level of solids concentration in the SWS. Makeup to and blowdown from the CWS is controlled by the makeup and blowdown control valves. The makeup control valves maintain the cooling tower basin level. These valves, along with a local chemical feed system, provide chemistry control in the circulating water in order to maintain a noncorrosive, nonscale-forming condition and limit biological growth in CWS components.

Piping and Valves

The underground portions of the CWS piping are constructed of prestressed concrete cylinder pipe (PCCP). The remainder of the piping is carbon steel and is coated internally with a corrosion-resistant compound. The primary drainage path for the condenser water boxes and tube bundles is via gravity to the cooling tower basins using the service water blowdown line (Subsection 9.2.1.2.2). As an alternate, condenser water box drain lines are provided that direct drainage to the turbine building sumps. Motor-operated butterfly valves are provided in each of the circulating water lines at their inlet to and exit from the condenser shell to allow isolation of portions of the condenser. Control valves provide regulation of cooling tower makeup and blowdown.

The circulating water system is designed to withstand the maximum operating discharge pressure of the circulating water pumps. Piping includes the expansion joints, butterfly valves, condenser water boxes, and tube bundles. Due to differences in distance and elevation from the circulating water pumps, CWS components and piping have different design working pressures. The design working pressure rating of each component exceeds the maximum operating discharge pressure developed by the circulating water pumps at the location of each component. The design working pressures for each component are listed below.

Component	Design Working
Steel Pipe	150 psi
PCCP Pipe	100 psi
Expansion Joints	90 psi
Condenser Tube Bundle	90 psi
Water Box	90 psi

Circulating Water Chemical Injection

Circulating water chemistry is maintained by a local chemical feed skid at the CWS cooling tower. Circulating water system chemical feed equipment injects the required chemicals into the circulating water at the CWS cooling tower basin area. This maintains a noncorrosive, nonscale-forming condition and limits the biological film formation that reduces the heat transfer rate in the condenser and the heat exchangers supplied by the circulating water system.

The specific chemicals used within the system are determined by the site water conditions and are monitored by plant chemistry personnel.The chemicals can be divided into six categories based upon function: biocide, algaecide, pH adjuster, corrosion inhibitor, scale inhibitor, and a silt dispersant. The pH adjuster, corrosion inhibitor, scale inhibitor, and dispersant are metered into the system continuously or as required to maintain proper concentrations. The biocide application frequency may vary with seasons. The algaecide is applied, as necessary, to control algae formation on the cooling tower.

The following chemicals are used to control circulating water chemistry:

- Biocide - Sodium hypochlorite, sodium bromide, stabilized bromine
- Algaecide - Biocide treatment is adequate for algae control
- pH Adjuster - No pH adjustment expected to be required at anticipated cycles of concentration
- Corrosion Inhibitor - Proprietary blend of phosphonate, phosphinosuccinic oligomer (PSO) and phosphoric acid
- Scale Inhibitor - Sodium Hexametaphosphate
- Silt Dispersant - Proprietary tagged high-strength polymer

Addition of biocide and water treatment chemicals is performed by local chemical feed injection metering pumps and is adjusted as required. Chemical concentrations are measured through analysis of grab samples from the CWS. Residual chlorine is measured to monitor the effectiveness of the biocide treatment.

10.4.5.2.3 System Operation

The four circulating water pumps take suction from the circulating water pump pit and circulate the water through the tube side of the main condenser, with smaller flows to the TCS, the condenser vacuum pump seal water heat exchangers, and back through the piping discharge network to the NDCT. See Figure 10.4-201. The NDCT cools the circulating water by discharging the water through nozzles in the tower distribution headers. The water is then diffused through fill material to the basin

beneath the tower and, in the process, rejects heat to the atmosphere. Provisions are made during freezing weather to minimize the possibility of ice accumulation.

A 100 percent capacity bypass system has also been provided on the warm water inlet to prevent icing of the fill during a freezing weather start-up. When the tower is started during freezing weather, the warm water flow will bypass the fill into the cold water basin through the bypass line. The bypass is normally used only during plant startup in freezing weather or to maintain CWS temperature above 40°F while operating at partial load during periods of freezing weather.

The raw water system supplies makeup water to the cooling tower basin to replace water losses due to evaporation, wind drift, and blowdown. A separate connection is also provided between the RWS and CWS to fill the CWS piping.

A condenser tube cleaning system is installed to clean the circulating water side of the main condenser tubes. Blowdown from the CWS is taken from the discharge of the CWS pumps and is discharged to the plant outfall.

The circulating water system is used to supply cooling water to the main condenser to condense the steam exhausted from the main turbine. If the circulating water pumps, the cooling tower, or the circulating water piping malfunction such that condenser backpressure rises above the maximum allowable value, the main condenser will no longer be able to adequately support unit operation. Cooldown of the reactor may be accomplished by using the power-operated atmospheric steam relief valves or safety valves rather than the turbine bypass system when the condenser is not available.

Passage of condensate from the main condenser into the circulating water system through a condenser tube leak is not possible during power generation operation, since the circulating water system operates at a greater pressure than the condenser.

Turbine building closed cooling water in the TCS heat exchangers is maintained at a higher pressure than the circulating water to prevent leakage of the circulating water into the closed cooling water system.

Cooling water to the condenser vacuum pump seal water heat exchangers is supplied from the circulating water system. Cooling water flow from the circulating water system is normally maintained through all four heat exchangers to facilitate placing the spare condenser vacuum pump in service. Isolation valves are provided for the condenser vacuum pump seal water heat exchanger cooling water supply lines to facilitate maintenance.

Small circulating water system leaks in the turbine building will drain into the waste water system. Large circulating water system leaks due to pipe failures will be indicated in the control room by a loss of vacuum in the condenser shell. The effects of flooding due to a circulating water system failure, such as the rupture of an expansion joint, will not result in detrimental effects on safety-related equipment since there is no safety-related equipment in the turbine building and the base slab of the turbine building is located at grade elevation. Water from a system rupture will run out of the building through a relief panel in the turbine building west wall before the level could rise high enough to cause damage. Site grading will carry the water away from safety-related buildings.

The cooling tower is located so that collapse of the tower has no potential to damage equipment, components, or structures required for safe shutdown of the plant.

10.4.5.3 Safety Evaluation

The circulating water system has no safety-related function and therefore requires no nuclear safety evaluation.

10.4.5.4 Tests and Inspections

Components of the circulating water system are accessible as required for inspection during plant power generation. The circulating water pumps are tested in accordance with standards of the Hydraulic Institute. Performance, hydrostatic, and leakage tests associated with preinstallation and preoperational testing are performed on the circulating water system. The system performance and structural and leaktight integrity of system components are demonstrated by continuous operation.

10.4.5.5 Instrumentation Applications

Instrumentation provided indicates the open and closed positions of motor-operated butterfly valves in the circulating water piping.The motor-operated valve at each pump discharge is interlocked with the pump so that the pump trips if the discharge valve fails to reach the full-open position shortly after starting the pump.

Local grab samples are used to periodically test the circulating water quality to limit harmful effects to the system piping and valves due to improper water chemistry.

Pressure indication is provided on the circulating water pump discharge lines.A differential pressure transmitter is provided between one inlet and outlet branch to the condenser. This differential pressure transmitter is used to determine the frequency of operating the condenser tube cleaning system (CES).

Temperature indication is supplied on the common CWS inlet header to the TCS heat exchanger trains.This temperature is also representative of the inlet cooling water temperature to the main condenser.

A flow element is provided on the common discharge line from the TCS heat exchangers to allow monitoring of the total flow through the TCS heat exchangers.Flow measurement for the raw water makeup to the cooling tower and for the cooling tower blowdown is also provided.

Level instrumentation provided in the circulating water pump intake structure activates makeup flow from the RWS to the cooling tower basin when required. Level instrumentation also annunciates a low-water level in the pump structure and a high-water level in the cooling tower basin.

The circulating water chemistry is controlled by regulating cooling tower blowdown and by chemical addition, to maintain the circulating water with an acceptable Langelier Index and is maintained in range established by plant chemistry personnel. The system accomplishes this by regulating the blowdown valve. This regulation causes the tower basin water level to fluctuate. The fluctuation is sensed by a level controller that operates the makeup valve to the cooling tower basin.

The control approach is to allow the makeup water to concentrate naturally to its upper limit. Provisions are made to add chemicals for pH control.

The cycles of concentration at which the cooling tower is operated is dependent on the quality of the cooling tower makeup water.Cooling tower blowdown is discharged to the Savannah River via the waste water system.

Monitoring of the circulating water system is performed through the data display and processing system. Control functions are performed by the plant control system. Appropriate alarms and displays are available in the control room. See Chapter 7.

10.4.6 Condensate Polishing System

The condensate polishing system (CPS) can be used to remove corrosion products and ionic impurities from the condensate system during plant startup, hot standby, power operation with abnormal secondary cycle chemistry, safe shutdown, and cold shutdown operations.

10.4.6.1 Design Basis

10.4.6.1.1 Safety Design Basis

The condensate polishing system serves no safety-related function and therefore has no nuclear safety-related design basis.

10.4.6.1.2 Power Generation Design Basis

The power generation design bases are to:

- Remove corrosion products, dissolved solids and other impurities from the condensate system and maintain a noncorrosive environment within the condensate, feedwater and steam generator systems
- Provide polishing capacity for processing one-third of the maximum condensate flow in a sidestream arrangement
- Provide polishing capability during normal startup and shutdown operations of the plant
- Provide for plant operation with a “continuous” condenser tube leak of .001 gpm or a “faulted” leak of 0.1 gpm until repairs can be completed or until an orderly shutdown is achieved

10.4.6.2 System Description

The condensate polishing system is used during operating modes of startup, hot standby, power operation with abnormal secondary cycle chemistry, safe shutdown, and cold shutdown. Classification of components in the CPS is identified in Section 3.2. The major components for the condensate polishing system are described below. The condensate polishing system is shown in Figure 10.4.6-1.

Deep Bed Mixed Resin Polisher

The polisher vessel is constructed of carbon steel with a protective rubber lining on the inside of the vessel. Leachable sulphur of the rubber lining is less than 20 ppb. Level indication (site glass) is provided.

Resin Trap

The resin trap is located in the effluent piping of the vessel. Differential pressure across the trap is monitored.

Spent Resin Tank

The spent resin tank is constructed of carbon steel with an interior protective rubber lining. It is used for storage of exhausted or spent resin prior to shipping offsite for regeneration or disposal.

Resin Addition Hopper and Eductor

The resin addition hopper stores regenerated or new resin and the eductor is used to inject resin into the polisher vessel. The hopper is constructed of carbon steel. The eductor uses demineralized water to transfer the resin to the vessel.

10.4.6.3 System Operation

The condensate polishing system cleans up the condensate during startup to meet condensate and feedwater system water chemistry specifications as described in Subsection 10.3.5. The condensate system is recirculated to the hotwell during startup until the desired water quality is attained. Condensate system startup operation is described in Subsection 10.4.7. Utilization of the condensate polishing system during startup assists in minimizing the startup duration of the plant.

During power operation, the condensate polishers are used only when abnormal secondary cycle conditions exist. This allows for continued operation of the plant with a “continuous” condenser tube leak of 0.001 gpm or a “faulted” leak of 0.1 gpm until repairs can be made or until an orderly shutdown is achieved. The condensate polisher flow is controlled by the condensate polisher bypass valve.

Exhausted or spent resin is removed from the vessel and replaced with new or regenerated resin. Resin replacement requires the polisher vessel to be out of service. Spent resin is transferred directly from the polisher vessel to a truck or to the spent resin tank until it can be removed offsite. Spent condensate polishing resin will normally be nonradioactive and not require any special packaging prior to disposal. In the event of radioactive contamination of the resin in a vessel, temporary shielding is installed (if required). Radioactive resin is transferred directly from the condensate polishing vessel or from the spent resin tank to a temporary processing unit. Radiation monitors associated with the steam generator blowdown system, the steam generator system (main steam), and the turbine island vents, drains and relief system provide the means to determine if the secondary side is radioactively contaminated. Subsection 11.4.2 describes waste management of radioactively contaminated resin. A spill containment barrier is provided to contain spent resin tank or condensate polisher vessel contents in the event of a tank failure. The spill containment barrier is a curb surrounding the area containing the spent resin tank and condensate polisher vessel with sufficient height to contain the contents of a full tank or vessel.

The procedures for radiation protection and the handling and processing of radwaste are addressed in Chapters 11 and 12. Shielding design is described in Section 12.3.

Upon removal of the exhausted resin from the polisher vessel, the vessel is rinsed and the new resin is placed in the vessel using the resin addition hopper and eductor. After the new cation and anion resins are placed in the vessel, demineralized water is added until the water level is just above the resin bed. Compressed air from the plant service air system is injected up through the resin bed to fluidize and thoroughly mix the resins. Prior to plant startup, a new resin bed is rinsed and resin performance is verified, with flow through the vessel discharged to the waste water system. The polisher vessel is then placed in operation or on standby.

10.4.6.4 Safety Evaluations

The condensate polishing system has no safety-related function and therefore requires no nuclear safety evaluation.

10.4.6.5 Tests and Inspections

The condensate polishing system is operationally checked prior to plant startup to verify proper functioning of the polisher vessels and associated instrumentation and controls.

10.4.6.6 Instrument Applications

When the condensate polishing system is in service, polishing system differential pressure instrumentation provides a control signal to the condensate bypass valve which maintains sufficient flow through the polisher vessel for optimum performance. The polisher is removed from service when: 1) a high differential pressure exists across the polisher vessel, 2) the ion exchange resin capacity becomes exhausted as evidenced by a high effluent conductivity, or 3) at the completion of a pre-determined volume through-put. The resin trap is monitored for high differential pressure and an alarm indicates the need to backwash the trap.

10.4.7 Condensate and Feedwater System

The condensate and feedwater system provides feedwater at the required temperature, pressure, and flow rate to the steam generators. Condensate is pumped from the main condenser hotwell by the condensate pumps, passes through the low-pressure feedwater heaters to the feedwater pumps, and is then pumped through the high-pressure feedwater heaters to the steam generators.

The condensate and feedwater system is composed of components from the condensate system (CDS), main and startup feedwater system (FWS), and steam generator system (SGS). The startup feedwater system is described in Subsection 10.4.9.

10.4.7.1 Design Basis

10.4.7.1.1 Safety Design Basis

The safety-related portion of the system is required to function following a design basis accident (DBA) to provide containment and feedwater isolation, as discussed below, for the main lines routed into containment.

The portion of the feedwater system from the steam generator inlets outward through the containment up to and including the main feedwater isolation valves (MFIVs) is constructed in accordance with the requirements of ASME Code, Section III for Class 2 components and is designed to seismic Category I requirements. The portion of the feedwater system from the main feedwater isolation valve (MFIV) inlets to the piping restraints at the interface between the auxiliary building and the turbine building is constructed in accordance with the requirements of ASME Code, Section III for Class 3 components and is designed to seismic Category I requirements.

The system provides redundant isolation valves, as described below, for the main feedwater lines routed into containment. The isolation valves close after receipt of an isolation signal in sufficient time to limit the mass and energy release to containment consistent with the containment analysis presented in Chapter 6.

- The safety-related portions of the feedwater system are designed to remain functional after a safe shutdown earthquake (SSE) and to perform their intended function of isolating feedwater flow following postulated events.

- The safety-related portions of the feedwater system are protected from wind and tornado effects, as described in Section 3.3; flood protection is described in Section 3.4; missile protection is described in Section 3.5; protection against dynamic effects associated with the postulated rupture of piping is described in Section 3.6; seismic protection is described in Section 3.7; environmental design is described in Section 3.11; and fire protection is described in Section 9.5.

- The portion of the feedwater system to be constructed in accordance with ASME Code, Section III, Class 2 requirements is provided with access to welds and removable insulation for inservice inspection, in accordance with ASME Code, Section XI. The portion of the feedwater system to be constructed in accordance with ASME Code, Section III, Class 3 requirements is also designed and configured to accommodate inservice inspection in accordance with ASME Code, Section XI.

- The condensate and feedwater system classification is described in Section 3.2. The control functions and power supplies are described in Chapters 7 and 8.

- For a main feedwater or main steam line break (MSLB) inside the containment, the condensate and feedwater system is designed to limit high energy fluid to the broken loop. High energy line break for piping not qualified for leak before break (LBB) criteria is discussed in Subsection 3.6.3.

- Double valve main feedwater isolation is provided via the main feedwater control valve (MFCV) and main feedwater isolation valve (MFIV). Valves fail closed on loss of actuating fluid. Both valves are designed to close automatically on main feedwater isolation signals, an appropriate engineered safety features (ESF) isolation signal, within the time established within the Technical Specification, Section 16.1.

- The MFCVs provide backup isolation to their respective containment isolation valves in order to terminate feedwater flow. The MFCVs are located in the auxiliary building in piping designed to ASME Code, Section III, Class 3 seismic Category I requirements. These valves are components of the steam generator system (SGS).

- For a steam generator tube rupture event, positive and redundant isolation is provided for the main feedwater system (MFIV and MFCV) with ESF isolation signals generated by the protection and safety monitoring system.

10.4.7.1.2 Power Generation Design Basis

- The condensate and feedwater system provides a continuous feedwater supply to the two steam generators at the required pressures and temperatures for steady-state and anticipated transient conditions.

- Plant operation is possible at 100-percent power with one condensate pump out of service, and approximately 70-percent power with one booster/main feedwater pump assembly out of service.

- Plant operation is possible at greater than 70-percent power with one feedwater heater string out of service.

- The feedwater and condensate pumps and pump control system are designed so that loss of one booster/main feedwater pump assembly or one condensate pump does not result in trip of the turbine-generator or reactor.

- The pumps and other system components are designed so that the condensate, feedwater booster and feedwater pumps are protected from running with very low net positive suction heads without tripping on short transient low levels in a hotwell or deaerator tank.

- The condenser hotwell is designed to store, at the normal operating water level, an amount of condensate equivalent to at least three minutes of full-load condensate system operating flow.

- The system is able to accommodate ten-percent step or five-percent per minute ramp load changes without significant deviation from the programmed water levels in the steam generators or major effect on the feedwater system.

- The system has the capability of accommodating the necessary changes in feedwater flow to the steam generators with the steam pressure increase resulting from a 100-percent load rejection.

- The booster/main feedwater pumps are tripped simultaneously with the feedwater isolation signal to close the main feedwater isolation valves. In addition, the same isolation signal closes the isolation valve in the cross connect line between the main feedwater pump discharge header and the startup feedwater pump discharge header.

- A check valve, which acts on reverse pressure differential, is provided in the main feedwater line to each steam generator between the MFIV and the containment penetration. The check valve is designed to withstand the forces encountered when closing after a main feedwater line rupture. The valves perform no safety-related function but will serve to prevent blowdown from more than one steam generator during feedline break while the appropriate engineered safety features signal is generated to isolate using the MFIV and MFCV. During normal or upset conditions, the function of these check valves is to prevent reverse flow from the steam generators whenever the feedwater system is not in operation.

10.4.7.2 System Description

10.4.7.2.1 General Description

The condensate and feedwater system is shown schematically in Figure 10.4.7-1, and in Figure 10.3.2-1. Classification of equipment and components is given in Section 3.2.

The condensate and feedwater system supplies the steam generators with heated feedwater in a closed steam cycle using regenerative feedwater heating. The condensate and feedwater system is composed of the condensate system, the main feedwater system, and portions of the steam generator system. The condensate system collects condensed steam from the condenser and pumps condensate forward to the deaerator. The feedwater system takes suction from the deaerator and pumps feedwater forward to the steam generator system utilizing high-pressure main feedwater pumps. The steam generator system contains the safety-related piping and valves that deliver feedwater to the steam generators. The condensate and feedwater systems are located within the turbine building, and the steam generator system is located within the auxiliary building and containment.

The main portion of the feedwater flow originates from condensate pumped from the main condenser hotwell by the condensate pumps. The main condenser hotwell receives makeup from the condensate storage tank. (Refer to Subsection 9.2.4 for a description of the condensate storage system.) The condensate passes in sequence through: the condensate polishing system or condensate polishing bypass (described in Subsection 10.4.6); the gland steam condenser; three strings of low-pressure heaters, each string consisting of a No. 1 and No. 2 low-pressure heater; two strings of low-pressure heaters No. 3 and No. 4; the No. 5 open low pressure heater (deaerator); the three parallel booster/main feedwater pumps; and two strings of high-pressure heaters, No. 6 and No. 7. Feedwater is pumped to the plant's two steam generators through each generator's respective flow element, control valve, feedwater isolation valve, and check valve. The balance of the plant's feedwater flow is provided by drains from the main steam system moisture separator reheater, drains from the No. 6 and No. 7 feedwater heaters, and steam condensed in the deaerator. These flows are collected in the deaerator and pumped forward in the feedwater cycle. A portion of the condensate

flow downstream of the condensate polishers is diverted to provide cooling to the steam generator blowdown system heat exchangers before returning to the main condensate flow at the deaerator.

During plant startup, three recirculation paths facilitate system cleanup and adjustment of water quality prior to initiating feed to the steam generators. These cleanup loops are designed for approximately 33 percent of design condensate flow and include a hotwell recirculation loop, a deaerator recirculation loop, and a third recirculation loop from downstream of the No. 7 feedwater heaters. Steam is provided to the deaerating feedwater heater from the auxiliary steam supply system to preheat the feedwater to over 200°F during the initial cleanup and startup recirculation operations. This preheating action, along with chemical addition, minimizes formation of iron oxides in the condensate system.

The condensate polishing system is described in Subsection 10.4.6 and may be in service or bypassed. Each of the two main feedwater lines to the two steam generators contains a feedwater flow element, a main feedwater control valve, a main feedwater isolation valve, and a check valve.

The turbine island chemical feed system (CFS) described in Subsection 10.4.11 is provided to inject an oxygen scavenging agent and a pH control agent into the condensate pump discharge downstream of the condensate polishers and an oxygen scavenging agent and pH control agent upstream of the feedwater booster pump suction. Injection points are shown in Figure 10.4.7-1. During normal power operation, the addition of an oxygen scavenging agent and pH control agent to the condensate system downstream of the condensate demineralizers is in automatic control, with manual control available. The added chemicals control pH according to the condensate and feedwater system chemistry requirements and establish an oxygen scavenging agent residual in the feedwater system. The oxygen scavenger agent is hydrazine and the pH control agent is methoxypropylamine (MPA). During shutdown conditions, carbohydrazide may be used in place of hydrazine.

Oxygen scavenging and ammoniating agents are selected and utilized for plant secondary water chemistry optimization following the guidance of NEI-97-06, "Steam Generator Program Guidelines" (Reference 201). The EPRI Pressurized Water Reactor Secondary Water Chemistry Guidelines are followed as described in NEI 97-06.

A cross connection from the main feedwater pump discharge header to the startup feedwater header allows any booster/main feedwater pump to supply feedwater to the startup feedwater control valves. The startup feedwater system is described in Subsection 10.4.9. Thus, feedwater from the deaerator storage tank can be supplied by the booster/main feedwater pumps through the startup feedwater connections to the steam generators during hot standby, plant startup and low power operation. A check valve in the cross connection piping prevents the startup feedwater pumps from supplying the main feedwater header, and a nonsafety-related isolation valve in the cross connection piping automatically closes upon the feedwater isolation signal that trips the main feedwater pumps.

A condensate and feedwater failure analysis for safety-related components is presented in Table 10.4.7-1. Occurrences which produce an increase in feedwater flow or decrease in feedwater temperature result in increased heat removal from the reactor coolant system which is compensated for by control system action, as described in Subsection 10.4.7.5. Events which produce the opposite effect (i.e., decreased feedwater flow or increased feedwater temperature) result in reduced heat transfer in the steam generators. Normally, automatic control system action is available to adjust feedwater flow to prevent excess energy accumulation in the reactor coolant system, and the increasing reactor coolant temperature provides a negative reactivity feedback, reducing reactor power. In the absence of normal control action, either the high-outlet temperature or the high-pressure trips of the reactor protection system are available to provide reactor safety. Loss of all feedwater is examined in Section 15.3.

Refer to Subsection 5.4.2.2 for a description of steam generator design features to prevent fluid flow water hammer. The main feedwater connection on each of the steam generators is the highest point of each feedwater line downstream of the MFIV. The feedwater lines contain no high-point pockets that could trap steam and lead to water hammer. The horizontal pipe length from the main nozzle to the downward turning elbow of each steam generator is minimized.

Operations and maintenance procedures include precautions, when appropriate, to minimize the potential for steam and water hammer, including:

- Prevention of rapid valve motion
- Process for avoiding introduction of voids into water-filled lines and components
- Proper filling and venting of water-filled lines and components
- Process for avoiding introduction of steam or heated water that can flash into water-filled lines and components
- Cautions for introduction of water into steam-filled lines or components
- Proper warmup of steam-filled lines
- Proper drainage of steam-filled lines
- The effects of valve alignments on line conditions

10.4.7.2.2 Component Description

The feedwater system is constructed in accordance with the requirements of ASME Code, Section III for Class 2 components and seismic Category I requirements from the steam generator out through the MFIVs. From upstream of the MFIV to the restraint at the interface between the auxiliary building and turbine building, the system is constructed in accordance with ASME Code, Section III for Class 3 components and seismic Category I requirements. The remaining piping of the condensate and feedwater system meets ANSI B31.1 requirements. Safety-related feedwater piping materials are described in Subsection 10.3.6.

Feedwater Piping

Feedwater is supplied to each of the two steam generators by a main feedwater line during normal operation. Each of the lines is anchored at the auxiliary building/turbine building interface, and has sufficient flexibility to provide for relative movement of the steam generators resulting from thermal expansion.

The feedwater system and steam generator design minimize the potential for waterhammer and subsequent effects. Details are provided in Subsection 5.4.2.2. Feedwater piping analysis considers the following factors and events in the evaluation:

- Steam generators with top feed ring design (BTP ASB 10-2)
- Main feedwater check valves due to line breaks (BTP MEB 3-1)
- Spurious isolation or feedwater control valve trips
- Pump trips
- Deaerator regulating flow control valve trip
- Local feedwater piping, anchors, supports, and snubbers, as applicable

Feedwater Isolation Valves

One MFIV is installed in each of the two main feedwater lines outside the containment and downstream of the feedwater control valve. The MFIVs are installed to prevent uncontrolled blowdown from the steam generators in the event of a feedwater pipe rupture. The main feedwater check valve provides backup isolation. In the event of a secondary side pipe rupture inside the containment, the MFIVs limit the quantity of high energy fluid that enters the containment through the broken loop and limit cooldown. The MFCV provides backup isolation to limit cooldown and high energy fluid addition.

Each MFIV is a bidirectional wedge type gate valve composed of a valve body that is welded into the system pipeline. The MFIV gate valve is provided with a hydraulic/pneumatic actuator. The valve actuator is supported by the yoke, which is attached to the top of the body. The valve actuator consists of a hydraulic cylinder with a stored energy system to provide emergency closure of the isolation valve. The energy to operate the valve is stored in the form of compressed nitrogen contained in one end of the actuator cylinder. The MFIV is maintained in a normally open position by high-pressure hydraulic fluid. For emergency closure, redundant solenoids are energized resulting in the high-pressure hydraulic fluid being dumped to a fluid reservoir.

The feedwater isolation functional diagram is shown in Figure 7.2-1. To provide safety function actuation, the redundant actuation solenoid valves are powered from separate Class 1E power divisions. Redundant control and indication channels are provided for each of the isolation valves. Provisions are made for inservice inspection of the isolation valves.

Feedwater Control Valves

The MFCVs are air-operated control valves with the dual purpose of controlling feedwater flow rate as well as providing backup isolation of the feedwater system. The valve body is a globe design. Seats and trim are of an erosion resistant material. The design allows for removal and replacement of seats and other wearing parts.

The feedwater control valves (MFCVs) automatically maintain the water level in the steam generators during operational modes. Positioning of the main feedwater control valve during normal operation is the function of an automatic feedwater level control system using a refinement of a standard three element control scheme. The three-element control system maintains feedwater flow equal to the steam flow, and steam generator water level is used as an input to trim feedwater flow and maintain programmed water level. Refinements on the standard control are made by varying the flow demand of the valve based on the actual stem position.

In the event of a secondary side pipe rupture inside the containment, the main feedwater control valves provide a redundant isolation to the MFIVs to limit the quantity of high energy fluid that enters the containment through the broken loop. For emergency closure of the MFCV, a solenoid is deenergized to close the valve in sufficient time to limit the mass and energy release to containment consistent with the containment analysis presented in Chapter 6.

Feedwater Check Valves

Each main feedwater line includes a check valve installed outside containment. During normal and upset conditions, the check valve prevents reverse flow from the steam generator whenever the feedwater pumps are tripped. In addition, the closure of the valves prevents more than one steam generator from blowing down in the event of feedwater pipe rupture. The check valve is designed to limit blowdown from the steam generator and to prevent slam resulting in potentially severe pressure surges due to water hammer. The valves are designed to withstand the closure forces encountered during the normal, upset and faulted conditions. Rapid closure associated with a feedline rupture does not impose unacceptable loads on the steam generator or the steam generator system. The closure of the valves provides for isolation of the steam generators in the event of a feedwater line

break to prevent blowdown from both steam generators. The valves are seismic Category I, ASME Code, Section III, Class 2 valves.

Plant Main Condenser

For a description of main condenser, refer to Subsection 10.4.1.

Condensate Pumps

The three 50-percent, vertical, multistage, centrifugal condensate pumps are motor-driven and operate in parallel. Valving allows individual pumps to be removed from service. Pump capacity meets normal, full-power requirements with two of the three pumps in operation.

Condensate Regulating Valves

The main condensate flow to the deaerator is regulated by two parallel, split-ranged, pneumatically operated control valves. Condensate is regulated to maintain the level in the deaerator storage tank. During startup and low loads, the smaller valve modulates to control flow while the larger valve remains closed. As load increases, the larger valve modulates to control flow.

Low-Pressure Feedwater Heaters

These heaters are shell and tube heat exchangers with the heated condensate flowing through the tube side and the extraction steam condensing on the shell side. Parallel strings of low-pressure feedwater heaters No. 1 and 2 are located in each of three condenser necks. Feedwater heaters No. 3 and 4 are also parallel strings of heaters. The closed low-pressure feedwater heaters use drain coolers. The cascaded drains from the heaters are dumped to their respective condenser shell.

A drain line from the heater allows direct discharge of the heater drains to the condenser in the event the normal drain path is not available or flooding occurs in the heater.

The low-pressure feedwater heater shells are carbon steel, and the tubes are stainless steel.

Deaerator

The deaerator is a tray type, horizontal shell, direct contact heater with a horizontal storage tank. Condensate enters the deaerator from the top. The heating steam flows upward and is condensed, and raises the temperature of the condensate to near saturation, liberating dissolved gases from the condensate. Condensate drains from the deaerator into the storage tank. Noncondensables are vented from the top of the deaerator and flow through an orifice and valve assembly to the main condenser.

Auxiliary steam from the auxiliary steam supply system (see Subsection 10.4.10) is supplied to the deaerator during recirculation conditions and maintains the pressure in the tank above atmospheric. The steam heats the condensate during cleanup and recirculation for liberation of noncondensables. Auxiliary steam is also automatically supplied to the deaerator following turbine trip to assist in maintaining deaerator pressure above atmospheric.

The shell of the deaerator storage tank is carbon steel. Most of the internals of the deaerator, including the tray assemblies, vent condenser, and spray valves, are stainless steel.

A high level dump line and control valve provide overflow protection to the deaerator storage tank. During high level conditions, water from the deaerator storage tank is drained to the main condenser.

High-Pressure Feedwater Heaters

The main feedwater pumps discharge into a parallel string of No. 6 and No. 7 high-pressure feedwater heaters. These heaters are shell and tube heat exchangers. Heated feedwater flows through the tubes and extraction steam condenses in the shell. The No. 6 and No. 7 heaters drain into low-pressure heater No. 5 (deaerator).

A drain line from each heater allows direct discharge of the heater drains to the condenser in the event the normal drain path is not available or flooding occurs in the heater.

The high-pressure feedwater heater shells are carbon steel, and the tubes are stainless steel.

Feedwater Booster Pumps

The feedwater booster pumps are horizontal, centrifugal pumps located upstream of the main feedwater pumps. Each feedwater booster pump takes suction from the deaerator storage tank and pumps forward to its associated main feedwater pump. An electric motor drives both the booster pump and the main feedwater pump. The booster pump is driven by one end of the motor shaft and the main pump is driven by the other end through a mechanical speed increaser. The booster pump, operating at a lower speed than the main feedwater pump, boosts the pressure of feedwater from the deaerator to meet the net positive suction head requirements of the main feedwater pump.

Main Feedwater Pumps

The three main feedwater pumps operate in parallel and take suction from the associated feedwater booster pumps. The combined discharge from the main feedwater pumps is supplied to the No. 6 high-pressure feedwater heater, the No. 7 high-pressure feedwater heater, and then to the steam generator system. Each main feedwater pump is a horizontal, centrifugal pump driven, through a mechanical speed increaser, by the motor that drives the associated feedwater booster pump.

Isolation valves allow each of the booster/main feedwater pumps to be individually removed from service while continuing power operations at reduced capacity.

Pump Recirculation Systems

Minimum flow control systems automatically protect the pumps in the condensate and feedwater system from pumping below the minimum flow rate to prevent pump damage. The condensate pumps recirculate to the main condenser. The booster/main feedwater pumps recirculate to the deaerator storage tank.

10.4.7.2.3 System Operation

10.4.7.2.3.1 Plant Startup

During plant startup, the condensate and feedwater system operates in several different configurations. These are described in Subsections 10.4.7.2.3.1.1 through 10.4.7.2.3.1.4.

10.4.7.2.3.1.1 Hotwell Recirculation

The hotwell recirculation flow path is used to recirculate flow from downstream of the gland steam condenser to the main condenser to facilitate cleanup of the condensate inventory in the main condenser hotwell. This flow path also provides a minimum flow for operation of the gland steam condenser and the condensate pumps. With a condensate pump operating, the setpoint of the recirculation valve is manually adjusted to achieve the desired flow rate for cleanup of condensate. Condensate polishing equipment is aligned and placed in service to attain the required water quality.

The hotwell recirculation valve is placed in automatic operation when minimum flow is required only for operation of the gland steam condenser and one or two condensate pumps. The recirculation valve automatically maintains the minimum flow and closes when system flow to the deaerator exceeds the required minimum. The recirculation valve remains on standby and opens, as necessary, if system flow drops below minimum.

Once the hotwell recirculation loop is placed in service and cooling is available to the gland steam condenser, sealing steam may be applied to the turbine glands. Condenser vacuum can then be drawn using condenser air removal equipment.

10.4.7.2.3.1.2 Deaerator Recirculation

The deaerator recirculation flow path is used to recirculate condensate from downstream of the deaerator storage tank to the main condenser to facilitate cleanup of condensate. Deaerator recirculation is initiated by adjusting the recirculation flow control valve from the main control room to achieve the desired flow rate. Condensate is recirculated for cleanup of water quality using the condensate polishing equipment. Auxiliary steam can be admitted to the deaerator to heat the condensate for liberation of noncondensable gases.

10.4.7.2.3.1.3 Third Stage Recirculation

The third stage of condensate/feedwater recirculation during the plant heatup cycle can begin when condensate and feedwater has been sufficiently cleaned and deaerated at the feedpump suction. Flow is initiated by adjusting the recirculation flow control valve from the main control room to achieve the desired flow rate. Feedwater is recirculated from downstream of the No. 7 feedwater heaters to the main condenser for cleanup and deaeration of the condensate and feedwater inventory.

10.4.7.2.3.1.4 Plant Heatup

The condenser hotwell makeup and overflow valves are enabled and function automatically during the plant heatup cycle to maintain condensate inventory. Condensate is returned to the condensate storage tank as volume expansion occurs, and makeup occurs as needed for system losses.

During heatup, the main condenser is available to accept turbine bypass steam from the main steam system, as well as various drains, vents, and condensate/feedwater recirculation flow. Noncondensable gases are removed in the air removal sections of the main condenser and through the deaerator vents. Control and monitoring of water quality and chemistry are accomplished by operation of the condensate polishing equipment, chemical feed system, and secondary sampling equipment as required.

The steam generators are filled, as required, either by the startup feedwater pumps using water from the condensate storage tank, or alternatively by a booster/main feedwater pump using water from the deaerator storage tank and supplied through cross connect piping to the startup feedwater control valves. The steam generators are drained, as required, through the steam generator blowdown system.

During the initial stages of plant heatup, one condensate pump operates as necessary to maintain level in the deaerator storage tank. Either one or both startup feedwater pumps, or one booster/main feedwater pump, is in operation when feeding water to the steam generators. The feedwater pumps in use operate on minimum flow recirculation as necessary while maintaining the water level of the steam generators.

Feedwater is controlled by the startup feedwater control valves (SFCVs) which are operated either manually from the control room or automatically in accordance with steam generator level demand.

Condensate flow to the steam generator blowdown heat exchangers is controlled during plant heatup to obtain the necessary cooling to the blowdown stream. Any excess level in the deaerator storage tank is drained to the main condenser through the deaerator high level dump flow path.

10.4.7.2.3.2 Power Operation

One operating condensate pump supplies sufficient condensate flow to the deaerator during initial power operation and at low-power levels. As power escalates, a second condensate pump is started prior to exceeding approximately 50-percent, full-load condensate flow. The third condensate pump is in standby.

The condensate regulating valves to the deaerator automatically maintain the level of the deaerator storage tank. If condensate flow to the deaerator drops below the minimum required flow for operation of the gland steam condenser or the condensate pumps, the hotwell recirculation valve to the condenser opens to provide the minimum flow.

Noncondensables are removed by the deaerating section of the main condenser and by the deaerator. Condensate polishing, chemical feed and condensate sampling are performed, as needed, to maintain water quality.

For normal operating conditions between 0- and 100-percent load, system operation is primarily automatic. Automatic level control systems control the water levels in the feedwater heaters and the condenser hotwell. Feedwater heater water levels are controlled by modulating flow control valves. Level control valves in the makeup line to the condenser from the condensate storage tank and in the return line to the condensate storage tank control the level in the condenser hotwell.

During reactor startup and at very low power levels, feedwater is supplied to the steam generators through the startup feedwater control valves using either the startup feedwater pumps drawing from the condensate storage tank, or a booster/main feedwater pump drawing from the deaerator storage tank. Refer to Subsection 10.4.9 for a description of the startup feedwater system. If the startup feedwater pumps are initially in use, transfer is made to a booster/main feedwater pump prior to exceeding the capacity limit of the startup pumps. As power increases, startup feedwater continues to be supplied through the startup feedwater control valves until control of feedwater is automatically transferred from the startup feedwater control valves to the main feedwater control valves. The startup feedwater control valves close, and the main feedwater control valves open to supply main feedwater to the steam generators and maintain steam generator level. Position indication is available in the main control room for the main and startup feedwater control valves. As power escalates, booster/main feedwater pump minimum flow recirculation automatically decreases as the forward flow to the steam generators increases. The second and third booster/main feedwater pumps are brought into operation as required.

Condensate flow to the steam generator blowdown heat exchangers is normally automatically controlled. In the automatic mode, condensate flow is regulated to control the steam generator blowdown outlet temperature from the blowdown heat exchangers.

Ten-percent step load and 5-percent/minute ramp changes are accommodated without major effect to the condensate and feedwater system. The system is capable of providing the necessary feedwater flow to the steam generators with the steam pressure increase resulting from a 100-percent load rejection.

10.4.7.2.3.3 Plant Shutdown

Operation during power descent is largely the reverse of power ascent. As power is decreased, one of the two operating condensate pumps may be stopped; one or two booster/main feedwater pumps

may be stopped as well. At low feedwater flow, control of feedwater is automatically transferred from the main feedwater control valves to the startup feedwater control valves.

Following reactor trip or other reactor shutdown, feedwater is supplied through the startup feedwater control valves to maintain steam generator inventories. Decay heat and sensible heat are removed by steam release via the steam dump system to the condenser to cool the plant and bring it to safe shutdown. During this time, startup feedwater is supplied either by an operating booster/main feedwater pump drawing from the deaerator storage tank, or by the startup feedwater pumps drawing from the condensate storage tank.

10.4.7.2.3.4 Emergency Operation

In the event of a design basis event (with or without normal ac power supplies available), feedwater isolation signals are generated as required. The MFIVs and MFCVs automatically close on receipt of the isolation signals. The condensate and feedwater system is not required to supply feedwater under accident conditions to effect plant shutdown or to mitigate the consequences of an accident. However, the startup feedwater system is expected to be available as a nonsafety-related system to provide a source of feedwater for the steam generators. Also, the condenser may be available to accept turbine bypass steam for secondary side heat removal. Coordinated operation of the startup feedwater system (Refer to Subsection 10.4.9), if available, and the main steam supply system (Refer to Section 10.3) removes the primary loop sensible heat and reactor decay heat.

10.4.7.3 Safety Evaluation

- The safety-related portions of the main feedwater system are located in the containment and auxiliary buildings. These buildings are designed to withstand the effects of earthquakes, tornadoes, hurricanes, floods, external missiles, and other natural phenomena. Sections 3.3, 3.4, 3.5, 3.7, and 3.8 provide the bases for the adequacy of the structural design of these buildings.

- The safety-related portions of the main feedwater system are designed to remain functional after a design basis earthquake. Subsection 3.7.2 and Section 3.9 provide the design loading conditions that are considered. Sections 3.5, 3.6, and Subsection 9.5.1 describe the analyses to provide confidence that a safe shutdown, as outlined in Section 7.4, is achieved and maintained.

- The main feedwater system safety-related functions are accomplished by redundant means. A single, active component failure of the safety-related portion of the system does not compromise the safety function of the system. Table 10.4.7-1 provides a failure analysis of the safety-related active components of the feedwater system. Power is supplied from onsite power systems, as described in Chapter 8.

- Preoperational testing of the safety-related portion of the condensate and feedwater system is performed as described in Chapter 14. Periodic inservice functional testing is done in accordance with Subsection 10.4.7.4. Section 6.6 provides the ASME Code, Section XI requirements that are appropriate for the feedwater system.

- Section 3.2 delineates the quality group classification and seismic category applicable to the safety-related portion of this system and supporting systems. The controls and power supplies necessary for the safety-related functions of the condensate and feedwater system are Class 1E, and are described in Chapters 7 and 8.

- For a main feedwater line break inside the containment or a main steam line break, the MFIVs and the main feedwater control valves automatically close upon receipt of a feedwater isolation signal. The signals that produce a main feedwater isolation signal are identified and discussed in Subsection 7.3.1.2.6.

- The MFIVs are provided with solenoids supplied by redundant power divisions. Failure of either of the power divisions or solenoids does not prevent closure of the MFIV. Releases of radioactivity from the condensate and feedwater system, resulting from the main feedwater line break, are minimal because of the negligible amount of radioactivity in the system under normal operating conditions. Following a steam generator tube rupture, the main steam isolation system and the passive residual heat removal heat exchanger reduce accidental releases, as discussed in Section 10.3 and Chapter 15. Detection of radioactive leakage into and out of the system is facilitated by area radiation monitoring (described in Subsection 12.3.4), process radiation monitoring (described in Section 11.5), and steam generator blowdown sampling (described in Subsection 10.4.8).

- For a steam generator tube rupture event, positive and redundant isolation is provided for the main feedwater (MFIV and MFCV) with isolation signals generated by the protection and safety monitoring system (PMS). Refer to Subsection 7.3.1.2.6.

- Prevention and mitigation of feedline-related water hammer is accomplished through operation of the feedwater delivery system as described in Subsection 5.4.2.2. The feedwater piping at the steam generators is sloped so that it does not drain into the steam generators. These features help avoid the formation of a steam pocket in the feedwater piping which, when collapsed, could create a hydraulic instability.

10.4.7.4 Tests and Inspections

10.4.7.4.1 Preoperational Valve Testing

The MFIVs and feedwater control valves are checked for closing time prior to initial startup.

10.4.7.4.2 Preoperational Pipe Testing

The main feedwater lines from the steam generator to the anchor at the interface between the turbine building and the auxiliary building are classified as ASME Code, Section III, Class 2 and 3 and seismic Category I piping. The Class 2 portions of the main feedwater system piping are tested and inspected to the requirements of ASME Code, Section III, Class 2 piping. The portion of the piping between the containment penetration and the anchor, which is considered as the break exclusion zone described in Subsection 3.6.2, is subjected to 100-percent volumetric inspection at installation.

10.4.7.4.3 Preoperational System Testing

Preoperational testing of the condensate and feedwater system is performed as described in Chapter 14. Tests described in Subsection 14.2.9.1.7, under item c) of General Test Method and Acceptance Criteria satisfy BTP (AS) 10-2. Additional testing of the feedwater system is conducted during startup testing as described in Subsection 14.2.10.4.18.

10.4.7.4.4 Inservice Inspections

The performance, and structural and leaktight integrity of the condensate and feedwater system components are demonstrated by continuous operation.

Additional description of inservice testing and inspection for the MFIV and MFCV is presented in Subsection 3.9.6 and Section 6.6.

10.4.7.5 Instrumentation Applications

The condensate and feedwater instrumentation, is designed to facilitate automatic operation, remote control, and indication of system parameters.

Positioning of the main feedwater control valve during normal operation is the function of an automatic feedwater level control system using a refinement of a standard three element control scheme. For each steam generator, the three-element control system maintains feedwater flow equal to the steam flow, and steam generator water level is used as an input to trim feedwater flow and maintain programmed water level. Refinements on the standard control are made by varying the valve flow demand based on actual stem position (accounting for varying C_V versus lift) dynamic line losses and feedwater temperature. A flow venturi is located in each feedwater line to provide signals for the three element feedwater control system. Feedwater control is further described in Subsection 7.7.1.8.

The main feedwater pumps are tripped by manual actuation or feedwater isolation described in Section 7.3. A flow element in the discharge piping from each main feedwater pump provides a flow signal for control of the associated minimum flow recirculation valve.

Level transmitters, located at the deaerator storage tank, control deaerator level. Condensate flow to the deaerator is regulated by two split ranged control valves upstream of the deaerator. During normal power generation, the valves are regulated by a three element control system; total feedwater flow is used as a feed forward demand signal, and the control is trimmed by measured feedback of total condensate flow and deaerator storage tank level.

In the event a feedwater heater experiences a sizable tube leak or a feedwater heater water level control valve fails closed, the main turbine is protected from failure resulting from flooding on the shell side of a feedwater heater and subsequent water induction into the moving turbine blades. This is accomplished by automatic closure of the isolation valve in the steam extraction line to that heater and opening the high-level dump control valve that dumps the heater excess drains to the condenser. For heaters that do not have extraction line isolation valves, condensate isolation valves are automatically closed to isolate condensate flow to the heater tubes.

The total water volume in the condensate and feedwater system is maintained through automatic makeup and rejection of condensate to the condensate storage tank. The system makeup and rejection are controlled by the condenser hotwell level controller. Level transmitters are provided at the condenser hotwell for use by the hotwell level controller. The system water quality requirements are automatically maintained through the injection of an oxygen scavenging agent and a pH control agent into the condensate system. The pH control agent and oxygen scavenging agent injection is controlled by pH and the level of oxygen scavenging agent residual in the system which are continuously monitored by the secondary sampling system.

Instrumentation, including pressure indication, flow indication, and temperature indication, required for monitoring the system, is provided in the control room.

10.4.8 Steam Generator Blowdown System

The steam generator blowdown system (BDS) assists in maintaining acceptable secondary coolant water chemistry during normal operation and during anticipated operational occurrences of main condenser inleakage or primary to secondary steam generator tube leakage. It does this by removing

impurities which are concentrated in the steam generator. The steam generator blowdown system accepts water from each steam generator and processes the water as required.

10.4.8.1 Design Basis

10.4.8.1.1 Safety-Related Design Basis

The safety-related portion of each blowdown line is part of the steam generator system (SGS). Effects of a blowdown system line break are discussed in Section 3.6. The safety-related design bases are as follows:

- The system is provided with two isolation valves on each steam generator. These valves isolate the secondary side of the steam generators to preserve the steam generator inventory. This action provides a heat sink for a safe shutdown or design basis accident mitigation. It also provides isolation of nonsafety-related portions of the system.

- The steam generator blowdown system safety-related functions can be performed assuming a single, active component failure coincident with the loss-of-offsite or onsite power.

- Piping and valves from the steam generator up to and including the containment isolation valve, the first valve on the outboard side of the containment, are designed to ASME Code, Section III, Class 2, and seismic Category I requirements. The blowdown system piping and valves from the outlet of the containment isolation valve up to and including pipe anchors located at the auxiliary building wall are designed in accordance with ASME Code, Section III, Class 3, and seismic Category I requirements.

- The safety-related portion of the system is designed to withstand the effects of a safe shutdown earthquake. The safety-related portion of the system is protected from the effects of natural phenomena and is capable of performing its intended function following postulated events such as fire, internal missile, and pipe break.

- The safety-related portion of the system is designed so that a single, active failure in the blowdown system will not result in:

  – Loss-of-coolant accident
  – Loss of integrity of steam lines
  – Loss of the capability to effect a safe reactor shutdown
  – Transmission of excessive loading to the containment pressure boundary.

- The portion of the steam generator system that is constructed in accordance with ASME Code, Section III, Class 2 and 3, requirements is provided with access to welds and removable insulation, as required for inservice inspection in accordance with ASME Code, Section XI. (See Subsection 10.4.8.4.)

- The safety-related portion of the blowdown system is designed to function in the normal and accident environments identified in Subsection 3.11.1.

- The safety-related portion of the blowdown system is designed as described in Section 3.6 with regard to high-energy pipe break location and evaluation.

10.4.8.1.2 Power Generation Design Basis

The steam generator blowdown system draws secondary water from each steam generator via the blowdown line and processes this water as required to:

- Assist in controlling steam generator secondary side water chemistry during normal plant operation
- Establish and maintain steam generator wet layup conditions during plant shutdown periods
- Drain the secondary side of the steam generators for maintenance

10.4.8.2 System Description

10.4.8.2.1 General Description

Figures 10.4.8-1 and 10.3.2-1 illustrate the steam generator blowdown system piping and instrumentation design. Classification of equipment and components for the steam generator blowdown system is given in Section 3.2. The system consists of two blowdown trains, one for each steam generator. A crosstie is provided to process blowdown from both steam generators through both heat exchangers during high capacity blowdown from one steam generator.

The blowdown water is extracted from each steam generator from a location just above the tube sheet. The blowdown from each steam generator is cooled by a regenerative heat exchanger, and flow is controlled and pressure reduced by blowdown flow control valves. To recover the thermal energy, the condensate system provides cooling for the heat exchangers. To recover the blowdown fluid, each blowdown train has an electrodeionization (EDI) demineralizing unit which removes impurities from the blowdown flow. Downstream of the electrodeionization units, both trains combine into a common header that contains a relief valve for providing overpressure protection for the low-pressure portion of the system. A back-pressure control valve maintains pressure in the system between the flow control valve and the back-pressure control valve.

A pump is provided to drain the secondary side of the steam generator. The pump is also used for recirculation during low-pressure steam generator wet layup operations.

System isolation from the steam generator under normal operating and transient conditions is accomplished by the two isolation valves located in the auxiliary building. The valves close on actuation of the passive residual heat removal system, containment isolation, or high blowdown system radiation, temperature, or pressure.

10.4.8.2.2 System Operation

The various modes of operation are described in the following subsections.

10.4.8.2.2.1 Plant Startup

While low-pressure conditions exist in the steam generator, the blowdown flow control valves are operated with their bypass valves fully open to discharge the blowdown flow to the condensate system (CDS) for processing and recovery.

When the steam generator pressure is sufficiently high, the bypass valves can be closed and the blowdown flow control valves modulate to control the blowdown rate. The condensate control valves, which control the supply of cooling water to the heat exchangers, are adjusted during startup. The cooling water flow to the heat exchangers controls blowdown water to a temperature that is acceptable to the blowdown system electrodeionization units.

10.4.8.2.2.2 Normal Operation

The effectiveness of the blowdown system in controlling water chemistry depends upon the blowdown rate. The normal blowdown flowrate varies from a minimum of about 0.06 percent to a maximum of about 0.6 percent of maximum steaming rate. During normal operation, when the impurities are low, the expected blowdown rate is approximately 0.1 percent of maximum steaming rate (about 30 gpm total, or 15 gpm per steam generator), which maximizes the detection sensitivity for condenser tube leakage. The blowdown flow is cooled by the heat exchanger, and the pressure is reduced by the flow control valves. The blowdown fluid is processed through the electrodeionization units and discharged to the condensate system (condenser hotwell) for reuse.

In the event of main condenser tube leakage, when the concentration of impurities is high, the blowdown rate is increased to a maximum of approximately 0.6 percent of the maximum steaming rate (about 186 gpm total, or 93 gpm per steam generator at standard conditions). Normal operation is to recover the blowdown flow through the condensate system. However, blowdown with high levels of impurities can be discharged to the waste water system.

The back-pressure control valve is preset to a pressure which prevents flashing of the blowdown fluid in the electrodeionization units.

The blowdown flow and the electrodeionization waste stream (brine) flow are both continuously monitored for radioactivity from steam generator primary to secondary tube leakage. If such radioactivity is detected, the liquid radwaste system (WLS) is aligned to process the blowdown and electrodeionization waste effluent. If radioactivity reaches a preset high level, the blowdown flow control valves and the isolation valves automatically close.

The system operates normally under automatic control, except for flow control adjustments or flow path changes.

10.4.8.2.2.3 Subsection Not Used

10.4.8.2.2.4 Steam Generator Wet Layup

The system can be operated to establish and maintain wet layup conditions in the steam generators during plant shutdown periods. During wet layup operation, water is circulated through the steam generators and the heat exchangers are not required. To maintain the correct pH and oxygen concentration in the secondary water, chemicals are added to the recirculation flow via the turbine island chemical feed system (CFS). (See Subsection 10.4.11 for chemical feed system details.)

10.4.8.2.2.5 Steam Generator Drain

The steam generator blowdown system can be operated to drain the steam generator using the recirculation/drain pump and bypassing the flow control valves and the electrodeionization units. Total drain flowrate is approximately 200 gpm at standard conditions. During this mode of operation, the blowdown discharge maybe sent to the waste water system, the liquid radwaste system or the condensate system.

10.4.8.2.2.6 Steam Generator Tube Sheet Flush

The system can be operated for a short time at a total flowrate of approximately 1.85 percent of the maximum steaming rate (about 280 gpm) from one steam generator. To accommodate the high flow, the blowdown from one steam generator is isolated and the flow from the other steam generator is routed through both heat exchanger trains at a rate of approximately 140 gpm per train. The blowdown flow control valves and the blowdown electrodeionization units are bypassed during this

operation. The blowdown flow is controlled by throttling the flow control valve bypass isolation valves which are in series with a flow restricting orifice. The blowdown is discharged to the waste water system (WWS).

10.4.8.2.2.7 Emergency Operation

Blowdown system isolation is actuated on low steam generator water levels. The isolation of steam generator blowdown provides for a continued availability of the steam generator as a heat sink for decay heat removal in conjunction with operation of the passive residual heat removal system and the startup feedwater system.

10.4.8.2.3 Component Description

A description of the major steam generator blowdown system components is provided in this subsection.

10.4.8.2.3.1 Blowdown Regenerative Heat Exchangers

Two regenerative heat exchangers are provided, one for each steam generator blowdown train. The heat exchangers are located in the turbine building at the base slab elevation.

10.4.8.2.3.2 Blowdown Flow Control Valves

Two blowdown flow control valves are provided, one for each steam generator blowdown train. The control valves are capable of controlling the flow and pressure over the range of normal operating conditions.

10.4.8.2.3.3 Recirculation/Drain Pump

One centrifugal pump is provided for use during operating modes when steam generator pressure is low.

10.4.8.2.3.4 Pressure Control Valve

A backpressure control valve is provided to maintain appropriate system backpressure, within the operating range of blowdown flows, and prevent flashing within the low pressure section of the system when the blowdown is discharged to the condenser hotwell.

10.4.8.2.3.5 Blowdown Isolation Valves

Two valves in series, located outside containment in the auxiliary building, are provided to automatically isolate the blowdown system in the event of abnormal conditions within the blowdown system, the reactor coolant system, or the main steam system. The valves are air-operated globe valves that fail close on loss of air or actuating power. See Section 7.3 for a description of the automatic control functions on the valves.

The first isolation valve provides a containment isolation function in addition to redundant isolation of the blowdown system. The valves close on an engineered safeguards actuation signal and provide containment integrity in conjunction with the steam generator and blowdown line inside containment. The valves are active, ASME Code, Section III, Safety Class 2, seismic Category I.

The isolation valves provide for redundant isolation of the blowdown system upon actuation of the passive residual heat removal system, low (narrow range) steam generator level, or abnormal conditions in the blowdown system. Each isolation valve receives an actuation signal from the

protection and safety monitoring system (PMS) upon passive residual heat removal actuation to preserve steam generator inventory. The valves also close upon receiving a low (narrow range) water level signal to preserve steam generator inventory. Additionally, the valves receive a high radiation signal, high temperature signal, and high pressure signal, indicating abnormal conditions in the blowdown system and actuating automatic isolation of the system. The second isolation valves are active, ASME Code, Section III, Safety Class 3, seismic Category I.

The valves are located outside containment within the auxiliary building and are attached to seismic Category I piping.

10.4.8.2.3.6 Electrodeionization Unit

Two trains of electrodeionization demineralizing units are provided for the steam generator blowdown system electrodeionization. The electrodeionization unit in each train is configured in a stack arrangement. The stack normally contains numerous pairs of stacked membranes. One cell pair consists of an ion-diluting flow (product) channel located between a cation and an anion membrane with an ion concentrating (reject) flow channel located alternately between the cell pairs. A DC potential is maintained across the electrode plates which are located on opposite ends of the stacked membranes. Ion exchange resin is contained within the product flow channel, acting as an ion selective media in the electrodeionization process, aiding in the transfer of ions from the product stream to the reject stream. Isolation valves are provided for each stack to allow for maintenance of a stack.

Filters upstream of the electrodeionization stack in each train remove suspended solids and particulate matter from electrodeionization influent.

The ion concentrate reject stream is directed to the waste water system (WWS) or the liquid radwaste system (WLS).

The electrodeionization stacks are located in the turbine building and in an area where provisional shielding can be put in place. Anionic and cationic resins are contained within the electrodeionization stacks. These resins are not consumed or exhausted in the electrodeionization process. Radiation monitors associated with the steam generator blowdown system, steam generator system (main steam), and the condenser air removal system provides the means to determine if the secondary side is radioactively contaminated.

After prolonged use, the electrodeionization units will be replaced. If they are not radioactively contaminated, they require no special packaging and may be disposed as clean solid waste. If they are radioactively contaminated, they will be dewatered, the nozzles blocked and packaged for transport according to DOT regulations. Packaged electrodeionization units may be stored in the Radwaste Building.

10.4.8.2.3.7 Electrodeionization Reject Pressure Regulating Valve

A backpressure regulating valve is provided to maintain appropriate system backpressure to the reject path of the EDI modules. By keeping a constant backpressure, this valve will also keep a steady flow through radiation monitor BDS-RE011. This valve will also modulate within the operating range of blowdown flows during normal operation.

10.4.8.2.4 Instrumentation Applications

Flow, pressure, temperature, and radioactivity indicators with alarms monitor system operation. If pressure, temperature, or radioactivity reach a high level setpoint, an alarm is annunciated and the blowdown flow control valves and upstream isolation valves are automatically closed.

Flow elements and transmitters measure and control blowdown flow from the steam generators. The flow elements are located downstream of the blowdown flow control valves.

Temperature instrumentation monitors the temperature of blowdown fluid upstream and downstream of each heat exchanger. The heat exchanger outlet temperature controls heat exchanger cooling water flow as well as the blowdown flow to limit high temperature blowdown fluid to the electrodeionization unit.

Radioactivity detection instrumentation detects and monitors the presence of radioactivity in the combined blowdown stream from both trains. A radiation element is located in the common header upstream of the recovered blowdown three-way valve. This three-way valve normally directs the recovered blowdown flow to the condenser. When recovery of the blowdown fluid is not possible, the flow is diverted to the waste water system. Upon detection of significant levels of radioactivity via a radiation transmitter alarm, the steam generator blowdown flow is diverted to the liquid radwaste system for processing. A second radioactive detection instrument is located on the waste stream of the electrodeionization blowdown. Similarly, a three-way valve normally directs this electrodeionization brine blowdown to the waste water system. With detection of significant levels of radioactivity, the brine blowdown is diverted to the liquid radwaste system.

10.4.8.3 Safety Evaluation

- Each blowdown line is provided with redundant safety-related valves that isolate the secondary side of the steam generator to preserve the steam generator inventory. The inventory is maintained as a heat sink for sensible and decay heat removal from the reactor coolant system.

- The steam generator blowdown system safety-related functions are accomplished by redundant means. A single, active component failure within the safety-related portion of the system does not compromise the safety-related function of the system. Power is supplied by the Class 1E dc power system as described in Chapter 8.

- Section 3.2 delineates the quality group classification. The controls and power supplies necessary for safety-related functions of the steam generator blowdown system are Class 1E, and are described in Chapters 7 and 8.

- The safety-related portion of the steam generator blowdown system are located in the containment and auxiliary buildings. These buildings and areas are designed to withstand the effects of earthquakes, tornadoes, hurricanes, floods, external missiles, and other natural phenomena. Sections 3.3, 3.4, 3.5, 3.7, and 3.8 provide the bases for the adequacy of the structural design of these buildings and areas. The safety-related portions of the steam generator blowdown system are designed to remain functional after a safe shutdown earthquake. Sections 3.7 and 3.9 provide the design loading conditions that are considered.

- No single failure coincident with loss of offsite power compromises the safety-related functions of the system or will result in:

  – Loss-of-coolant accident
  – Loss of integrity of steam lines
  – Loss of the capability to effect a safe reactor shutdown
  – Transmission of excessive loading to the containment pressure boundary.

  Component or functional redundancy is provided so that safety-related functions can be performed, assuming a single, active failure coincident with loss of ac power.

- The steam generator blowdown system is initially tested in accordance with the program described in Chapter 14. Periodic inservice functional testing is done in accordance with Subsection 10.4.8.4. Section 6.6 provides the ASME Code, Section XI requirements that are appropriate for the safety-related portions of the steam generator blowdown system.

- The safety-related components of the steam generator blowdown system are qualified to function in normal, test, and accident environmental conditions. The environmental qualification program is provided in Section 3.11.

- Discussions of high energy pipe break locations and evaluation of effects are provided in Subsections 3.6.1 and 3.6.2.

- Subsection 6.2.3 delineates the criteria and compliance with applicable requirements and the criteria for the containment isolation provisions.

- The failure modes and effects analysis for the steam generator blowdown system is provided in Table 10.3.3-1.

10.4.8.4 Inspection and Testing Requirements

10.4.8.4.1 Preservice Testing/Inspection

The blowdown system components are tested and inspected during plant startup as a part of the preservice test program as discussed in Chapter 14. The steam generator blowdown system's safety-related functions are designed to include the capability for testing. This includes operation of applicable portions of the protection system. The safety-related components of the system (valves and piping,) are designed and located to permit preservice and inservice inspections to the extent practical.

The steam generator blowdown lines within the containment and the auxiliary building are visually and volumetrically inspected at installation as required by ASME Code, Section XI preservice inspection requirements.

10.4.8.4.2 Inservice Testing/Inspection

The performance and structural leaktight integrity of system components are demonstrated by normal operation.

Additional discussion of inservice inspection of the blowdown containment isolation valves is contained in Section 6.6 and Subsection 3.9.6.

Instruments and controls are calibrated during startup and recalibrated, as necessary, to maintain system operation within its design specifications.

10.4.9 Startup Feedwater System

The startup feedwater system supplies feedwater to the steam generators during plant startup, hot standby and shutdown conditions, and during transients in the event of main feedwater system unavailability. The startup feedwater system is composed of components from the AP1000 main and startup feedwater system (FWS) and steam generator system (SGS).

10.4.9.1 Design Basis

10.4.9.1.1 Safety Design Basis

The safety functions of the startup feedwater system are to provide for containment isolation, steam generator isolation and feedwater isolation following design basis events requiring these actions. Containment isolation is provided to limit radioactive releases to the environment following design basis events that result in the releases of radioactivity to the containment. Steam generator isolation is provided to limit rapid blowdown to a single steam generator following a feedwater or steam line break. Feedwater isolation limits excessive feedwater flow to the steam generators to limit mass and energy releases to containment to limit excessive RCS cooldown and to limit steam generator overfill.

The portion of the startup feedwater system from the steam generator inlets outward through the containment up to and including the startup feedwater isolation valves (SFIVs) is constructed in accordance with the requirements of ASME Code, Section III for Class 2 components and is designed to seismic Category I requirements. The portion of the startup feedwater system from the startup feedwater isolation valve inlets to the piping restraints at the interface between the auxiliary building and the turbine building is constructed in accordance with the requirements of ASME Code, Section III for Class 3 components and is designed to seismic Category I requirements.

The startup feedwater system provides redundant isolation valves, as described below, for the startup feedwater lines routed into containment. The isolation valves close after receipt of an isolation signal in sufficient time to limit the mass and energy release to containment consistent with the containment analysis presented in Section 6.2.

- The safety-related portions of the startup feedwater system are designed to remain functional after a safe shutdown earthquake (SSE) and to perform their intended function of isolating startup feedwater flow following postulated events.

- The safety-related portions of the startup feedwater system are protected from wind and tornado effects, as described in Section 3.3; flood protection is described in Section 3.4; missile protection is described in Section 3.5; protection against dynamic effects associated with the postulated rupture of piping is described in Section 3.6; seismic protection is described in Section 3.7; environmental design is described in Section 3.11; and fire protection is described in Section 9.5.

- The portion of the startup feedwater system to be constructed in accordance with ASME Code, Section III, Class 2 requirements is provided with access to welds and removable insulation for inservice inspection, in accordance with ASME Code, Section XI. The portion of the startup feedwater system to be constructed in accordance with ASME Code, Section III, Class 3 requirements is also designed and configured to accommodate inservice inspection in accordance with ASME Code, Section XI. The startup feedwater system is designed so that the active components are capable of limited testing during plant operation.

- The startup feedwater system quality group classification codes are identified in Section 3.2. The control functions and power supply are described in Chapters 7 and 8.

- Double valve startup feedwater isolation is provided by the startup feedwater control valve and the startup feedwater isolation valve. Both valves are designed to close on a startup feedwater isolation signal, an appropriate engineered safeguards features (ESF) signal as indicated on Figure 7.2-1. The startup feedwater isolation valve also serves as a containment

isolation valve. The startup feedwater control valve fails closed on loss of air. See Section 7.3. Backflow in the startup feedwater line results in closure of the startup feedwater check valve.

- For a steam generator tube rupture event, positive and redundant isolation is provided for the startup feedwater system (startup feedwater isolation valve and startup feedwater control valve), with isolation signals generated by the protection and safety monitoring system.

10.4.9.1.2 Power Generation Design Basis

- During normal plant startup, shutdown or hot standby, feedwater can be supplied through the startup feedwater control valves to the steam generators using either a booster/main feedwater pump drawing water from the deaerator storage tank (refer to Subsection 10.4.7), or using the startup feedwater pumps drawing water from the condensate storage tank.

- In the event of loss of the main feedwater system, the startup feedwater pumps automatically supply feedwater to the steam generators for heat removal from the reactor coolant system. The heat removal function of the startup feedwater system is nonsafety-related. The startup feedwater system avoids the need for actuation of the safety-related passive core cooling system. Following the transient, the system refills the steam generators and supports reactor coolant system cooldown.

- One operating startup feedwater pump delivers sufficient flow to the steam generators to avoid actuation of the passive core cooling system following a reactor trip. The maximum flow available from two operating startup feedwater pumps does not result in overcooling the reactor coolant system, overfilling the steam generators, or inputting excessive mass/energy to containment following a main steam line break.

- The startup feedwater pumps use the condensate storage tank as a water supply source. A sufficient volume of feedwater is available from the condensate storage tank (refer to Subsection 9.2.4) to achieve cold shutdown, based on 8 hours of operation at hot standby conditions and subsequent cooldown of the reactor coolant system within 6 hours to conditions which permit operation of the normal residual heat removal system.

- The startup feedwater pumps are headered at the pump discharge, and a separate line runs from the header to each steam generator.

- For a main feedwater or main steam line break (MSLB) inside the containment, the startup feedwater lines provide a nonsafety-related path for the addition of feedwater to the remaining intact loop if ac power is available.

- For a main feedwater line break upstream of the main feedwater isolation valve (outside of the containment), the startup feedwater lines provide a nonsafety-related path for the addition of feedwater to maintain steam generator level if ac power is available.

- Two startup feedwater pumps are provided with a single pump capable of satisfying the startup feedwater system flow demand for decay heat removal. These pumps automatically start and maintain steam generator water level when the main feedwater system is unavailable.

- In the event of loss of normal ac power, the startup feedwater pumps and associated motor operated isolation valves are powered by the onsite standby ac power supply (diesels). Each of the two startup feedwater pumps is powered by its respective standby diesel.

- During normal plant startup, feedwater is supplied through the startup feedwater control valves to the steam generators until transition is made to the main feedwater control valves of the main feedwater system. During normal plant shutdown, feedwater is supplied through the startup feedwater control valves after transition is made from the main feedwater control valves, and until the normal residual heat removal system is placed in service.

10.4.9.2 System Description

10.4.9.2.1 General Description

The startup feedwater system is shown schematically in Figure 10.4.7-1 as part of the condensate and feedwater system piping and instrument diagram and in Figure 10.3.2-1 as part of the main steam system piping and instrument diagram. Classification of equipment and components is given in Section 3.2.

Startup feedwater is defined to be feedwater that passes through the startup feedwater control valves, and can be supplied from either of two sources. Startup feedwater can be supplied by a booster/main feedwater pump drawing from the deaerator storage tank and delivering through cross connect piping to the startup feedwater header; or, startup feedwater can be supplied by one or both startup feedwater pumps drawing from the condensate storage tank and delivering to the startup feedwater header. The startup feedwater header is defined to be the common segment of startup feedwater piping downstream of the startup feedwater pumps. The booster/main feedwater pumps are part of the condensate and feedwater system and are described in Subsection 10.4.7. As described in Subsection 10.4.7.2.1, the cross connection piping between the main feedwater pump discharge header and the startup feedwater header contains a check valve and a nonsafety-related, air-operated isolation valve. The check valve prevents the startup feedwater pumps from supplying the main feedwater header, and the isolation valve automatically closes upon a main feedwater isolation signal to isolate the main feedwater system from the startup feedwater system.

Two parallel startup feedwater pumps are provided and take suction from the condensate storage tank. Each startup feedwater pump discharges to the startup feedwater header through a venturi flow element, an automatic recirculation valve, and a remotely-operated isolation valve. The venturi flow element provides a flow measurement signal at normal flow rates, and cavitates at a flow rate near pump runout to choke the flow and avoid further flow increase. The automatic recirculation valve functions as a check valve to prevent reverse flow through the pump, and also functions as a minimum flow control valve for pump protection; during conditions of low forward flow to the system, sufficient flow from the pump is automatically recirculated back to the condensate storage tank to meet pump minimum flow requirements. The discharge isolation valve is closed when the associated pump is not operating; when in standby operation, the valve automatically opens when the associated pump starts.

The startup feedwater header branches into individual lines to the two steam generators. Each individual line contains a startup feedwater control valve, a check valve, and a startup feedwater isolation valve. Startup feedwater flow in each line is controlled by the associated startup feedwater control valve to maintain level in the associated steam generator.

A startup feedwater system failure analysis for safety-related components is presented in Table 10.4.9-1.

10.4.9.2.2 Component Description

From the connections at the steam generators out through the startup feedwater isolation valves, the startup feedwater system is designed in accordance with the requirements of ASME Code, Section III for Class 2 components and seismic Category I requirements. From upstream of the startup

feedwater isolation valve to the restraints at the interface between the auxiliary building and turbine building, the system is designed in accordance with ASME Code, Section III for Class 3 components and seismic Category I requirements. The remaining portion of the startup feedwater system is nonsafety-related.

Startup Feedwater Pump

Each startup feedwater pump is a multistage, centrifugal pump driven by an ac motor. Each pump can supply 100 percent of the required flow to the two steam generators to meet the decay heat removal requirements specified in Subsection 10.4.9.1.2. The pumps automatically start as described in Subsection 10.4.9.2.3.4. Isolation valves at the pump suction and discharge allow each startup feedwater pump to be individually serviced. The discharge isolation valve for each pump is powered by the same train of the onsite standby ac power supply as the associated pump.

Startup Feedwater Control Valve

The startup feedwater control valves are air-operated, modulating control valves with the dual purpose of controlling startup feedwater flow rate, as well as providing isolation of the startup feedwater system. The valve body is a globe design that provides the required range of startup feed control, as well as positive isolation. The startup feedwater control valves operator is equipped with an auxiliary air accumulator to provide independent operation of the startup feedwater control valves upon loss of normal instrument air supply.

The startup feedwater control valves automatically maintain water level in the steam generators during operation of the startup feedwater system, in response to signals generated by the plant control system.

In the event of a secondary side pipe rupture inside the containment, the startup feedwater control valve provides a secondary backup to the startup feedwater isolation valve limiting the quantity of high-energy fluid that enters the containment through the broken pipe. For emergency closure of the valve, a solenoid is deenergized, resulting in valve closure in sufficient time to limit the mass and energy release to containment consistent with the containment analysis presented in Section 6.2. The electrical solenoid is energized from a Class 1E source.

Startup Feedwater Isolation Valve

One startup feedwater isolation valve is installed in each startup feedwater line outside containment and downstream of a startup feedwater control valve and a startup feedwater check valve. The following primary functions are performed by the valve:

- The startup feedwater isolation valve is provided to prevent the uncontrolled blowdown from more than one steam generator in the event of startup feedwater line rupture. The startup feedwater control valve provides backup isolation.

- The startup feedwater isolation valve and the startup feedwater control valve provide isolation of the nonsafety-related portions of the system from the safety-related portions.

- In the event of a secondary pipe rupture inside containment, the startup feedwater isolation valve and startup feedwater control valve provide isolation to limit the quantity of high energy fluid that enters the containment.

- In the event of a steam generator tube rupture, the startup feedwater isolation valve and startup feedwater control valve limit overfill of the steam generator by terminating startup feed flow.

The startup feedwater isolation valve is a remotely-operated gate valve designed in accordance with ASME Code, Section III Class 2 requirements. The valve operator is designed to stroke against steam generator pressure or startup feedwater pump shutoff head.

The startup feedwater isolation valve and startup feedwater control valve functional diagrams are shown in Figure 7.2-1. To provide the safety function actuation (closure) as well as reliable alignment, and redundant and independent actuation, the startup feedwater isolation valve and startup feedwater control valve are powered from separate Class 1E power sources.

10.4.9.2.3 System Operation

The startup feedwater system supplies the steam generators with feedwater during conditions of plant startup, hot standby and shutdown, and during transients in the event of main feedwater system unavailability. The startup feedwater system also supplies feedwater during low power operation under conditions when the startup feedwater control valves regulate the feedwater flow to the steam generators.

10.4.9.2.3.1 Startup

During reactor startup and at low power levels, feedwater is supplied to the steam generators through the startup feedwater control valves using either the startup feedwater pumps drawing from the condensate storage tank, or a booster/main feedwater pump drawing from the deaerator storage tank. Refer to Subsection 10.4.7 for a description of the operation of the condensate and feedwater system and the booster/main feedwater pumps. The feedwater pumps in use operate on minimum flow recirculation as necessary while maintaining the water level of the steam generators. Feedwater is controlled by the startup feedwater control valves, which are operated either manually from the control room or automatically in accordance with steam generator level demand. If the startup feedwater pumps are initially in use, transfer is made to a booster/main feedwater pump prior to exceeding the capacity limit of the startup pumps. As power increases, feedwater continues to be supplied through the startup feedwater control valves until control of feedwater is automatically transferred from the startup feedwater control valves to the main feedwater control valves. As the main feedwater control valves open and assume responsibility for maintaining steam generator water level, the startup feedwater control valves close. Position indication is available in the main control room for the main and startup feedwater control valves.

10.4.9.2.3.2 Hot Standby

During hot standby conditions, feedwater is supplied to the steam generators through the startup feedwater control valves using either one or both startup feedwater pumps drawing from the condensate storage tank, or a booster/main feedwater pump drawing from the deaerator storage tank. The startup feedwater control valves operate to maintain the steam generator levels, and minimum flow recirculation is automatically utilized as required to protect the feedwater pumps that are in use.

10.4.9.2.3.3 Shutdown

Operation during power descent and shutdown is generally the reverse of operation during startup and power ascent. At low feedwater flows, control of feedwater is automatically transferred from the main feedwater control valves to the startup feedwater control valves. Feedwater is supplied by an operating booster/main feedwater pump drawing from the deaerator storage tank. Feedwater can continue to be supplied by a booster/main feedwater pump during the shutdown process; alternatively, feedwater supply can be transferred to the startup feedwater pumps when flow demand has decreased to within their capacity. Feedwater continues to be supplied until the normal residual heat removal system is placed in service.

10.4.9.2.3.4 Automatic Starts

The startup feedwater pumps automatically start upon conditions resulting from insufficient main feedwater flow to the steam generators. An automatic pump start signal is generated by the plant control system (PLS). The signal is generated on low main feedwater flow coincident with low steam generator level. As a backup to this logic, it is also initiated on steam generator level alone, at a setpoint below the low steam generator level setpoint.

The amount of startup feedwater flow delivered to each steam generator is determined by the associated startup feedwater control circuit, which sends a signal to modulate the startup feedwater control valve (Figure 10.3.2-1) in response to steam generator water level control signals. The control valve is modulated as required to maintain the programmed steam generator water level setpoint.

Following a reactor trip that is not the result of a main feedwater system malfunction and in which the main feedwater system remains available, the startup feedwater pumps do not automatically start. In this case, the startup feedwater control valves take control and open to supply the steam generators using feedwater delivered from a booster/main feedwater pump through cross-connect piping. The startup feedwater pumps remain on standby for backup protection, and can be manually started if desired by the plant operator.

10.4.9.2.3.5 Emergency Operation

The startup feedwater system is not required to supply feedwater under accident conditions. However, the startup feedwater system is expected to be available as a nonsafety-related, first line of defense to provide a source of feedwater for the steam generators. Coordinated operation of the startup feedwater system (which starts automatically, as discussed in Subsection 10.4.9.2.3.4), if available, and the main steam supply system (refer to Section 10.3) are employed to remove the primary loop sensible heat and reactor decay heat. A minimum condensate storage tank volume of 325,000 gallons is required for defense-in-depth purposes. The condensate storage tank size is shown in Subsection 9.2.4.2.2.

10.4.9.3 Safety Evaluation

- The safety-related portions of the startup feedwater system are located in the containment and auxiliary buildings. These buildings are designed to withstand the effects of earthquakes, tornadoes, hurricanes, floods, external missiles, and other natural phenomena. Sections 3.3, 3.4, 3.5, 3.7, and 3.8 provide the bases for the adequacy of the structural design of these buildings.

- The safety-related portions of the startup feedwater system are designed to remain functional after a design basis earthquake. Subsection 3.7.2 and Section 3.9 provide the design loading conditions that are considered. Sections 3.5, 3.6, and Subsection 9.5.1 provide the analyses to provide confidence that a safe shutdown, as outlined in Section 7.4, is achieved and maintained.

- The startup feedwater system safety-related functions are accomplished by redundant means. A single, active component failure of the safety-related portion of the system does not compromise the safety function of the system. Table 10.4.9-1 provides a failure analysis of the safety-related active components of the startup feedwater system. Power is supplied from onsite power systems, as described in Chapter 8.

- Preoperational testing of the safety-related portion of the condensate and feedwater system is performed as described in Chapter 14. Periodic inservice functional testing is done in accordance with Subsection 10.4.9.4. Section 6.6 provides the ASME Code, Section XI requirements that are appropriate for the startup feedwater system.

- Section 3.2 delineates the quality group classification and seismic category applicable to the safety-related portion of this system and supporting systems. The controls and power supplies necessary for the safety-related functions of the startup feedwater system are Class 1E, as described in Chapters 7 and 8.

- The startup feedwater isolation valves and the startup feedwater control valves automatically close upon receipt of a feedwater isolation signal, which occurs on a steam generator high water level and other appropriate engineered safeguards signals as shown on the diagrams titled “Feedwater Isolation” and “Steam Line Isolation” in Figure 7.2-1.

- For a steam generator tube rupture event, positive and redundant isolation is provided for the startup feedwater system (startup feedwater isolation valve and startup feedwater control valve) to prevent steam generator overfill, with engineered safeguards isolation signals generated by the protection and safety monitoring system (PMS).

10.4.9.4 Tests and Inspections

10.4.9.4.1 Preoperational Valve Testing

The startup feedwater isolation valves and startup feedwater control valves are checked for closing time prior to initial startup.

10.4.9.4.2 Preoperational Pipe Testing

The Class 2 portion of the startup feedwater system piping is tested and inspected to the requirements of ASME Code, Section III, Class 2 piping. In addition, the portion of the piping between the containment penetration and the anchor, which is traditionally considered as the break exclusion zone described in Subsection 3.6.2, is subjected to 100-percent volumetric inspection at installation (that is, 100-percent volumetric examination of shop and field longitudinal and circumferential welds).

10.4.9.4.3 Preoperational System Testing

Preoperational testing of the startup feedwater system is performed as described in Chapter 14. Tests described in Subsection 14.2.9.1.7, under item c) of General Test Method and Acceptance Criteria satisfy BTP (AS) 10-2. Additional testing of the startup feedwater system is conducted during startup testing as described in Subsection 14.2.10.4.18.

10.4.9.4.4 Inservice Inspections

The performance and structural and leaktight integrity of the startup feedwater system components are demonstrated by normal operation.

The inservice inspection program for ASME Section III Class 2 and 3 components is described in Section 6.6. The inservice testing program, including testing for the startup feedwater isolation valve and startup feedwater control valve, is described in Subsection 3.9.6.

10.4.9.5 Instrumentation Applications

The startup feedwater system instrumentation is designed to facilitate automatic operation, remote control, and continuous indication of system parameters.

The startup feedwater flow is controlled by a steam generator level demand signal modulating the startup feedwater control valve. The control valve may either be in manual or automatic control. Refer to Section 7.7. The startup feedwater flow transmitters also provide redundant indication of startup feedwater and automatic safeguards actuation input on low flow coincident with low, narrow range steam generator level. See Section 7.3.

10.4.10 Auxiliary Steam System

The auxiliary steam system (ASS) provides the steam required for plant use during startup, shutdown, and normal operation. Steam is supplied from either the auxiliary boiler or the main steam system.

10.4.10.1 Design Basis

10.4.10.1.1 Safety Design Basis

The auxiliary steam system serves no safety-related function and therefore has no nuclear safety design basis.

10.4.10.1.2 Power Generation Design Basis

The auxiliary steam system supplies steam required by the unit for a cold start of the main steam system and turbine-generator. Additionally, the auxiliary steam system provides steam for hot water heating. Main steam supplements the auxiliary steam header during startup and supplies the auxiliary steam header during normal operation. The auxiliary boiler provides steam to the header during plant shutdown.

10.4.10.2 System Description

10.4.10.2.1 General Description

The auxiliary boiler is located in the turbine building. The system consists of steam generation equipment and distribution headers.

Condensate from the condensate storage tank is chemically treated and pumped to the auxiliary boiler deaerator where oxygen and non-condensables are removed using auxiliary steam. The auxiliary boiler feedwater pumps deliver condensate from the auxiliary boiler deaerator to the auxiliary boiler. A feedwater control valve, located in the feedwater piping, regulates water level in the auxiliary boiler. Feedwater flow is proportional to auxiliary boiler steaming rate. Steam generated by the auxiliary boiler is supplied to the plant auxiliary steam distribution piping.

Boiler water quality is maintained by controlling boiler blowdown flow to an atmospheric blowdown tank and by feeding oxygen scavenging and pH control chemicals to the boiler makeup water system.

Water level in the auxiliary boiler deaerator is maintained by an automatic control valve in the condensate supply and deaerator overflow piping. Makeup water is supplied from the demineralized water transfer and storage system.

10.4.10.2.2 Component Description

Auxiliary steam system component classification is as described in Section 3.2.

Auxiliary Steam System and Boiler

The auxiliary steam boiler is an electric package boiler with a nominal net output capacity of approximately 62,000 pounds per hour of saturated steam at 195 psig. The system is protected from overpressure by safety valves located on the boiler, boiler deaerator, and auxiliary steam header.

Pumps

Two 100-percent capacity auxiliary boiler feedwater pumps are provided to feed the auxiliary steam boiler.

Two 100-percent capacity auxiliary boiler makeup pumps maintain level in the boiler deaerator.

Auxiliary Boiler Deaerator

The auxiliary boiler deaerator is a 100-percent-capacity deaerator which uses steam supplied by the auxiliary steam header. The auxiliary boiler deaerator steam blanket is controlled for preheating and deaerating boiler makeup water. The auxiliary boiler deaerator removes oxygen and non-condensables from auxiliary boiler feedwater.

Chemical Treatment Components

The auxiliary boiler makeup water is treated with pH control and oxygen scavenging chemicals. Chemical injections maintain proper water chemistry during operational conditions. Batch chemicals for cleaning and layup are injected into the auxiliary boiler and auxiliary boiler deaerator when they are not in operation. Chemical feed equipment for the auxiliary steam system is part of the turbine island chemical feed system (CFS) and is described in Subsection 10.4.11.

10.4.10.2.3 System Operation

When in operation, the auxiliary steam system provides the following services:

- Steam to the plant hot water heating system heat exchangers where water is heated and pumped to the heating system ventilation coils.
- Steam for the condensate system deaerator when condensate heating occurs during preoperational cleanup of the condensate and feedwater system.
- Sealing steam to the glands of the main turbine prior to the availability of main steam.
- Steam for maintaining pressure in the condensate system deaerator after a turbine trip when extraction steam is lost.
- Steam for blanketing of the MSR and feedwater heaters when main steam is not available.

Operational safety features are provided within the system for the protection of plant personnel and equipment. The auxiliary steam system does not interface directly with nuclear process systems.

10.4.10.3 Safety Evaluation

The auxiliary steam system has no safety-related function and therefore requires no nuclear safety evaluation. High energy pipe rupture analysis is not required for the auxiliary steam system since none of the lines pass through areas where safety related equipment is located.

10.4.10.4 Tests and Inspections

Testing of the auxiliary steam system is performed prior to initial plant operation.

Components of the system are monitored during operation to verify satisfactory performance.

10.4.10.5 Instrumentation Applications

A boiler control system is provided with the auxiliary boiler package for automatic control of the auxiliary boiler. Features of the control system include automatic shutdown of the auxiliary boiler on an abnormal condition.

The auxiliary steam system is provided with the necessary controls and indicators for local or remote monitoring of the operation of the system.

10.4.11 Turbine Island Chemical Feed

The turbine island chemical feed system (CFS) injects required chemicals into the condensate (CDS), feedwater (FWS), auxiliary steam (ASS), service water (SWS), and demineralized water treatment (DTS). CFS components are located in the turbine building, SWS chemical treatment building, and SWS cooling tower basin area.

10.4.11.1 Design Basis

10.4.11.1.1 Safety Design Basis

The turbine island chemical feed system serves no safety-related function and therefore has no nuclear safety design basis.

10.4.11.1.2 Power Generation Design Basis

A noncorrosive condition is maintained within the systems serviced by the turbine island chemical feed system.

The secondary sampling system (SSS), as described in Subsection 9.3.4, contains sampling requirements in accordance with water chemistry specifications that are provided in Table 10.3.5-1.

10.4.11.2 System Description

Classification of equipment and components is given in Section 3.2.

10.4.11.2.1 Component Description

Condensate, Feedwater and Auxiliary Steam

An all-volatile chemical feed system (AVT) is used for condensate, feedwater and auxiliary steam water chemistry control. An oxygen scavenger is injected into the condensate system downstream of the condensate polishers to control the dissolved oxygen level. Feedwater chemistry is controlled by maintaining a residual level of oxygen scavenger. The injection point for the feedwater oxygen

scavenger is located upstream of the feedwater booster pump suction. A pH adjuster is also injected into the condensate system downstream of the condensate polisher for pH control. Injection for pH control of the feedwater is located upstream of the feedwater booster pump suction. Chemical feed pumps and tanks are used to store and inject the chemicals into the piping system. Subsection 10.4.10.2.2 describes chemical feed for the auxiliary steam system.

Service Water

A biocide, pH adjuster, and dispersant/corrosion/scale inhibitor are injected into the service water system as required. A nonoxidizing biocide can be fed to the service water cooling tower basin. Subsection 9.2.1.2.2 describes chemical feed for the service water system.

Demineralized Water Treatment

A pH adjuster, chlorine reducing agent, and scale inhibitor are injected into the demineralized water treatment system. Subsection 9.2.3.2.3 describes chemical feed for the demineralized water treatment system.

10.4.11.2.2 System Operation

Condensate, Feedwater and Auxiliary Steam System Chemistry Control

An oxygen scavenger is injected upstream of the feedwater booster pump suction to maintain a residual level of oxygen scavenger and a dissolved oxygen level of not more than 5 ppb at the inlet to the steam generator.

A pH adjuster is also injected upstream of the feedwater booster pump suction to maintain the pH at the steam generator inlet within the control program for pH.

An oxygen scavenger is injected into the condensate system downstream of the condensate polisher to maintain a dissolved oxygen level of not more than 10 ppb at the inlet of the deaerator.

A pH adjuster is injected into the condensate system downstream of the condensate polisher to maintain the pH above 9.0 at the deaerator inlet within the control program for pH.

The chemical feed system may be used to place the steam generators in wet layup. This layup process is accomplished using the chemical feed system in conjunction with the steam generator blowdown system. Refer to Subsection 10.4.8.2 for details of this process.

An oxygen scavenger and pH adjuster are injected into the auxiliary steam system downstream of the boiler makeup pumps to maintain the dissolved oxygen level and pH within the auxiliary boiler program levels. The chemical feed rates are manually adjusted.

Service Water System Chemistry Control

A biocide, pH adjuster and dispersant/corrosion/scale inhibitor are injected in the SWS cooling tower basin as required. Chemical feed rates for the biocide and dispersant/corrosion/scale inhibitor are manually adjusted to maintain proper concentrations. The pH adjuster chemical feed rate is controlled electronically from instrumentation that measures pH.

A nonoxidizing biocide is provided to control algae formation on the service water cooling tower. The feed rate is manually adjusted.

Demineralized Water Treatment System Chemistry Control

A pH adjuster, chlorine reducing agent, and scale inhibitor are injected into the raw water supply to the demineralized water treatment system.

10.4.11.3 Safety Evaluation

The turbine island chemical feed system has no safety-related function and therefore requires no nuclear safety evaluation.

Toxic gases, such as chlorine, are not used in the turbine island chemical feed system. The impact of toxic material on main control room habitability is addressed in Section 6.4.

10.4.11.4 Tests and Inspections

The turbine island chemical feed system is operationally checked before initial plant startup to verify proper functioning of the feed systems and chemical sensors.

10.4.11.5 Instrumentation Applications

The secondary sampling system (SSS), as described in Subsection 9.3.4, provides instrumentation which measures dissolved oxygen, oxygen scavenger residual, and pH for the condensate, feedwater, and steam generator systems. These analyzers provide an indication of water quality and inputs for either manual or automatic control of the condensate and feedwater systems oxygen scavenging and pH control chemical feed pumps. Grab samples are analyzed to provide input for manual adjustment of feed rates for the auxiliary steam system oxygen scavenging and pH control chemical feed pumps. Wet layup operations are manually performed based on the results of the grab sample analysis.

Grab samples are analyzed to provide input for manual adjustment of feed rates for biocide, pH adjustment, and/or dispersant/corrosion/scale inhibitor chemicals for service water and demineralized water treatment.

10.4.12 Combined License Information

10.4.12.1 Circulating Water System

The configuration of the plant circulating water system is addressed in Subsections 10.4.5.2.1, 10.4.5.2.2, and 10.4.5.5.

10.4.12.2 Condensate, Feedwater and Auxiliary Steam System Chemistry Control

The oxygen scavenging agent and pH adjuster selection for the turbine island chemical feed system is addressed in Subsection 10.4.7.2.1.

10.4.12.3 Potable Water

Potable water is produced on site by the Potable Water System (PWS). Source water for the PWS is from the well water subsystem to the Raw Water System. Sodium hypochlorite is used as the biocide. The PWS is discussed in Subsection 9.2.5.

10.4.13 References

1. ASME Performance Test Code 19.11, 1970.

2. Heat Exchange Institute Performance Standard for Liquid Ring Vacuum Pumps.

3. American Water Works Association, Code 504-80, Rubber Seated Butterfly Valves.

201. Nuclear Energy Institute, "Steam Generator Program Guidelines," NEI 97-06, Revision 2, May 2005.

Table 10.4.1-1
Main Condenser Design Data

Condenser Data	
Condenser type	Multipressure, Single pass
Hotwell storage capacity	3 min
Heat transfer	7,540 x 10^6 Btu/hr
Design operating pressure (average of all shells)	2.9 in.-Hg
Shell pressure (design)	0 in.-Hg absolute to 15 psig
Circulating water flow	600,000 gpm
Water box pressure (design)	90 psig
Tube-side inlet temperature	91°F
Approximate Tube-side temperature rise	25.2°F
Condenser outlet temperature	116.2°F
Waterbox material	Carbon Steel
Condenser Tube Data	
Tube material (main section)	Titanium(1)
Tube size	1″ O.D. – 23 BWG
Tube material (periphery)	Titanium(1)
Tube size	1″ O.D. – 23 BWG
Tube sheet material	Titanium or Titanium Clad Carbon Steel(2)
Support plates	Modular Design/Carbon Steel

Note:
1. For fresh water plants, an equivalent tube material such as 304L, 316L, 904L, or AL-6X may be substituted.
2. If one of the alternate tube materials is used, the tube sheet shall be carbon steel, clad with the same material as the tubes.

Table 10.4.5-1
Design Parameters for Major
Circulating Water System Components

Circulating Water Pump	
Quantity	Four per unit
Flow rate (gal/min)	156,200 (note 2)
Natural Draft Cooling Tower	
Quantity	One per unit
Approach temperature (°F)	13.6
Inlet temperature (°F)	116.4 (note 3)
Outlet temperature (°F)	90.6
Approximate Temperature range (°F)	25.8
Flow rate (gal/min)	622,000
Heat transfer (Btu/hr)	$7{,}628 \times 10^6$ (note 3)
Wind velocity design (mph) Seismic design criteria per Uniform Building Code	110

Notes:
1. Not used.
2. Nominal CWS pump flow rate includes blowdown (2,801 gpm) which is discharged from the pump discharge common header. This flow rate (156,200 gpm) is the minimum flow rate needed to meet system design requirements.
3. The inlet temperature (°F) is approximately 114.9°F, as the condenser outlet flow is expected to be cooled by the return flow stream from the TCS.

Table 10.4.7-1 (Sheet 1 of 2)
Condensate and Feedwater System Component Failure Analysis

Component	Failure Effect on Train	Failure Effect on System	Failure Effect on RCS
1. SGS PL V057A (MFIV)	1a. Valve fails closed or fails to open on command. Train “A” is not available for FW flow to SG “A.”	FW Train “B” available. SFW Train “A” available.	None. Decay heat removal is maintained via PRHR actuation on ESF signal. SFW available to provide flow to SG “A.”
	1b. Valve fails open or fails to close on command. Trains “A” and “B” are available for FW flow. Isolation function of V057A is not available. Redundant power division closure of MFIV provided for reliability; backup isolation provided by V058A and V250A.	Valve V250A (MFCV) provides backup isolation to terminate feedwater flow. Check valve V058A provides redundant feedwater blowdown isolation from SG “A;” redundant containment isolation provided by SG and feedwater line inside containment.	None. RCS integrity is maintained by valve V058A/V250A available to prevent SG “A” blowdown. Decay heat removal available via PRHR and SFW actuated by ESF signal. SG overfill protection provided by backup isolation of V250A.
2. SGS PL V057B (MFIV)	2a. Same as except for SG “B.”	FW Train “A” available. SFW Train “B” available.	Same as 1a except for SG “B.”
	2b. Same as 1B except isolation function of V057B is not available.	Same as 1b except for “B” train valves and SG “B.”	Same as 1b except for “B” train valves and SG “B.”
3. SGS PL V250A (MFCV)	3a. Valve fails closed or fails to open on command. Train “A” is not available for FW flow to SG “A.”	FW Train “B” available. SFW Train “A” available.	None. Decay heat removal is maintained via PRHR actuation on ESF signal. SFW available to provide flow to SG “A.”
	3b. Valve fails open or fails to close on command. Trains “A” and “B” are available for FW flow without flow control to SG “A.” Backup isolation provided by V058A and V057A.	Valve V057A (MFIV) provides backup isolation to terminate feedwater flow. Check valve V058A and V057A provide redundant feedwater blowdown isolation from SG “A.” SFW train “A” and “B” available for decay heat removal.	None. RCS integrity is maintained by valve V057A and V058A closure to limit SG blowdown. Decay heat removal available via PRHR and SFW actuated by ESF signal. SG overfill protection provided by redundant isolation of V057A.

Table 10.4.7-1 (Sheet 2 of 2)
Condensate and Feedwater System Component Failure Analysis

Component	Failure Effect on Train	Failure Effect on System	Failure Effect on RCS
4. SGS PL V250B (MFCV)	4a. Same as 3a, except for train “B” and SG “B.”	Same as 3a except train “B.”	Same as 3a except for SG “B.”
	4b. Same as 3b, except for SG “B” and valves V057B and V058B.	Same as 3b except valves V057B and V058B and SG “B.”	Same as 3b except for V057B and V058B.

Table 10.4.9-1 (Sheet 1 of 2)
Startup Feedwater System Component Failure Analysis

Component	Failure Effect on Train	Failure Effect on System	Failure Effect on RCS
1. SGS PL V255A (SFCV)	1a. Valve fails closed or fails to open on command. SFW Flow is not available to SG A.	System is not available for SFW supply to SG “A.”	None. Decay heat removal is maintained via PRHR actuation on ESF signal.
	1b. Valve fails open or fails to close on command. SFW flow is uncontrolled.	Downstream isolation valve V067A trips closed on high SG level; system pumps are tripped on high SG level.	None. RCS integrity is maintained by V067A closure and main feedwater isolation. SG overfill terminated by ESF closure of V067A.
2. SGS PL V225B (SFCV)	2a. Same as 1a except flow is not available to SG B.	System is not available for SFW supply to SG “B.”	None. Same as 1a.
	2b. Same as 1b.	Same as 1b except valve V067B trips closed on high SG level.	Same as 1b except RCS integrity is maintained by V067B and main feedwater isolation, and overfill terminated by closure of V067B.
3. SGS PL V067A (SFIV)	3a. Valve fails closed. SFW flow is not available to SG A.	System is not available for SFW supply to SG “A.”	None. Same as 1a.
	3b. Valve fails open. Isolation function of V067A is not available; backup isolation provided by V0255A and V256A.	None. Valve V255A is automatically closed and SFW pumps tripped on an ESF signal. SG overfill protection provided by automatic isolation of V255A.	None. RCS integrity is maintained by V255A closure to limit cooldown; PRHR available for decay heat removal and SG overfill protection provided by redundant isolation of V255A.

Table 10.4.9-1 (Sheet 2 of 2)
Startup Feedwater System Component Failure Analysis

Component	Failure Effect on Train	Failure Effect on System	Failure Effect on RCS
4. SGS PL V067B (SFIV)	4a. Same as 3a except flow not available to SG “B.”	Same as 3a except SFW supply not available to SG “B.”	Same as 1a.
	4b. Same as 3b.	Same as 3b except reference valve is V255B.	Same as 3b except reference valve is V255B.

Table 10.4.9-2
Nominal Component Design Data – Startup Feedwater System

Startup Feedwater Pump	
Type	Multi-stage, centrifugal
Driver	Electric Motor
Quantity	2
Capacity	520 gpm @ 80°F
Head	3250 ft
Motor hp	800

Table 10.4-201
Not Used

Table 10.4-202
Not Used

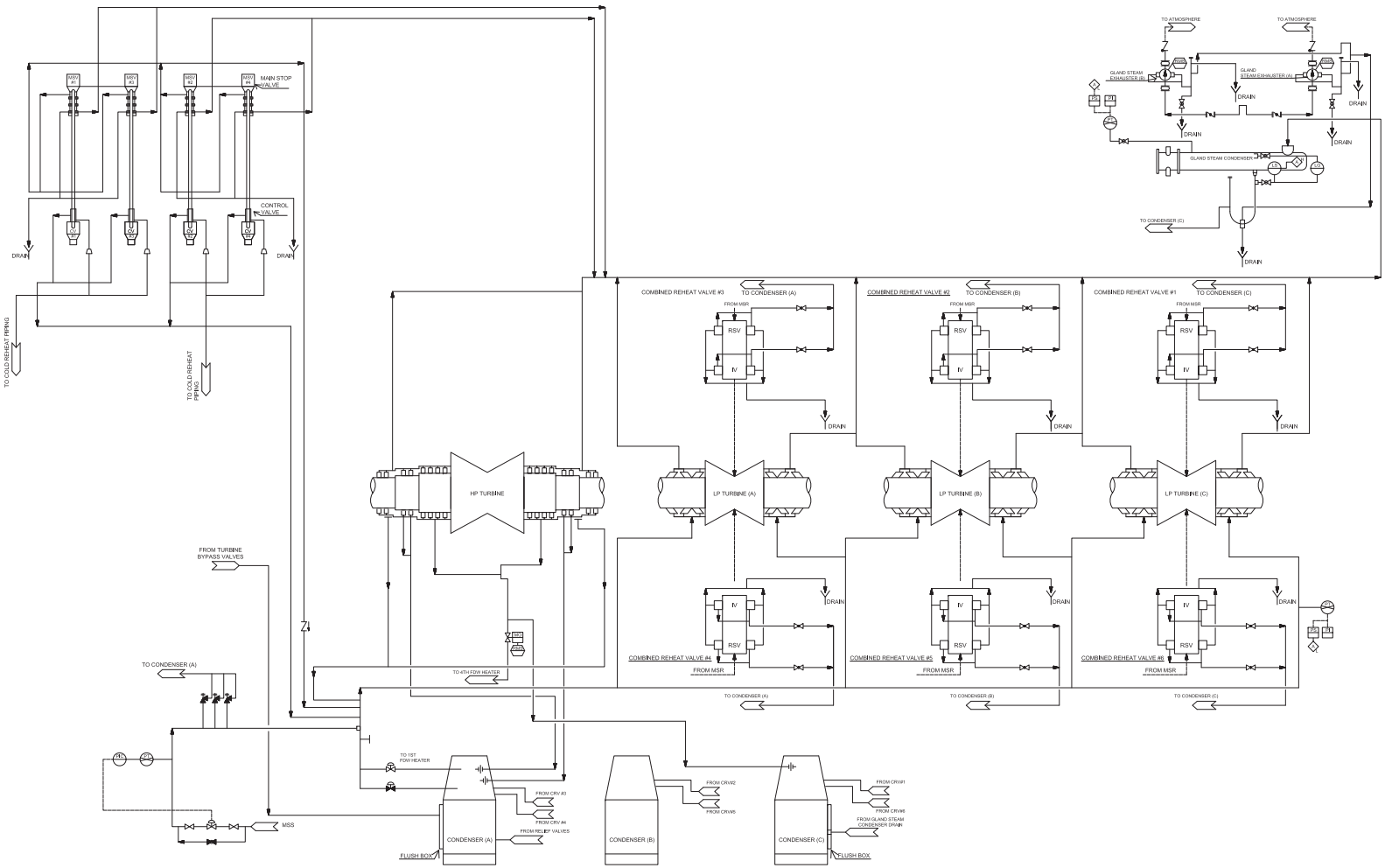

Figure represents system functional arrangement. Details internal to the system may differ as a result of implementation factors such as vendor-specific component requirements.

Figure 10.4.3-1
Gland Seal System
Piping and Instrumental Diagram
(REF) GSS 001, 002

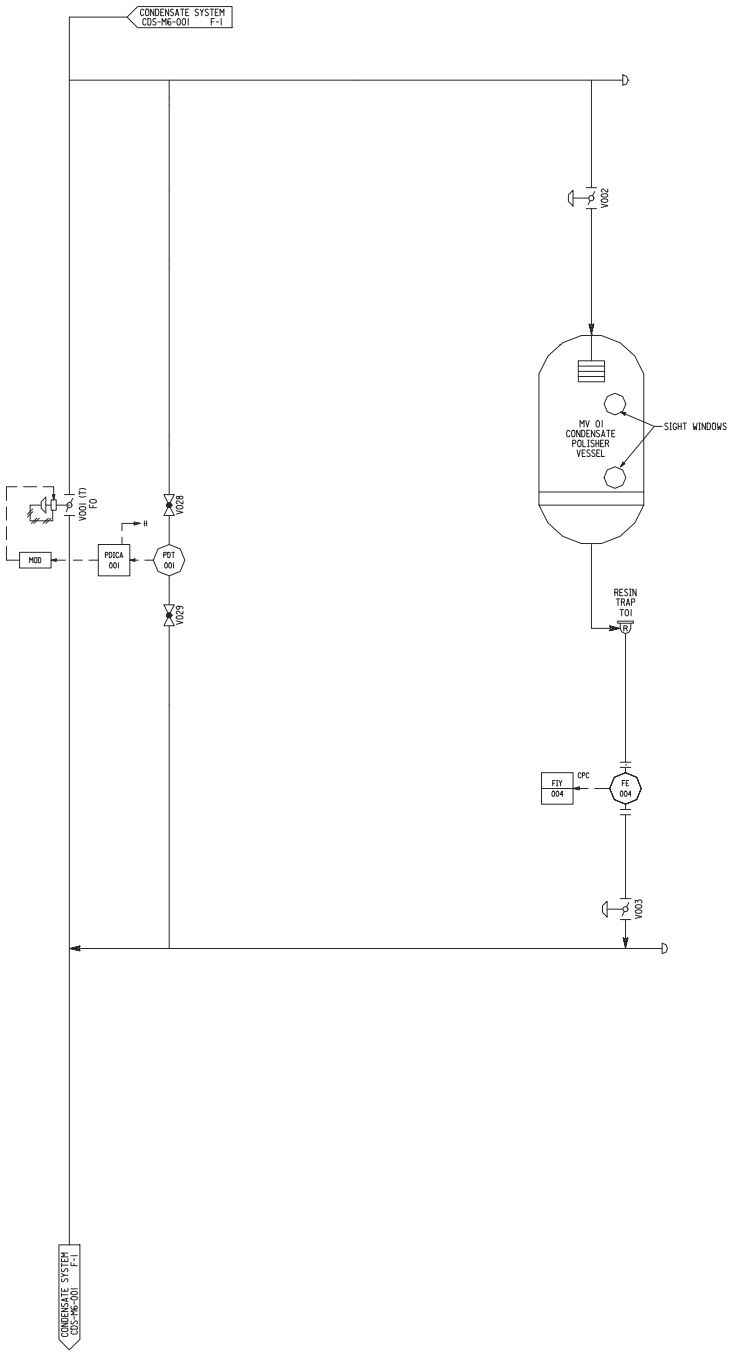

Figure represents system functional arrangement. Details internal to the system may differ as a result of implementation factors such as vendor-specific component requirements.

Inside Turbine Building

Figure 10.4.6-1
Condensate Polishing System
Piping and Instrumentation Diagram (Typical)

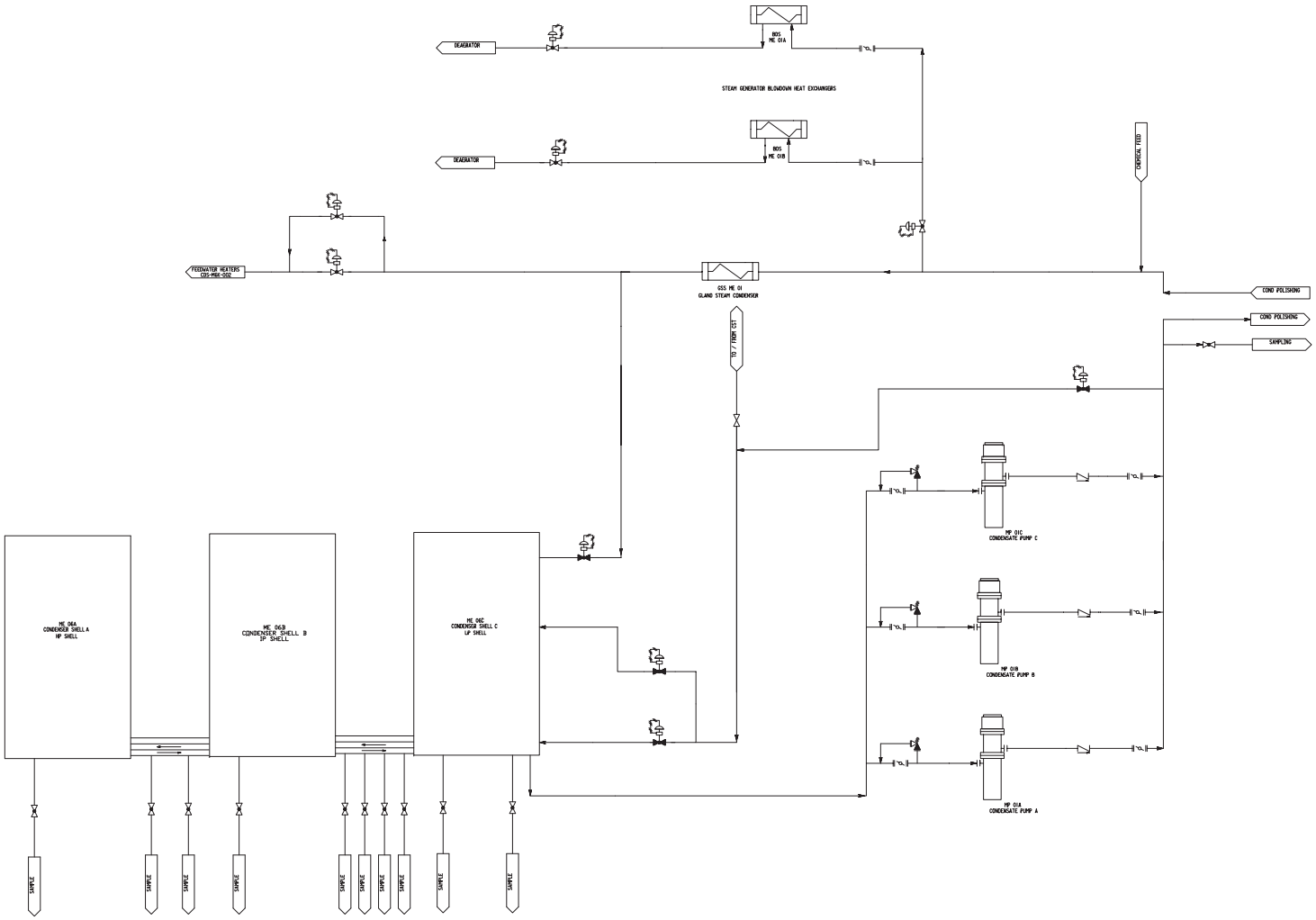

Figure represents system functional arrangement. Details internal to the system may differ as a result of implementation factors such as vendor-specific component requirements.

Figure 10.4.7-1 (Sheet 1 of 4)
Condensate and Feedwater System Piping and Instrumentation Diagram

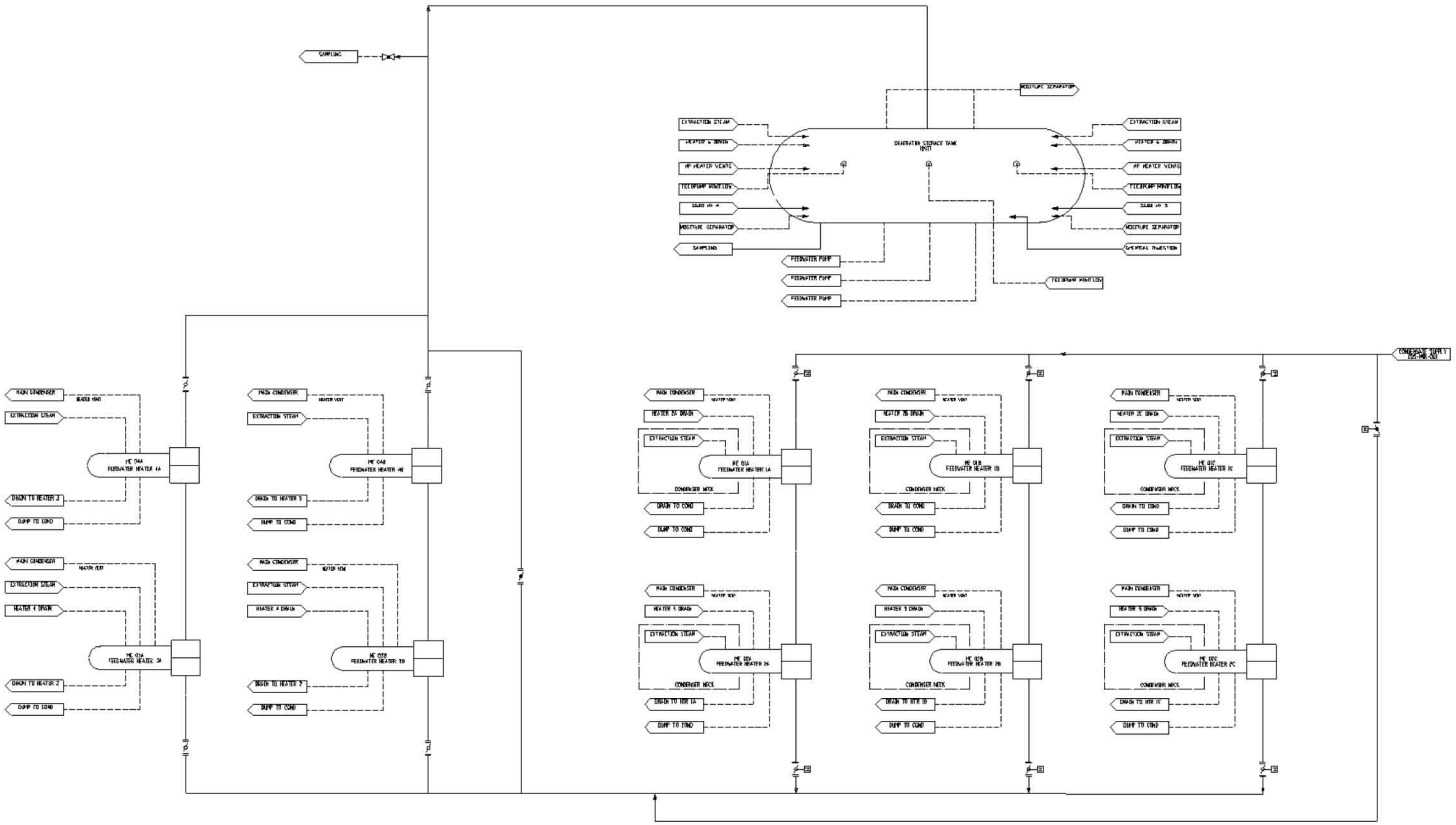

Figure represents system functional arrangement. Details internal to the system may differ as a result of implementation factors such as vendor-specific component requirements.

Figure 10.4.7-1 (Sheet 2 of 4)
Condensate and Feedwater System
Piping and Instrumentation Diagram

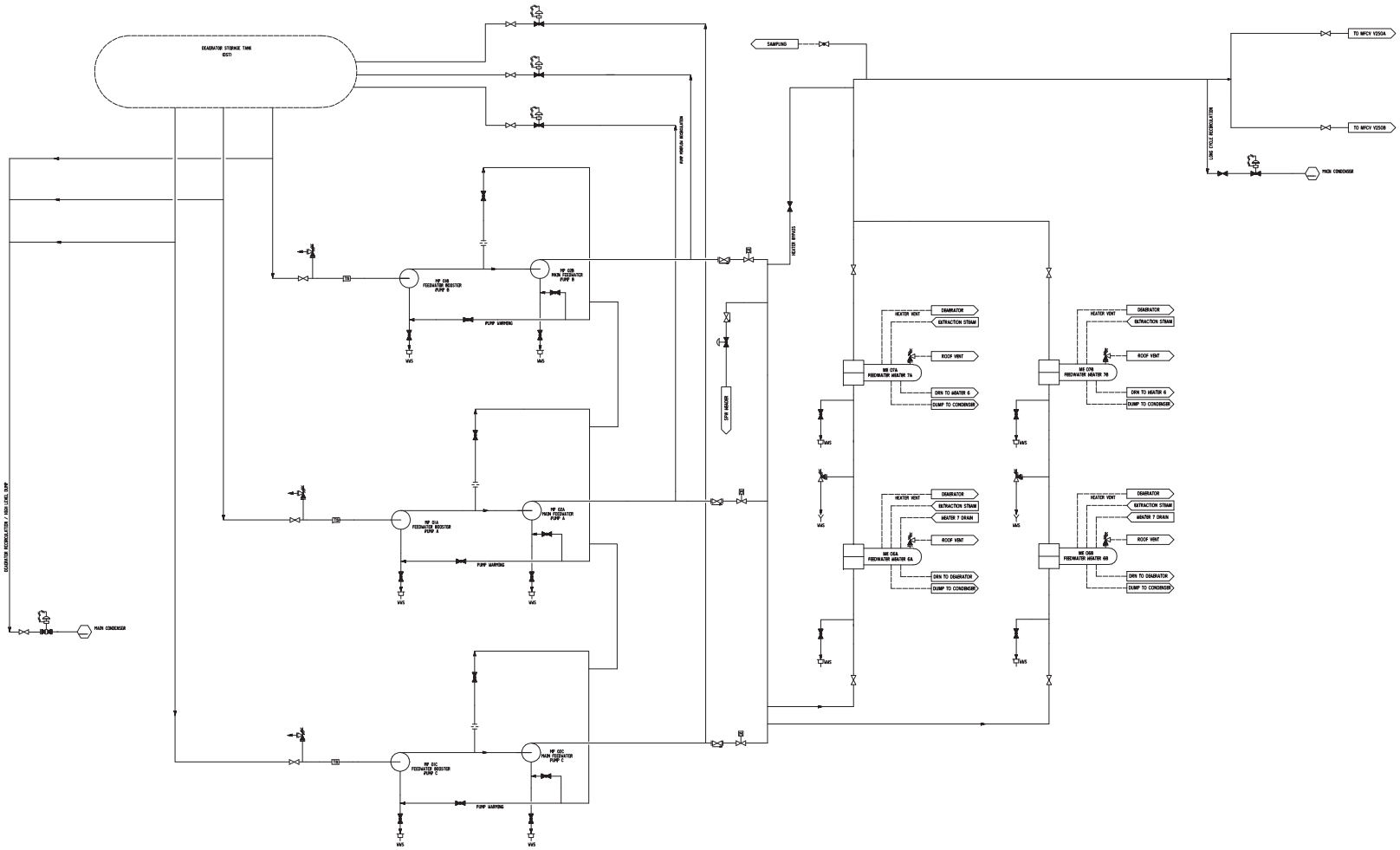

Figure represents system functional arrangement. Details internal to the system may differ as a result of implementation factors such as vendor-specific component requirements.

Figure 10.4.7-1 (Sheet 3 of 4)
Condensate and Feedwater System Piping and Instrumentation Diagram

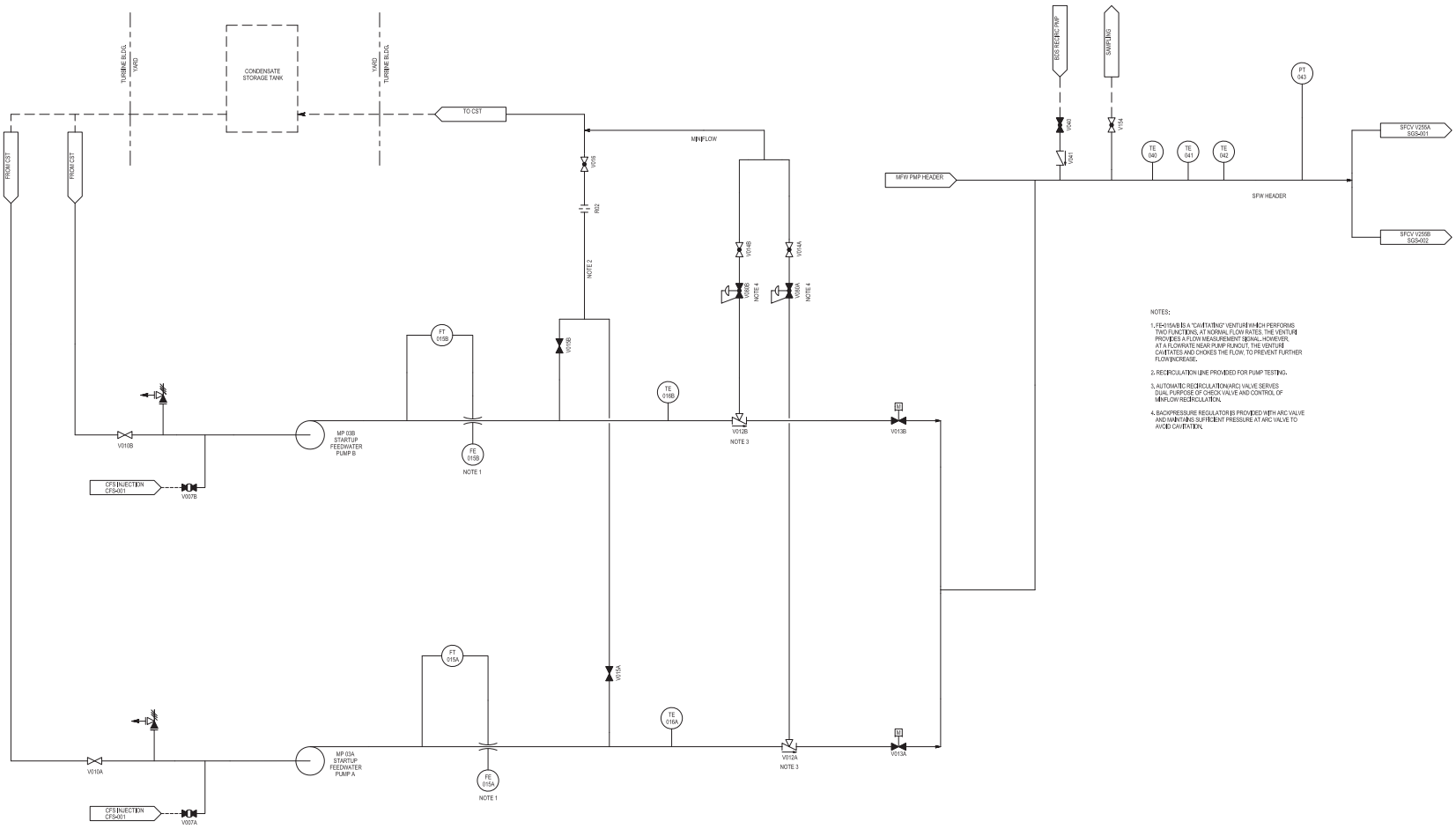

Figure 10.4.7-1 (Sheet 4 of 4)
Simplified Condensate and Feedwater System Piping and Instrumentation Diagram (REF) FWS 002

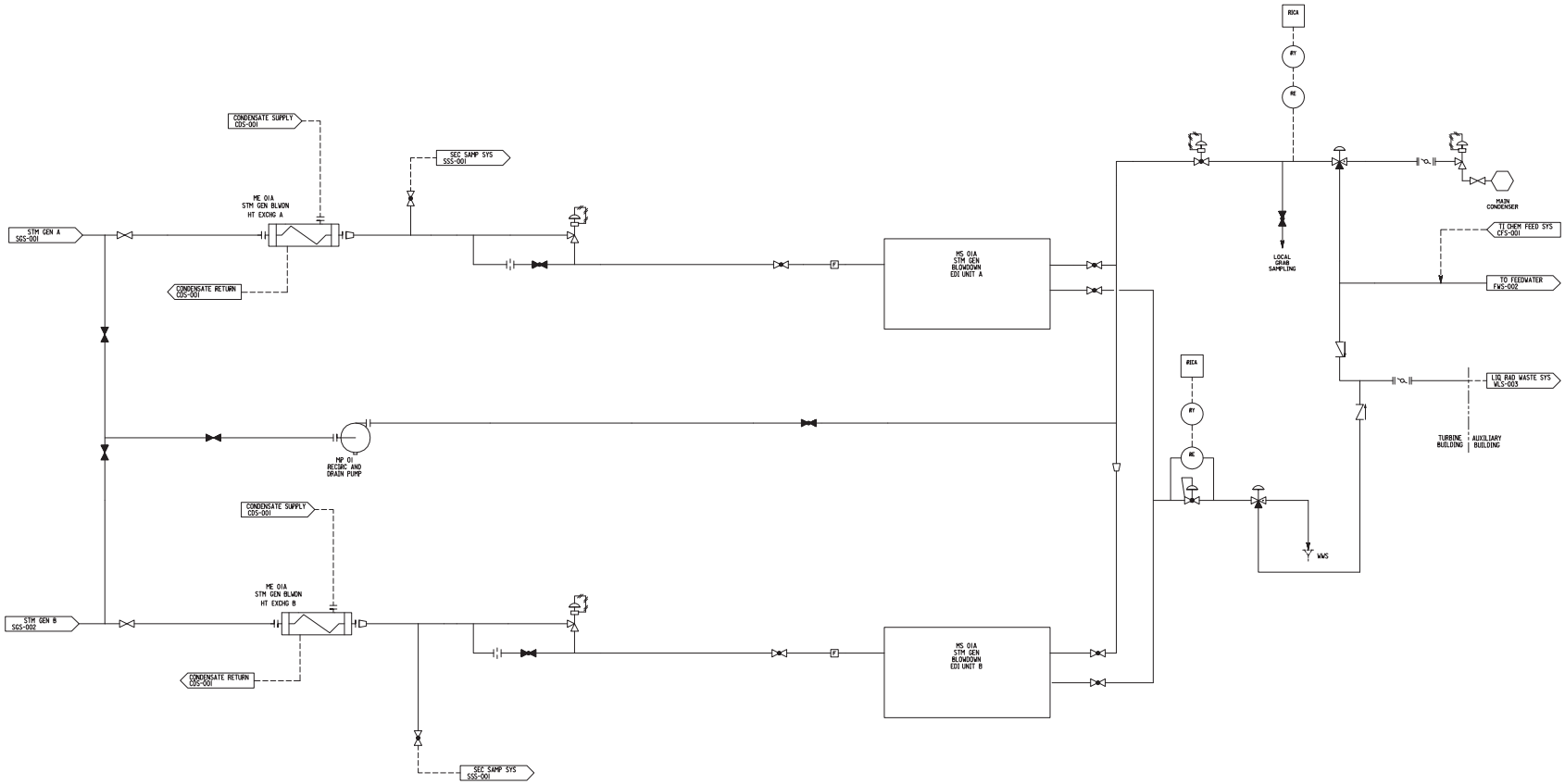

Figure represents system functional arrangement. Details internal to the system may differ as a result of implementation factors such as vendor-specific component requirements.

Inside Turbine Building
Figure 10.4.8-1
Steam Generator Blowdown System Piping and Instrumentation Diagram

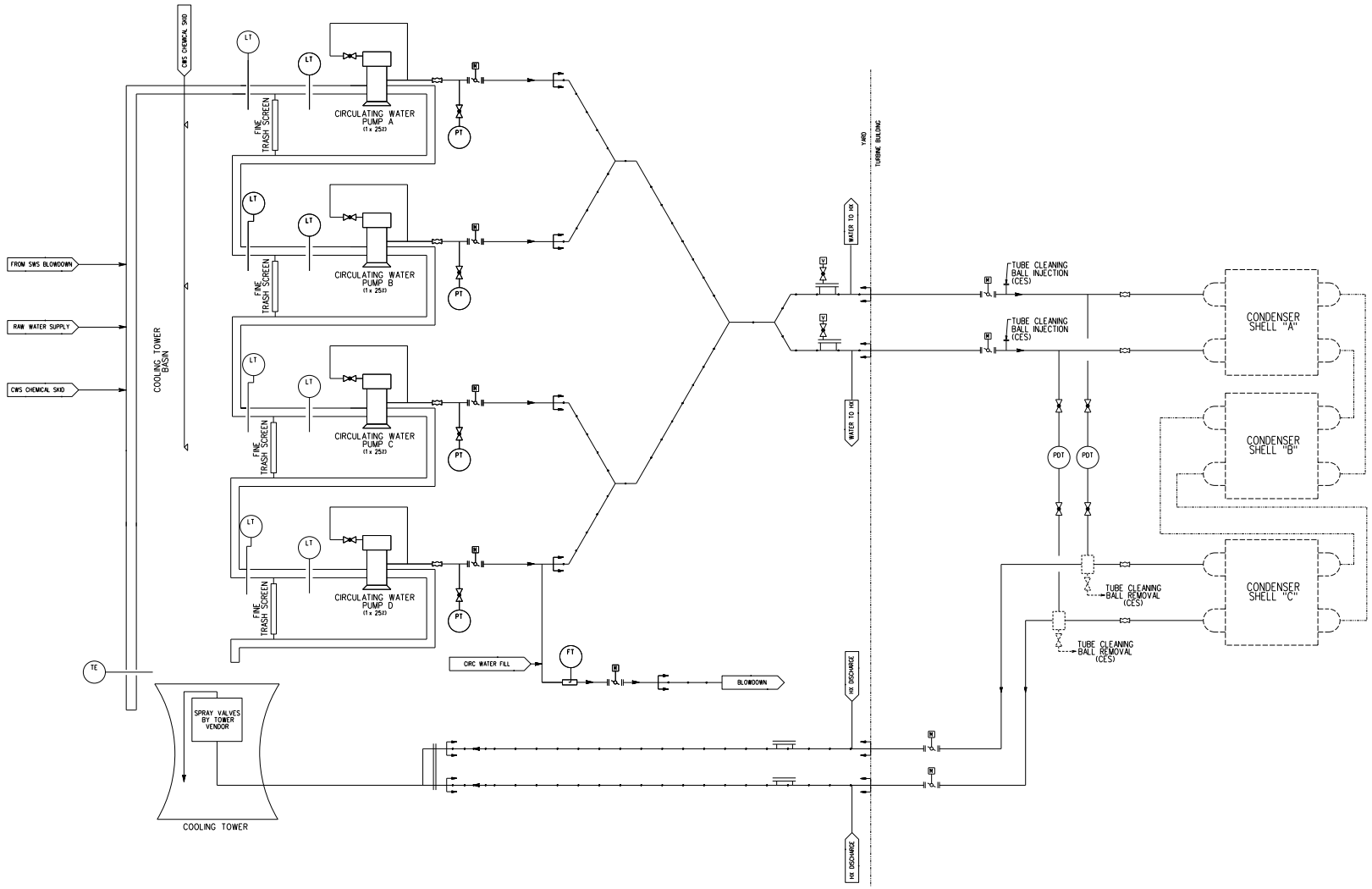

Figure 10.4-201
Circulating Water System Diagram