CHAPTER 5.0 - REACTOR COOLANT SYSTEM AND CONNECTED SYSTEMS

TABLE OF CONTENTS

	PAGE
5.0 REACTOR COOLANT SYSTEM AND CONNECTED SYSTEMS	5.1-1
5.1 SUMMARY DESCRIPTION	5.1-1
5.1.1 Schematic Flow Diagram	5.1-6
5.1.2 Piping and Instrumentation Diagrams	5.1-6
5.1.3 Elevation Drawings	5.1-6
5.2 INTEGRITY OF REACTOR COOLANT PRESSURE BOUNDARY	5.2-1
5.2.1 Compliance with Codes and Code Cases	5.2-1
5.2.1.1 Compliance with 10 CFR 50.55a	5.2-1
5.2.1.2 Applicable Code Cases	5.2-2
5.2.2 Overpressurization Protection	5.2-3
5.2.2.1 Design Bases	5.2-3
5.2.2.2 Design Evaluation	5.2-4
5.2.2.3 Piping and Instrumentation Diagrams	5.2-5
5.2.2.4 Equipment and Component Description	5.2-6
5.2.2.5 Mounting of Pressure-Relief Devices	5.2-6
5.2.2.5.1 Design and Installation Details	5.2-6
5.2.2.5.1.1 Pressurizer Safety Valves and Power-Operated Relief Valves	5.2-6
5.2.2.5.1.2 Main Steam Safety Valves and Power-Operated Relief Valves	5.2-6
5.2.2.5.2 Design Bases for Assumed Loads	5.2-6
5.2.2.5.3 Maximum Stress	5.2-7
5.2.2.6 Applicable Codes and Classifications	5.2-7
5.2.2.7 Material Specifications	5.2-8
5.2.2.8 Process Instrumentation	5.2-8
5.2.2.9 System Reliability	5.2-8
5.2.2.10 Testing and Inspection	5.2-8
5.2.2.11 RCS Pressure Control During Low Temperature Operation	5.2-8
5.2.2.11.1 System Operation	5.2-9
5.2.2.11.2 Evaluation of Low Temperature Overpressure Transients	5.2-9
5.2.2.11.3 Procedures	5.2-13
5.2.3 Reactor Coolant Pressure Boundary Materials	5.2-15
5.2.3.1 Material Specifications	5.2-15
5.2.3.2 Capability with Reactor Coolant	5.2-16
5.2.3.2.1 Chemistry of Reactor Coolant	5.2-16
5.2.3.2.2 Compatibility of Construction Materials with Reactor Coolant	5.2-18
5.2.3.2.3 Compatibility with External Insulation and Environmental Atmosphere	5.2-18

TABLE OF CONTENTS (Cont'd)

5.2.3.3 Fabrication and Processing of Ferritic Materials 5.2-19
5.2.3.3.1 Fracture Toughness 5.2-19
5.2.3.3.2 Control of Welding 5.2-19
5.2.3.4 Fabrication and Processing of Austenitic Stainless Steel 5.2-20
5.2.3.4.1 Cleaning and Contamination Protection Procedures 5.2-20
5.2.3.4.2 Solution Heat Treatment Requirements 5.2-21
5.2.3.4.3 Material Inspection Program 5.2-21
5.2.3.4.4 Prevention of Intergranular Attack of Unstabilized Austenitic Stainless Steels 5.2-22
5.2.3.4.5 Retesting Unstabilized Austenitic Stainless Steels Exposed to Sensitization Temperatures 5.2-25
5.2.3.4.6 Control of Welding 5.2-25
5.2.4 Inservice Inspection and Testing of Reactor Coolant Pressure Boundary 5.2-27
5.2.5 Detection of Leakage Through Coolant Pressure Boundary 5.2-29
5.2.5.1 Reactor Cavity and Containment Floor Drain Sumps 5.2-30
5.2.5.2 Containment Radiation Monitoring 5.2-31
5.2.5.2.1 Radiation Monitor Sensitivity/Response Time 5.2-32
5.2.5.2.2 Leak Before Break Considerations 5.2-32
5.2.5.3 Containment Atmosphere Monitoring 5.2-32
5.2.5.4 Intersystem Leakage 5.2-32a
5.2.5.5 Intersystem Leakage Monitoring 5.2-34
5.2.5.6 Limiting Conditions for Operation 5.2-35
5.2.5.7 Intersystem Leakage Testing 5.2.35
5.2.5.8 Reactor Vessel Flange Leakage Monitoring 5.2-35
5.2.5.9 Calibration and Operability Tests During Plant Operation 5.2-36
5.2.6 References 5.2-37

5.3 REACTOR VESSEL 5.3-1

5.3.1 Reactor Vessel Materials 5.3-1
5.3.1.1 Material Specifications 5.3-1
5.3.1.2 Special Processes Used for Manufacturing and Fabrication 5.3-1
5.3.1.3 Special Methods for Nondestructive Examination 5.3-2
5.3.1.3.1 Ultrasonic Examination 5.3-2
5.3.1.3.2 Penetrant Examinations 5.3-2
5.3.1.3.3 Magnetic Particle Examination 5.3-2
5.3.1.4 Special Controls for Ferritic and Austenitic Stainless Steels 5.3-3
5.3.1.5 Fracture Toughness 5.3-3
5.3.1.5.1 Pressurized Thermal Shock Evaluation 5.3-4
5.3.1.6 Material Surveillance 5.3-4
5.3.1.6.1 Measurement of Integrated Fast Neutron (E>1.0MeV) Flux at the Irradiation Samples 5.3-6
5.3.1.6.1.1 Determination of Sensor Reaction Rates
5.3.1.6.1.2 Corrections to Reaction Rate Data
5.3.1.6.1.3 Least Squares Adjustment Procedure

TABLE OF CONTENTS (Cont'd)

5.3.1.6.2 Calculation of Integrated Fast Neutron (E>1.0MeV) Flux at the Irradiation Samples 5.3-8
5.3.1.7 Reactor Vessel Fasteners 5.3-8

TABLE OF CONTENTS (Cont'd)

5.3.2	Pressure-Temperature Limits	5.3-9
5.3.2.1	Limit Curves	5.3-9
5.3.2.2	Operating Procedures	5.3-10
5.3.3	Reactor Vessel Integrity	5.3-10
5.3.3.1	Design	5.3-10
5.3.3.2	Materials of Construction	5.3-11
5.3.3.3	Fabrication Methods	5.3-11
5.3.3.4	Inspection Requirements	5.3-11
5.3.3.5	Shipment and Installation	5.3-12
5.3.3.6	Operating Conditions	5.3-12
5.3.3.7	Inservice Surveillance	5.3-12
5.3.4	References	5.3-14
5.4	COMPONENT AND SUBSYSTEM DESIGN	5.4-1
5.4.1	Reactor Coolant Pumps	5.4-1
5.4.1.1	General	5.4-1
5.4.1.2	Design Description	5.4-1
5.4.1.3	Design Evaluation	5.4-3
5.4.1.3.1	Pump Performance	5.4-3
5.4.1.3.2	Coastdown Capability	5.4-4
5.4.1.3.3	Bearing Integrity	5.4-4
5.4.1.3.4	Locked Rotor or Loss of CCW	5.4-5
5.4.1.3.5	Critical Speed	5.4-7
5.4.1.3.6	Missile Generation	5.4-7
5.4.1.3.7	Pump Cavitation	5.4-7
5.4.1.3.8	Pump Overspeed Considerations	5.4-8
5.4.1.3.9	Antireverse Rotation Device	5.4-8
5.4.1.3.10	Shaft Seal Leakage	5.4-8
5.4.1.3.11	Seal Discharge Piping	5.4-13
5.4.1.4	Tests and Inspections	5.4-13
5.4.1.5	Pump Flywheels	5.4-14
5.4.1.5.1	Design Bases	5.4-14
5.4.1.5.2	Fabrication and Inspection	5.4-14
5.4.1.5.3	Material Acceptance Criteria	5.4-15
5.4.2	Steam Generators	5.4-15
5.4.2.1	Steam Generator Materials	5.4-15
5.4.2.1.1	Selection and Fabrication of Materials	5.4-15
5.4.2.1.2	Steam Generator Design Effects on Materials	5.4-16
5.4.2.1.3	Compatibility of Steam Generator Tubing with Primary and Secondary Coolants	5.4-16
5.4.2.1.4	Cleanup of Secondary Side Materials	5.4-18
5.4.2.2	Steam Generator Inservice Inspection	5.4-18
5.4.2.3	Design Bases	5.4-18
5.4.2.4	Design Description	5.4-20
5.4.2.5	Design Evaluation	5.4-20
5.4.2.5.1	Forced Convection	5.4-20
5.4.2.5.2	Natural Circulation Flow	5.4-21
5.4.2.5.3	Mechanical and Flow-Induced Vibration Under Normal Operation	5.4-21
5.4.2.5.4	Allowable Tube Wall Thinning Under Accident Conditions	5.4-23
5.4.2.6	Tests and Inspection	5.4-24

TABLE OF CONTENTS (Cont'd)

5.4.3	Reactor Coolant Piping	5.4-25
5.4.3.1	Design Bases	5.4-25
5.4.3.2	Design Description	5.4-26
5.4.3.3	Design Evaluation	5.4-29
5.4.3.3.1	Material Corrosion/Erosion Evaluation	5.4-29
5.4.3.3.2	Sensitized Stainless Steel	5.4-30
5.4.3.3.3	Contaminant Control	5.4-30
5.4.3.4	Tests and Inspections	5.4-30
5.4.4	Main Steamline Flow Restrictions	5.4-31
5.4.4.1	Design Bases	5.4-31
5.4.4.2	Design Description	5.4-31
5.4.4.3	Design Evaluation	5.4-31
5.4.4.4	Tests and Inspections	5.4-31
5.4.5	Main Steamline Isolation System (BWRs Only)	5.4-31
5.4.6	Reactor Core Isolation Cooling System (BWRs Only)	5.4-32
5.4.7	Residual Heat Removal System	5.4-32
5.4.7.1	Design Bases	5.4-32
5.4.7.2	System Design	5.4-34
5.4.7.2.1	Schematic Piping and Instrumentation Diagrams	5.4-34
5.4.7.2.2	Equipment and Component Descriptions	5.4-37
5.4.7.2.3	Control	5.4-38
5.4.7.2.4	Applicable Codes and Classifications	5.4-40
5.4.7.2.5	System Reliability Considerations	5.4-40
5.4.7.2.6	Manual Actions	5.4-46
5.4.7.2.7	System Operation	5.4-47
5.4.7.3	Performance Evaluation	5.4-56
5.4.7.4	Tests and Inspections	5.4-57
5.4.8	Reactor Water Cleanup System (BWRs Only)	5.4-59
5.4.9	Main Steam Line and Feedwater Piping	5.4-59
5.4.10	Pressurizer	5.4-60
5.4.10.1	Design Bases	5.4-60
5.4.10.1.1	Pressurizer Surge Line	5.4-60
5.4.10.1.2	Pressurizer Volume	5.4-60
5.4.10.2	Design Description	5.4-61
5.4.10.2.1	Pressurizer Surge Line	5.4-61
5.4.10.2.2	Pressurizer Vessel	5.4-61
5.4.10.3	Design Evaluation	5.4-62
5.4.10.3.1	System Pressure	5.4-62
5.4.10.3.2	Pressurizer Performance	5.4-63
5.4.10.3.3	Pressure Setpoints	5.4-63
5.4.10.3.4	Pressurizer Spray	5.4-63
5.4.10.3.5	Pressurizer Design Analysis	5.4-64
5.4.10.4	Tests and Inspections	5.4-65
5.4.11	Pressurizer Relief Discharge System	5.4-66
5.4.11.1	Design Bases	5.4-66
5.4.11.2	System Description	5.4-66
5.4.11.3	Safety Evaluation	5.4-67
5.4.11.4	Instrumentation Requirements	5.4-68
5.4.11.5	Inspection and Testing Requirements	5.4-68

TABLE OF CONTENTS (Cont'd)

5.4.12	Valves	5.4-69
5.4.12.1	Design Bases	5.4-69
5.4.12.2	Design Description	5.4-69
5.4.12.3	Design Evaluations	5.4-70
5.4.12.4	Tests and Inspections	5.4-70
5.4.13	Safety and Relief Valves	5.4-70
5.4.13.1	Design Bases	5.4-70
5.4.13.2	Design Description	5.4-71
5.4.13.3	Design Evaluation	5.4-72
5.4.13.4	Tests and Inspections	5.4-72
5.4.14	Component Supports	5.4-73
5.4.14.1	Reactor Vessel Supports	5.4-73
5.4.14.2	Pressurizer Support	5.4-73
5.4.14.3	Steam Generator Support	5.4-73
5.4.14.4	Reactor Coolant Pump Support	5.4-73
5.4.14.5	Design Criteria for Component Supports	5.4-73
5.4.15	References	5.4-73

CHAPTER 5.0 - REACTOR COOLANT SYSTEM AND CONNECTED SYSTEMS

LIST OF TABLES

NUMBER	TITLE	PAGE
5.1-1	System Design and Operating Parameters	5.1-7
5.1-1a	RCS Component Volume Data	5.1-10
5.2-1	Applicable Code Addenda for RCS Components	5.2-38
5.2-1a	ASME Code Cases Used on Class 1 Components	5.2-39
5.2-2	Class 1 Primary Components Material Specifications	5.2-40
5.2-3	Class 1 and 2 Auxiliary Components Material Specifications	5.2-43
5.2-4	Reactor Vessels Internals for Emergency Core Cooling	5.2-45
5.3-1	Reactor Vessel Nondestructive Examination During Fabrication	5.3-15
5.3-2	Reactor Vessel Design Parameters	5.3-17
5.3-3a	Byron Unit 1 Closure Heat Bolting Material Properties Closure Head Studs	5.3-18
5.3-3b	Braidwood Unit 1 Closure Head Bolting Material Properties Closure Head Studs	5.3-19
5.3-4	(Deleted)	5.3-20
5.3-5	(Deleted)	5.3-20
5.3-6	(Deleted)	5.3-20
5.3-7	Byron Unit 1 Pressurized Thermal Shock (PTS) Evaluation	5.3-21
5.3-8	Byron Unit 2 Pressurized Thermal Shock (PTS) Evaluation	5.3-22
5.3-9	Braidwood Unit 1 Pressurized Thermal Shock Evaluation	5.3-23
5.3-10	Braidwood Unit 2 Pressurized Thermal Shock Evaluation	5.3-24
5.4-1	Reactor Coolant Pump Design Parameters	5.4-74
5.4-2	Reactor Coolant Pump NDE During Fabrication	5.4-76
5.4-3	Steam Generator Design Data	5.4-77
5.4-4	Steam Generator NDE During Fabrication (Unit 1)	5.4-78
5.4-4a	Steam Generator NDE During Fabrication (Unit 2)	5.4-79a
5.4-5	Reactor Coolant Piping Design Parameters	5.4-80
5.4-6	Reactor Coolant Piping NDE During Fabrication	5.4-81
5.4-7	Design Bases for Residual Heat Removal System Operation	5.4-82
5.4-8	Residual Heat Removal System Component Data	5.4-83
5.4-9	Pressurizer Design Data	5.4-84
5.4-10	Reactor Coolant System Design Pressure Settings	5.4-85
5.4-11	Pressurizer Quality Assurance Program	5.4-86
5.4-12	Pressurizer Relief Tank Design Data	5.4-87
5.4-13	Relief Valve Discharge to the Pressurizer Relief Tank	5.4-88
5.4-14	Reactor Coolant System Valve Design Parameters	5.4-89

LIST OF TABLES (Cont'd)

NUMBER	TITLE	PAGE
5.4-15	Reactor Coolant System Valves NDE During Fabrication	5.4-90
5.4-16	Pressurizer Valves Design Parameters	5.4-91
5.4-17	Failure Mode and Effects Analysis - Residual Heat Removal System Active Components - Plant Cooldown Operation	5.4-92
5.4-18	Single Failure Evaluation of Systems Required to Reach Cold Shutdown per BTP RSB 5-1	5.4-101
5.4-19	Summary of Systems and Equipment Required for Cold Shutdown Boration Without Letdown	5.4-105
5.4-20	Deleted	
5.4-21	Deleted	
5.4-22	Comparison of Hydraulic Resistance Coefficients	5.4-108
5.4-23	Comparison of Upper Head Region Hydraulic Resistance	5.4-109

CHAPTER 5.0 - REACTOR COOLANT SYSTEM AND CONNECTED SYSTEMS

LIST OF FIGURES

NUMBER	TITLE
5.1-1	Deleted
5.1-2	Reactor Coolant System Process Flow Diagram
5.1-3	Deleted
5.1-4	Deleted
5.2-1	Deleted
5.2-2	Deleted
5.2-3	Deleted
5.2-4	Deleted
5.2-5	Deleted
5.3-1	Reactor Vessel
5.4-1	Reactor Coolant Controlled Leakage Pump
5.4-2	Reactor Coolant Pump Estimated Performance Characteristic
5.4-3	K_{ID} Lower Bound Fracture Toughness A533V (Reference WCAP 7623) Grade B Class 1
5.4-4	Deleted
5.4-5	Pressurizer
5.4-6	Reactor Coolant Temperature vs. Time (Normal Cooldown)
5.4-7	Single RHR Train RC Temperature vs. Time
5.4-8	Pressurizer Relief Tank
5.4-9	Reactor Coolant Loop Stop Valve
5.4-10	Unit 1 Steam Generator
5.4-11	Unit 2 Steam Generator

CHAPTER 5.0 - REACTOR COOLANT SYSTEM AND CONNECTED SYSTEMS

DRAWINGS CITED IN THIS CHAPTER*

*The listed drawings are included as "General References" only; i.e., refer to the drawings to obtain additional detail or to obtain background information. These drawings are not part of the UFSAR. They are controlled by the Controlled Documents Program.

DRAWING*	SUBJECT
108D685-11	Pressurizer Pressure and Level Control Diagram
A-333	Containment Building Basement Floor Plan Area 1
A-701	Containment Building Plumbing Diagram
M-35	Diagram of Main Steam System Unit 1
M-60	Diagram of Reactor Coolant System Loops Unit 1
M-61	Diagram of Safety Injection System Unit 1
M-62	Diagram of Residual Heat Removal System Unit 1
M-64	Diagram of Chemical and Volume Control System and Boron Thermal Regeneration System Unit 1
M-64A	Diagram of Chemical and Volume Control System and Boron Thermal Regeneration System Unit 1
M-135	Diagram of Reactor Coolant System Loops Unit 2
M-196	Reactor Coolant System Loop Piping Arrangement
S-1066	Containment Building Sections and Details

CHAPTER 5.0 - REACTOR COOLANT SYSTEM AND CONNECTED SYSTEMS

5.1 SUMMARY DESCRIPTION

The reactor coolant system (RCS) shown in Drawings M-60 and M-135 and Figure 5.1-2 consists of similar heat transfer loops connected in parallel to the reactor pressure vessel. Each loop contains a reactor coolant pump, steam generator and associated piping and valves. In addition, the system includes a pressurizer, a pressurizer relief tank, interconnecting piping and instrumentation necessary for operational control; all of these components are located in the containment building.

During operation, the RCS transfers the heat generated in the core to the steam generators where steam is produced to drive the turbine generator. Borated water is circulated in the RCS at a flow rate and temperature consistent with achieving the reactor core thermal-hydraulic performance. The water also acts as a neutron moderator and reflector, and as a solvent for the neutron absorber used in chemical shim control.

The RCS pressure boundary provides a barrier against the release of radioactivity generated within the reactor and is designed to ensure a high degree of integrity throughout the life of the plant.

RCS pressure is controlled by the use of the pressurizer where water and steam are maintained in equilibrium by electrical heaters and water sprays. Steam can be formed (by the heaters) or condensed (by the pressurizer spray) to minimize pressure variations due to contraction and expansion of the reactor coolant. Spring-loaded safety valves and power-operated relief valves are mounted on the pressurizer and discharge to the pressurizer relief tank, where the steam is condensed and cooled by mixing with water.

The extent of the RCS is defined as:

a. the reactor vessel including control rod drive mechanism housings;

b. the reactor coolant side of the steam generators;

c. reactor coolant pumps;

d. a pressurizer attached to one of the reactor coolant loops;

e. the pressurizer relief tank;

f. safety and relief valves;

g. the interconnecting piping, valves and fittings between the principal components listed previously; and

h. the piping, fittings, and valves leading to connecting auxiliary or support systems up to and including the second isolation valve (from the high pressure side) on each line.

Reactor Coolant System Components

Reactor Vessel

The reactor vessel is cylindrical, with a welded hemispherical bottom head and a removable, flanged and gasketed, hemisperhical upper head. The vessel contains the core, core supporting structures, control rods, and other parts directly associated with the core.

The vessel has inlet and outlet nozzles located in a horizontal plane just below the reactor vessel flange but above the top of the core. Coolant enters the vessel through the inlet nozzles and flows down the core barrel-vessel wall annulus, turns at the bottom and flows up through the core to the outlet nozzles.

Steam Generators

The steam generators are vertical shell and U-tube evaporators with integral moisture separating equipment. The reactor coolant flows through the inverted U-tubes, entering and leaving through the nozzles located in the hemispherical bottom head of the steam generator. Steam is generated on the shell side and flows upward through the moisture separators to the outlet nozzle at the top of the steam generator.

Reactor Coolant Pumps

The reactor coolant pumps are identical single-speed centrifugal units driven by air-cooled, three-phase induction motors. The shaft is vertical with the motor mounted above the pumps. A flywheel on the shaft above the motor provides additional inertia to extend pump coastdown. The inlet is at the bottom of the pump; discharge is on the side.

Piping

The reactor coolant loop piping is specified in sizes consistent with system requirements.

The hot leg inside diameter is 29 inches and the cold leg return line to the reactor vessel is 27-1/2 inches. The piping between the steam generator and the pump suction is increased to 31 inches in diameter to reduce pressure drop and improve flow conditions to the pump suction.

Pressurizer

The pressurizer is a vertical, cylindrical vessel with hemispherical top and bottom heads. Electrical heaters are installed through the bottom head of the vessel while the spray nozzle, relief valve, and safety valve connections are located in the top head of the vessel.

Pressurizer Relief Tank

The pressurizer relief tank is a horizontal, cylindrical vessel with elliptical dished heads. Steam from the pressurizer safety and relief valves is discharged into the pressurizer relief tank through a sparger pipe under the water level. This condenses and cools the steam by mixing it with water that is near ambient temperature. To prevent exceeding its design pressure, the tank is equipped with two rupture discs sized to accommodate the combined capacity of the safety valves.

Safety and Relief Valves

The pressurizer safety valves are of the totally enclosed pop-type. The valves are spring-loaded, self-activated with backpressure compensation. The power-operated relief valves limit system pressure for large power mismatch. They are operated automatically or by remote manual control. Remotely operated valves are provided to isolate the inlet to the power-operated relief valves if excessive leakage occurs.

Loop Stop Valves

Reactor coolant loop stop valves are remotely controlled motor-operated gate valves which permit any loop to be isolated from the reactor vessel. The valves on the hot leg and the cold leg are identical except for the internal diameter of the valve ends.

Reactor Coolant System (RCS) Performance Characteristics

Tabulations of important design and performance characteristics of the RCS are provided in Table 5.1-1. Safety limits and limiting safety system settings are discussed as part of the Technical Specifications.

Reactor Coolant Flow

The reactor coolant flow, a major parameter in the design of the system and its components, is established with a detailed design procedure supported by operating plant performance data, by pump model tests and analysis, and by pressure drop tests and analyses of the reactor vessel and fuel assemblies. Data from all operating plants have indicated that the actual flow has been well above the flow specified for the thermal design of the

plant. By applying the design procedure described in the following, it is possible to specify the expected operating flow with reasonable accuracy.

Three reactor coolant flow rates are identified for the various plant design considerations. The definitions of these flows are presented in the following paragraphs.

Best Estimate Flow

The best estimate flow is the most likely value for the actual plant operating condition. This flow is based on the best estimate of the reactor vessel, steam generator and piping flow resistance, and on the best estimate of the reactor coolant pump head-flow capacity, with no uncertainties assigned to either the system flow resistance or the pump head. System pressure drops, based on best estimate flow, are presented in Table 5.1-1. Although the best estimate flow is the most likely value to be expected in operation, more conservative flow rates are applied in the thermal and mechanical designs.

Thermal Design Flow

Thermal design flow is the basis for the reactor core thermal performance, the steam generator thermal performance, and the nominal plant parameters used throughout the design. To provide the required margin, the thermal design flow accounts for the uncertainties in reactor vessel, steam generator and piping flow resistances, reactor coolant pump head, and the methods used to measure flow rate. The thermal design flow is approximately 9.8% for Byron Unit 1 and 9.6% for Braidwood Unit 1 less than best estimate flow at 5% steam generator tube plug (SGTP). Byron Unit 2 thermal design flow is 7.4% less than best estimate flow at 10% SGTP and Braidwood Unit 2 is 7.0% less at 10% SGTP. The thermal design flow is confirmed when the plant is placed in operation. Tabulations of important design and performance characteristics of the reactor coolant systems, as provided in Table 5.1-1, are based on the thermal design flow.

The minimum acceptable margin between thermal design loop flow rate and best estimate loop flow rate is 4% for Byron/Braidwood. As indicated above, the actual thermal design flow rate is more than 4% lower than the best estimate flow rate. Refer to Subsection 4.4.2.9.6 for a discussion of the uncertainties of flow rate.

Mechanical Design Flow

Mechanical design flow is the conservatively high flow used in the mechanical design of the reactor vessel internals and fuel assemblies. To ensure that a conservatively high flow is specified, the mechanical design flow is based on a reduced system resistance and on increased pump head capability. The mechanical design flow is approximately 3.2% for Byron Unit 1, 3.3% for Braidwood Unit 1, 4.6% for Byron Unit 2, and 5.1% for Braidwood Unit 2 greater than the best estimate flow. Maximum pump overspeed results in a peak reactor coolant flow of 120% of the mechanical design flow. This overspeed condition, which is coincident with a turbine-generator

overspeed of 20%, is only applicable if, when a turbine trip would be actuated, the turbine governor fails and the turbine is tripped on overspeed.

Interrelated Performance and Safety Functions

The interrelated performance and safety functions of the RCS and its major components are as follows:

a. The RCS provides sufficient heat removal capability to transfer the heat produced during and after power operation and when the reactor is subcritical, including the initial phase of plant cooldown, to the steam and power conversion system.

b. The system provides sufficient heat removal capability to transfer the heat during the subsequent phase of plant cooldown and cold shutdown to the residual heat removal system.

c. The system heat removal capability under power operation and normal operational transients, including the transition from forced to natural circulation, assures no fuel damage within the operating bounds permitted by the reactor control and protection systems.

d. The RCS contains the water used as the core neutron moderator and reflector and as a solvent for chemical shim control.

e. The system maintains the homogeneity of soluble neutron poison concentration and rate of change of coolant temperature such that uncontrolled reactivity changes do not occur.

f. The reactor vessel is an integral part of the RCS pressure boundary and is capable of accommodating the temperatures and pressures associated with the operational transients. The reactor vessel functions to support the reactor core and control rod drive mechanisms.

g. The pressurizer maintains the system pressure during operation and limits pressure transients. During the reduction or increase of plant load, reactor coolant volume changes are accommodated in the pressurizer via the surge line connected to the hot leg of one of the reactor coolant loops. Pressurizer spray is provided via connections to the cold legs of two separate loops.

h. The reactor coolant pumps supply the coolant flow necessary to remove heat from the reactor core and transfer it to the steam generators.

i. The steam generators provide steam to the turbine. The tube and tube sheet boundary are designed to prevent the transfer of activity generated within the core to the secondary system.

j. The RCS piping serves as a boundary for containing the coolant under operating temperature and pressure conditions and for limiting leakage (and activity release) to the containment atmosphere. The RCS piping contains borated water which is circulated at the flow rate and temperature consistent with achieving the reactor core thermal and hydraulic performance.

5.1.1 Schematic Flow Diagram

The reactor coolant system is shown schematically in Figure 5.1-2. Included with this figure are tabulations of principal pressures, temperatures, and the flow rate of the system under normal steady-state full power operating conditions. These parameters are based on the best estimate flow at the pump discharge. RCS volume under the above conditions is presented in Table 5.1-1.

5.1.2 Piping and Instrumentation Diagrams

A piping and instrumentation diagram of the reactor coolant system is shown on Figure 5.1-1. The diagram shows the extent of the systems located within the containment, and the points of separation between the reactor coolant system and the secondary (heat utilization) system.

5.1.3 Elevation Drawings

Drawing M-196, Sheets 1 and 2, are elevation drawings showing principal dimensions of the reactor coolant system in relation to the supporting or surrounding concrete structures.

TABLE 5.1-1

SYSTEM DESIGN AND OPERATING PARAMETERS

Plant design life, years	40
Nominal operating pressure, psia	2250
Total system volume (hot) including pressurizer and surge line, ft^3	13,620 (Unit 1) 12,340 (Unit 2)
Total system volume (cold) including pressurizer and surge line, ft^3	13,400 (Unit 1) 12,140 (Unit 2)
RCS Component Volumes	See Table 5.1-1a
System liquid volume(hot), including pressurizer water at maximum guaranteed power, ft^3	13,230 (Unit 1) 11,950 (Unit 2)
Pressurizer spray rate, gpm	900
Pressurizer heater capacity, kW	1777 (Byron Unit 1) 1754 (Braidwood Unit 1) 1777 (Braidwood Unit 2) 1732 (Byron Unit 2)
Pressurizer relief tank volume, ft^3	1800

SYSTEM THERMAL AND HYDRAULIC DATA
(Based on Thermal Design Flow)

	4 PUMPS RUNNING (ORIGINAL)	4 PUMPS**+ RUNNING (UPRATE)
NSSS power, MWt	3425	3672
Reactor power, MWt	3411	3658
Thermal design flows, gpm*		
Active loop	94,400	92,000
Idle loop	--	--
Reactor	377,600	368,000
Total reactor flow, 10^6 lb/hr	140.3	137.4

TABLE 5.1-1 (Cont'd)

	4 PUMPS RUNNING (ORIGINAL)	4 PUMPS**+ RUNNING (UPRATE) Byron/ Braidwood
Temperatures, °F		
Reactor vessel outlet	618.4	620.9
Reactor vessel inlet	558.4	555.1
Steam generator outlet	558.1	554.8
Steam generator steam	548.9(Unit 1) 543.3(Unit 2)	545.6 537.8
Feedwater	440	449.2
Steam pressure, psia	1036 (Unit 1) 990 (Unit 2)	1008 945
Total steam flow, 10^6 lb/hr	15.13 (Unit 1) 15.13 (Unit 2)	16.43 16.42
Best estimate flows, gpm*		
Active loop	101,200 (Unit 1) 100,100 (Unit 2)	103,700/ 103,600 102,300/ 101,800
Idle loop	--	
Reactor	404,800 (Unit 1) 400,400 (Unit 2)	414,800/ 414,400 409,200/ 407,200
Mechanical design flows, gpm*		
Active loop	107,000 (Unit 1) 104,000 (Unit 2)	107,000 107,000
Idle loop	--	
Reactor	421,000 (Unit 1)*** 416,000 (Unit 2)	421,000 421,000

TABLE 5.1-1 (Cont'd)

UNIT 1 SYSTEM PRESSURE DROPS+
(Based on Four-Loop Best Estimate Flow)

	Byron/Braidwood
Reactor vessel ΔP, psi	48.3/48.2
Steam generator ΔP, psi	35.8/35.7
Hot leg piping ΔP, psi	2.4
Pump suction piping ΔP, psi	3.4
Cold leg piping ΔP, psi	4.7/4.6
Pump head, feet	289/288

UNIT 2 SYSTEM PRESSURE DROPS+
(Based on Four-Loop Best Estimate Flow)

	Byron/Braidwood
Reactor vessel ΔP, psi	47.0/46.6
Steam generator ΔP, psi	39.2/38.8
Hot leg piping ΔP, psi	2.4
Pump suction piping ΔP, psi	3.4
Cold leg piping ΔP, psi	4.5
Pump head, feet	294/292

*Based on pump discharge temperature, T_{cold}

**As a result of special programs to reduce primary side temperatures and flow rates, evaluations and analyses have been performed to justify operation within a range of primary temperatures. Plant operations are limited to a maximum T_{hot} of 618.4 °F, a minimum T_{cold} of 538.2 °F, and a minimum steam pressure of 827 psia.

***Total flow through the reactor core is more restrictive than the sum of all loop mechanical design flows due to core lift considerations.

+Based on an Average RCS temperature of 588.0°F at 0% SGTP.

TABLE 5.1-1a

RCS COMPONENT VOLUME DATA (ft^3)

RCS Component	COLD Unit 1	COLD Unit 2	HOT* Unit 1	HOT* Unit 2
Reactor Vessel	4768	4768	4844	4844
Steam Generator (Total volume)	1252	937	1269	952
Steam Generator (Tubes only)	950	630	966	640
Pressurizer w/ Surge Line	1866	1866	1896	1896

*Hot volumes are calculated from cold volumes by applying an expansion factor of 1.6% (Reference WCAP-10326-A), except for the Unit 1 Steam Generator (Reference B&W Document 22-7720-A13)

5.2 INTEGRITY OF REACTOR COOLANT PRESSURE BOUNDARY

In accordance with NRC Standard Format and Content of Safety Analysis Reports for Nuclear Power Plants (Revision 2), September 1975, this section of the UFSAR presents a discussion of the measures employed to provide and maintain the integrity of the reactor coolant pressure boundary (RCPB) for the plant design lifetime. In this context, the RCPB is as defined in Section 50.2 of 10 CFR 50. In that definition, the RCPB extends and includes the outermost containment isolation valve in system piping which penetrates the containment and is connected to the reactor coolant system (RCS). Since other sections of this UFSAR already describe the components of these auxiliary fluid systems in detail, the discussions in this section will be limited to the components of the RCS as defined in Section 5.1, unless otherwise noted.

For additional information on the RCS and for components which are part of the RCPB (as defined in 10 CFR 50) but are not described in this section, refer to the following sections and subsections:

a. Section 6.3 - For discussions of the RCPB components which are part of the emergency core cooling system.

b. Subsection 9.3.4 - For discussions of the RCPB components which are part of the chemical and volume control system.

c. Subsection 3.9.1 - For discussions of the design loadings, stress limits, and analyses applied to the RCS and ASME Code Class 1 components.

d. Subsection 3.9.3 - For discussions of the design loadings, stress limits, and analyses applied to ASME Code Class 2 and 3 components.

The term, RCS, as used in this section is as described in Section 5.1. When the term RCPB is used in this section, its definition is that of Section 50.2 of 10 CFR 50.

5.2.1 Compliance with Codes and Code Cases

5.2.1.1 Compliance with 10 CFR 50.55a

RCS components are designed and fabricated in accordance with the rules of 10 CFR 50, Section 50.55a, "Codes and Standards," except for the Byron Station Units 1 and 2 Category I control valves which are designed and fabricated to ASME Section III, 1971 Edition through Summer 1972 Addenda.

The exception for the Byron Station Units 1 and 2 control valves results from issue of the construction permit (CP) being

delayed beyond the originally anticipated CP date. The purchase order for the control valves was placed in advance of the CP due to the length of component design and manufacturing lead time. Updating these valves to a later ASME Code Addenda would require additional cost and administrative burden without a compensating increase in the level of quality or safety. The actual hardware configuration would not be changed by upgrading to a later ASME Code. Thus, the control valves, although not in strict accordance with 10 CFR 50.55a, are acceptable as built to ASME III 1971 Edition through Summer 1972 Addenda.

Components within the reactor coolant pressure boundary (RCPB), as defined in 10 CFR 50.2, are classified as Safety Class 1 except those components exempted by 10 CFR 50.55a. The exempted components, in most cases, are classified as Safety Class 2. In some cases, appropriate safety class interfaces permit the classification of exempted components within the RCPB as defined in 10 CFR 50.2 to be less than Safety Class 2; for example, the SIS (accumulator) test line includes non-nuclear safety piping. In all cases, the equipment classification are in compliance with 10 CFR 50.55a. The respective industry codes used in the construction of equipment of various safety classification are identified in Table 3.2-2.

Westinghouse utilizes safety class terminology, as defined in ANSI N18.2a-1975, for classification of components rather than the Regulatory Guide 1.26 recommendations for quality group classification. In addition, ANSI N18.2a in conjunction with ANS Nuclear Power Plant Standard Committee Policy 2.3 (Draft 6), provides greater detail than Regulatory Guide 1.26 in the area of safety class interface criteria and is used to define safety class interfaces.

The actual addenda of the ASME Code applied in the final assembly of each component is listed in Table 5.2-1.

5.2.1.2 Applicable Code Cases

Table 5.2-1a lists the ASME Code Cases used in the manufacture of Class 1 components. Code Case 1528 was used in the manufacture of the Byron and Braidwood pressurizers and the Byron Unit 2 steam generators. Westinghouse has conducted a test program to determine the fracture toughness of low alloy ferritic materials with specified minimum yield strengths greater than 50,000 psi to demonstrate compliance with Appendix G of the ASME Code, Section III. In this program, fracture toughness properties were determined and shown to be adequate for base metal plates and forgings, weld metal, and heat affected zone metal for higher strength ferritic materials used for components of the RCPB. The results of the program are documented in Reference 7.

5.2.2 Overpressurization Protection

RCS overpressure protection is accomplished by the utilization of safety valves along with the reactor protection system and associated equipment. Combinations of these systems provide compliance with the overpressure requirements of the ASME Boiler and Pressure Vessel Code Section III, Paragraph NB-7300 and NC-7300, for pressurized water reactor systems.

Auxiliary or emergency systems connected to the reactor coolant system (RCS) are not utilized for prevention of RCS overpressurization.

5.2.2.1 Design Bases

Overpressure protection is provided for the RCS by the pressurizer safety valves which discharge to the pressurizer relief tank by a common header. The design-basis transient for the primary system overpressure protection equipment is a complete loss of steam flow to the turbine with credit taken for steam generator safety valve operation. However, for the sizing of the pressurizer safety valves, no credit is taken for reactor trip, main feedwater, or for the operation of the following:

a. pressurizer power-operated relief valves,

b. steamline power-operated relief valves,

c. steam dump system,

d. reactor control system,

e. pressurizer level control system, and

f. pressurizer spray valve.

For this transient, the peak RCS and peak steam system pressure must be limited to 110% of their respective design values.

Assumptions for the design basis overpressure analysis are described in detail in the "Overpressure Protection Report for Byron/Braidwood Nuclear Power Units 1 & 2," Reference 8.

Overpressure protection for the steam system is provided by steam generator safety valves. The steam system safety valve capacity is based on providing enough relief to limit the maximum steam system pressure to less than 110% of the steam generator shell side design pressure.

Postulated events and transients on which the design requirements of the overpressure protection system are based are discussed in Reference 1.

Blowdown and heat dissipation systems of the NSSS connected to the discharge of these pressure relieving devices are discussed in Subsection 5.4.11. Overpressure protection systems for the balance of plant are discussed in Section 10.3.

5.2.2.2 Design Evaluation

The relief capacities of the pressurizer and steam generator safety valves are determined from the postulated overpressure transient conditions in conjunction with the action of the reactor protection system. A typical evaluation of the functional design of the system and an analysis of the capability of the system to perform its function are presented in Reference 1. The report describes in detail the types and number of pressure relief devices employed, relief device description, locations in the systems, reliability history, and the details of the methods used for relief device sizing based on typical worst case transient conditions and analysis data for each transient condition. The description of the analytical model used in the analysis of the overpressure protection system and the basis for its validity are discussed in Reference 2.

The initial conditions assumed in the overpressure report (Reference 8) include,

The initial reactor power and RCS temperatures are assumed to be at their maximum values consistent with the steady state full power operation including allowances for calibration and instrument errors.

The initial RCS pressure is assumed at a minimum value consistent with the steady state full power operation including allowances for calibration and instrument errors. This results in the maximum possible increase in coolant and main steam pressures for the loss of load/turbine trip event (worst case pressurization transient).

Additional assumptions, parameters, and equipment and systems assumed to operate in a loss of load/turbine trip event are provided in Section 15.2.3.

In the overpressure protection report no credit was taken for reactor trip on turbine trip. Reactor was tripped on high pressurizer pressure (2471 psia). Results show that adequate overpressurization protection is provided by the three installed safety valves.

Preoperational testing which verifies the accuracy of instrumentation systems used to initiate overpressure protection is discussed in Chapter 14.0.

A description of the pressurizer safety valves performance characteristics along with the design description of the incidents, assumptions made, method of analysis, and conclusions are discussed in Chapter 15.0.

Changes to relief valve setpoints due to temperature variations have been considered. Temperature changes affect the spring rate of the valve spring, reducing the setpoint as the temperature increases. Normal ambient air temperature variations do not significantly affect the setpoint. However, when a cold valve relieves hot fluid the setpoint can be reduced. This effect has been considered in the design of the valves and fluid systems.

5.2.2.3 Piping and Instrumentation Diagrams

Overpressure protection for the reactor coolant system is provided by pressurizer safety valves as shown diagrammatically in Drawings M-60 and M-135. These discharge to the pressurizer relief tank by common header. The steam system safety valves piping arrangement is shown diagrammatically in Drawing M-35.

5.2.2.4 Equipment and Component Description

The operation, significant design parameters, number and types of operating cycles, and environmental qualification of the pressurizer safety valves are discussed in Subsection 5.4.13. A discussion of the equipment and components of the steam system overpressure system is presented in Section 10.3.

5.2.2.5 Mounting of Pressure-Relief Devices

Sargent & Lundy determined the layout of the Pressurizer Safety and Relief Valve (PSARV) system. Westinghouse is responsible for the analysis of the PSARV system and the design and analysis of the supports for the PSARV system. These analyses assure that the piping reaction loads on the valves are within acceptable values, as specified by the valve vendor.

Subsection 3.9.3.3 discusses steam relief conditions including water slug effects. Water relief resulting from protection against the cold overpressure condition during cooldown has been considered in the support analysis (the water hammer condition is not applicable). The water relief rates used in the loading analysis are calculated for each transient case using the valve discharge coefficient which is obtained directly from the valve drawings provided by the vendor.

5.2.2.5.1 Design and Installation Details

5.2.2.5.1.1 Pressurizer Safety Valves and Power-Operated Relief Valves

The pressurizer safety valves and power-operated relief valves are installed immediately adjacent to the pressurizer within its enclosure. The safety valves are installed at elevation 453 feet. The power-operated relief valves are installed at elevations 457 and 462.

5.2.2.5.1.2 Main Steam Safety Valves and Power-Operated Relief Valves

The main steam safety valves and power-operated relief valves are installed in a Category I valve room immediately outside the containment, at an elevation of approximately elevation 407 feet.

5.2.2.5.2 Design Bases for Assumed Loads

The design bases for the assumed loads takes into account the following:

a. blowdown forces from all valves of the same type blowing simultaneously and from individual valves blowing down;

b. weights of valves and their connecting piping;

c. thermal expansion of the pipe and valves during blowdown;

d. seismic loads concurrent with the above; and

e. the use of restraints, if required, to maintain stresses within allowable values for the valves and connecting piping.

5.2.2.5.3 Maximum Stress

The maximum stress due to a combination of the above loads is as follows in the safety and relief valve piping:

	Branch (psi)	Run (psi)
Pressurizer Safety Valve	26,474	25,544
Pressurizer Power-Operated Relief Valve	42,369	13,152
Main Steam Safety Valve	16,173	5,631
Main Steam Power-Operated Relief Valve	22,995	14,345

Each main steam power operated relief valve exhaust pipe is vertically restrained, which neutralize the down thrust resulting from blowdown. A snubber (restraint) has been provided for the discharge line of each pressurized safety valve. One has also been provided for each pressurizer power-operated relief valve.

The previous listed stresses are preliminary and may differ from the values which are indicated in the certified stress reports.

Mounting of the components to protect the steam system from overpressure is discussed in Subsection 3.9.3.

5.2.2.6 Applicable Codes and Classifications

The requirements of ASME Boiler and Pressure Vessel Code, Section III, NB-7300 (Overpressure Protection Report) and NC-7300 (Overpressure Protection Analysis), are followed and complied with for pressurized water reactor systems. Overpressurization protection is provided which maintains the pressure of the primary system loop within its allowable pressure at a given temperature.

Piping, valves, and associated equipment used for overpressure protection are classified in accordance with ANSI-N18.2,

Nuclear Safety Criteria for the Design of Stationary Pressurized Water Reactor Plants. These safety category designations are delineated in Table 3.2-1.

For further information, refer to Section 3.9.

5.2.2.7 Material Specifications

Refer to Subsection 5.2.3 for a description of this topic.

5.2.2.8 Process Instrumentation

Each pressurizer safety valve discharge line incorporates a control board temperature indicator and alarm to notify the operator of steam discharge due to either leakage or actual valve operation. For a further discussion on process instrumentation associated with the system, refer to Subsection 7.2.2.

5.2.2.9 System Reliability

The reliability of the pressure relieving devices is discussed in Section 4 of Reference 1.

5.2.2.10 Testing and Inspection

Testing and inspection of the overpressure protection components are discussed in Subsection 5.4.13.4 and Section 3.9, respectively.

5.2.2.11 RCS Pressure Control During Low Temperature Operation

Procedures are developed to aid the operator in controlling RCS pressure during low temperature operation. However, to provide a backup to the operator and to minimize the frequency of RCS overpressurization, an automatic relief system is provided to maintain pressures within allowable limits.

During periods of water solid operation, pressurizer power-operated relief valves (PORVs) are used to provide protection against exceeding 10 CFR 50 Appendix G limits. In addition, Byron Units 1 and 2, and Braidwood Units 1 and 2, have received exemptions from the NRC to permit the optional use of the methodology documented in American Society of Mechanical Engineers (ASME) Code Case N-514 in the generation of PORV lift setpoints. ASME Code Case N-514 allows for a 10% relaxation in the Appendix G curves for determining PORV lift setpoints. These limits are shown in the curves presented in Pressure Temperature Limit Report (PTLR) Figure 3.1 and Table 3.1 for each unit, respectively. Analyses have shown that one PORV is sufficient to prevent exceeding these limits due to anticipated mass and heat input transients. However, redundant

protection against such overpressurization events are provided through use of two PORVs to mitigate any potential pressure transients. The PORV settings are staggered to minimize the potential that both PORVs respond simultaneously. The protection system is required only during low temperature operation with the RCS in an unvented condition. It is manually armed and automatically actuated.

5.2.2.11.1 System Operation

The pressurizer power-operated relief valves are both supplied with actuation logic to ensure that an automatic and independent RCS pressure control backup feature is provided for the operator during low temperature operations.

This system provides the capability for additional RCS inventory letdown, thereby maintaining RCS pressure within allowable limits. Refer to Subsections 5.4.7, 5.4.10, 5.4.13, 7.6.9, and 9.3.4 for additional information on RCS pressure and inventory control during other modes of operation.

The basic function of the system logic is to continuously monitor RCS temperature and pressure conditions whenever plant operation is at low temperatures (~350°F). An auctioneered system temperature is continuously converted to an allowable pressure and then compared to the actual RCS pressure. The system logic first annunciates a main board alarm whenever the measured pressure approaches within a predetermined amount, thereby indicating a pressure transient is occurring. On a further increase in measured pressure, an actuation signal to the power operated relief valves prevents pressure-temperature conditions from exceeding allowable limits.

5.2.2.11.2 Evaluation of Low Temperature Overpressure Transients

Pressure Transient Analyses

Section III, Appendix G of the ASME Code, establishes guidelines and limits for RCS pressure primarily for low temperature conditions (≤350°F). The relief system discussed in Subsection 5.2.2.11.1 satisfies these conditions as discussed in the following paragraphs.

Transient analyses were performed to determine the maximum pressure for the postulated mass input and heat input events.

The mass input transient analysis was performed assuming the inadvertent actuation of one charging pump, which, in combination with letdown isolation, pressurizes the RCS.

The heat input analysis was performed for an incorrect reactor coolant pump start assuming that the RCS was water solid at the initiation of the event and that a 50°F mismatch existed between the RCS (250°F) and the secondary side of the steam generators (300°F). The results of the mass input transient analysis and the heat input analysis are combined to create composite maximum allowable PORV setpoint curves for Unit 1 and Unit 2 (PTLR Figure 3.1 and Table 3.1 for each unit, respectively). The

mass input transient governs at lower temperatures of the analyzed temperature range, and the heat input transient governs at higher temperatures.

Both analyses took into account the single failure criteria, and therefore, only the operation of one power-operated relief valve (PORV) was assumed to be available for pressure relief. The above events have been evaluated against the allowable Appendix G pressure/temperature limits. The evaluations of the transient results conclude that the allowable limits will not be exceeded, and therefore, the transients will not constitute an impairment to vessel integrity and plant safety.

OBE Evaluation

A fluid system evaluation has been performed to analyze the potential for overpressure transients following an OBE. The basis of the evaluation assumes the plant air system is inoperable since it is not seismically qualified. The results of the evaluation follow and demonstrate that overpressure transients following an OBE are not a concern. However, the pressurizer PORVs are equipped with backup instrument air accumulators that are seismically qualified. The PORVs and operators remain structurally sound and capable of performing their intended functions. As a minimum no loss of function implies that pressure boundary joints will not leak; yokes, frames and similar structures will not break; motors and actuators will not freeze or bind and the structural integrity of valve internals will not be degraded. Therefore, overpressure transients following an OBE are not a concern.

For the various modes described above, the pressurizer safety and RHRS relief valves provide pressure relief for the postulated transients following an OBE and thus maintain the primary system within the allowable pressure/temperature limits.

Direct Current Bus Failure Analysis

With the plant in a cooled down and depressurized condition in which the cold overpressure protection system is required to be operable, and with charging and letdown established, a d-c vital bus fails. This failure causes normal letdown to isolate and also results in the loss of one of two power-operated relief valves (PORV) due to loss of d-c power to the solenoid valve which directs air away from the valve diaphragm failing the valve closed.

In addition to the d-c bus failure, an additional random failure of the second PORV is postulated to occur. This sequence of events places the plant in a condition in which letdown is isolated, the automatic cold overpressure protection system is inoperable and charging flow is filling the pressurizer increasing system pressure towards the Appendix G limits.

To begin this discussion, the limitations placed on plant operation by the Technical Specifications will be addressed.

1. With reactor coolant system (RCS) temperature below 200°F, i.e., cold shutdown, one residual heat removal (RHR) pump is required to be in operation. This requirement ensures that at least one RHR suction relief valve is available for overpressure protection of the RCS. This valve is sized to relieve the capacity of one charging pump at the valve lift setting pressure.

2. Whenever the RCS is in a condition in which the cold overpressure protection system is required to be operable, all but one charging pump is required to be made incapable of operation. This requirement assures that only one charging pump would be operating at the initiation of the event. Considering these requirements, any time RHR is in operation and the RCS is in a condition requiring the cold overpressure protection to be operable, there will be no overpressure event as a result of the prescribed scenario. Assuming the event as described did occur, the RHR relief valve would prevent RCS pressure from reaching the Appendix G limit by relieving all charging flow. During RHR operation, letdown is typically taken from the discharge of the RHR pumps and would not be isolated by the d-c bus failure.

The RHR system is in operation, or at a minimum, the RHR loop suction valves are open providing an open path from the RCS to the RHR suction relief valves, whenever RCS temperature is below 350°F. (At temperatures above 350°F there is always a bubble in the pressurizer, which is discussed below.) For this reason, an overpressure event resulting from the prescribed scenario is very unlikely, however, the discussion is extended to the case where the RHR system becomes isolated from the RCS and the cold overpressure protection system is required to be operable.

To gain a better understanding of the results of the event, it is necessary to address the functions of some of the chemical and volume control system (CVCS) control valves. As stated earlier, the letdown valves will fail closed on loss of d-c power isolating letdown. The normal charging isolation valve will fail open on loss of d-c power to the solenoid air valve, however, between the charging pump and the normal charging isolation valve are two normally throttled valves which receive their power from the process and control racks powered by the vital a-c instrument buses. These valves then would be

unaffected by a d-c bus failure and would continue to work normally during the event. One of these valves is the charging flow control valve which automatically regulates flow to maintain a prescribed pressurizer level. Assuming this valve continues to function normally, as pressurizer level rises, charging flow would be reduced until the charging flow would be limited to that required for seal injection (32 gpm) plus a minimal amount (15 gpm) required for regenerative HX cooling. At this flow rate, ample time is provided, as discussed below, to allow appropriate operator action. If valve control were in manual, the valve position would remain unchanged. The other valve is the charging flow backpressure regulator which is manually positioned to regulate flow to the seal. This valve would remain in its initial position. The effect of these two valves would be to limit charging flow to its value at the beginning of the event. Assuming letdown flow of 120 gpm at the initiation of the event, total flow (charging plus seal injection) to the RCS would be limited to approximately 120 gpm.

Letdown flow may be increased up to 150 gpm during shutdown operation in Modes 5 and 6 with an RHR pump providing letdown flow to the volume control tank and overpressure protection of the RCS. During letdown booster pump operations the letdown flow may be greater than 150 gpm.

An additional consideration is that with the plant in the hot shutdown condition and RHR isolated from the RCS, normal operation is to have a steam bubble in the pressurizer of approximately 1350 ft^3. At a charging rate of 120 gpm, it would take in excess of 30 minutes to reach the Appendix G limit at 200°F, the temperature corresponding to the coldest RCS temperature at which RHR is permitted to be isolated. As an extreme case, with a bubble of only half the normal size, the corresponding time available for appropriate action would be in excess of 15 minutes.

To summarize the discussion:

1. The postulated event is unlikely to occur since the d-c buses have a battery as an emergency power supply and should the d-c bus fail, it must be coupled with the additional failure of the second PORV for overpressurization.

2. In the unlikely event that the prescribed scenario did occur, RHR would normally be on line and capable of mitigating any potential overpressure resulting from one charging pump.

3. In the highly unlikely event that the scenario should occur when RHR is isolated from the RCS, the operator would have sufficient time to mitigate the event.

4. The Appendix G curves are excessively conservative for their intended purpose of assuring vessel integrity during cold conditions.

Based on the above discussion, no further action is necessary to address this postulated event. Existing plant design and operational techniques result in successful event mitigation.

5.2.2.11.3 Procedures

Although the system described in Subsection 5.2.2.11.1 is installed to maintain RCS pressure within allowable limits, administrative procedures have been implemented for minimizing the potential for any transient that could actuate the overpressure relief system. The following discussion highlights these procedural controls, listed in hierarchy of their function in preventing RCS cold overpressurization transients.

Of primary importance is the basic method of operation of the plant. Normal plant operating procedures maximize the use of a pressurizer cushion (steam/nitrogen bubble) during periods of low pressure and low temperature operation. This cushion dampens the plant response to potential transient generating inputs, providing easier pressure control with the slower response rates.

An adequate cushion eliminates some potential transients such as reactor coolant pump induced heat input and slows the rate or pressure rise for others. In conjunction with the previously discussed alarms, this provides reasonable assurance that most potential transients can be terminated by operator action before the overpressure relief system actuates.

However, for those modes of operation when water solid operation may still be possible, procedures further highlight precautions that minimize the potential for developing an over-pressurization transient. The following specific recommendations have been made:

a. Do not isolate the residual heat removal inlet lines from the reactor coolant loop unless the charging pumps are stopped. This precaution is to assure there is a relief path from the reactor coolant loop to the residual heat removal suction line relief valves when the RCS is at low pressure (less than 500 psi) and is water solid.

b. Whenever the plant is water solid and the reactor coolant pressure is being maintained by the low pressure letdown control valve, letdown flow must bypass the normal letdown orifices, and the valve in the bypass line should be in the full open position. During this mode of operation, all three letdown orifices must also remain open.

c. If all reactor coolant pumps have stopped for more than 5 minutes during plant heatup, and the reactor coolant temperature is greater than the charging

and seal injection water temperature, do not attempt to restart a pump unless a steam or nitrogen bubble is formed in the pressurizer. This precaution minimizes the pressure transient when the pump is started and the cold water previously injected by the charging pumps is circulated through the warmer reactor coolant components. The bubble accommodates the resultant expansion as the cold water is rapidly warmed.

d. If all reactor coolant pumps are stopped and the RCS is being cooled down by the residual heat exchangers, a nonuniform temperature distribution may occur in the reactor coolant loops. Do not attempt to restart a reactor coolant pump unless a steam or nitrogen bubble is in the pressurizer.

e. During plant cooldown, all steam generators should be connected to the steam header to assure a uniform cooldown of the reactor coolant loops.

f. At least one reactor coolant pump must remain in service until the reactor coolant temperature is reduced to 160°F.

These special precautions backup the normal operational mode of maximizing periods of bubble operation so that cold overpressure transient prevention is continued during periods of transitional operations.

The specific plant configurations of the emergency core cooling system testing and alignment also highlight procedural recommendations to prevent developing cold overpressurization transients. During these limited periods of plant operation, the following recommendations have been made:

a. To preclude inadvertent emergency core cooling system actuation during cooldown, procedures require blocking the low pressurizer pressure and low steamline pressure safety injection signal actuation logic at less than 1930 psig. This action enables the high steam pressure negative rate steamline isolation logic.

b. During further cooldown, closure and power lockout of the accumulator isolation valves will be performed with the reactor coolant pressure between 1000 psig and 800 psig. Power lockout of the safety injection pumps and the nonoperating charging pump(s) will be performed at RCS temperature below 350°F and will be completed prior to RCS temperature reaching 330°F. These actions provide additional backup to step a above.

An exception is made in the case of power lockout to the safety injection pumps in that at least one safety injection pump must be available under certain circumstances to mitigate the consequences of a loss of decay heat removal event during reduced inventory conditions, i.e., in Modes 5 and 6 with the pressurizer level less than or equal to 5% and the hot side of the RCS not adequately vented. Cold overpressurization is not a concern in this case because sufficient air volume exists in the pressurizer which allows the operator time to react.

In addition, operational procedures ensure that no single inadvertent action by plant operators could result in one or more SI pumps injecting into the RCS.

c. The recommended procedure for periodic emergency core cooling system pump performance testing is to test the pumps during normal power operation

or at hot shutdown conditions. This precludes any potential for developing a cold overpressurization transient.

Should cold shutdown testing of the pumps be desired, it is recommended that the test be done when the vessel is open to atmosphere again precluding overpressurization potential.

If cold shutdown testing with the vessel closed is necessary, the procedures require safety injection system (SIS) pump and charging pump discharge valve closure and RHRS alignment to both isolate potential emergency core cooling system pump input and to provide backup benefit of the RHRS relief valves.

d. "S" signal circuitry testing, if done during cold shutdown, also requires RHRS alignment and nonoperating charging pump and SIS pump power lockout to preclude developing cold overpressurization transients.

The previous procedural recommendations covering normal operations with a steam bubble, transitional operations where potentially water solid, followed by specific testing operations provide in-depth cold overpressure preventions, augmenting the installed overpressure relief system.

5.2.3 Reactor Coolant Pressure Boundary Materials

5.2.3.1 Material Specifications

Material specifications used for the principal pressure retaining applications in each component comprising the reactor coolant pressure boundary (RCPB) are listed in Table 5.2-2 for ASME Class 1 primary components and Table 5.2-3 for ASME Class 1 and 2 auxiliary components. Tables 5.2-2 and 5.2-3 also include the unstabilized austenitic stainless steel material specifications used for components in systems required for reactor shutdown and for emergency core cooling. The unstabilized austenitic stainless steel material for the reactor vessel internals which are required for emergency core cooling for any mode of normal operation or under postulated accident conditions and for core structural load bearing members are listed in Table 5.2-4.

All of the materials utilized conform with the requirements of the ASME Boiler and Pressure Vessel Code, Section III, plus Addenda and Code Cases as are applicable and appropriate to meet Appendix B of 10 CFR 50 in the Federal Register, Vol. 35, No. 125.

In some cases, Table 5.2-3 may not be totally inclusive of the material specifications used in the listed applications. However, the listed specifications are typical and representative of those materials utilized.

The welding materials used for joining the ferritic base materials of the RCPB, conform to or are equivalent to ASME welding rod Material Specifications SFA 5.1, 5.23, 5.5, 5.17, 5.18, and 5.20. They are tested and qualified to the requirements of ASME Section III. In addition the ferritic materials of the reactor vessel beltline are restricted to the following maximum limits of copper, phosphorous, and vanadium to reduce sensitivity to irradiation embrittlement in service:

Element	Base Metal(%)	As Deposited Weld Metal(%)
Copper	0.10 (Ladle) 0.12 (Check)	0.10
Phosphorous	0.012 (Ladle) 0.017 (Check)	0.015
Vanadium	0.05 (Check)	0.05 (as residual)

The welding materials used for joining the austenitic stainless steel base materials of the RCPB conform to ASME Material Specifications SFA 5.4 and 5.9. They are tested and qualified according to the requirements of ASME Section III.

The welding materials used for joining nickel-chromium-iron alloy in similar base material combination and in dissimilar ferritic or austenitic base material combination conform to ASME Material specifications SFA 5.11 and 5.14 and UNS-N006052 (Unit 1 only). They are tested and qualified to the requirements of ASME Section III.

5.2.3.2 Compatibility With Reactor Coolant

5.2.3.2.1 Chemistry of Reactor Coolant

The reactor coolant system (RCS) chemistry specifications are given in Technical Requirements Manual (TRM) 3.4.b.

The RCS water chemistry is selected to minimize corrosion. A routinely scheduled analysis of the coolant chemical composition is performed to verify that the reactor coolant chemistry meets the specifications.

The chemical and volume control system provides a means for adding chemicals to the RCS which control the pH of the coolant during prestartup testing and subsequent operation, scavenge oxygen from the coolant during heatup, establish a zinc concentration that forms on austenitic alloys and limits mass transfer across the films and thereby limits corrosion and control radiolysis

reactions involving hydrogen, oxygen, and nitrogen during all power operations subsequent to startup. The limits specified for chemical additives and reactor coolant impurities for power operation are shown in TRM 3.4.b.

The pH control chemical specified is lithium hydroxide monohydrate, enriched in lithium-7 isotope to 99.9%. This chemical is chosen for its compatibility with the materials and water chemistry of borated water/stainless steel/zirconium/inconel systems. In addition, lithium-7 is produced in solution from the neutron irradiation of the dissolved boron in the coolant. The lithium-7 hydroxide is introduced into the RCS via the charging flow. The solution is prepared in the laboratory and transferred to the chemical additive tank. Reactor makeup water is then used to flush the solution to the suction header of the charging pumps. The concentration of lithium-7 hydroxide in the RCS is maintained in the range specified for pH control. If the concentration exceeds this range, the cation bed demineralizer is employed in the letdown line in series operation with the mixed bed demineralizer.

During initial reactor startup from the cold shutdown condition, hydrazine and/or hydrogen is employed as an oxygen scavenging agent. The hydrazine solution is introduced into the RCS in the same manner as described above for the pH control agent. Following initial power operation, hydrogen may be used in place of or in conjunction with hydrazine for oxygen scavenging during startup from the cold shutdown condition. Hydrogen is introduced into the RCS in the same manner as described below.

The reactor coolant is treated with dissolved hydrogen to control the net decomposition of water by radiolysis in the core region. The hydrogen also reacts with oxygen and nitrogen introduced into the RCS as impurities under the impetus of core radiation. Sufficient partial pressure of hydrogen is maintained in the volume control tank such that the specified equilibrium concentration of hydrogen is maintained in the reactor coolant. A pressure control valve maintains minimum pressure in the vapor space of the volume control tank. This can be adjusted to provide the correct equilibrium hydrogen concentration.

Boron, in the chemical form of boric acid, is added to the RCS to accomplish long term reactivity control of the core. The mechanism for the process involves the absorption of neutrons by the boron-10 isotope of naturally occurring boron.

Suspended solids (corrosion product particulates) and other impurity concentrations are maintained below specified limits by controlling the chemical quality of makeup water and chemical additives and by purification of the reactor coolant through the CVCS mixed bed demineralizer.

Zinc acetate solution is introduced into the RCS during power operation via charging flow. A target zinc concentration is maintained within the RCS. This very low concentration of zinc provides several benefits: Reduced dose

rates and reduced corrosion rates on primary system surfaces. Zinc causes the development of thinner oxide films and also modifies the structure and morphology of these spinel corrosion films, leading to the preferential release of nickel and cobalt by the substitution of zinc for these elements in the spinel lattice. It is this modification of the oxide corrosion films that develop on primary system materials that lowers corrosion rates. The release of nickel and cobalt from primary system materials and their suspension in the reactor coolant will allow removal by the CV mixed bed demineralizers, resulting in reduced RCS dose levels.

5.2.3.2.2 Compatibility of Construction Materials With Reactor Coolant

All of the ferritic low alloy and carbon steels which are used in principal pressure retaining applications are provided with corrosion resistant cladding on all surfaces that are exposed to the reactor coolant. This cladding material has a chemical analysis which is at least equivalent to the corrosion resistance of Types 304 and 316 austenitic stainless steel alloys or nickel-chromium-iron alloy, martensitic stainless steel and precipitation hardened stainless steel. The cladding on ferritic type base materials receives a post weld heat treatment, as required by the ASME Code.

Ferritic low alloy and carbon steel nozzles are safe ended with either Inconel 690, stainless steel wrought materials, stainless steel weld metal analysis A-7 (designated A-8 in the 1974 Edition of the ASME Code), or nickel-chromium iron alloy weld metal F-Number 43. The latter buttering material requires further safe ending with austenitic stainless steel base material after completion of the post-weld heat treatment when the nozzle is larger than a 4-inch nominal inside diameter and/or the wall thickness is greater than 0.531 inch.

All of the austenitic stainless steel and nickel-chromium-iron alloy base materials with primary pressure retaining applications are used in the solution annealed heat treated condition. These heat treatments are as required by the material specifications.

During subsequent fabrication, these materials are not heated above 800°F other than locally by welding operations. The solution annealed surge line material is subsequently formed by hot bending followed by a resolution annealing heat treatment.

Components with stainless steel sensitized in the manner expected during component fabrication and installation will operate satisfactorily under normal plant chemistry conditions in PWR systems because chlorides, fluorides, and oxygen are controlled to very low levels.

5.2.3.2.3 Compatibility With External Insulation and Environmental Atmosphere

In general, all of the materials listed in Tables 5.2-2 and 5.2-3 which are used in principal pressure retaining applications and which are subject to elevated temperature during system operation are in contact with thermal insulation that covers their outer surfaces.

The thermal insulation used on the reactor coolant pressure boundary is the reflective stainless steel type. Appendix A includes a discussion which indicates the degree of conformance

with criteria for nonmetallic thermal insulation for austenitic stainless steel.

In the event of coolant leakage, the ferritic materials will show increased general corrosion rates. Where minor leakage is anticipated from service experience, such as valve packing, pump seals, etc., only materials which are compatible with the coolant are used. Typical materials are as shown in Tables 5.2-2 and 5.2-3. Ferritic materials exposed to coolant leakage can be readily observed as part of the inservice visual and/or nondestructive inspection program to assure the integrity of the component for subsequent service.

5.2.3.3 Fabrication and Processing of Ferritic Materials

5.2.3.3.1 Fracture Toughness

The fracture toughness properties of the RCPB components meet the requirements of ASME Section III paragraph NB, NC and ND-2300 as appropriate.

Limiting steam generator and pressurizer RT_{NDT} temperatures are guaranteed at 0 °F for Unit 1 and 60 °F for Unit 2 for the base materials and the weldments. These materials will meet the 50 ft-lbs absorbed energy and 35 mils lateral expansion requirements of the ASME code section III at 60 °F for Unit 1 and 120 °F for Unit 2. The actual results of these tests are provided in the ASME material data reports which are supplied for each component and submitted to the owner at the time of shipment of the component.

Calibration of temperature instruments and Charpy impact test machines are performed to meet the requirements of the ASME Code Section III, paragraph NB-2360.

Westinghouse has conducted a test program to determine the fracture toughness of low alloy ferritic materials to demonstrate compliance with Appendix G of the ASME Code, Section III. In this program, fracture toughness properties were determined and shown to be adequate for base metal plates and forgings, weld metal, and heat affected zone metal for higher strength ferritic materials used for components of the reactor coolant pressure boundary. These fracture toughness data are documented in Reference 7 and have been submitted to the NRC for review (via letter NS-CF-1730 dated March 17, 1978, to Mr. J. F. Stoltz, NRC Office of Nuclear Reactor Regulation, from Mr. C. Eicheldinger, Westinghouse PWRSD Nuclear Safety).

5.2.3.3.2 Control of Welding

All welding is conducted utilizing procedures qualified according to the rules of Sections III and IX of the ASME Code. Control of welding variables, as well as examination and testing, during procedure qualification and production welding is performed in accordance with ASME Code requirements.

Appendix A indicates the degree of conformance of the ferritic materials components of the reactor coolant pressure boundary with guidelines for control of electroslag properties, control of preheat temperature for welding of low-alloy steel, and welder qualification for areas of limited accessibility.

In regard to control of stainless steel weld cladding of low-alloy steel components, qualification of any high heat input process, such as the submerged-arc mid-strip welding process and the submerged-arc-6-wire process used on SA-508 Class 2 materials, with a performance test, is required according to accepted guidelines.

5.2.3.4 Fabrication and Processing of Austenitic Stainless Steel

Subsections 5.2.3.4.1 and 5.2.3.4.5 address guidelines for control of the use of sensitized stainless steel, and present the methods and controls utilized by Westinghouse to avoid sensitization and prevent intergranular attack of austenitic stainless steel components. Also, Appendix A also includes a discussion which indicates the degree of conformance with these guidelines.

The conclusions of Westinghouse Topical Report WCAP-9292 are applicable to Byron/Braidwood SA-533 Grade A, Class 2 steel where the subject materials are utilized for primary component pressure boundary material.

5.2.3.4.1 Cleaning and Contamination Protection Procedures

It is required that all austenitic stainless steel materials used in the fabrication, installation and testing of nuclear steam supply components and systems be handled, protected, stored, and cleaned according to recognized and accepted methods which are designed to minimize contamination which could lead to stress corrosion cracking. The rules covering these controls are stipulated in the Westinghouse Electric Corporation process specifications. As applicable, these process specifications supplement the equipment specifications and purchase order requirements of every individual austenitic stainless steel component or system which Westinghouse procures for the Byron/ Braidwood Nuclear Steam Supply System (NSSS), regardless of the ASME Code Classification. They are also given to the architect (S&L) and to the owner of the power plant for use within their scope of supply and activity.

The process specifications which define these requirements and which follow the guidance of the American National Standards Institute N-45 Committee specifications are as follows:

Process Specification Number

8256OHM - Requirements for Pressure Sensitive Tapes for use on Austenitic Stainless Steels

83336KA - Requirements for Thermal Insulation Used on Austenitic Stainless Steel Piping and Equipment

83860LA - Requirements for Marking of Reactor Plant Components and Piping

84350HA - Site Receiving Inspection and Storage Requirements for Systems, Material and Equipment

84351NL - Determination of Surface Chloride and Fluoride on Austenitic Stainless Steel Materials

85310QA - Packaging and Preparing Nuclear Components for Shipment and Storage

292722 - Cleaning and Packaging Requirements of Equipment for Use in the NSSS

597756 - Pressurized Water Reactor Auxiliary Tanks Cleaning Procedures

597760 - Cleanliness Requirements During Storage Construction, Erection and Start-Up Activities of Nuclear Power System

Appendix A includes a discussion which indicates the degree of conformance of the austenitic stainless steel components of the reactor coolant pressure boundary with quality assurance requirements for cleaning of fluid systems and associated components of water-cooled nuclear power plants.

5.2.3.4.2 Solution Heat Treatment Requirements

The austenitic stainless steels listed in Tables 5.2-2, 5.2-3, and 5.2-4 are utilized in the final heat treated condition required by the respective ASME Code Section II materials specification for the particular type or grade of alloy.

5.2.3.4.3 Material Inspection Program

The Westinghouse practice is that austenitic stainless steel materials of product forms with simple shapes need not be corrosion tested provided that the solution heat treatment is followed by water quenching. Simple shapes are defined as all plates, sheets, bars, pipe, and tubes, as well as forgings, fittings, and other shaped products which do not have inaccesible cavities or chambers that would preclude rapid cooling when water quenched. When testing is required, the tests are

performed in accordance with ASTM A 262-70, Practices A or E, as amended by Westinghouse Process Specification 84201 MW, "Corrosion Testing of Wrought Austenitic Stainless Steel Alloy."

5.2.3.4.4 Prevention of Intergranular Attack of Unstabilized Austenitic Stainless Steels

Unstabilized austenitic stainless steels are subject to intergranular attack (IGA) provided that three conditions are present simultaneously. These are:

a. an aggressive environment, e.g., an acidic aqueous medium containing chlorides or oxygen;

b. a sensitized steel; and

c. a high temperature.

If any one of the three conditions described previously is not present, intergranular attack will not occur. Since high temperatures cannot be avoided in all components in the NSSS, Westinghouse relies on the elimination of conditions a and b to prevent intergranular attack on wrought stainless steel components.

The water chemistry in the reactor coolant system of a Westinghouse pressurized water reactor (PWR) is controlled to prevent the intrusion of aggressive species. In particular, the maximum permissible oxygen and chloride concentrations are specified in TRM 3.4.b. Reference 3 describes the precautions taken to prevent the intrusion of chlorides into the system during fabrication, shipping, and storage. The use of hydrogen over pressure precludes the presence of oxygen during operation. The effectiveness of these controls has been demonstrated by both laboratory tests and operating experience. The long time exposure of severely sensitized stainless in early plants to PWR coolant environments has not resulted in any sign of intergranular attack. Reference 3 describes the laboratory experimental findings and the Westinghouse operating experience. The additional years of operations since the issuing of Reference 3 have provided further confirmation of the earlier conclusions. Severely sensitized stainless steels do not undergo any intergranular attack in Westinghouse PWR coolant environments.

In spite of the fact there never has been any evidence that PWR coolant water attacks sensitized stainless steels, Westinghouse considers it good metallurgical practice to avoid the use of sensitized stainless steels in the NSSS components. Accordingly measures are taken to prohibit the purchase of sensitized stainless steels and to prevent sensitization during component fabrication. Wrought austenitic stainless steel stock used for components that are part of (1) the reactor coolant pressure boundary, (2) systems required for reactor shutdown, (3)

systems required for emergency core cooling, and (4) reactor vessel internals that are relied upon to permit adequate core cooling for normal operation or under postulated accident conditions is utilized in one of the following conditions:

a. solution annealed and water quenched, or

b. solution annealed and cooled through the sensitization temperature range within less than approximately 5 minutes.

It is generally accepted that these practices will prevent sensitization. Westinghouse has verified this by performing corrosion tests (ASTM 393) on as-received wrought material.

Westinghouse recognizes that the heat affected zones of welded components must, of necessity, be heated into the sensitization temperature range, 800°F to 1500°F. However, severe sensitization, i.e., continuous grain boundary precipitates of chromium carbide, with adjacent chromium depletion, can still be avoided by control of welding parameters and welding processes. The heat input (Note: Heat input is calculated according to the formula:

$$H = \frac{60\ EI}{S}$$

where: H = joules/in.,

E = volts,

I = Amperes, and

S = Travel Speed in in./min)

and associated cooling rate through the carbide precipitation range are of primary importance. Westinghouse has demonstrated this by corrosion testing a number of weldments.

Of the 25 production and qualification elements tested, representing all major welding processes, and a variety of components, and incorporating base metal thicknesses from 0.10 to 4.0 inches, only portions of 2 were severely sensitized. Of these, one involved a heat input of 120,000 joules, and other involved a heavy socket weld in relatively thin walled material. In both cases, sensitization was caused primarily by high heat inputs relative to the section thickness. However, in only the socket weld did the sensitized condition exist at the surface, where the material is exposed to the environment. The component has been redesigned and a material change has been made to eliminate this condition.

Westinghouse controls the heat input in all austenitic pressure boundary weldments by:

a. prohibiting the use of block welding,

b. limiting the maximum interpass temperature to 350°F, and

c. exercising approval rights on all welding procedures.

To further assure that these controls are effective in preventing sensitization, Westinghouse can conduct additional intergranular corrosion tests of qualification mock-ups of primary pressure boundary and core internal component welds, including the following:

a. reactor vessel safe ends,

b. pressurizer safe ends,

c. surge line and reactor coolant pump nozzles,

d. control rod drive mechanisms head adaptors,

e. control rod drive mechanisms seal welds,

f. control rod extensions, and

g. lower instrumentation penetration tubes.

To summarize, Westinghouse has a four point program designed to prevent intergranular attack of austenitic stainless steel components.

a. Control of primary water chemistry to ensure a benign environment.

b. Utilization of materials in the final heat treated condition and the prohibition of subsequent heat treatments in the 800°F to 1500°F temperature range.

c. Control of welding processes and procedures to avoid HAZ sensitization.

d. Confirmation that the welding procedures used for the manufacture of components in the primary pressure boundary and of reactor internals do not result in the sensitization of heat affected zones.

Both operating experience and laboratory experiments in primary water have conclusively demonstrated that this program is 100% effective in preventing intergranular attack in Westinghouse NSSS's utilizing unstabilized austenitic stainless steel.

5.2.3.4.5 Retesting Unstabilized Austenitic Stainless Steels Exposed to Sensitization Temperatures

It is not normal Westinghouse practice to expose unstabilized austenitic stainless steels to the sensitization range of 800°F to 1500°F during fabrication into components. If, during the course of fabrication, the steel is inadvertently exposed to the sensitization temperature range, 800°F to 1500°F, the material may be tested in accordance with ASME A393 or A262 as amended by Westinghouse Process Specification 84201 MW to verify that it is not susceptible to intergranular attack, except that testing is not required for:

1. cast metal or weld metal with a ferrite content of 5% or more,

2. material with a carbon content of 0.03% or less that is subjected to temperatures in the range of 800°F to 1500°F for less than 1 hour, and

3. material exposed to special processing provided the processing is properly controlled to develop a uniform product and provided that adequate documentation exists of service experience and/or test data to demonstrate that the processing will not result in increased susceptibility to intergranular stress corrosion.

If it is not verified that such material is not susceptible to intergranular attack, the material will be solution annealed and water quenched or rejected.

5.2.3.4.6 Control of Welding

The following paragraphs address criteria for control of stainless steel welding, and present the methods used, and the verification of these methods, for austenitic stainless steel welding.

The welding of austenitic stainless steel is controlled to mitigate the occurrence of microfissuring or hot cracking in the weld. Although published data and experience have not confirmed that fissuring is detrimental to the quality of the weld, it is recognized that such fissuring is undesirable in a general sense. Also, it has been well documented in the technical literature that the presence of delta ferrite is one of the mechanisms for reducing the susceptibility of stainless steel welds to hot cracking. However, there is insufficient data to specify a minimum delta ferrite level below which the material will be prone to hot cracking. It is assumed that such a minimum lies somewhere between 0 and 3% delta ferrite.

The scope of these controls discussed herein encompasses welding processes used to join stainless steel parts in components

designed, fabricated or stamped in accordance with ASME Boiler and Pressure Vessel Code, Section III Class 1, 2, and core support components. Delta ferrite control is appropriate for the above welding requirements except where no filler metal is used or for other reasons such control is not applicable. These exceptions include electron beam welding, autogenous gas shielded tungsten arc welding, explosive welding, and welding using fully austenitic welding materials.

The fabrication and installation specifications require welding procedure and weld qualification in accordance with Section III, and include the delta ferrite determinations for the austenitic stainless steel welding materials that are used for welding qualification testing and for production processing. Specifically, the undiluted weld deposits of the "starting" welding materials are required to contain a minimum of 5% delta ferrite (Note: The equivalent ferrite number may be substituted for percent delta ferrite), as determined by chemical analysis and calculation using the appropriate weld metal constitution diagrams. When new welding procedure qualification tests are evaluated for these applications, including repair welding of raw materials, they are performed in accordance with the requirements of Section III and Section XI.

The results of all the destructive and nondestructive tests are reported in the procedure qualification record in addition to the information required in Section III.

The "starting" welding materials used for fabrication and installation welds of austenitic stainless steel materials and components meet the requirements of Section III. The austenitic stainless steel welding material conforms to ASME weld metal analysis A-7 (designated A-8 in the 1974 Edition of the ASME Code). Types 308, 308L, 316, and 316L were used for all applications. Bare weld filler metal, including consumable inserts, used in inert gas welding processes conform to ASME SFA-5.9, and are procured to contain not less than 5% delta ferrite according to Section III. Weld filler metal materials used in flux shielded welding processes conform to ASME SFA-5.4 or SFA-5.9 and are procured in a wire-flux combination to be capable of providing not less than 5% delta ferrite in the deposit according to Section III. Welding materials are tested using the welding energy inputs to be employed in production welding.

Combinations of approved heat and lots of "starting" welding materials are used for all welding processes. The welding quality assurance program includes identification and control of welding material by lots and heats as appropriate. All of the weld processing is monitored according to approved inspection programs which include review of "starting" materials, qualification records, and welding parameters. Welding systems are also subject to quality assurance audit including calibration of gages and instruments: identification of "starting"

and completed materials; welder and procedure qualifications; availability and use of approved welding and heat treating procedures; and documentary evidence of compliance with materials, welding parameters and inspection requirements. Fabrication and installation welds are inspected using nondestructive examination methods according to Section III rules.

To assure the reliability of these controls, Westinghouse has completed a delta ferrite verification program, described in Reference 4, which has been approved as a valid approach to verify the Westinghouse hypothesis and is considered an acceptable alternative for conformance with the NRC Interim Position on control of the ferrite content in stainless steel weld material. The Regulatory Staff's acceptance letter and topical report evaluation were received on December 30, 1974. The Byron/Braidwood plants utilize some components which were fabricated and inspected as part of the delta ferrite verification program; however, these components cannot necessarily be identified. The program results, which do support the hypothesis presented in Reference 4, are summarized in Reference 5.

Appendix A includes discussions which indicate the degree of conformance of the austenitic stainless steel components of the reactor coolant pressure boundary with guidelines for control of electroslag properties, and welder qualification for areas of limited accessibility.

5.2.4 Inservice Inspection and Testing of Reactor Coolant Pressure Boundary

Those components that make up the RCPB and are subject to inservice inspection under ASME Code Section XI are classified as Quality Group A. Quality group boundaries are shown on the flow diagrams with exceptions documented in the inservice inspection program. Supports for RCPB components are also subject to inservice inspection under ASME Code Section XI, with the support defined as being up to and including the attachment (weld or bolt) to the structural steel.

RCPB components and their supports have been arranged to provide sufficient accessibility and clearance to perform the required inservice inspections. Specific provisions that have been made for inspection access in the design of the reactor vessel, system layout and other RCPB components are as follows:

a. All reactor internals are completely removable. The tools and storage space required to permit reactor internals removal for these inspections are provided.

b. The reactor vessel shell in the core area is designed with a clean, uncluttered cylindrical inside surface to permit future positioning of test equipment without obstruction.

c. The reactor vessel cladding is improved in finish by grinding to the extent necessary to permit meaningful examination of the vessel welds and adjacent base metal in accordance with Section XI the ASME Code.

d. The cladding to base metal interface is ultrasonically examined to ensure satisfactory bonding to allow the volumetric inspection of the vessel welds and base metal from the vessel inside surface.

e. The reactor closure head is stored in a dry condition on the operating deck during refueling, allowing direct access for inspection.

f. The insulation on the vessel closure and lower heads is removable, allowing access for the visual examination of head penetrations.

g. All reactor vessel studs, nuts, and washers will be removed to dry storage during refueling, allowing inspection in parallel with refueling operations. (For Byron Unit 2, out of service studs may remain installed in the reactor flange when the refueling cavity is flooded.)

h. Access holes are provided in the core barrel flange allowing access for the remote visual examination of the clad surface of the vessel without removal of the lower internals assembly.

i. Removable plugs are provided in the primary shield providing access for the surface and visual examination of the primary nozzle safe-end welds.

j. Manways are provided in the steam generator channel head to provide access for internal inspection.

k. A manway is provided in the pressurizer top head to allow access for internal inspection.

l. The insulation covering all component and piping welds and adjacent base metal is designed for ease of removal and replacement in areas where external inspection will be planned.

m. Openings are provided above the main coolant pumps to permit removal of the pump motor to provide internal inspection access to the pumps.

n. The primary loop compartments are designed to allow personnel entry during refueling operations, and to permit direct inspection access to the internal portion of piping and components.

The use of conventional nondestructive, direct visual, and remote visual test techniques was applied to the

inspection of all RCPB components and complies with IWA-2210, IWA-2220, and IWA-2230 of Section XI except for the reactor vessel. The reactor vessel presents special problems because of the radiation levels and remote underwater accessibility to this component. The reactor vessel baseline inspection was performed utilizing a remote reactor vessel ultrasonic inspection tool which performs the code required inspection of the circumferential shell welds, the flange to vessel weld, the ligaments between the flange holes, the nozzle to vessel welds, and the nozzle to safe-end to pipe welds.

Hydrostatic testing is addressed in the Pressure and Temperature Limits Report (PTLR) and in accordance with ASME Section XI.

5.2.5 Detection of Leakage Through Reactor Coolant Pressure Boundary

This section describes the means for detecting and monitoring leakage of reactor coolant to the containment area.

The reactor makeup control system is used to maintain proper reactor coolant inventory. VCT level is continuously recorded and quantities of boric acid and makeup water injected are totaled and flow rates recorded in the control room. This indication provides the operator an inferential measurement of RCS leakage. An RCS mass balance is performed when leakage is suspected and at the prescribed Technical Specification intervals. This provides early indication to the operator of potential unidentified leakage.

The use of dry bulb temperatures for the reactor containment fan cooler inlet and outlets are not relied upon to quantify leakage rates. This is because small leaks at high temperatures produce the same effects as large leaks at low temperatures. Likewise, containment radiation monitoring is not relied upon to quantify leakage rate since small leakage rates of systems with high radioactivity levels produce the same effects as large leakage rates of systems with low radioactivity levels.

The containment and reactor cavity sump leak detection system have been designed to remain functional after an SSE.

The location of the containment leak detection sump is shown in Drawing A-333. Sump and weir box details are shown Drawing S-1066.

All parts of the leak detection system can be tested for operability and calibration.

The Technical Specifications include the limiting conditions for identified and unidentified leakage and address the availability of various types of instruments to ensure adequate coverage at all times.

For all units, a curb is provided around the containment recirculation sump to ensure operational leakage during non-accident conditions is directed to containment leak detection equipment, where it can be measured.

Support systems to monitor and detect leakage, both identified and unidentified, are provided and described below.

5.2.5.1 Reactor Cavity and Containment Floor Drain Sumps

a. Drawing A-701 schematically depicts the piping into the containment sump.

   For Byron Unit 1 and Braidwood, the containment floor drain sump contains a weir box for detecting and monitoring unidentified leakage. Leakage is routed to the unidentified leakage weir box through the containment floor drain system. In the unidentified leakage weir box, no normal leakage is expected and therefore its design allows detection and monitoring of 1 gpm of leakage into the weir box. Signals from a transmitter are recorded and alarmed in the main control room. In addition, Station procedures provide for alternate monitoring in circumstances where the alarm function is annunciated for reasons other than RCS leakage. The weir plate has a rectangular 1/8-inch (1/4 inch at Byron Unit 1) sharp-crested weir notch. The horizontal crest is located above the bottom of the weir box. Assuming constant flow rates of 1 gpm for unidentified leakage, the height of the water behind the weir was calculated. The change in level is a function of flow and is detected by a differential pressure transmitter fed by a bubbler system. The verification of flow sensitivity was performed in the preoperational test by passing a known measured flow into the sump and detecting the desired response. The weir boxes do not communicate directly with the containment atmosphere because the sumps, including the weir boxes, have a steel cover plate.

For Byron Unit 2 containment equipment drains, the containment floor drain sump contains a weir box for detecting and monitoring identified leakage. Leakage is routed to the identified leakage weir box through the containment floor drain system. In the identified leakage weir box, no normal leakage is expected and therefore its design allows detection and monitoring of 6 gpm of leakage into the weir box. Signals from a transmitter are recorded and alarmed in the main control room. The containment equipment

drains weir plate has a rectangular sharp-crested weir notch. The horizontal crest is located above the bottom of the weir box. Assuming a constant leakage flow rate, the height of the water behind the weir was calculated. The change in level is a function of flow and is detected by a differential pressure transmitter fed by a bubbler system. The verification of flow sensitivity was performed in the preoperational test by passing a known measured flow into the sump and detecting the desired response.

For Byron Unit 2 containment floor drains, the associated weir box has been abandoned and inlet piping rerouted into the containment floor drain sump. In lieu of the weir box to indicate leakage, the bubbler tube has been relocated and extended into the containment floor drain sump. The change in level is a function of flow and is detected by a differential pressure transmitter fed by the bubbler system. The change in sump level as a function of flow has been determined. Signals from a transmitter provide input to a main control room digital recorder. The recorder is programmed to directly calculate flowrate based on the time required for sump level to change. The verification of flow sensitivity was performed in the modification test by passing a known measured flow into the sump and detecting the desired response. The digital recorder provides indication of in-leakage flow. Outputs from the digital recorder provide input to the main control room annunciator system for alarm on a 1 gpm increase in sump in-leakage flow within one hour. The digital recorder is also programmed to prevent faulty flowrate indications during the level transient during times of normal containment floor drain sump pump operation. When the sump pump operates (normal condition), sump level is decreased rapidly, which will result in loss of steady state sump flowrate indication. After the sump pumpdown "transient" is complete, it may take a period of time for steady state flowrate indication to return to its pre-pumpdown value. The digital recorder is programmed to lock out the high flow alarm actuation until steady state flowrate indication can return after sump pumpdown.

b. The reactor cavity sump collects leakage in the reactor cavity. Similar to the Byron Unit 1 and Braidwood containment floor drain sump a weir box is provided in the sump to monitor and detect leakage. The reactor cavity sump normal leak rate was determined to be zero during plant startup testing. The weir box design will allow the detection system to respond to a 1 gpm increase in leakage into the weir box. The signal from a transmitter in the weir box is recorded and alarmed in the main control room.

c. An additional means of determining sump flow for the reactor cavity and containment floor drain sumps is provided by sump pump run time totalizing meters. This method provides an indication of water processed through the sump.

d. The time required for these sumps to respond to and alarm a leak is a function of the location of the leak relative to the sump, and is a function of whether or not the leakage flashes to steam. Once leakage begins to reach a sump, the sump design will respond to and alarm a 1 gpm leak in one hour or less. The sumps, therefore, provide both a leak detection and a leakage quantification function. The mass balance described above provides reactor coolant leakage quantification and, in conjunction with the radiation monitors discussed in Subsection 5.2.5.2, provides a reactor coolant leak detection function.

5.2.5.2 Containment Radiation Monitoring

A four-channel monitor is provided for each reactor unit to continuously sample and monitor the containment atmosphere for airborne radioactivity. The characteristics of the monitor allow it to be used for personnel protection and as a leak detection system as required by Regulatory Guide 1.45. The objective is to detect a leakage rate, or its equivalent, of 1 gpm in less than 1 hour.

The system draws a continuous sample of the containment atmosphere and routes the sample stream through a fixed filter, a charcoal filter, and a gas chamber. The sample flow rate may be preset at a desired level and is then automatically controlled. A nominal design basis flow rate of 3 cfm is assumed. The fixed filter is continuously monitored for gross beta activity with a beta scintillator. The charcoal filter is continuously monitored for iodine with a NaI(T1) detector system (window on I-131). The gas chamber is continuously monitored for gross beta activity with a beta scintillator.

The monitored media and detectors are contained in a 3-inch thick, 4π lead shield assembly. The assembly is located in a low background radiation area to minimize background counts (design basis background level for normal operation is 2 mr/hr or less).

All data is transmitted to the control room where information is appropriately displayed, recorded, and alarmed.

a. Particulate and gaseous containment radiation monitors are provided as part of the process radiation monitoring system. These monitors are discussed in Subsection 11.5.2.2.10 and listed in Table 11.5-1.

b. Area radiation monitors for the containment are provided as part of the area radiation monitoring system. These monitors are listed in Table 12.3-3.

5.2.5.2.1 Radiation Monitor Sensitivity/Response Time

The containment particulate and gaseous radiation monitor sensitivity is provided in Table 11.5-1. These sensitivities meet the sensitivities required by RG 1.45. In designing the containment radiation monitoring system, realistic primary coolant radioactivity concentrations were used. As discussed in FSAR Amendment 28, Question 212.31, and subsection 11.1.2.2 these concentrations were determined in accordance with ANSI N237-1976 and are provided in Table 11.1-4.

The detection of RCS leakage using radiation monitors ultimately relies on the quantity of isotopes that are contained in the RCS. For the situation where there is little or no activity (such as when there are no fuel leaks and/or at startup), then these monitors may not satisfy the 1 gpm leakage detection goal (since there is little or no activity to detect). Other methods of RCS leakage detection specified in RG 1.45 would be necessary as discussed in subsection 5.2.5 and Appendix A1.45.

Given the above limitations, the containment radiation monitor setpoints are set as low as practicable, considering the background radiation levels and the objective of detecting a 1 gpm leak in one hour. The monitor setpoints are periodically reviewed and changed as necessary within the limitations discussed.

5.2.5.2.2 Leak Before Break Considerations

Use of Leak-Before-Break (LBB) technology has been approved as discussed in subsection 3.6.2.1.1. Approval was based on the criteria of NUREG 1061, Vol. 3, which states that "Regulatory Guide 1.45… recommends that flow rates from identified and unidentified sources should be monitored separately, the latter to an accuracy of 1 gpm," and "should be capable of detecting 1 gpm or less in 1 hour" and that Byron and Braidwood comply with RG 1.45.

Although the containment radiation monitors may not always be capable of detecting a 1 gpm leak in 1 hour, the numerous leakage detection systems, taken as a whole, are considered to meet the intent of RG 1.45.

5.2.5.3 Containment Atmosphere Monitoring

a. Containment air pressure is continuously monitored and is alarmed and indicated in the main control room. The indicators have a range of 0-60 psig. The instrumentation is part of the process instrumentation and control.

b. Dry-bulb temperatures are provided for the reactor containment fan cooler inlets and outlets with indication in the main control room. While changes in any of these parameters may indirectly indicate reactor coolant leakage to the containment atmosphere, they are not relied upon to quantify leakage rates. These instruments are discussed in Subsection 7.3.1.1.12.

5.2.5.4 Intersystem Leakage

Leakage of any significant degree into interfacing systems connected to the reactor coolant pressure boundary (RCPB) is not expected to occur. Design and administrative provisions which serve to limit leakage include isolation valves designed for low seat leakage, periodic testing of the RCPB isolation check valves (see Subsection 6.3.4.2), and inservice inspection (see Section 6.6). Leakage is detected by the increasing of interfacing system level, temperature, and pressure indications, or by the lifting of relief valves accompanied by increasing interfacing system level, temperature, and pressure indications, or by the lifting of relief valves accompanied by

increasing values of monitored parameters in the relief valve discharge path. These systems are isolated from the reactor coolant system by normally closed valves and/or check valves.

a. Residual heat removal system (RHRS) - suction side: The RHRS is isolated from the RCS on the suction side by motor operated gate valves RH8701A/B and RH8702A/B. Leakage past these valves is detected by lifting of relief valves 8708A/or 8708B accompanied by increasing recycle holdup tank (HUT) level, pressure, and temperature indications and alarms on the main control board (MCB).

b. Safety injection system - accumulators: the accumulators are isolated from the RCS by check valves SI8948A/B/C/D and SI8956A/B/C/D. Leakage past these valves and into the accumulator subsystem is detected by redundant control room accumulator pressure and level indications and alarms.

c. Safety injection system - RHR discharge subsystem: during normal plant operation the RHRS alignment is such that it is utilized as the low pressure injection system (LPIS) portion of the safety injection system (SIS).

   The RHR/SIS discharge headers are isolated from the RCS by check valves SI8948A/B/C/D, SI8818A/B/C/D, SI8949A/C, SI8841A/B, and the normally closed motor-operated gate valve SI8840. Leakage past these valves eventually pressurize the RHR/SIS discharge headers and result in lifting of relief valves SI8856A, SI8856B, or SI8842. Relief valve lifting is accompanied by control room indication and alarms due to increasing boron recycle system - recycle holdup tank levels.

d. Safety injection system - SI pump discharge subsystem: the SI pump discharge portion of SIS is isolated from the RCS by check valves SI8948A/B/C/D, SI8819A/B/C/D, SI8949A/B/C/D, SI8905A/B/C/D, and normally closed motor-operated gate valve SI8802A/B. Leakage past these valves pressurizes the SI pump discharge header resulting in control room indication of increasing pressure and eventually relief valves SI8853A, SI8853B, or SI8851 will lift. Relief valve lifting is accompanied by control room indication and alarms of increasing boron recycle system - recycle holdup tank levels.

e. Safety injection system - centrifugal charging injection: the injection path for the centrifugal

charging pumps is isolated from the RCS by check valves SI8900A/B/C/D, SI8815, and motor-operated gate valves SI8801A/B.

Leakage past these valves is not possible since the valve inlet is pressurized by the operating charging pump(s) in the chemical and volume control system (CVCS).

f. Chemical and volume control system - normal excess letdown and charging lines: three normally closed air-operated valves in series isolate the excess letdown line from the RCS. Leakage from the RCS actuates a high temperature alarm (provided that cooling water is not flowing through the excess letdown heat exchanger).

The RCS connection to the CVCS via the letdown line is the normal letdown path and would be in operation nearly all the time.

The pressure developed by the charging pump prohibits flow from the RCS into CVCS charging lines.

Note 1: In general, if a leakage path exists such that excess leakage flows to the volume control tank (VCT), this increased leakage can be checked by comparing letdown and seal return flow with charging flow (which automatically increases to maintain pressurizer level). The difference is the leakage.

Note 2: If leakage flow is to anywhere but the VCT, the reactor makeup control system will actuate. This occurs because the charging flow automatically increases to maintain pressurizer level, which in turn depletes the VCT. The amount of makeup water required equals the leakage rate.

The provisions for detection of intersystem leakage have sensitivity to detect RCS operational leakage as defined in the Technical Specification 3.4.14.

5.2.5.5 Intersystem Leakage Monitoring

Primary to secondary system leakage is detected by one or more of the following methods.

a. Radiation monitors are provided in the steam generator blowdown system to detect a tube leak in the steam generator. The monitors are part of the process radiation monitoring system and are discussed in Subsection 11.5.2.3.3 and Table 11.5-2.

b. Steam generator tube leakage is also detected by obtaining a liquid sample from each steam generator. These samples are analyzed for the presence of radioisotopes of iodine and sodium. From the iodine or sodium activity found in a steam generator, a leak rate can be calculated.

c. Condenser Off-Gas analysis via the Steam Jet Air Ejectors.

d. Portable N-16 monitors for the main steam lines.

e. Tritium analysis of the secondary system.

f. Chemical and radiochemical analysis of the secondary system.

g. Steam generators blowdown cation columns and resin impregnated filters.

h. Main steam noble gas analysis.

5.2.5.6 Limiting Conditions for Operation

See Technical Specifications Section 3.4.13 and 3.4.15 for the limiting conditions for operation pertaining to leak detection systems and operational leakage.

5.2.5.7 Intersystem Leakage Testing

Periodic leakage testing of RCS pressure isolation valves identified as inter-system LOCA isolation check valves is done individually, with limits specified in Technical Specification Section 3.4.14 for each valve. The measurement is determined either by using installed flow meter indication on the test lines to the holdup tank, portable flow rate instrumentation, or other acceptable test measurement means.

5.2.5.8 Reactor Vessel Flange Leakage Monitoring

The reactor vessel flange and head are sealed by two metallic O-rings. These gaskets are of the hollow self-energizing type in which pressure of the fluid being sealed enters the interior of the gasket. The O-rings are fastened to the closure head by a mechanical connection to facilitate removal.

Seal leakage is detected by means of two leakoff connections: one between the inner and outer ring, and one outside the outer O-ring. A manual isolation valve is installed just outside the missile barrier of each leakoff line. Downstream of these valves the lines are headered before being routed to the reactor coolant drain tank in the waste processing system.

An air-operated isolation valve, actuated from the control board, is installed in the common line. During normal plant operation, the leakoff piping is aligned such that leakage across the inner O-ring passes through valves RC8069B (RC8069A for Byron) and RC8032 into the drain tank. A surface mounted, resistance temperature detector installed on the bottom of the common pipe signals leakage at an alarm setpoint. A blind flanged branch line containing isolation valve RC8076 is provided to confirm and to establish the magnitude of the leakage.

Once inner O-ring leakage is discovered, valve RC8069A (RC8069B for Byron) should be opened and valve RC8069B (RC8069A for Byron) closed so that possible leakage across the second O-ring would be monitored.

In addition, during plant refueling operations both the inner and outer reactor vessel flange leakoff valves are closed. This prevents possible gas leakage from the reactor coolant

drain tank to the containment atmosphere. Refer to Drawings M-60 and M-135 for the flow diagram representation.

The reactor vessel is the only flanged vessel within the reactor coolant pressure boundary that is provided with leakoff collection provisions.

5.2.5.9 Calibration and Operability Tests During Plant Operation

The following provisions have been made to permit calibration and operability tests of the entire leakage detection system during plant operation per the requirements of SRP 5.2.5 (II.8).

a. Containment and reactor cavity sumps. The leakage flow is measured by a level sensing bubbler-transmitter system. The relationship of water level and differential pressure is not expected to vary. Channel calibration of this system is performed during plant shutdowns at the appropriate interval.

b. Containment atmosphere radiation monitor. This monitor is located outside the containment. A sample is piped to the monitor from the containment. The monitor is calibrated and tested using manufacturer's recommended procedures and radioactive calibration test sources.

c. Containment area radiation monitors are initially and periodically tested using a commercial gamma calibration facility installed in the station auxiliary building.

d. Containment air pressure is monitored as follows. A bellows assembly located within the containment has a port open to containment atmosphere. The outer side of the bellows constitutes part of the pressure boundary of a sealed liquid system which penetrates the containment boundary and connects to a pressure transmitter. Four such systems are provided.

   Calibration is accomplished by connecting a test pressure source to the open port on the bellows assembly.

e. Reactor containment fan cooler inlet and outlet temperature instruments are calibrated.

f. Radiation monitors for intersystem leakage are located outside of containment and are calibrated and tested using manufacturers recommended procedures and test sources.

5.2.6 References

1. WCAP-7769, Rev. 1 (Topical Report - Overpressure Protection for Westinghouse Pressurized Water Reactors): Approved by R. Salvatori, dated June 1972. Also, letter NS-CE-622, dated April 16, 1975: C. Eicheldinger to D. B. Vassallo; Additional information on WCAP-7769, Revision 1.

2. WCAP-7907-P-A (Proprietary), WCAP-7907-A (Nonproprietary) (LOFTRAN Code Description); Burnett, T. W. T., et al, April 1984.

3. M.A. Golik, "Sensitized Stainless Steel in Westinghouse PWR Nuclear Steam Supply Systems," WCAP-7735, August 1971.

4. J.F. Enrietto, "Control of Delta Ferrite in Austenitic Stainless Steel Weldments," WCAP-8324-A, June 1974.

5. J.F. Enrietto, "Delta Ferrite in Production Austenitic Stainless Steel Weldments," WCAP-8693, January 1976.

6. Letter to the NRC, NS-CE-1228, to J.F. Stolz from C. Eicheldinger, October 4, 1976.

7. W. A. Logston, J. A. Begley, C. L. Gottshall, "Dynamic Fracture Toughness of ASME SA508 Class 2a ASME SA533 Grade A Class 2 Base and Heat Affected Zone Material and Applicable Weld Metals," WCAP-9292, March 1978.

8. ”Overpressure Protection Report for Byron/Braidwood Nuclear Power Plants Units 1 & 2,” Revision 6, November 2010.

TABLE 5.2-1

APPLICABLE CODE ADDENDA FOR RCS COMPONENTS

Reactor Vessel	ASME III, 1971 Edition through Summer 1973
Steam Generator	ASME III, 1986 Edition with no Addenda (Unit 1) ASME III, 1971 Edition through Summer 1972 and Winter 1974* (Unit 2)
Pressurizer	ASME III, 1971 Edition through Summer 1973
CRDM Housing Full Length	ASME III, 1974 Edition through Summer 1974
CRDM Head Adapter	ASME III, 1971 Edition through Summer 1973
Reactor Coolant Pump	ASME III, 1971 Edition through Winter 1972
Reactor Coolant Pipe	ASME III, 1974 Edition through Summer 1975
Surge Lines	ASME III, 1974 Edition through Summer 1975
Valves	
Pressurizer safety	ASME III, 1971 Edition through Winter 1972 ASME III, 1977 Edition through Winter 1978**
Motor-operated	ASME III, 1971 Edition through Winter 1972
Manual (3 in. and larger)	ASME III, 1971 Edition through Winter 1972
Control	ASME III, 1971 Edition through Summer 1972
Loop Stop	ASME III, 1971 Edition through Winter 1973

*Winter 1974 applicable for NB-2331 (D), NB-2332 (A)(2), NB-4332, NB-4334, NB-4334.1, NB-4334.2, NB-4335, NB-4335.1, NB-4335.2, and NB-4335.3.
**Relief capacity only.

TABLE 5.2-1a

ASME CODE CASES USED ON CLASS 1 COMPONENTS

COMPONENT	BYRON UNIT 1	BYRON UNIT 2	BRAIDWOOD UNIT 1	BRAIDWOOD UNIT 2
Steam Generator	N-20-3 N-474-1 2142-1 2143-1 N-10 N-411-1	1484 1528 1355 1493-1	N-20-3 N-474-1 2142-1 2143-1 N-10 N-411-1	1355 1484-3
Pressurizer	1528 1493-1	1528-1	1528 N-405-1 N-416-3	1528-3
Reactor Vessel	----	----	----	1395-2 1557-2
Reactor Coolant Pipe	1423-2	1423-2	1423-2	---
Valves	1552 1553 1553-1 1649	1552 1553-1 1649	1552 1553-1 1649	1552 1553-1 1649 N-3-10
Reactor Coolant Pumps	---	---	---	---

TABLE 5.2-2

CLASS 1 PRIMARY COMPONENTS

MATERIAL SPECIFICATIONS

Reactor Vessel Components

Head Plates (other than Core Region	SA533 Gr A, B or C, Class 1 or 2 (Vacuum treated)
Shell (including core region) - Flange, Nozzle Forgings	SA508 Class 2 or 3
Nozzle Safe Ends	SA182 Type F316
CRDM and/or ECCS Appurtenances - Upper Head	SB166 or 167 and SA182 Type F304
Instrumentation Tube Appurtenances - Lower Head	SB166 or 167 and SA182 Type F304, F304L or F316
Closure Studs, Nuts, Washers, Inserts and Adaptors	SA-540 Class 3 Gr B-23 or B-24
Core Support Pads	SB166 with Carbon less than 0.10%
Monitor Tubes and Vent Pipe	SA312 or 376 Type 304 or 316 Seamless or SB167 or SB166 or SA182 Type 316
Vessel Supports, Seal Ledge, and Head Lifting Lugs	SA516 Gr 70 Quenched & Tempered or SA533 Gr A, B or C, Class 1 or 2. (Vessel supports may be of weld metal buildup of equivalent strength to the Nozzle Material.)
Cladding and Buttering	Stainless Steel Weld Metal Analysis A-8 and Ni-Cr-Fe Weld Metal F-Number 43

Steam Generator Components

Unit 1

Pressure Plates	SA533 Gr. A, B, or C, Class 2
Pressure Forgings (including nozzles and tube sheet)	SA508 Class 2 or 3
Nozzle Safe Ends	Stainless Steel SA-336 Type F316N/F316LN
Channel Heads	SA-508 Class 2 or 3
Tubes	SB163 Ni-Cr-Fe Alloy 690
Cladding and Buttering	Stainless Steel Weld Metal Type 308/309 and Ni-Cr-Fe Weld Metal UNS No. 6052
Closure Bolting	SA193 Gr. B-7

TABLE 5.2-2 (Cont'd)

Unit 2

Pressure Plates	SA533 Gr. A, B, or C, Class 2
Pressure Forgings (including nozzles and tube sheet)	SA508 Class 2 or 3
Nozzle Safe Ends	Stainless Steel Weld Metal Analysis A-8
Channel Heads	SA216 Grade WCC or SA533 Gr. A, B, or C, Class 1 or 2
Tubes	SB163 Ni-Cr-Fe, Alloy 600
Cladding and Buttering	Stainless Steel Weld Metal Analysis A-8 and Ni-Cr-Fe Weld Metal F-Number 43
Closure Bolting	SA193 Gr. B-7

Pressurizer Components

Pressure Plates	SA533 Gr. A, Class 2
Pressure Forgings	SA508 Class 2
Nozzle Safe Ends	SA182 Gr. F-316 L
Cladding and Buttering	Stainless Steel Weld Metal Analysis A-8 and Ni-Cr-Fe Weld Metal F-Number 43
Closure Bolting	SA193 Gr. B-7

Reactor Coolant Pump

Pressure Forgings	SA182 F304, F316, F347, or F348
Pressure Casting	SA351 Gr CF8, CF8A, or CF8M
Tube and Pipe	SA213, SA376, or 3A312 - Seamless Type 304 or 316
Pressure Plates	SA240 Type 304 or 316
Bar Material	SA479 Type 304 or 316
Closure Bolting	SA193, SA320, SA540, SA453, Gr 660
Flywheel	SA533 Gr B, Class 1

TABLE 5.2-2 (Cont'd)

Reactor Coolant Piping

Reactor Coolant Pipe	SA376 Gr 304N
Reactor Coolant Fittings	SA351 Gr CF8A
Branch Nozzles and Connections	SA182 Code Case 1423-2 Gr F304N, SA182, F316
Surge Line and Loop Bypass	SA376 Gr 304, 316, or F304N
Auxiliary Piping 1/2 inch through 12 inches and wall schedules 40S through 80S (ahead of second isolation valve)	ANSI B36.19
All other Auxiliary piping (ahead of second isolation valve)	ANSI B36.10
Socket weld fittings	ANSI B16.11
Piping Flanges	ANSI B16.5

Full Length Control Rod Drive Mechanism

Latch Housing	SA182 Gr F304 or SA351 Gr CF8
Rod Travel Housing	SA182 Gr F304 or SA336 Gr F8
Cap	SA479 Type 304
Welding Materials	Stainless Steel Weld Metal Analysis A-8

TABLE 5.2-3

CLASS 1 AND 2 AUXILIARY COMPONENTS

MATERIAL SPECIFICATIONS

VALVES	
Bodies	SA182 Type F316 or SA351 Gr CF8 or CF8M
Bonnets	SA182 Type F316 or SA351 Gr CF8 or CF8M
Discs	SA182 Type F316 or SA564 Gr 630
Pressure Retaining Bolting	SA453 Gr 660 or SA351GR CF8 or CF8M
Pressure Retaining Nuts	SA453 Gr 660 or SA194 Gr 6 or SA540 Gr B23
Auxiliary Heat Exchangers	
Heads	SA182 Gr F304 or SA240 Type 304 or 316
Flanges	SA182 Gr F304 or F316, SA105 with stainless steel weld metal analysis A-8 cladding
Flange Necks	SA182 Gr F304 or SA240 Type 316 or SA312 Type 304 Seamless, SA105 with stainless steel weld metal analysis A-8 cladding
Tubes	SA213 TP304, SA249 TP 304
Tube Sheets	SA240 Type 304 or 316 or SA182 Gr F304 or SA515 Gr 70 with stainless steel weld metal analysis A-8 cladding
Shells	SA351 GR CF8 or SA240 Type 304
Pipe	SA312 Type 304 Seamless and welded
Fittings	SA403 Type 304

TABLE 5.2-3 (Cont'd)

Auxiliary Pressure Vessels, Tanks, Filters, etc.	
Shells and Heads	SA351 Gr CF8A, SA240 Type 304, SA264 Clad Plate of SA537 Gr B with SA240 Type 304 Clad and Stainless Steel
Weld	Overlay A-8 Analysis
Flanges and Nozzles	SA182 Gr F304, SA350 Gr LF2 with SA240 Type 304 and Stainless Steel Weld Overlay A-8 Analysis
Piping	SA312 TP304 or TP316 Seamless
Pipe Fittings	SA403 WP304 Seamless
Closure Bolting and Nuts	SA193 Gr B7 and SA194 Gr 2H
Auxiliary Pumps	
Pump Casing and Heads	SA351 Gr CF8 or CF8M, SA182 Gr F304 or F316
Flanges and Nozzles	SA182 Gr F304 or F316, F316L, SA403 Gr WP316L Seamless
Piping	SA312 TP304 or TP316 Seamless
Stuffing or Packing Box Cover	SA351 Gr CF8 or CF8M, SA240 GR 304 or 316
Pipe Fittings	SA403 Gr WP316L Seamless
Closure Bolting and Nuts	SA193 Gr B6, B7, B8 or B8M and SA194 GR 2H or Gr 8M, SA193 Gr B6, B7 or B8M; SA453 Gr 660; and Nuts, SA194 Gr 2H, GR8, Gr 8M, and GR 6

TABLE 5.2-4

REACTOR VESSELS INTERNALS FOR EMERGENCY CORE COOLING

Forgings	SA-182, Grade F304
Plates	SA-240, Type 304
Pipes	SA-312, Grade TP304 Seamless or SA-376 Type 304
Tubes	SA-213, Grade TP304
Bars	SA-479, Type 304 or 410
Castings	SA-351, Grade CF8 or CF8A
Bolting	SA-193, Grade B8M Code Case 1618 (Code Case N-60-5) SA-479, Type 316, Strain hardened Code Case 1618 (Code Case N-60-5) Inconel-750, SA-637, Grade 688, Type 2
Nuts	SA-194, Grade 8, 8A, or 8M
Locking Devices	SA-479, Type 304 or 304L
Welding Materials	Stainless Steel, analysis A-8

5.3 REACTOR VESSEL

5.3.1 Reactor Vessel Materials

This section is for purposes of reactor pressure vessel fabrication.

5.3.1.1 Material Specifications

Material specifications are in accordance with the ASME Code requirements and are given in Subsection 5.2.3.

5.3.1.2 Special Processes Used for Manufacturing and Fabrication

a. The vessel is Seismic Category I and Quality Group A. Design and fabrication of the reactor vessel is carried out in strict accordance with ASME Code, Section III, Class 1 requirements. The head flanges and nozzles are manufactured as forgings. The cylindrical portion of the vessel is made up of several forged shells. The hemispherical heads are made from dished plates. The reactor vessel parts are joined by welding, using the single or multiple wire submerged arc.

b. The use of severely sensitized steel as a pressure boundary material has been prohibited and has been eliminated by either a select choice of material or by programming the method of assembly.

c. The control rod drive mechanism head adaptor threads and surfaces of the guide studs are chrome plated to prevent possible galling of the mated parts.

d. At all locations in the reactor vessel where stainless steel and Inconel are joined, the final joining beads are Inconel weld metal in order to prevent cracking.

e. The location of full penetration weld seams in the upper closure head and vessel bottom head are restricted to areas that permit accessibility during inservice inspection.

f. The stainless steel clad surfaces are sampled to ensure that composition and delta ferrite requirements are met.

g. The procedure qualification for cladding low alloy steel (SA508 Class 2) requires a special evaluation to ensure freedom from underclad cracking.

5.3.1.3 Special Methods for Nondestructive Examination

The examination requirements detailed in the following are in addition to the examination requirements of Section III of the ASME Code.

The reactor vessel nondestructive examination (NDE) program is given in Table 5.3-1.

5.3.1.3.1 Ultrasonic Examination

a. In addition to the design code straight beam ultrasonic test, angle beam inspection of 100% of plate material is performed during fabrication to detect discontinuities that may be undetected by longitudinal wave examination.

b. In addition to ASME Section III nondestructive examination, all full penetration welds and heat affected zones in the reactor vessel are ultrasonically examined during fabrication. This test is performed upon completion of the welding and intermediate heat treatment but prior to the final postweld heat treatment.

c. The reactor vessel is examined after hydrostatic testing for information.

5.3.1.3.2 Penetrant Examinations

The partial penetration welds for the control rod drive mechanism head adaptors and the bottom instrumentation tubes are inspected by dye penetrant after the root pass in addition to code requirements. Core support block attachment welds were inspected by dye penetrant after first layer of weld metal and after each 1/2 inch of weld metal. All clad surfaces and other vessel and head internal surfaces were inspected by dye penetrant after the hydrostatic test.

5.3.1.3.3 Magnetic Particle Examination

All magnetic particle examinations of materials and welds were performed in accordance with the following:

a. Prior to the final postweld heat treatment - by the prod, coil, or direct contact method.

b. After the final postweld heat treatment - by the yoke method.

The following surfaces and welds were examined by magnetic particle methods.

Surface Examinations

a. Magnetic particle examination of all exterior vessel and head surfaces after the hydrostatic test.

b. Magnetic particle examination of all exterior closure stud surfaces and all nut surfaces after final machining or rolling. Continuous circular and longitudinal magnetization were used.

c. Magnetic particle examination of all inside diameter surfaces of carbon and low alloy steel products that have their properties enhanced by accelerated cooling. This inspection is performed after forming and machining (if required) and prior to cladding.

Weld Examination

Magnetic particle examination of the weld metal buildup for vessel welds attaching the closure head lifting lugs to the reactor vessel after the first layer and each 1/2 inch of weld metal is deposited. All pressure boundary welds were examined after back chipping or back grinding operations.

5.3.1.4 Special Controls for Ferritic and Austenitic Stainless Steels

Welding of ferritic steels and austenitic stainless steels is discussed in Subsection 5.2.3. Subsection 5.2.3 includes discussions which indicate the degree of acceptance with guidelines for control of ferrite content in stainless steel metal welds, use of sensitized stainless steel, electroslag weld properties, stainless steel weld cladding of low-alloy steel components and welder qualification for areas of limited accessibility. Appendix A discusses the degree of conformance with regulatory guides.

5.3.1.5 Fracture Toughness

Assurance of adequate fracture toughness of ferritic materials in the reactor coolant pressure boundary (ASME Section III Class 1 Components) is provided by compliance with the requirements for fracture toughness testing included in NB-2300 to Section III of the ASME Boiler and Pressure Vessel Code, and Appendix G of 10 CFR 50.

The initial Charpy V-notch minimum upper shelf fracture energy levels for the reactor vessel beltline (including welds) shall be 75 foot-pounds as required by Appendix G of 10 CFR 50. Materials having a section thickness greater than 10 inches with an upper shelf of less than 75 foot-pounds shall be evaluated with regard to effects of chemistry (especially copper content), initial upper shelf energy and influence to

ensure that a 50 foot-pound shelf energy as required by Appendix G of 10 CFR 50 is maintained throughout the life of the vessel. The specimens shall be oriented as required by NB-2300 of Section III of the ASME Boiler and Pressure Vessel Code. The reactor vessel material properties for units of the Byron/Braidwood Stations are given in Section 5 of the PTLR.

5.3.1.5.1 Pressurized Thermal Shock Evaluation

Fracture toughness requirements for protection of reactor vessels against pressurized thermal shock events are given in 10 CFR 50.61. Reference 9 provides the initial assessment of Pressurized Thermal Shock. Subsequently, evaluations which include surveillance capsule data have been performed in accordance with the requirements of 10 CFR 50.61 for the reactor vessels at Byron / Braidwood Units 1 and 2. The evaluations are provided in References 1 and 2 and the evaluation results are summarized in References 3 and 4 and Tables 5.3-7 through 5.3-10.

5.3.1.6 Material Surveillance

In the surveillance program, the evaluation of the radiation damage is based on preirradiation testing of Charpy V-notch and tensile specimens and postirradiation testing of Charpy V-notch, tensile and 1/2 thickness (T) compact tension (CT) fracture mechanics test specimens. The program is directed toward evaluation of the effect of radiation on the fracture toughness of reactor vessel steels based on the transition temperature approach and the fracture mechanics approach. The program conforms with ASTM-E-185 "Recommended Practice for Surveillance Tests for Nuclear Reactor Vessels," and 10 CFR 50, Appendix H.

Detailed information on the reactor vessel material surveillance program is provided in Westinghouse reports WCAP-9517 for Byron Unit 1, WCAP-10398 for Byron Unit 2, and WCAP-9807 for Braidwood Unit 1 and WCAP-11188 for Braidwood 2.

The reactor vessel surveillance program uses six specimen capsules. The capsules are located in guide baskets welded to the outside of the neutron shield pads and are positioned directly opposite the center portion of the core. The capsules can be removed when the vessel head is removed and can be replaced when the internals are removed. The six capsules contain reactor vessel steel specimens, oriented both parallel and normal (longitudinal and transverse) to the principal working direction of the limiting base material located in the core region of the reactor vessel and associated weld metal and weld heat-affected zone metal. The 6 capsules contain 54 tensile specimens, 360 Charpy V-notch specimens (which include weld metal and weld heat-affected zone material), and 72 CT specimens. Archive material sufficient for two additional capsules will be retained.

Dosimeters, including Ni, Cu, Fe, Co-Al, Cd shielded Co-Al, Cd shielded Np-237 and Cd shielded U-238, are placed in filler blocks drilled to contain them. The dosimeters permit evaluation of the flux seen by the specimens and the vessel wall. In addition, thermal monitors made of low melting point alloys are included to monitor the maximum temperature of the specimens. The specimens are enclosed in a tight-fitting stainless steel sheath to prevent corrosion and ensure good thermal conductivity. The complete capsule is helium leak tested.

Each of the six capsules contains the following specimens:

Material	Number of Charpys	Number of Tensiles	Number of CTs
Limiting base material*	15	3	4
Limiting base material**	15	3	4
Weld metal***	15	3	4
Heat affected zone	15		

* Specimens oriented in the major working direction.

** Specimens oriented normal to the major working direction.

*** Weld metal to be selected per ASTM E185.

The following dosimeters and thermal monitors are included in each of the six capsules:

Dosimeters

Iron

Copper

Nickel

Cobalt-Aluminum (0.15% Co)

Cobalt-Aluminum (Cadmium shielded)

U-238 (Cadmium shielded)

Np-237 (Cadmium shielded)

Thermal Monitors

97.5% Pb, 2.5% Ag (579°F melting point).

97.5% Pb, 1.75% Ag, 0.75% Sn (590°F melting point).

The fast neutron exposure of the specimens occurs at a faster rate than that experienced by the vessel wall, with the specimens being located between the core and the vessel. Since these specimens experience accelerated exposure and are actual samples from the materials used in the vessel, the transition temperature shift measurements are representative of the vessel at a later time in life. Data from CT fracture toughness specimens are expected to provide additional information for use in determining allowable stresses for irradiated material.

Correlations between the calculations and the measurements of the irradiated samples in the capsules, assuming the same neutron spectrum at the samples and the vessel inner wall, are described in Subsection 5.3.1.6.1. They have indicated good agreement. The anticipated degree to which the specimens will perturb the fast neutron flux and energy distribution will be considered in the evaluation of the surveillance specimen data. Verification and possible readjustment of the calculated wall exposure will be made by use of data on all capsules withdrawn. For the schedule for removal of the capsules for postirradiation testing which follows that of 10 CFR 50 Appendix H, refer to Table 4.1 of the PTLR.

5.3.1.6.1 Measurement of Integrated Fast Neutron (E>1.0 MeV) Flux at the Irradiation Samples

The use of passive neutron sensors such as those included in the internal surveillance capsule dosimetry sets dose not yield a direct measure of the energy dependent neutron flux level at the measurement location. Rather, the activation or fission process is a measure of the integrated effect that the time- and energy-dependent neutron flux has on the target material over the course of the irradiation period. An accurate assessment of the average flux level and, hence, time integrated exposure (fluence) experienced by the sensors may be developed from the measurements only if the sensor characteristics and the parameters of the irradiation are well known. In particular, the following variables are of interest:

1. The measured specific activity of each sensor
2. The physical characteristics of each sensor
3. The operating history of the reactor
4. The energy response of each sensor
5. The neutron energy spectrum at the sensor location

In this section the procedures used to determine sensor specific activities, to develop reaction rates for individual sensors from the measured specific activities and the operating history of the reactor, and to derive key fast neutron exposure parameters from the measured reaction rates are described.

5.3.1.6.1.1 DETERMINATION OF SENSOR REACTION RATES

The specific activity of each of the radiometric sensors is determined using established ASTM procedures. Following sample preparation and weighing, the specific activity of each sensor is determined by means of a high purity germanium gamma spectrometer. In the case of the surveillance capsule multiple foil sensor sets, these analyses are performed by direct counting of each of the individual wires; or, as in the case of U-238 and Np-237 fission monitors, by direct counting preceded by dissolution and chemical separation of cesium from the sensor.

The irradiation history of the reactor over its operating lifetime is determined from plant power generation records. In particular, operating data are extracted on a monthly basis from reactor startup to the end of the capsule irradiation period. For the sensor sets utilized in the surveillance capsule irradiations, the half-lives of the product isotopes are long enough that a monthly histogram describing reactor operation has proven to be an adequate representation for use in radioactive decay corrections for the reactions of interest in the exposure evaluations.

Having the measured specific activities, the operating history of the reactor, and the physical characteristics of the sensors, reaction rates referenced to full power operation are determined from the following equation:

$$R = \frac{A}{N_o \, F \, Y \, \Sigma_j \frac{P_j}{P_{ref}} C_j \left[1 - e^{-\lambda t_j}\right] e^{-\lambda t_d}}$$

where:

A	=	measured specific activity (dps/gm)
R	=	reaction rate averaged over the irradiation period and referenced to operation at a core power level of P_{ref} (rps/nucleus).
N_o	=	number of target element atoms per gram of sensor.
F	=	weight fraction of the target isotope in the sensor material.
Y	=	number of product atoms produced per reaction.
P_j	=	average core power level during irradation period j (MW).
P_{ref}	=	maximum or reference core power level of the reactor (MW).

C_j = calculated ratio of ν (E > 1.0 MeV) during irradiation period j to the time weighted average ν (E > 1.0 MeV) over the entire irradiation period.

λ = decay constant of the product isotope (sec^{-1}).

t_j = length of irradiation period j (sec).

t_d = decay time following irradiation period j (sec).

and the summation is carried out over the total number of monthly intervals comprising the total irradiation period.

In the above equation, the ratio P_j/P_{ref} accounts for month by month variation of power level within a given fuel cycle. The ratio C_j is calculated for each fuel cycle and accounts for the change in sensor reaction rates caused by variations in flux level due to changes in core power spatial distributions from fuel cycle to fuel cycle. Since the neutron flux at the measurement locations within the surveillance capsules is dominated by neutrons produced in the peripheral fuel assemblies, the change in the relative power in these assemblies from fuel cycle to fuel cycle can have a significant impact on the activation of neutron sensors. For a single-cycle irradiation, C_j = 1.0. However, for multiple-cycle irradiations, particularly those employing low leakage fuel management, the additional C_j correction must be utilized in order to provide accurate determinations of the decay corrected reaction rates for the dosimeter sets contained in the surveillance capsules.

5.3.1.6.1.2 Corrections to Reaction Rate Data

Prior to using the measured reaction rates in the least squares adjustment procedure discussed in Section 5.4.3.6.1.3, additional corrections are made to the U-238 measurements to account for the presence of U-235 impurities in the sensors as well as to adjust for the build-in of plutonium isotopes over the course of the irradiation.

In addition to the corrections made for the presence of U-235 in the U-238 fission sensors, corrections are also made to both the U-238 and Np-237 sensor reaction rates to account for gamma ray induced fission reactions occurring over the course of the irradiation.

5.3.1.6.1.3 Least Squares Adjustment Procedure

Least squares adjustment methods provide the capability of combining the measurement data with the neutron transport calculation resulting in a Best Estimate neutron energy spectrum with associated uncertainties. Best Estimate for key exposure parameters such as ϕ(E > 1.0 MeV) or dpa/s along with their uncertainties are then easily obtained from the adjusted spectrum. The use of measurements in combination with the analytical results reduces the uncertainty in the calculated spectrum and acts to remove biases that may be present in the analytical technique.

In general, the least squares methods, as applied to pressure vessel fluence evaluations, act to reconcile the measured sensor reaction rate data, dosimetry reaction cross-sections, and the calculated neutron energy spectrum within their respective uncertainties. For example,

$$R_i \pm \delta_{R_i} = \sum_g \left(\sigma_{ig} \pm \delta\sigma_{ig}\right)\left(\phi_g \pm \delta_{\phi_g}\right)$$

relates a set of measured reaction rates, R_i, to a single neutron spectrum ϕ_g, through the multigroup dosimeter cross-section, σ_{ig}, each with an uncertainty δ.

The use of least squares adjustment methods in LWR dosimetry evaluations is not new. The American Society for Testing and Materials (ASTM) has addressed the use of adjustment codes in ASTM Standard E944, "Application of Neutron Spectrum Adjustment Methods in Reactor Surveillance" and many industry workshops have been held to discuss the various applications. For example, the ASTM-EURATOM Symposia on Reactor Dosimetry holds workshops on neutron spectrum unfolding and adjustment techniques at each of its bi-annual conferences.

Th primary objective of the least squares evaluation is to produce unbiased estimates of the neutron exposure parameters at the location of the measurement. The analytical method alone may be deficient because it inherently contains uncertainty due to the input assumptions to the calculation. Typically these assumptions include parameters such as the temperature of the water in the peripheral fuel assemblies, by-pass region, and downcomer regions, component dimensions, and peripheral core source. Industry consensus indicates that the use of calculation alone results in overall uncertainties in the neutron exposure parameters in the range of 15-20% (1σ).

By combining the calculated results with available measurements, the uncertainties associated with the key neutron exposure parameters can be reduced. Specifically ASTM Standard E 944 states; *"The algorithims of the adjustment codes tend to decrease the variances of the adjusted data compared to the corresponding input values. The least squares adjustment codes yield estimates for the output data with minimum variances, that is, the "best estimates". This is the primary reason for using these adjustment procedures"*. ASTM E 944 provides a comprehensive listing of available adjustment codes.

The FERRET least squares adjustment code (Reference 5) was initially developed at the Hanford Engineering Development Laboratory (HEDL) and has had extensive use in both the Liquid Metal Fast Breeder (LMFBR) program and the NRC Sponsored Light Water Reactor Dosimetry Improvement Program (LWR-PV-SDIP). As a result of participation in several cooperative efforts associated with the LWR-PV-SDIP, the FERRET approach was adopted by Westinghouse in

the mid 1980's as the preferred approach for the evaluation of LWR surveillance dosimetry. The least squares methodology was judged superior to the previously employed spectrum averaged cross-section approach that is totally dependent on the accuracy of the shape of the calculated neutron spectrum at the measurement locations.

The FERRET code is employed to combine the results of plant specific neutron transport calculations and multiple foil reaction rate measurements to determine best estimate values of exposure parameters (ϕ (E > 1.0 MeV) and dpa) along with associated uncertainties at the measurement locations.

The application of the least squares methodology requires the following input:

1. The calculated neutron energy spectrum and associated uncertainties at the measurement location.

2. The measured reaction rate and associated uncertainty for each sensor contained in the multiple foil set.

3. The energy dependent dosimetry reaction cross-sections and associated uncertainties for each sensor contained in the multiple foil sensor set.

For a given application, the calculated neutron spectrum is obtained from the results of plant specific neutron transport calculations applicable to the irradiation period experienced by the dosimetry sensor set. This calculation is performed using the benchmarked transport calculational methodology described in Section 5.3.1.6.2. The sensor reaction rates are derived from the measured specific activities obtained from the counting laboratory using the specific irradiation history of the sensor set to perform the radioactive decay corrections. The dosimetry reaction cross-sections and uncertainties are obtained from the SNLRML dosimetry cross-section library (Reference 6). The SNLRML library is an evaluated dosimetry reaction cross-section compilation recommended for use in LWR evaluations by ASTM Standard E1018, "Application of ASTM Evaluated Cross-Section Data File, Matrix E 706 (IIB)". There are no additional data or data libraries built into the FERRET code system. All of the required input is supplied externally at the time of the analysis.

The uncertainties associated with the measured reaction rates, dosimetry cross-sections, and calculated neutron spectrum are input to the least squares procedure in the form of variances and covariances. The assignment of the input uncertainties also follows the guidance provided in ASTM Standard E 944.

5.3.1.6.2 Calculation of Integrated Fast Neutron (E > 1.0 MeV) Flux at the Irradiation Samples

A generalized set of guidelines for performing fast neutron exposure calculations within the reactor configuration, and procedures for analyzing measured irradiation sample data that can be correlated to these calculations, has been promulgated by the Nuclear Regulatory Commission (NRC) in Regulatory Guide 1.190, "Calculational and Dosimetry Methods for Determining Pressure Vessel Neutron Fluence" [Reference 7]. Since different calculational models exist and are continuously evolving along with the associated model inputs, e.g., cross-section data, it is worthwhile summarizing the key models, inputs, and procedures that the NRC staff finds acceptable for use in determining fast neutron exposures within the reactor geometry. This material is highlighted below.

Calculation and Dosimetry Measurement Procedures

The selection of a particular geometric model, the corresponding input data, and the overall methodology used to determine fast neutron exposures within the reactor geometry are based on the needs for accurately determining a solution to the problem that must be solved and the date/resources that are currently available to accomplish this task. Based on these constraints, engineering judgment is applied to each problem based on an analyst's thorough understanding of the problem, detailed knowledge of the plant, and due consideration to the strengths and weaknesses associated with a given calculational model and/or methodology. Based on these conditions, Regulatory Guide 1.190 does not recommend using a singular calculational technique to determine fast neutron exposures. Instead, Regulatory Guide 1.190 suggests that one of the following neutron transport tools be used to perform this work.

- Discrete Ordinates Transport Calculation

  1. Adjoint calculations benchmarked to a reference-forward calculation, or stand-alone forward calculations.

  2. Various geometrical models utilized with suitable mesh spacing in order to accurately represent the spatial distribution of the material compositions and source.

  3. In performing discrete ordinates calculations, Regulatory Guide 1.190 also suggests that a P_3 angular decomposition of the scattering cross-sections be used, as a minimum.

  4. Regulatory Guide 1.190 also recommends that discrete ordinates calculations utilize S_8 angular quadrature, as a minimum.

  5. Regulatory Guide 1.190 indicates that the latest version of the Evaluated Nuclear Data File, or ENDF/B, should be used for determining the nuclear cross-sections; however, cross-sections based on earlier or equivalent nuclear data sets that have been thoroughly benchmarked are also acceptable.

- Monte Carlo Transport Calculations

A complete description of the Westinghouse pressure vessel neutron fluence methodology along with the SER documenting NRC staff approval of the method and computer codes are provided in Reference 8.

Plant-Specific Calculations

The most recent fast (E > 1.0 MeV) neutron fluence evaluations for each of the Byron and Braidwood reactor pressure vessels were based on a 2D/1D synthesis of neutron fluxes that were obtained from a series of plant- and cycle-specific forward discrete ordinates transport calculations run in R-Θ, R-Z, and R geometric models. The set of calculations, which assessed dosimetry as part of the reactor vessel surveillance program and pressure vessel neutron fluences, were conducted in accordance with the guidelines that are specified in Regulatory Guide 1.190.

5.3.1.7 Reactor Vessel Fasteners

The reactor vessel closure studs, nuts, and washers are designed, fabricated, and examined in accordance with the requirements of ASME Section III. The closure studs are fabricated of SA-540, Class 3 Grade B23 material. The closure stud material meets the fracture toughness requirements of ASME Section III, and 10 CFR 50 Appendix G. Representative closure head bolting material properties for the Byron and Braidwood Stations are given in Tables 5.3-3a and b. The guidelines for materials and inspections for vessel closure studs are discussed in Appendix A. Inservice nondestructive examinations are performed in accordance with the station ISI program.

The studs, nuts, and washers are removed from the refueling cavity and stored at convenient locations on the containment operating deck prior to removal of the reactor closure head and refueling cavity flooding. Therefore, the reactor closure studs are never exposed to the borated refueling cavity water. Additional protection against the possibility of incurring corrosion effects is ensured by the use of a manganese base phosphate surfacing treatment. (For Byron Unit 2, out of service studs may remain installed in the reactor flange when the refueling cavity is flooded.)

The stud holes in the reactor flange are sealed with special plugs before removing the reactor closure thus preventing leakage of the borated refueling water into the stud holes. (For Byron Unit 2, out of service studs remaining installed in the reactor flange do not have these special plugs installed, therefore, prior to returning the stud to service, the out of service stud is removed and the stud hole inspected per existing procedures.)

5.3.2 Pressure-Temperature Limits

5.3.2.1 Limit Curves

Startup and shutdown operating limitations are based on the properties of the core region materials of the reactor pressure vessel. Actual material property test data are used. The methods outlined in Appendix G to Section XI of the ASME Code are employed for the shell regions in the analysis of protection against nonductile failure. The initial operating curves are calculated assuming a period of reactor operation such that the beltline material will be limiting. The heatup and cooldown curves are given in Figures 2.1, 2.2 and Table 2.1 of each station's Pressure Temperature Limits Report (PTLR). Beltline material properties change with radiation exposure, and this change is measured in terms of the adjusted reference nil ductility temperature which includes a reference nil ductility temperature shift (ΔRT_{NDT}).

Predicted ΔRT_{NDT} values are derived based on predicted neutron fluence at the assumed vessel wall flaw locations and the methodology provided in Regulatory Guide 1.99, Revision 2. The expected neutron fluence for reactor vessel wall locations of 1/4 T (thickness) and 3/4 T are determined. These reactor vessel wall locations represent the tips of the code reference flaw when the flaw is assumed at the inside diameter and outside diameter locations, respectively. The methodology provided within Regulatory Guide 1.99, Revision 2 is used to calculate ΔRT_{NDT} based on the effects of neutron fluence and the effects of chemical composition of the vessel wall material (specifically, copper and nickel). For a selected time of operation, this shift is assigned a sufficient magnitude so that no unirradiated ferritic materials in other components of the reactor coolant system will be limiting in the analysis.

The operating curves including pressure-temperature limitations, are calculated in accordance with 10 CFR 50, Appendix G, and ASME Code Section XI, Appendix G requirements. In addition, Byron Units 1 and 2 and Braidwood Units 1 and 2 have received exemptions from the 10 CFR 50, Appendix G, flange region requirements. The exemption allows for removal of the pressure limitations that are governed by the limiting RT_{NDT} of the closure head flange or vessel flange. The pressure-temperature curves in the PTLR account for this exemption. Changes in fracture toughness of the core region plates or forgings, weldments and associated heat affected zones due to radiation damage will be monitored by a surveillance program which conforms with ASTM E-185, "Recommended Practice for Surveillance

Tests for Nuclear Reactor Vessels," and 10 CFR 50, Appendix H. Byron and Braidwood Stations have received permission from the NRC to integrate the reactor vessel surveillance programs per 10CFR50, Appendix H, Section III.C. This allows the surveillance programs to be integrated for Byron Units 1 and 2, and Braidwood Units 1 and 2, respectively. The evaluation of the radiation damage in this surveillance program is based on preirradiation testing of Charpy V-notch and tensile specimens and postirradiation testing of Charpy V-notch, tensile, and 1/2 T compact tension specimens. The postirradiation testing will be carried out during the lifetime of the reactor vessel. Specimens are irradiated in capsules

located near the core midheight and removable from the vessel at specified intervals.

The results of the radiation surveillance program will be used to verify that the ΔRT_{NDT} predicted from the effects of the fluence, or copper and nickel content is appropriate and to make any changes necessary to correct the fluence, or copper and nickel content if ΔRT_{NDT} determined from the surveillance program is greater or less than the predicted ΔRT_{NDT}. Temperature limits for preservice hydrotests and inservice leak and hydrotests were calculated in accordance with 10 CFR 50, Appendix G.

The surveillance program withdrawal summary is contained in Table 4.1 of the PTLR document for each unit, respectively. Changes to the withdrawal summary may be made as part of an update to the PTLR under the provisions of 10 CFR 50.59. The schedule for removal of the capsules for post irradiation testing follows that of 10 CFR 50 Appendix H, as specified in Section 5.3.1.6.

Regulatory guides are discussed in Appendix A.

5.3.2.2 Operating Procedures

The transient conditions that are considered in the design of the reactor vessel are presented in Subsection 3.9.1.1. These transients are representative of the operating conditions that should prudently be considered to occur during plant operation. The transients selected form a conservative basis for evaluation of the RCS to ensure the integrity of the RCS equipment.

Those transients listed as upset condition transients are listed in Table 3.9-1. None of these transients will result in pressure-temperature changes which exceed the heatup and cooldown limitations as described in Subsection 5.3.2.1 and in the Pressure Temperature Limits Report (PTLR).

5.3.3 Reactor Vessel Integrity

5.3.3.1 Design

The reactor vessel is cylindrical with a welded hemispherical bottom head and removable, bolted, flanged, and gasketed, hemispherical upper head. The reactor vessel flange and head are sealed by two hollow metallic O-rings. Seal leakage is detected by means of two leakoff paths: one between the inner and outer ring, and one outside the outer O-ring. The vessel contains the core, core support structures, control rods, and other parts directly associated with the core. The reactor vessel closure head contains head adapters. These head adapters are tubular members, attached by partial penetration welds to the underside of the closure head. The upper end of these adapters contain acme threads for the assembly of control rod drive mechanisms or instrumentation adapters. The seal

arrangement at the upper end of these adapters consists of a welded flexible canopy seal. Inlet and outlet nozzles are located symmetrically around the vessel. Outlet nozzles are arranged on the vessel to facilitate optimum layout of the reactor coolant system equipment. The inlet nozzles are tapered from the coolant loop vessel interfaces to the vessel inside wall to reduce loop pressure drop.

The bottom head of the vessel contains penetration nozzles for connection and entry of the nuclear incore instrumentation. Each nozzle consists of a tubular member made of either an Inconel or an Inconel-stainless steel composite tube. Each tube is attached to the inside of the bottom head by a partial penetration weld.

Internal surfaces of the vessel which are in contact with primary coolant are weld overlay with 0.125 inch minimum of stainless steel or Inconel. The exterior of the reactor vessel is insulated with canned stainless steel reflective sheets. The insulation is a minimum of 3 inches thick and contoured to enclose the top, sides, and bottom of the vessel. All the insulation modules are removable but the access to vessel side insulation is limited by the surrounding concrete.

The reactor vessel is designed and fabricated in accordance with the requirements of ASME Section III.

Principal design parameters of the reactor vessel are given in Table 5.3-2. The vessel is shown in Figure 5.3-1.

Cyclic loads are introduced by normal power changes, reactor trip, and startup and shutdown operations. These design base cycles are selected for fatigue evaluation and constitute a conservative design envelope for the projected plant life. Vessel analysis result in a usage factor that is less than 1.

The design specifications require analysis to prove that the vessel is in compliance with the fatigue and stress limits of ASME Section III. The loading and transients specified for the analysis are based on the most severe conditions expected during service. The heatup and cooldown rates imposed by plant operating limits are provided in the Pressure and Temperature Limits Report (PTLR). These rates are reflected in the vessel design specifications.

5.3.3.2 Materials of Construction

The materials used in the fabrication of the reactor vessel are discussed in Subsection 5.2.3.

5.3.3.3 Fabrication Methods

The fabrication methods used in the construction of the reactor vessel are discussed in Subsection 5.3.1.2.

5.3.3.4 Inspection Requirements

The inspection methods used in conjunction with the fabrication of the reactor vessel are described in Subsection 5.3.1.3.

5.3.3.5 Shipment and Installation

The reactor vessel was shipped in a horizontal position on a shipping sled with a vessel-lifting truss assembly. All vessel openings were sealed to prevent the entrance of moisture and an adequate quantity of desiccant bags was placed inside the vessel. These were placed in a wire mesh basket attached to the vessel cover. All carbon steel surfaces were painted with a heat resistant paint before shipment except for the vessel support surfaces and the top surface of the external seal ring.

The closure head was also shipped with a shipping cover and skid. An enclosure attached to the ventilation shroud support ring protected the control rod mechanism housings. All head openings were sealed to prevent the entrance of moisture and an adequate quantity of desiccant bags were placed inside the head. These were placed in a wire-mesh basket attached to the head cover. All carbon steel surfaces were painted with heat-resistant paint before shipment. A lifting frame was provided for handling the vessel head.

5.3.3.6 Operating Conditions

Operating limitations are presented in Subsection 5.3.2 and in the Technical Specifications. The procedures and methods used to ensure the integrity of the reactor vessel under the most severe postulated conditions are described in Subsection 3.9.1.4.

5.3.3.7 Inservice Surveillance

The internal surface of the reactor vessel is capable of inspection periodically using visual and/or nondestructive techniques over the accessible areas. During refueling, the vessel cladding is capable of being inspected in certain areas such as the primary coolant outlet nozzles and, if deemed necessary, the core barrel is capable of being removed, making the entire inside vessel surface accessible.

The closure head is examined visually in accordance with the requirements of ASME Section XI. Optical devices permit a selective inspection of the cladding, control rod drive mechanism nozzles, and the gasket seating surface. The knuckle transition piece, which is the area of highest stress of the closure head, is accessible on the outer surface for visual inspection, dye penetrant or magnetic particle, and ultrasonic testing. The closure studs can be inspected periodically using visual, magnetic particle and/or ultrasonic techniques.

The full penetration welds in the following areas of the installed irradiated reactor vessel are available for visual and/or nondestructive inspection:

a. Vessel shell - from the inside surface.

b. Primary coolant nozzles - from the inside surface.

c. Closure head - from the inside and outside surfaces.

d. Closure studs, nuts, and washers.

e. Field welds between the reactor vessel, nozzles, and the main coolant piping.

f. Vessel flange seal surface.

The design considerations which have been incorporated into the system design to permit the above inspection are as follows:

a. All reactor internals are completely removable. The tools and storage space required to permit these inspections are provided.

b. The closure head is stored dry on the reactor operating deck during refueling to facilitate direct visual inspection.

c. All reactor vessel studs, nuts, and washers can be removed to dry storage during refueling.

d. Removable plugs are provided in the primary shield. The insulation covering the nozzle welds may be removed.

The reactor vessel presents access problems because of the radiation levels and remote underwater accessibility to this component. Because of these limitations on access to the reactor vessel, several steps have been incorporated into the design and manufacturing procedures in preparation for the periodic nondestructive tests which are required by the ASME inservice inspection code. These are:

a. Shop ultrasonic examinations are performed on all internally clad surfaces to an acceptance and repair standard to assure an adequate cladding bond to allow later ultrasonic testing of the base metal from inside surface. The size of cladding bonding defect allowed is 1/4-inch by 3/4-inch in the region bounded by 2T (T = wall thickness) on both sides of each full penetration pressure boundary weld. Unbounded areas exceeding 0.442 in^2 (3/4-inch diameter) in all other regions are rejected.

b. The design of the reactor vessel shell is a clean, uncluttered cylindrical surface to permit future positioning of the test equipment without obstruction.

c. The weld deposited cladding surface on both sides of the welds to be inspected is specifically prepared to ensure meaningful ultrasonic examinations.

d. During fabrication, all full penetration pressure boundary welds are ultrasonically examined in addition to Code examinations.

e. After the shop hydrostatic testing, selected areas of the reactor vessel are ultrasonically tested and mapped to facilitate the inservice inspection program.

The vessel design and construction enables inspection in accordance with ASME Section XI.

5.3.4 References

1. Calculation Note CN-AMLRS-10-7, "Braidwood Units 1 and 2 Measurement Uncertainty Recapture (MUR) Uprate: Reactor Vessel Integrity Evaluations."

2. Calculation Note CN-AMLRS-10-8, "Byron Units 1 and 2 Measurement Uncertainty Recapture (MUR) Uprate: Reactor Vessel Integrity Evaluations."

3. Braidwood Pressure and Temperature Limits Reports (PTLRs) for Units 1 and 2.

4. Byron Pressure and Temperature Limits Reports (PTLRs) for Units 1 and 2.

5. Schmittroth, E.A., "FERRET Data Analysis Code", HEDL-TME-79-40, Hanford Engineering Development Laboratory, Richland, Washington, September 1979.

6. RSIC Data Library Collection DLC-178, "SNLRML Recommended Dosimetry Cross-Section Compendium", July 1994.

7. Regulatory Guide 1.190, "Calculational and Dosimetry Methods for Determining Pressure Vessel Neutron Fluence," United States Nuclear Regulatory Commission, Office of Nuclear Regulatory Research, March 2001.

8. Andrachek, J.D., "Methodology Used to Develop Cold Overpressure Mitigating System Setpoints and RCS Heatup and Cooldown Limit Curves", WCAP-14040-A, Revision 4, May 2004.

9. Babcock & Wilcox Report No. 77-1159832-00, "Pressurized Thermal Shock Evaluation in Accordance with 10 CFR 50.61 for the Reactor Vessels in Byron Units 1 and 2 and Braidwood Units 1 and 2", dated January 13, 1986.

TABLE 5.3-1

REACTOR VESSEL NONDESTRUCTIVE EXAMINATION DURING FABRICATION

	RT*	UT*	PT*	MT*
Forgings				
1. Flanges		yes		yes
2. Studs, nuts		yes		yes
3. Head adapters		yes	yes	
4. Head adapter tube		yes	yes	
5. Instrumentation tube		yes	yes	
6. Main nozzles		yes		yes
7. Nozzle safe ends		yes	yes	
Plates		yes		yes
Weldments				
1. Main seam	yes	yes		yes
2. CRDM head adapter tube assembly to RPV			yes	
3. Instrumentation tube connection			yes	
4. Main nozzle	yes	yes		yes
5. Cladding		yes	yes	
6. Nozzle safe ends (if forging)	yes	yes	yes	
7. Nozzle safe ends (if weld deposit)	yes	yes	yes	
8. Head adapter forging to head adapter tube	yes		yes	
9. All ferritic welds accessible after hydrotest		yes		yes

TABLE 5.3-1 (Cont'd)

	RT	UT	PT	MT
10. Certain non-ferritic welds accessible after hydrotest		yes	yes	
11. Seal ledge				yes
12. Head lift lugs				yes
13. Core pad welds			yes	

*Key:

RT - Radiographic,

UT - Ultrasonic,

PT - Dye penetrant, and

MT - Magnetic particle.

TABLE 5.3-2

REACTOR VESSEL DESIGN PARAMETERS

Design/operating pressure, psig	2485/2317
Design temperature, °F	650
Overall height of vessel and closure head, ft-in (bottom head outside diameter to top of control rod mechanism adapter)	43-10
Thickness of insulation, minimum, in.	3
Number of reactor closure head/studs	54 (Note 1)
Diameter of reactor closure head/studs, in. (minimum shank)	6-3/4
Inside diameter of flange, in.	167
Outside diameter of flange, in.	205
Inside diameter at shell, in.	173
Inlet nozzle inside diameter, in.	27-1/2
Outlet nozzle inside diameter, in.	29
Cladding thickness, minimum, in.	1/8
Lower head thickness, minimum, in.	5-3/8
Vessel belt-line thickness, minimum, in.	8-1/2
Closure head thickness, in.	6-1/2

Note 1- Operation with 53 studs is acceptable for Byron Unit 2 and Braidwood Unit 2. Analyses show that the structural integrity of the Reactor Vessel and all of the stress intensity and fatigue usage factor limits of the ASME Code, Section III, 1971 Edition with Addenda through Summer 1973, are satisfied with one (1) stud out of service. Analyses have also been performed for Byron Unit 1 and Braidwood Unit 1 to justify operation with 53 studs. However, such operation has only been implemented for Byron Unit 2 and Braidwood Unit 2.

TABLE 5.3-3a

BYRON UNIT 1 CLOSURE HEAD BOLTING MATERIAL PROPERTIES

CLOSURE HEAD STUDS

Heat No.	Grade	Bar No.	0.2% YS KSI	UTS KSI	Elong. %	RA %	BHN	Energy at 4°F FT-LBS	Lat. Expansion MILS
521190	A540, B23	2B1	130.3	150.8	18.0	60.8	341	55-55-54.5	33-30-33
521190	A540, B23	2B1	133.3	150.8	17.0	55.7	375	46-48-48.5	26-29-29
521190	A540, B23	1B5	133.4	152.1	17.5	57.7	363	45-48-45	26-29-26
521190	A540, B23	1B5	140.2	158.6	16.5	55.0	375	46-47-46.5	26-27-26
521187	A540, B23	1B5	139.2	156.1	17.0	56.9	363	61-61-62	33-34-36
521187	A540, B23	1B5	150.2	166.6	15.0	55.9	375	52-50-50	29-29-29
521187	A540, B23	2B5	144.8	160.8	15.5	57.8	341	59.5-60-59.5	33-32-32
521187	A540, B23	2B5	153.0	168.8	15.0	54.6	363	47-48.5-48	26-30-28
719731	A540, B23	B5	132.8	150.4	17.5	59.4	331	66.5-55-66.5	44-44-44
719731	A540, B23	B5	139.0	156.6	17.0	58.5	363	52.5-53-54	31-31-33
521195	A540, B23	B5	132.3	156.3	17.0	54.9	352	56-53.5-56	32-33-31
521195	A540, B23	B5	141.4	161.9	16.0	54.8	375	45-46-45.5	25-26-26
719673	A540, B23	B4	131.3	151.4	17.0	59.4	331	68-66.5-67.5	43-44-45
719673	A540, B23	B4	134.8	156.6	16.0	57.4	363	53-53.5-52.5	32-33-33
CLOSURE HEAD NUTS & WASHERS									
6071004	A540, B23	3153A	142.5	161.1	17.9	56.0	341	55-54-52	29-28-28
6071004	A540, B23	3153B	137.5	156.5	19.3	47.2	341	49-50-49	25-26-31

TABLE 5.3-3b

BRAIDWOOD UNIT 1 CLOSURE HEAD BOLTING MATERIAL PROPERTIES

CLOSURE HEAD STUDS

Heat No.	Grade	Bar No.	0.2% YS KSI	UTS KSI	Elong. %	RA %	BHN	Energy at 4°F FT-LBS	Lat. Expansion MILS
6053761	A540, B23	1A	138.0	152.5	17.0	54.7	331	52, 54, 54	28, 28, 30
6053761	A540, B23	1B	140.0	153.5	18.0	56.5	352	52, 53, 54	31, 26, 29
6053761	A540, B23	2A	137.0	153.0	18.0	54.7	331	56, 49, 57	43, 37, 37
6053761	A540, B23	2B	141.5	156.0	17.0	54.1	352	54, 54, 55	42, 37, 39
6053761	A540, B23	3A	142.5	159.0	16.0	52.5	331	46, 48, 48	28, 27, 28
6053761	A540, B23	3B	137.0	152.5	16.0	54.9	363	49, 48, 50	26, 25, 25
6053761	A540, B23	4A	144.0	160.0	16.0	50.0	331	51, 48, 50	36, 32, 32
6053761	A540, B23	4B	152.0	165.0	15.0	49.2	363	46, 47, 47	28, 27, 28
6053761	A540, B23	5A	140.0	156.0	17.0	50.0	321	48, 52, 54	33, 35, 38
6053761	A540, B23	5B	148.0	162.5	17.0	52.5	363	52, 46, 48	33, 31, 26
6053761	A540, B23	6A	145.0	159.5	18.0	55.5	321	49, 50, 50	31, 32, 29
6053761	A540, B23	6B	146.5	160.0	15.0	58.6	363	49, 51, 51	26, 35, 33
6053761	A540, B23	7A	140.0	155.0	18.0	56.5	341	55, 52, 51	32, 30, 25
6053761	A540, B23	7B	149.5	164.0	16.0	52.8	363	48, 48, 46	28, 32, 27
6053761	A540, B23	8A	143.0	157.5	17.0	56.8	341	45, 50, 47	28, 32, 26
6053761	A540, B23	8B	146.0	161.5	16.0	52.8	363	47, 47, 46	28, 27, 26
214444	A540, B23	1A	142.0	157.5	16.0	56.5	321	52, 53, 53	34, 37, 34
214444	A540, B23	1B	146.0	162.5	15.5	53.3	363	45, 49, 47	25, 31, 25
214444	A540, B23	2A	139.5	153.5	17.0	57.3	321	51, 53, 55	35, 34, 33
214444	A540, B23	2B	136.0	153.0	16.0	53.3	363	50, 48, 47	28, 29, 26
CLOSURE HEAD NUTS									
43135	A540, B23	1A	146.9	161.2	18.1	55.1	341	50, 55, 58	38, 40, 42
43135	A540, B23	1B	146.8	163.8	19.9	57.4	341	53, 54, 52	40, 40, 38
CLOSURE HEAD WASHERS									
43135	A540, B23	1A	157.1	169.4	19.5	55.1	363	50, 51, 50	33, 40, 40
43135	A540, B23	1B	148.0	162.5	19.5	56.3	363	50, 45, 45	28, 25, 36

TABLES 5.3-4 THROUGH TABLE 5.3-6 HAVE BEEN DELETED

TABLE 5.3-7

BYRON UNIT 1 PRESSURIZED THERMAL

SHOCK EVALUATION

MATERIAL DESCRIPTION REACTOR VESSEL BELTLINE REGION LOCATION	HEAT/WELD SEAM NUMBER	TYPE	CHEMICAL COMPOSITION, wt.% COPPER	NICKEL	CONSTANTS FOR RT_{PTS} CALCULATIONS, (°F) INITIAL RT_{NDT}	MARGIN	INSIDE SURFACE FLUENCE (n/cm^2) 32 EFPY	PTS SCREENING CRITERIA (°F)	CALCULATED RT_{PTS} (°F) 32 EFPY
Nozzle Shell	123J218	SA 508 C1 2 mod.	.05	.72	+30	26.5	5.98E18	270	83
Intermediate Shell	5P-5933	SA 508 C1 2 mod.	.04	.74	+40	34	1.77E19	270	109
Lower Shell	5P-5951	SA 508 C1 2 mod.	.04	.64	+10	30.1	1.77E19	270	70
Upper Circumferential Weld	WF501	ASA/Linde 80	.03	.67	+10	22.3	5.98E18	300	55
Middle Circumferential Weld	WF336	ASA/Linde 80	.04	.63	-30	28	1.72E19	300	74
Lower Circumferential Weld	WF472	ASA/Linde 80	.23	.57	+10	--	<E17	300	--

TABLE 5.3-8

BYRON UNIT 2 PRESSURIZED THERMAL

SHOCK EVALUATION

MATERIAL DESCRIPTION REACTOR VESSEL BELTLINE REGION LOCATION	HEAT/WELD SEAM NUMBER	TYPE	CHEMICAL COMPOSITION, wt.% COPPER	NICKEL	CONSTANTS FOR RT_{PTS} CALCULATIONS, (°F) INITIAL RT_{NDT}	MARGIN	INSIDE SURFACE FLUENCE (n/cm^2) 32 EFPY	PTS SCREENING CRITERIA (°F)	CALCULATED RT_{PTS} (°F) 32 EFPY
Nozzle Shell	4P-6107	SA 508 C1 2 mod.	.05	.74	+10	25.8	5.49E18	270	62
Intermediate Shell	49D329-1-1 49C297-1-1	SA 508 C1 3	.01	.70	-20	23.1	1.76E19	270	26
Lower Shell	49D330-1-1 49C298-1-1	SA 508 C1 3	.06	.73	-20	17	1.76E19	270	19
Upper Circumferential Weld	WF562	ASA/Linde 80	.03	.67	+40	21.7	5.49E18	300	83
Middle Circumferential Weld	WF447	ASA/Linde 80	.04	.63	+10	28	1.70E19	300	114
Lower Circumferential Weld	WF614	ASA/Linde 80	.18	.54	+40	--	<E17	300	--

TABLE 5.3-9

BRAIDWOOD UNIT 1 PRESSURIZED THERMAL

SHOCK EVALUATION

MATERIAL DESCRIPTION REACTOR VESSEL BELTLINE REGION LOCATION	HEAT/WELD SEAM NUMBER	TYPE	CHEMICAL COMPOSITION, wt.% COPPER	NICKEL	CONSTANTS FOR RT_{PTS} CALCULATIONS, (°F) INITIAL RT_{NDT}	MARGIN	INSIDE SURFACE FLUENCE (n/cm^2) 32 EFPY	PTS SCREENING CRITERIA (°F)	CALCULATED RT_{PTS} (°F) 32 EFPY
Nozzle Shell	5P-7016	SA 508 C1 2 mod.	.04	.73	+10	22.1	5.86E18	270	54
Intermediate Shell	49C344-1-1 49D383-1-1	SA 508 C1 3	.05	.73	-30	34	1.76E19	270	40
Lower Shell	49D867-1-1 49C813-1-1	SA 508 C1 3	.05	.74	-20	17	1.76E19	270	25
Upper Circumferential Weld	WF645	ASA/Linde 80	.04	.46	-25	45.9	5.86E18	300	67
Middle Circumferential Weld	WF562	ASA/Linde 80	.03	.67	+40	28	1.70E19	300	98
Lower Circumferential Weld	WF653	ASA/Linde 80	.19	.58	-40	--	<E17	300	--

TABLE 5.3-10

BRAIDWOOD UNIT 2 PRESSURIZED THERMAL

SHOCK EVALUATION

MATERIAL DESCRIPTION REACTOR VESSEL BELTLINE REGION LOCATION	HEAT/WELD SEAM NUMBER	TYPE	CHEMICAL COMPOSITION, wt.% COPPER	NICKEL	CONSTANTS FOR RT_{PTS} CALCULATIONS, (°F) INITIAL RT_{NDT}	MARGIN	INSIDE SURFACE FLUENCE (n/cm^2) 32 EFPY	PTS SCREENING CRITERIA (°F)	CALCULATED RT_{PTS} (°F) 32 EFPY
Nozzle Shell	5P-7056	SA 508 C1 2 mod.	.04	.90	+30	21.8	5.59E18	270	74
Intermediate Shell	49D963-1-1 49C904-1-1	SA 508 C1 3	.03	.71	-30	23.0	1.73E19	270	16
Lower Shell	50D102-1-1 50C97-1-1	SA 508 C1 3	.06	.76	-30	34	1.73E19	270	47
Upper Circumferential Weld	WF645	ASA/Linde 80	.04	.46	-25	45.2	5.59E18	300	65
Middle Circumferential Weld	WF562	ASA/Linde 80	.03	.67	+40	28	1.67E19	300	98
Lower Circumferential Weld	WF696	ASA/Linde 80	.04	.60	-10	--	<E17	300	--

5.4 COMPONENT AND SUBSYSTEM DESIGN

5.4.1 Reactor Coolant Pumps

5.4.1.1 General

The reactor coolant pump ensures an adequate core cooling flow rate for sufficient heat transfer, to maintain a departure from nucleate boiling ratio (DNBR) greater than 1.3 within the parameters of operation. The required net positive suction head is by conservative pump design always less than that available by system design and operation.

Sufficient pump rotation inertia is provided by a flywheel, in conjunction with the impeller and motor assembly, to provide adequate flow during coastdown. This forced flow following an assumed loss of pump power and the subsequent natural circulation effect provide the core with adequate cooling.

The reactor coolant pump motor was tested, without mechanical damage, at overspeeds up to and including 125% of normal speed. The integrity of the flywheel during a LOCA is demonstrated in Reference 1.

The reactor coolant pump is shown in Figure 5.4-1. The reactor coolant pump design parameters are given in Table 5.4-1.

Code and material requirements are provided in Section 5.2.

5.4.1.2 Design Description

The reactor coolant pump is a vertical, single stage, centrifugal, shaft seal pump designed to pump large volumes of reactor coolant at high temperatures and pressures.

The pump consists of three areas from bottom to top. They are the hydraulics, the shaft seals, and the motor.

a. The hydraulic section consists of an impeller, diffuser, casing, thermal barrier, heat exchanger, lower radial bearing, main flange, motor stand, and pump shaft.

b. The shaft seal section consists of three devices. They are the number 1 controlled leakage, film riding face seal and the number 2 and number 3 rubbing face seals. These seals are contained within the main flange and seal housing.

c. The motor section consists of a vertical solid shaft, squirrel cage induction type motor, an oil lubricated double Kingsbury type thrust bearing, two coil lubricated radial bearings, and a flywheel.

Attached to the bottom of the pump shaft is the impeller. The reactor coolant is drawn up through the impeller, discharged through passages in the diffuser, and out through the discharge nozzle in the side of the casing. Above the impeller is a thermal barrier heat exchanger. Component cooling water is supplied to the thermal barrier heat exchanger. Safety grade indication is provided to inform the operator of the loss component cooling water to the pump assembly.

High-pressure seal injection water is introduced through a connection on the thermal barrier flange. A portion of this water flows through the radial bearing and the seals; the remainder flows down the shaft through the thermal barrier where it acts as a buffer to prevent system water from entering the radial bearing and seal section of the unit. The thermal barrier heat exchanger provides a means of cooling system water to an acceptable level in the event that seal injection flow is lost. The water lubricated journal-type pump bearing, mounted above the thermal barrier heat exchanger, has a self-aligning spherical seat.

The reactor coolant pump motor bearings are of conventional design. The radial bearings are the segmented pad type and the thrust bearings are tilting pad Kingsbury bearings. All are oil lubricated. The lower radial bearing is oil fed from an impeller integral with the thrust runner. Component cooling water is supplied to the two oil coolers on the pump motor, and loss of component cooling water flow is indicated by safety grade indicators.

The motor is an air cooled, Class B (or F at Byron only) Thermalastic Epoxy insulated, squirrel cage induction motor. The rotor and stator are of standard construction and are cooled by air. Six resistance temperature detectors are located throughout the stator to sense the winding temperature. The top of the motor consists of a flywheel and an antireverse rotation device.

Each of the reactor coolant pumps is equipped for monitoring of frame vibration levels. Frame vibration is measured by two vibration pickups mounted at the top of the motor support stand; the two pickups are mounted in the same horizontal plane and are aligned parallel and perpendicular to the pump discharge. Signals from all the reactor coolant pumps are sent to a multipoint selector switch mounted outside the reactor containment, in the auxiliary electric room.

The signals may be read on a vibration meter which shows either displacement and/or velocity. Frame and shaft vibration levels are checked during performance testing prior to shipment.

An additional vibration monitoring system is installed that is capable of performing continuous on-line

vibration monitoring of each reactor coolant pump. This system a) provides local indication of reactor coolant pump shaft vibration levels, and b) at Byron, gathers and stores the necessary data to perform diagnostic functions for tracking, trending, and manipulating this data. The system provides vibration indication only and does not provide any protection or alarming functions.

A removable shaft segment, the spool piece, is located between the motor coupling flange and the pump coupling flange; the spool piece allows removal of the pump seals with the motor in place. The pump internals, motor and motor stand, can be

removed from the casing without disturbing the reactor coolant piping. The flywheel is available for inspection by removing the flywheel cover.

All parts of the pump in contact with the reactor coolant are austenitic stainless steel except for seals, bearings, and special parts.

5.4.1.3 Design Evaluation

5.4.1.3.1 Pump Performance

The reactor coolant pumps are sized to deliver flow at rates which equal or exceed the required flow rates. Initial reactor coolant system tests confirm the total delivery capability. Thus, assurance of adequate forced circulation coolant flow is provided prior to initial plant operation.

The performance characteristic, shown in Figure 5.4-2, is typical of fixed speed mixed flow pumps; the "knee" at about 45% design flow introduces no operational restrictions, since the pumps operate at full flow.

The reactor trip system ensures that pump operation is within the assumptions used for loss-of-coolant flow analyses, i.e., adequate core cooling, if flow from a reactor coolant pump is lost during operation.

An extensive test program has been conducted for several years to develop the controlled leakage shaft seal for pressurized water reactor applications. Long-term tests were conducted on less than full scale prototype seals as well as on full size seals.

The support of the stationary member of the number 1 seal ("seal ring") is such as to allow large deflections, both axial and tilting, while still maintaining its controlled gap relative to the seal runner. Even if all the graphite were removed from the pump bearing, the shaft could not deflect far enough to cause opening of the controlled leakage gap. The "spring-rate" of the hydraulic forces associated with the maintenance of the gap is high enough to ensure that the ring follows the runner under very rapid shaft deflections.

Testing of pumps with the number 1 seal entirely removed (full system pressure on the number 2 seal) shows that relatively small leakage rates would be maintained for long periods of time; (with the pump not rotating); even if the number 1 seal fails entirely during normal operation the number 2 seal would maintain these small leakage rates if the proper action is taken by the operator. The plant operator is warned of number 1 seal damage by the increase in number 1 seal leakoff. Following warning of excessive seal leakage conditions, the plant operator should close the number 1 seal leakoff line and

secure the pump, if conditions warrant as specified in the instruction manual. Gross leakage from the pump does not occur if the proper operator action is taken subsequent to warning of excessive seal leakage conditions.

Loss of offsite power results in pump trip, with loss of seal injection flow, and component cooling water. The emergency diesel-generators start automatically on loss of offsite power and component cooling flow is automatically restored; seal injection flow is subsequently restored.

5.4.1.3.2 Coastdown Capability

It is important to reactor protection that the reactor coolant continues to flow for a short time after reactor trip. In order to provide this flow in a loss of nonemergency a-c power condition, each reactor coolant pump is provided with a flywheel. Thus, the rotating inertia of the pump, motor and flywheel is employed during the coastdown period to continue the reactor coolant flow. The coastdown flow transients are provided in the figures in Section 15.3. The pump/motor system is designed for the safe shutdown earthquake at the site. Hence, it is concluded that the coastdown capability of the pumps is maintained even under the most adverse case of a loss of nonemergency a-c power coincident with the safe shutdown earthquake. Core flow transients and figures are provided in Section 15.3.

5.4.1.3.3 Bearing Integrity

The design requirements for the reactor coolant pump bearings are primarily aimed at ensuring a long life with negligible wear, so as to give accurate alignment and smooth operation over long periods of time. These surface-bearing stresses are held at a very low value, and even under the most severe seismic transients do not begin to approach loads which cannot be adequately carried for short periods of time.

Because there are no established criteria for short time stress-related failures in such bearings, it is not possible to make a meaningful quantification of such parameters as margins to failure, safety factors, etc. A qualitative analysis of the bearing design, embodying such considerations, gives assurance of the adequacy of the bearing to operate without failure.

Low oil level will alarm in the control room. Motor bearing temperature will be monitored using imbedded temperature detectors, for high bearing temperature. Assuming the bearing proceeds to failure, the low melting point of Babbitt metal on the pad surfaces ensures that sudden seizure of the shaft will not occur. In this event the motor continues to operate, as it has sufficient reserve capacity to drive the pump under such conditions. However, the high torque required to drive the pump will require high current which will lead to the motor being shut down by the electrical protection systems.

5.4.1.3.4 Locked Rotor or Loss of CCW

It may be hypothesized that the pump impeller might severely rub on a stationary member and then seize. Analysis has shown that under such conditions, assuming instantaneous seizure of the impeller, the pump shaft fails in torsion just below the coupling to the motor, disengaging the flywheel and motor from the shaft. This constitutes a loss-of-coolant flow in the loop. Following such a postulated seizure, the flywheel maintains its integrity, as it is still supported on a shaft with two bearings. Flow transients are provided in the figures in Subsection 15.3.4 for the assumed locked rotor.

There are no other credible sources of shaft seizure other than impeller rubs. A sudden seizure of the pump bearing is precluded by graphite in the bearing. Any seizure in the seals results in a shearing of the antirotation pin in the seal ring. The motor has adequate power to continue pump operation even after the above occurrences. Indications of pump malfunction in these conditions are initially by high temperature signals from the bearing water temperature detector, and excessive number 1 seal leakoff indications, respectively. Following these signals, pump vibration levels are checked. Excessive vibration indicates mechanical trouble and the pump is shut down for investigation.

An analysis of the locked rotor event is discussed in Subsection 15.3.3 and it is assumed that there is an instantaneous seizure of an RCP rotor due to an impeller rubbing on a stationary member. Component cooling water is provided to the reactor coolant pump thermal barrier heat exchanger and the pump motor oil coolers. The component cooling water system (CCWS) description and design bases are discussed in Subsection 9.2.2. A mechanical instantaneous seizure of a pump rotor due to loss of CCW to the RCP is not a credible event. If a limiting condition of the babbit metal is considered, an increasing coefficient of friction as well as an increasing retarding torque is expected. However, in view of the large rotational inertia of the pump/motor assembly, a more credible consequence would be an abbreviated coastdown.

Considerable data is available to the operator to indicate loss of CCW to the RCP.

Westinghouse has conducted a human engineering analysis of this event during normal operation, considering the following factors:

a. Low CCW flow alarms for the CCWS return line from each reactor coolant pump oil cooler are located on the main control board.

b. A high CCW temperature alarm for the common return line from the reactor coolant pump oil coolers is located on the main control board.

c. The reactor coolant pump motor bearing temperature is supplied as input to the process computer. A high temperature will cause the computer to alarm and identify the following high temperatures:

   1. RCP motor stator winding temperature,

   2. RCP motor upper radial bearing temperature,

   3. RCP motor upper thrust bearing temperature,

   4. RCP motor lower radial bearing temperature, and,

   5. RCP motor lower thrust bearing temperature.

d. The CCWS isolation valves monitoring lights, which would indicate valve closure, are located on the main control panel.

e. The psychological stress induced on the average trained operator is much less than that induced by LOCA (reference Wash-1400), which would cause a response time delay of one minute.

f. The response required by the operator to trip the reactor and stop the reactor coolant pumps is not complicated and is a direct logical result of the event symptoms as alarmed and indicated.

In view of these factors, 10 minutes is a conservative and appropriate operator response time for this event during normal operation.

Should a loss of component cooling water to the reactor coolant pumps occur, the chemical and volume control system continues to provide seal injection water to the reactor coolant pumps; the seal injection flow is sufficient to prevent damage to the seals with a loss of thermal barrier cooling. The loss of component cooling water to the motor bearing oil coolers will result in an increase of lube oil temperature and a corresponding rise in bearing metal temperature. Testing performed by Westinghouse has shown that the manufacturer's recommended maximum bearing operating temperature will be reached in approximately 10 minutes. Therefore, the reactor coolant pumps will incur no damage with a component cooling water flow interruption of 10 minutes.

Two RCP motors have been tested with interrupted CCW flow at the Westinghouse Electro Mechanical Division. In both cases, the reactor coolant pumps were operated to achieve "hot" (2230

psia, 552°F) equilibrium conditions. After the bearing temperatures stabilized, the cooling water flow to the upper and lower bearing oil coolers was terminated and bearing (upper thrust, lower thrust, upper guide and lower guide) temperatures was monitored. A bearing metal temperature of 185°F was established as the maximum test temperature. When that temperature was reached, the cooling water flow was restored.

In both tests, the upper thrust bearing exhibited the limiting temperatures. The upper thrust bearing temperature, in both cases, reached 185°F in approximately 10 minutes.

The maximum test temperature of 185°F is also the suggested alarm setpoint temperature and the suggested trip temperature is 195°F. It should be noted that the melting point of the babbit bearing metal exceeds 400°F.

The information presented above constitutes the basis of the RCP qualification for 10-minute operation without CCW with no resultant damage.

In summary, the testing performed by Westinghouse has demonstrated that the reactor coolant pumps are capable of operating for a 10-minute component cooling water flow interruption to the oil coolers without damage to the pumps and that a 10-minute operator response time for this event during normal operation is appropriate and conservative. Thus, the design is capable of withstanding a loss of CCW.

5.4.1.3.5 Critical Speed

The reactor coolant pump shaft is designed so that its operating speed is below its first critical speed. This shaft design, even under the most severe postulated transient, gives low values of actual stress.

5.4.1.3.6 Missile Generation

Precautionary measures taken to preclude missile formation from primary coolant pump components ensure that the pumps will not produce missiles under any anticipated accident condition. Each component of the primary pump motors has been analyzed for missile generation. Any fragments of the motor rotor would be contained by the heavy stator. The same conclusion applies to the pump impeller because the small fragments that might be ejected would be contained by the heavy casing. Further discussion and analysis of missile generation is contained in Reference 1.

5.4.1.3.7 Pump Cavitation

The minimum net positive suction head required by the reactor coolant pump at running speed is approximately a 192 foot head (approximately 85 psi). In order for the controlled leakage

seal to operate correctly it is necessary to require a minimum differential pressure of approximately 200 psi across the seal. This corresponds to a primary loop pressure at which the net positive suction head requirement is exceeded and no limitation on pump operation occurs from this source.

5.4.1.3.8 Pump Overspeed Considerations

For turbine trips actuated by either the reactor trip system or the turbine protection system, the generator is maintained connected to the external network for 30 seconds to prevent any reactor coolant pump overspeed condition.

An electrical fault requiring immediate trip of the generator (with resulting turbine trip) could result in an overspeed condition. However, the turbine control system and the turbine intercept valves limit the overspeed to less than 120%. In case a generator trip deenergizes the pump buses, the reactor coolant pump motors will be transferred to offsite power within 6 to 10 cycles. Further discussion of pump overspeed considerations is contained in Reference 1.

5.4.1.3.9 Antireverse Rotation Device

Each of the reactor coolant pumps is provided with an anti reverse rotation device in the motor. This antireverse mechanism consists of pawls mounted on the outside diameter of the flywheel, a serrated ratchet plate mounted on the motor frame, a spring return for the ratchet plate, and three shock absorbers.

After the motor has slowed and come to a stop, the dropped pawls engage the ratchet plate and, as the motor tends to rotate in the opposite direction, the ratchet plate also rotates until it is stopped by the shock absorbers. The rotor remains in this position until the motor is energized again. When the motor is started, the ratchet plate is returned to its original position by the spring return.

As the motor begins to rotate, the pawls drag over the ratchet plate. When the motor reaches sufficient speed, the pawls are bounced into an elevated position and are held in that position by friction resulting from centrifugal forces acting upon the pawls. Considerable plant experience with the design of these pawls has shown high reliability of operation.

5.4.1.3.10 Shaft Seal Leakage

Leakage along the reactor coolant pump shaft is controlled by three shaft seals arranged in series such that reactor coolant leakage to the containment is essentially zero. Approximately 8 gpm charging flow is directed to each reactor coolant pump

via a seal water injection filter. It enters the pumps through a connection on the thermal barrier flange and is directed down to a point between the pump shaft bearing and the thermal barrier cooling coils. Here the flow splits. A portion flows down through the thermal barrier labyrinth, past the cooling coils, and into the reactor coolant system. The remainder flows through the lower shaft bearing assembly, cooling and lubricating the bearing surfaces, and up the shaft annulus; this flow enters the number 1 seal. Above the number 1 seal most of the flow leaves the pump via the number 1 seal discharge line. Minor flow passes through the number 2 seal and discharge line. A back flush injection of 800 cc/hour from a head tank flows into the number 3 seal between its "double dam" seal area. At this point the flow divides with half flushing through one side of the seal and out the number 2 seal leakoff while the remaining half flushes through the other side and out the number 3 seal leakoff. This arrangement ensures essentially zero leakage of reactor coolant or trapped gases from the pump.

Reactor coolant pump seal degradation and abnormal seal leakage is precluded by a combination of shaft seal system design operating instructions/limitations and seal monitoring instrumentation.

Leakage along the reactor coolant pump shaft is controlled by three shaft seals arranged in series such that leakage to the containment is essentially zero. A more detailed description of each of the seals is provided below.

The number 1 seal, the main seal of the pump, is a controlled-leakage, film-riding face seal. Its primary components are a runner which rotates with the shaft and a nonrotating seal ring attached to the seal housing. The ring and the runner each have a faceplate clamped to a Type 410 SST holder. The flow path is formed between the interfaces of the seal ring and seal runner. The face separation depends upon seal geometry and pressure distribution.

The number 2 seal is a rubbing-face type of seal consisting of a carbon insert which is shrunk into a stainless steel seal ring. The carbon insert rubs on a coated plate on a Type 304 SST runner which rotates with the shaft. This seal directs the leakage from the number 1 seal into the volume control tank.

The number 3 seal is a rubbing-face type of seal consisting of a carbon insert which is shrunk into a stainless steel seal ring. The carbon insert has two sealing faces called dams. These dams rub on a coated surface on a stainless steel runner which rotates with the shaft. Clean water is injected between the two dams of the seal ring at a pressure greater than that in the number 2 seal leakoff cavity. Two leakage paths are thus provided for this injected

water. Part of the injected water flows past the outer dam where it joins the leakage from the number 2 seal and passes out of the pump through the number 2 seal leakoff connection. The remainder of the injected water flows past the inner dam and is diverted to flow out through the number 3 seal leakoff connection.

The seal leakoff connections for the RCP are shown in Drawings M-64 and M-64A. Subsection 9.3.4.1.2.1 discusses the various RCP seal leakoff paths.

The number 1 and 2 seals are designed as the pressure barrier seals to minimize leakage. The number 1 seal is designed to function satisfactorily under a normal ΔP of 2235 psig with a maximum and minimum ΔP of 2470 psig and 200 psig, respectively. Should the number 1 seal become inoperative, the number 2 seal is designed to accommodate full RCS pressure of approximately 2235 psig. These design conditions have been verified by an extensive test program to develop the controlled leakage shaft seal system. Testing of pumps with the number 1 seal bypassed (full RCS pressure on the number 2 seal) shows that relatively small leakage rates will be maintained. These design provisions provide a shaft seal system that is not conducive to rapid degradation and increase in seal leakage as long as the reactor coolant pump is operated such that important seal system parameters are within the recommended limitations.

The plant operator is provided with operating instructions/ limitations which will ensure proper reactor coolant pump operation. Reactor coolant pump seal system monitoring instrumentation is provided to permit monitoring of seal performance and early detection of abnormal seal system operation. Failure of the number 1 seal on an RCP will result in excessive flow being directed to the CVCS. The seal water return line from each RCP is provided with flow rate indication and alarms at the main control board (MCB). The high alarm setpoint is conservatively set to ensure compliance with the vendor's recommendations for operation of the pump within the normal expected range of seal leakoff flow.

Failure at the number 1 seal on a RCP also results in increased flow from the RCP number 2 seal being directed to the reactor coolant drain tank (RCDT) in the waste processing system (WPS). The leakoff path from each RCP number 2 seal to the RCDT is provided with flow rate indication and alarms at the MCB. The RCDT liquid level monitoring equipment will also provide the operator with information about the RCP number 2 seal leakoff flow rate.

Thus, indication and alarms for number 1 and number 2 seal leakoff flow; number 1 seal differential pressure and number 1 seal temperature will alert the plant operator to a deteriorating seal as soon as the operating parameters exceed the bounds for acceptable pump operation.

Operating instructions/limitations in conjunction with seal monitoring instrumentation permit the plant operator to not only detect a deteriorating seal but also to operate the reactor coolant pump (i.e., starting and stopping) such that key seal system parameters remain within the bounds for acceptable pump operation. As long as the pumps are operated in compliance with the operating instructions/limitations, rapid seal degradation and significant seal leakage should not be experienced. The following limitations are intended to address conditions which are considered to have contributed to reactor coolant pump seal failure:

a. The reactor coolant pump should not be started unless minimum number 1 seal ΔP and leakoff flow parameters are satisfied. Starting the reactor coolant pump with inadequate number 1 seal ΔP and leakoff flow could lead to rubbing of the number 1 seal ring and runner, with subsequent debris generation. Debris generated by such operation could consequently damage the number 2 seal, leading to increased seal leakage.

b. During operation, the failure of number 1 seal with the RCS pressure drop occurring across the number 2 seal should lead to stopping the pump within 5 minutes. The number 1 seal leakoff valve should be closed after the pump stops. The pump should not be restarted until the cause of the number 1 seal failure has been determined.

c. Following loss of seal injection flow, a stopped reactor coolant pump should not be started unless the seals have been verified to be clear of any crud blockage which may be accumulated in the seal area when injection flow was stopped. Verification of proper seal performance parameters (e.g., adequate number 1 seal leakoff flow and ΔP) should be accomplished before any pump restart.

d. During the plant startup from a cold condition to minimum load, the operator will initiate plant heatup and continue the process in accordance with the heatup pressure-temperature relationship defined in the Pressure Temperature Limits Report (PTLR). The RCP operating instructions indicate that the bypassline is to be closed at the time when flow through the number 1 seal is sufficient to provide bearing cooling. Although not recommended, continued pump operation with the seal bypass line open will not result in seal damage since reactor coolant will flow up the shaft, if permitted by the prevailing hydraulic conditions, to augment seal injection

flow. Reactor coolant flow up the shaft will be cooled by the component cooling water to the thermal barrier heat exchanger.

e. During plant shutdown operations with low RCS pressure, the potential exists for reverse flow in the number 1 seal leakoff line into the number 1 seal chamber. This reverse flow may flush debris off the seal return filter into the number 1 seal. Such a condition should be precluded by isolation of the number 1 seal bypass and leakoff lines when RCS pressure is reduced to less than 100 psig.

Operating instructions/limitations of this type are provided to maintain the seal area free of crud and to ensure that reactor coolant pumps are started and operated under conditions consistent with safe and reliable operation. Should seal system degradation be detected; the operating instructions/limitations provide for corrective action prior to the development of significant seal leakage.

The combination of pump seal system design, operating instructions/limitations, and instrumentation for monitoring pump performance permit abnormal seal operation to be detected and addressed prior to significant seal leakage developing. Under such conditions, the plant can be taken to cold shutdown conditions using normal plant shutdown systems. Normal plant systems would be capable of taking the plant to cold shutdown as long as reactor coolant pump seal leakage did not exceed approximately 120 gpm.

Although the total failure of the RCP seal is considered unlikely, the consequences of such an event have been evaluated. To evaluate the most severe consequences following a postulated complete failure of the reactor coolant pump shaft seal system, a conservative value for leakage was estimated by assuming that total RCS pressure drop (i.e., 2250 psia) occurs across the thermal barrier labyrinth seals. Based on this assumption, the maximum leakage will be less than 300 gpm. This number is extremely conservative in that it assumes no credit for the damaged shaft seal system. Since such postulated leakage is above approximately 120 gpm, the postulated complete failure of the shaft seal system would constitute a small LOCA. The 300 gpm leakrate at an RCS pressure/temperature condition of 2250 psia/500°F corresponds to a small LOCA with an equivalent break discharge area of 0.5 in^2 assuming a discharge coefficient equal to 1.0. For a break of this size, the RCS will slowly depressurize and a reactor trip and a safety injection signal will be generated. If only one train of safety injection pumps is available (minimum safeguards), the RCS will continue to depressurize until the high-head safety injection flow is capable of matching the liquid phase break flow. The RCS pressure will stabilize at this equilibrium pressure, which will be greater than the secondary side

pressure. If two trains of safety injections pumps are available (best estimate safeguards), the RCS will begin to refill and repressurize subsequent to SI flow delivery. The RCS pressure will rise to a level such that SI termination and throttling will be necessary. For either minimum or best estimate safeguards, the steam generators would not drain for a break of this size and continuous circulation of reactor coolant will be provided by the reactor coolant pumps or by natural circulation, if the reactor coolant pumps had tripped. The reactor core would remain covered and adequately cooled for a break of this size. See Reference 1 for additional information on the equivalent 0.5 in^2 small LOCA.

Although the most severe consequences of a postulated complete failure of a reactor coolant pump seal system could approach the consequences for a small LOCA, such consequences are not anticipated. The combination of seal system design, operating instructions/limitations, and monitoring instrumentation permit detection of abnormal seal operation prior to significant seal degradation and consequential leakage. These design provisions permit the plant to be taken to a cold shutdown condition, if appropriate, through the use of normal plant shutdown systems prior to seal degradation and leakage approaching the limit for this type of plant shutdown operations.

5.4.1.3.11 Seal Discharge Piping

Discharge pressure from the number 1 seal is reduced to that of the volume control tank. Water from each pump number 1 seal is piped to a common manifold, and through the seal water return filter and through the seal water heat exchanger where the temperature is reduced to that of the volume control tank. The number 2 and number 3 leakoff lines dump number 2 and 3 seal leakage to the reactor coolant drain tank and containment sump, respectively.

5.4.1.4 Tests and Inspections

The reactor coolant pumps are inspected in accordance with ASME Section XI, "Rules for Inservice Inspection of Nuclear Power Plant Components."

The pump casing is cast in one piece, eliminating welds in the casing. Support feet are cast integral with the casing to eliminate a weld region.

The design enables disassembly and removal of the pump internals for usual access to the internal surface of the pump casing.

The reactor coolant pump NDE is given in Table 5.4-2.

5.4.1.5 Pump Flywheels

The integrity of the reactor coolant pump flywheel is assured on the bases of the following design and quality assurance procedures.

5.4.1.5.1 Design Bases

The calculated stresses at operating speed are based on stresses due to centrifugal forces. The stress resulting from the interference fit of the flywheel on the shaft is less than 2000 psi at zero speed, but this stress becomes zero at approximately 600 rpm because of radial expansion of the hub. The primary coolant pumps run at approximately 1190 rpm and may operate briefly at overspeeds up to 109% (1295 rpm) during loss of offsite power. For conservatism, however, 125% of operating speed was selected as the design speed for the primary coolant pumps. The flywheels are given a preoperational test of 125% of the maximum synchronous speed of the motor.

5.4.1.5.2 Fabrication and Inspection

The flywheel consists of two thick plates bolted together. The flywheel material is produced by a process that minimizes flaws in the material and improves its fracture toughness properties, such as vacuum degassing, vacuum melting, or electroslag remelting. Each plate is fabricated from A533, Grade B, Class 1 steel. Supplier certification reports are available for all plates and demonstrate the acceptability of the flywheel material.

Flywheel blanks are flame-cut from the A533, Grade B, Class 1 plates with at least 1/2 inch of stock left on the outer and bore radii for machining to final dimensions. The finished machined bores, keyways, and drilled holes are subjected to magnetic particle or liquid penetrant examinations in accordance with the requirements of Section III of the ASME Code. The finished flywheels as well as the flywheel material (rolled plate), are subjected to 100% volumetric ultrasonic inspection using procedures and acceptance standards specified in Section III of the ASME Code.

The reactor coolant pump motors are designed such that the flywheel is available for inservice inspection by removing a coverplate.

Compliance with Regulatory Guide 1.14, "Reactor Coolant Pump Flywheel Integrity," is set forth in Appendix A, including a description of the inservice inspection program for pump flywheels.

5.4.1.5.3 Material Acceptance Criteria

The reactor coolant pump motor flywheel conforms to the following material acceptance:

a. The nil-ductility transition temperature (NDTT) of the flywheel material is obtained by two drop weight tests (DWT) which exhibit "no-break" performance at 20°F in accordance with ASTM E-208. The above drop weight tests demonstrate that the NDTT of the flywheel material is no higher than 10°F.

b. A minimum of three Charpy V-notch impact specimens from each plate are tested at ambient (70°F) temperature in accordance with the specification ASTM E-23. The Charpy V-notch (C_v) energy in both the parallel and normal orientation with respect to the rolling direction of the flywheel material is at least 50 foot-pounds at 70°F. A lower bound K_{ID} reference curve (see Figure 5.4-3) has been constructed from dynamic fracture toughness data generated in A533, Grade B, Class 1 steel, (Reference 2). All data points are plotted on the temperature scale relative to the NDTT. The construction of the lower bound curve below which no single test point falls, combined with the use of dynamic data when flywheel loading is essentially static, together represent a large degree of conservatism. Reference of this curve to the guaranteed NDTT of + 10°F, the minimum fracture toughness is in excess of 100 ksi-in$^{1/2}$. See Appendix A for a further discussion of reactor coolant pump flywheel integrity.

c. The normal operating temperature of the reactor coolant pump motor flywheels is 120°F. This is more than 100°F above the RT_{NDT} of the flywheel material.

5.4.2 Steam Generators

5.4.2.1 Steam Generator Materials

5.4.2.1.1 Selection and Fabrication of Materials

All pressure boundary materials used in the steam generator are selected and fabricated in accordance with the requirements of Section III of the ASME Code. A general discussion of materials specifications is given in Subsection 5.2.3, with types of materials listed in Tables 5.2-2 and 5.2-3. Fabrication of reactor coolant pressure boundary materials is also discussed in Subsection 5.2.3, particularly in Subsections 5.2.3.3 and 5.2.3.4.

For Unit 1, testing has justified the selection of corrosion-resistant Inconel-690, a nickel-chromium-iron alloy (ASME SB-163 and SB-168), for the steam generator tubes and divider plate. The interior surfaces of the reactor coolant channel heads and nozzles are clad with austenitic stainless steel. The primary side of the tube sheet is weld clad with Inconel (Ni-Cr-Fe Weld Metal ASME II, Part C, SFA-5.14 ER NiCr-3). The tubes are expanded hydraulically into the tube sheet cladding. The recessed fusion welds are performed in compliance with Section III and IX of the ASME Code and are inspected thoroughly before each tube is expanded hydraulically.

For Unit 2, testing has justified the selection of corrosion-resistant Inconel-600, a nickel-chromium-iron alloy (ASME SB-163 and SB-168), for the steam generator tubes and divider plate. The interior surfaces of the reactor coolant channel heads and nozzles are clad with austenitic stainless steel. The primary side of the tube sheet is weld clad with Inconel (Ni-Cr-Fe Weld Metal F-Number-43). The tubes are hydraulically expanded into the tube sheet upper surface after the ends are seal welded to the tube sheet cladding. The recessed fusion welds are performed in compliance with Section III and IX of the ASME Code and are thoroughly inspected.

Code cases used in material selection are discussed in Subsection 5.2.1.

During manufacture, cleaning is performed on the primary and secondary sides of the steam generator in accordance with written procedures which follow the guidance of NQA-1-1994, Subpart 2.1, "Quality Assurance Requirements for Cleaning of Fluid Systems and Associated Components for Nuclear Power Plants". Onsite cleaning and cleanliness control are within the scope of the Licensee. Westinghouse recommendations for cleaning are given in Westinghouse process specifications, as discussed in Subsection 5.2.3.4.

The fracture toughness of the materials is discussed in Subsection 5.2.3.3. Adequate fracture toughness of ferritic materials in the RCPB is provided by compliance with Appendix G of 10 CFR 50 and with Article NB-2300 of Section III of the ASME Code.

5.4.2.1.2 Steam Generator Design Effects on Materials

Several features are employed to limit the regions where deposits would tend to accumulate and possibly cause corrosion. To avoid extensive crevice areas in the tube sheet, the tubes were hydraulically expanded on Unit 1 and Unit 2 to the full depth of the tube sheet. For Unit 1, a high-pressure drop lattice is located on top of the tubesheet; for Unit 2,

a flow distribution plate located below the preheat section encourages recirculating flow to sweep the tube sheet before turning upward through the tube bundle. The distribution plate also serves to separate the tube sheet from the colder feedwater entering at the preheat section for Unit 2. For Unit 1, auxiliary feedwater is introduced through the main feedwater feedring. For Unit 2 a separate auxiliary feedwater nozzle provided in the upper shell avoids introducing cold water into the preheat section.

5.4.2.1.3 Compatibility of Steam Generator Tubing with Primary and Secondary Coolants

The Unit 1 steam generator tube material is a nickel-chromium alloy, ASME Section II SB-163, Code Case N-20-3, Inconel 690. This material exhibits high resistance to corrosion and stress corrosion cracking in primary and secondary side environments. Code Case N-20-3 permits the use of Inconel 690 in the construction of Class I components in accordance with Section III, Division I of the ASME Code and gives requirements for strength and design stress intensities to meet code requirements. Inconel 690 corrosion resistance is derived primarily from the higher chromium content and heat treatment that produce a corrosion-resistant microstructure.

Inconel 600 tubing material is used for the Unit 2 steam generators.

As mentioned in Subsection 5.4.2.1.1, corrosion tests, which subjected the steam generator tubing material Inconel-600 (ASME SB-163) to simulated steam generator water chemistry, have indicated that the loss due to general corrosion over the 40 year life of the plant is insignificant compared to the tube wall thickness. Testing to investigate the susceptibility of heat exchanger construction materials to corrosion in caustic and chloride aqueous solutions has indicated that Inconel-600 has excellent resistance to general and pitting type corrosion in severe operating water conditions. Many reactor years of successful operation have shown the same low general corrosion rates as indicated by the laboratory tests.

Recent operating experience, however, has revealed areas on the secondary surfaces where localized attack has occurred. Both intergranular stress corrosion cracking and tube wall thinning were experienced in localized areas, although not at the same location or under the same environmental conditions. These localized areas of corrosion posed no threat to the public health and safety but were of concern because of their possible effect on plant availability.

To eliminate these localized areas of corrosion over a long-term operation of the unit, the use of phosphates for secondary side water control has been eliminated. The adoption of the

all volatile treatment (AVT) control program will minimize the possibility for recurrence of the tube wall thinning phenomenon related to phosphate addition. By restriction of the total alkalinity in the steam generator and prohibition of extended operation with free alkalinity, the AVT program will prevent the recurrence of intergranular corrosion in localized areas due to excessive levels of free caustic. Successful AVT operation requires maintenance of low concentrations of impurities in the steam generator water, thus reducing the potential for formation of highly concentrated solutions in low flow zones, the precursor of the corrosion mechanisms.

Laboratory testing has shown that the Inconel-600 and Inconel-690 tubing are compatible with the AVT environment. Isothermal corrosion testing in high purity water has shown that production heats of Inconel-600 and Inconel-690 at engineering stresses do not suffer intergranular stress corrosion cracking in extended exposure to high temperature water. These tests also showed that no thinning type of corrosion occurred. A series of capsule tests with high temperature pure water, with and without a synthetic sludge added, have shown no evidence of thinning or other corrosion after up to 12,500 hours. Model boiler tests being conducted by Westinghouse have shown quite favorable results for AVT to date.

AVT chemistry control has been employed in plant operations successfully for considerable periods. Plants with stainless steel tubes which have demonstrated successful AVT operation include Selni, Sena, and Yankee-Rowe. Selni has operated with AVT since 1964, Sena since 1966, and Yankee-Rowe since 1967. Among the plants with Inconel tubes which have operated successfully with AVT are the Hanford N-Reactor and Maine Yankee. The Hanford N-Reactor has operated with AVT since 1964. Maine Yankee has operated with AVT since 1972.

Additional extensive operating data are presently being accumulated with the conversion to AVT chemistry. A comprehensive program of steam generator inspections ensures detection and correction of any unanticipated degradation that might occur in the steam generator tubing.

Also, Primary Water Stress Corrosion Cracking (PWSCC) of mill annealed Inconel-600 steam generator tubing has been identified as having a potential effect on the operation of steam generators. PWSCC appears to occur in areas of high residual stress of steam generator tubes, such as the U-bend region of small radius tubes and the roll and roll transition zones within the tubesheet. Laboratory experiments have established that the factors contributing to the occurrence of PWSCC in service are: high operating temperatures, susceptible tubing microstructure, and high local stress-strain conditions. Each of these factors may be present in varying degrees in operating steam generators.

A reduction in T_{hot} for Byron Unit 2 and Braidwood Unit 2 has been evaluated with regard to steam generator degradation using a corrosion algorithm which provides a quantitative indication of steam generator corrosion susceptibility. Types of steam generator degradation considered are denting, OD and ID initiated stress corrosion cracking, and pitting. The results of this study indicated that, assuming that the steam generators are being run with secondary side chemistry that is as least as good as that specified by EPRI, operation at reduced temperatures could lead to a significant decrease in corrosion concern for the steam generators. The operating temperatures which were used in the algorithm are as follows:

Original T	Target T
618.4°F	600.0°F
543.3°F	522.1°F

Additional information also considered in the algorithm are individual plant characteristics such as materials of construction for the steam generator and other secondary side components, type of cooling water, and various other design conditions.

The results for each plant have been quantified in the form of a Cumulative Chemistry Operating Experience Factor (CCOEF) versus time. The CCOEF is a measure of the relative corrosion susceptibility of the steam generators. For each steam generator it has been demonstrated that operation at the above target temperatures will lead to a significant reduction in CCOEF at a given time. This reduction can be translated to an increase in operating life for the steam generators.

For PWSCC, results indicate the reduction in operating temperatures can also decrease the concern for this form of degradation. It has been demonstrated that for each plant the results of the algorithm indicated an approximate 33 percent reduction in propensity for the occurrence of PWSCC.

From the above discussion, it can be concluded that the reduction in T_{hot} is a significant contributor to improved steam generator operability.

5.4.2.1.4 Cleanup of Secondary Side Materials

Several methods are employed to clean operating steam generators of potentially detrimental secondary side deposits. Sludge lancing, a procedure in which a hydraulic jet inserted through an access opening (inspection port)loosens deposits, which are removed by means of a suction pump, can be performed when the need is indicated by the results of steam generator tube inspection. The injection of Poly Acrylic Acid (PAA) dispersant into the Feedwater System (FW) promotes iron oxide suspension in the steam generators and facilitates the removal of iron deposits from the steam generators via blowdown system filtration. The PAA injection points are located at a connection to the feedwater system header downstream of the 17A and 27A Feedwater Heaters. Blowdown procedures are performed as deemed necessary by regular water chemistry testing. The location of the blowdown piping suction, adjacent to the tube sheet and in a region of relatively low flow velocity, facilitates the efficient removal of impurities that have accumulated on the tube sheet.

5.4.2.2 Steam Generator Inservice Inspection

The steam generator is designed to permit inservice inspection of Class 1 and 2 components, including individual tubes. The design aspects that provide access for inspection and the proposed inspection program comply with the edition of Section XI of the ASME Code, Division 1, "Rules for Inspection and Testing of Components of Light-Water Cooled Plants," required by 10 CFR 50.55a, Paragraph g. A number of access openings make it possible to inspect and repair or replace a component according to the techniques specified. For Unit 1, these openings include three manways (two of them for access to both sides of the reactor coolant channel head and one for inspection and maintenance of the steam dryers) and 16, 2-inch inspection ports. Unit 1 also has eight hand holes in various regions of the lower shell, cone, and steam dome areas. For Unit 2 these openings include four manways (two of them for access to both sides of the reactor coolant channel head, and two of them for inspection and maintenance of the steam dryers) and four, 2-inch inspection ports, located just above the tube sheet surface.

Inservice inspection of Class 1 components includes that of individual steam generator tubes. Equipment and access openings provided make it possible to detect and locate tubes with a wall defect penetrating 20% or more. This program is discussed in Section 5.5.9 of the Technical Specifications.

5.4.2.3 Design Bases

Steam generator design data are given in Table 5.4-3. Code classifications of the steam generator components are given in

Section 3.2. Although the ASME classification for the secondary side is specified to be Class 2, the current philosophy is to design all pressure retaining parts of the steam generator, and thus both the primary and secondary pressure boundaries, to satisfy the criteria specified in Section III of the ASME Code for Class 1 components. The design stress limits, transient conditions and combined loading conditions applicable to the steam generator are discussed in Subsection 3.9.1. Estimates of radioactivity levels anticipated in the secondary side of the steam generators during normal operation, and the bases for the estimates are given in Subsection 11.2.2. The accident analysis of a steam generator tube rupture is discussed in Subsection 15.6.3.

The internal moisture separation equipment is designed to ensure that moisture carryover does not exceed 0.10% by weight for Unit 1 and 0.25% by weight for Unit 2 under the following conditions:

a. Steady-state operation up to 100% of full load steam flow, with water at the normal operating level.

b. Loading or unloading at a rate of 5% of full power steam flow per minute in the range from 15% to 100% of full load steam flow.

c. A step-load change of 10% of full power in the range from 15% to 100% full load steam flow.

The water chemistry on the reactor side is selected to provide the necessary boron content for reactivity control and to minimize corrosion of reactor coolant system surfaces. The water chemistry of the steam side and its effectiveness in corrosion control are discussed in Subsection 10.3.5. Compatibility of steam generator tubing with both primary and secondary coolants is discussed further in Subsection 5.4.2.1.3.

The steam generator is designed to prevent unacceptable damage from mechanical or flow induced vibration. This is discussed in Subsection 5.4.2.5.3. The tubes and tube sheet are analyzed for Unit 1 in References 8 and 9 and for Unit 2 in WCAP-7832 (Reference 4) and confirmed to withstand the maximum accident loading condition as it is defined in Subsection 3.9.1. Steam generator structural evaluations and tube integrity evaluations were performed to support operation at the Measurement Uncertainty Recapture (MUR) power level. Further consideration is given in Subsection 5.4.2.5.4 to the effect of tube wall thinning on accident condition stresses.

The preheat section of the Unit 2 steam generators is arranged to provide the maximum amount of counter flow feasible and, therefore, more efficient heat transfer.

For Unit 2, a separate auxiliary feedwater nozzle is provided in the upper shell in order to avoid introducing cold water into the possible hot and empty preheat section. The integrity of the steam generator design is, thus, maximized.

5.4.2.4 Design Description

The steam generators shown in Figure 5.4-10 (Unit 1 and Figure 5.4-11 (Unit 2)) are vertical shell and U-tube heat exchangers with integral moisture separating equipment.

On the primary side the reactor coolant flows through the inverted U-tubes, entering and leaving through nozzles located in the hemispherical bottom head of the steam generator. The head is divided into inlet and outlet chambers by a vertical divider plate extending from the head to the tube sheet.

Steam is generated on the shell side, flows upward and exits through the outlet nozzle at the top of the vessel. During normal operation for Unit 1, feedwater flows through a feedring with J-nozzles into the annulus downcomer region and is heated almost to saturation before entering the boiler region of the steam generator. During normal operation for Unit 2, feedwater flows through a flow restrictor, directly into the counter flow preheat section and is heated almost to saturation temperature before entering the boiler section. Subsequently the water-steam mixture flows upward through the tube bundle and into the steam drum section, where individual centrifugal moisture separators remove most of the entrained water from the steam. The steam continues to the secondary separators for further moisture removal, increasing its quality to a minimum of 99.90% for Unit 1 and 99.75% for Unit 2. The moisture separators recirculate the separated water through the annulus between the shell and tube bundle wrapper via the space formed by the distribution plate. The returning flow then combines with the already preheated water-steam mixture for another passage through the steam generator. Dry steam exits through the outlet nozzle which is provided with a steam flow restrictor, described in Subsection 5.4.4.

5.4.2.5 Design Evaluation

5.4.2.5.1 Forced Convection

The limiting case for heat transfer capability is the "Nominal 100 percent Design" case. The steam generator effective heat transfer coefficient is based on the coolant conditions of temperature and flow for this case. The best estimate for the heat transfer coefficients applied in steam generator design calculations and plant parameter selections are 1295 Btu/hr ft^2 °F for Unit 1 and 1301 Btu/hr ft^2 °F for Unit 2. This coefficient is approximately 5% to 10% less than the heat transfer performance experienced at a number of operating plants. The coefficient incorporates a specified fouling factor resistance of 0.00005 hr ft^2 °F/Btu (0.0001 in the preheat section) which is the value selected to account for the differences in the measured and calculated heat transfer performance as well as provide the margin indicated above.

Additionally, it is assumed that 20% of the steam generator tubes are plugged for Unit 1. Although margin for tube fouling is available, operating experience to date has not indicated that steam generator performance decreases over a long time period. Adequate tube area is selected to ensure that the full design heat removal rate is achieved.

5.4.2.5.2 Natural Circulation Flow

In the event of loss of offsite power and consequential loss of forced circulation within the reactor coolant system, natural circulation functions to remove core decay heat and permit the plant to be stabilized in the hot standby operational mode. Under this condition, pressurizer pressure is maintained by one pressurizer backup heater group, which is powered from one of the emergency electrical buses. To ensure that one backup heater group is available, assuming a single failure, the Byron/Braidwood station is designed with the capability for manual loading of separate backup heater groups (i.e., group A and group B, respectively) on independent emergency, electrical buses (i.e., train A and train B, respectively) within 1 hour, following loss of offsite power. One heater group within 1 hour is sufficient to satisfy the minimum heat capacity requirement (150-kW) for natural circulation following loss of offsite power. This minimum heat capacity requirement conservatively covers the Byron/Braidwood pressurizer heat losses at or below normal operating pressure, following loss of offsite power, and will permit pressurizer pressure to be stabilized and maintained at any desired value.

The pressurizer heater design is such that following loss of offsite power and assuming a single failure, sufficient heater capacity is available to stabilize pressurizer pressure and preclude boiling in the reactor coolant system. If pressurizer heaters are not available to maintain pressurizer pressure, the reactor coolant system could be cooled via secondary side steam release at a rate that exceeds pressurizer heat losses. This operation would prevent saturation pressure from being reached in the reactor vessel and preclude boiling. If boiling were to occur, any vapor that entered the steam generator U-tubes would be condensed by heat transfer to the fluid in the secondary side of the steam generators. Vapor would be condensed in this manner as long as any part of the steam generator U-tube bundle remains submerged.

5.4.2.5.3 Mechanical and Flow-Induced Vibration Under Normal Operation

In the design of the Unit 1 steam generators, B&W evaluated the potential for tube wall degradation due to mechanical or flow-induced vibration. The primary cause of tube vibration in the Unit 1 steam generators is due to secondary fluid flow on the outside of the tubes. In the range of normal steam generator operating conditions, the effects of primary fluid flow inside the tubes and mechanically induced tube vibration are considered to be negligible.

B&W has performed flow-induced vibration (FIV) analyses and evaluations to confirm that the tube bundle is adequately supported to avoid significant levels of tube vibration.

The three pertinent cross-flow FIV mechanisms are vortex shedding resonance, random turbulence excitation, and fluid elastic instability. The FIV analysis verified that excessive tube vibration from these sources is avoided. Particular areas of emphasis are the tube bundle entrance and the U-bend region.

The potential for fretting is assessed by FIV wear analysis. The FIV analysis is used to confirm that the tube bundle is adequately supported to prevent excessive tube motion due to FIV excitation mechanisms.

The Unit 1 steam generator tube bundle design parameters that are most important for controlling FIV are:

a. Tube and support materials;
b. Tube outside diameter, thickness and pitch/diameter ratios, and diametric clearance at the lattice bars;
c. Bundle height;
d. Bend radius of the outermost tube;
e. Number of lattice grids;
f. Number of U-bend supports;
g. Width of fan bar and high bars;
h. Steam flow at full power; and
i. Circulation ratio.

These parameters for the Unit 1 steam generator tube bundles are compared with the design information of other B&W steam generators. This comparison shows similarity with existing units and indicates that all regions of the tube bundle are adequately supported to prevent excessive tube motion due to FIV. This comparison also provides a basis, which is supported by the analyses performed, to conclude that the Unit 1 steam generators will be adequately resistant to FIV. FIV was evaluated at MUR operating conditions and concluded that the Unit 1 steam generator tube bundles are adequately supported and designed to preclude detrimental FIV and fretting wear over the 40 year design life of the steam generators.

In the design of the Unit 2 steam generators, the potential for tube wall degradation attributable to mechanical or flow-induced excitation has been thoroughly evaluated. The evaluation included detailed analyses of the tube support systems for various mechanisms of tube vibration.

The primary cause of tube vibration in heat exchangers is hydro-dynamic excitation due to secondary fluid flow on the outside of the tubes. In the range of normal steam generator operating conditions, the effects of primary fluid flow inside the tubes and mechanically induced tube vibration are considered to be negligible.

To evaluate flow induced tube vibration in the preheater region of the Unit 2 tube bundle, Westinghouse undertook an extensive

program employing data from operating plants, full and partial scale model tests, and analytical tube vibration models. Operating plant data consisted of tube wear data from pulled tube evaluations and eddy current tests and tube motion data from accelerometers installed inside selected tubes. Model testing generated tube wear data, flow velocity distributions, tube motion parameters, and flow-induced tube vibration forcing functions. The tube vibration analyses applied the forcing functions to produce tube motion data. The results of this evaluation were consistent with the early operating experience of preheat steam generators.

On the basis of an extensive model test and analysis program, Westinghouse designed, verified, and implemented a modification to the steam generator to reduce tube vibratory response to preheater inlet flow excitation. Additionally, the magnitude of the flow forcing function was reduced through implementation of a preheater flow bypass arrangement in the feedwater system. The verification of the performance of the modifications in reducing tube excitation and response was done with input from a full-scale test under simulated conservative flow and tube support conditions.

Fatigue of the tubes in the Unit 2 preheater region which are subject to flow-induced excitation is not a concern since the maximum resultant stresses in the tube are below the endurance limit of the material.

For areas of the tube bundle other than the preheater, parallel flow analyses were performed to determine the vibratory deflections. These analyses indicate that the flow velocities are sufficiently low such that they result in negligible fatigue and vibratory amplitudes. The support system, therefore, is deemed adequate with regard to parallel flow excitation.

To evaluate crossflow at the exit of the downcomer flow to the tube bundle and at the top of the bundle in the U-bend area, Westinghouse performed an experimental research program of crossflow in tube arrays with the specific parameters of the steam generator. Air and water model tests were employed. The results of this research indicate that these regions of the bundle are not subject to the vortex shedding mechanism of tube excitation. Vortex shedding was found not to be a significant mechanism in these two regions for the following reasons:

a. Flow turbulence in the downcomer and tube bundle inlet region inhibit the formation of Von Karman vortices.

b. Both axial and crossflow velocity components exist on the tubes. The axial flow component disrupts the Von Karman vortices.

This research program was also the basis for evaluation of the fluid-elastic mechanism due to cross flow at the tubesheet. The evaluation showed the adequacy of the tube support arrangement.

Flow turbulence can result in some tube excitation in these regions. This excitation is of little concern, however, since:

a. Maximum stresses in the tubes are at least an order of magnitude below the fatigue endurance limit of the tube material, and

b. Tube support arrangements preclude significant vibratory motion.

In summary, tube vibration has been thoroughly evaluated. Mechanical and primary flow excitation are considered negligible. Secondary flow excitation has been evaluated. From this evaluation, it is concluded that if tube vibration does occur, the magnitude will be limited. Tube fatigue due to the vibration is judged to be negligible. Any tube wear resulting from the tube vibration would be limited and would progress slowly. This allows use of a periodic tube inservice inspection program for detection and followup of any tube wear. This inservice inspection program, in conjunction with tube plugging criteria, provides for safe operation of the steam generators. Flow induced vibration was evaluated at MUR operating conditions and concluded that these conditions will not result in rapid rates of tube wear or high levels of vibration in the Unit 2 steam generator tube bundles.

5.4.2.5.4 Allowable Tube Wall Thinning Under Accident Conditions

The results of a study performed for the Unit 1 steam generator tubes (0.6875-inch nominal diameter, 0.040-inch nominal thickness) under accident loading are documented in Reference 10. This evaluation shows that a wall thickness of less than 0.023 inches would have a maximum faulted condition stress (i.e., due to combined LOCA and safe shutdown earthquake loads) that is less than the allowable limit. This thickness is 0.0122 inches less than the minimum steam generator tube wall thickness of 0.036 inches reduced to 0.0352 inches by the general corrosion and erosion loss of 0.0008 inches (Reference 11).

For Unit 2, an evaluation is performed to determine the extent of tube wall thinning that can be tolerated under accident conditions. Under such a postulated design-basis accident, vibration is of short enough duration that there is no endurance problem. The results of a study made on "D series" (0.75 inch nominal diameter 0.043 inch nominal thickness) tubes under accident loading are discussed in WCAP-7832 (Reference 4) and show that a minimum wall thickness of 0.026 inches would have a maximum faulted condition stress (i.e., due to combined LOCA

and safe shutdown earthquake loads) that is less than the allowable limit. This thickness is 0.010 inches less than the minimum steam generator tube wall thickness 0.039 reduced to 0.036 inches by the assumed general corrosion and erosion loss of 0.0033 inches.

The corrosion rate is based on a conservative weight loss rate for Inconel tubing in flowing 650°F primary side reactor coolant fluid. The weight loss, when equated to a thinning rate and projected over a 40-year plant life with appropriate reduction after initial hours, is equivalent to 0.083 mils thinning. The assumed corrosion rate of 3 mils leaves a conservative 2.917 mils for general corrosion thinning on the secondary side.

For both Units 1 and 2, the steam generator tubes, existing originally at their minimum wall thickness and reduced by a very conservative general corrosion loss, still provide quite an adequate safety margin. Thus, it can be concluded that the ability of the steam generator tubes to withstand accident loadings is not affected by a lifetime of general corrosion losses. Steam generator tube structural and integrity evaluations performed to support operation at the MUR power level concluded that significant safety margin remains.

Steam generator tube integrity requirements are contained in Technical Specification 3.4.19 and Regulatory Guide 1.121, "Bases for Plugging Degraded PWR Steam Generator Tubes," as set forth in Appendix A.

5.4.2.6 Tests and Inspection

The steam generator NDE program is given in Table 5.4-4.

Radiographic inspection and acceptance standards shall be in accordance with the requirements of Section III of the ASME Code.

Liquid penetrant inspection is performed on weld deposited tube sheet cladding, channel head cladding, tube to tube sheet weldments, and weld deposit cladding. Liquid penetrant inspection and acceptance standards are in accordance with the requirements of Section III of the ASME Code.

Magnetic particle inspection is performed on the tube sheet forging, channel head casting, nozzle forgings, and the following weldments:

a. nozzle to shell,

b. support brackets,

c. instrument connection (primary and secondary),

d. temporary attachments after removal, and

e. all accessible pressure containing welds after hydrostatic test.

Magnetic particle inspection and acceptance standards are in accordance with requirements of Section III of the ASME Code. An ultrasonic test is performed on the tube sheet forging, tube sheet cladding, secondary shell and head plate and nozzle forgings.

The heat transfer tubing is subjected to eddy current and ultrasonic testing prior to insertion.

Hydrostatic tests are performed in accordance with Section III of the ASME Code.

In addition, the heat transfer tubes shall be subjected to a hydrostatic test pressure prior to installation into the vessel which is not less than 1.25 times the primary side design pressure.

5.4.3 Reactor Coolant Piping

5.4.3.1 Design Bases

The reactor coolant system (RCS) piping is designed and fabricated to accommodate the system pressures and temperatures attained under all expected modes of plant operation or anticipated system interactions. Stresses are maintained within the limits of Section III of the ASME Nuclear Power Plant Components Code. Code and material requirements are provided in Section 5.2.

Materials of construction are specified to minimize corrosion/ erosion and ensure compatibility with the operating environment.

The piping in the RCS is Seismic Category I, Quality Group A and is designed and fabricated in accordance with ASME Section III, Class 1 requirements.

Stainless steel pipe conforms to ANSI B36.19 for sizes 1/2 inch through 12 inches and wall thickness Schedules 40S through 80S. Stainless steel pipe outside of the scope of ANSI B36.19 conforms to ANSI B36.10.

The minimum wall thicknesses of the loop pipe and fittings are not less than that calculated using the ASME III Class 1 formula of Paragraph NB-3641.1 (Reference 3) with an allowable stress value of 17,550 psi. The pipe wall thickness for both bypass and pressurizer surge lines shall be Schedule 160. The minimum pipe bend radius is five nominal pipe diameters; ovality does not exceed 6%.

All butt welds, branch connection nozzle welds, and boss welds shall be of a full penetration design.

Processing and minimization of sensitization are discussed in Subsections 5.2.3.

Flanges conform to ANSI B16.5.

Socket weld fittings and socket joints conform to ANSI B16.11.

5.4.3.2 Design Description

Principal design data for the reactor coolant piping are given in Table 5.4-5.

Reactor coolant loop pipe is seamless forged. Reactor coolant loop fittings are cast, seamless without longitudinal or electroslag welds. Pipe and fittings comply with the requirements of the ASME Code, Section II, Parts A and C, Section III, and Section IX.

The RCS piping is specified in the smallest sizes consistent with system requirements. This design philosophy results in the reactor inlet and outlet piping diameters given in Table 5.4-5. The line between the steam generator and the pump suction is larger to reduce pressure drop and improve flow conditions to the pump suction.

The reactor coolant piping and fittings which makeup the loops are austenitic stainless steel. All smaller piping which comprise part of the RCS such as the pressurizer surge line, spray and relief line, loop drains and connecting lines to other systems are also austenitic stainless steel. The nitrogen supply line for the pressurizer relief tank is carbon steel. All joints and connections are welded, except for the pressurizer relief and the pressurizer code safety valves, where flanged joints are used.

All piping connections from auxiliary systems are made above the horizontal centerline of the reactor coolant piping, with the exception of:

a. Residual heat removal pump suction lines, which are 45° down from the horizontal centerline. This enables the water level in the RCS to be lowered in the reactor coolant pipe while continuing to operate the residual heat removal system, should this be required for maintenance.

b. Loop drain lines and the connection for temporary level measurement of water in the RCS during refueling and maintenance operation.

c. The differential pressure taps for flow measurement, which are downstream of the steam generators on the first 90° elbow. The tap arrangement is discussed in the instrumentation section of this description.

d. The pressurizer surge line, which is attached at the horizontal centerline.

e. The safety injection connections to the cold leg, which are located on the centerline.

f. Deleted.

g. The lines from the chemical and volume control regenerative heat exchangers which are attached at the horizontal centerline.

h. The line to the chemical and volume control letdown heat exchangers which is attached at the horizontal centerline.

i. The reactor coolant sample lines which are attached at the horizontal centerline.

Penetrations into the coolant flow path are limited to the following:

a. The spray line inlet connections extend into the cold leg piping in the form of a scoop so that the velocity head of the reactor coolant loop flow adds to the spray driving force.

b. The reactor coolant sample system taps protrude into the main stream to obtain a representative sample of the reactor coolant.

c. Hot leg scoops extend into the reactor coolant to direct coolant flow past the thermowell-mounted, narrow-range, fast-response RTDs, providing a representative coolant temperature.

d. The wide range temperature detectors and the cold leg fast response temperature detectors are located in resistance temperature detector wells that extend into the reactor coolant pipes.

e. The spare resistance temperature detection wells that will accept the narrow range resistance temperature detector elements extend into the Unit 2 reactor coolant hot and cold leg piping.

Separate temperature measurements for each reactor coolant loop are provided so that individual temperature signals may be developed for use in the reactor control and protection system. Thermowell-mounted, dual-element, fast-response RTDs are used to measure representative reactor coolant temperatures. One element of each RTD is active; the other serves as an installed spare.

The thermowell-mounted RTDs are located in the three hot leg scoops to measure a representative hot leg temperature for each loop. The scoops extend into the flow stream (at locations 120° apart in the cross-sectional plane) on each reactor coolant hot

leg. The cold leg temperature is measured by a single thermowell-mounted RTD located downstream of the pump discharge. Because of the mixing action of the pump, only one RTD is required to obtain a representative cold leg temperature measurement for a given loop. The RTD is located as close as possible to the weld connection at the pump discharge, and is in the same relative position for each loop. Signals from these instruments are used to compute the reactor coolant ΔT (temperature of the hot leg, T_{hot}, minus the temperature of the cold leg, T_{cold},) and an average reactor coolant temperature (T_{avg}). The T_{avg} for each loop is indicated on the main control board.

RCS piping includes those sections of piping interconnecting the reactor vessel, steam generator, and reactor coolant pump. It also includes the following:

a. Charging line and alternate charging line from the system isolation valve up to the branch connections on the reactor coolant loop.

b. Letdown line and excess letdown line from the branch connections on the reactor coolant loop to the system isolation valve.

c. Pressurizer spray lines from the reactor coolant cold legs to the spray nozzle on the pressurizer vessel.

d. Residual heat removal lines to or from the reactor coolant loops up to the designated check valve or isolation valve.

e. Safety injection lines from the designated check valve to the reactor coolant loops.

f. Accumulator lines from the designated check valve to the reactor coolant loops.

g. Deleted.

h. Loop fill, loop drain, sample*, and instrument* lines to or from the designated isolation valve to or from the reactor coolant loops.

i. Pressurizer surge line from one reactor coolant loop hot leg to the pressurizer vessel inlet nozzle.

j. Resistance temperature detector scoop element, pressurizer spray scoop, sample connection* with scoop, reactor coolant temperature element installation boss, and the temperature element well itself.

k. All branch connection nozzles attached to reactor coolant loops.

l. Pressure relief lines from nozzles on top of the pressurizer vessel up to and through the power-operated pressurizer relief valves and pressurizer safety valves.

m. Seal injection water to or from the reactor coolant pump inside reactor containment.

n. Auxiliary spray line from the isolation valve to the pressurizer spray line header.

o. Sample lines* from pressurizer to the isolation valve.

Note: *Lines with a 3/8 inch flow restricting orifice qualify as Seismic Category II; in the event of a break in one of these Category II lines, the normal makeup system is capable of providing makeup flow while maintaining pressurizer water level.

Details of the materials of construction and codes used in the fabrication of reactor coolant piping and fittings are discussed in Subsection 5.2.1.

5.4.3.3 Design Evaluation

Piping load and stress evaluation for normal operating loads, seismic loads, blowdown loads, and combined normal, blowdown and seismic loads is discussed in Subsection 3.9.1.

5.4.3.3.1 Material Corrosion/Erosion Evaluation

The water chemistry is selected to minimize corrosion. A periodic analysis of the coolant chemical composition is performed to verify that the reactor coolant quality meets the specifications.

The design and construction are in compliance with ASME Section III, which permits inspection per ASME Section XI. Pursuant to this, all pressure containing welds out to the second valve that delineates the RCS boundary are available for examination with removable insulation.

Components constructed with stainless steel will operate satisfactorily under normal plant chemistry conditions in pressurized water reactor systems, because chlorides, fluorides, and particularly oxygen, are controlled to very low levels. (See Subsection 5.2.3.)

Periodic analysis of the coolant chemical composition is performed to monitor the adherence of the system to desired reactor coolant water quality listed in Technical Requirements Manual (TRM) 3.4.6. Maintenance of the water quality to minimize corrosion is accomplished using the chemical and volume control system and sampling system which are described is Subsection 9.3.4.

5.4.3.3.2 Sensitized Stainless Steel

Sensitized stainless steel is discussed in Subsection 5.2.3.

5.4.3.3.3 Contaminant Control

Contamination of stainless steel and Inconel by copper, low melting temperature alloys, mercury and lead is prohibited. Colloidal graphite is the only permissible thread lubricant.

Prior to application of thermal insulation, the austenitic stainless steel surfaces are cleaned and analyzed to a halogen limit of 0.0015 mg Cl/dm^2 and 0.0015 mg F/dm^2.

5.4.3.4 Tests and Inspections

The RCS piping NDE program is given in Table 5.4-6.

Volumetric examination is performed throughout 100% of the wall volume of each pipe and fitting in accordance with the applicable requirements of Section III of the ASME Code for all pipe 27-1/2 inches and larger. All unacceptable defects are eliminated in accordance with the requirements of the same section of the code.

A liquid penetrant examination is performed on both the entire outside and inside surfaces of each finished fitting in accordance with the criteria of ASME Section III. Acceptance standards are in accordance with the applicable requirements of ASME Section III.

The pressurizer surge and loop bypass lines conform to SA-376 Grade 304, 304N, or 316 with supplementary requirements S2 (transverse tension tests), and S6 (ultrasonic test). The S2 requirement applies to each length of pipe. The S6 requirement applies to 100% of the piping wall volume.

The end of pipe sections, branch ends and fittings are machined back to provide a smooth weld transition adjacent to the weld path.

5.4.4 Main Steamline Flow Restriction

5.4.4.1 Design Bases

The outlet nozzle of the steam generator is provided with a flow restrictor designed to limit steam flow in the unlikely event of a break in the main steamline. A large increase in steam flow will create a back pressure which limits further increase in flow. Several protective advantages are thereby provided: rapid rise in containment pressure is prevented, the rate of heat removal from the reactor coolant is kept within acceptable limits, thrust forces on the main steamline piping are reduced, and most important, stresses on internal steam generator components, particularly the tube sheet and tubes, are limited. The restrictor is also designed to minimize the unrecovered pressure loss across the restrictor during normal operation.

5.4.4.2 Design Description

For Unit 1, the flow restrictor consists of seven stainless steel venturi inserts (SA-316-304L) which are retained with a SA 516 Grade 70 retainer plate. For Unit 2, the flow restrictor consists of seven Inconel (ASME SB-163) venturi inserts which are inserted into the holes in an integral steam outlet low alloy steel forging. After insertion into the low alloy steel forging holes, the Inconel venturi nozzles are welded to the Inconel cladding on the inner surface of the forging. The inserts for all units are arranged with one venturi at the centerline of the outlet nozzle and the other six equally spaced around it. The flow restrictors are ASME Class 1 components and are Seismic Category I. They have been evaluated using dynamic seismic analytical methods.

5.4.4.3 Design Evaluation

The flow restrictor design has been sufficiently analyzed to ensure its structural adequacy. The equivalent throat diameter for each steam generator outlet is 14.2 inches for Unit 1, and 16 inches for Unit 2. The resultant pressure drop through the restrictor at 100% steam flow is approximately 3.2 psi for Unit 1 and 2.77 psi for Unit 2. These are based on design flow rates of 3.77×10^6 lb/hr for Unit 1 and 3.79×10^6 lb/hr for Unit 2. The Unit 1 pressure drop is calculated at a steam pressure of 913 psia, which is the pressure for the steam generators at a T_{avg} of 578.3°F (Reference 12). The Unit 2 pressure drop is based on a steam pressure of 990 psia (refer to Table 5.1-1) and a T_{avg} of 588.4°F. Materials of construction and manufacturing of the flow restrictor are in accordance with Section III of the ASME Code.

5.4.4.4 Tests and Inspections

Since the restrictor is not a part of the steam system

boundary, no tests and inspections beyond those during fabrication are anticipated.

5.4.5 Main Steamline Isolation System (BWRs Only)

Not applicable to the Byron/Braidwood design.

5.4.6 Reactor Core Isolation Cooling System (BWRs Only)

Not applicable to the Byron/Braidwood design.

5.4.7 Residual Heat Removal System

The residual heat removal system (RHRS) transfers heat from the reactor coolant system (RCS) to the Component Cooling System (CCS) to reduce the temperature of the reactor coolant to the cold shutdown temperature at a controlled rate during the second part of normal plant cooldown and maintains this temperature until the plant is started up again.

Parts of the RHRS also serve as parts of the emergency core cooling system (ECCS) during the injection and recirculation phases of a loss-of-coolant accident (LOCA) (see Subsection 6.3.2).

The RHRS also is used to transfer refueling water between the refueling cavity and the refueling water storage tank at the beginning and end of the refueling operations.

Nuclear plants employing the same RHRS design as the Byron Station are given in Section 1.3.

5.4.7.1 Design Bases

RHRS component design parameters are listed in Table 5.4-8.

The RHRS is placed in operation approximately 4 hours after reactor shutdown when the temperature and pressure of the RCS are approximately 350°F and 360 psig, respectively. Assuming that two heat exchangers and two pumps are in service and that each heat exchanger is supplied with component cooling water at design flow and maximum temperature, the RHRS is designed to reduce the temperature of the reactor coolant from 350°F to 140°F within a 38.3 hour period with no SFP heat load. The heat load handled by the RHRS during the cooldown transient includes decay heat from the core, reactor coolant pump heat, and sensible heat released from the RCS metal and water. See Table 5.4-7.

Assuming that only one heat exchanger and pump are in service and that the heat exchanger is supplied with component cooling water at design flow and maximum temperature, the RHRS is capable of reducing the temperature of the reactor coolant from 350°F to 200°F within a 46.3 hour period with no SFP heat load.

The RHRS is designed to be isolated from the RCS whenever the RCS pressure exceeds the RHRS design pressure. The RHRS is isolated from the RCS on the suction side by two motor-operated valves in series on each suction line.

Each motor-operated valve is interlocked to prevent its opening if RCS pressure is greater than approximately 360 psig. Closing of the RHR suction isolation valves is controlled administratively. However, an alarm is provided to alert the operator in the event that double isolation is not being maintained and RCS pressure is high. Inputs to the alarm are from Limitorque limit switches and the hot leg wide-range pressure transmitters. The alarm setpoint is 400 psig. The RHRS is isolated from the RCS on the discharge side by two check valves in each return line. Also provided on the discharge side is a normally open motor-operated valve downstream of each RHRS heat exchanger. (These check valves and motor-operated valves are not considered part of the RHRS; they are shown as part of the ECCS, see Drawing M-61.)

Each inlet line to the RHRS is equipped with a pressure relief valve designed to prevent RHRS overpressurization assuming the most severe overpressure transient. These relief valves protect the system from inadvertent overpressurization during plant heatup, cooldown and cold shutdown decay heat removal operations. Each discharge line from the RHRS to the RCS is equipped with a pressure-relief valve capable of relieving the maximum possible back leakage through the valves isolating the RHRS from the RCS. A more detailed description of overpressurization protection is provided in Subsection 5.4.7.2.3.

The RHRS is designed for a single nuclear power unit and is not shared among nuclear power units.

The RHRS is designed to be fully operable from the control room for normal operation. Manual operations required in the control room of the operator are: closing the normally open valves in the lines from the RWST, opening the suction isolation valves, positioning the flow control valves downstream of the RHRS heat exchangers, and starting the RHR pumps. By nature of its redundant two-train design, the RHRS is designed to accept all major component single failures with the only effect being an extension in the required cooldown time. For two low probability electrical system single failures, i.e., failure in the suction isolation valve interlock circuitry, or diesel generator failure in conjunction with loss of offsite power, limited operator action outside the control room is required to open the suction isolation valves. The only motor-operated valves in the RHRS which are subject to flooding (suction isolation) are valves not required to function after a loss-of-coolant accident. Although Exelon Generation Company considers it to be of low probability, spurious operation of a single

motor-operated valve can be accepted without loss of function as a result of the redundant two-train design. For further information see Subsection 7.6.4.

Missile protection, protection against dynamic effects associated with the postulated break of piping, and seismic design are discussed in Sections 3.5, 3.6, and 3.7, respectively.

The decay heat mode that was used in designing the RHRS is listed in Reference 6.

5.4.7.2 System Design

5.4.7.2.1 Schematic Piping and Instrumentation Diagrams

The RHRS, as shown in Drawing M-62, consists of two residual heat exchangers, two RHR pumps, and the associated piping, valves, and instrumentation necessary for operational control. The inlet lines to the RHRS are connected to the hot legs of two reactor coolant loops, while the return lines are connected to the cold legs of each of the reactor coolant loops. These return lines are also the ECCS low head injection lines (see Drawing M-61).

The RHRS suction lines are isolated from the RCS by two motor-operated valves in series. Each discharge line is isolated from the RCS by two check valves in series located inside the containment. (The check valves on each discharge line are not part of the RHRS; these are shown as part of the ECCS, see Drawing M-61.)

During RHRS operation, reactor coolant flows from the RCS to the residual heat removal pumps, through the tube side of the residual heat exchangers, and back to the RCS. The heat is transferred to the component cooling water circulating through the shell side of the residual heat exchangers.

Coincident with operation of the RHRS, a portion of the reactor coolant flow may be diverted from downstream of the RHR heat exchangers to the chemical and volume control system (CVCS) low-pressure letdown line for cleanup and/or pressure control. By regulating the diverted flow-rate and the charging flow, the RCS pressure may be controlled. Pressure regulation is necessary to maintain the pressure range dictated by the fracture prevention criteria requirements of the reactor vessel and by the number 1 seal differential pressure and net positive suction head requirements of the reactor coolant pumps.

An additional letdown flow path has been added. This flow path, which is isolated by locked closed valves during normal operations, uses a booster pump to increase letdown flow above that achieved by the original design. Suction is taken from the "A" loop of RHR and pumped into the low-pressure letdown line for cleanup of reactor coolant. Portions of the boron thermal regeneration chiller circuitry have been modified to provide power and control for the pump motors.

The RCS cooldown rate is manually controlled by regulating the reactor coolant flow through the tube side of the residual heat exchangers. A line containing a flow control valve bypasses each residual heat exchanger and is used to maintain a constant return flow to the RCS. Instrumentation is provided to monitor system pressure, temperature, and total flow.

The RHRS, including the RHR pump, is used in transferring water to and from the refueling cavity during refueling. After refueling operations, water is pumped back to the refueling water storage tank until the water level is brought down to the flange of the reactor vessel. The remainder of the water is removed via a drain connection at the bottom of the refueling canal.

When the RHRS is in operation, the water chemistry is the same

as that of the reactor coolant. Provision is made for the process sampling system to extract samples from the flow of reactor coolant in the RHRS miniflow. Additional local sampling points are also provided, including one between the pump and heat exchanger.

In its capacity as the low head portion of the ECCS, the RHRS performs two services. It functions in conjunction with the high head portion of the ECCS to provide injection of borated water from the refueling water storage tank, into the RCS cold legs, during the injection phase following a loss-of-coolant accident. The RHRS also functions to provide long-term recirculation capability for core cooling following the injection phase of the loss-of-coolant accident. This function is accomplished by aligning the RHRS to take fluid from the containment sump, cool it by circulation through the residual heat exchangers, and supply it to the core directly as well as via the centrifugal charging pumps and safety injection pumps.

The use of the RHRS as part of the ECCS is more completely described in Section 6.3.

Description of Component Interlocks

The RHR pumps, in order to perform their ECCS function, are interlocked to start automatically on receipt of a safety injection signal (see Section 6.3).

The RHR suction isolation valves in each inlet line from the RCS are separately interlocked to prevent their being opened with RCS pressure is greater than approximately 360 psig. This interlock is described in more detail in Subsections 5.4.7.2.3 and 7.6.4. Closing of the RHR suction isolation valves is controlled administratively.

The RHR suction isolation valves are also interlocked to prevent their being opened unless the isolation valves in the following lines are closed for the associated functional reasons:

a. Recirculation lines from the residual heat exchanger outlets to the suctions of the safety injection (SI) pumps and centrifugal charging (CCHG) pumps. This ensures the suction of the SI and/or CCHG pumps cannot be overpressurized by normal cooldown flow via an open recirculation line isolation valve (valves CV8804A and/or SI8804B).

b. RHR pump suction line from the refueling water storage tank (RWST). This ensures positive isolation to prevent overpressurization of the RWST and RHR/RWST suction piping before initiating a normal cooldown. Check valves SI8958A/B isolate the RHR

pump suction from the RWST with motor-operated valves SI8812A/B ensuring positive isolation,

c. RHR pump suction line from the containment sump. This ensures normal cooldown flow cannot be discharged to the containment sump via an open sump isolation valve and prevents the possibility of draining the RWST to the containment sump by misalignment of valves SI8811A/B (see Section 6.3).

The RHR isolation valve interlocks are designed to ensure complete electrical separation of the power source and cabling to satisfy single failure criteria.

Electrical separation is accomplished through the use of motor-operated, gear-driven switches and/or stem-mounted limit switches, as required, to implement the interlocking features while maintaining physical and electrical separation of power trains.

The motor-operated valve in each miniflow line is interlocked to provide automatic operation. The miniflow valves are Safety Class 2, as are the orifice plates FE-610 and FE-611. The three position controls at the main control board prevent inadvertent operator isolation of the miniflow bypass line. The control switch Open-Auto-Close position control has a spring return to Auto from the Close position to prevent pump deadheading. A control switch maintained open feature is provided for the operator to block miniflow path closure during RHR pump manual starts for testing or for shutdown cooling modes. Gradual warmup of the RHR pump to RCS hot leg temperature requires that the pump recirculation path remain open for a time period longer than the flow interlock would allow. The normal position for the control switch is Auto.

During normal plant operation at power when the RHR pump is not running, the motor-operated valve in the miniflow line between the RHR pump suction and discharge is open. It closes when the RHR pump discharge flow goes above an upper limit of 1400 gpm at 350°F and reopens when the pump discharge flow falls below a minimum value of 750 gpm at 350°F. This interlock ensures that the flow through the RHR pump will be sufficient to cool the pump when the pressure in the lines to which the pump discharge flow is directed is greater than the pump discharge pressure.

Separate flow sensors are provided in each train of the RHRS, to position the respective motor-operated miniflow bypass isolation valves. Although the sensors are not specifically classified as 1E (but rather as NNS) instruments, they and their associated interlock circuitry and the miniflow bypass valves satisfy single failure criteria. The defeat of both miniflow bypass valves is not a credible event because of the two train design. This is shown in the failure modes and effect analysis contained in Table 5.4-17.

Electrical power is provided to each miniflow bypass isolation valve and interlock by either separate and redundant electrical Train A or Train B, consistent with the power supply to the respective RHR pumps. Random single failures are accommodated in the RHRS design. The two separate and redundant trains

provided prevent possible single failure from negating separate and redundant train operation for removing residual decay heat.

5.4.7.2.2 Equipment and Component Description

The materials used to fabricate RHRS components are in accordance with the applicable code requirements. All parts of components in contact with borated water are fabricated or clad with austenitic stainless steel or equivalent corrosion resistant material. Component parameters are given in Table 5.4-8.

Residual Heat Removal Pumps

Two pumps are installed in the RHRS. The pumps are sized to deliver reactor coolant flow through the residual heat exchangers to meet the plant cooldown requirements. The use of two separate Residual Heat Removal trains ensures that cooling capacity is only partially lost should one pump become inoperative.

The RHR pumps are protected from overheating and loss of suction flow by miniflow bypass lines that ensure flow to the pump suction. A valve located in each miniflow line is regulated by a signal from the flow transmitters located in each pump discharge header.

A pressure sensor in each pump discharge header provides a signal for an indicator in the control room. A high-pressure alarm is also actuated by the pressure sensor.

The two pumps are vertical, centrifugal units with mechanical seals on the shafts. All pump surfaces in contact with reactor coolant are austenitic stainless steel or equivalent corrosion resistant material. Each RHR pump has a seal cooler, which is supplied with component cooling water.

The RHR pumps function as part of the ECCS during both injection and recirculation phases. (See Section 6.3 for further information and for the RHR pump performance curves.)

Residual Heat Removal Heat Exchangers

Two RHR heat exchangers are installed in the system. The heat exchanger design is based on providing a UA value of 2.16×10^6 Btu/hr-°F. This UA value was selected based on meeting the design two train cooldown time of approximately 36 hours.

The installation of two heat exchangers in separate and independent residual heat removal trains assures that the heat removal capacity of the system is only partially lost if one train becomes inoperative.

The RHR heat exchangers are of the shell and U-tube type. Reactor coolant circulates through the tubes, while component cooling water circulates through the shell. The tubes are welded to the tube sheet to prevent leakage of reactor coolant.

Each heat exchanger is provided with flow control valves, one at the outlet and one in a bypass line. These are used in combination, to prevent thermal shock to the heat exchanger, while controlling the rate of cooldown and total return flow.

The RHR heat exchangers also function as part of the ECCS (see Subsection 6.3.3).

Residual Heat Removal System Valves

Valves that perform a modulating function are equipped with two sets of packings and an intermediate leakoff connection that discharges to the recycle holdup tank.

Manual and motor-operated valves have backseats to facilitate repacking and to limit stem leakage when the valves are open. Leakage connections are provided where required by valve size and fluid conditions.

5.4.7.2.3 Control

An analysis has been conducted to confirm the capability of the RHRS relief valve to prevent overpressurization in the RHRS. All credible events were examined for their potential to overpressurize the RHRS. These events included normal operating conditions, infrequent transients, and abnormal occurrences. The analysis confirmed that one relief valve has the capability to keep the RHRS maximum pressure within code limits.

The most severe credible overpressure transient is the mass input transient resulting from one centrifugal charging pump operating in an unthrottled condition with flow to the RCS while letdown flow is isolated. The capacity of a single RHRS inlet relief valve is sufficient to satisfy RHRS overpressure requirements for this transient during the hot shutdown and cold shutdown operational modes. Procedures and administrative controls ensure that more severe RHRS overpressure transients do not occur during RHRS operation. Since it is possible that the plant may operate in the cold shutdown mode for an extended period of time, the RHRS inlet relief valve capacity has been verified sufficient to provide overpressure protection during this mode for the mass input transient resulting from two centrifugal charging pumps operating in an unthrottled condition with flow to the RCS while letdown is isolated.

The RHRS is designed with overpressure protection provisions to prevent RHRS pressure from exceeding 110% of design assuming the most severe credible overpressure transient at low temperature. Each inlet line to the RHRS is equipped with a relief

valve to prevent RHRS overpressurization during plant heatup, cooldown, and cold shutdown decay heat removal operation. At the set pressure of 450 psig, each RHRS inlet relief valve has a minimum relief capacity of 475 gpm at a fluid temperature of 375°F. At fluid temperatures below 200°F, each RHRS inlet relief valve has a minimum relief capacity of 675 gpm. Each discharge line from the RHRS to the RCS is equipped with a pressure relief valve to relieve the maximum possible back-leakage through the valves separating the RHRS and the RCS. Each of the RHRS discharge lines to the RCS cold legs has a relief valve capable of relieving 400 gpm at a set pressure of 600 psig. A relief valve designed for 20 gpm and a set pressure of 600 psig is provided on the RHRS line used for hot leg recirculation. These relief valves are located in the ECCS (see Drawing M-61). The fluid discharge by the suction side relief valves and the discharge side relief valves is collected in the recycle holdup tank of the boron recycle system.

To mitigate the severity and minimize the frequency of any RCS overpressurization, an automatic pressure relief system is provided to maintain RCS pressures within allowable limits of pressure at a given temperature (see Subsection 7.6.9). This RCS automatic pressure relief system provides backup overpressure protection for the RHRS during operation at temperatures below 350°F.

The design of the RHRS includes two motor-operated gate isolation valves in series on each inlet line between the high-pressure RCS and the low-pressure RHRS. They are closed during normal operation and are only opened for residual heat removal during a plant cooldown after the RCS pressure is reduced to approximately 360 psig or lower and RCS temperature is reduced to approximately 350°F. During plant startup, the inlet isolation valves are shut administratively. However, an alarm is provided to alert the operator in the event that double isolation is not being maintained when RCS pressure increases above 400 psig. These isolation valves are provided with "prevent-open" interlocks, which are designed to prevent possible exposure of the RHRS to normal RCS operating pressure. A check valve in parallel with each inner isolation valve is provided for overpressure protection of the isolated section of piping between the two valves, except Braidwood valve 1RH8701B, which has 2 check valves in series. The check valve(s) also provides backflow protection from the RCS to the RHRS. While both check valves in parallel with Braidwood valve 1RH8701B are required to open to provide overpressure protection, only one is required to close to prevent backflow.

The two inlet isolation valves in each residual heat removal subsystem are separately and independently interlocked with pressure signals to prevent being opened whenever the RCS pressure is greater than approximately 360 psig.

The use of two independently powered motor-operated valves in each of the two inlet lines, along with two independent pressure interlock signals in the opening and alarm circuitry ensures a design which meets applicable single failure criteria. Not only more than one single failure but also different failure mechanisms must be postulated to defeat the function of preventing possible exposure of the RHRS to normal RCS operating pressure. These protective interlock designs, in combination with plant operating procedures, provide diverse means of accomplishing the protective function. For further information on the instrumentation and control features, see Subsection 7.6.2.

The RHR inlet isolation valves are provided with red-green position indicator lights on the main control board.

Isolation of the low-pressure RHRS from the high-pressure RCS is provided on each RHRS discharge path to the RCS cold legs by two check valves in series. These valves are periodically tested to verify that each of the series check valves can independently sustain a differential pressure across its disc and to verify that the valve is in the closed position (see Subsection 6.3.4.2).

The normally open motor-operated valve located outside containment in each RHRS discharge header can be closed if unacceptable intersystem leakage develops across the two series check valves. This provides positive isolation of intersystem leakage as the plant is shut down to correct the problem.

Although not used for RHRS operation, a discharge header to the RCS hot leg is provided for ECCS operation. Isolation of the low-pressure RHRS from the high-pressure RCS is provided on the RHRS discharge path to the RCS hot legs by two check valves in series inside containment and a normally closed motor-operated valve outside containment. These valves are not part of the RHRS. They are shown as part of the ECCS in Drawing M-61. Their testing is described in Subsection 6.3.4.2.

5.4.7.2.4 Applicable Codes and Classifications

The entire RHRS is designed as Seismic Category I. Component codes and classifications are given in Section 3.2.

5.4.7.2.5 System Reliability Considerations

General Design Criterion 34 requires that a system to remove residual heat be provided. The safety function of this system is to transfer fission product decay heat and other residual heat from the core at a rate sufficient to prevent exceeding fuel or pressure boundary design limits. Safety grade systems are provided in the plant design, both NSSS scope and BOP scope, to

perform this safety function. The NSSS scope safety grade systems which perform this function, for all plant conditions except a LOCA, are: the reactor coolant system (RCS) and steam generators (which operate in conjunction with the auxiliary feedwater system, the steam generator safety

valves, and the steam generator power-operated relief valves); and the residual heat removal (RHRS) which operates in conjunction with the component cooling water system and the service water system. The BOP scope safety grade systems which perform this function, for all plant conditions except LOCA, are: the auxiliary feedwater system, the steam generator safety valves, and the steam generator power-operated relief valves, which operate in conjunction with the reactor coolant system and the steam generators; and the component cooling water and service water systems, which operate in conjunction with the RHRS. For LOCA conditions, the safety grade system which performs the function of removing residual heat from the reactor core is the ECCS, which operates in conjunction with the component cooling water system and the service water system.

The auxiliary feedwater system, along with the steam generator safety valves and steam generator power-operated relief valves, provides a completely separate, independent, and diverse means of performing the safety function of removing residual heat, which is normally performed by the RHRS when RCS temperature is less than 350°F. The auxiliary feedwater system is capable of performing this function for an extended period of time following plant shutdown. The water sources available to the auxiliary feedwater system, the quantities of water that they provide, and the duration of shutdown cooling that they provide are described in Subsection 10.4.9.

To ensure reliability, each RHR pump is connected to a different vital bus. Each RHR train is isolated from the RCS on the suction side by two motor-operated valves in series. Each motor-operated valve receives power via a separate motor control center and the two valves in series in the same train receive their power from a different vital bus. Exposure of the RHRS to the normal operating pressure of the RCS is prevented by interlocks on each suction isolation valve which do not allow the valves to be opened whenever the RCS pressure is greater than approximately 360 psig. The valves are administratively closed during plant startup. However, an alarm is provided in the event that double isolation is not being maintained and RCS pressure increases above 400 psig. In addition, valve position indication is available on the MCB.

RHRS operation for normal conditions and for major failures is accomplished completely from the control room. The redundancy in the RHRS design provides the system with the capability to maintain its cooling function even with major single failures, such as a failure of an RHR pump, valve, or heat exchanger since the redundant train can be used for continued heat removal.

Although such major system failures are within the system design-basis, there are other less significant failures which can prevent opening of the RHRS suction isolation valves from the control room. Since these failures are of a minor nature, improbable to occur, and easily corrected outside the control room, with ample time to do so, they have been realistically excluded from the engineering design-basis. Such failures are not likely to occur during the limited time period in which

they can have an effect (i.e., when opening the suction isolation valves to initiate RHRS operation); however, even if they should occur, they have no adverse safety impact and can be readily corrected. The only consequence is some delay in initiating RHRS operation, while action is taken to open the RHRS suction isolation valves. In such a situation, the auxiliary feedwater system and steam generator power-operated relief valves can be used to perform the safety function of removing residual heat and in fact can be used to continue the plant cooldown below 350°F, until the RHRS is made available.

One failure of this type is a failure in the interlock circuitry which is designed to prevent exposure of the RHRS to the normal operating pressure of the RCS (see Subsection 5.4.7.2.3). In the event of such a failure, RHRS operation can be initiated by defeating the failed interlock through corrective action at the solid-state protection system cabinet or at the individual affected motor control centers.

The other type of failure which can prevent opening the RHRS suction isolation valves from the control room is a failure of an electrical power train. Such a failure is extremely unlikely to occur during the few minutes out of a year's operating time during which it can have any consequence. If such an unlikely event should occur, several alternatives are available. The more realistic approach would be to obtain restoration of offsite power, which can be expected to occur in less than 1/2 hour. Other alternatives are to restore the emergency diesel-generator to operation or to bring in an alternate power source. The alternate power sources for the RHR suction valves are the other unit's offsite source and diesel-generators. The Unit 1 offsite power source and diesel-generators are completely independent of the Unit 2 offsite power source and diesel-generators. However, unit-to-unit bus ties exist for each of the ESF buses. Operator action at the main control is required to make the necessary bus transfers.

If the operator elects to initiate RHRS operation during a power train failure and the containment is accessible, one of the failed RHRS suction isolation valves can be opened by local manual action via the valve handwheel.

If the operator elects to initiate RHRS operation during a power train failure and elects not to access containment, the failed RHRS isolation valves can be opened through the use of alternate power supplies. The alternate power supply only needs to be provided to one of the four RHRS suction isolation valves aligned to the failed electrical train for the time needed to actuate the valve. Such an alternate power supply capability is provided for in the plant design by the use of a temporary power source or the alternate Class 1E 480-V power source. The temporary power supply arrangements permit one suction isolation valve in each RHRS train to be transferred,

through the use of limited operator action outside the control room in accessible areas of the plant, from its normal power supply to a temporary power supply.

The RHRS, redundant fluid flow Train A suction isolation valve RH8701A is supplied at all times with power from Class 1E 480-V Bus A. Suction isolation valve RH8701B is normally supplied from Class 1E 480-V Bus B, but can be transferred using its temporary power supply arrangement to an alternate Class 1E power supply. This temporary power supply arrangement allows fluid Train A of the RHRS to be placed in operation even with an electrical system single failure, the failure of electrical power train B.

The RHRS, redundant fluid flow Train B suction isolation valve RH8702B is supplied at all times with power from Class 1E 480-V Bus B. Suction isolation valve RH8702A is normally supplied from Class 1E 480-V Bus A, but can be transferred using its temporary power supply arrangement to an alternate Class 1E power supply. This temporary power supply arrangement allows fluid train B of the RHRS to be placed in operation even with an electrical system single failure, the failure of electrical power train A.

The only impact of either of the above types of failures is some delay in initiating RHR operation, while action is taken to open the RHR suction isolation valves. This delay has no adverse safety impact because of the capability of the auxiliary feedwater system and steam generator power-operated relief valves to continue to remove residual heat, and in fact to continue plant cooldown.

A single-failure analysis employing failure mode and effects analysis (FMEA) methodology was conducted for the RHRS. Table 5.4-17 presents a summary of components included in the analysis. The analysis was limited to operation during a plant cooldown and was bounded by a constraint that only active components performing a fluid system flow function were to be analyzed. Data presented by the table demonstrate that an RHR subsystem can sustain the failure of any single active hydraulic component, and that the RHR will meet an acceptable level of performance for core cooling in a reasonable time period.

The consequences of an active failure during the shutdown cooling mode with RCS still sealed and only a single train of RHR in operation are as follows.

When the RCS is sealed and the RHRS is in operation during shutdown cooling, two separate and redundant trains are in operation for residual heat removal. Single train RHRS operation is normally utilized only if a failure has resulted in the unavailability of one train or if the RCS has been

cooled such that only one train is required to handle the existing heat load.

Each RHRS train is provided with an automatically controlled miniflow to protect the RHRS pump. Status indicating lights are provided at the control board for the RHRS pump, the RHRS suction isolation valves, and the miniflow isolation valves. These status lights supplement the RHRS low flow alarm at the control board to alert the operator to a low flow and potential loss of RHRS cooling condition.

Should a failure associated with an RHRS suction isolation valve or an RHRS pump occur during single train operation, adequate cooling could be provided by starting the redundant RHRS train. Since the RCS is assumed to still be sealed, the steam generators would be available for decay heat removal, if it became necessary.

The consequences of a passive failure of the RHRS piping during the shutdown cooling mode have been evaluated. The design of the system permits complete isolation of a faulted RHRS loop outside containment with no impact on plant safety.

The major portion of the RHRS is contained in the auxiliary building. Leakages resulting from a passive failure of the RHRS piping will be controlled by the floor drain system. The effects of leaks will be detected in the control room via the floor drain system alarms and area radiation monitoring alarms. Large leaks in the RHRS will be detected by interpretation of RHRS flow parameters, area radiation monitoring alarms, and high level alarms of the floor drain sumps. Small leaks will be alarmed in the control room by the area radiation monitors in the auxiliary building.

By interpretation of process parameters and alarms, the operators will determine the area where the leakage has occurred. Further information may be obtained by visual observation. Depending on the severity of the leak, the operator will make the determination of the proper course of action.

The RHRS design provides two separate and redundant trains of operational capability. Any single failure (i.e., passive failure of RHRS piping) that would prevent the use of one train of the RHRS will not compromise plant safety. The operational train would continue to remove the decay heat and sensible heat from the RCS and at no time would the reactor core be unprotected. The only consequence would be an extension of the cooldown time.

If a passive failure is to develop in RHRS, it is expected that it will develop during plant cooldown when the RHRS is operating at pressures and temperatures that approach RHRS design values.

If one RHRS pump is out of service and the alternate train becomes unavailable due to a passive failure during cooldown, the auxiliary feedwater system, along with the steam generator safety valves and steam generator power-operated relief valves, provides a completely separate, independent, and diverse means of performing the safety function of removing residual heat, which is normally performed by the RHRS when the RCS temperature is less than 350°F. The auxiliary feedwater system is capable of performing this function for an extended period of time following plant shutdown until the RHRS is made available.

When the steam generators are down for maintenance, the RCS is depressurized and the RHRS operates at steady-state pressure and temperature conditions significantly below the RHRS design values. Passive failures of magnitude that could affect RHRS operation are not expected to develop at these conditions.

However, if one RHRS pump is out of service and the steam generators are down for maintenance, the development of a passive failure in the remaining RHRS train would not make that train unavailable for residual heat removal since in-service inspections are conducted periodically and ASME "code-allowable" defects are not expected to grow appreciably during the life of the plant. A passive failure of the RHRS piping is not expected to produce a rapidly propagating crack that could result in a major break of a system pipe. Therefore, a detectable leakage crack is not expected to produce the effect of rendering an RHRS train inoperable. The operator would continue to use the RHRS train in conjunction with the chemical and volume control system. The centrifugal charging pump(s) will provide the makeup supply to compensate for the system inventory leakage.

Loss of RHRS cooling during maintenance activities and especially due to air entrainment in the system has been considered. The likelihood of air entrainment is a function of RCS water level and RHRS flow rate. If it is required that the water level be lowered to perform maintenance, the residual heat removal flow rate is reduced to within acceptable levels with consideration to the RCS water level. The residual heat removal flow rate can be reduced to a minimum value of 1000 gpm provided that the RCS temperature remains less than or equal to 140°F. Considerations for determining the necessary flow rate are as follows: (1) provide sufficient decay heat removal capability, (2) maintain the reactor coolant temperature rise through the core within design limits, for compliance with flow rates assumed in the boron dilution analysis, (3) prevent thermal and boron stratification in the core, (4) preclude cavitation of the reactor coolant downstream of the RHR control valve, and (5) ensure inadvertent boron dilution events can be identified and terminated by operator action prior to the reactor returning critical. Guidelines regarding the required RHR flow rate are provided in the plant operating procedures.

Should the water level above the RHRS inlet line become inadequate, air may be drawn into the suction piping and entrained in the fluid. Factors which minimize the effects of air entrainment on pump performance are as follows:

a. the location of the pumps provides net positive suction head on the pump inlet and

b. the circulation flow rate is kept as low as possible but greater than the minimum flow required for core decay heat removal.

Two redundant, independent level indicators and alarms on low level are provided on the main control board to monitor reactor vessel level during reduced inventory conditions. Differential pressure transmitters which utilize independent tap locations from bottom-mounted instrument guide tubes and pressurizer instrument sensing lines are used in the instrument loops.

Provisions have been made to minimize the potential for air entrainment during reduced inventory conditions. However, should a loss of decay heat removal event occur, actions will be taken in accordance with plant operating procedures to minimize the effects of such an event. A thermal hydraulic analysis has been performed to determine RCS behavior given a loss of decay heat removal event. This analysis was used as the basis for procedure development. Inventory makeup requirements are specified in plant operating procedures and are dependent on RCS configuration. Viable makeup sources are specified and include RWST gravity feed, SI pump hot leg injection, accumulator injection, steaming intact/nonisolated steam generators, etc. The results of the analysis conclude that in certain cases, i.e., the RCS is not adequately vented and a cold leg opening exists, at least one high head safety injection pump is required to prevent the core from uncovering. Therefore, the availability of at least one safety injection pump is required in Modes 5 and 6 with the pressurizer level less than or equal to 5% whenever the hot side of the RCS is not adequately vented.

Each RHRS pump has a seal cooler which is supplied with CCW as the sole cooling water source. The possibility of the loss of RHRS pumps has been evaluated. The design of the CCWS is such that no single failure could preclude the capability to supply CCW to at least one of the two RHRS pumps within the time required to prevent RHRS pump seal damage. Following loss of offsite power, continued CCW flow is ensured by automatic start of the inservice CCW pumps on the emergency electrical buses. Should a single operating CCW pump fail during normal operation, the backup CCW pump will start automatically on low CCW discharge header pressure to supply continued CCW flow. As a shared design (between Units 1 and 2), the CCWS provides the plant operator with the flexibility to align any one of five CCW pumps and three CCW heat exchangers to either of the independent supply headers to the RHRS pumps. Unit 2 CCWS equipment could provide CCW to Unit 1 RHRS pumps, if necessary. Local indication and a low flow alarm is provided at the CCW discharge from each RHRS pump. These instruments are not relied upon to ensure the safety of the plant and, therefore, are not specifically designed according to the criteria of IEEE 279. However, it is expected that they would be available to aid the operator in monitoring system conditions and diagnosing any problem that should occur. In addition, other indications are expected to be available to the operator. Main control board indication of the operating status of the CCW pumps is provided, and flow instruments in the CCW discharge from the RHRS heat exchangers would also provide main control board indication and alarm of loss of the CCW supply to the associated RHRS pump. In the unlikely event that CCW to one of the RHRS pumps was interrupted, the redundant RHRS subsystem could provide sufficient capability for accident mitigation and plant cooldown.

5.4.7.2.6 Manual Actions

The RHRS is designed to be fully operable from the control room for normal operation. Manual operations required of the operator are: closing the suction valves to the RWST, opening the suction isolation valves, positioning the flow control valves downstream of the RHRS heat exchangers, and starting the RHRS pumps.

Manual actions required outside the control room, under conditions of single failure, are discussed in Subsection 5.4.7.2.5.

5.4.7.2.7 System Operation

Reactor Startup

Generally, while at cold shutdown condition, decay heat from the reactor core is being removed by the RHRS. The number of pumps and heat exchangers in service depends upon the heat load at the time.

At initiation of the plant startup, the RCS is completely filled, and the pressurizer heaters are energized. The RHRS is operating and is connected to the CVCS via the low-pressure letdown line to control reactor coolant pressure. During this time, the RHRS acts as an alternate letdown path. The manual valves downstream of the residual heat exchangers leading to the letdown line of the CVCS are opened. The control valve in the line from the RHRS to the letdown of the CVCS is then manually adjusted in the control room to permit letdown flow.

After the reactor coolant pumps are started, the residual heat removal pumps are stopped but pressure control via the RHRS and the low-pressure letdown line is continued until the pressurizer steam bubble is formed. Indication of steam bubble formation is provided in the control room by the damping out of the RCS pressure fluctuations, and by pressurizer level indication. The RHRS is then isolated from the RCS and the system pressure is controlled by normal letdown and the pressurizer spray and pressurizer heaters.

Power Generation and Hot Standby Operation

During power generation and hot standby operation, the RHRS is not in service but is aligned for operation as part of the ECCS.

Reactor Cooldown

Reactor cooldown is defined as the operation which brings the reactor from no-load temperature and pressure to cold conditions.

The initial phase of reactor cooldown is accomplished by transferring heat from the RCS to the steam and power conversion system through the use of the steam generators.

When the reactor coolant temperature and pressure are reduced to approximately 350°F and 360 psig, approximately 4 hours after reactor shutdown, the second phase of cooldown starts with the RHRS being placed in operation.

Procedure and administrative controls associated with RCS pressure control during low temperature operation ensure that

severe RHRS overpressure transients do not occur. These procedures and administrative controls are discussed in Subsection 5.2.2.11.3 (Procedures) and include:

a. procedures which maximize the use of a pressurizer cushion (steam/nitrogen bubble) during periods of low pressure and low temperature operation, and

b. power lockout to the accumulator isolation valves (closed) at RCS conditions at or below 1000 psig and power lockout of the safety injection pumps and the nonoperating charging pumps at RCS temperature below 350°F (will be completed prior to reaching 330°F).

An exception is made in the case of power lockout to the safety injection pumps in that at least one safety injection pump must be available under certain circumstances to mitigate the consequences of a loss of decay heat removal event during reduced inventory conditions. However, in this case, cold overpressurization is not a concern because adequate air volume exists in the pressurizer which allows the operator time to react.

Startup of the RHRS includes a warmup period during which time reactor coolant flow through the heat exchangers is limited to minimize thermal shock. The rate of heat removal from the reactor coolant is manually controlled by regulating the reactor coolant flow through the residual heat exchangers. By adjusting the control valves downstream of the residual heat exchangers the mixed mean temperature of the return flows is controlled. Coincident with the manual adjustment, each heat exchanger bypass valve is automatically regulated to give the required total flow.

The reactor cooldown rate is limited by RCS equipment cooling rates based on allowable stress limits, as well as the operating temperature limits of the component cooling water system. As the reactor coolant temperature decreases, the reactor coolant flow through the residual heat exchangers is increased by adjusting the control valve in each heat exchanger's tube side outlet line.

As cooldown continues, the pressurizer is filled with water and the RCS is operated in the water solid condition.

At this stage, pressure control is accomplished by regulating the charging flow rate and the rate of letdown from the RHRS to the CVCS.

After the reactor coolant pressure is reduced, temperature is reduced to 140°F or lower, and RHR flow is established at 1000 gpm or greater, the RCS may be opened for refueling or maintenance.

Refueling

Both residual heat removal pumps are utilized during refueling to pump borated water from the refueling water storage tank to the refueling cavity. During this operation, the isolation valves in the inlet lines of the RHRS are closed, and the isolation valves to the refueling water storage tank are opened.

The reactor vessel head is lifted slightly. The refueling water is then pumped into the reactor vessel through the normal RHRS return lines and into the refueling cavity through the

open reactor vessel. The reactor vessel head is gradually raised as the water level in the refueling cavity increases. After the water level reaches the normal refueling level, the inlet isolation valves are opened, the refueling water storage tank supply valves are closed, and residual heat removal is resumed.

During refueling, the RHRS is maintained in service with the number of pumps and heat exchangers in operation as required by the heat load.

Following refueling, the residual heat removal pumps are used to drain the refueling cavity to the top of the reactor vessel flange by pumping water from the RCS to the refueling water storage tank.

Achieving Cold Shutdown

Byron/Braidwood is subject to the technical requirements of RSB 5-1 as they apply to Class 2 plants. Only partial compliance with the technical position is required where manual actions or repairs can be demonstrated to be an acceptable alternative to strict compliance. The safe shutdown design basis for Byron/ Braidwood is hot standby. The functional requirements of RSB 5-1 impose the following assumptions on the system(s) used to go to cold shutdown: a loss of offsite power, the most limiting single failure, and that only safety grade systems are available. Under these conditions, the plant is capable of being taken to cold shutdown within a reasonable amount of time provided that limited manual actions, as allowed by the recommended implementation for Class 2 plants, are performed. Residual heat removal system operation conditions (350°F, 360 psig) can be achieved within 36 hours, including the time required to perform any necessary actions while at hot standby. Cold shutdown conditions (T<200°F) can subsequently be achieved within 72 hours.

Means for performing key functions to achieve and maintain cold shutdown are described below. Table 5.4-18 provides a single failure evaluation of the systems required to perform these functions necessary to reach cold shutdown.

a. Coolant Circulation

Circulation of the reactor coolant can be provided by natural circulation with the reactor core as the heat source and the steam generators as the first heat sink and the residual heat removal pumps as a second heat sink.

b. Residual Heat Removal

The function of residual heat removal is performed in two stages in accomplishing the cooldown from hot standby to cold shutdown.

The first stage is from hot standby to 350°F. During this stage, circulation of the reactor coolant is provided by natural circulation with the reactor core as the heat source and the steam generators as the heat sink. Steam is initially released via the steam generator safety valves to maintain hot standby. This occurs automatically as a result of turbine and reactor trip. Steam release for cooldown continues via the steam generator atmospheric relief valves. As the cooldown proceeds, the operator adjusts these valves to increase the amount of steam dump to permit a reasonable cooldown rate. Feedwater makeup is provided by the auxiliary feedwater system.

The steam generator safety valves are Seismic Category I spring-loaded valves that can automatically maintain the plant in a safe hot standby condition for an extended period of time. The steam generator atmospheric relief valves are also seismically qualified. Should a single failure render one of the atmospheric dump valves inoperable, the plant could be cooled down to the RHRS initiation temperature via the three active loops. Additionally, the 8-inch manual valve upstream of the failed relief valve could be closed while the failed valve was repaired or replaced. Communications for any local operations would be made by the use of hand-held two-way radios.

The auxiliary feedwater system has sufficient alignment capability and flow capacity to ensure that feedwater can always be provided to all steam generators. A motor-driven pump is provided which feeds all four steam generators. A separate system incorporates a diesel-driven pump which can also supply feedwater to all four steam generators.

The auxiliary feedwater system is capable of providing feedwater for an extended period of time. The primary source of feedwater is the condensate storage tank which has a minimum useable volume that exceeds 212,000 gallons. Backup is provided from the Seismic Category I service water system. In the unlikely event that sufficient auxiliary feedwater was not available in the condensate storage tank, the pump suction is automatically switched to the backup source of essential service water.

The status of each steam generator can be monitored using safety-related instrumentation located in the control room. Separate indication channels for both steam generator pressure and water level are available.

The second stage is from 350°F to cold shutdown. During this stage, the RHRS is brought into operation. Circulation of the reactor coolant is provided by the RHRS pumps and the heat exchangers in the RHRS act as the means of heat removal from the RCS. In the RHRS heat exchangers, the residual heat is transferred to the component cooling water system, which ultimately transfers the heat to the essential service water system.

The RHRS is a fully redundant system. The RHRS includes two RHR pumps and two RHRS heat exchangers. Each RHR pump is powered from a different emergency power train and each RHRS heat exchanger is cooled by a different component cooling water system loop. The component cooling water and the design essential service water systems are both designed to Seismic Category I. If any component in one of the RHRS subsystems were rendered inoperable as the result of a single failure, cooldown of the plant would not be compromised; however, the time for cooldown would be extended. The operation of the RHRS can be monitored using instrumentation in the control room. There is indication of the pump discharge flow operating status and the component cooling flow from the discharge of the RHRS heat exchangers.

c. Boration and Inventory Control

Boration is accomplished using portions of the chemical and volume control system (CVCS). The boric acid transfer pumps supply 4 wt.% percent boric acid from the boric acid tanks to the suction of the centrifugal charging pumps which inject the borated water into the reactor coolant system (RCS) via the normal charging and/or reactor coolant pump seal injection flow paths. Makeup in excess of that required for boration can be provided from the refueling water storage tank (RWST) using the centrifugal charging pumps and the same injection flow paths as described for boration. Two motor-operated valves, each powered from different emergency diesels and connected in parallel, transfer the suction of the charging pumps to the RWST.

The two boric acid tanks, three boric acid transfer pumps, two centrifugal charging pumps, and the associated piping are of Seismic Category I design. There is sufficient boric acid capacity in the boric acid tanks to provide for a cold shutdown with the most reactive rod withdrawn. The centrifugal charging pumps are train oriented and can be loaded on the emergency diesels. The boric acid system has three boric acid transfer pumps per station (OAB03P, 1AB03P and 2AB03P). Normally, one transfer pump (1AB03P and 2AB03P respectively) is aligned with each unit's boric acid tank. The third transfer pump (OAB03P) is installed as a spare and can serve either unit. Byron/ Braidwood are licensed as "hot shutdown" or Class 2 plant in accord with Branch Technical Position RSB 5-1. Although the pumps are normally powered from non-ESF buses (133 and 233 respectively), they can be powered from ESF buses (141 and 241 respectively) by closing a cross tie breaker. Should a common valve make both the normal and alternate charging lines unavailable, the reactor coolant pump seal injection flow would be sufficient for boration. The RCS can be borated to the cold shutdown concentration by accommodating the boration flow in the steam space of the pressurizer and in the space made available as the RCS shrinks due to cooling. Boration to cold

shutdown without letdown is possible using systems and equipment listed in Table 5.4-19 and is discussed below.

Boration and makeup can be monitored using instrumentation in the control room. Indications available include boric acid transfer, centrifugal charging pump operating status, and boric acid tank and RWST water level. This water level instrumentation is safety-related. Sampling can be done continuously or intermittently from several sampling connections in the normal letdown path, if it is available, or from two separate RCS hot legs. In the worst case situation, the amount of boron injected can be calculated by monitoring the inventory in the boric acid tanks.

d. Boration for Cold Shutdown Without Letdown

The plant is maintained in a hot standby condition while the operator evaluates the initial plant conditions and the availability of equipment and systems (including non-safety grade equipment) that can be used in shutdown. Prior to initiating cooldown, the operator will determine the boration requirements and the method by which the plant can be taken to cold shutdown. In performing the cooldown, the operator integrates the functions of heat removal, boration and makeup, and depressurization, attempting to accomplish these functions without letdown from the RCS. Once the plant is cooled to 350°F and depressurized to 360 psig, RHRS operation is initiated and after a warm-up period for the RHR pump of up to one hour, the RCS is taken to cold shutdown conditions.

A natural circulation cooldown analysis (Reference 14) demonstrating the feasibility of reaching cold shutdown conditions without the use of letdown has been performed for the Byron/Braidwood plants. For this scenario it is assumed that a seismic event occurs resulting in loss-of-offsite power and failure of any non-safety, non-seismically qualified equipment. A realistic scenario might include attempts to reestablish some non-safety related equipment, but here it is assumed that all non-safety related equipment is lost throughout. Since instrument air is considered non-safety grade, affected equipment fails in the safe position (e.g., letdown isolates, the charging flow control valve fails open, but the air-operated valves to the regenerative heat exchangers fail closed). The following equipment is credited for recovery:

- Steam relief via the steam generator safety valves and three of four steam generator power operated relief valves (SG PORVs),

- Feedwater addition using one of two Auxiliary Feedwater (AFW) pumps,
- Boration using one of two centrifugal charging pumps,
- Reactor Coolant System (RCS) pressure relief via one of two pressurizer power operated relief valves (PZR PORVs), and
- Cooldown to cold shutdown using one of two RHR trains.

This list of equipment is consistent with Table 5.4-19, Summary of Systems and Equipment Required for Cold Shutdown Boration without Letdown. Operator actions taken in this scenario are as per instructed in the emergency procedures for reactor trip response and natural circulation cooldown and the abnormal procedure for loss of instrument air.

As a result of the initiating event, makeup is limited to RCP seal injection flow. These lines remain open and initially allow high flow due to failure of the charging flow control valve. After 30 minutes, it is assumed that an operator locally controls seal injection within its normal range as per procedures. The charging pump, initially aligned to the Volume Control Tank (VCT) at the time of reactor trip, automatically aligns to the RWST shortly after the trip when the VCT reaches the emergency low level setpoint. In accordance with Emergency Procedures, the reactor is assumed to be maintained in hot standby for a maximum of 2 hours.

Boration without Letdown using the Refueling Water Storage Tank

A conservative analysis (Reference 14) has been completed crediting the Refueling Water Storage Tank (RWST) as the source of boration. The normal and preferred source of boration is from the Boric Acid Tank (BAT), but the BAT is assumed unavailable for this analysis. The source of the borated water determines how fast the RCS can be borated during the transient. Boration from the RWST at approximately 2000 ppm provides much less boration than the BAT at approximately 7000 ppm.

Following reactor trip and initiation of the cooldown, the control rods aided by Xenon-135 buildup (from Iodine-135 decay) provide negative reactivity to maintain adequate shutdown margin. For xenon-free cold shutdown conditions, it is sufficient to increase the boron concentration by about 600 to 700 ppm, depending only slightly on time of core life. This requirement conservatively assumes the most reactive rod is stuck (does not enter the core) and that at least 1.3% (1300 pcm) shutdown margin is maintained. Based on the initial critical boron concentration modeled (~58 ppm, corresponding to a burn-up near EOL), the core will be adequately shutdown for cold xenon-free conditions when the RCS boron concentration is increased to about 700 ppm. As it was demonstrated, the RCS average boron concentration at the time RHR cut-in conditions are established (at the end of the 9 hrs. 50 min.) is approximately 350 ppm and is increasing at a constant rate of 25 ppm/hr. At this boration rate, which is reduced due to being aligned to the RWST rather than the BAT, xenon-free cold shutdown conditions would be established at approximately 24 hours into the event. It was demonstrated that during this time the negative reactivity addition from xenon buildup assures that the core remains subcritical.

The analysis shows that the RHR system is placed in service at 9.9 hours into the event and, based on a bounding single train RHR cooldown calculation, cold shutdown will then be achieved at about 61.5 hours. The cooldown times are well within the stated objectives of <36 hours (to RHR entry) and <72 hours (to cold shutdown), mentioned earlier in this Section.

The Condensate Storage Tank (CST) inventory used in the 9.9 hours prior to placing RHR in service is 210,000 gallons, which is less than the water volume that is required to be maintained in the CST. The pressurizer level was maintained on span during the entire cooldown. Thus, this case is considered a successful demonstration of RSB 5-1 compliance and confirms the capability to recover and borate to cold shutdown without letdown.

e. Depressurization

As noted in Table 5.4-19, there are two methods of depressurization available to the operator: either the CVCS auxiliary spray or the pressurizer PORVs.

The centrifugal charging pumps in the CVCS are Seismic Category I pumps and are powered from the ESF buses. The auxiliary spray valve is an air-operated valve as are other valves in the flow path. In the event of a seismic event or a loss of offsite power event where air is lost to the valves, every effort will be made to either open the valves with a portable gas cylinder or load the air compressors onto the emergency buses.

As an alternative, depressurization could be accomplished by discharging RCS inventory from the pressurizer to containment via the pressurizer power-operated relief valves. This operation can be integrated with the cooldown function near the end of the cooldown to 350°F. As RCS inventory is relieved to the containment, the pressurizer temperature and pressure is reduced, thus reducing the pressure in the RCS. Makeup is provided as necessary to maintain a minimum level in the pressurizer. RCS pressure and temperature and pressurizer level can be monitored using safety-related instrumentation in the control room. The air accumulator tanks for the Pressurizer PORVs have been shown to have adequate capacity to support the operation of the PORVs in support of the Reference 14 analysis.

The PRT, as described in Subsection 5.4.11, is designed to absorb a discharge of steam equivalent to 110% of the full power pressurizer steam volume without exceeding pressure and temperature design values.

The volume of steam vented from the pressurizer to depressurize the plant from a hot standby to a cold shutdown condition is not necessarily less than the volume of steam at 110% power. However, the rate of release is significantly lower and can be controlled to ensure that the integrity of the PRT is maintained. The depressurization operation can be halted at any time to cool the PRT, which allows a greater volume of steam to be discharged without compromising the integrity of the PRT. Hence, it is concluded that depressurization via the PORVs will not cause an environment in the containment that is adverse to the operation of the PORVs. A precaution in the procedures states that the integrity of the PRT must be maintained during this mode of depressurization. The ability to depressurize

using the PORVs without rupturing the PRT was demonstrated on the Byron/Braidwood simulator.

If such ability cannot be demonstrated, confirmation will be provided that the PORVs will function in the containment environment that is expected in achieving cold shutdown.

f. Instrumentation

Safety-related instrumentation is available in the control room to monitor the key functions associated with achieving cold shutdown. This instrumentation is discussed in Section 7.5 and includes the following:

a. RCS wide range temperature,

b. RCS wide range pressure,

c. pressurizer water level,

d. steam generator water level (per steam generator),

e. steamline pressure (per steamline),

f. RWST level,

g. boric acid tank level (per boric acid tank), and

h. containment pressure.

This instrumentation is sufficient to monitor the key functions associated with cold shutdown and to maintain the RCS within the desired pressure, temperature, and inventory relationships. Operation of the auxiliary systems which service the RCS can be monitored by the control room operator, if desired, via remote communication with an operator in the plant.

General operating procedures for the plant are maintained. Specific emergency procedures of interest to shut down include the following:

a. Reactor Trip,

b. Reactor Trip Recovery,

c. Natural Circulation Cooldown,

d. Post-LOCA Cooldown and Depressurization, and

e. Loss of AC.

g. Pressure Relief Requirements

The RHR system is protected against accidental over pressurization when it is in operation (not isolated from the RCS) by relief valves with relieving capacity in accordance with the ASME Boiler and Pressure Vessel Code. UFSAR Section 5.4.7.2.3 provides details on the most limiting pressure transient considered.

Branch Technical Position RSB 5-1 states that fluid discharged through the RHR system pressure relief valves must be collected and contained such that a stuck open relief valve will not: (c) Result in a non-isolatable situation in which the water provided to the RCS to maintain the core in a safe condition is discharged outside of containment.

Byron/Braidwood is subject to the technical requirements of RSB 5-1 as they apply to Class 2 plants. For Class 2 plants, compliance with the collection and containment of the relief discharge is not required if it is shown that adequate alternate methods of disposing of discharge are available.

The fluid discharge by the RHR suction side relief valves and the discharge side relief valves is collected in the recycle holdup tank of the boron recycle system. The recycle holdup tank is located outside of containment. An analysis has been made to evaluate the Recycle Holdup Tank response to the opening of a relief valve. The following inputs and assumptions were used in the analysis:

- Input to the Recycle Holdup Tank (HUT) is based on relieving RCS fluid at 465 psia and 375°F.
- The analysis is based on the most limiting event of a letdown/charging flow mismatch with one charging pump running at the equivalent of 475 gpm and 375°F.
- Operator action is assumed to be taken to within 30 minutes to allow the relief valve to close or to isolate the relief valve.
- Initial liquid level in the HUT aligned to receive input from RH relief valve is assumed to ≥ 40%. This level provides a quench of the input from the relief valves. When RH is aligned for shutdown cooling and the RCS temperature is above 200°F the level in the HUT aligned to receive input from the RH relief valves is administratively controlled above 40%.

The analysis indicates the pressure in the HUT remains below the tank design pressure. As discussed in UFSAR Section 15.7.2.3.2 this potential input of RCS water directly into the HUT is considered in the dose analysis of a postulated tank failure.

5.4.7.3 Performance Evaluation

The performance of the RHR system in reducing reactor coolant temperature is evaluated through the use of heat balance calculations on the reactor coolant system, and the component cooling water system at stepwise intervals following the initiation of RHR operation. Heat removal through the RHR and CCW heat exchangers is calculated at each interval by use of standard water-to-water heat exchanger performance correlations; the resultant fluid temperatures for the RHR and CCW systems are calculated and used as input to the next interval's heat balance calculation.

Assumptions utilized in the series of heat balance calculations describing plant RHR cooldown are as follows:

a. RHR operation is initiated 4 hours after reactor shutdown.

b. RHR operation begins at a reactor coolant temperature of 350°F.

c. Thermal equilibrium is maintained throughout the reactor coolant system during the cooldown.

d. Component cooling water temperature during cooldown is limited to a maximum of 120°F.

e. Reactor operating power is 3658 MWt.

f. Cumulative reactor operating time prior to shutdown of 16,000 hours.

g. Decay heat input for each time period is based on the Westinghouse standard residual decay heat model.

h. The RCS cooldown rate is limited to 100°F/hr.

Cooldown curves calculated using this method are provided for the case of all RHR components (Figure 5.4-6) and for the case of a single train RHR cooldown (Figure 5.4-7). These curves are based on the replacement steam generators.

The maximum cooldown rate which can result if both RHR flow control valves and both RHR bypass valves all simultaneously fail in such a manner as to permit maximum flow through the RHR heat exchangers (a low probability event considering the few hours a year when it could cause any effect) depends on several factors including the RHR flow rates and temperatures and other heat loads on the component cooling water system. One of the key factors is the RCS temperature, since the heat removal rate depends on the temperature differential between the RHR (RCS) flow and the component cooling water flow in the RHR heat exchanger. Even with the maximum flow through the RHR heat exchangers, it is typically impossible to maintain a cooldown rate as high as 100°F/hr when the RCS temperature is less than 250°F.

For the Byron/Braidwood projects, with 40°F service water temperature (design is 100°F), maximum flow through the RHR heat exchangers at the instant of initiating RHR operation, assuming no operator action was taken, the cooldown rate would not exceed 150°F over the first hour. Typical calculations have been performed which show that resultant stresses are within

Appendix G limits of the ASME Code Section III for a cooldown rate of 200°F/hr at temperatures above 250°F.

Although such a hypothetical cooldown event is acceptable from a stress standpoint, assuming no operator action, it should be noted that the operator can significantly limit the maximum possible cooldown rate by merely stopping one of the RHR pumps.

5.4.7.4 Tests and Inspections

The RHRS is normally used during the latter stages of normal reactor cooldown and when the reactor is held at cold shutdown for core decay heat removal. However, during all other plant operating periods, it is aligned to perform the low head injection function of the ECCS. Due to the dual function of the RHRS, tests and inspections are discussed in Subsection 6.3.4. Preoperational testing of the RHRS is addressed in Chapter 14.0. To implement the periodic component testing requirements, technical specifications have been established. Test frequency, acceptability of testing and measured parameters are contained in the inservice inspection program which is not part of the UFSAR. ECCS components and systems are designed to meet the intent of ASME Code Section XI for inservice inspection. Section 6.6 describes the inservice inspection program for Quality Group B and C components.

The plant design provides the capability for conducting natural circulation cooldown tests if required. However, because of the great similarity in design between all Westinghouse pressurized water reactors, Byron/Braidwood can reference those tests conducted at another unit rather than conducting such tests on the Byron/Braidwood project.

Byron/Braidwood and Diablo Canyon Unit 1 have been compared in detail to ascertain any differences between the two plants that could potentially affect natural circulation flow and attendant boron mixing. Because of the similarity between the plants, it was concluded that the natural circulation capabilities would be similar and, therefore, the results of prototypical natural circulation cooldown tests being conducted at Diablo Canyon will be representative of the capability at Byron/Braidwood.

The general configuration of the piping and components in each reactor coolant loop is the same in both Byron/Braidwood and Diablo Canyon. The elevation head represented by these components and the system piping is similar in both plants.

To compare the natural circulation capabilities of Byron/Braidwood and Diablo Canyon, the hydraulic resistance coefficients were compared. The coefficients were generated on a per loop basis. The hydraulic resistance coefficients applicable to normal flow conditions are shown in Tables 5.4-22 and 5.4-23.

The general arrangement of the reactor core and internals is the same in Byron/Braidwood and Diablo Canyon. The coefficients indicated represent the resistance seen by the flow in one loop.

The reactor vessel outlet nozzle configuration for both plants is the same. The radius of curvature between the vessel inlet nozzle and downcomer section of the vessel on the two plants is different. Based on 1/7 scale model testing performed by Westinghouse and other literature, the radius on the vessel nozzle/vessel downcomer juncture influences the hydraulic resistance of the flow turning from the nozzle to the downcomer. The Diablo Canyon vessel inlet nozzle radius is significantly smaller than that of Byron/Braidwood, as reflected by the higher coefficient for Diablo Canyon.

The resistance coefficient for the RCS piping between the plants differs slightly due to the loop isolation valves on Byron/Braidwood. This difference in flow resistance has been taken into account in the loop resistance calculation.

Steam generator units were also compared to ascertain any variation that could affect natural circulation capability by changing the effective elevation of the heat sink or the hydraulic resistance seen by the primary coolant. It was concluded that there are no differences in the original design of the steam generators in the two plants that would adversely affect the natural circulation characteristics. Additionally, the replacement Unit 1 steam generators were evaluated to ascertain that they do not affect the ability to establish and maintain natural circulation.

As indicated, the difference between the total resistance coefficients for the two plants is insignificant. It is expected that the relative effect of the coefficients would be the same under natural circulation conditions such that the natural circulation loop flow rate for Byron/Braidwood would be within 2% of that for Diablo Canyon.

The coefficients provided reflect the flow rate and associated heat removal capability of an individual loop in the plant. The comparison, therefore, does not take into consideration the number of loops available nor the core heat to be removed. An evaluation of the Byron/Braidwood steam relief and auxiliary feedwater systems has been performed to demonstrate that cooling can be provided via two steam generators following the most limiting single active failure, i.e., the failure of an atmospheric relief valve.

Loop circulation flow is dependent on reactor core decay heat which is a function of time based on core power operating history. Under natural circulation flow conditions, flow into the upper head area will constitute only a small percentage of

the total core natural circulation flow and, therefore, will not result in an unacceptable thermal/hydraulic impedance to the natural circulation flow required to cool the core.

For typical four-loop plants (including Byron/Braidwood), there are two potential flow paths by which flow crosses the upper head region boundary in a reactor. These paths are the head cooling spray nozzles and the guide tubes. The head cooling spray nozzle is a flow path between the downcomer region and the upper head region. The temperature of the flow which enters the head via this path corresponds to the cold leg value (i.e., T_{cold}). Fluid may also be exchanged between the upper plenum region (i.e., the portion of the reactor between the upper core plate and the upper support plate) and the upper head region via the guide tubes. Guide tubes are dispersed in the upper plenum region from the center to the periphery. Because of the nonuniform pressure distribution at the upper core plate elevation and the flow distribution in the upper plenum region, the pressure in the guide tube varies from location to location. These guide tube pressure variations create the potential for flow to either enter or exit the upper head region via the guide tubes.

To ascertain any difference between the upper head cooling capabilities between Diablo Canyon and Byron/Braidwood, a comparison of the hydraulic resistance of the upper head regions was made. These flow paths were considered in parallel to obtain the results as shown in Table 5.4-23.

As indicated in Table 5.4-22, the effective hydraulic resistance to flow in Byron/Braidwood is slightly less than Diablo Canyon. Assuming that the same pressure differential existed in both plants, the Byron/Braidwood head flow rate would be 112% of the Diablo Canyon flow.

It can, therefore, be concluded that the results of the natural circulation cooldown tests performed at Diablo Canyon are representative of the natural circulation and boron mixing capability of Byron/Braidwood. The results of these tests have been reviewed by the NRC for applicability. Based on the review of the similarities between Byron/Braidwood and Diablo Canyon, the NRC has concluded that Byron and Braidwood have demonstrated that the Diablo Canyon natural circulation tests are applicable to Byron/Braidwood and that they comply with the requirements of BTP RSB 5-1 (Reference 13).

5.4.8 Reactor Water Cleanup System (BWRs Only)

Not applicable to the Byron/Braidwood design.

5.4.9 Main Steam Line and Feedwater Piping

Main steam line and feedwater piping does not form part of the RCPB on PWRs. Therefore, this section is not applicable to the Byron/Braidwood Stations.

5.4.10 Pressurizer

5.4.10.1 Design Bases

The general configuration of the pressurizer is shown in Figure 5.4-5. The design data of the pressurizer are given in Table 5.4-9. Codes and material requirements are provided in Section 5.2.

The pressurizer provides a point in the reactor coolant system (RCS) where liquid and vapor can be maintained in equilibrium under saturated conditions for pressure control purposes.

5.4.10.1.1 Pressurizer Surge Line

The surge line is sized to limit the pressure drop between the RCS and the safety valves with maximum allowable discharge flow from the safety valves. Overpressure of the RCS does not exceed 110% of the design pressure.

The pressurizer surge line nozzle diameter is given in Table 5.4-9 and the pressurizer surge line dimensions are shown in Drawings M-60 and M-135.

5.4.10.1.2 Pressurizer Volume

The volume of the pressurizer is equal to, or greater than, the minimum volume of steam, water, or total of the two which satisfies all of the following requirements:

a. The combined saturated water volume and steam expansion volume is sufficient to provide the desired pressure response to system volume changes.

b. The water volume is sufficient to prevent the heaters from being uncovered during a step load increase of 10% at full power.

c. The steam volume is large enough to accommodate the surge resulting from 50% reduction of full load with automatic reactor control and 40% steam dump without the water level reaching the high level reactor trip point.

d. The steam volume is large enough to prevent water relief through the safety valves following a loss of load with the high water level initiating a reactor trip, without reactor control or steam dump.

e. The pressurizer will not empty following reactor trip and turbine trip.

f. The emergency core cooling signal is not activated during reactor trip and turbine trip.

5.4.10.2 Design Description

5.4.10.2.1 Pressurizer Surge Line

The pressurizer surge line connects the pressurizer to one reactor hot leg. The line enables continuous coolant volume pressure adjustments between the RCS and the pressurizer.

5.4.10.2.2 Pressurizer Vessel

The pressurizer is a vertical, cylindrical vessel with hemispherical top and bottom heads constructed of carbon steel, with austenitic stainless steel cladding on all surfaces exposed to the reactor coolant. A stainless steel liner is used on the pressurizer spray nozzle.

The surge line nozzle and removable electric heaters are installed in the bottom head. The heaters are removable for maintenance or replacement. A screen at the surge line nozzle and baffles in the lower section of the pressurizer prevent an insurge of cold water from flowing directly to the steam/water interface and assist mixing.

Spray line nozzles, relief and safety valve connections are located in the top head of the vessel. Spray flow is modulated by automatically controlled air-operated valves. The spray valves also can be operated manually by a switch in the control room.

A small continuous spray flow is provided through a manual bypass valve around the power-operated spray valves to minimize boron concentration differences between pressurizer liquid and reactor coolant and to prevent excessive cooling of the spray piping. These valves may be throttled closed, (due to designed leakage through the sprays) as long as the spray line temperature remains above the temperature alarm setpoint.

During an outsurge from the pressurizer, flashing of water to steam and generating of steam by automatic actuation of the heaters keep the pressure above the minimum allowable limit. During an insurge from the RCS, the spray system, which is fed from two cold legs, condenses steam in the pressurizer to prevent reaching the setpoint of the power-operated relief valves. Heaters are energized on high water level during insurge to heat the subcooled surge water that enters the pressurizer from the reactor coolant loop.

Material specifications are provided in Table 5.2-2 for the pressurizer and the surge line. Design transients for the components of the RCS are discussed in Subsection 3.9.1. Additional details on the pressurizer design cycle analysis are given in Subsection 5.4.10.3.5.

Pressurizer Support

The skirt type support is attached to the lower head and extends for a full 360° around the vessel. The lower part of the skirt terminates in the bolting flange with bolt holes for securing the vessel to its foundation. The skirt type support is provided with ventilation holes around its upper perimeter to assure free convection of ambient air for cooling past the heater and connector ends.

Pressurizer Instrumentation

Refer to Section 7.1 for details of the instrumentation associated with pressurizer pressure, level, and temperature.

Spray Line Temperatures

Temperatures in the spray lines from two loops are measured and indicated. Alarms from these signals are actuated by low spray water temperature. Insufficient flow in the spray lines will result in low spray line temperature alarms.

Safety and Relief Valve Discharge Temperatures

Temperatures in the pressurizer safety and relief valve discharge lines are measured and indicated. An increase in a discharge line temperature is an indication of leakage through the associated valve.

5.4.10.3 Design Evaluation

5.4.10.3.1 System Pressure

Whenever a steam bubble is present within the pressurizer, RCS pressure is maintained by the pressurizer. Analyses indicate that proper control of pressure is maintained for the operating conditions.

A safety limit has been set to ensure that the RCS pressure does not exceed the maximum transient value allowed under the ASME Code, Section III, and thereby assures continued integrity of the RCS components.

Evaluation of plant conditions of operation which follow indicate that this safety limit is not reached.

During startup and shutdown, the rate of temperature change is controlled by the operator. Heatup rate is controlled by reactor coolant pump energy and by the pressurizer electrical heating capacity.

When the pressurizer is filled with water, i.e., during initial system heatup, and near the end of the second phase of plant

cooldown, RCS pressure is maintained by the letdown flow rate via the residual heat removal system.

5.4.10.3.2 Pressurizer Performance

The pressurizer has a minimum free internal volume. The normal operating water volume at full load conditions is 60% of the free internal vessel volume. Under part load conditions, the water volume in the vessel is reduced for proportional reductions in plant load to 25% of free vessel volume at zero power level. The various plant operating transients are analyzed and the design pressure is not exceeded with the pressurizer design parameters as given in Table 5.4-9.

5.4.10.3.3 Pressure Setpoints

The RCS design and operating pressure together with the safety, power relief and pressurizer spray valves setpoints, and the protection system setpoint pressures are listed in Table 5.4-10. The design pressure allows for operating transient pressure changes. The selected design margin considers core thermal lag, coolant transport times and pressure drops, instrumentation and control response characteristics, and system relief valve characteristics.

In the event that any pressurizer relief valve (PORV) opens due to a failure in any pressure channel associated with normal PORV operation, the 2185 psig PORV interlock is provided to close the PORV as pressure decreases below the interlock pressure setpoint. The pressure signal associated with the interlock originates in the narrow range pressurizer pressure instrumentation. This signal and interlock operate completely independent of the cold overpressure pressure control signal, which originates in the wide range pressure instrumentation in the RCS loops. This independence of operation is illustrated in Drawing 108D685, Sheet 11, which shows the signals which enter an "OR" gate for operating the PORV. No interlock disabling system is required.

5.4.10.3.4 Pressurizer Spray

Two separate, automatically controlled spray valves with remote manual overrides are used to initiate pressurizer spray. In parallel with each spray valve is a manual throttle valve which permits a small continuous flow through both spray lines to reduce thermal stresses and thermal shock when the spray valves open, and to help maintain uniform water chemistry and temperature in the pressurizer. These valves may be throttled closed, (due to designed leakage through the sprays) as long as the spray line temperature remains above the temperature alarm setpoint. Temperature sensors with low alarms are provided in each spray line to alert the operator to insufficient bypass flow.

The layout of the common spray line piping to the pressurizer forms a water seal which prevents the steam buildup back to the control valves. The spray rate is selected to prevent the pressurizer from reaching the operating

setpoint of the power-operated relief valves during a step reduction in power level of 10% of full load.

The pressurizer spray lines and valves are large enough to provide adequate spray using as the driving force the differential pressure between the surge line connection in the hot leg and the spray line connection in the cold leg. The spray line inlet connections extend into the cold leg piping in the form of a scoop so that the velocity head of the reactor coolant loop flow adds to the spray driving force. The spray valves and spray line connections are arranged so that the spray will operate when one reactor coolant pump is not operating. The line may also be used to assist in equalizing the boron concentration between the reactor coolant loops and the pressurizer.

At Braidwood with less than three reactor coolant pumps operating, optimal pressurizer spray is obtained with the loop D RCP running (the loop with the pressurizer surge line). If the loop D RCP is idle, the spray flow will be marginal with other combinations of RCPs running.

A flow path from the chemical and volume control system to the pressurizer spray line is also provided. This additional facility provides auxiliary spray to the vapor space of the pressurizer during cooldown if the reactor coolant pumps are not operating. The thermal sleeves on the pressurizer spray connection and the spray piping are designed to withstand the thermal stresses resulting from the introduction of cold spray water.

5.4.10.3.5 Pressurizer Design Analysis

The occurrences for pressurizer design cycle analysis are defined as follows:

a. The temperature in the pressurizer vessel is always, for design purposes, assumed to equal saturation temperature for the existing RCS pressure, except in the pressurizer steam space subsequent to a pressure increase. In this case the temperature of the steam space will exceed the saturation temperature since an isentropic compression of the steam is assumed.

   The only exception of the above occurs when the pressurizer is filled solid during plant startup and cooldown.

b. The temperature shock on the spray nozzle is assumed to equal the temperature of the nozzle minus the cold leg temperature and the temperature shock on the surge nozzle is assumed to equal the pressurizer water space temperature minus the hot leg temperature.

c. Pressurizer spray is assumed to be initiated instantaneously to its design value as soon as the RCS pressure increases above 2275 psia. Spray is assumed to be terminated as soon as the RCS pressure falls below 2275 psia.

d. Unless otherwise noted, pressurizer spray is assumed to be initiated once per occurrence of each transient condition. The pressurizer surge nozzle is also assumed to be subject to one temperature transient per transient condition, unless otherwise noted.

e. At the end of each upset transient, the RCS is assumed to return to a no-load condition with the plant pressure and temperature conditions controlled within normal limits.

f. Temperature changes occurring as a result of pressurizer spray are assumed to be instantaneous. Temperature changes occurring on the surge nozzle are also assumed to be instantaneous.

g. Whenever spray is initiated in the pressurizer, the pressurizer water level is assumed to be at the no-load level.

5.4.10.4 Tests and Inspections

The pressurizer is designed and constructed in accordance with ASME Section III.

To implement the requirements of ASME Section XI the following welds are designed and constructed to present a smooth transition surface between the parent metal and the weld metal. The path is ground smooth for ultrasonic inspection.

a. Support skirt to the pressurizer lower head.

b. Surge nozzle to the lower head.

c. Nozzles to the safety, relief, and spray lines.

d. Nozzle to safe end attachment welds.

e. All girth and longitudinal full penetration welds.

f. Manway attachment welds.

The liner within the safe end nozzle region extends beyond the weld region to maintain a uniform geometry for ultrasonic inspection.

Peripheral support rings are furnished for the removable insulation modules.

The pressurizer NDE is given in Table 5.4-11.

5.4.11 Pressurizer Relief Discharge System

The pressurizer relief discharge system collects, cools, and directs for processing the steam and water discharge from the various safety and relief valves in the containment. The system consists of the pressurizer relief tank, the safety and relief valve discharge piping, the relief tank internal spray header and associated piping, the tank nitrogen supply, the gas vent connection, and the drain to the waste processing system.

5.4.11.1 Design Bases

Codes and materials of the pressurizer relief tank and associated piping are given in Section 5.2. Design data for the tank are given in Table 5.4-12.

The system design is based on the requirement to absorb a discharge of steam equivalent to 110% of the full power pressurizer steam volume. The steam volume requirement is approximately that which would be experienced if the plant were to suffer a complete loss of load accompanied by a turbine trip but without the resulting direct reactor trip. A delayed reactor trip is considered in the design of the system.

The minimum volume of water in the pressurizer relief tank is determined by the energy content of the steam to be condensed and cooled, by the assumed initial temperature of the water, and by the desired final temperature of the water volume. The initial water temperature is assumed to be 120°F, which corresponds to the design maximum expected containment temperature for normal conditions. Provision is made to permit cooling the tank should the water temperature rise above 120°F anytime during plant operation, including subsequent to a discharge to the tank (described in Subsection 5.4.11.2). The design final temperature is 200°F.

The vessel saddle supports and anchor bolt arrangement are designed to withstand the loadings resulting from a combination of nozzle loadings acting simultaneously with the vessel seismic and static loadings.

5.4.11.2 System Description

The piping and instrumentation diagram for the pressurizer relief discharge system is given in Drawings M-60 and M-135.

The steam and water discharge from the various safety and relief valves inside the containment is routed to the pressurizer relief tank if the discharged fluid is of reactor grade quality. Table 5.4-13 provides an itemized list of valves discharging to the tank.

The general configuration of the pressurizer relief tank is shown in Figure 5.4-8. The tank is a horizontal, cylindrical

vessel with elliptical dished heads. The vessel is constructed of austenitic stainless steel and is overpressure protected in accordance with ASME Code Section VIII, Division 1, by means of two safety heads with stainless steel rupture discs. Also shown in Figure 5.4-8 is the flanged nozzle for the pressurizer discharge line connection, the spray water inlet, the bottom drain connection, the gas vent connection, and the vessel supports.

The tank normally contains water and a hydrogen-nitrogen atmosphere. In order to obtain effective condensing and cooling of the discharge steam, the tank is installed horizontally so that the steam can be discharged through a sparger pipe located near the bottom, under the water level. The sparger holes are designed to ensure a resultant steam velocity close to sonic.

The nitrogen gas blanket is used to control the atmosphere in the tank and to allow room for the expansion of the original water plus the condensed steam discharge. The tank gas volume is calculated to limit tank pressure to 50 psig, based on the design conditions. The design discharge raises the worst case initial conditions to 50 psig, a pressure low enough to prevent fatigue of the rupture disks. Provision is made to permit the gas in the tank to be periodically analyzed to monitor the concentration of hydrogen and/or oxygen.

The internal spray and bottom drain on the pressurizer relief tank are used to cool the water when it is warmed above 120°F, as in the case following a discharge. Subsequent to a release to the tank, the contents are cooled by a feed-and-bleed process, using primary makeup water. The contents can be drained to the recycle holdup tank in the boron recycle system via the reactor coolant drain tank pumps in the waste processing system.

5.4.11.3 Safety Evaluation

The pressurizer relief discharge system does not constitute part of the reactor coolant pressure boundary per 10 CFR 50 Section 50.2, since all of its components are downstream of the reactor coolant system safety and relief valves. Thus, General Design Criteria 14 and 15 are not applicable. Furthermore, complete failure of the auxiliary system serving the pressurizer relief tank will not impair the capability for safe plant shutdown.

The design of the system piping layout and piping restraints is consistent with guidelines for protection against pipe whip inside containment. (See Subsection 5.2.2.5 for a discussion of restraining of safety and relief valve discharge piping). See Appendix A for a discussion of installation of overpressure protection devices. This system is not an open discharge system.

The pressurizer relief discharge system is capable of handling the design discharge of steam without exceeding the design pressure and temperature. The volume of nitrogen in the pressurizer relief tank is that required to limit the maximum pressure accompanying the design-basis discharge to 50 psig, half the design pressure of the tank. The volume of water in the tank is capable of absorbing the heat from the assumed discharge while maintaining the water temperature below 200°F. The internal spray rate is adequate to cool the water from 200° to 120°F in approximately 1 hour when reactor coolant makeup is supplied (described in Subsection 5.4.11.2).

If a discharge results in a pressure that exceeds the design, the rupture discs on the tank would pass the discharge through the tank to the containment. The rupture discs on the relief tank have a relief capacity equal to 1.6×10^6 lb/hr, which is greater than the combined capacity of the pressurizer safety valves. The tank and rupture discs holders are also designed for full vacuum to prevent tank collapse if, following a discharge, the contents of the tank cool without nitrogen being added.

The discharge piping from the safety and relief valves to the relief tank is sufficiently large to prevent backpressure at the safety valves from exceeding 500 psia, that is 20% of the setpoint pressure at full flow.

5.4.11.4 Instrumentation Requirements

The pressurizer relief tank pressure transmitter provides an indication of pressure relief tank pressure on the control board. An alarm is provided to indicate high tank pressure. The pressure transmitter also provides a signal to automatically close the flow control valve between the tank and vent header (if the valve is open when a high pressure occurs).

The pressurizer relief tank level transmitter supplies a signal for an indicator on the control board with high- and low-level alarms.

The temperature of the water in the pressurizer relief tank is indicated on the control board with a high temperature alarm.

5.4.11.5 Inspection and Testing Requirements

The system components are subject to nondestructive and hydrostatic testing during construction in accordance with Section VIII, Division 1 of the ASME Code.

During plant operation, periodic visual inspections and preventive maintenance are conducted on the system components according to normal industrial practice.

5.4.12 Valves

5.4.12.1 Design Bases

As noted in Section 5.2, all valves out to and including the second valve normally closed or capable of automatic or remote closure, larger than 3/4 inch, are ANS Safety Class 1, and ASME III, Code Class 1 valves. The 3/4 inch or smaller valves in lines connected to the reactor coolant system (RCS) are Class 2 where the interface with the Class 1 piping is provided with suitable orificing for such valves. Design data for the RCS valves are given in Table 5.4-14.

For a check valve to qualify as part of the RCS it must be located inside the containment system. When the second of two normally open check valves is considered part of the RCS (as defined in Section 5.1), means are provided to periodically assess back-flow leakage of the first valve when closed.

To ensure that the valves will meet the design objectives, the materials of construction minimize corrosion/erosion and ensure compatibility with the environment, leakage is minimized to the extent practicable by design, and Class 1 stresses are maintained within the limits of the ASME Section III Code.

5.4.12.2 Design Description

All valves in the RCS are constructed primarily of stainless steel.

All manual and motor-operated reactor coolant system valves that are larger than 2 inches and normally contain radioactive fluid are provided with double-packed stuffing boxes and stem intermediate lantern gland leakoff connections. All throttling control valves, regardless of size, are provided with double stuffing boxes and with stem leakoff connections. All leakoff connections are piped to a closed collection system. Leakage to the atmosphere is essentially zero for these valves.

Gate valves at the engineered safety features interface are wedge design and are essentially straight through. The wedges are flex-wedge or solid. All gate valves have backseats. Check valves are swing type for sizes 2-1/2 inches and larger. All check valves which contain radioactive fluid are stainless steel and do not have body penetrations other than the inlet, outlet and bonnet. The check hinge is serviced through the bonnet.

The accumulator check valve is designed such that at the required flow the resulting pressure drop is within the specified limits. All operating parts are contained within the body. The disc has limited rotation to provide a change of seating surface and alignment after each valve opening.

The reactor coolant loop stop valves are remotely controlled motor-operated gate valves which permit any loop to be isolated from the reactor vessel. One valve is installed on each hot leg and one on each cold leg. A reactor coolant loop stop valve is shown in Figure 5.4-9. The design of the valve is basically the same as noted above with the additional feature that each set of packing shall be capable of being tightened independently of the other sets of packing. Also, the valve is a parallel disc design. Loop stop valve parameters are given in Table 5.4-14.

An additional feature of the pressurizer power operated relief valve (PORV) block valves is the upgraded valve stem and the stem link with SA-479 type XM-19 cold drawn material. This upgrade was done to address industry concerns with brittle failures of block valve stems made from the original stem material, 17-4 PH precipitation hardened stainless steel subjected to temperatures at or above 600 degrees F. This enhancement has been implemented at both Byron and Braidwood.

5.4.12.3 Design Evaluations

The design/analysis requirements for Class 1 valves, as discussed in Section 5.2, limit stresses to levels which ensure the structural integrity of the valves. In addition, the testing programs described in Subsection 3.9.2 demonstrate the ability of the valves to operate as required during anticipated and postulated plant conditions.

Reactor coolant chemistry parameters are specified in the design specifications to assure the compatibility of valve construction materials with the reactor coolant. To ensure that the reactor coolant continues to meet these parameters, the chemical composition of the coolant will be analyzed periodically as discussed in TRM 3.4.6.

The above requirements and procedures, coupled with the previously described design features for minimizing leakage, ensure that the valves will perform their intended functions as required during plant operation.

5.4.12.4 Tests and Inspections

All RCS valves are tested in accordance with the requirements of the ASME Code, Section III. The tests and inspections discussed in Section 3.9 are performed to ensure the operability of active valves. In-place operational testing is performed on valves as required by the ASME Code, Section XI, as indicated in the Technical Specifications.

There are no full-penetration welds within valve body walls. Valves are accessible for disassembly and internal visual inspection to the extent practical. Valve nondestructive examinations are given in Table 5.4-15. Inservice inspection is discussed in Subsection 5.2.4.

5.4.13 Safety and Relief Valves

5.4.13.1 Design Bases

The combined capacity of the pressurizer safety valves is designed to accommodate the maximum surge resulting from complete loss of load. This objective is met without reactor

trip nor any operator action nor any credit for the opening of the steam safety valves when steam pressure reaches the steam-side safety setting.

The RCS utilizes various pressure control equipment in conjunction with the ASME code safety valves. Although this pressure control equipment is not required by the ASME Code, it is used to assist in maintaining the RCS within the normal operating pressure.

The pressurizer power-operated relief valves are designed to limit pressurizer pressure to a value below the fixed high pressure reactor trip setpoint. They are designed to fail to the closed position on loss of air supply to the valve operator. No provision is necessary to ensure activation of the valves should the air supply fail since the valves are classified as inactive.

The pressurizer power-operated relief valves are not required to open in order to prevent the overpressurization of the reactor coolant system. The pressurizer safety valves, by themselves, are sized to relieve enough steam to prevent an overpressurization of the primary system. Therefore, a loss of air supply to the valve operator, and the subsequent failure of the power-operated relief valves to open, will result in higher reactor coolant pressures, but will not cause any overpressurization problems. In fact, the opening of the power-operated relief valves, is a conservative assumption for the DNB-limited transients by tending to keep the primary system pressure down.

The pressurizer spray control valves are also utilized to control pressurizer pressure variations. During an insurge, the spray system, which is fed from the cold legs, condenses steam in the pressurizer to prevent the pressure from reaching the setpoint of the power-operated relief valves.

5.4.13.2 Design Description

The pressurizer safety valves are of the pop type. The valves are spring loaded, open by the direct fluid pressure action, and are designed with back pressure compensation features.

The 6-inch pipe connecting the pressurizer nozzles to their respective code safety valves, are shaped in the form of a loop seal. Condensate resulting from normal heat losses accumulates in the loop. The water prevents any leakage of hydrogen gas or steam through the safety valve seats. If the pressurizer pressure exceeds the set pressure of the safety valves, they start lifting, and the water from the seal discharges during the accumulation period.

The pressurizer power-operated relief valves are pneumatic actuated valves which respond to a signal from a pressure sensing system or to manual control. Remotely operated stop

valves are provided to isolate the power-operated relief valves if excessive leakage develops.

Temperatures in the pressurizer safety and relief valve discharge lines are measured and indicated. An increase in a discharge line temperature is an indication of leakage through the associated valve.

The spray valves on the pressurizer are modulating air-operated valves which also respond to a signal from pressure sensing instrumentation. These valves can also be controlled manually from the control room.

Design parameters from the pressurizer spray control, safety, and power relief valves are given in Table 5.4-16.

5.4.13.3 Design Evaluation

The pressurizer safety valves prevent reactor coolant system pressure from exceeding 110% of system design pressure, in compliance with the ASME B&PV Code, Section III.

The pressurizer power relief valves prevent actuation of the fixed reactor high-pressure trip for all design transients up to and including the design step load decreases with steam dump. The relief valves also limit undesirable opening of the spring-loaded safety valves. The pressure rise in a four-loop plant for the design step load decrease of 10% from full power is limited to 60 psi. The design step load decrease of 10% under N-1 loop operation is limited to approximately 50 psi. In both cases, the pressure rise is not sufficient to actuate the power-operated relief valves, and thus this design is conservative.

The magnitude and thrust direction of the safety valve discharges are considered in the design and stress analysis of the piping.

The pressurizer spray control valves help to prevent actuation of the power-operated relief valves. The spray rate is selected to prevent the pressurizer pressure from reaching the operating setpoint of the power-operated relief valves following a step load reduction in power of 10% of full load with reactor control.

5.4.13.4 Tests and Inspections

All safety and relief valves are subjected to hydrostatic tests, seat leakage tests, operational tests, and inspections. For safety and relief valves that are required to function during a faulted condition, additional tests are performed. These tests are described in Subsection 3.9.2.

5.4.14 Component Supports

5.4.14.1 Reactor Vessel Supports

For the discussion of the reactor vessel component supports refer to Subsection 3.9.3.4.

5.4.14.2 Pressurizer Support

For the discussion of the pressurizer supports refer to Subsection 3.9.3.4.

5.4.14.3 Steam Generator Support

For the discussion of the steam generator supports refer to Subsection 3.9.3.4.

5.4.14.4 Reactor Coolant Pump Support

For a discussion of the reactor coolant pump support refer to Subsection 3.9.3.4.

5.4.14.5 Design Criteria for Component Supports

For the discussion of design criteria for component supports, see Subsection 3.9.3.4.

5.4.15 References

1. Reactor Coolant Pump Integrity in LOCA, WCAP-8163, September 1973.

2. Report on Small Break Accidents for Westinghouse NSSS Systems, Volume 1, Nuclear Technology Division, Nuclear Safety Department, WCAP-9600, June 1979.

3. Dynamic Fracture Toughness Properties of Heavy Section A533 Grade B Class I Steel Plate, WCAP-7623, December 1970.

4. Evaluation of Steam Generator Tube, Tube Sheet and Divider Plate Under Combined LOCA Plus SSE Conditions, WCAP-7832, December 1972.

5. F. T. Eggelston, "Safety-Related Research and Development for Westinghouse Pressurized Water Reactors, Program Summaries," WCAP-8768, Rev. 1, Winter 1976.

6. Residual Decay Heat Standard for Westinghouse Nuclear Energy Systems, STD-DES-4L-RFS-4L20, March 1971.

7. ANS-N661, Standard for Evaluation of ATWT on PWR Plants, March 1975.

8. Babcock and Wilcox, "Replacement Steam Generator Design Report," B&W Document No. 222-7720-SR01, November 1996.

9. Babcock and Wilcox, "Stress Analysis Report," B&W Document No. 222-7720-SR07, November 1996.

10. Babcock and Wilcox, "Analysis of Tube Wall Thinning for Burst Pressure and Primary Stress Requirement of Regulatory Guide 1.121," B&W Calculation 222-7720-B136, Revision 0.

11. Babcock and Wilcox, "Replacement Steam Generators Secondary Side Corrosion Allowance Values for Design and Analysis," B&W Report 222-7720-PR05, Revision 3.

12. Babcock and Wilcox, "Byron/Braidwood RSG-Steam Outlet Nozzle Flow Restrictor Sizing and Pressure Loss," B&W Document 222-7720-A9, Revision 0, March 18, 1996.

13. NRC Letter, "Byron Station Units 1 and 2 and Braidwood Station Units 1 and 2, Natural Circulation Cooldown," dated November 4, 1988.

14. Calculation CN-RRA-00-47, "Byron/Braidwood Natural Circulation Cooldown TREAT Analysis for the RSG and Uprating Program," Revision 4.

TABLE 5.4-1

REACTOR COOLANT PUMP DESIGN PARAMETERS

Unit design pressure, psig	2485
Unit design temperature, °F	650*
Unit overall height, ft	26.93
Seal water injection, gpm	8
Seal water return, gpm	3
Cooling water flow, gpm	216**
Maximum continuous cooling water inlet temperature, °F	105
Pump	
Capacity, gpm (at pump discharge)	100,400
Developed head, ft	289
NPSH required, ft	Figure 5.4-2
Suction temperature, °F	556.3
Pump discharge nozzle, inside diameter, in.	27-1/2
Pump suction nozzle, inside diameter, in.	31
Speed, rpm	1185
Water volume, ft^3	80***
Weight (dry), lb	195,200
Motor	
Type	Drip proof, squirrel-cage induction, air cooled
Power, Hp	7000
Voltage, volts	6600

TABLE 5.4-1 (Cont'd)

Phase	3
Frequency, Hz	60
Insulation class	Class B, (or F at Byron only) Thermalastic Epoxy insulation
Current Amperes	
Starting	3000 amp at 6600 volts
Normal Input, hot reactor coolant	492
Normal Input, cold reactor coolant	654
Pump moment of inertia, lb-ft^2 maximum	
Flywheel	70,000
Motor	22,500
Shaft	520
Impeller	1,980

---

* Design Temperature of pressure retaining parts of the pump assembly exposed to the reactor coolant and injection water on the high pressure side of the controlled leakage seal shall be that temperature determined for the parts for a reactor coolant loop temperature of 650° F.

** Total flow to reactor coolant pump and motor.

*** Composed of reactor coolant and seal injection water in the casing and cooling water in the thermal barrier.

TABLE 5.4-2

REACTOR COOLANT PUMP NDE DURING FABRICATION

	RT*	UT*	PT*	MT*
Castings (pressure retaining)	yes		yes	
Forgings				
1. Main shaft		yes	yes	
2. Main Flange Bolting		yes	yes	yes***
3. Flywheel (rolled plate)		yes	yes	
Flywheel (finished)		yes	**	**
Weldments				
1. Instrument connections			yes	

* RT - Radiographic

UT - Ultrasonic

PT - Dye penetrant

MT - Magnetic particle

** Finished machined bores, keyways, and drilled holes are subjected to magnetic particle or dye penetrant examinations.

*** MT performed in lieu of PT on main flange bolting on pump(s) equipped with studs and hydraulic locking nuts.

TABLE 5.4-3

STEAM GENERATOR DESIGN DATA

Unit 1

Design pressure, reactor coolant side, psig	2485
Design pressure, steam side, psig	1185
Design temperature, reactor coolant side, °F	650
Design temperature, steam side, °F	600
Total heat transfer surface area, ft^2	79,800
Maximum moisture carryover, wt percent	0.10
Overall height, ft-in	67-8
Number of U-tubes	6633
U-tube nominal diameter, in.	0.6875
Tube wall nominal thickness, in.	0.040
Number of manways	3
Inside diameter of manways, in.	21
Number of inspection ports	16
Design fouling factor	0.00005

TABLE 5.4-3 (Con't)

Unit 2

Design pressure, reactor coolant side, psig	2485
Design pressure, steam side, psig	1185
Design temperature, reactor coolant side, °F	650
Design temperature, steam side, °F	600
Total heat transfer surface area, ft^2	48,300
Maximum moisture carryover, wt percent	0.25
Overall height, ft-in	67-8
Number of U-tubes	4570
U-tube nominal diameter, in.	0.750
Tube wall nominal thickness, in.	0.043
Number of manways	4
Inside diameter of manways, in.	16
Number of inspection ports	4*
Design fouling factor	0.00005
Preheat section	0.00010

* Byron Unit 2 steam generator C has 5 inspection ports.

TABLE 5.4-4

STEAM GENERATOR NDE DURING FABRICATION UNIT 1

	RT*	UT*	PT*	MT*	ET*
Tubesheet					
1. Forging		yes		yes	
2. Cladding		yes	yes		
Channel Head					
1. Forging		yes		yes	
2. Cladding			yes		
Secondary Shell and Head					
1. Plates		yes			
Tubes		yes			yes
Nozzles (Forgings)		yes		yes	
Weldments					
1. Shell, longitudinal	yes	yes		yes	
2. Shell, circumferential	yes	yes		yes	
3. Cladding (channel head-tubesheet joint cladding restoration)			yes		
4. Steam and feedwater nozzle to shell	yes	yes		yes	
5. Support brackets				yes	

* RT - Radiographic
UT - Ultrasonic
PT - Dye penetrant
MT - Magnetic particle
ET - Eddy current

TABLE 5.4-4 (Cont'd)

	RT*	UT*	PT*	MT*	ET*
6. Tube to tubesheet			yes		
7. Instrument connections (primary and secondary)				yes	
8. Temporary attachments after removal				yes	
9. After hydrostatic test (all welds - where accessible)			yes	yes	
10. Nozzle safe ends (if forgings)	yes		yes		
11. Nozzle safe ends (if weld deposit)	yes		yes		

* RT - Radiographic
UT - Ultrasonic
PT - Dye penetrant
MT - Magnetic particle
ET - Eddy current

TABLE 5.4-4a

STEAM GENERATOR NDE DURING FABRICATION UNIT 2

	RT*	UT*	PT*	MT*	ET*
Tubesheet					
1. Forging		yes		yes	
2. Cladding		yes**	yes		
Channel Head					
1. Casting	yes			yes	
2. Cladding			yes		
Secondary Shell and Head					
1. Plates		yes			
Tubes		yes			yes
Nozzles (Forgings)		yes		yes	
Weldments					
1. Shell, longitudinal	yes			yes	
2. Shell, circumferential	yes			yes	
3. Cladding (channel head-tubesheet joint cladding restoration)			yes		
4. Steam and feedwater nozzle to shell	yes			yes	
5. Support brackets				yes	

* RT - Radiographic
UT - Ultrasonic
PT - Dye penetrant
MT - Magnetic particle
ET - Eddy current

** Flat surfaces only

TABLE 5.4-4a (Cont'd)

	RT*	UT*	PT*	MT*	ET*
6. Tube to tubesheet			yes		
7. Instrument connections (primary and secondary)				yes	
8. Temporary attachments after removal				yes	
9. After hydrostatic test (all welds and complete cast channel head - where accessible)				yes	
10. Nozzle safe ends (if forgings)	yes		yes		
11. Nozzle safe ends (if weld deposit)			yes		

* RT - Radiographic
UT - Ultrasonic
PT - Dye penetrant
MT - Magnetic particle
ET - Eddy current

TABLE 5.4-5

REACTOR COOLANT PIPING DESIGN PARAMETERS

Reactor inlet piping, inside diameter, in.	27.5
Reactor inlet piping, nominal wall thickness, in.	2.32
Reactor outlet piping, inside diameter, in.	29
Reactor outlet piping, nominal wall thickness, in.	2.45
Coolant pump suction piping, inside diameter, in.	31
Coolant pump suction piping, nominal wall thickness, in.	2.60
Pressurizer surge line piping, nominal pipe size, in.	14
Pressurizer surge line piping, nominal wall thickness, in.	1.406
Reactor Coolant Loop Piping	
Design/operating pressure, psig	2485/2235
Design temperature, °F	650
Pressurizer Surge Line	
Design pressure, psig	2485
Design temperature, °F	680
Pressurizer Safety Valve Inlet Line	
Design pressure, psig	2485
Design temperature, °F	680
Pressurizer (Power-Operated) Relief Valve Inlet Line	
Design pressure, psig	2485
Design temperature, °F	680
Pressurizer Relief Tank Inlet Line	
Design pressure, psig	500
Design temperature, °F	470

TABLE 5.4-6

REACTOR COOLANT PIPING NDE DURING FABRICATION

	RT*	UT*	PT*
Fittings and Pipe (Castings)	yes		yes
Fittings and Pipe (Forgings)		yes	yes
Weldments			
1. Circumferential	yes		yes
2. Nozzle to runpipe (Except no RT for nozzles less than 6 inches)	yes		yes
3. Instrument connections			yes
Castings	yes		yes (after finishing)
Forgings		yes	yes (after finishing)

* RT - Radiographic

UT - Ultrasonic

PT - Dye penetrant

TABLE 5.4-7

DESIGN BASES FOR RESIDUAL HEAT REMOVAL SYSTEM OPERATION

Residual heat removal system startup	~4 hours after reactor shutdown
Reactor coolant system nominal pressure, psig	360
Reactor coolant system initial temperature, °F	~350
Maximum component cooling water temperature, °F	120 (max)
Maximum Service Water Temperature, °F	100
Reactor Coolant Pump stop temperature, °F	160
Reactor Coolant System heat capacity, MBTU/°F	2.233
Normal (2-Train) Cooldown	
Time after Shutdown, hrs. (Figure 5.4-6)	
- No SFP Heat Load	42.3
- Minimum SFP Heat Load (22 MBTU/hr)	46.7
Reactor Coolant System Temperature at end of cooldown, °F	140
Single Train Cooldown	
Time after Shutdown, hrs. (Figure 5.4-7)	
- No SFP Heat Load	50.3
Reactor Coolant System Temperature at end of cooldown, °F	200

TABLE 5.4-8

RESIDUAL HEAT REMOVAL SYSTEM COMPONENT DATA

Residual Heat Removal Pump	
Number	2
Design pressure, psig	600
Design temperature, °F	400
Design flow, gpm	3000
Design head, ft	375
NPSH required at 3000 gpm, ft	~12
Power, hp	400
Residual Heat Exchanger	
Number	2
Heat removal capacity for one heat exchanger, Btu/hr at the conditions below	28.79×10^6
Estimated UA for one unit, Btu/hr °F	2.16×10^6

	Tube side	Shell side
Design pressure, psig	600	150
Design temperature, °F	400	200
Design flow, lb/hr	$1.48 \times 10^{6*}$	2.475×10^6
Inlet temperature, °F	137	105
Outlet temperature, °F	117.5	116.7
Material	Austenitic stainless steel	Carbon steel
Fluid	Reactor coolant water	Component cooling

---

* Maximum allowable flow rate at RHR temperatures greater than or equal to 35 °F, but less than or equal to 75 °F, is 4,931 gpm. Maximum allowable flow rate at RHR temperatures greater than 75 °F is 5,000 gpm. (Reference Westinghouse calculations TE-EC-007 and V-EC-1678.)

TABLE 5.4-9

PRESSURIZER DESIGN DATA

Design pressure, psig	2485
Design temperature, °F	680
Surge line nozzle diameter, in.	14
Heatup rate of pressurizer using heaters only, °F/hr	
Startup, water solid	40
Hot standby condition	70
Internal volume ft^3	1800

TABLE 5.4-10

REACTOR COOLANT SYSTEM DESIGN PRESSURE SETTINGS
(See Technical Specifications for limiting values)

	PSIG
Hydrostatic test pressure	3106
Design pressure	2485
Safety valves (begin to open)	2460
High-pressure reactor trip	2385
High-pressure alarm	2310
Power relief valves (1/2RY455A)	2345*
Power relief valves (1/2RY456)	2335*
Pressurizer spray valves (full open)	2310
Pressurizer spray valves (begin to open)	2260
Proportional heaters (begin to operate)	2250
Operating pressure	2235
Proportional heater (full operation)	2220
Backup heaters on	2220
Low-pressure alarm	2220
Pressurizer relief valve interlock	2185
Low-pressure reactor trip (typical, but variable)	1885

* At indicated setpoint, a pressure signal initiates actuation (opening) of these valves. Remote manual control is also provided.

TABLE 5.4-11

PRESSURIZER QUALITY ASSURANCE PROGRAM

	RT*	UT*	PT*	MT*
Heads				
1. Plates		yes		
2. Cladding			yes	
Shell				
1. Plates		yes		
2. Cladding			yes	
Heaters				
1. Tubing(+)		yes	yes	
2. Centering of element	yes			
Nozzle (Forgings)		yes	Yes**	Yes**
Weldments				
1. Shell, longitudinal	yes			yes
2. Shell, circumferential	yes			yes
3. Cladding			yes	
4. Nozzle safe end (if forging)	yes		yes	
5. Instrument connection			yes	
6. Support skirt, long seam	yes			yes
7. Support skirt to lower head		yes		yes
8. Temporary attachments (after removal)				yes
9. All external pressure boundary welds after shop hydrostatic test				yes

* RT - Radiographic
UT - Ultrasonic
PT - Dye Penetrant
MT - Magnetic Particle

** MT or PT

(+) Or a UT and ET* RT - Radiographic

TABLE 5.4-12

PRESSURIZER RELIEF TANK DESIGN DATA

Design pressure, psig	100
Initial operating pressure, psig	3
Final operating pressure, psig	50
Design temperature, °F	340
Initial operating water temperature, °F	120
Final operating water temperature, °F	200
Cooling time required, approximate hr. following maximum discharge	1
Initial operating water volume, ft^3	1350
Initial operating gas volume, ft^3	450
Rupture disc release pressure, nominal, psig	91
range, psig	86 - 100
Total rupture disc relief capacity, lb/hr at 100 psig	1.6×10^6

TABLE 5.4-13

RELIEF VALVE DISCHARGE TO THE PRESSURIZER RELIEF TANK

Reactor Coolant System

3 Pressurizer safety valves

2 Pressurizer power-operated relief valves

Chemical and Volume Control System

1 Seal water return line

1 Letdown line

TABLE 5.4-14

REACTOR COOLANT SYSTEM VALVE DESIGN PARAMETERS

Reactor Coolant Loop Stop Valves	
Design/Normal Operating Pressure, psig	2485/2235
Pre-Operational Plant Hydro Test, psig	3107
Design Temperature, °F	650
Hot Leg Valve Size, Nominal, in.	29
Cold Leg Valve Size, Nominal, in.	27-1/2
Open/Close Travel Time, sec.	210
Other Reactor Coolant Boundary Valves	
Design/Normal Operating Pressure, psig	2485/2235
Pre-Operational Plant Hydrotest, psig	3107
Design Temperature, °F	650

TABLE 5.4-15

REACTOR COOLANT SYSTEM VALVES NDE DURING FABRICATION

VALVE BODY TYPE		RT*	UT*	PT*
Castings	(larger than 4 inches)	yes		yes
	(2 inches to 4 inches)	yes(1)		yes
Forgings	(larger than 4 inches)	(2)	(2)	yes
	(2 inches to 4 inches)			yes

* RT - Radiographic
UT - Ultrasonic
PT - Dye penetrant
(1) - Weld ends only
(2) - Either RT or UT

TABLE 5.4-16

PRESSURIZER VALVES DESIGN PARAMETERS

Pressurizer Spray Control Valves		
Number		2
Design pressure, psig		2485
Design temperature, °F		650
Design flow for valves full open, each, gpm		450
Pressurizer Safety Valves		
Number		3
Maximum relieving capacity, ASME rated flow, lb/hr (Saturated steam)		420,000
Set pressure, psig		2460
Design temperature, °F		650
Transient condition, °F	(Superheated steam)	680
Backpressure:		
Normal, psig		3 to 5
Expected during discharge, psig		350
Relieving capacity, per valve lb/hr	(Saturated steam)	420,000
Pressurizer Power Relief Valves		
Number		2
Design pressure, psig		2485
Design temperature, °F		680
Relieving capacity at 2350 psig, lb/hr (per valve) (Saturated steam)		210,000
Transient condition, °F	(Superheated steam)	680
Relieving capacity, lb/hr (per valve) (Saturated steam)		179,000

TABLE 5.4-17

FAILURE MODE AND EFFECTS ANALYSIS - RESIDUAL HEAT REMOVAL SYSTEM
ACTIVE COMPONENTS - PLANT COOLDOWN OPERATION

COMPONENT	FAILURE MODE	EFFECT ON SYSTEM OPERATION	**FAILURE DETECTION METHOD	REMARKS
1. Motor operated gate valve 1RH8701A-1 (1RH8702A-1 analogous)	a. Fails to open on demand (open manual mode CB switch selection)	a. Failure blocks reactor coolant flow from hot leg of RC loop #1 through train "A" of RHRS. Fault reduces redundancy of RHR coolant trains provided. No effect on safety for system operation. Plant cooldown requirements will be met by reactor coolant flow from hot leg of RC loop #3 flowing through train "B" of RHRS, however, time required to reduce RCS temperature will be extended.	a. Valve position indication (closed to open position change) at CB; RC loop #1 hot leg pressure indication (PI-403) at CB; RHR train "A" discharge flow indication (FI-618) and low flow alarm at CB; and RHR pump discharge pressure indication (PI-614) at CB.	1. Valve is electrically interlocked with the containment sump isolation valves (1SI8811A-1 and 1SI8812A-1), with a "prevent-open" pressure interlock (PB-405A) of RC loop #1 hot leg. The valve cannot be opened remotely from the CB if one of the indicated isolation valves is open or if RC loop pressure exceeds 360 psig.

* See list at end of table for definition of acronyms and abbreviations used.

** As part of plant operation, periodic tests, surveillance inspections, and instrument calibrations are made to monitor equipment and performance. Failures may be detected during such monitoring of equipment in addition to detection methods noted.

TABLE 5.4-17 (Cont'd)

COMPONENT	FAILURE MODE	EFFECT ON SYSTEM OPERATION	FAILURE DETECTION METHOD	REMARKS
				2. If both trains of RHRS system are unavailable for plant cooldown due to multiple component failures, the auxiliary feedwater system and SG power operated relief valves can be used to perform the safety function of removing residual heat.
2. Motor operated gate valve 1RH8701B-2 (1RH8702B-2 analogous)	a. Same failure modes as those stated for item #1	a. Same effect on system operation as that stated for item #1	a. Same methods of detection as those stated for item #1.	1. Same remarks as those stated for item #1, except for pressure interlock (PB-403A) control.
3. Residual heat removal pump #1, RHR (pump #2 analogous)	a. Fails to deliver working fluid	a. Failure results in loss of reactor coolant flow from hot leg of RC loop #1 through train "A" of RHRS. Fault reduces redundancy of RHR coolant trains provided. No effect on safety for system operation. Plant cooldown	a. Open pump switchgear circuit breaker indication at CB; circuit breaker close position monitor light for group monitoring of components at CB; common breaker trip alarm at CB; RC loop #1 hot leg pressure indication (PI-403) at CB; RHR	1. The RHRS shares components with the ECCS. Pumps are tested as part of the ECCS testing program (see Sub-section 6.3.4). Pump failure may also be detected during ECCS testing.

TABLE 5.4-17 (Cont'd)

COMPONENT	FAILURE MODE	EFFECT ON SYSTEM OPERATION	FAILURE DETECTION METHOD	REMARKS
		requirements will be met by reactor coolant flow from hot leg of RC loop #3 flowing through train "B" of RHRS; however, time required to reduce RCS temperature will be extended.	train "A" discharge flow indication (FI-618) and low flow alarm at CB; and pump discharge pressure indication (PI-614) at CB.	
4. Motor operated gate valve 1RH610-1 (1RH611-2 analogous)	a. Fails to open on demand open manual mode CB switch selection)	a. Failure blocks miniflow line to suction of RHR pump "A" during cooldown operation of checking boron concentration level of coolant in train "A" of RHRS. No effect on safety for system operation. Operator may establish miniflow for RHR pump "A" operation by opening of CVCS letdown control valve 1CVHCV128 and manual valve 1RH8734A to allow flow to CVCS.	a. Valve position indication (closed to open position change) at CB.	1. Valve is automatically controlled to open when pump discharge is less than 750 gpm (at 350°F) and close when the discharge exceeds 1400 gpm (at 350°F). The valve protects the pump from dead-heading during ECCS operation. CB switch set to "Auto" position for automatic control of valve positioning.
	b. Fails to close on demand ("Auto" mode CB switch selection)	b. Failure allows for a portion of RHR heat exchanger "A" discharge flow to be	b. Valve position indication (open to closed position change) and RHRS Train "A" discharge	

TABLE 5.4-17 (Cont'd)

COMPONENT	FAILURE MODE	EFFECT ON SYSTEM OPERATION	FAILURE DETECTION METHOD	REMARKS
		bypassed to suction of RHR pump "A." RHRS train "A" is degraded for the regulation of coolant temperature by RHR heat exchanger "A." No effect on safety for system operation. Cooldown of RCS within established speci-fication cooldown rate may be accomplished through operator action of throttling flow control valve 1RHHCV606 and controlling cooldown with redundant RHRS Train "B."	charge flow indication (FI-618) at CB.	
5. Air diaphragm operated butter-fly valve 1RHFCV618 (1RHFCV619 analogous)	a. Fails to open on demand ("Auto" mode CB switch selection)	a. Failure prevents coolant discharged from RHR pump "A" from by-passing RHR heat exchanger "A" resulting in mixed mean temperature of coolant flow to RCS being low. RHRS train "A" is degraded for the regulation of controlling	a. RHR pump "A" discharge flow temperature and RHRS train "A" discharge to RCS cold leg flow temperature recording (TR-612) at CB; and RHRS train "A" discharge to RCS cold leg flow indication (FI-618) at CB.	1. Valve is designed to fail "closed" and is electrically wired so that electrical solenoid of the air diaphragm operator is energized to open the valve. Valve is normally "closed"

TABLE 5.4-17 (Cont'd)

COMPONENT	FAILURE MODE	EFFECT ON SYSTEM OPERATION	FAILURE DETECTION METHOD	REMARKS
		temperature of coolant. No effect on safety for system operation. Cooldown of RCS within established speci-fication rate may be accomplished through operator action of throttling flow control valve 1RHHCV606 and controlling cooldown with redundant RHRS train "B."		to align RHRS for ECCS operation during plant power operation and load follow.
	b. Fails to close on demand ("Auto" mode CB switch selection)	b. Failure allows coolant discharged from RHR pump "A" to bypass RHR heat exchanger "A" resulting in mixed mean temperature of coolant flow to RCS being high. RHRS train "A" is degraded for the regulation of controling temperature of coolant. No effect on safety for system operation. Cooldown of RCS within established specification rate may be accomplished through	b. Same method of detection as those stated above.	

TABLE 5.4-17 (Cont'd)

COMPONENT	FAILURE MODE	EFFECT ON SYSTEM OPERATION	FAILURE DETECTION METHOD	REMARKS
		operator action of throttling flow control valve 1RHHCV606 and controlling cooldown with redundant RHRS train "B;" however, cooldown time will be extended.		
6. Air diaphragm operated butterfly valve 1RHHCV606 (1RHHCV607) analogous)	a. Fails to close on demand for flow reduction	a. Failure prevents control discharge flow from RHR heat exchanger "A" resulting in loss of mixed mean temperature coolant flow adjustment to RCS. No effect on safety for system operation. Cooldown of RCS within established specification rate may be accomplished by operator action of controlling cooldown with redundant RHRS train "B."	a. Same methods of detection as those stated for Item #5. In addition, monitor light and alarm (valve closed) for group monitoring of components at CB.	1. Valve is designed to fail "open." The valve is normally "open" to align RHRS for ECCS operation during plant power operation and load follow.
	b. Fails to open on demand for increased flow	b. Same effect on system operation as that above for failure mode	b. Same methods as those stated above for failure mode "Fails to	

TABLE 5.4-17 (Cont'd)

COMPONENT	FAILURE MODE	EFFECT ON SYSTEM OPERATION	FAILURE DETECTION METHOD	REMARKS
		"Fails to close on demand for flow reduc-tion."	close on demand for flow reduction."	
7. Manual globe valve 1RH8734A (1RH8734B analogous)	a. Fails closed	a. Failure blocks from train "A" of RHRS to CVCS letdown heat exchanger. Fault prevents (during the initial phase of plant cooldown) the adjustment of boron concentration level of coolant in lines of RHRS train "A" so that it equals the concentration level in the RCS using the RHR cleanup line to CVCS. No effect on safety for system operation. Operator can balance boron concentration levels by cracking open flow control valve 1RHHCV606 to permit flow to cold leg of loop #1 of RCS in order to balance levels using normal CVCS letdown flow.	a. CVCS letdown flow indication (FI-132) at CB.	1. Valve is normally "closed" to align the RHRS for ECCS operation during plant power operation and load follow.

TABLE 5.4-17 (Cont'd)

COMPONENT	FAILURE MODE	EFFECT ON SYSTEM OPERATION	FAILURE DETECTION METHOD	REMARKS
8. Air diaphragm operated globe valve 1CVHCV128	a. Fails to open on demand	a. Failure blocks flow from train "A" and "B" of RHRS to CVCS letdown heat exchanger. Fault presents use of RHR cleanup line to CVCS for balancing boron concentration levels of RHR trains "A" and "B" with RCS during initial cooldown operation and later in plant cooldown for letdown flow. No effect on safety for system operation. Operator can balance boron concentration levels with similar actions, using pertinent flow control valve 1RHHCV606 and 1RHHCV607, as stated above for item #8. Normal CVCS letdown flow can be used for purification if RHRS cleanup line is not available.	a. Valve position indication (degree of opening) at CB and CVCS letdown flow indication (FI-132) at CB.	1. Same remark as that stated above for item #7. 2. Valve is a component of the CVCS that performs an RHR function during plant cooldown operation.

TABLE 5.4-17 (Cont'd)

COMPONENT	FAILURE MODE	EFFECT ON SYSTEM OPERATION	FAILURE DETECTION METHOD	REMARKS
9. Motor operated gate valve 1SI8812A-1 (1SH8812B-2 analogous)	a. Fails to close on demand	a. Failure reduces the redundancy of isolation valves provided to flow isolate RHRS train "A" from RWST. No effect on safety for system operation. Check valve 1SI8958A in series with MO-valve provides the primary isolation against the bypass of RCS coolant flow from the suction of RHR pump "A" to RWST.	a. Valve position indication (open to closed position change) at CB and valve (closed) monitor light and alarm at CB.	1. Valve is a component of the ECCS that performs an RHR function during plant cooldown. Valve is normally "open" to align the RHRS for ECCS operation during plant power operation and load follow.

List of acronyms and abbreviations

Auto - Automatic
CB - Control Board
CVCS - Chemical and Volume Control System
ECCS - Emergency Core Cooling System
MO - Motor Operated
RC - Reactor Coolant
RCS - Reactor Coolant System
RHR - Residual Heat Removal
RHRS - Residual Heat Removal System
RWST - Refueling Water Storage Tank
SG - Steam Generator

Table 5.4-18

SINGLE FAILURE EVALUATION OF SYSTEMS REQUIRED TO REACH COLD SHUTDOWN PER BTP RSB 5-1

I. Residual Heat Removal

A. From Hot Standby to 350°F

1. Reactor coolant loops and steam generator - Four reactor coolant loops and steam generators are provided, any one of which can provide natural circulation flow for adequate core cooling. Even with the most limiting single failure (a steam generator power-operated relief valve), three of the reactor coolant loops and steam generators remain available.

2. Steam generator atmospheric relief valves - Four valves are provided (one per generator), any two of which is sufficient for residual heat removal at hot standby conditions. In the event of a single failure, three power-operated relief valves remain available.(NOTE 1)

3. Condensate storage tank (non-Category I) - Upon depletion of the primary source of auxiliary feedwater in the condensate storage tank, a backup source of auxiliary feedwater can be provided to the suction of the auxiliary feedwater pumps from either train of the Seismic Category I essential service water system.

B. From 350°F to Cold Shutdown

1. RHR pumps A and B - Two RHR pumps are provided, either one of which can provide adequate circulation of the reactor coolant. Each pump is powered from a different emergency power train. In the event of a single failure, either pump can provide sufficient RHR flow.

2. RHR suction isolation valve RH8701A and RH8701B (to RHR pump A) and RH8702A and RH8702B (to RHR pump B) - The two valves in each RHR subsystem are each powered from different emergency power trains. Failure of either power train can prevent initiation of RHR cooling in the normal manner from the control room. In the event of such a failure, the

TABLE 5.4-18 (Cont'd)

affected valve(s) can be deenergized and opened with its handwheel by operator action outside of the control room. Other single failures that would only affect one of the RHR subsystems can be tolerated and adequate cooling can be provided by the redundant subsystem.

3. RHR heat exchangers A and B - If either heat exchanger is unavailable for any reason, the remaining heat exchanger can provide sufficient heat removal capability.

4. RHR flow control valves RH606 and RH607 - If either of these normally open, fail open valves closes spuriously, sufficient RHR cooling can be provided by the unaffected RHR subsystem.

5. RHR/Safety Injection System cold leg isolation valves SI8809 A and SI8809 B - If either of these normally open, motor-operated valves, which are powered from different emergency power trains, closes spuriously, sufficient RHR cooling can be provided by the unaffected RHR subsystem. The affected valve can be deenergized and opened with its handwheel.

6. Component cooling water system - Two redundant subsystems are provided for safety-related loads. Either subsystem can provide sufficient heat removal via one of the RHR heat exchangers.

7. Essential service water system - Two redundant subsystems are provided for safety-related loads. Either subsystem can provide sufficient heat removal via one of the component cooling water system heat exchangers.

8. RHR Suction or Discharge Relief Valves RH8708A, RH8708B, SI8842, SI8856A, and SI8856B – If any one of the normally closed relief valves fails open water will be discharged to the Recycle Holdup Tank. The inventory loss would be diagnosed by either the decreasing level in the pressurizer and/or the increasing level in the Recycle Holdup Tank. Failed relief valves RH8708A, RH8708B, SI8856A, and SI8856B can be isolated by closing the isolation valves for one train of RH cooling. Sufficient RHR cooling can be provided by the unaffected RHR train. A failed SI8842 relief valve can be isolated by closing valves RH8716A/B. Isolation of valves RH8716A/B would not adversely impact the system function to cool down from 350°F to cold shutdown.

II. Boration and Inventory Control

A. Boric acid tanks 1 and 2 - Two boric acid tanks are provided. Each tank contains sufficient 4 wt% percent boric acid to borate the RCS for cold shutdown.

B. Boric acid transfer pumps 0, 1 and 2 - Normally one pump is aligned with each unit (1 and 2 respectively). Pump 0 is installed as a spare and can serve either unit. Each pump is normally powered from non-ESF buses (133 and 233 respectively) but can be powered from ESF buses (141 and 241 respectively by closing a cross tie breaker. In the event

TABLE 5.4-18 (Cont'd)

of a single failure, either pump can provide sufficient boric acid flow.

C. Isolation valve CV8104 - If valve CV8104, which is supplied from emergency power and is normally closed, cannot be opened due to power train or operator failure, it can be opened locally with its handwheel. If valve CV8104 cannot be opened with its handwheel, an alternate flow path is available via air-operated, fail-open valve CV110 and normally closed manual valve CV8439.

D. Refueling water storage tank isolation valves CV112D and CV112E - Each valve is powered from a different emergency power train; only one of these normally closed motor-operated valves needs to be opened to provide a makeup flow path from the RWST to the centrifugal charging pumps.

E. Centrifugal charging pumps 1 and 2 - Pumps 1 and 2 are powered from a different emergency power train. In the event of a single failure, any one pump can provide sufficient boration or makeup flow.

F. Flow control valve (CV121 - This valve fails open on loss of air to the valve operator.) If CV121 closes spuriously, the centrifugal charging pumps can safely operate on their miniflow circuits. Efforts would be made to open it. Boration can be accomplished by starting the positive displacement pump or by using the cold leg injection flow path. (The positive displacement charging pump can be expected to be isolated administratively for extended periods of time.)

G. Normal charging flow control valve CV182 - This normally open valve fails open on loss of air to the valve operator or power. If CV182 closes spuriously, the charging pumps can operate on their miniflow circuits until operator action can open bypass valve CV8403.

H. Normal charging isolation valves CV8105 and CV8106 - If either of these normally open, motor-operated valves, each of which is powered from a different emergency power train closes spuriously, operator action can be used to deenergize the valve operator and reopen the valve with its handwheel.

I. Normal charging isolation valve CV8146 - If this normally open valve closes spuriously, alternate charging valve CV8147, which fails open, can be used.

J. Reactor coolant pump seal injection valves CV8355A, CV8355B, CV8355C, and CV8355D - If any of these

TABLE 5.4-18 (Cont'd)

normally open, motor-operated valves closes spuriously, operator action can be used to deenergize the valve operator and reopen the valve with its handwheel.

III. Depressurization

A. Auxiliary spray valve CV8145 - This normally closed valve fails closed on loss of air to the valve operator. In this case, valve CV8145 can be opened by using a portable nitrogen bottle. If valve CV8145 is stuck closed as a result of a single failure, the redundant pressurizer power-operated relief valves can be used to depressurize the RCS by discharging the pressurizer inventory to the pressurizer relief tank.

B. Charging valves CV8146 and CV8147 - These valves fail open on loss of air to the valve operator. In this case, valves CV8146 and CV8147 can be closed by using portable nitrogen bottles. If either is stuck open, the redundant pressurizer power-operated relief valves can be used to depressurize the RCS by discharging the pressurizer inventory to the pressurizer relief tank.

C. RHR suction isolation valve RH8701A and RH8701B and RH8702A and RH8702B - The RHR suction isolation valves are qualified for the steamline break environment. Therefore, they are qualified for the less severe environment that would result if, as described in the above A and B, the RCS is depressurized by discharging the pressurizer inventory to the pressurizer relief tank.

IV. Instrumentation

Sufficient instrumentation is provided to monitor from the control room the key functions associated with cold shutdown. All necessary indications are redundant. Thus, in the event of a single failure, the operator can make comparisons between duplicate information channels or between functionally related channels in order to identify the particular malfunction. Refer to Section 7.5 for applicable details.

NOTE 1
A passive single failure is the limiting single failure because power is lost to two of four SG PORVs. In accordance with the Reference 14 analysis, only two SG PORVs are needed during hot standby. A third SG PORV is needed to maintain the desired cooldown rate later in the cooldown. Crediting operation of a third SG PORV is acceptable since sufficient time is available for local operator action and direction is provided under plant operating procedures.

TABLE 5.4-19

SUMMARY OF SYSTEMS AND EQUIPMENT REQUIRED FOR COLD SHUTDOWN BORATION WITHOUT LETDOWN

Boric Acid Tank

Boric Acid Transfer Pump

Centrifugal charging Pump

Charging Line

Pressurizer Level Indication

CVCS Auxiliary Spray* - OR - Pressurizer Relief Valve

Residual Heat Removal Loop

Refueling Water Storage Tank

* CVCS auxiliary spray is non-safety grade but could be used if an air supply is available

TABLE 5.4-20

TABLE 5.4-21

TABLE 5.4-22

COMPARISON OF HYDRAULIC RESISTANCE COEFFICIENTS

UNITS: $Ft/(Loop\ gpm)^2 \times 10^{-10}$

	DIABLO CANYON UNIT 1	BYRON/BRAIDWOOD*
Reactor Core and Internals	7.6	7.14
Reactor Nozzles	36.8	27.55
RCS Piping	24.0	30.0
Steam Generator	114.4	116.9
Total	182.8	181.6

Flow Ratio : $\frac{\text{DIABLO CANYON}}{\text{BYRON/BRAIDWOOD}} = \left[\frac{182.8}{181.6}\right]^{1/2} \simeq 1.0033$

* The Unit 1 steam generators have lower flow resistance than the originally installed steam generators, which is addressed in this table. Since this difference favors natural circulation, the values in this column apply to Byron and Braidwood Unit 2, but are bounding for Byron and Braidwood Unit 1.

TABLE 5.4-23

COMPARISON OF UPPER HEAD REGION HYDRAULIC RESISTANCE

	DIABLO CANYON UNIT 1	BYRON/BRAIDWOOD
Flow area (ft^2)	0.77	0.844
Loss coefficient	1.51	1.45
Overall hydraulic resistance (ft^{-4})	2.57	2.038
Relative head region flowrate (Based on hydraulic resistance)	1.00	1.12

Figure 5.1-1 has been deleted intentionally.

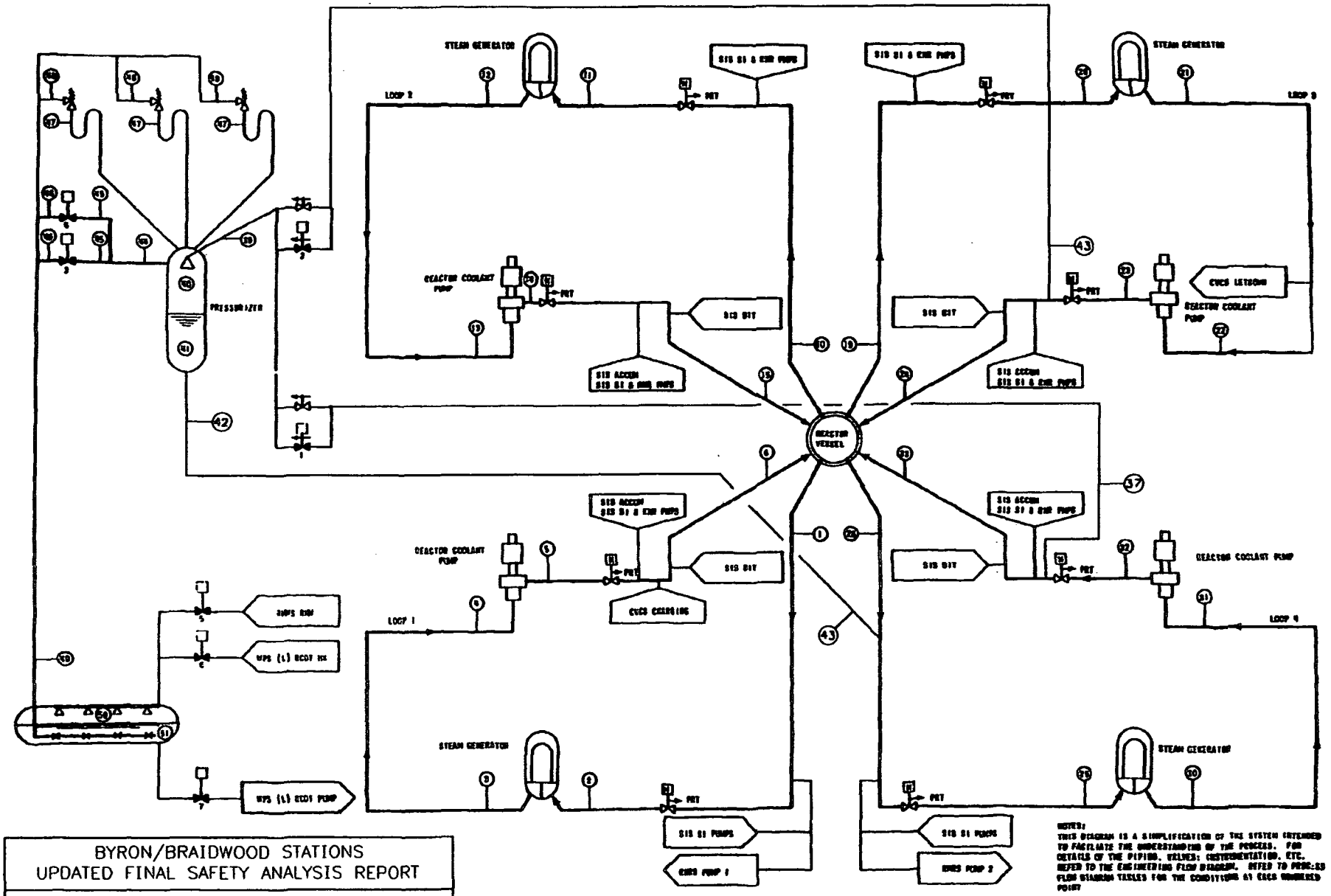

BYRON/BRAIDWOOD STATIONS
UPDATED FINAL SAFETY ANALYSIS REPORT

FIGURE 5.1-2

REACTOR COOLANT SYSTEM
PROCESS FLOW DIAGRAM
(SHEET 1 OF 2)

REVISION 7
DECEMBER 1998

NOTES TO FIGURE 5.1-2

STEADY-STATE FULL POWER OPERATION

LOCATION	FLUID	APPROX. PRESSURE PSIG	TEMPERATURE °F	FLOW GPM(1)	FLOW LB/HR(2)	VOLUME
1	R.C.	2246	608-620.3		34.3-34.95	-
2	"	2244	608-620.3		34.3-34.95	-
3	"	2207	541.7-555.4		34.3-34.95	-
4	"	2203	541.7-555.4		34.3-34.95	-
5	"	2296	541.7-555.4		34.3-34.95	-
6	"	2294	541.7-555.4		34.3-34.95	-
10-15	"	SEE LOOP #1 SPECIFICATIONS				-
19-24	"	SEE LOOP #1 SPECIFICATIONS				-
28-33	"	SEE LOOP #1 SPECIFICATIONS				-
37	"	2294	541.7-555.4	1.0	0.0004	
38	"	2294	541.7-555.4	1.0	0.0004	
39	"	2235	541.7-555.4	2.0	0.0008	
40	STEAM	2235	652.7	-	-	720
41	R.C.	2235	652.7	-	-	1080
42	"	2235	652.7	2.5	0.0008	-
43	"	2235	652.7	2.5	0.0008	-
44	STEAM	2235	652.7	0	0	-
45	R.C.	2235	<652.7	0	0	-
46	N_2	3.0	120	0	0	-
47	R.C.	2235	<652.7	0	0	-
48	N_2	3.0	120	0	0	-
49	"	3.0	120	0	0	-
50	"	3.0	120	-	-	450
51	PRT WATER	3.0	120	-	-	1350

(1) BEST ESTIMATE FLOWS AT 0% SGTP:

BYRON 1	103,000 (GPM)
BYRON 2	101,700 (GPM)
BRAIDWOOD 1	102,900 (GPM)
BRAIDWOOD 2	100,900 (GPM)

(2) X 10^6

BYRON/BRAIDWOOD STATIONS
UPDATED FINAL SAFETY ANALYSIS REPORT

FIGURE 5.1-2
REACTOR COOLANT SYSTEM
PROCESS FLOW DIAGRAM
(SHEET 2 OF 2)

Figures 5.1-3 through 5.1-4 have been deleted intentionally.

Figures 5.2-1 through 5.2-5 have been deleted intentionally.

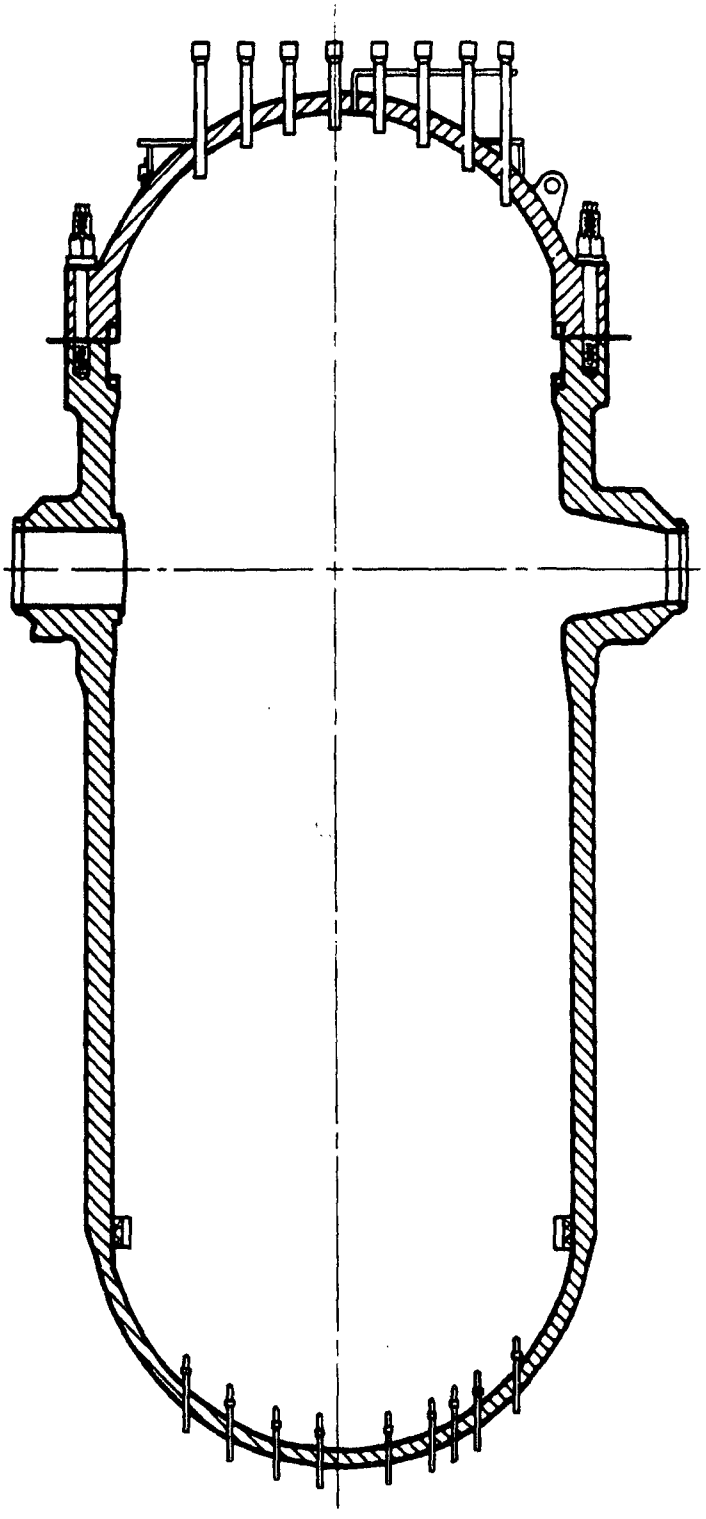

BYRON/BRAIDWOOD STATIONS
UPDATED FINAL SAFETY ANALYSIS REPORT

FIGURE 5.3-1

REACTOR VESSEL

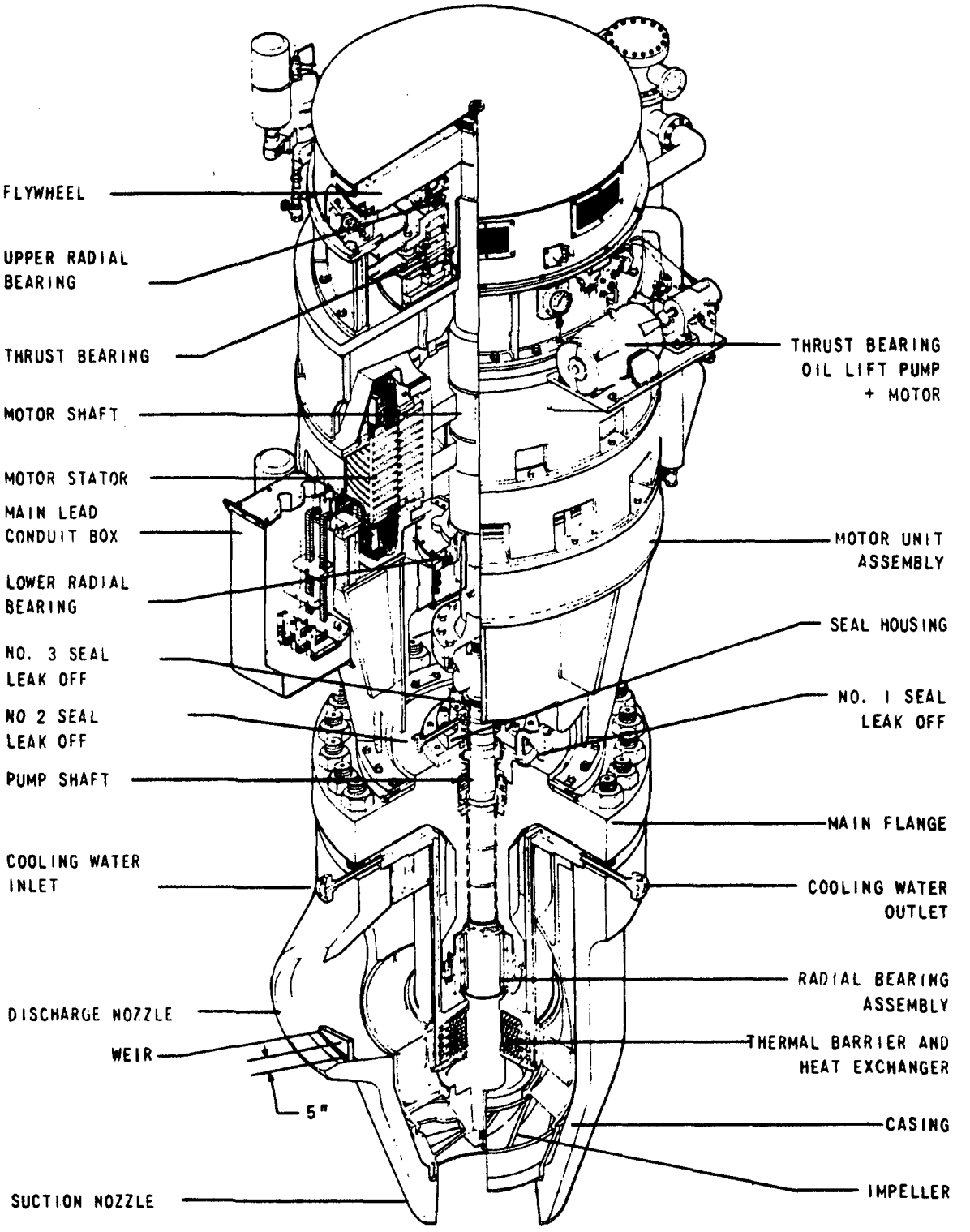

BYRON/BRAIDWOOD STATIONS
UPDATED FINAL SAFETY ANALYSIS REPORT

FIGURE 5.4-1

REACTOR COOLANT CONTROLLED LEAKAGE PUMP

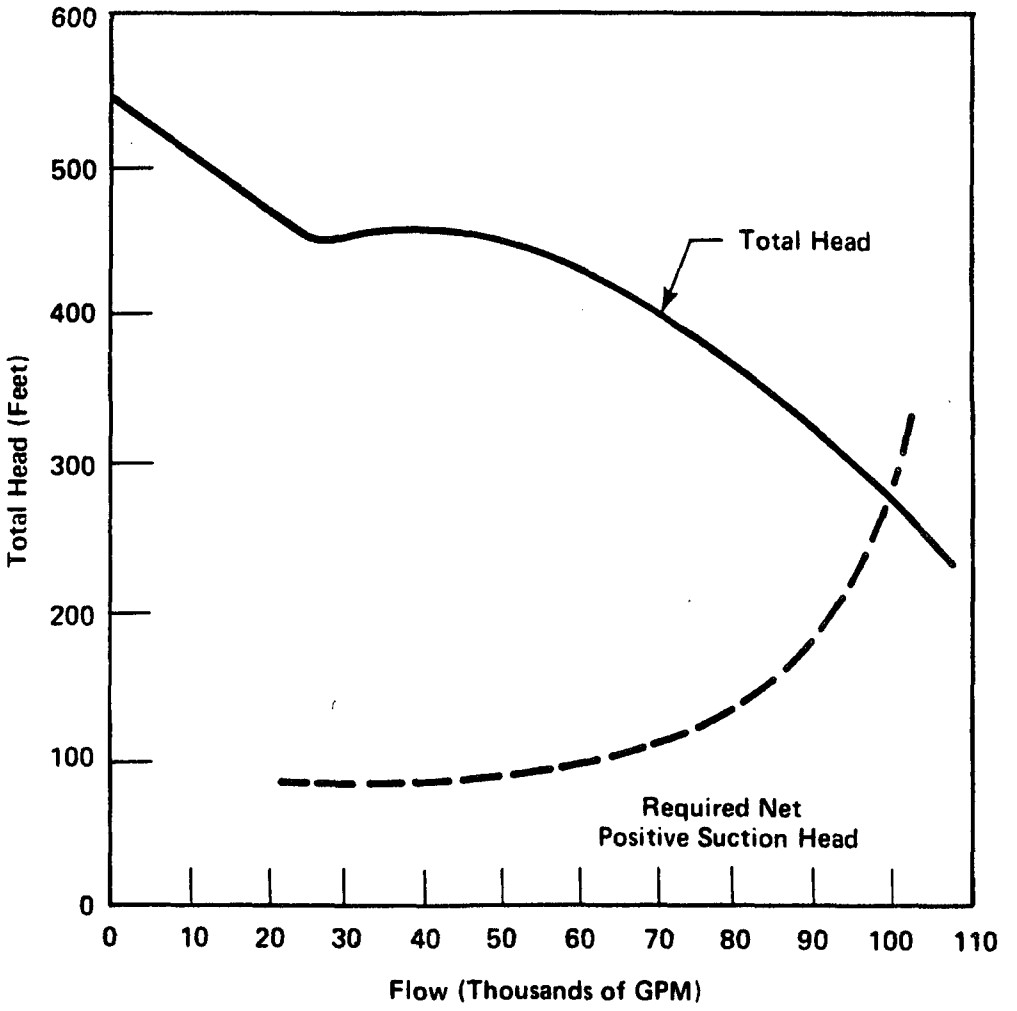

BYRON/BRAIDWOOD STATIONS
UPDATED FINAL SAFETY ANALYSIS REPORT

FIGURE 5.4-2

REACTOR COOLANT PUMP ESTIMATED PERFORMANCE CHARACTERISTIC

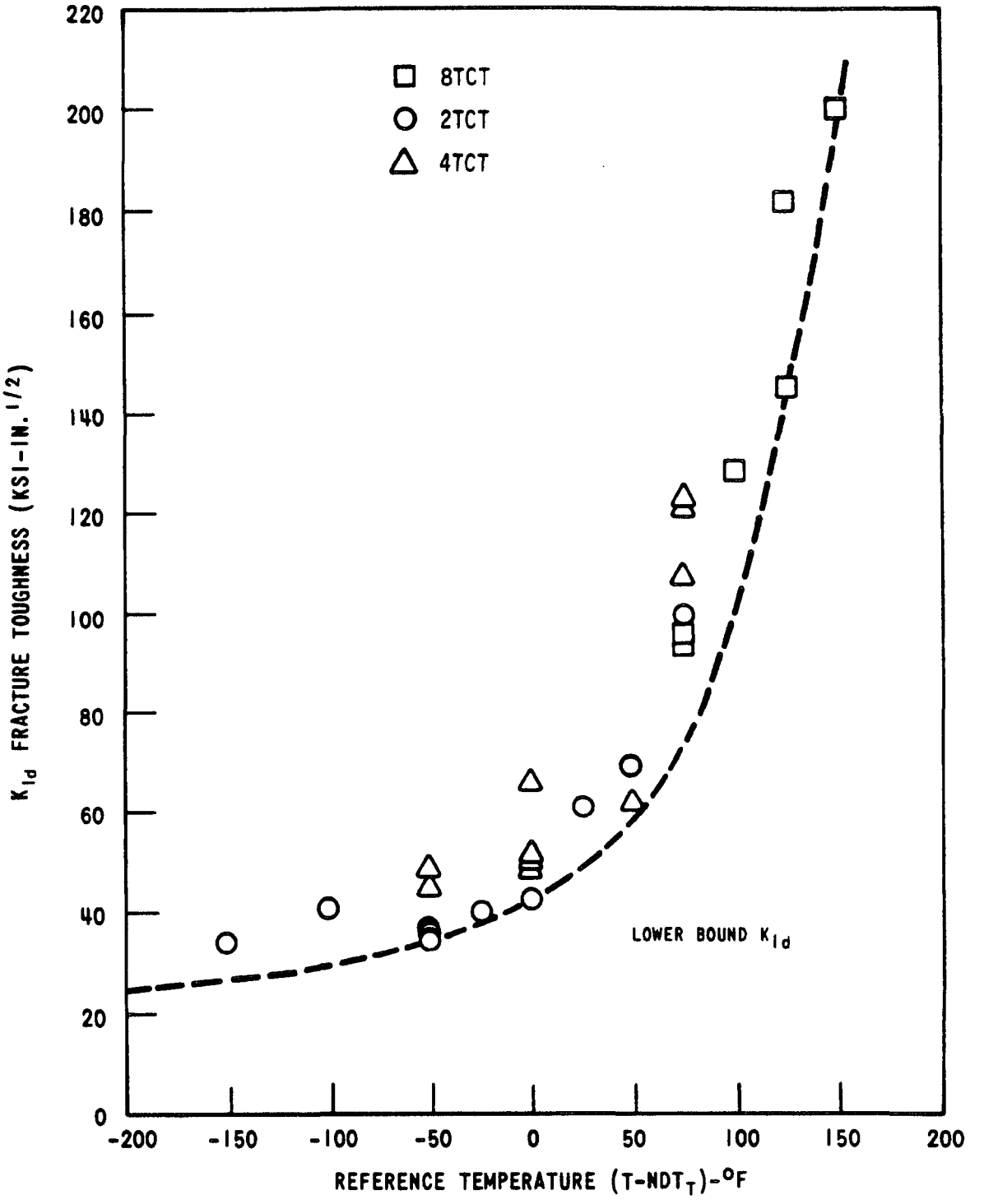

BYRON/BRAIDWOOD STATIONS
UPDATED FINAL SAFETY ANALYSIS REPORT

FIGURE 5.4-3

K_{ID} LOWER BOUND FRACTURE TOUGHNESS A533V (REFERENCE WCAP 7623) GRADE B CLASS 1

Figure 5.4-4 has been deleted intentionally

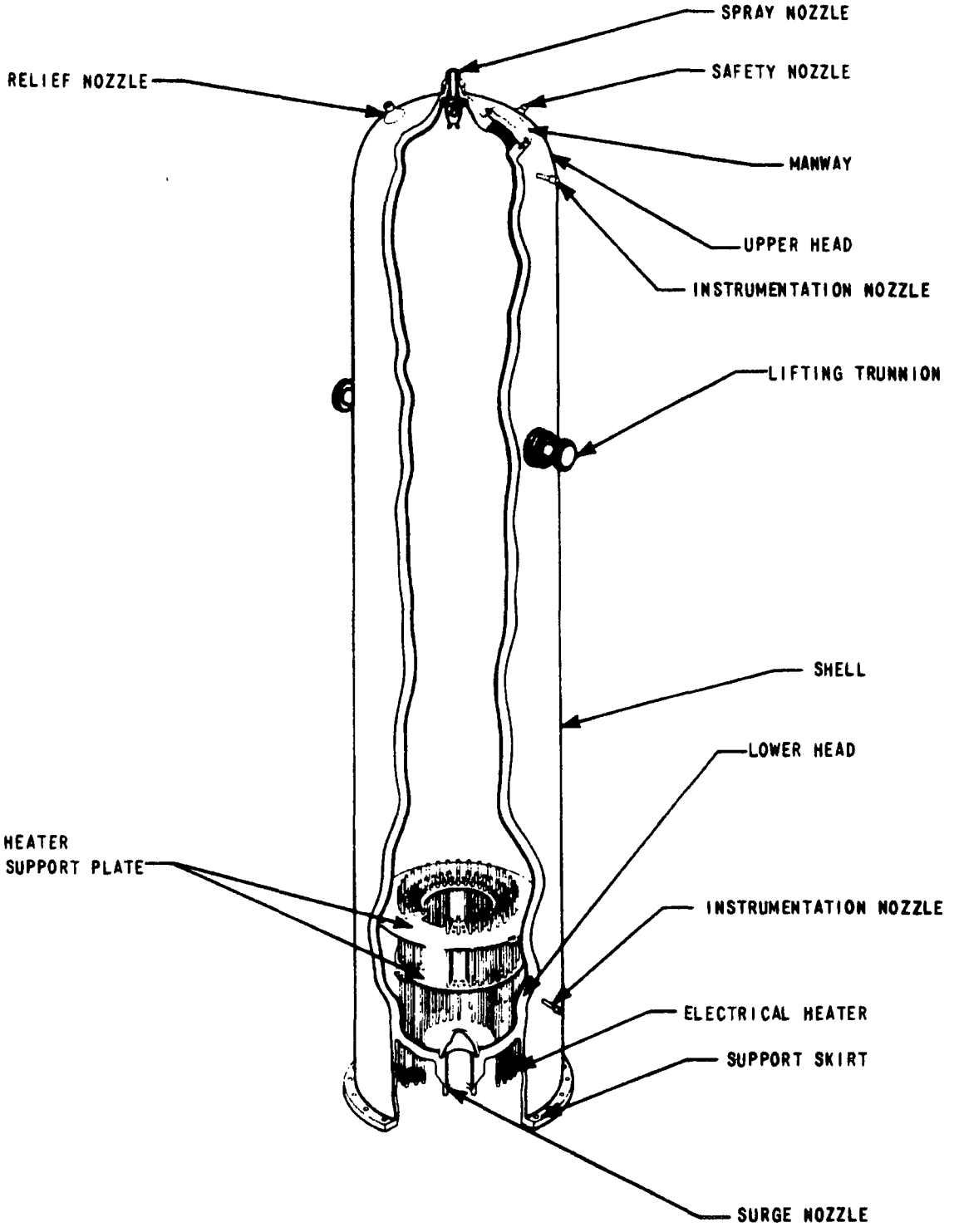

BYRON/BRAIDWOOD STATIONS
UPDATED FINAL SAFETY ANALYSIS REPORT

FIGURE 5.4-5

PRESSURIZER

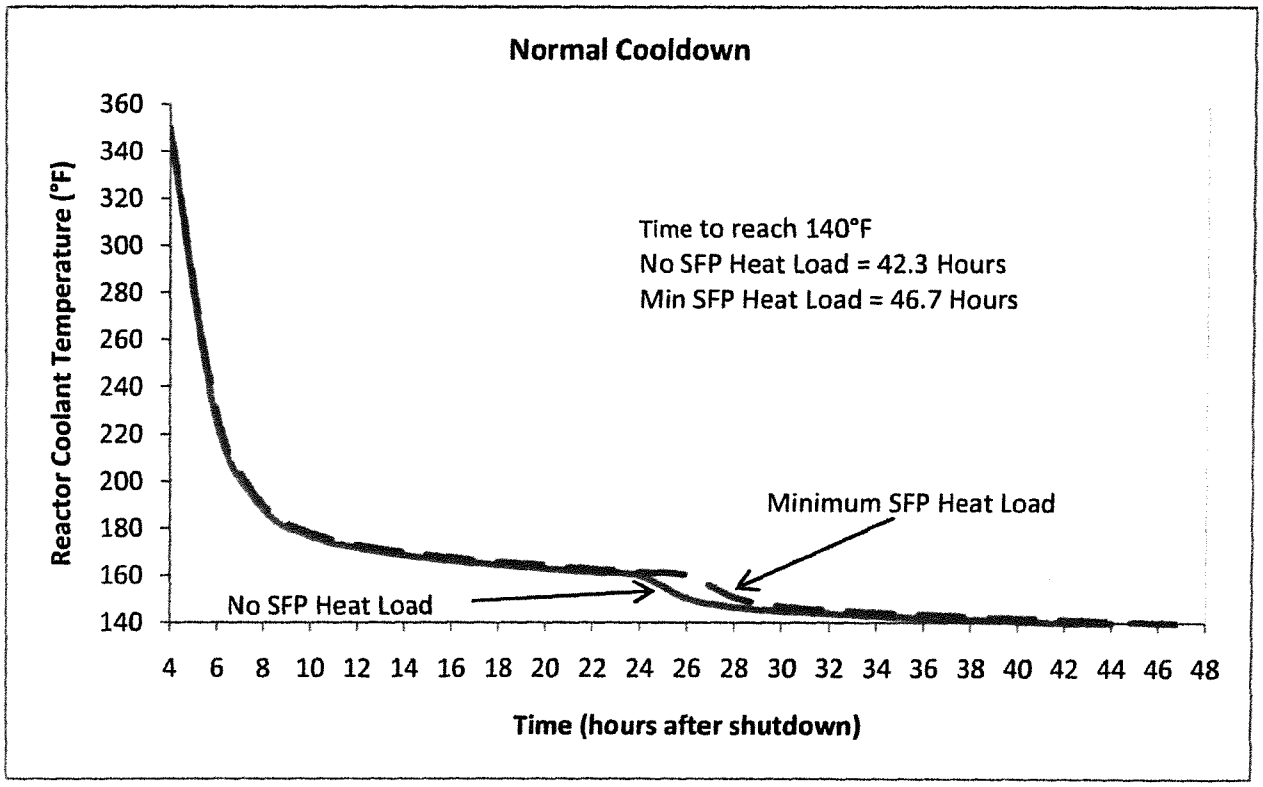

BYRON/BRAIDWOOD STATIONS
UPDATED FINAL SAFETY ANALYSIS REPORT

FIGURE 5.4-6

REACTOR COOLANT TEMPERATURE VS TIME
(NORMAL COOLDOWN)

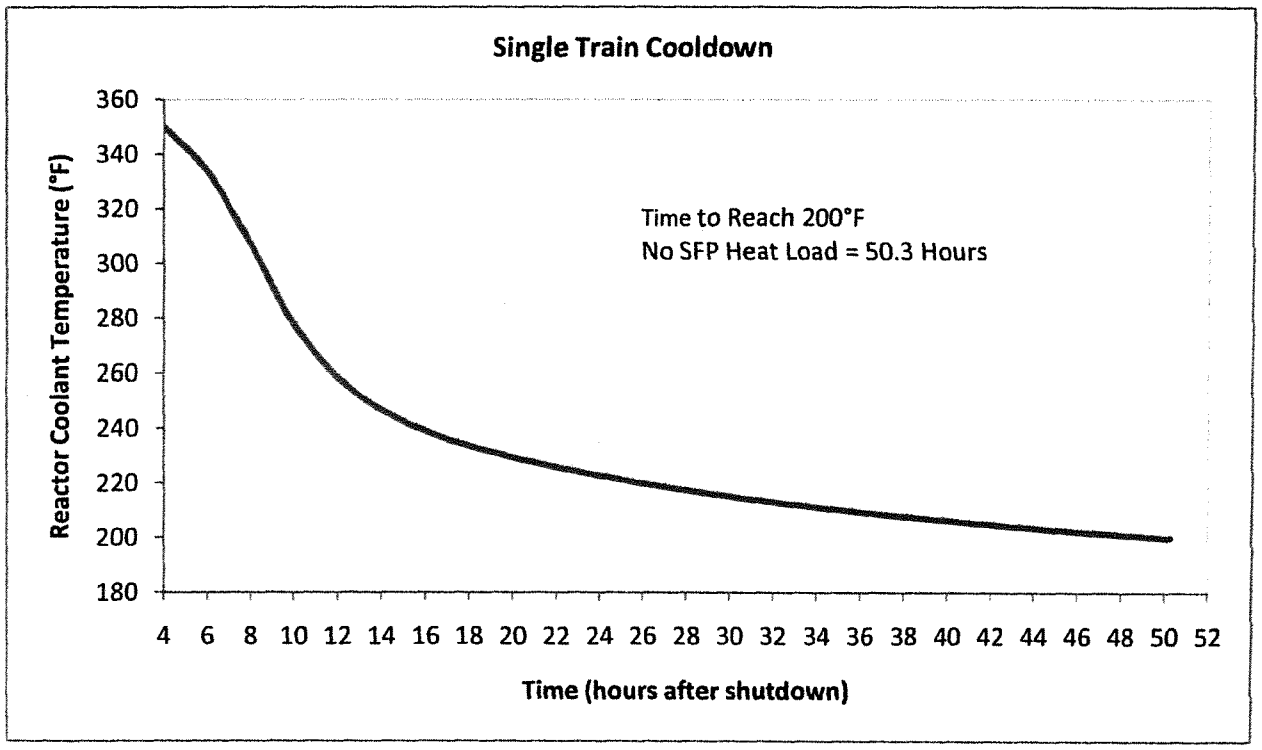

BYRON/BRAIDWOOD STATIONS
UPDATED FINAL SAFETY ANALYSIS REPORT

FIGURE 5.4-7

SINGLE RHR TRAIN RC
TEMPERATURE VERSUS TIME

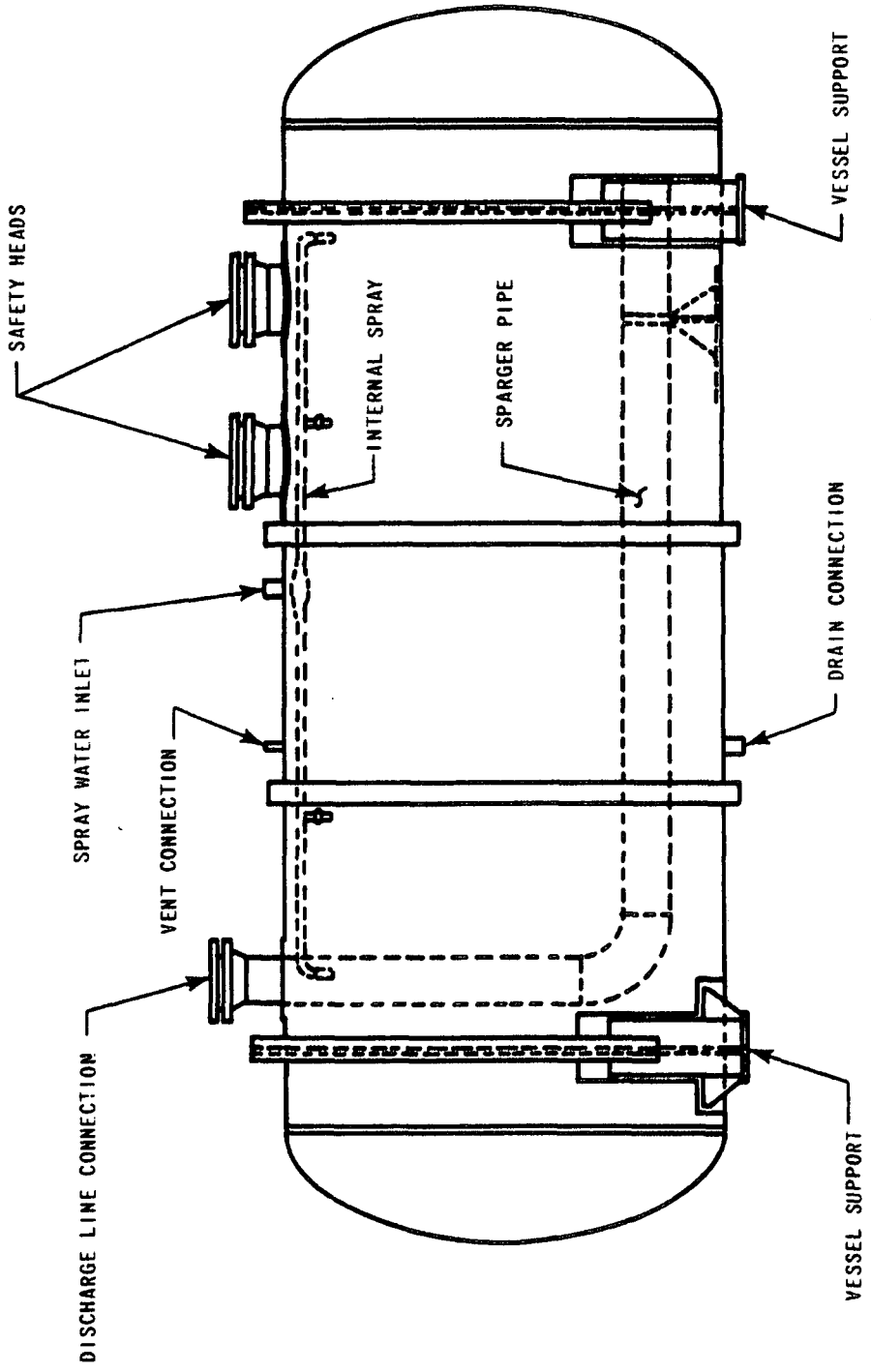

BYRON/BRAIDWOOD STATIONS
UPDATED FINAL SAFETY ANALYSIS REPORT

FIGURE 5.4-8

PRESSURIZER RELIEF TANK

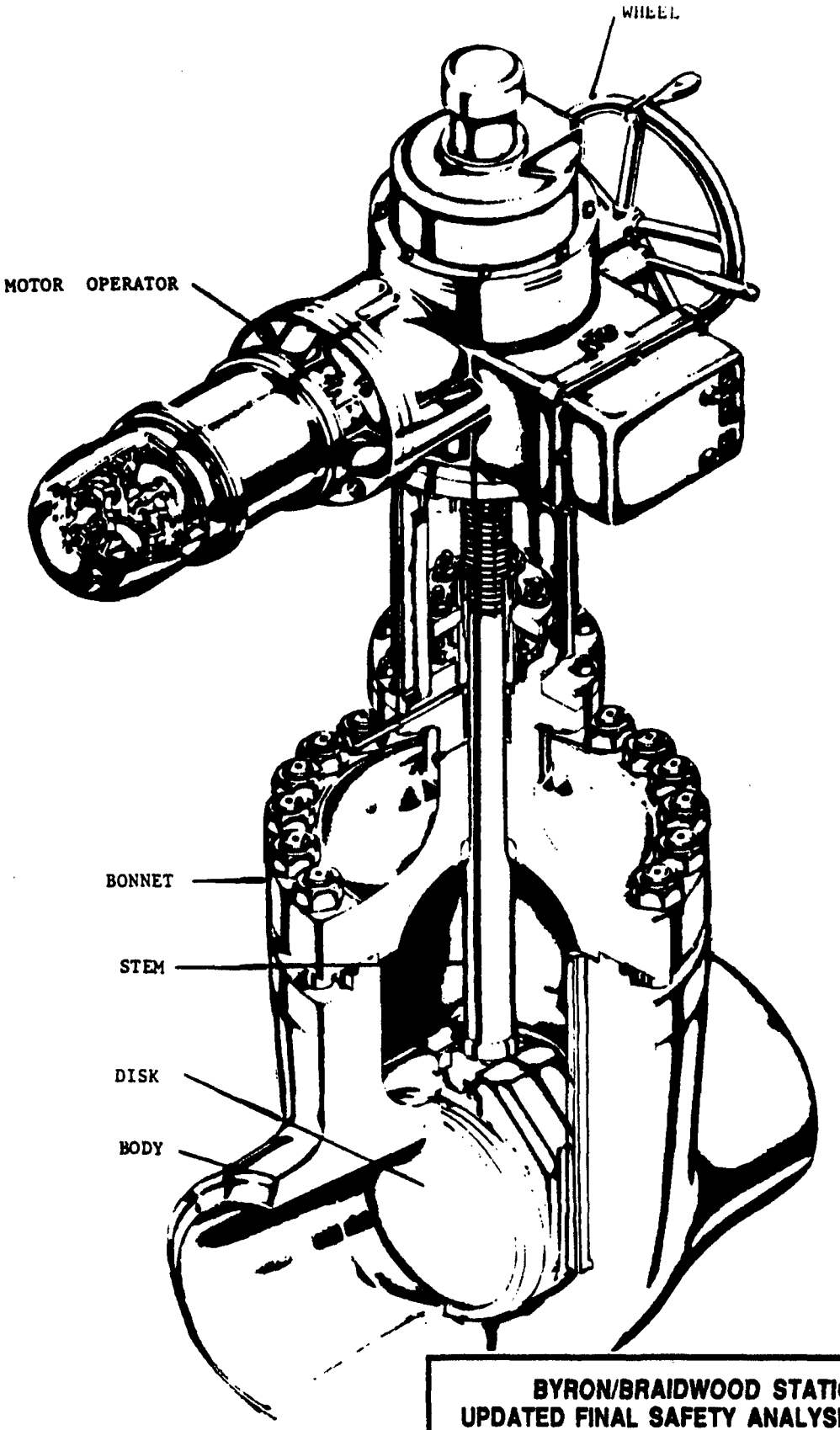

BYRON/BRAIDWOOD STATIONS
UPDATED FINAL SAFETY ANALYSIS REPORT

FIGURE 5.4-9

REACTOR COOLANT LOOP STOP VALVE

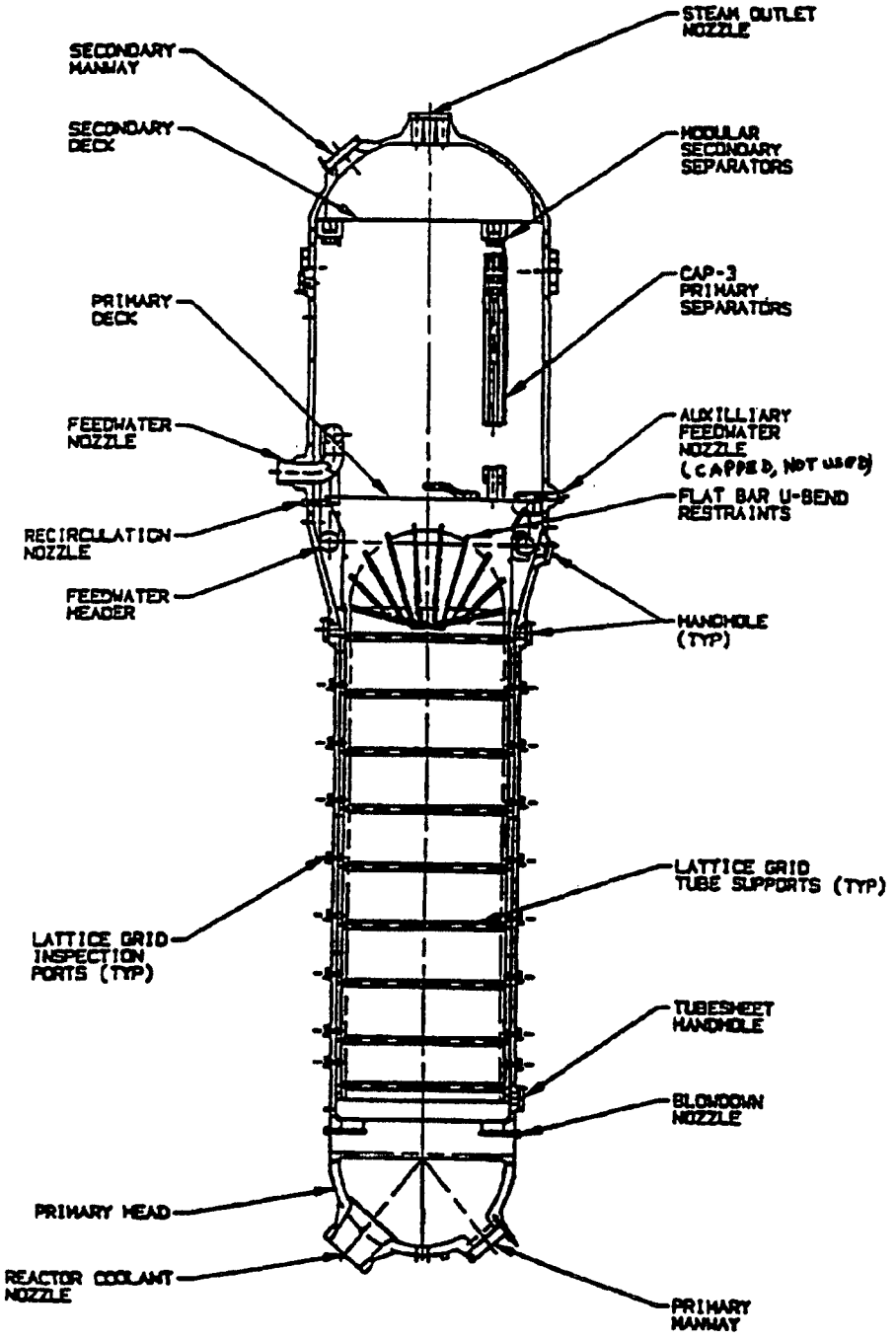

BYRON/BRAIDWOOD STATIONS
UPDATED FINAL SAFETY ANALYSIS REPORT

FIGURE 5.4-10

UNIT 1 STEAM GENERATOR

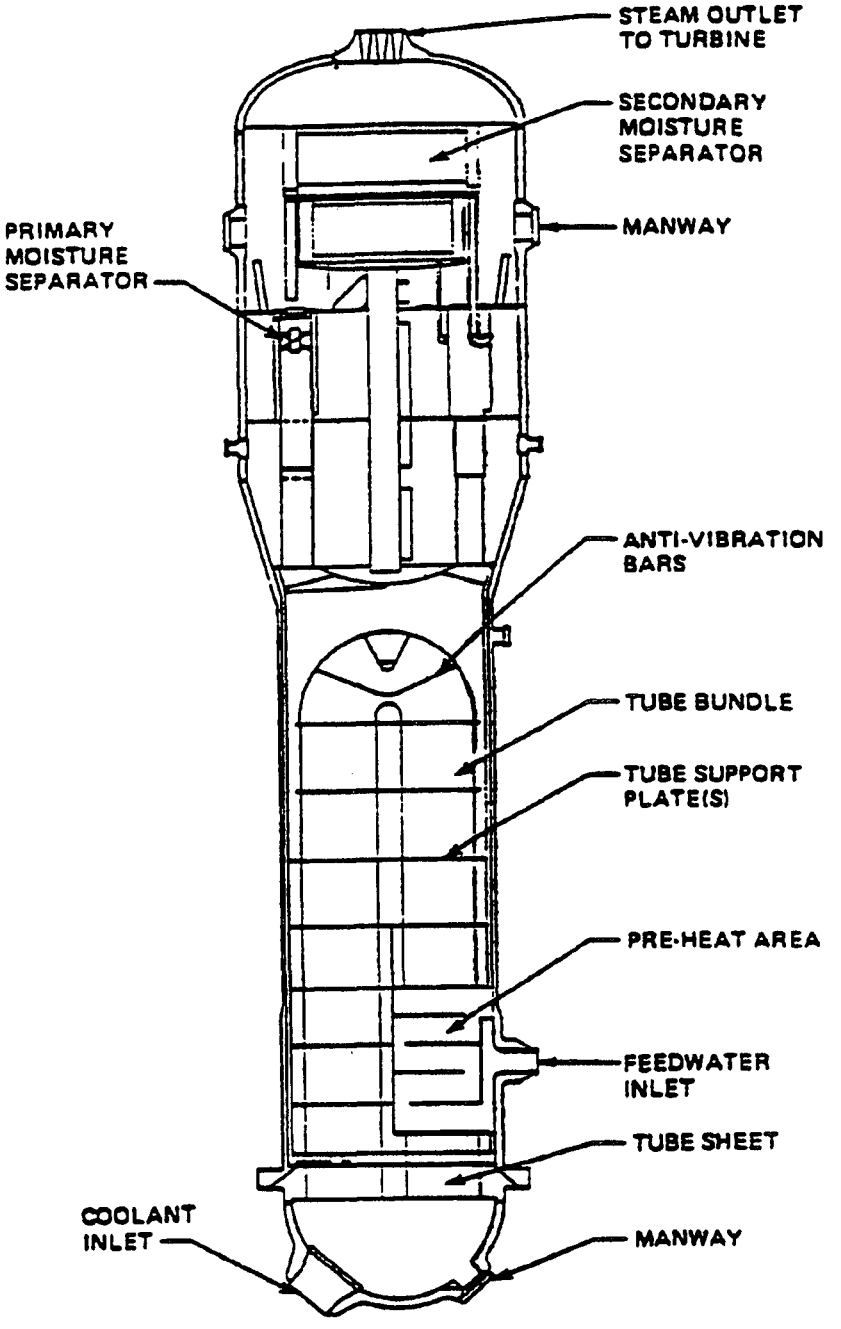

BYRON/BRAIDWOOD STATIONS
UPDATED FINAL SAFETY ANALYSIS REPORT

FIGURE 5.4-11

UNIT 2 STEAM GENERATOR