DWIGHT LOOK COLLEGE OF ENGINEERING

Department of Nuclear Engineering

TEXAS A&M UNIVERSITY

March 10, 2014

ATTN: Document Control Desk
U.S. Nuclear Regulatory Commission
Washington, DC 20555-0001

Docket No. 50-059

SUBJECT: RESPONSE TO "TEXAS A&M UNIVERSITY AEROJET GENERAL NUCLEONICS MODEL 201-MODIFIED REACTOR CONFIRMATORY ACTION LETTER REGARDING SHUTDOWN RELATED TO REACTOR SAFETY SYSTEM."

In response to the letter dated July 30, 2013, Texas A&M University (TAMU) is addressing concerns of the Nuclear Regulatory Commission (NRC) regarding the reactor safety system. To support the previous response dated December 17, 2013 and follow up phone call on January 13, 2014, the enclosed information will supplement the previous response to address additional concerns expressed by NRC staff members.

If you need additional information, please feel free to contact me at (979) 845-4161 or y-hassan@tamu.edu.

I declare under penalty of perjury that the foregoing is true and correct. Executed on March 10, 2014.

Best regards,

Yassin A. Hassan, Ph.D.
Sallie and Don Davis '61 Professor of Nuclear Engineering
Head, Department of Nuclear Engineering

encl.

337 Zachry Engineering Center
3133 TAMU
College Station, TX 77843-3133

Tel. 979.845.4161 Fax. 979.845.6443
nuclear.tamu.edu

A020
NRR

Safety Channel Monitoring

During reactor operations primary indication of reactor power level will be monitored on the "Channel Display and Rod Position Indicators" panel. Safety and control rod control switches will be positioned in the area just below this panel to maximize the reactor operator(s) ability to monitor safety channels during operation. Previously, rod control switches were located below the digital user interface which could potentially distract the operator from monitoring the appropriate safety channel indications. Operator training will also reflect the importance of utilizing primary indications of reactor power to evaluate the need for manual operator action.

Failure Propagation

Installation of a multi-stage op-amp buffer will prevent failure propagation from the digital secondary indication system to the analog reactor protection system. Both Channel 2 and Channel 3 will incorporate this multi-stage buffer to ensure independence of the reactor protection system (RPS) from the secondary digital indication system. An op-amp model is presented in Figure 1.

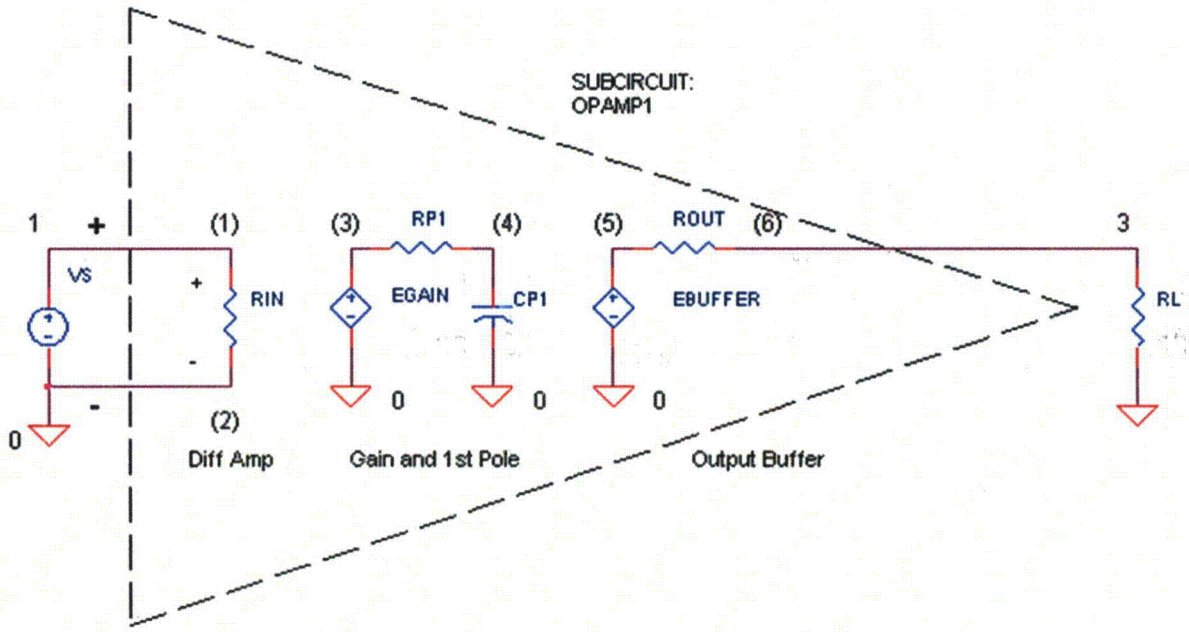

Figure 1: Op-Amp model

The first stage of the op-amp circuit is a current follower detailed in Figure 2. The current follower is designed to convert the detector output current to voltage for further signal processing. The large input impedance of the op-amp ensures the signal remains unaffected. The input of the op-amp does not load the voltage source and draws only minimal current. The very low output impedance of the op-amp drives the load as if it were a perfect voltage source. Texas Instruments (TI) LMP2022 op-amp was selected for use as the current follower stage because of its high level of precision in high accuracy applications. The LMP2022 is a dual precision operational amplifier offering ultra-low input offset voltage (0.4 μV), near zero input offset voltage drift (0.004 μV/°C), very low input voltage noise and very high open loop gain. The LMP2022 also features a continuous correction circuit that provides a CMRR of 139dB and a PSRR of 130 dB, removes the 1/f noise component, and eliminates the need for extensive calibration. This op-amp is also suitable for low frequency use.

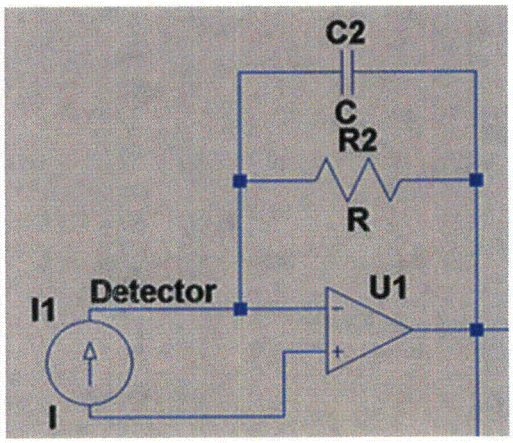

Figure 2: Current follower

A simple buffer stage, outlined in Figure 3, is used to provide the same signal to the digital circuit. This buffer stage ensures that any malfunction of the digital system will not impede the reactor protection system from performing its design function. Selection of TI OPA2180 op-amp was made for the prototype circuit because of the following specifications: low offset voltage (75μV max), zero-drift (0.1μV/°C), low noise (10nV/√Hz), and high input impedance ($6x10^{12}\Omega$).

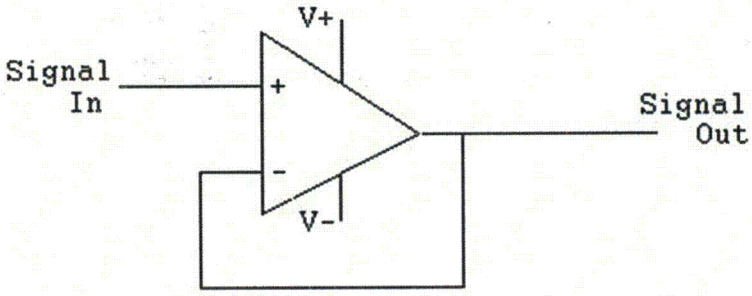

Figure 3: Op-amp buffer for digital circuit

In Figure 4, the stages of the buffer circuit are displayed. Op-amp U1 acts as a current follower. Low pass buffer U2 provides the analog signal to the RPS. The digital circuit receives a signal using buffer U3. High input impedance of U3 allows the analog circuit to remain unaffected by the digital circuit. Failure of any portion of the digital circuit will not affect the analog side. In case of a buffer failure for digital side, the inherent high impedance of the input will provide isolation from the analog side. In case of random failures elsewhere in the analog circuit, there are several stages. First stage to detect the error would be the comparator. When signal is out of bounds, the scram signal is automatically generated. If the failure were to happen in the comparator stage, the inherent loss of the signal would cause a scram.

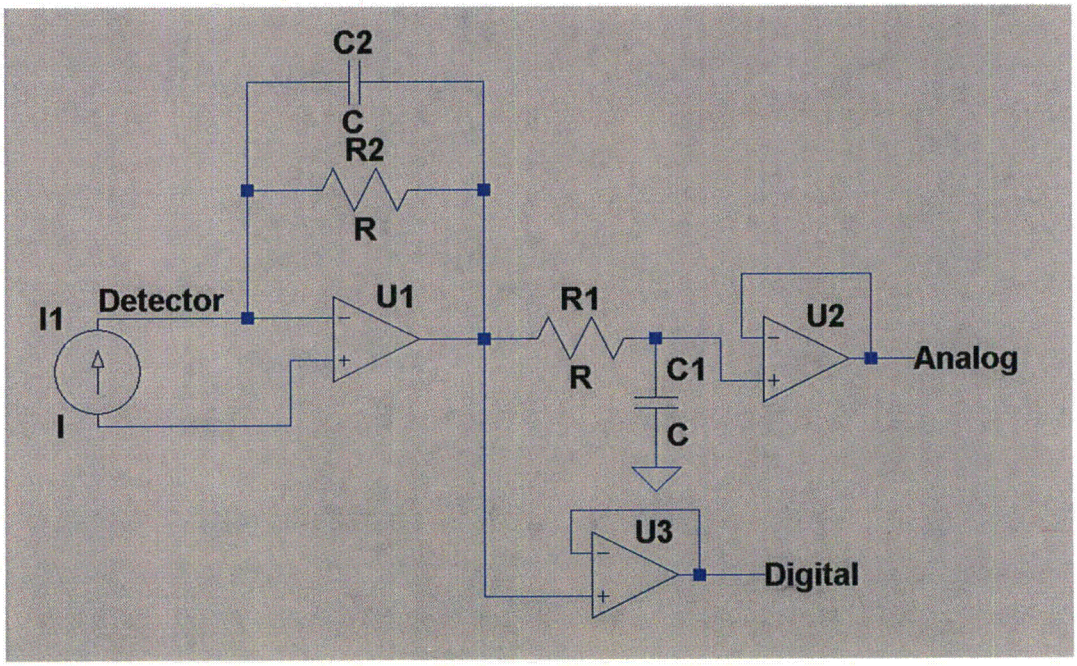

Figure 4: Current follower with analog and digital buffers

Channel 2 (Log Channel)

The original Keithley Model 420 Log n Amplifier and Period Meter consists of logarithmic micro-micro ammeter followed by a differentiator to indicate the period. Dampening of the signal is implemented using a combination of diodes, resistors, and capacitors. The logarithmic scale is obtained by negative feedback from output to input through a diode whose emission is limited by negative plate-cathode voltages. The diode used is the grid-filament structure of a type 5886 electrometer tube (Keithley 420 manual, Cleveland, Ohio). Calibration supply current is built into the unit with front panel adjustment for calibration. Calibration test signals of 10^{-11} and 10^{-7} ampere are available. Keithley Model 420 provides analog outputs to be implemented for use in comparator and meter circuits, providing input to the RPS.

The analog portion of the log channel will receive an input signal from the neutron detector. This signal is first processed by the low pass filter which filters out high frequency noise, including common 60 Hz interference. This filtered signal is passed to the averaging approximate filter to create a moving average approximation. The following equation will be used to implement this filter:

$$Ha(jw) = \frac{a_0 + a_1(jw) + a_2(jw)^2}{b_0 + b_1(jw) + b_2(jw)^2 + b_3(jw)^3}$$

The averaging circuit proposed is expected to provide similar results as in original instrumentation. The main operational difference is the inability for operator adjustment. The original unit allows for calibration of the damping circuit, while proposed circuit will not be adjustable after initial setup.

The log amplifier enables log representation of the input signal by converting the output signal through the following method:

$$Vout = \text{Log}\left(\frac{Iin}{Iref}\right)$$

The log amplifier consists of a series of op-amps connected internally to shape the input signal to a logarithmic output. The original instrument relied on properties of the electrometer tubes to provide a logarithmic output, while proposed circuit implements a commercially available log amplifier supplied by Texas Instruments.

Log output signal will then be used to calculate reactor period, provide input to the RPS, and display reactor power level. The reactor period will be calculated using a derivative configuration using the following equation:

$$Vout = -RC\left(\frac{dVin}{dt}\right)$$

Due to the output of the derivative being180° out of phase; an analog inverter is included in the design. Calculation of the reactor period is accomplished using an identical technique as the Keithley Model 420. The main difference is the use of operational amplifiers supplied by Texas Instruments instead of electrometer tubes.

The output signal of the log amplifier will also be sent to a high and low power comparator to determine if a safety shutdown should occur given the input. The log amplifier also drives indication of reactor power while the derivative function provides input to reactor period indication. Functionality of the system remains similar to the originally implemented system which use comparators to initiate a scram signal.

Channel 3 (Linear Channel)

The Keithley Model 410 Micro-micro ammeter is a line operated vacuum tube electrometer designed and constructed for measuring small currents. The original circuit drives the display meter and provides input to the RPS.

The analog portion of the linear channel will receive an input signal from the neutron detector. This signal is first processed by the current follower which converts the current to voltage. An op-amp supplied by Texas Instruments is used for the current follower because of the high precision and low noise. The LMP2022 proposed is a dual precision operational amplifier offering ultra-low input offset voltage, near zero input offset voltage drift, very low input voltage noise, and very high open loop gain. The LMP2022 has only 0.004 μV/°C input offset voltage drift and 0.4 μV input offset voltage. It also features a continuous correction circuit that provides impressive CMRR and PSRR, removes the 1/f noise component, and eliminates the need for extensive calibration. Accuracy of the current follower stage is to be greater than original 4% overall accuracy of Keithley Model 410. This voltage is filtered to remove high frequency noise, including common 60 Hz interference. The filtered signal is amplified to increase the gain for further processing. The output signal of the amplifier is sent to a high and low power comparator to determine if a safety shutdown should occur given the input. Additionally, the amplified signal is passed to an automatic scale selector that will indicate the decade of power the linear meter face is indicating.

Component Quality

High quality components utilized to fabricate the analog portions of Channel 2 and Channel 3 circuits have been procured from Allied Electronics. The op-amps used are sourced from the Precision Amplifier Group at Texas Instruments.

Reactor Protection System Set Points

Annual reactor calibration will continue to be conducted with current facility maintenance procedures. Shortly after reactor calibration, Channel 2 and Channel 3 circuits will be calibrated utilizing reactor calibration results along with an external current source. At this time the associated reactor trips for each channel will also be tested in a similar manner as the currently approved method. Current calibration procedures will require only minor modifications to incorporate adjustment of the newly installed comparator potentiometers instead of the potentiometer adjustment associated with the prior channel drawer. Each RPS set point will be verified after the appropriate channel adjustment is made. Potentiometers will only be accessible from the rear of the control console and are to be adjusted only during maintenance calibration. Additional potentiometers will be used during initial circuit calibration. These potentiometers will be potted after initial calibration and will not be open for adjustment at a later time.

Qualifications of Consultant

Alfred Hanna, an independent consultant, has been retained to review circuit designs upon completion. He is a 2002 graduate of Texas A&M University Engineering Technology & Industrial Distribution Department, electronics option. Additionally, he has over seven years of electronics experience at university reactors including Texas A&M's Nuclear Science Center and AGN-201M reactor. He was a member of the electronics shop that was responsible for all troubleshooting, repair, and design of electronics at both reactor facilities. He is currently a Senior Consultant at CentennialArts located in Bryan, Texas.

Safety Analysis

Installation of the modifications to Channel 2 and Channel 3 of the AGN-201M Reactor will perform safety functions in a similar manner and have the same or better functionality than the currently reviewed system. The installation of improved analog components previously outlined has no effect on the timing requirements set forth in the facility Technical Specifications. Furthermore, no single random failure of the system will result in the RPS losing its ability to carry out its intended function of safely shutting down the reactor.

The upgraded analog circuitry will perform their intended function reliably during the normal range of environmental conditions anticipated at the AGN reactor facility. The requirements for redundancy, diversity, and independence will continue to be met with the upgraded analog circuits. Channel 2 and Channel 3 circuits will continue to receive their input signal from independent neutron detectors located in the core tank. Additionally, each channel will continue to have independent safety system components that determine whether or not an automatic shutdown is required per Table 3.1 of the facility Technical Specifications. Channel 2 and Channel 3 will continue to provide independent, redundant, and diverse measurements of neutron flux through the licensed power range.

Relative rod position will continue to be monitored through the Visual Basic user interface. In the event that rod position indication is lost or unresponsive, the operator will be required to perform a manual reactor scram. Facility operating procedures will be modified to include operator actions in the event that relative rod position is lost or unresponsive during normal operations. Installation a hardwired rod position indication will ensure the operator can verify that all rods have been removed from the core.