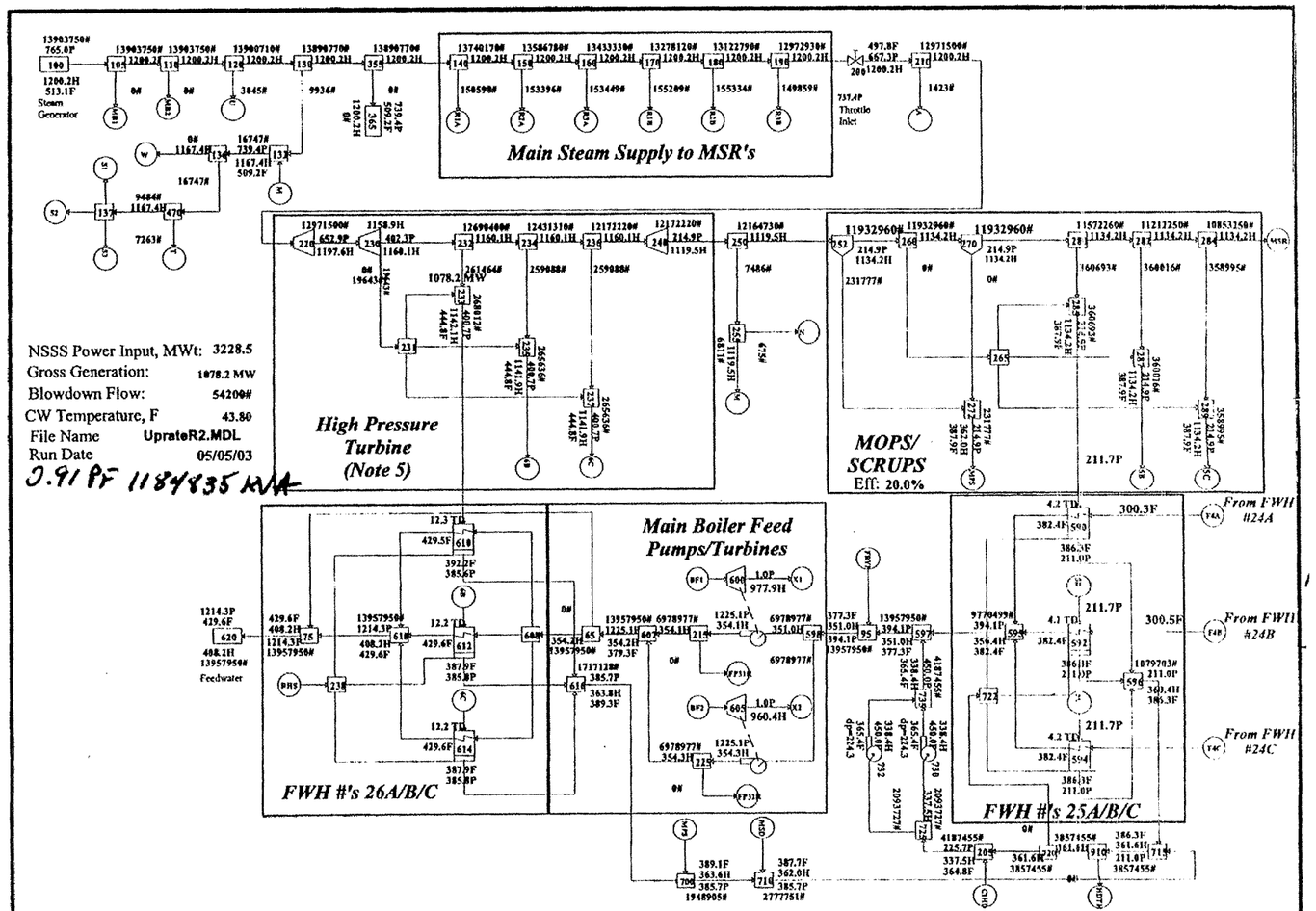

Uprate PEPSE Model with New HP Turbine
High Pressure Turbine Expansion **Sheet 1 of 6**

Entergy Indian Point 2 Nuclear Power Plant

INDIAN POINT UNIT No. 2	
UPRATE PEPSE MODEL WITH NEW HP TURBINE HIGH PRESSURE TURBINE EXPANSION	
UFSAR FIGURE 10.1-1a	REV. No. 21

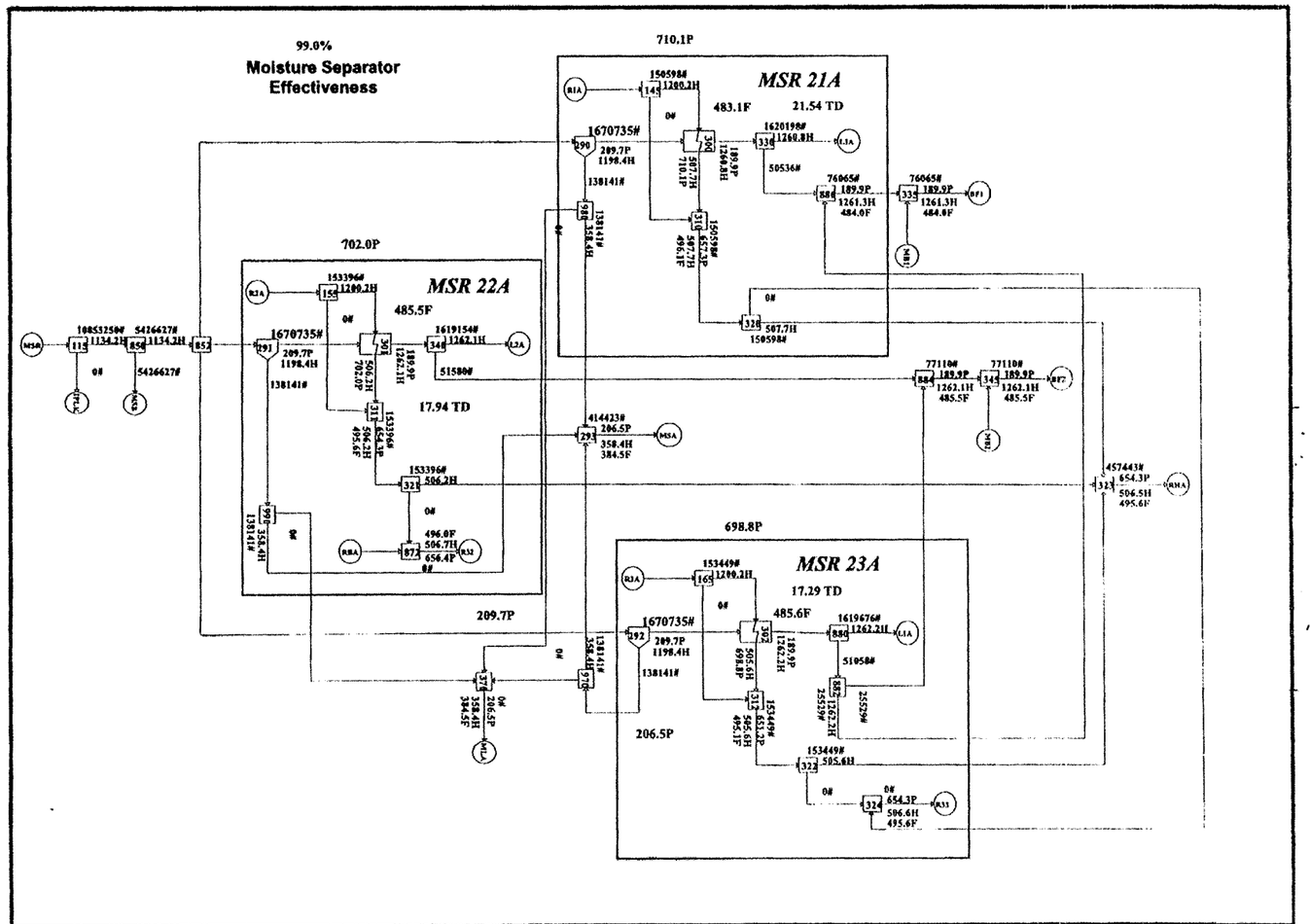

Uprate PEPSE Model with New HP Turbine Moisture Seperator Reheater Train A Sheet 2 of 6

Entergy

Indian Point 2
Nuclear Power Plant

INDIAN POINT UNIT No. 2

UPRATE PEPSE MODEL WITH NEW HP TURBINE MOISTURE SEPERATOR REHEATER TRAIN A

UFSAR FIGURE 10.1-1b | REV. No. 21

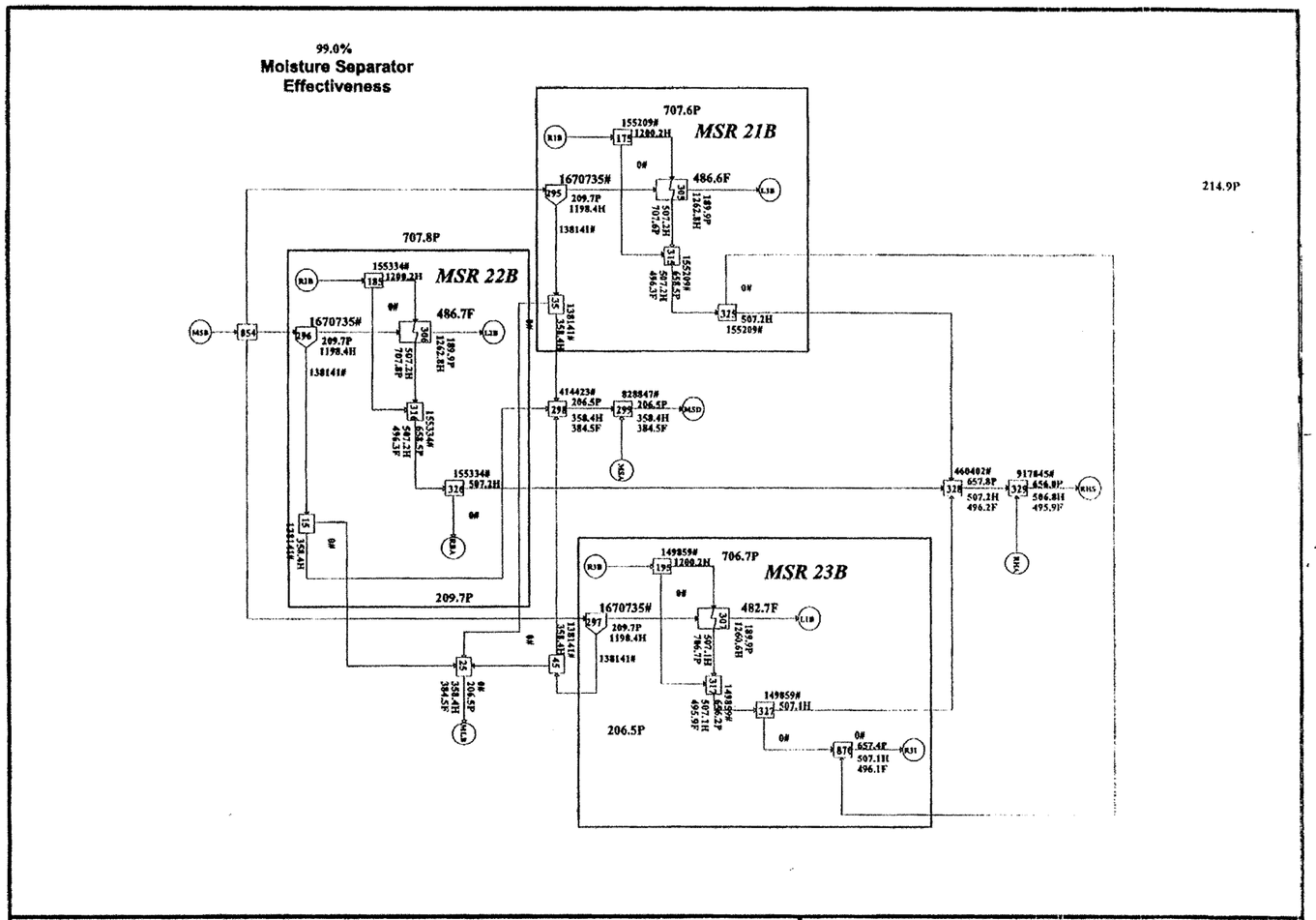
99.0%
Moisture Separator
Effectiveness
MSR 21B
707.6P
MSR 22B
707.8P
MSR 23B
706.7P
214.9P
209.7P
206.5P
482.7F
486.7F
1670735#
209.7P
1198.4H
138141#
1553348
507.2H
1553348
507.2H
1553348
507.2H

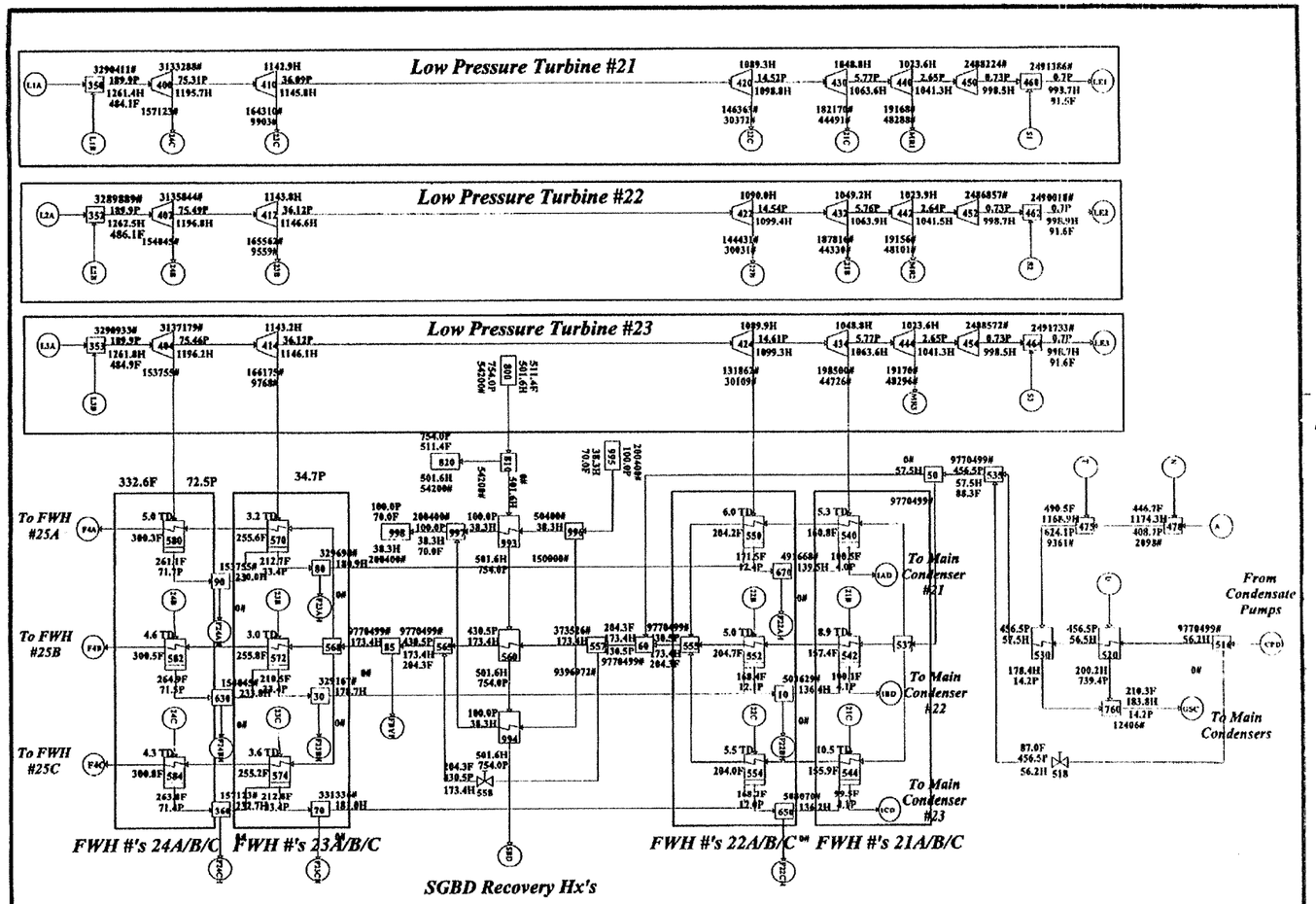

Uprate PEPSE Model with New HP Turbine
Low Pressure Turbine Expansion **Sheet 4 of 6**

Entergy Indian Point 2 Nuclear Power Plant

INDIAN POINT UNIT No. 2	
UPRATE PEPSE MODEL WITH NEW HP TURBINE LOW PRESSURE TURBINE EXPANSION	
UFSAR FIGURE 10.1-1d	REV. No. 21

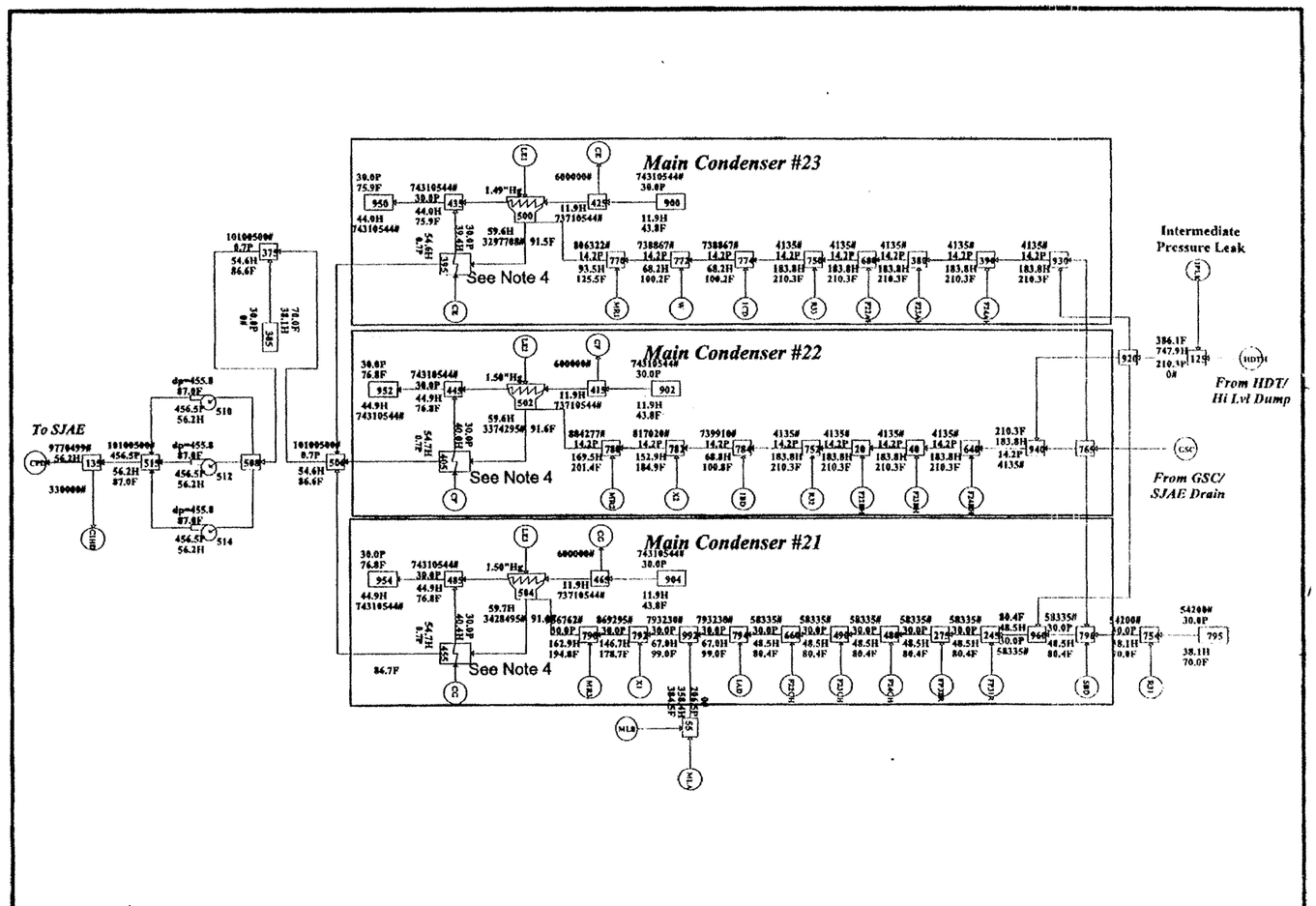

Uprate PEPSE Model with New HP Turbine Main Condensers — Sheet 5 of 6

Entergy — Indian Point 2 Nuclear Power Plant

INDIAN POINT UNIT No. 2	
UPRATE PEPSE MODEL WITH NEW HP TURBINE MAIN CONDENSERS	
UFSAR FIGURE 10.1-1e	REV. No. 21

CIRCULATING WATER TEMPERATURES
INLET, F: 43.80 OUTLET #21:

NOTES:

1. This model runs Data Sets 1, 6, 5 and 16 in that order. S&W changes are in Data Set 16, or else in the last set where the data are entered.

2. OPVB 12 is the input for Circ Water Inlet Temp. Operations 103-105 set this value for the CW sources.

3. This heat balance should not be used to predict pressures in the condensate and feedwater system. The hydraulic performance has not been tuned to reflect actual plant conditions.

4. Hotwell subcooling is modeled by means of fictitious heat exchangers (Component Numbers 395, 405, 455) in the condensate line at the condenser exit. For the uprate case 5 Deg F subcooling has been assumed

5. New HP turbine is tuned to match turbine parameters per Siemens-Westinghouse heat balance WB-9341

6. The reheaters are modeled using the simplified design mode components of PEPSE 66. In this representation the heat transfer coefficients are fixed at the values established for the Benchmark Tuning Model, representative of pre-uprate performance. The heat transfer coefficients are expected to be somewhat higher after uprate.

Uprate PEPSE Model with New HP Turbine Notes and Significant Results **Sheet 6 of 6**	***Entergy***	Indian Point 2 Nuclear Power Plant

INDIAN POINT UNIT No. 2
UPRATE PEPSE MODEL WITH NEW HP TURBINE NOTES AND SIGNIFICANT RESULTS
UFSAR FIGURE 10.1-1f | REV. No. 21

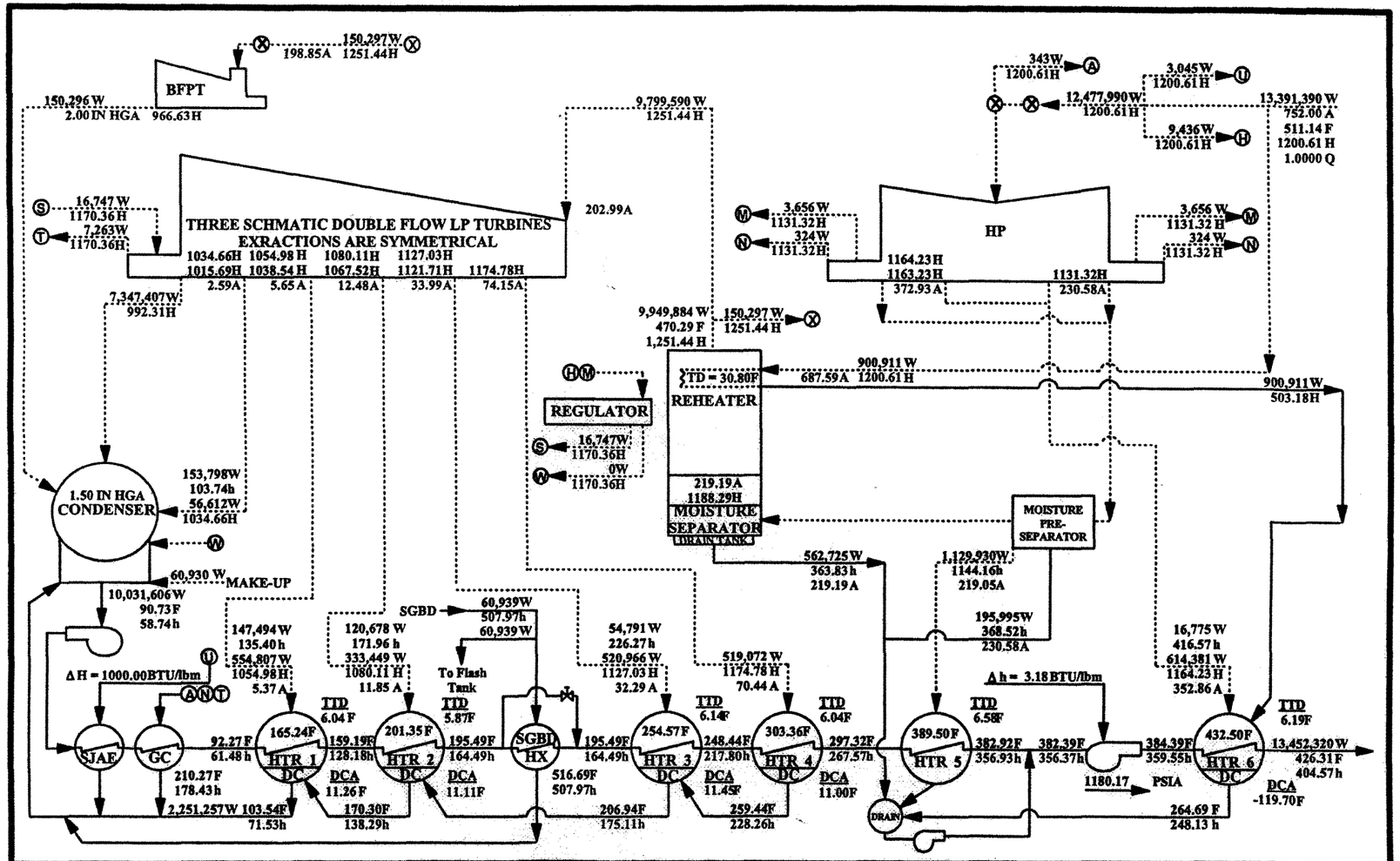

NET HEAT RATE = $\frac{13{,}452{,}320(1200.61 - 404.57) - 60{,}939(1200.61 - 507.97)}{1{,}034{,}072}$

= 10,314.92BTU / KW HR

1) Calculations are based on no radiation losses to heaters or extraction piping located in the condenser neck.
2) Primary valve and above heat rates are calculated on locus of valve points.

TEP =	992.08	BTU/lbm
ELEP =	974.56	BTU/lbm
MECH LOSS =	3.656	KW
ELECT LOSS =	8.565	KW
0.91 PF	75# H2	
FWP POWER =	12,545	KW
FWP EFF =	85.00	%

1028612 KW TURB - GEN UNIT TC6F - 45 IN.
668 PSIA - 497.9 F 1.5 IN.HGA
1439200 KVA 0.91 PF 22000 VOLTS 75# H2

1,034,072 KW NET LOAD HEAT BALANCE
101.40% Rx Power

INDIAN POINT UNIT No. 2

UFSAR FIGURE 10.1-7

LOAD HEAT BALANCE DIAGRAM
AT 1,034,072 KWE

UFSAR FIGURE 10.1-7 | REV. No. 19

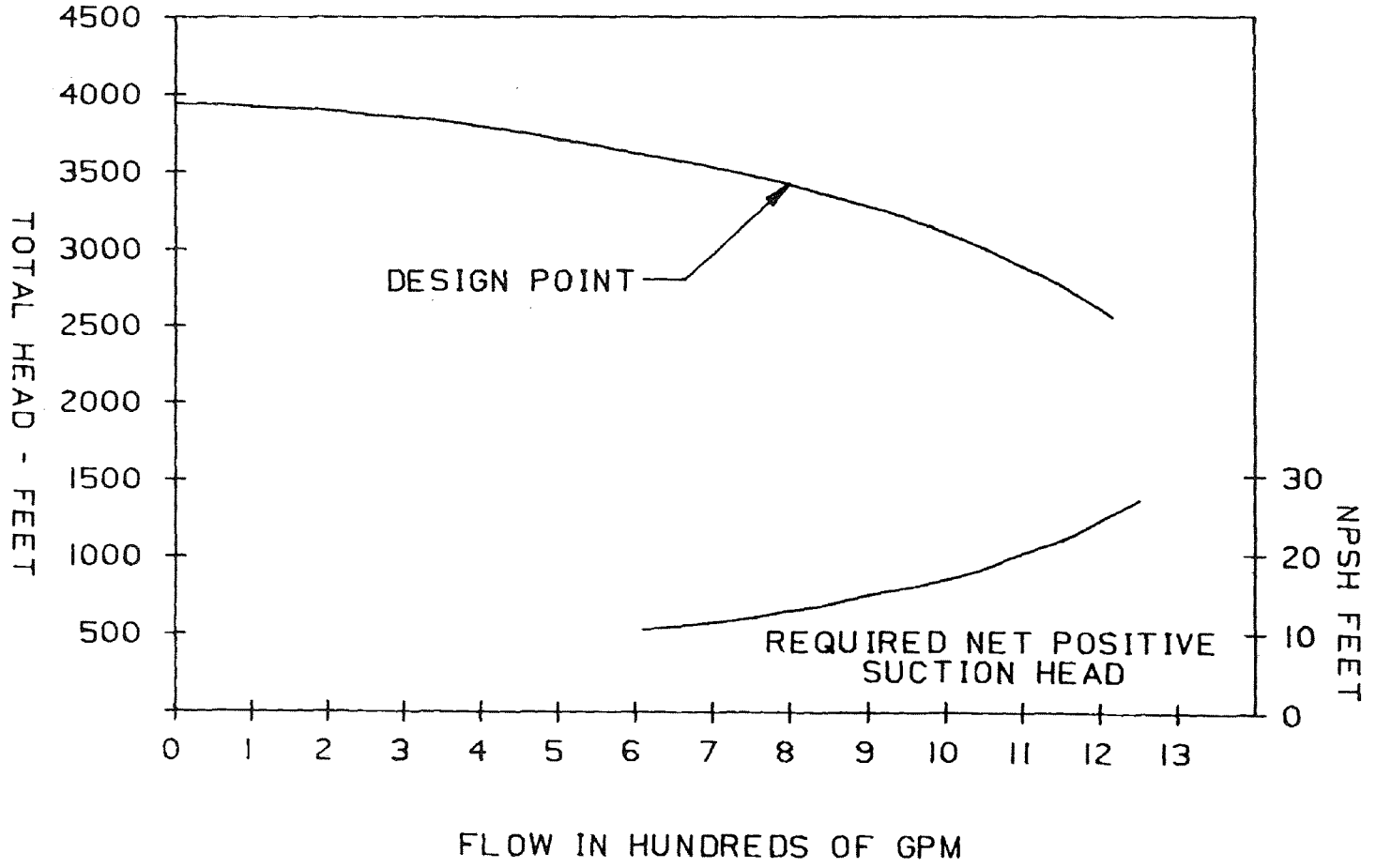

INDIAN POINT UNIT No. 2	
UFSAR FIGURE 10.2-8 STEAM TURBINE-DRIVEN AUXILIARY FEEDWATER PUMP ESTIMATED PERFORMANCE CHARACTERISTICS	
MIC. No. 1999MC3918	REV. No. 17A

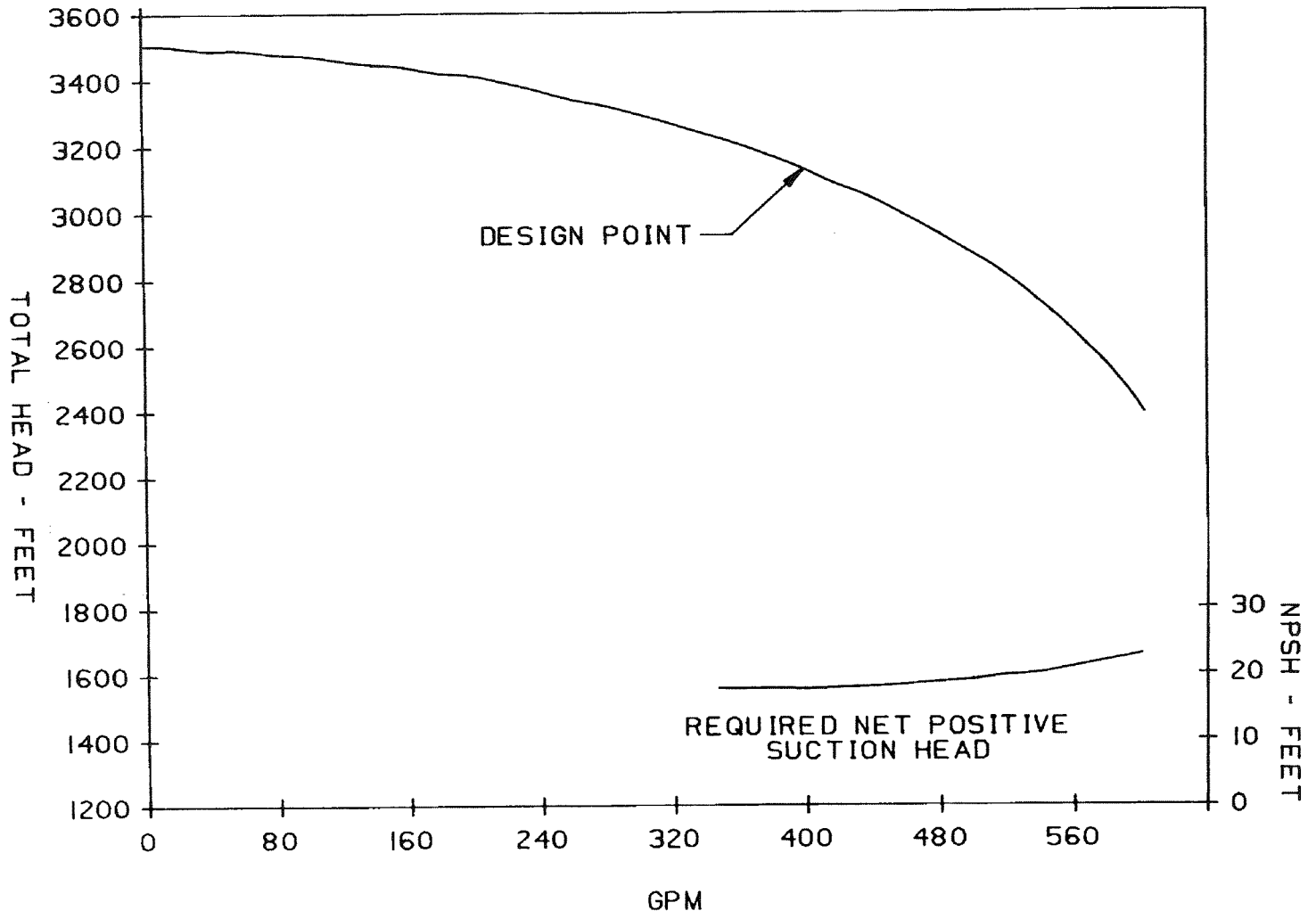

INDIAN POINT UNIT No. 2	
UFSAR FIGURE 10.2-9 MOTOR-DRIVEN AUXILIARY FEEDWATER PUMP ESTIMATED PERFORMANCE CHARACTERISTICS	
MIC. No. 1999MC3919	REV. No. 17A