REVISIONS	
	0

THIS REV. IS NON-CLASS. AS PER CI-240-1 RELEASED FOR INFO ONLY PN 32357 4-24-85

V.I. 4/18/99 | 01

THIS REVISION IS NON-CLASS PER CI-240-1 UPDATED DWG. TO INCLUDE UFSAR FIG. NO. IN TITLE P/N 69911-NP RELEASED FOR RECORD DLA 4/18/99

STRATUS ENGINEERING

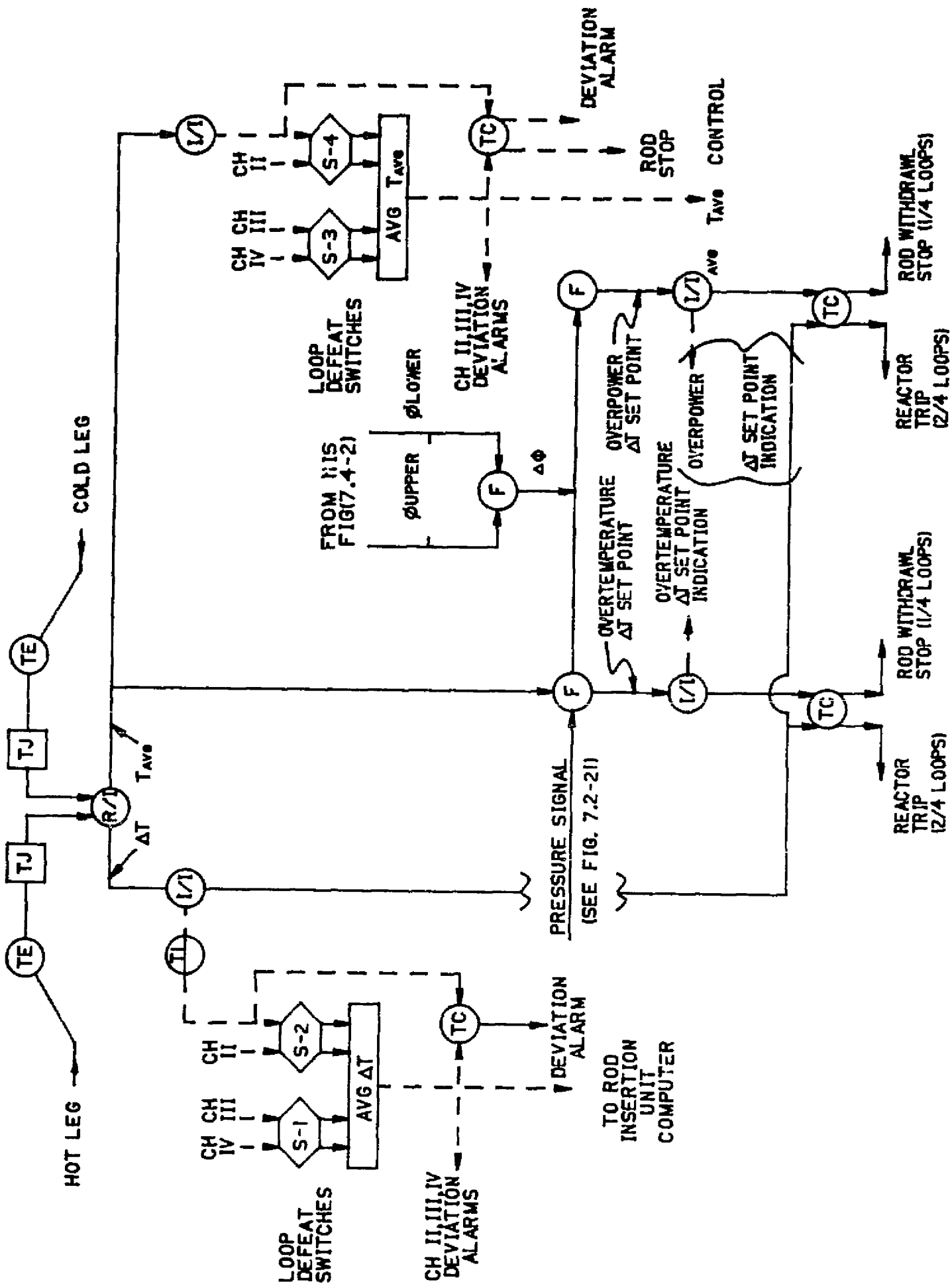

$T_{AVG}/\Delta T$ CONTROL AND PROTECTION SYSTEM
(SINGLE CHANNEL)

01

MI

STATION- INDIAN POINT 2 (UFSAR FIGURE NO. 7.2-34)	APPROVALS	CHIEF DESIGN ENG. 2/14/89	CONSOLIDATED EDISON CO. OF N.Y., INC.
		DE ENG. 9/9/85	DWG. NO. E 243330-01
DRAWN BY KCPEU CHECKED		ENG. 9/10/85	RECORDED
SCALE NONE J. O. 32357-00			

57952

929D6 GEN ENG.

LOGIC SYMBOLS

(REF: NEMA STANDARD IC1-OCT. 1961)

SYMBOL	LOGIC FUNCTION	
2/2	AND	A DEVICE WHICH PRODUCES AN OUTPUT ONLY WHEN EVERY INPUT IS ENERGIZED.
	NOT	A DEVICE WHICH PRODUCES AN OUTPUT ONLY WHEN THE INPUT IS NOT ENERGIZED.
1/2	OR	A DEVICE WHICH PRODUCES AN OUTPUT WHEN ONE INPUT (OR MORE) IS ENERGIZED.
	OFF-RETURN MEMORY	A DEVICE WHICH RETAINS THE CONDITION OF OUTPUT CORRESPONDING TO THE INPUT LAST ENERGIZED EXCEPT UPON INTERRUPTION OF POWER IT RETURNS TO THE OFF CONDITION.
	RETENTIVE MEMORY	A DEVICE WHICH RETAINS THE CONDITIONS OF OUTPUT CORRESPONDING TO THE INPUT LAST ENERGIZED.
	ADJUSTABLE TIME DELAY ENERGIZING	A DEVICE WHICH PRODUCES AN OUTPUT FOLLOWING DEFINITE INTENTIONAL TIME DELAY AFTER ITS INPUT IS ENERGIZED.
	DE-ENERGIZING	A DEVICE WHICH PRODUCES AN OUTPUT FOLLOWING A DEFINITE INTENTIONAL TIME DELAY AFTER ITS INPUT IS DE-ENERGIZED.
2/3	COINCIDENCE (2 OUT OF 3 SHOWN)	A DEVICE WHICH PRODUCES AN OUTPUT WHEN THE PRESCRIBED NUMBER OF INPUTS EXIST (EXAMPLE 2 INPUTS MUST EXIST FOR AN OUTPUT
M.R. L R	RETENTIVE MEMORY WITH MANUAL RESET	A DEVICE HAVING THE LOGICAL FUNCTION. AS INDICATED BY THE DIAGRAM BELOW:

ACTUATING SIGNAL MANUAL RESET (MOMENTARY)

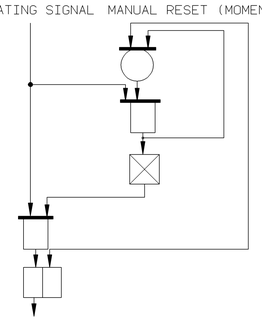

ADDITIONAL SYMBOLS

PIC 143 — INSTRUMENT CHANNEL (SEE E-SPEC G765164 FOR CODE LETTER EXPLANATION)

INDICATES THAT THE DEVICE OR INSTRUMENT CHANNEL HAS A BISTABLE LOGIC OUTPUT WHEN:
- -PARAMETER MEASURED IS GREATER THAN A PRESET VALUE
- -PARAMETER MEASURED IS LESS THAN A PRESET VALUE

OR OR SAME AS ABOVE EXCEPT WITH AN AUTOMATICALLY SET VARIABLE VALUE.

A — ALARM ANNUNCIATOR ALARMS ON THE SAME SHEET WITH THE SAME SUBSCRIPT SHARE A COMMON ANNUNCIATOR WINDOW

R — REACTOR TRIP "FIRST OUT" ANNUNCIATOR

T — TURBINE TRIP "FIRST OUT" ANNUNCIATOR

52/ P17 — DEVICE FUNCTION NUMBER; CONTROL CIRCUIT CHANNEL OR COMPONENT ITEM NUMBER

LOGIC INFORMATION TRANSMISSION

ACTION CALLED FOR BY LOGIC INPUT; COMPONENT CONTROL CIRCUIT

RIC 16 — INDICATES THAT THE INSTRUMENT CHANNEL HAS AN OUTPUT AS FOLLOWS
- P-PROPORTIONAL TO THE PARAMETER MEASURED
- R-PROPORTIONAL TO THE RATE OF CHANGE OF THE PARAMETER MEASURED

BISTABLE DEVICE OR INDICATE SAME AS EXPLAINED ABOVE

T — INDICATOR LAMP
- T TRIP STATUS LIGHTS
- P PERMISSIVE STATUS LIGHTS
- B BYPASS STATUS LIGHTS

POSITION SWITCH DEVELOPMENTS

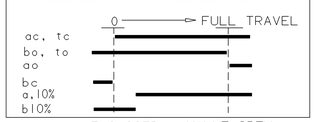

VALVE CLOSED VALVE OPEN

DETAIL "A"

DEVICE FUNCTION NUMBERS AND LETTERS

(Ref: ASA Standard 37.2-1956 and Nema Standard S G 5-1959)

1-MASTER ELEMENT (CONTROL SWITCH)
20-ELECTRIC OPERATED VALVE
27-UNDERVOLTAGE RELAY
33-POSITION SWITCH
SUFFIX LETTER:
ac, ao, bc, bo-LIMIT SWITCH — SEE DETAIL "A"
to, tc — TORQUE SWITCH — FOR OPERATION
43-MANUAL SELECTOR SWITCH

52-AC CIRCUIT BREAKER OR CONTACTOR
SUFFIX LETTER:
a-AUXILIARY CONTACT-OPEN WHEN MAIN CONTACTS ARE OPEN
b-AUXILIARY CONTACT-CLOSED WHEN MAIN CONTACTS ARE OPEN
(C)-REVERSING CONTACTOR OPERATING COIL-ENERGIZE TO CLOSE VALVE
(O)-REVERSING CONTACTOR OPERATING COIL-ENERGISE TO OPEN VALVE
(CC)-BREAKER CLOSING COIL
(TC)-BREAKER TRIP COIL
(UV)-BREAKER UNDER VOLTAGE TRIP COIL
63-LIQUID OR GAS PRESSURE LEVEL, OR FLOW RELAY
69-PERMISSIVE SWITCH
72-DC CIRCUIT BREAKER OR CONTACTOR
SUFFIX LETTER:
a-AUXILIARY CONTACT-OPEN WHEN MAIN CONTACTS ARE OPEN
b-AUXILIARY CONTACT-CLOSED WHEN MAIN CONTACTS ARE OPEN
(C)-REVERSING CONTACTOR OPERATING COIL-ENERGIZE TO CLOSE VALVE
(O)-REVERSING CONTACTOR OPERATING COIL-ENERGIZE TO OPEN VALVE
(CC)-BREAKER CLOSING COIL
(TC)-BREAKER TRIP COIL
(UV)-BREAKER UNDER VOLTAGE TRIP COIL

SUFFIX LETTER
P-PRIMARY
BU-BACK-UP

REFERENCES:

TITLE	SHEET	DRAWING
REACTOR TRIP SIGNALS	2	A225095
TURBINE TRIP SIGNALS	3	A225096
6900V BUS AUTOTRANSFER	4	A225097
NUCLEAR INSTRUMENTATION TRIP SIGNALS	5	A225098
NUCLEAR INSTR. PERMISSIVES & BLOCKS	6	A225099
EMERGENCY GENERATOR STARTING	7	A225100
SAFEGUARDS SEQUENCE	8	A225101
PRESSURIZER TRIP SIGNALS	9	A225102
STEAM GENERATOR TRIP SIGNALS	10	A225103
REACTOR COOLANT SYSTEM TRIP SIGNALS & MANUAL TRIP	11	A225104
03 SAFEGUARDS ACTUATION SIGNALS	12	A225105
FEEDWATER ISOLATION	13	A225106
ROD STOPS & TURBINE LOAD CUTBACK	14	A225107

NOTES:

1. ALL CIRCUITS ON SHEETS 1 THROUGH 14 ARE REDUNDANT EXCEPT WHERE INDICATED OTHERWISE.
2. PROTECTION CHANNELS 1 AND 2 ARE CONNECTED TO INVERTER BUSSES.
3. MANUAL CONTROLS DO NOT HAVE REDUNDANT ACTUATORS, BUT DO HAVE REDUNDANT CONTACTS WHERE LOGIC IS REDUNDANT.
4. THIS DRAWING SUPERCEDES WESTINGHOUSE DRAWING 882B627 SHEET 1, MICROFILM 190B75.

THIS DRAWING CONTAINS ITEMS WHICH MUST BE CONTROLLED WITHIN CON EDISON AS "CLASS A" ITEMS PER CI-240-1

COMPUTER GENERATED DRAWING NOT TO BE HAND REVISED

REVISION							
	TGW 7/12/99	THIS REVISION IS NON-CLASS PER CI-240-1 UPDATED DWG. TO SHOW CRS 199904915 RELEASED FOR RECORD P/N 69982-CD DT 7/12/99		JOHN J LOWNEY		GERARD L. BLENKLE	
	DES						
	ENG						
			DATE	CKR.	SUPV.	DESIGN ENG	DESC. ENG.	ENG. MGR.
				REVIEW		APPROVALS	

TITLE: LOGIC DIAGRAMS
INDEX & SYMBOLS
(SHEET 1)
- UFSAR FIGURE No. 7.2-1

DRWN. BY — SCALE NTS — REC'D

Con Edison — STATION: INDIAN PT. #2

DWG. NO. A225094-03 — DB

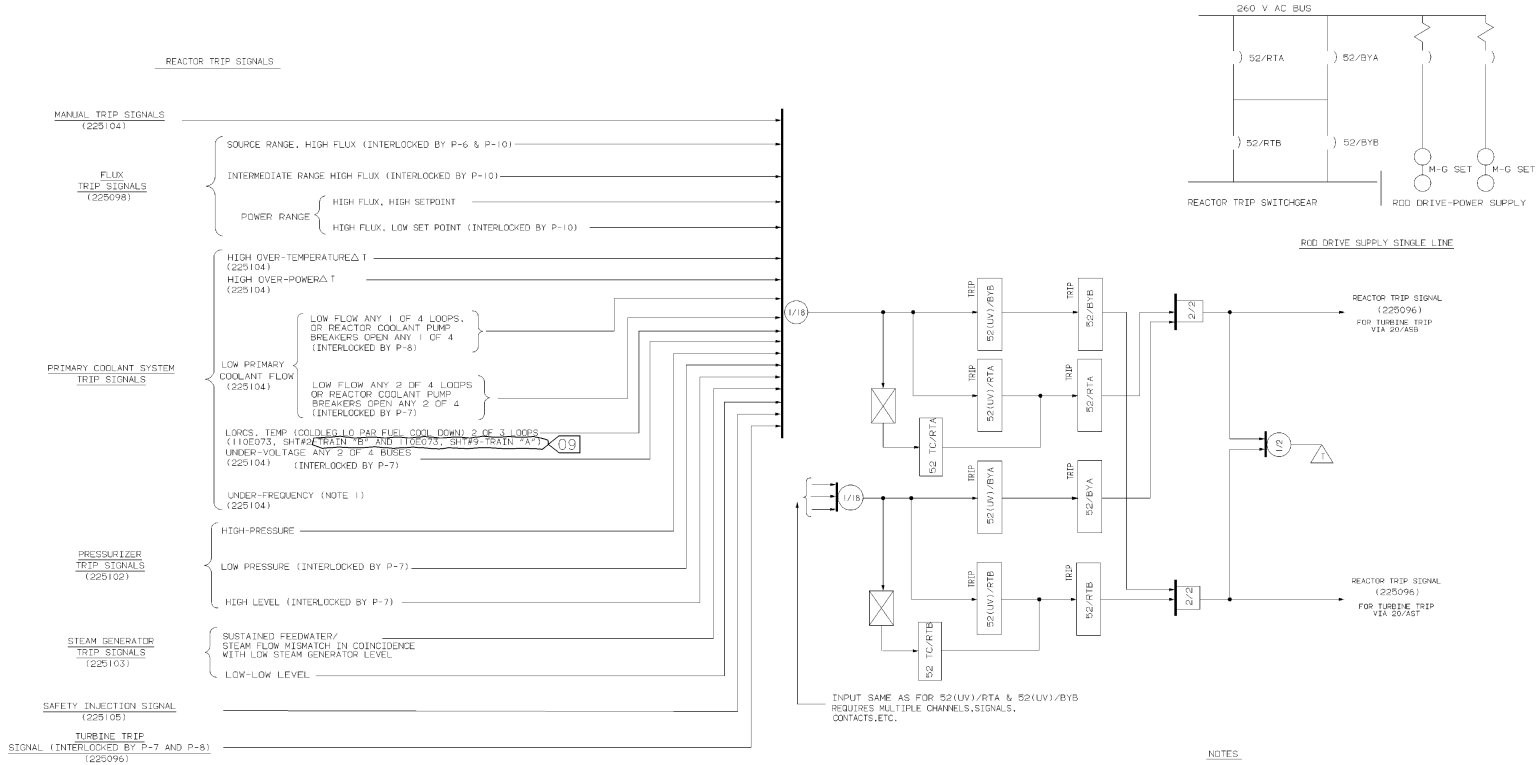

ROD DRIVE SUPPLY SINGLE LINE

NOTES

1- UNDER-FREQUENCY ON ANY 2 OF 4 BUSES WILL OPEN THE BREAKERS OF ALL REACTOR COOLANT PUMPS AND CONSEQUENTLY CAUSE REACTOR TRIP.

2- FOR SYMBOLS AND REFERENCES SEE A225094.

3- THIS DRAWING SUPERSEDES WESTINGHOUSE DRAWING #8820627 SHEET 2. MICROFILM 190876.

4- FOR SCHEMATIC DWGS OF REACTOR PROT RACKS (E2 THRU E6 & F2 THRU F6) SEE WH/SE DWG 110E073.SHTS 1 THRU 11

THIS DRAWING CONTAINS ITEMS WHICH MUST BE CONTROLLED WITHIN CON EDISON AS:
" CLASS A" ITEMS
PER CI-240-1

COMPUTER GENERATED DRAWING NOT TO BE HAND REVISED

09	VJ/JOHN 5/30/03	THIS REVISION IS NON-CLASS AS PER THE QAPD UPDATED DWG. PER CRS 200103361	JOHN J LOWNEY	GERARD L BLENKLE	TITLE: LOGIC DIAGRAMS REACTOR TRIP SIGNALS (SHEET 2)	STATION: INDIAN POINT #2
08		RELEASED FOR RECORD P/N 69981-AF VJ/TD			- UFSAR FIGURE No. 7.2-2	DWG. NO.: A225095-09 DB

DATE | CHK. | SUPV. | DESIGN ENG | DISC. ENG. | ENG. MGR. | DRAWN BY: REPRO | SCALE: NONE | REV'D

REVIEW | APPROVALS

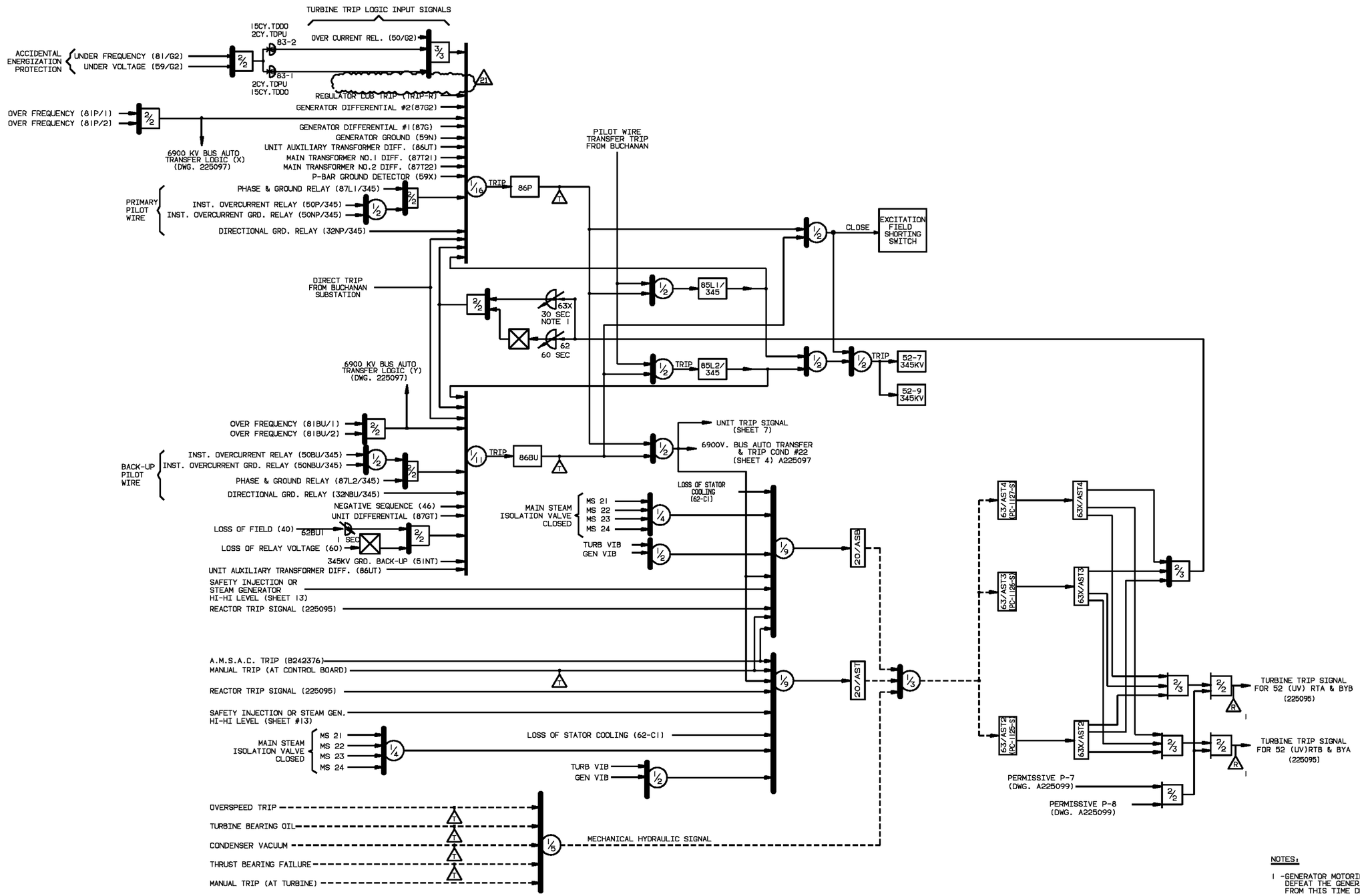

NOTES:

1 -GENERATOR MOTORING PROTECTION SHOULD NOT DEFEAT THE GENERATOR MOTORING RESULTING FROM THIS TIME DELAY.

2 -FOR SYMBOLS AND REFERENCES SEE A225094.

3 -THIS DRAWING SUPERCEDES WESTINGHOUSE DWG. 882D627, SHEET #3, MICROFILM 190B77.

COMPUTER GENERATED DRAWING NOT TO BE HAND REVISED

REV	DESCRIPTION	DATE	BY	APPROVAL ENGINEERING ON FILE	APPR.
21	INCORPORATED EC-22634	06/02/10	DM		

TITLE: LOGIC DIGRAMS
TURBINE TRIP SIGNALS
(SHEET #3)
- UFSAR FIGURE No. 7.2-3

Entergy Nuclear Northeast

STATION: INDIAN POINT #2

DRAWN BY: K.FOLEY | SCALE: NONE | REC'D

DWG. NO. A225096-21 | DB

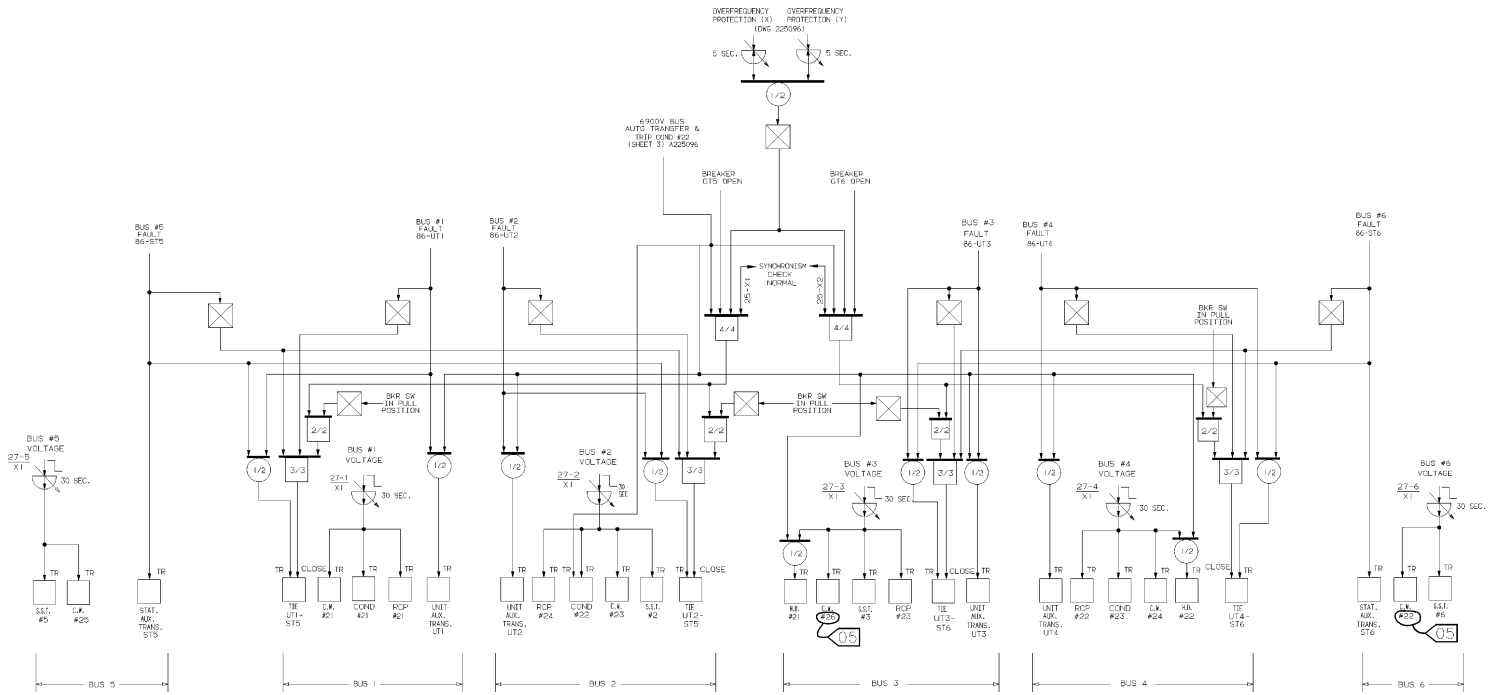

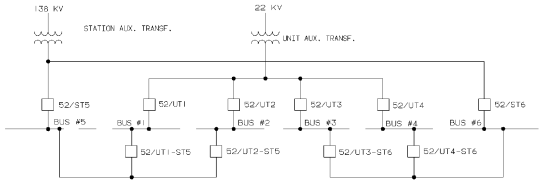

PARTIAL 6900V ONE LINE

NOTES:

1 -FOR SYMBOLS AND REFERENCES SEE A225094.
2 -THIS SUPERCEDES WESTINGHOUSE DWG. 882D627, SHEET #4, MICROFILM 190878.

THIS DRAWING CONTAINS ITEMS WHICH MUST BE CONTROLLED WITHIN CON EDISON AS

"CLASS A" ITEMS
PER CI-240-1

COMPUTER GENERATED DRAWING NOT TO BE HAND REVISED

REVISIONS								
ZONE	REV	DESCRIPTION	DATE	DWN.	SUPV.	DESIGN ENG.	DISC. ENG.	ENG. MGR.
	DES	THIS REVISION IS NON-CLASS PER CI-240-1 UPDATED DWG. PER CRS #1999-05005 ISSUED FOR RECORD P/N 69982-CD			JOHN J LOWNEY		GERARD L BLENKLE	
	W.E. 05/10/00							
	ENG	WD/TM 05/10/00 RCMT		REVIEW		APPROVALS		

TITLE: LOGIC DIAGRAM 6900V
BUS AUTO TRANSFER
(SHEET #4)
- UFSAR FIGURE No. 7.2-4

DRAWN BY | SCALE: NONE | REC'D

STATION: INDIAN POINT #2

DWG. NO. A225097-05 DB

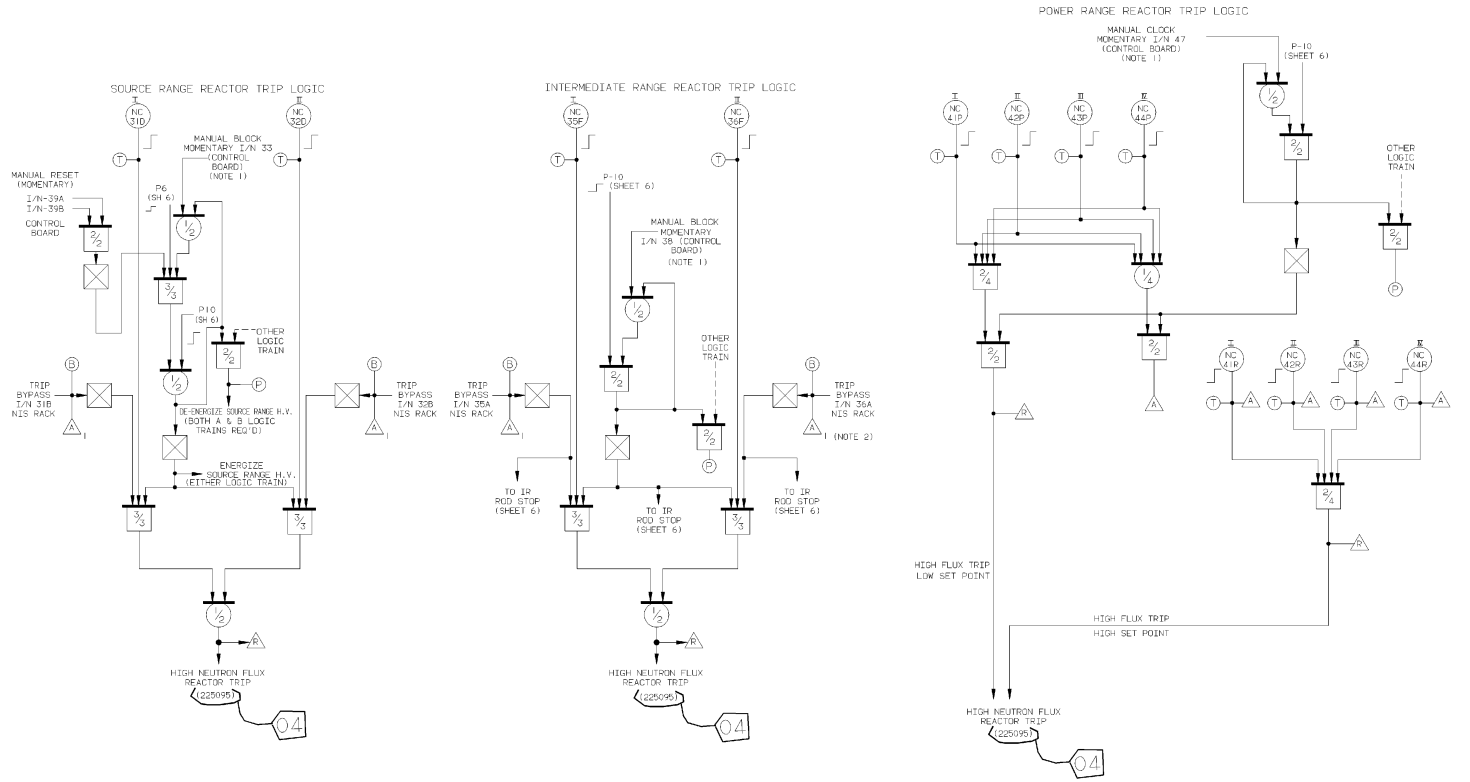

NOTES:

1 - I/N 33A → LOGIC TRAIN A
I/N 33B → LOGIC TRAIN B
I/N 38A → LOGIC TRAIN A
I/N 38B → LOGIC TRAIN B
I/N 47A → LOGIC TRAIN A
I/N 47B → LOGIC TRAIN B

2 - A 1 SAME WINDOW AS ALARM 1 ON SHEET 6

3 - FOR SYMBOLS AND REFERENCES SEE A225094.

4 - THIS DRAWING SUPERCEDES WESTINGHOUSE DWG. 882D627, SHEET #5, MICROFILM 208875.

THIS DRAWING CONTAINS ITEMS WHICH MUST BE CONTROLLED WITHIN CON EDISON AS

"CLASS A" ITEMS
PER CI-240-1

COMPUTER GENERATED DRAWING NOT TO BE HAND REVISED

REVISION	DATE	DWG	
	PM01	3/11/99	THIS REV. IS NON-CLASS AS PER CI-240-1 UPDATED DWG PER CR319990224 & CR319990752 PKG D-2412 RELEASED FOR RECORD P/N 69911-NP SP

CHR.	SURV.	JOHN J LOWNEY	GERARD L BLENKLE
DESIGN ENG		DISC. ENG.	ENG. MGR.
REVIEW		APPROVALS	

TITLE: LOGIC DIAGRAM NUCLEAR INSTRUMENTATION TRIP SIGNALS (SHEET #5)
- UFSAR FIGURE No. 7.2-5

DRAWN BY: | SCALE: NONE | REC'D

Con Edison

STATION: INDIAN POINT #2

DWG. NO.: A225098-04 DB

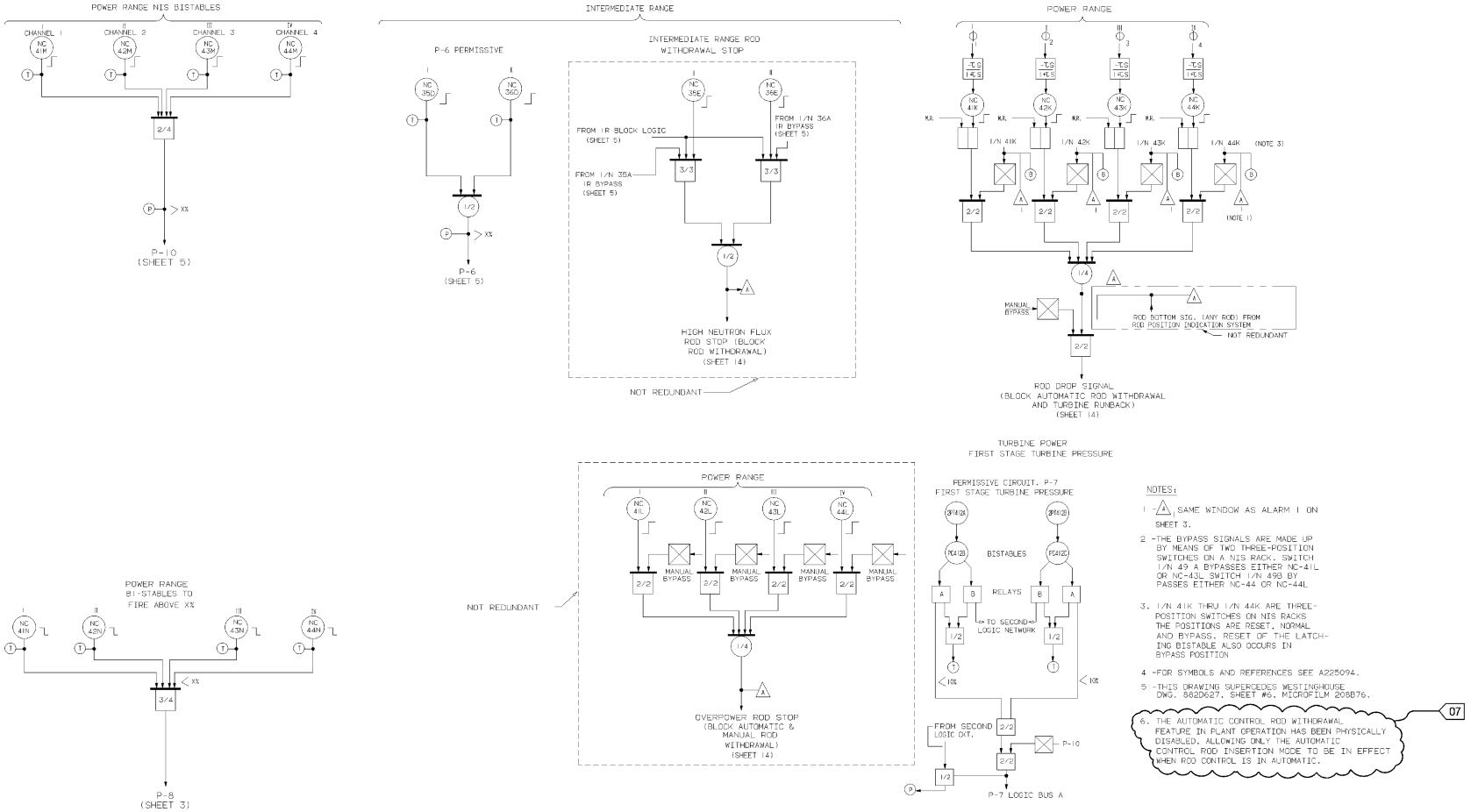

NOTES:

1 - A SAME WINDOW AS ALARM 1 ON SHEET 3.

2 -THE BYPASS SIGNALS ARE MADE UP BY MEANS OF TWO THREE-POSITION SWITCHES ON A NIS RACK. SWITCH I/N 49 A BYPASSES EITHER NC-41L OR NC-43L SWITCH I/N 49B BY PASSES EITHER NC-44 OR NC-44L

3. I/N 41K THRU I/N 44K ARE THREE-POSITION SWITCHES ON NIS RACKS THE POSITIONS ARE RESET, NORMAL AND BYPASS. RESET OF THE LATCHING BISTABLE ALSO OCCURS IN BYPASS POSITION

4 -FOR SYMBOLS AND REFERENCES SEE A225094.

5 -THIS DRAWING SUPERCEDES WESTINGHOUSE DWG. 882D627, SHEET #6, MICROFILM 208B76.

6. THE AUTOMATIC CONTROL ROD WITHDRAWAL FEATURE IN PLANT OPERATION HAS BEEN PHYSICALLY DISABLED. ALLOWING ONLY THE AUTOMATIC CONTROL ROD INSERTION MODE TO BE IN EFFECT WHEN ROD CONTROL IS IN AUTOMATIC. 07

THIS DRAWING CONTAINS ITEMS WHICH MUST BE CONTROLLED WITHIN CON EDISON AS

"CLASS A" ITEMS
PER CI-240-1

COMPUTER GENERATED DRAWING NOT TO BE HAND REVISED

REVISION						
CH 12-19-01 DFB	THIS REVISION IS CLASS "A" PER THE QAPD. REVISED DRAWING PER CR# 200108050 RELEASED FOR RECORD P/N 69901-AF 12-18-01 CH		JOHN J. LOWNEY		GERARD L. BLENALE	TITLE: LOGIC DIAGRAMS NUCLEAR INSTR. PERMISSIVES & BLOCKS (SHEET 6) — UFSAR FIGURE No. 7.2-6
CH 12-19-01 DFB		DATE	CHK.	SUPV.	DESIGN ENG.	DISC. ENG. / ENG. MGR.
		REVIEW			APPROVALS	

DRAWN BY: | SCALE: NONE | REV: 0

Con Edison — STATION: INDIAN POINT #2

DWG. NO. A225099-07 DB

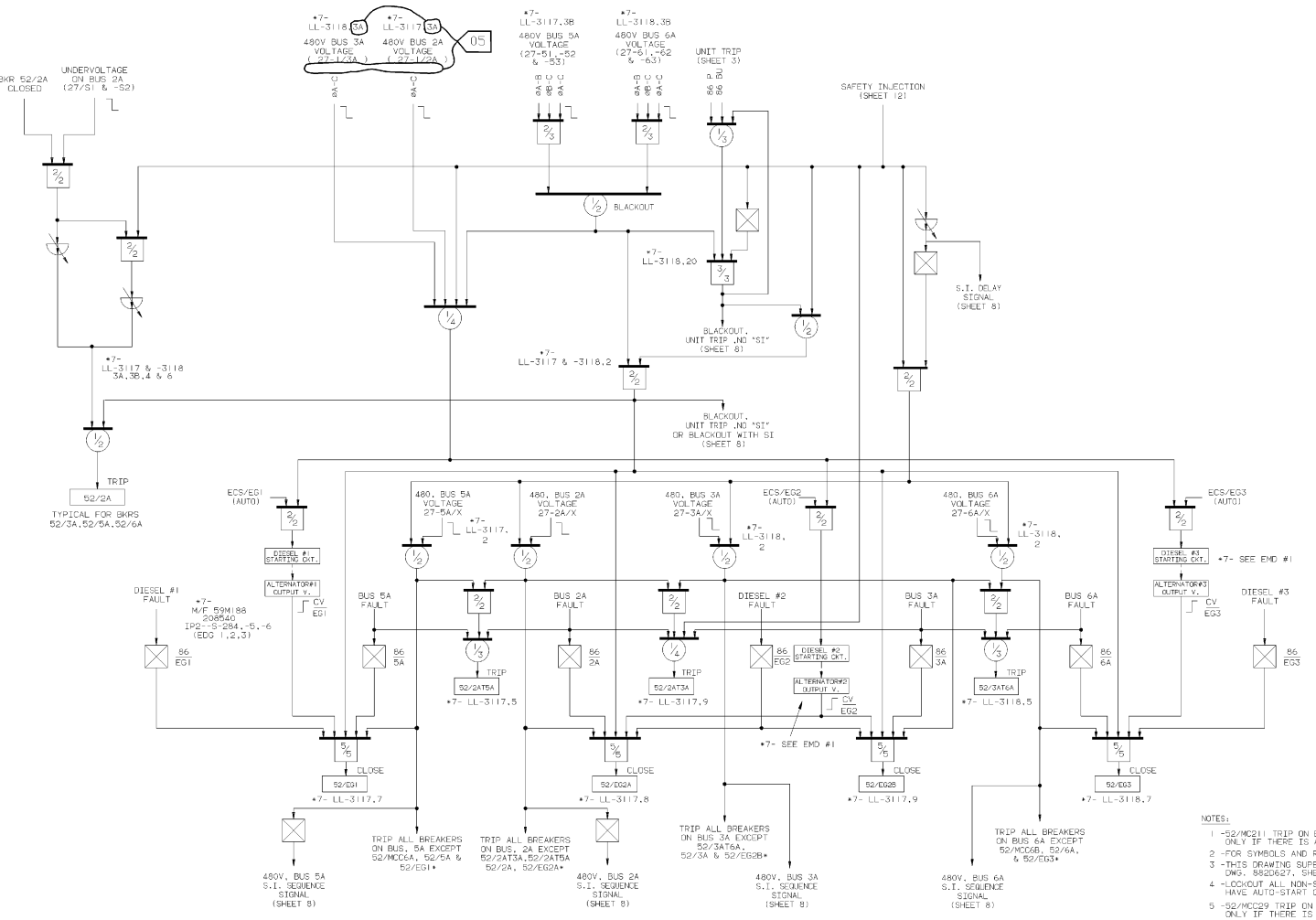

NOTES:

1 -52/MC211 TRIP ON BUS 3A UNDERVOLTAGE ONLY IF THERE IS A LOSS OF OUTSIDE POWER.
2 -FOR SYMBOLS AND REFERENCES SEE A225094.
3 -THIS DRAWING SUPERCEDES WESTINGHOUSE DWG. 8820627, SHEET #7, MICROFILM 205B92.
4 -LOCKOUT ALL NON-SAFEGUARDS BREAKERS WHICH HAVE AUTO-START CIRCUIT.
5 -52/MCC29 TRIP ON BUS 5A UNDERVOLTAGE ONLY IF THERE IS A LOSS OF OUTSIDE POWER.
6 -52/MCC24 TRIP BUS 2A UNDERVOLTAGE ONLY IF THERE IS A LOSS OF OUTSIDE POWER.

*7 -NUMBERS PREFIXED WITH THIS REFERS TO THE APPLICABLE SCHEMATIC DIAGRAM
A) EG. IP2--S-200 MEANS IP2--S-000200
B) EG. LL-3117.25 MEANS 9321-LL-3117.SHEET 2

THIS DRAWING CONTAINS ITEMS WHICH MUST BE CONTROLLED WITHIN CON EDISON AS
"CLASS A" ITEMS
PER CI-240-1

COMPUTER GENERATED DRAWING NOT TO BE HAND REVISED

REVISION						
N.J. 02/20/03	THIS REVISION IS NON-CLASS PER CI-240-1 UPDATED DWG. AS PER CRS 199909374 RELEASED FOR RECORD P/N 89982-CM SR/VJ/DJM	JOHN J LOWNEY	GERARD L BLENKLE	TITLE: LOGIC DIAGRAM EMERGENCY GENERATOR STARTING (SHEET #7) – UFSAR FIGURE No. 7.2-7	STATION: INDIAN POINT #2	
ENG	DATE / DR. / SUPV.	DESIGN ENG. / DISC. ENG.	ENG. MGR.	DRAN. BY / SCALE NONE / REC'D	DWG. A225100-05	DB
	REVIEW	APPROVALS				

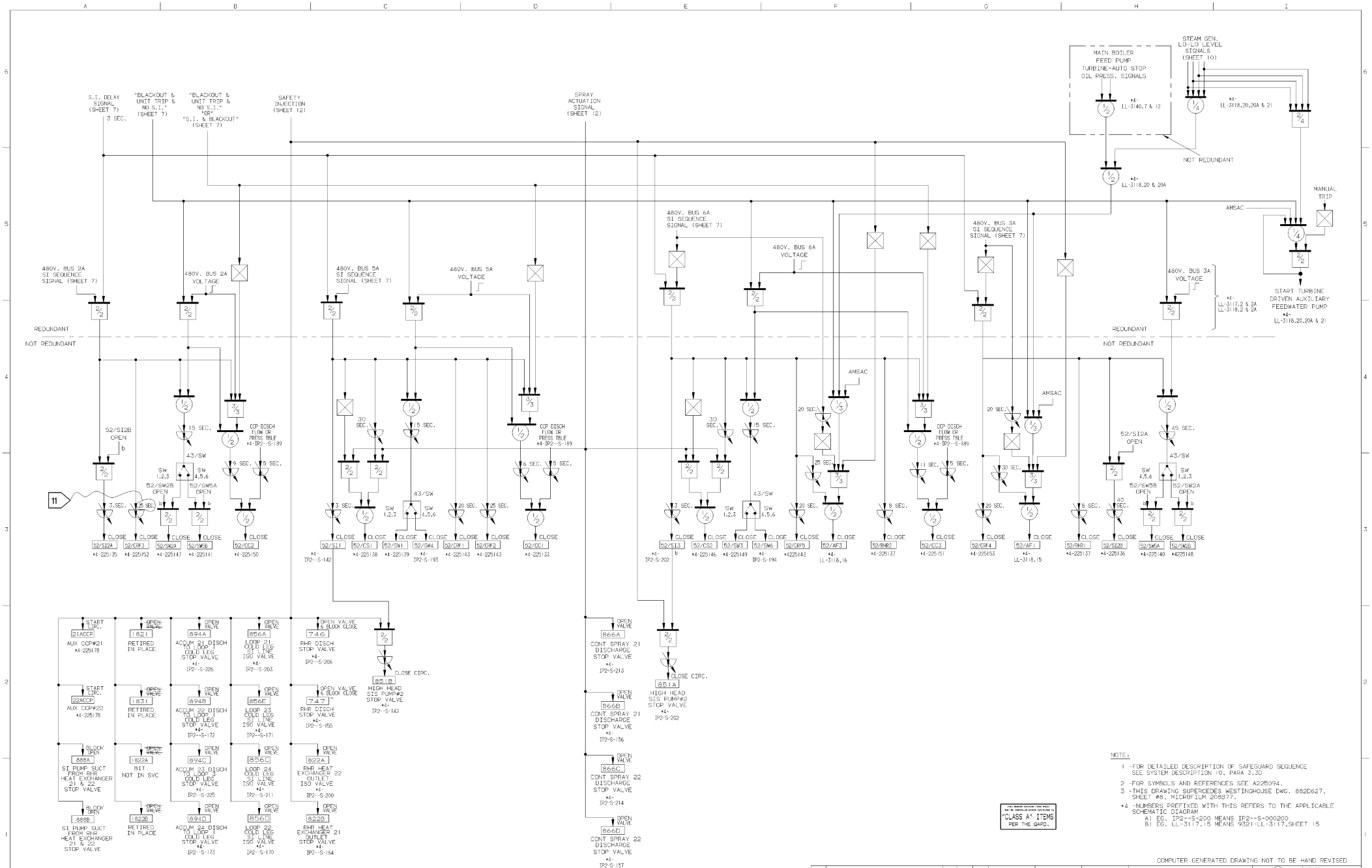

NOTE:

1 -FOR DETAILED DESCRIPTION OF SAFEGUARD SEQUENCE SEE SYSTEM DESCRIPTION 10, PARA 3.3D

2 -FOR SYMBOLS AND REFERENCES SEE A225094.

3 -THIS DRAWING SUPERCEDES WESTINGHOUSE DWG. 882D627, SHEET #8, MICROFILM 208977.

*4 -NUMBERS PREFIXED WITH THIS REFERS TO THE APPLICABLE SCHEMATIC DIAGRAM
A) EG. IP2--S-200 MEANS IP2--S-000200
B) EG. LL-3117.15 MEANS 9321-LL-3117,SHEET 15

COMPUTER GENERATED DRAWING NOT TO BE HAND REVISED

11	THIS REV. IS NON CLASS AS PER THE QAPD. UPDATED DWG. AS PER ORS 200109410. ISSUED FOR RECORD P.N. 89901-AF	JOHN J LOWNEY	GERARD L BLENKLE	TITLE: LOGIC DIAGRAMS SAFEGUARDS SEQUENCE (SHEET #8)	Con Edison	STATION: INDIAN POINT #2
M. ENTEMBERG 10/22/01	ET/MPH 10/22/01	DESIGN ENG. / DISC. ENG. / ENG. MGR.		– UFSAR FIGURE No. 7.2-8		
	DATE / CHK. / SUPV.	REVIEW	APPROVALS	DRAWN BY: K.FOLEY / SCALE: NONE / REV: 0	DWG. NO.: A225 01-11	DB

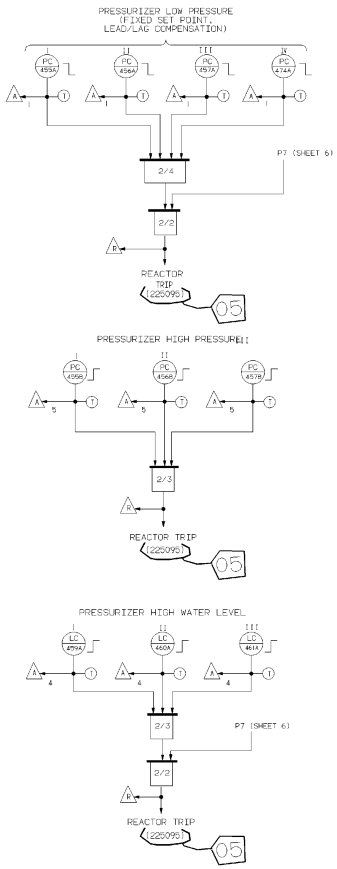

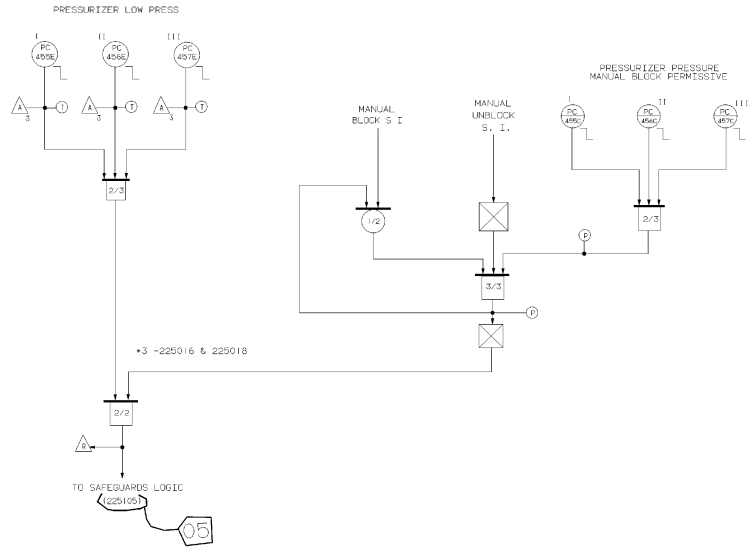

NOTES:

1 -FOR SYMBOLS AND REFERENCES SEE A225094.
2 -THIS DRAWING SUPERCEDES WESTINGHOUSE DWG. 882D627, SHEET #9, MICROFILM 205B94.
*3 -NUMBERS PREFIXED WITH THIS REFERS TO THE APPLICABLE SCHEMATIC DIAGRAM

THIS DRAWING CONTAINS ITEMS WHICH MUST BE CONTROLLED WITHIN CON EDISON AS

"CLASS A" ITEMS
PER CI-240-1

COMPUTER GENERATED DRAWING NOT TO BE HAND REVISED

REVISION	DATE	DESCRIPTION	APPROVALS
DWG.	PMD 5/11/99	THIS REV IS NON-CLASS AS PER CI-240-1 UPDATED DWG PER CRS199901224 & CRS199903752 PKG D-2412 RELEASED FOR RECORD P/N 6991-NP SP	DRF. JOHN J LOWNEY; DESIGN ENG; DISC. ENG.; ENG. MGR. GERARD L BLENKLE; REVIEW

TITLE: LOGIC DIAGRAMS
PRESSURIZER TRIP SIGNALS
(SHEET #9)
- UFSAR FIGURE No. 7.2-9

DRAWN BY: | SCALE: NONE | REC'D

Con Edison

STATION: INDIAN POINT #2

DWG. NO.: A225102-05 DH

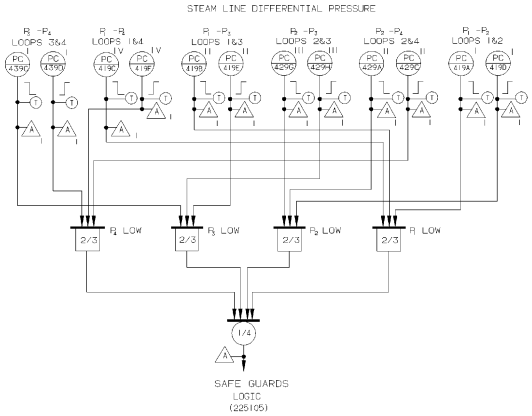

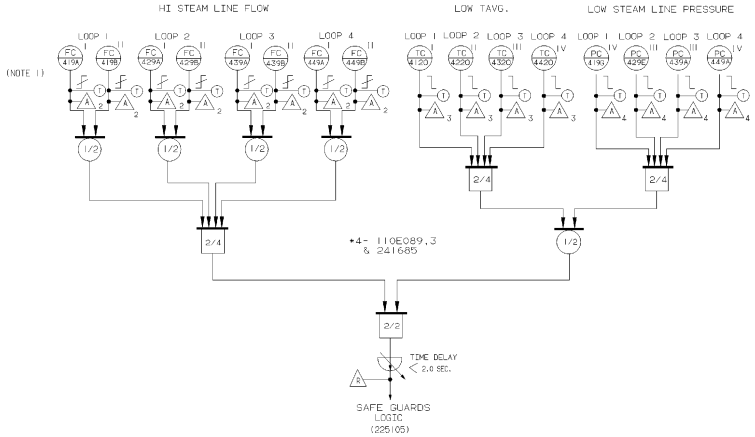

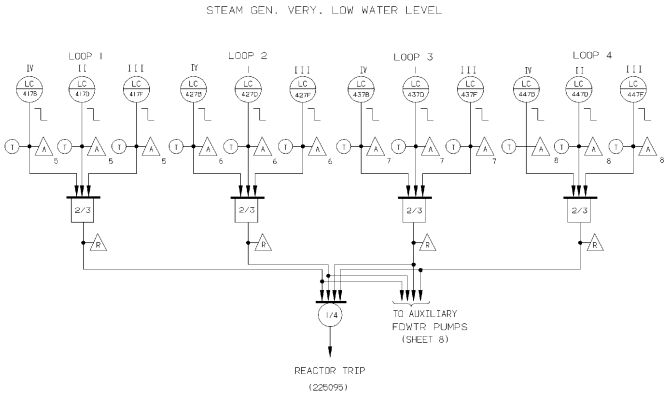

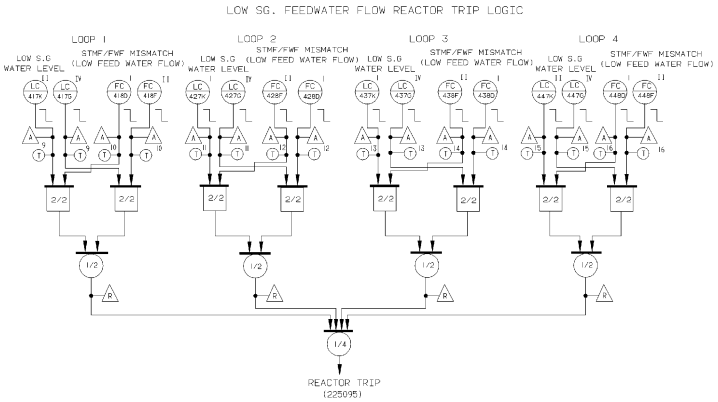

NOTES:

1 -SETPOINTS OF STEAM FLOW BISTABLES ARE ADJUSTABLE AND SET BY TURBINE FIRST STAGE PRESSURE.

2 -FOR SYMBOLS AND REFERENCES SEE A225094.

3 -THIS DRAWING SUPERCEDES WESTINGHOUSE DWG. 882D627, SHEET #10, MICROFILM 205B95.

*4 -NUMBERS PREFIXED WITH THIS REFERS TO THE APPLICABLE SCHEMATIC DIAGRAM

A) EG. 110E089.2 REFERS TO THE WH'SE SWD.SHEET #3

THIS DRAWING CONTAINS ITEMS WHICH MUST BE CONTROLLED WITHIN CON EDISON AS

"CLASS A" ITEMS PER CI-240-1

08

COMPUTER GENERATED DRAWING NOT TO BE HAND REVISED

REVISION								
ENG.	TGW 7/12/99	THIS REV IS NON-CLASS AS PER CI-240-1 UPDATED DWG PER CRS-199904906 RELEASED FOR RECORD P/N 69982-CD DT/TY	DATE	DWN.	SUPV.	DESIGN ENG.	DISC. ENG.	ENG. MGR.
					JOHN J LONNEY		GERARD BLENKLE	
			REVIEW			APPROVALS		

TITLE: LOGIC DIAGRAM STEAM GENERATOR TRIP SIGNALS (SHEET #10)

- UFSAR FIGURE No. 7.2-10

DWN. BY | SCALE: NONE | REC'D

STATION: INDIAN POINT #2

DWG. NO.: A225103-08 DB

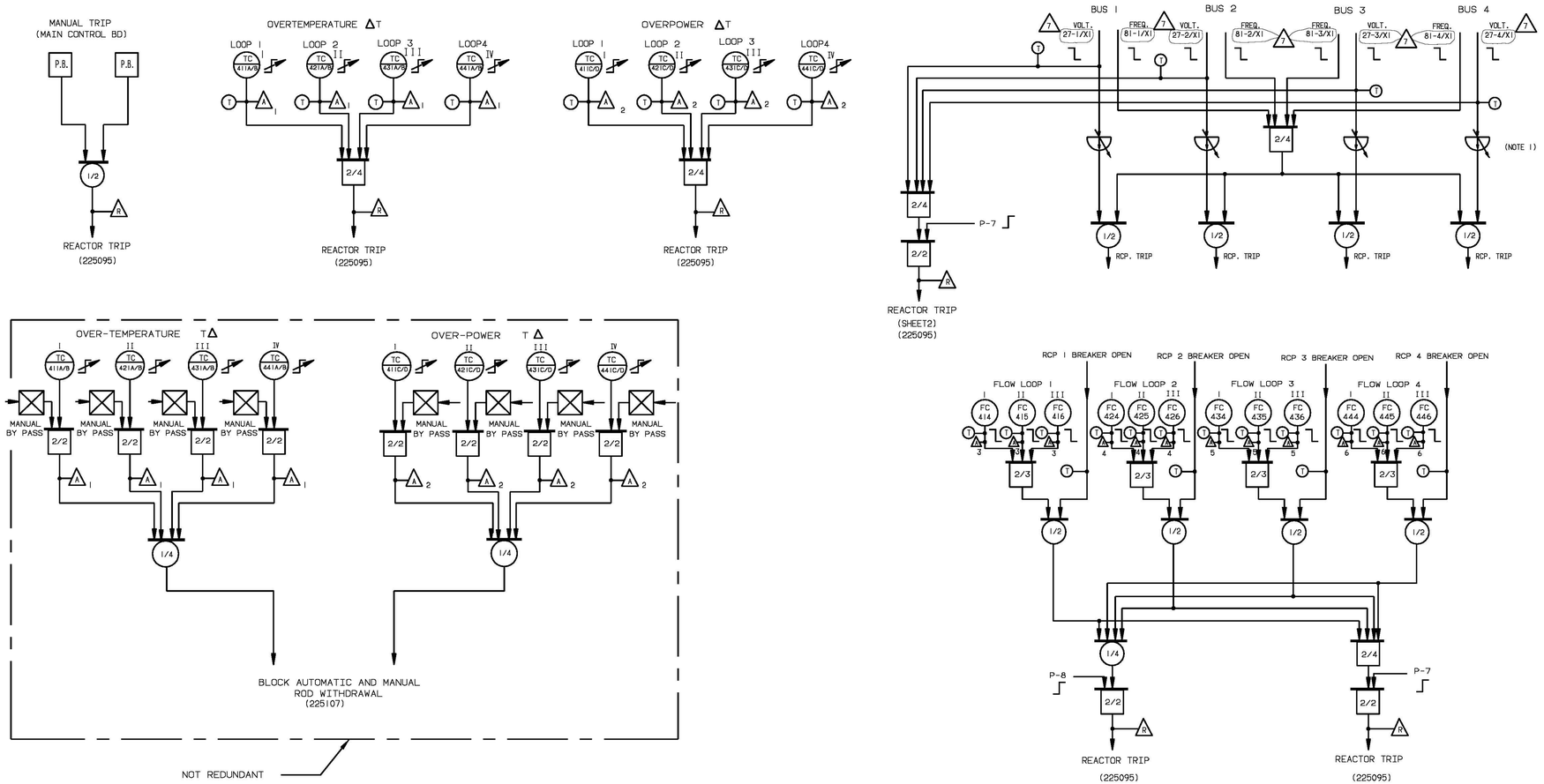

NOTES:

1 -CIRCUITRY FOR RCP TRIP ON UNDERVOLTAGE PERTAINS TO BUS-CLEARING, IS NOT PART OF REACTOR PROTECTION SYSTEM, AND ITS NOT REDUNDANT.

2 -FOR SYMBOLS AND REFERENCES SEE A225094.

3 -THIS DRAWING SUPERCEDES WESTINGHOUSE DWG. 8820627, SHEET #10, MICROFILM 207897.

4 -FOR REACTOR PROTECTION SCHEMATIC SEE WHSE 110E073

5 -THE AUTOMATIC CONTROL ROD WITHDRAWAL FEATURE IN PLANT OPERATION HAS BEEN PHYSICALLY DISABLED, ALLOWING ONLY THE AUTOMATIC CONTROL ROD INSERTION MODE TO BE IN EFFECT WHEN ROD CONTROL IS IN AUTOMATIC.

THIS DRAWING CONTAINS ITEMS WHICH MUST BE CONTROLED WITHIN CON EDISON AS
"CLASS A" ITEMS
PER CI-240-1

REV	DESCRIPTION	DATE	BY	CHK'D	APP.
7	INCORPORATED EC 8954	07/24/08	SM	APPROVAL SIGNATURES ON FILE	

REVISIONS

INDIAN POINT ENERGY CENTER - UNIT 2

LOGIC DIAGRAM
PRIMARY COOLANT SYSTEM TRIP
SIGNALS & MANUAL TRIP
(SHEET #11)

Entergy
Nuclear Northeast

DWG NO. A225104 REV 7

SCALE SHEET

UFSAR FIGURE No. 7.2-11

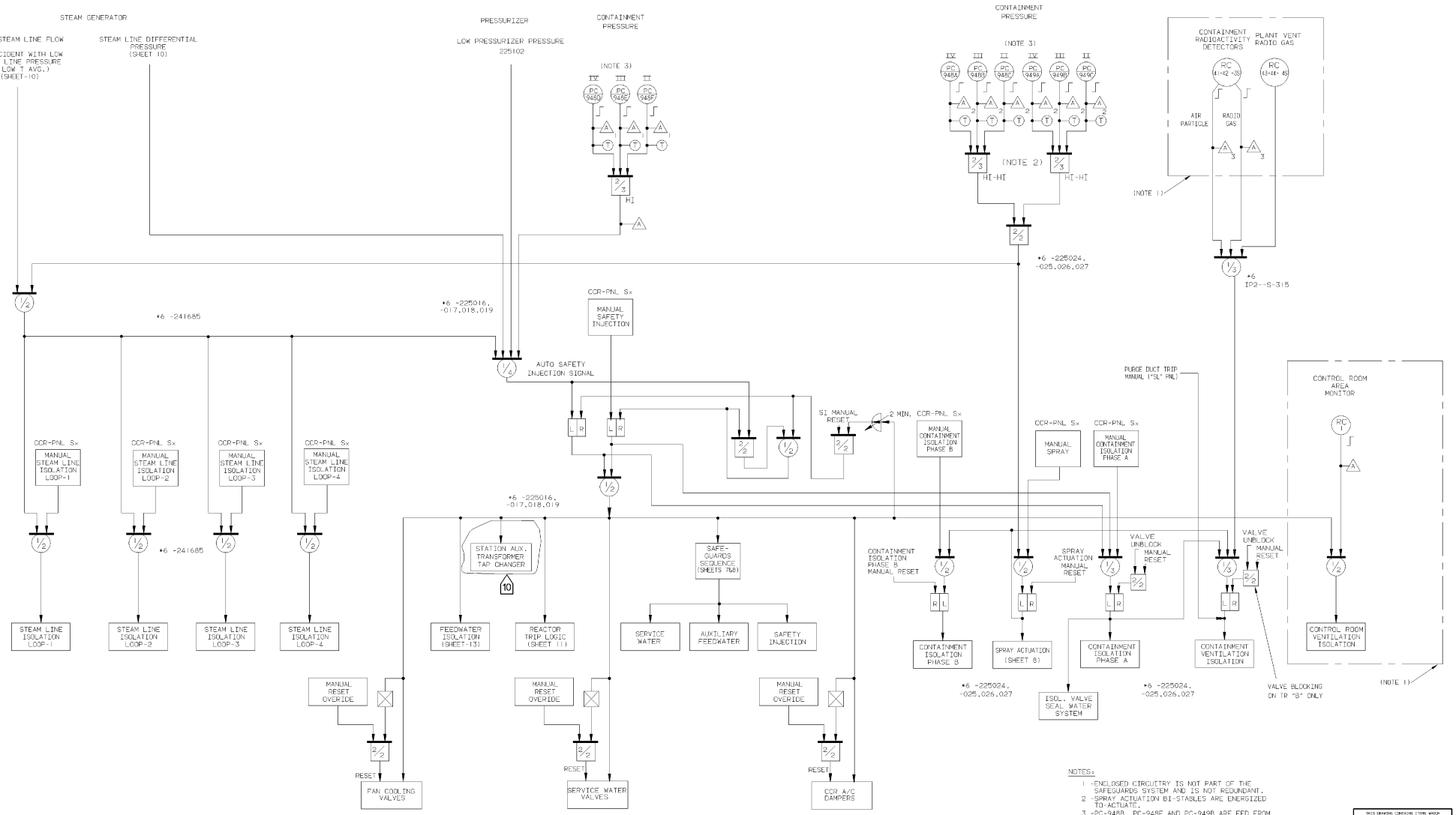

NOTES:

1 -ENCLOSED CIRCUITRY IS NOT PART OF THE SAFEGUARDS SYSTEM AND IS NOT REDUNDANT.
2 -SPRAY ACTUATION BI-STABLES ARE ENERGIZED TO ACTUATE.
3 -PC-948B, PC-948E AND PC-949B ARE FED FROM A SEPARATE INVERTER POWER SUPPLY.
4 -FOR SYMBOLS AND REFERENCES SEE A225094.
5 -THIS DRAWING SUPERCEDES WESTINGHOUSE DWG. 8820627, SHEET #10, MICROFILM 205896.

*6 -NUMBERS PREFIXED WITH THIS REFERS TO THE APPLICABLE SCHEMATIC DIAGRAM
A) EG. IP2--S-200 MEANS IP2--S-000200
B) EG. LL-3117.15 MEANS 9321-LL-3117.SHEET 15

THIS DRAWING CONTAINS ITEMS WHICH MUST BE CONTROLLED WITHIN QA DESIGN AS
"CLASS A" ITEMS PER CI-240-1

COMPUTER GENERATED DRAWING NOT TO BE HAND REVISED

REVISION	ENG		
		THIS REVISION IS NON-CLASS AS PER THE QAPD. UPDATED DRAWING PER MOD.PROC. DCP-02-2-005. DMD225105-AB-01 ISSUED AS CONSTRUCTED. P.N. 2-005-02 MPN	

DATE	DR.	SUPV.	DESIGN ENG	DISC. ENG.	ENG. MGR.
		JOHN J LOMNEY		GERARD BLENKLE	
REVIEW			APPROVALS		

TITLE: LOGIC DIAGRAM
SAFEGUARDS ACTUATION SIGNALS
(SHEET #12)
– UFSAR FIGURE No. 7.2-12

DRAWN BY | SCALE: NONE | REC'D

STATION: INDIAN POINT #2

DWG. NO.: A225105-10 DB

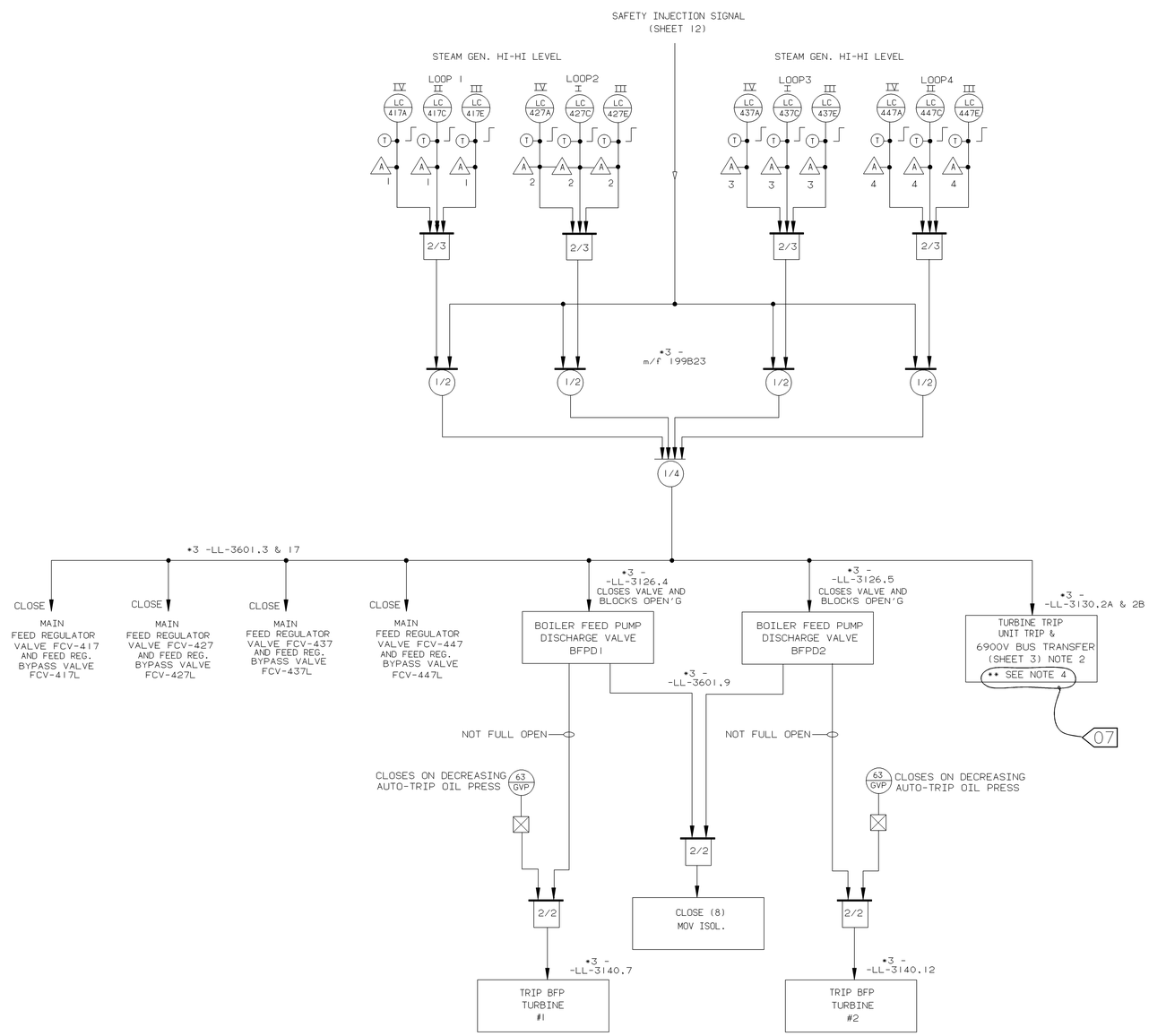

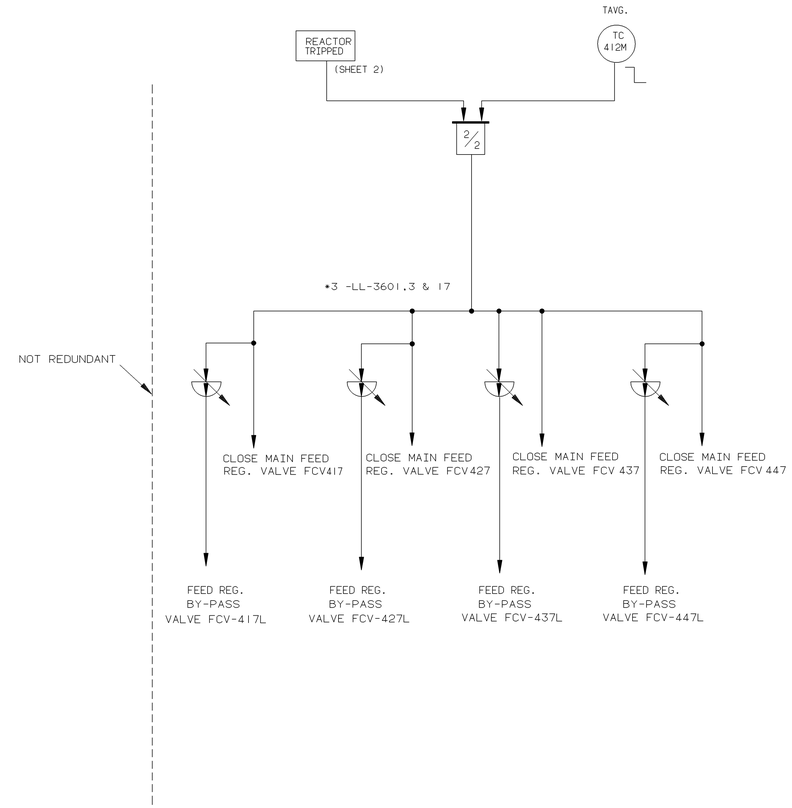

THIS DRAWING CONTAINS ITEMS WHICH MUST BE CONTROLLED WITHIN ENTERGY AS:
" CLASS A" ITEMS
PER THE QAPD

07

NOTES:

1 -FOR SYMBOLS AND REFERENCES SEE A225094.
2 -THIS DRAWING SUPERCEDES WESTINGHOUSE DWG. 882D627, SHEET #10, MICROFILM 205B97.
*3 -NUMBERS PREFIXED WITH THIS REFERS TO THE APPLICABLE SCHEMATIC DIAGRAM
A) EG. m/f REFERS TO MICROFILM NUMBER
B) EG. LL-3117.15 MEANS 9321-LL-3117.SHEET 15
**4 -UNIT TRIP AND 6900V BUS TRANSFER ACTUATION DELAYED 30 SECONDS AFTER TURBINE TRIP

COMPUTER GENERATED DRAWING NOT TO BE HAND REVISED

REVISION	DES.	ENG.	
	R.L. 05/03/04		THIS REVISION IS NON-CLASS PER THE QAPD. UPDATED DWG. PER ER# IP2-04-18787 (CR-IP2-2004-00455). RELEASED FOR RECORD P/N 69901-AF AI./R.L.

DATE	CKR.	SUPV.	DESIGN ENG	DISC. ENG.	ENG. MGR.
			JOHN J LOWNEY		GERARD BLENKLE
	REVIEW		APPROVALS		

TITLE: LOGIC DIAGRAMS FEEDWATER ISOLATION. (SHEET #13)
– UFSAR FIGURE No. 7.2-13

DRWN. BY | SCALE: NONE | REC'D

Con Edison

STATION: INDIAN POINT #2

DWG. NO. A225106-07 DB

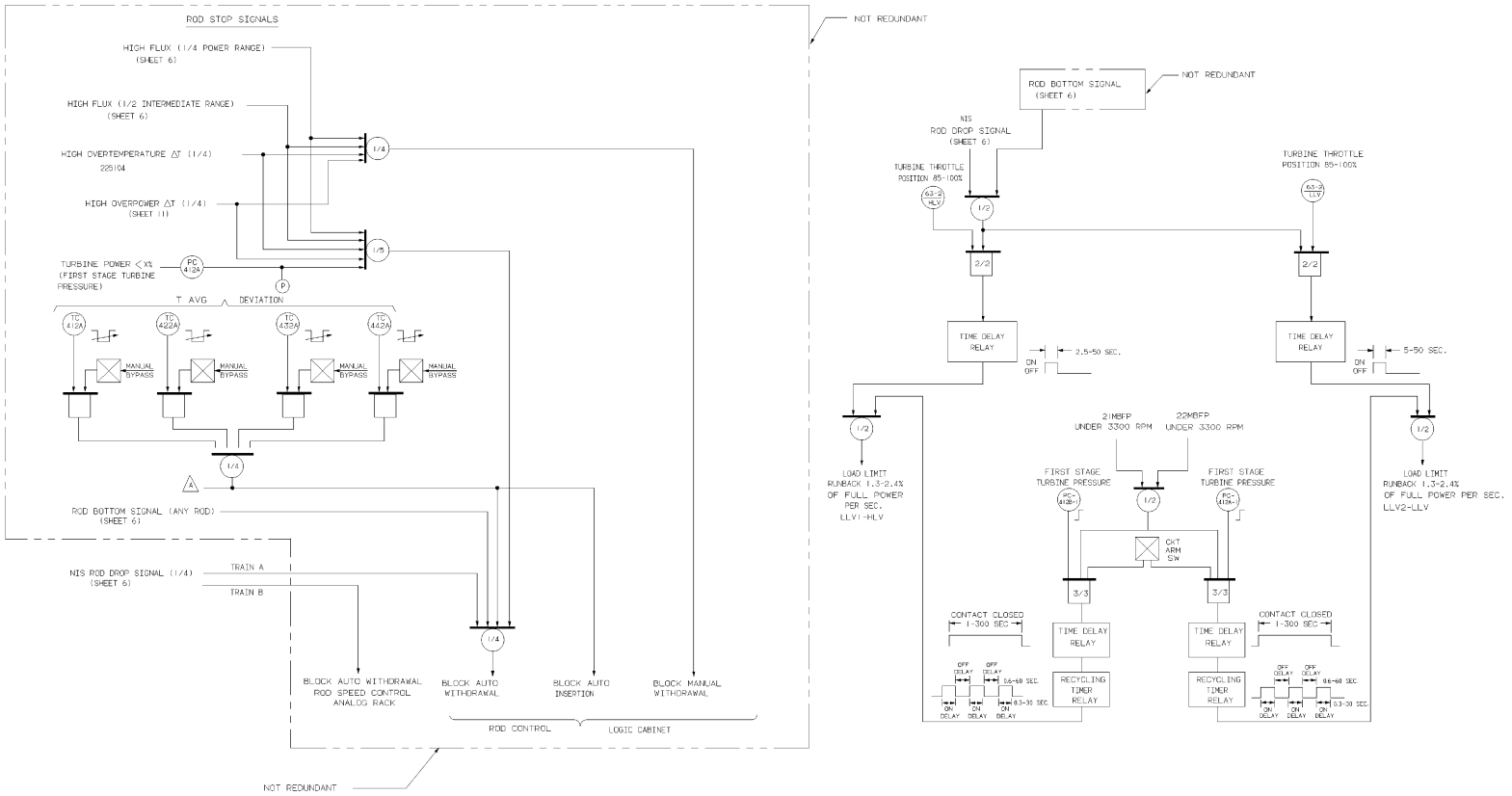

THIS DRAWING CONTAINS ITEMS WHICH MUST BE CONTROLLED WITHIN CON EDISON AS

"CLASS A" ITEMS PER CI-240-1

NOTES:

1 -FOR SYMBOLS AND REFERENCES SEE A225094.
2 -THIS DRAWING SUPERCEDES WESTINGHOUSE DWG. 8820637, SHEET #10, MICROFILM 205898.
3-THE AUTOMATIC CONTROL ROD WITHDRAWAL FEATURE IN PLANT OPERATION HAS BEEN PHYSICALLY DISABLED, ALLOWING ONLY THE AUTOMATIC CONTROL ROD INSERTION MODE TO BE IN EFFECT WHEN ROD CONTROL IS IN AUTOMATIC. 09

COMPUTER GENERATED DRAWING NOT TO BE HAND REVISED

REVISION			DATE	DR.	SUPV.	DESIGN ENG.	DISC. ENG.	ENG. MGR.	TITLE: LOGIC DIAGRAM ROD STOPS & TURBINE LOADS CUTBACK (SHEET #14)	STATION: INDIAN POINT #2
P.W. ENG.	THIS REV IS NON-CLASS AS PER THE GAPD UPDATED DWG PER CR# 200108050 RELEASED FOR RECORD P/N 63901-AF 12-19-2001	CH	12-19-2001		JOHN J LOWNEY		GERARD BLENKLE		- UFSAR FIGURE No. 7.2-14	Con Edison
				REVIEW		APPROVALS			DRAWN BY	SCALE: NONE	REV: 0	DWG. NO. A225107-09 DB

REVISIONS	
V.I. 4/18/99	02
THIS REVISION IS NON-CLASS PER CI-240-1 UPDATED DWG. TO INCLUDE UFSAR FIG. NO. IN TITLE P/N 69911-NP RELEASED FOR RECORD DLA 4/18/99	
STRATUS ENGINEERING	

AL - Alarm

Buf - Buffer

f - Special Function (such as a pressure compensation unit or lead/log compensation)

FC - Flow controller (off-on unless output signal is shown)

FI - Flow Indicator

FT - Flow Transmitter

Hi L - High Level

Hi LRT - High Level Reactor Trip

Hi PRT - High Pressure Reactor Trip

I/I - Isolation Current Repeater

ISOL - Isolation (other than I/I)

LC - Level Controller (off-on unless output signal is shown)

LI - Level Indicator

L-Low - Low Level

Lo L - Low Level

Lo Lo L - Low Low Level

Lo LRT - Low Level Reactor Trip

Lo Lo LRT - Low Low level Reactor Trip

Lo PRT - Low Pressure Reactor Trip

L_{ref} - Programmed Reference Level

LT - Level Transmitter

NC - Nuclear Flux Controller

NE - Nuclear Detector

NI - Nuclear Flux Indicator

NQ - Nuclear Power Supply

PC - Pressure controller (off-on unless output signal is shown)

PI - Pressure Indicator

P_{ref} - Programmed Reference Pressure

PS - Power Supply

PT - Pressure Transmitter

R/I - Resistance to Current Converter

S - Control channel transfer switch (used to maintain auto channel during test of the protection channel)

SI - Safety Injection

T - Built-in Test Point

TE - Temperature Element

TJ - Test Signal Insertion Jack

TP - Test Point

ΦU,L - Out of core upper or lower ion chamber flux signals

02

NI

STATION- INDIAN POINT 2 (UFSAR FIGURE NO. 7.2-28)	APPROVALS: CHIEF DESIGN ENG.	CONSOLIDATED EDISON CO. OF N.Y., INC.
DRAWN BY REPRO CHECKED	DE ENG. 9/9/85	DWG. NO. E 243311-02
SCALE NONE J. O. 32357-00	ENG.	RECORDED

57952

92906 GEN ENG.

3/3/2004 8:00:56 PM 243312-0-1.dwg

REVISIONS	
	0

THIS REV. IS NON-CLASS AS PER CI-240-1 RELEASED FOR INFO ONLY PN 32357 4-24-85

V.I. 4/18/99	01

THIS REVISION IS NON-CLASS PER CI-240-1 UPDATED DWG. TO INCLUDE UFSAR FIG. NO. IN TITLE P/N 69911-NP RELEASED FOR RECORD DLA 4/18/99

STRATUS ENGINEERING

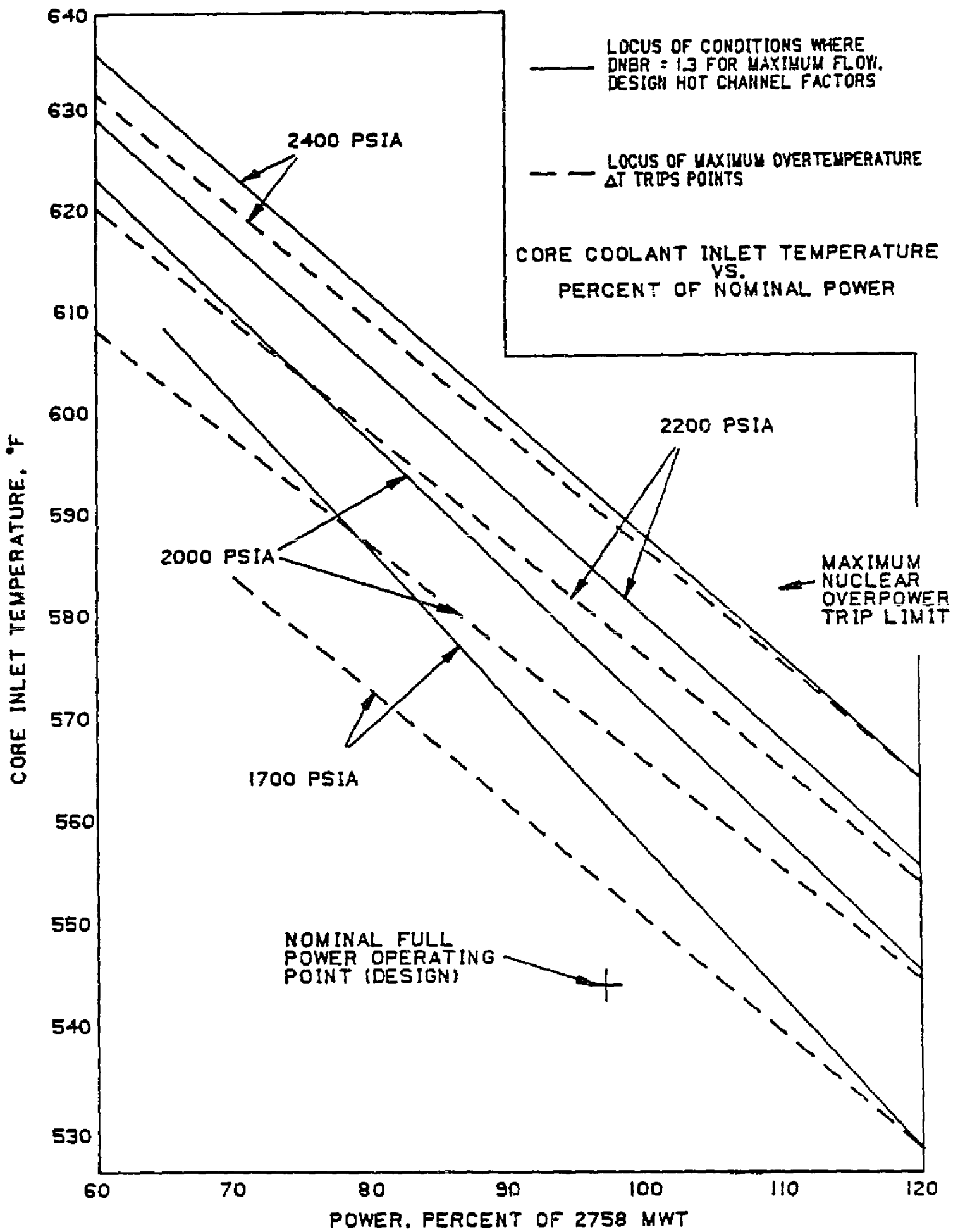

01

MI

STATION- INDIAN POINT 2

UFSAR FIGURE No. 7.2-19

DRAWN BY REPRO CHECKED

SCALE NONE J. O. 32357-00

APPROVALS

CHIEF DESIGN ENG.

ENG. 7/3/85

DE ENG. 9/9/85

CONSOLIDATED EDISON CO. OF N.Y., INC.

DWG. NO. E 243312-01

RECORDED

57952

92906 GEN ENG.

3/3/2004 8:01:04 PM 243313-0-1.dwg

REVISIONS	
	0

THIS REV. IS NON-CLASS AS PER CI-240-1 RELEASED FOR INFO ONLY PN 32357 4-24-85

V.I. 4/18/99	01

THIS REVISION IS NON-CLASS PER CI-240-1 UPDATED DWG. TO INCLUDE UFSAR FIG. NO. IN TITLE P/N 69911-NP RELEASED FOR RECORD DLA 4/18/99

STRATUS ENGINEERING

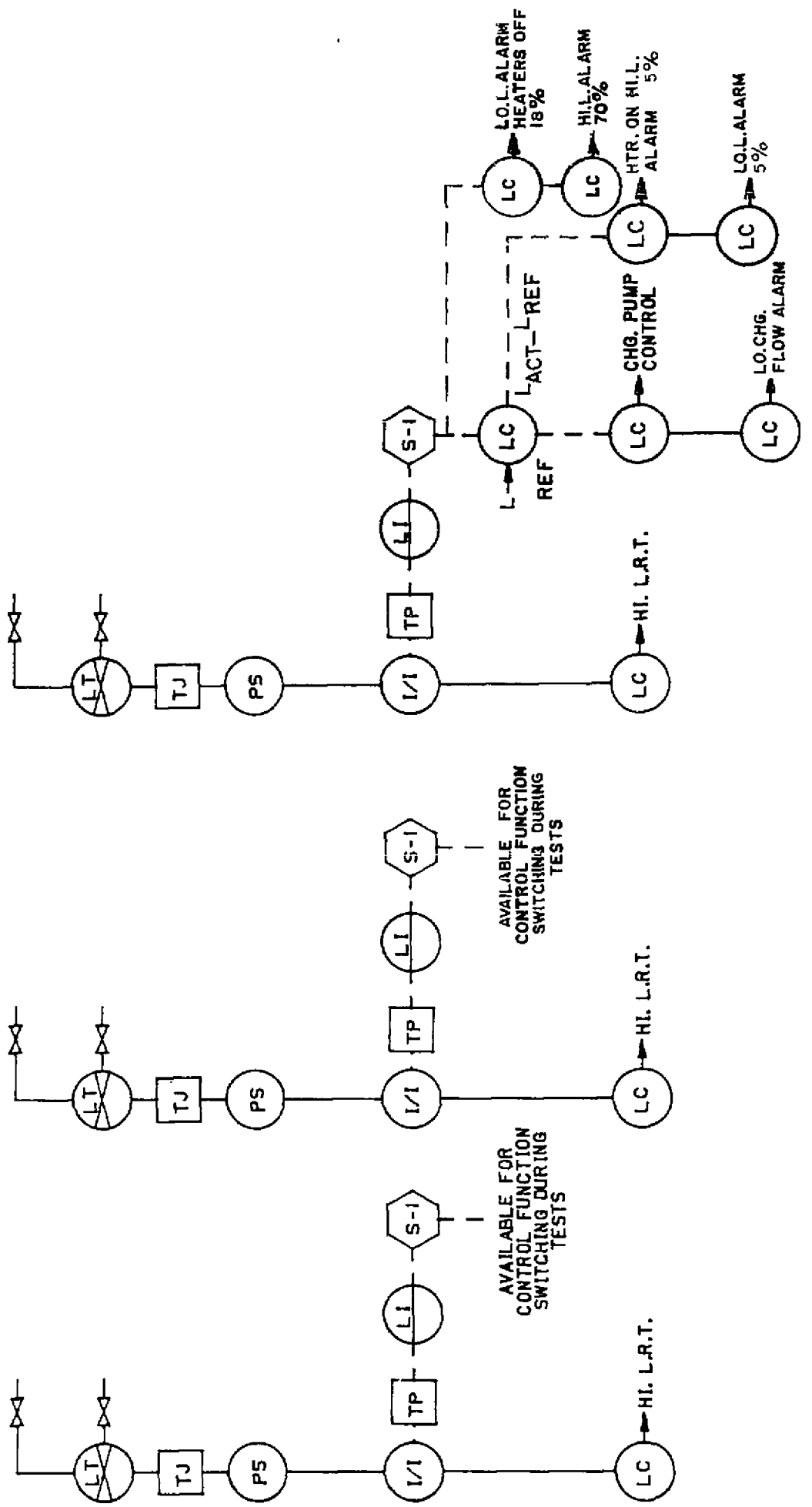

PRESSURIZER LEVEL CONTROL AND PROTECTION SYSTEM

01

MI

STATION- INDIAN POINT 2 (UFSAR FIGURE NO. 7.2-20)	APPROVALS	CHIEF DESIGN ENG.	CONSOLIDATED EDISON CO. OF N.Y., INC.
DRAWN BY REPRO CHECKED		ENG. 7/13/85	DWG. NO. E 243313-01
SCALE NONE J. O. 32357-00		ENG. 7/9/85	RECORDED

57952

929D6 GEN ENG.

57952

92PD6 GEN ENG.

REV	DESCRIPTION	DATE	BY	CHK'D	APP.
04	INCORPORATED EC-7829	05/18/08	JS	APPROVAL SIGNATURES ON FILE	

REVISIONS

LEGEND

S-2 CHANNEL 1,2,3,4 SELECTOR SWITCH

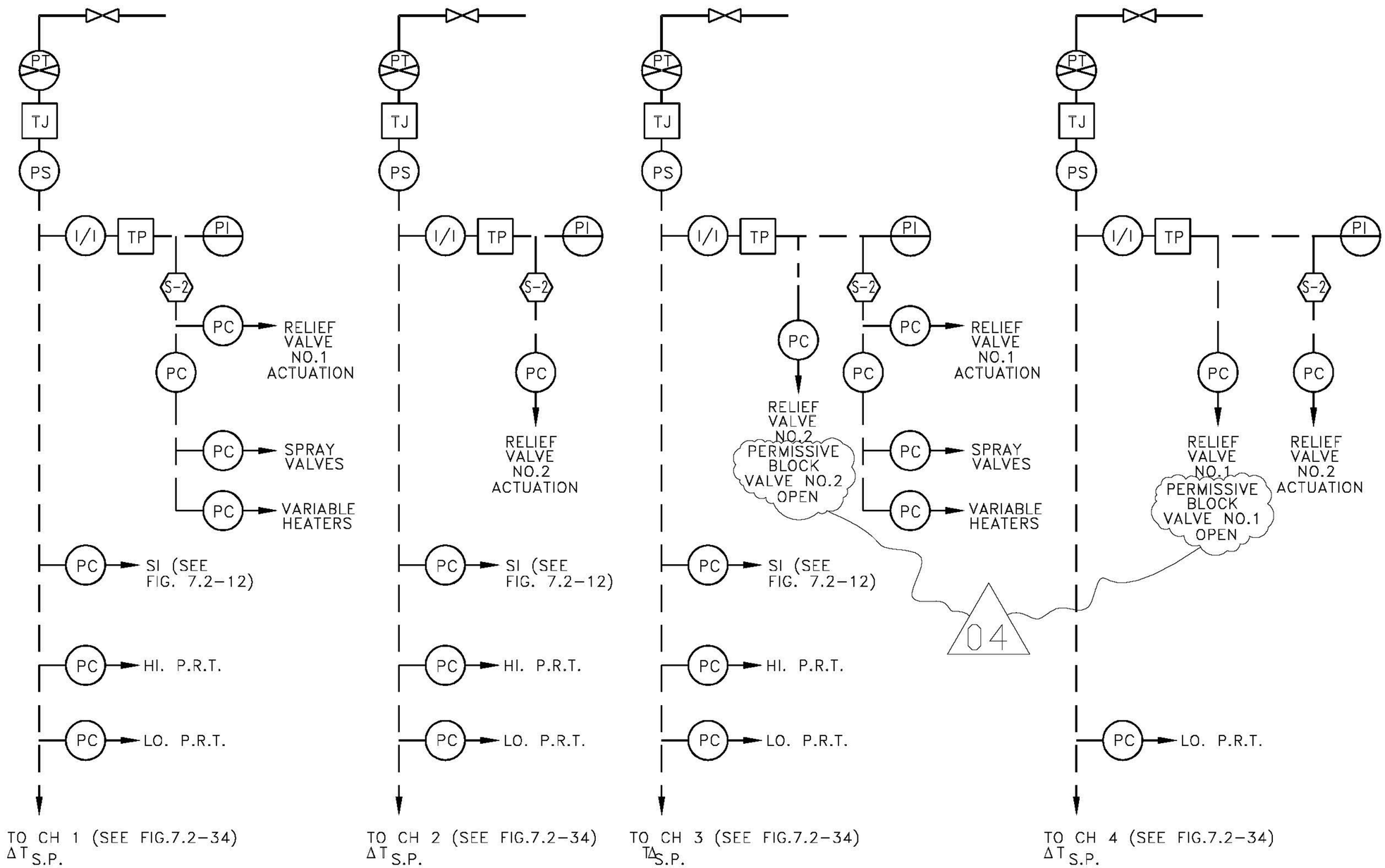

PRESSURIZER PRESSURE CONTROL AND PROTECTION SYSTEM

STATION- INDIAN POINT 2
UFSAR FIGURE NO. 7.2-21

DRAWN BY REPRO CHECKED
SCALE NONE J.O. 32357-00

APPROVALS
CHIEF DESIGN ENG.
ENG.
ENG.

CONSOLIDATED EDISON CO. OF N.Y., INC.
DWG. NO. E 243314-04
RECORDED

MI

REVISIONS		
	/ /	0

THIS REV. IS NON-CLASS AS PER CI-240-1 RELEASED FOR INFO ONLY PN 32357 4-24-85

V.I. 4/18/99	01

THIS REVISION IS NON-CLASS PER CI-240-1 UPDATED DWG. TO INCLUDE UFSAR FIG. NO. IN TITLE P/N 69911-NP RELEASED FOR RECORD DLA 4/18/99

STRATUS ENGINEERING

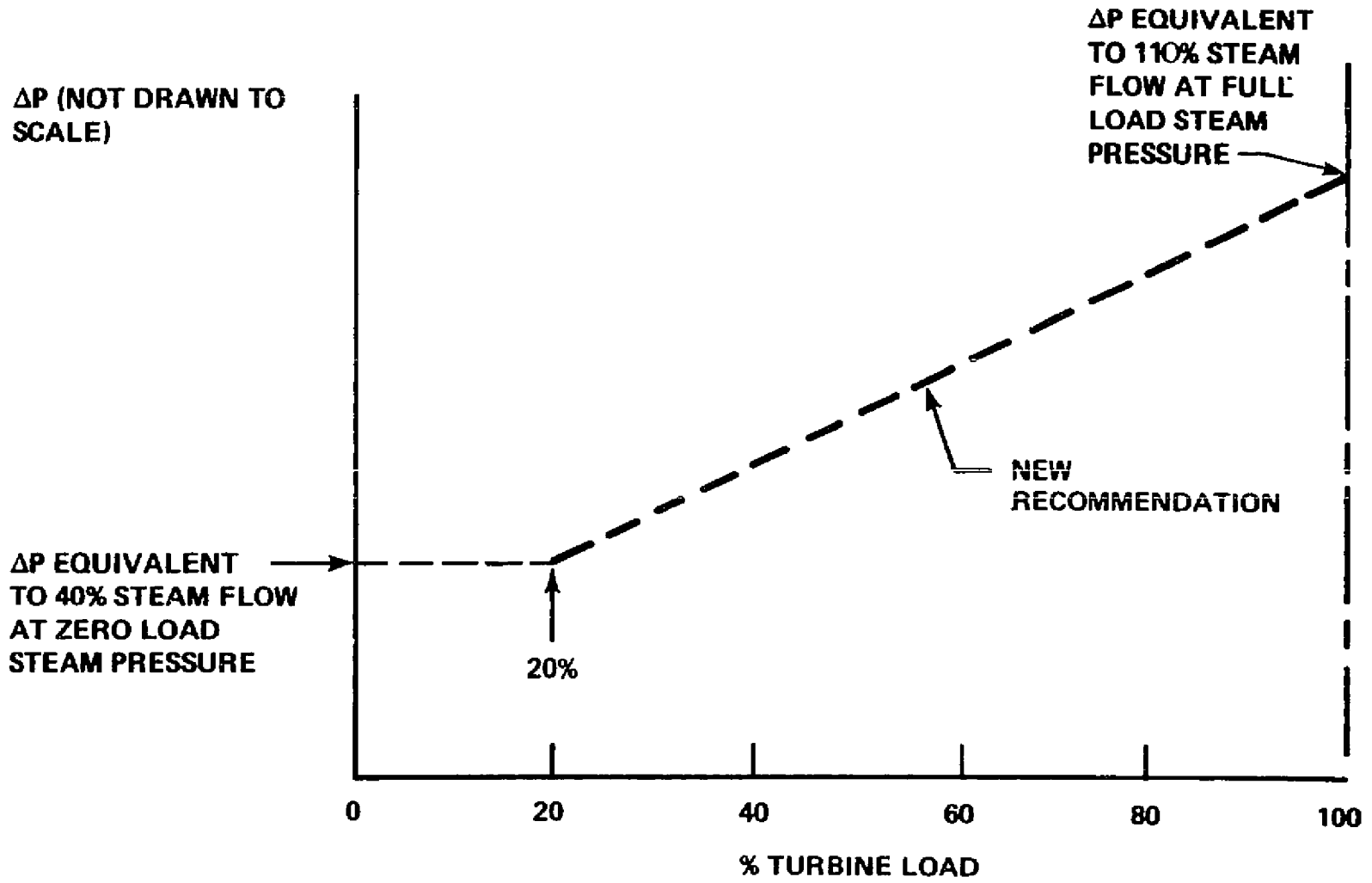

01

MI

STATION- INDIAN POINT 2

UFSAR FIGURE NO. 7.2-22

DRAWN BY REPRO CHECKED

SCALE NONE J. O. 32357-00

APPROVALS

CHIEF DESIGN ENG. 2/14/84

ENG. 3/13/85

DE ENG. 9/9/85

CONSOLIDATED EDISON CO. OF N.Y., INC.

DWG. NO. E 243315-01

RECORDED

57952

929D6 GEN ENG.

REVISIONS	
	0

THIS REV. IS NON-CLASS AS PER CI-240-1 RELEASED FOR INFO ONLY PN 32357 4-24-85

V.I. 4/18/99	01

THIS REVISION IS NON-CLASS PER CI-240-1 UPDATED DWG. TO INCLUDE UFSAR FIG. NO. IN TITLE P/N 69911-NP RELEASED FOR RECORD DLA 4/18/99

STRATUS ENGINEERING

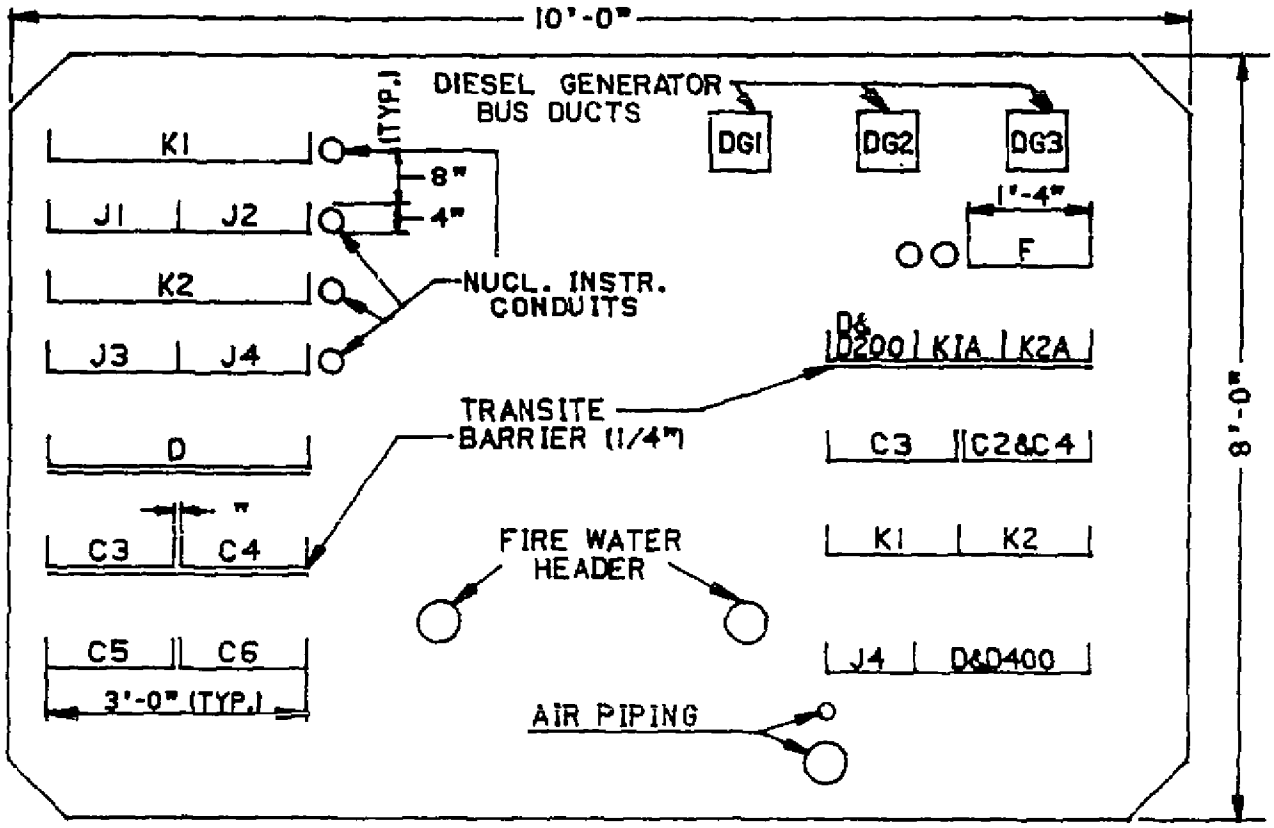

TYPICAL SECTION-CABLE TUNNEL

K1 CONTROL TRAY ONE CHANNEL (FOR VALVE CONTROL) ETC
J1-J2 2 INSTR TRAYS WITH BARRIERS-2 CHANNELS
K2 CONTROL TRAY ONE CHANNEL (FOR VALVE CONTROL) ETC
J3&J4 2 INSTR TRAYS WITH BARRIERS-2 CHANNELS
D MAX #12 WIRE FOR SMALL POWER & ONE CONTROL CHANNEL
C4 (480 HEAVY POWER) CONT RECIRC FAN 21 SAF INJ PUMP 21 RECIRC PUMP 21
C3 (480 V HEAVY POWER) CONT RECIRC FAN 25 RES HT REM PUMP 22 SAF INJ PUMP 23 CONT RECIRC FAN 23
C6 (460 V HEAVY POWER) CONT RECIRC FAN 22 SAF INJ PUMP 22
C5 (480 V HEAVY POWER) RECIRC PUMP 22 RES HT REM PUMP 22 CONT RECIRC FAN 24

F (1ST CHANNEL) DC SUPPLY (EMERG) DIESEL GEN CONT PNL 23 LTG & MOTOR FEEDERS
D & D200 - K1A-K2A DIESEL GEN CONTROL 3 CHANNELS
C3 (480V HEAVY POWER) COMP CLG PUMP 23 MCC27 FEEDER MCC 26B FEEDER LTG SWGR TRANSF 22 CHARGING PUMP 22 CHARGING PUMP 23 CONT SPRAY PUMP 22

C2 (480V HEAVY POWER) DC EMER LTG FEEDER
C4 CONT SPRAY PUMP 21 COMP COOLING PUMP 21 COMP COOLING PUMP 22 MCC 26A FEEDER LTG SWGR TRANSF 23 CHARGING PUMP 21

K1-K2 CONTROL, 2 CHANNELS
J4 INSTR 1 CHANNEL

D&D400 MISC SMALL POWER & CONTROL 1 CHANNEL

01

MI

STATION- INDIAN POINT 2
UFSAR FIGURE NO. 7.2-24

DRAWN BY REPRO CHECKED
SCALE NONE J. O. 32357-00

APPROVALS
CHIEF DESIGN ENG. 3/14/99
ENG. 7/1/85
DE ENG. 9/9/85

CONSOLIDATED EDISON CO. OF N.Y., INC.

DWG. NO. E 243317-01

RECORDED

57952

92906 GEN ENG.

REVISIONS	
03	0
THIS REV. IS NON-CLASS AS PER CI-240-1 RELEASED FOR INFO ONLY PN 32357 4-24-85	
V.JAYARAMAN 07-12-99	01
THIS REVISION IS NON-CLASS PER CI-240-1 UPDATED DWG. PER CRS #199806049, FILE O-2014. RELEASED FOR RECORD P.N.69911-NP G.To.	
V.JAYARAMAN 06/26/00	03
THIS REVISION IS NON-CLASS PER CI-240-1 UPDATED DWG. PER CRS #199800127 RELEASED FOR RECORD P.N.69982-CD AG/VJ	

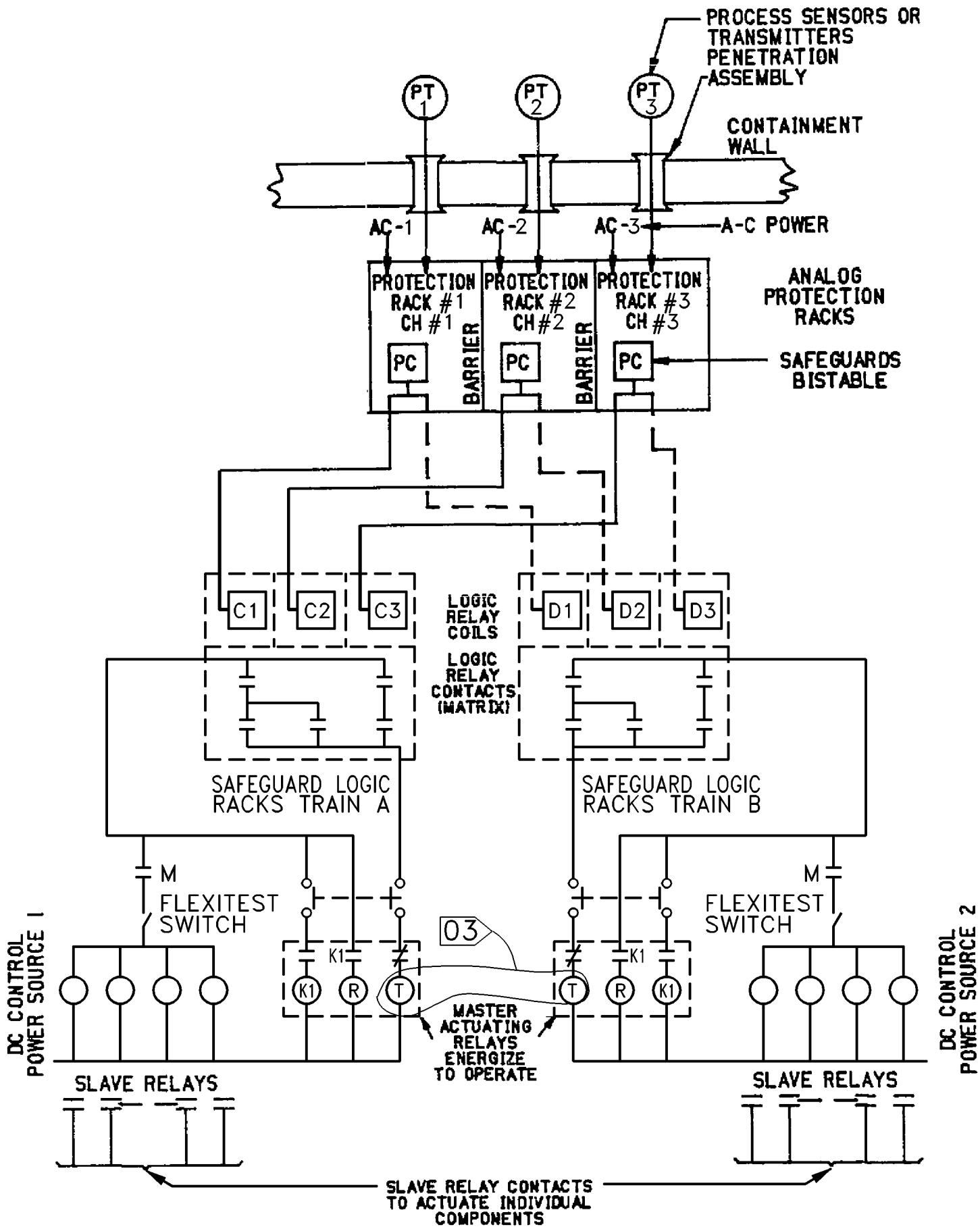

SAFEGUARD ACTUATION CIRCUITRY
AND HARDWARE CHANNELIZATION

MI

STATION- INDIAN POINT 2
UFSAR FIGURE NO. 7.2-15

DRAWN BY REPRO CHECKED
SCALE NONE J. O. 32357-00

APPROVALS
CHIEF DESIGN ENG.
ENG. 7/3/85
DE ENG. 9/9/85

CONSOLIDATED EDISON CO. OF N.Y., INC.

DWG. NO. E 243318-03

RECORDED

57952

92906 GEN ENG.

REVISIONS	
GDB 2	0

THIS REV. IS NON-CLASS AS PER CI-240-1 RELEASED FOR INFO ONLY PN 32357 4-24-85

V.JAYARAMAN 6/26/00	02

THIS REVISION IS NON-CLASS PER CI-240-1 UPDATED DWG. PER CRS 199800127 THE ENTIRE DWG IS REDRAWN. RELEASED FOR RECORD P/N 69982-CD AG/VJ

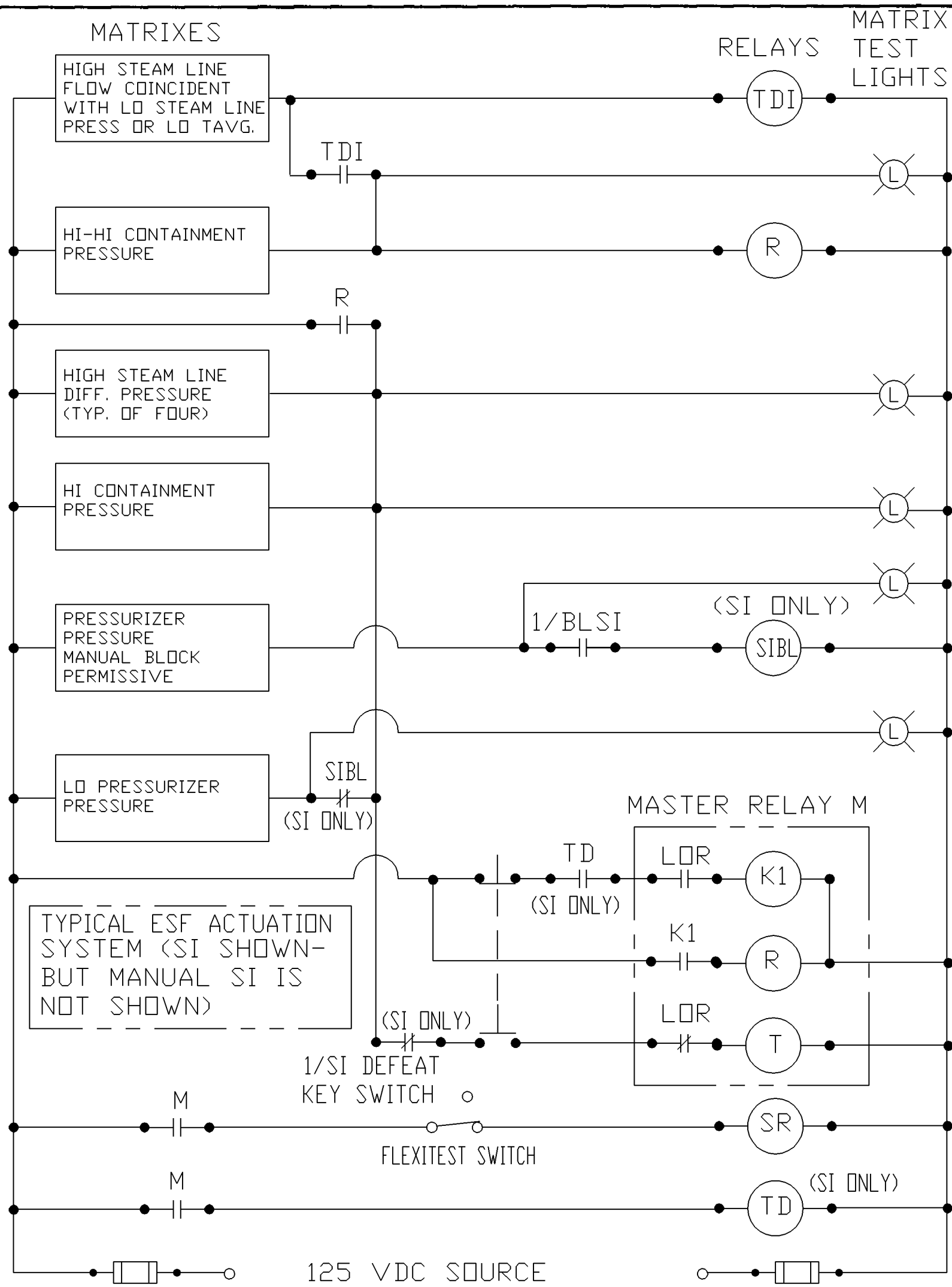

SIMPLIFIED DIAGRAM FOR OVERALL LOGIC RELAY TEST SCHEME

MI

STATION- INDIAN POINT 2 UFSAR FIGURE NO. 7.2-16	APPROVALS	CHIEF DESIGN ENG.	CONSOLIDATED EDISON CO. OF N.Y., INC.
DRAWN BY REPRO CHECKED		ENG. G. Fahlen 7/8/85	DWG. NO. E 243319-02
SCALE NONE J. O. 32357-00		ENG. B. Hoffman 7/9/85	RECORDED

57952

92906 GEN ENG.

REVISIONS	
6257	0
THIS REV. IS NON-CLASS AS PER CI-240-1 RELEASED FOR INFO ONLY PN 32357 4-24-85	
V.JAYARAMAN 08-24-99	1
THIS REV IS NON CLASS AS PER CI-240-1. REVISED DWG PER CRS #199806043, FILE O-2016. RELEASED FOR RECORD. P.N.69911-NP G.To.	
V.INGRAVALLO 11/15/99	02
THIS REVISION IS NON-CLASS PER CI-240-1 UPDATED DWG. TO INCLUDE UFSAR FIG. NO. IN TITLE P/N 69911-NP RELEASED FOR RECORD SW/PP	

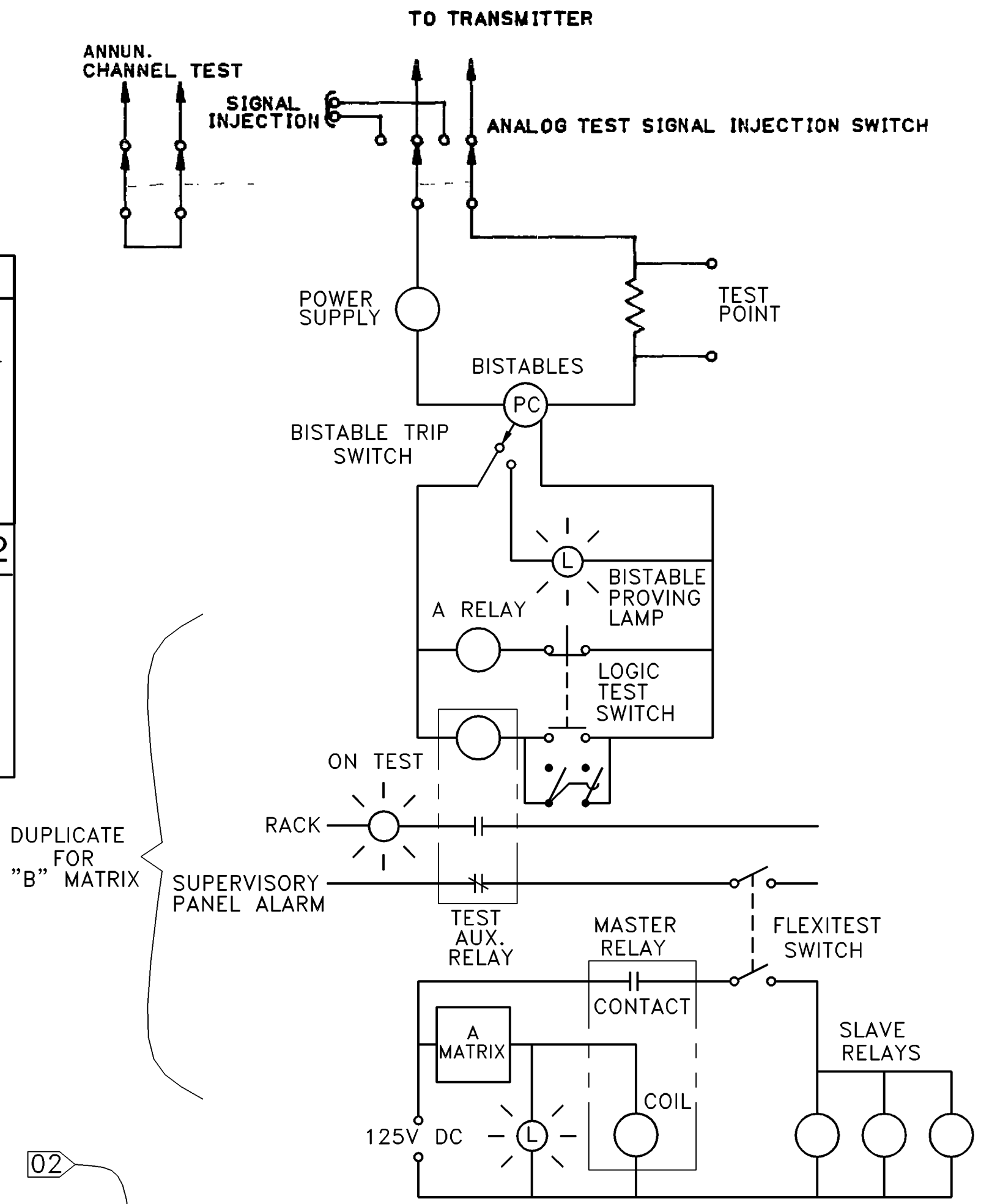

ANALOG AND LOGIC CHANNEL TESTING

MI

02

STATION- INDIAN POINT 2
UFSAR FIGURE NO. 7.2-17

DRAWN BY REPRO CHECKED
SCALE NONE J. O. 32357-00

APPROVALS
CHIEF DESIGN ENG. 2/4/85
ENG. 7/3/85
DE ENG 9/9/85

CONSOLIDATED EDISON CO. OF N.Y., INC.

DWG. NO. E 243320-02

RECORDED

57952

92906 GEN ENG.

REVISIONS

KPB	0

THIS REV. IS NON-CLASS AS PER CI-240-1 RELEASED FOR INFO ONLY PN 32357 4-24-85

VJ 3/28/00	2

THIS REVISION IS NON-CLASS PER CI-240-1 UPDATED DWG. PER CRS # 199904040, FILE 0-2814. RELEASED FOR RECORD P/N 69982-CM SG

VJ 2/12/01	3

THIS REVISION IS NON-CLASS PER CI-240-1 UPDATED DWG. TO CORRECT TYPO & REMOVE S.P. VALUE FOR RECORD P/N 69901-AF JH

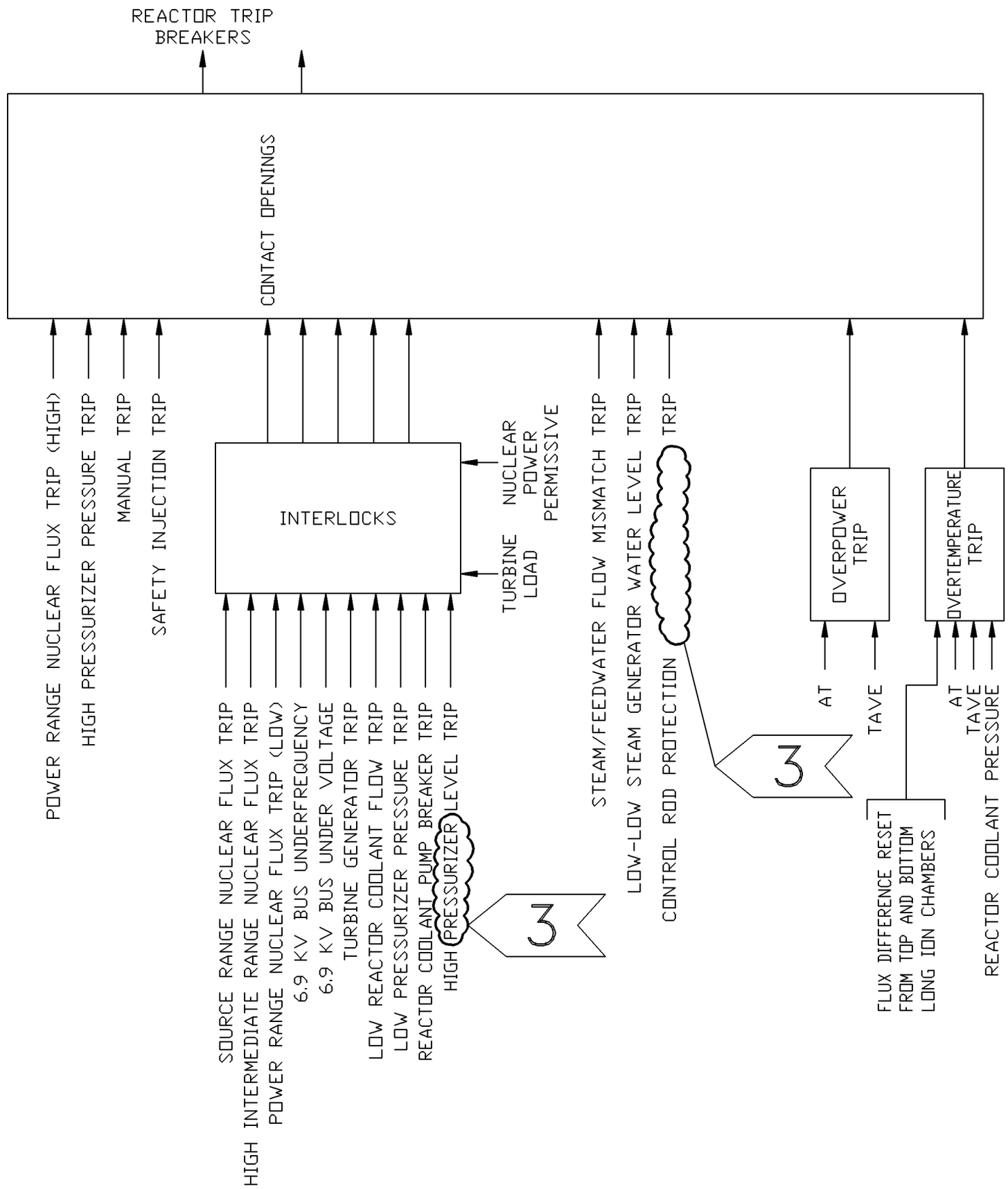

BLOCK DIAGRAM -
REACTOR PROTECTION SYSTEMS

MI

STATION- INDIAN POINT 2
UFSAR FIGURE NO. 7.2-18

DRAWN BY REPRO CHECKED
SCALE NONE J. O. 32357-00

APPROVALS
CHIEF DESIGN ENG. 4-4-85
ENG. 7/13/85
DE ENG. 9/9/85

CONSOLIDATED EDISON CO. OF N.Y., INC.

DWG. NO. E 243321-3

RECORDED

57952

929D6 GEN ENG.

REVISIONS		
	VJ	0

THIS REV. IS NON-CLASS AS PER CI-240-1 RELEASED FOR INFO ONLY PN 32357 4-24-85

M.R. 05/29/01	01

THIS REVISION IS NON-CLASS PER THE QAPD. UPDATED DWG. TO INCLUDE UFSAR FIG. NO. IN TITLE P/N 69901-AA RELEASED FOR RECORD J.H./T.D. 05/29/01

STRATUS ENGINEERING

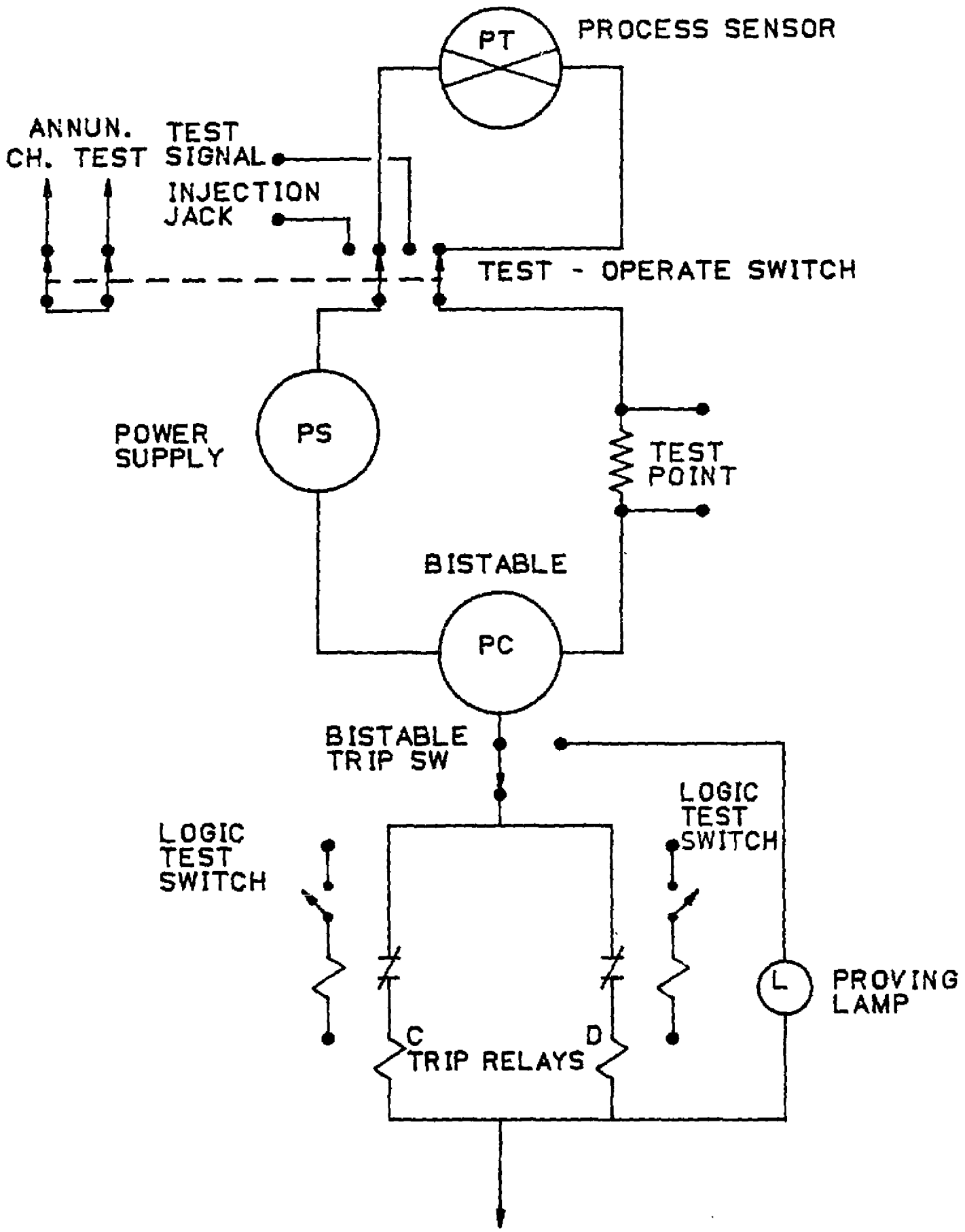

TYPICAL ANALOG CHANNEL TESTING ARRANGEMENT

01

MI

STATION- INDIAN POINT 2

UFSAR FIGURE NO. 7.2-25

DRAWN BY REPRO CHECKED

SCALE NONE J. O. 32357-00

APPROVALS

CHIEF DESIGN ENG. 2/14/89

ENG. 3/13/85

DE ENG. 9/9/85

CONSOLIDATED EDISON CO. OF N.Y., INC.

DWG. NO. E 243322-01

RECORDED

57952

92906 GEN ENG.

REVISIONS

0

THIS REV. IS NON-CLASS. AS PER CI-240-1 RELEASED FOR INFO ONLY PN32357 4-24-85

REVISION 5/25/88

V.I. 4/18/99 01

THIS REVISION IS NON-CLASS PER CI-240-1 UPDATED DWG. TO INCLUDE UFSAR FIG. NO. IN TITLE P/N 69911-NP RELEASED FOR RECORD DLA 4/18/99

STRATUS ENGINEERING

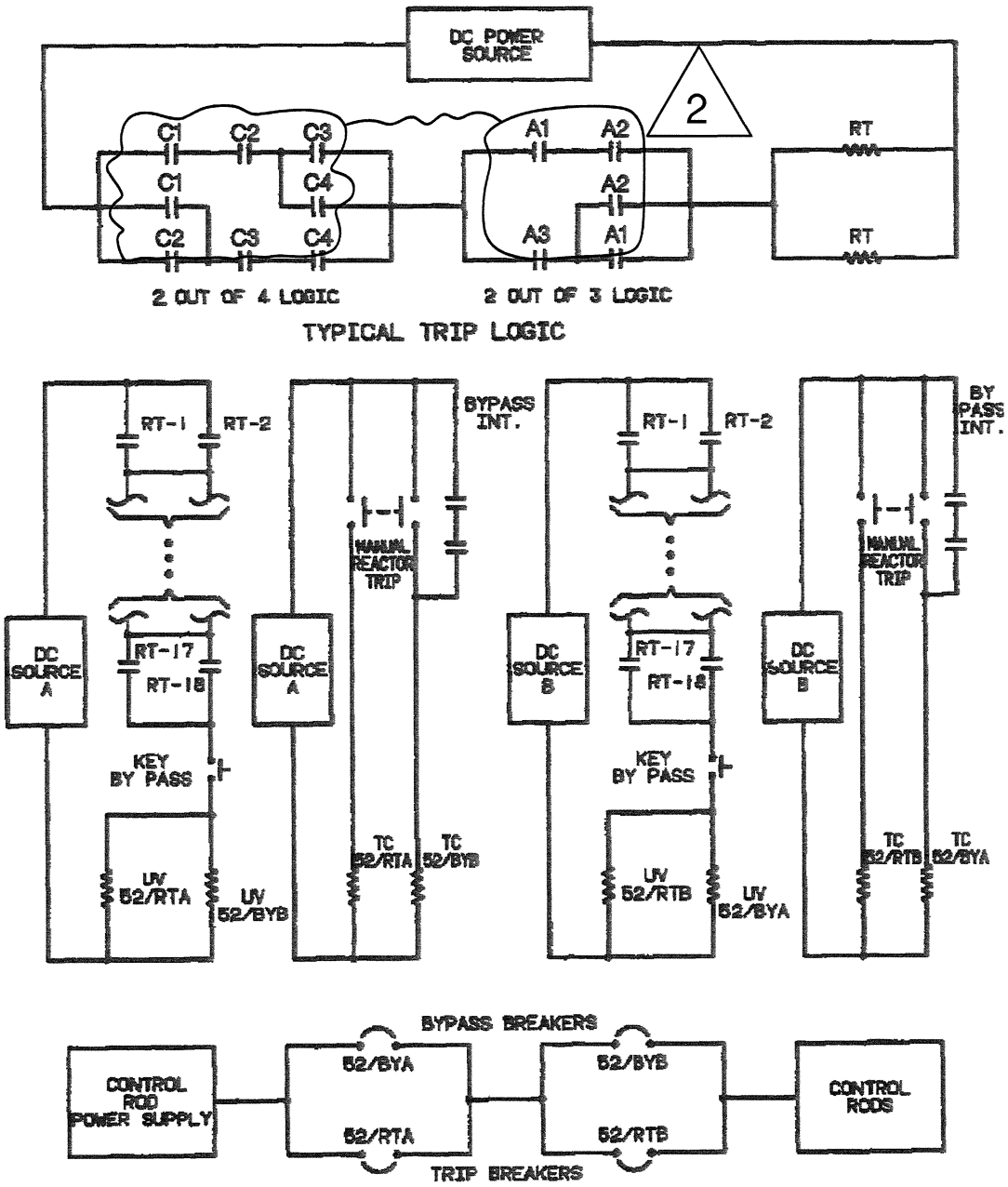

REV	DESCRIPTION	DATE	BY	CHK'D	APP.
2	INCORPORATED DRN-06-00911, ER-IP2-05-25318	3/14/06	JS		N/A

REVISIONS

2

MI

STATION- INDIAN POINT 2

DRAWN BY REPRO CHECKED

SCALE NONE J. O. 32357-00

APPROVALS

CHIEF DESIGN ENG. 2/14/89

ENG. 3/12/85

DE ENG. 9/9/85

CONSOLIDATED EDISON CO. OF N.Y., INC.

DWG. NO. E 243323-2

RECORDED

REPRO GEN. ENG.

REVISIONS

61	0

THIS REV. IS NON-CLASS AS PER CI-240-1 RELEASED FOR INFO ONLY PN32357 4-24-85

J.SCANDIFFIO 11-24-98	01

THIS REVISION IS NON CLASS AS PER CI-240-1. REVISED DWG. PER CITRS #98-E06025, FILE 0-2010. RELEASED FOR INFORMATION. P.N.69911-NP. G.To.

V.I. 4/18/99	02

THIS REVISION IS NON-CLASS PER CI-240-1 UPDATED DWG. TO INCLUDE UFSAR FIG. NO. IN TITLE P/N 69911-NP RELEASED FOR RECORD DLA 4/18/99

STRATUS ENGINEERING

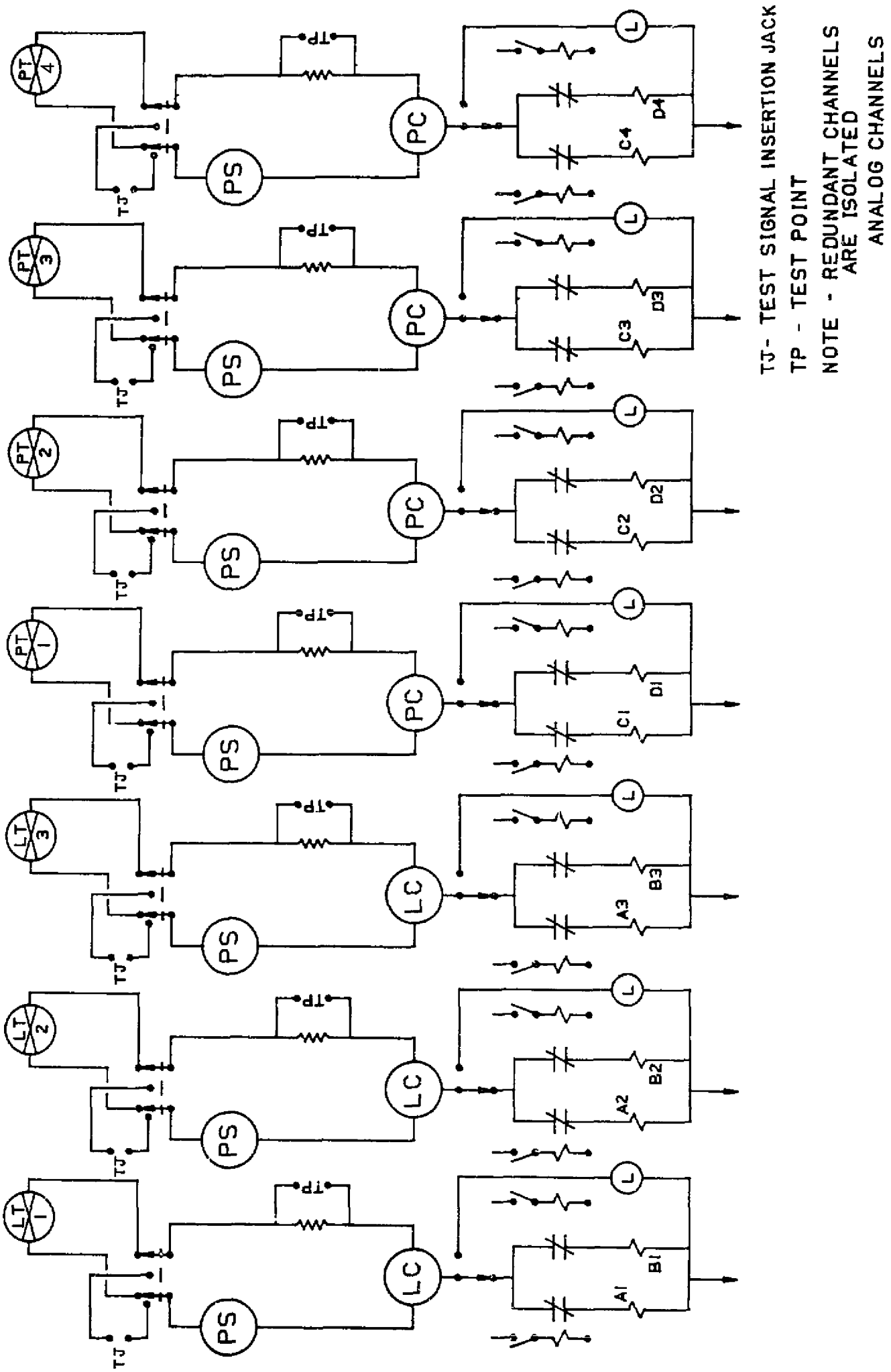

TJ- TEST SIGNAL INSERTION JACK

TP - TEST POINT

NOTE - REDUNDANT CHANNELS ARE ISOLATED ANALOG CHANNELS

02

MI

STATION- INDIAN POINT 2

UFSAR FIGURE NO. 7.2-27

DRAWN BY REPRO CHECKED

SCALE SCALE J. O. 32357-00

APPROVALS

CHIEF DESIGN ENG. 2/14/87

ENG. 3/12/85

ENG. 9/11/85

CONSOLIDATED EDISON CO. OF N.Y., INC.

DWG. NO. E 243324-02

RECORDED

57952

92906 GEN ENG.

REVISIONS

19	0

THIS REV. IS NON-CLASS AS PER CI-240-1 RELEASED FOR INFO ONLY PN 32357 4-24-85

V.I. 4/18/99	01

THIS REVISION IS NON-CLASS PER CI-240-1 UPDATED DWG. TO INCLUDE UFSAR FIG. NO. IN TITLE P/N 69911-NP RELEASED FOR RECORD DLA 4/18/99

STRATUS ENGINEERING

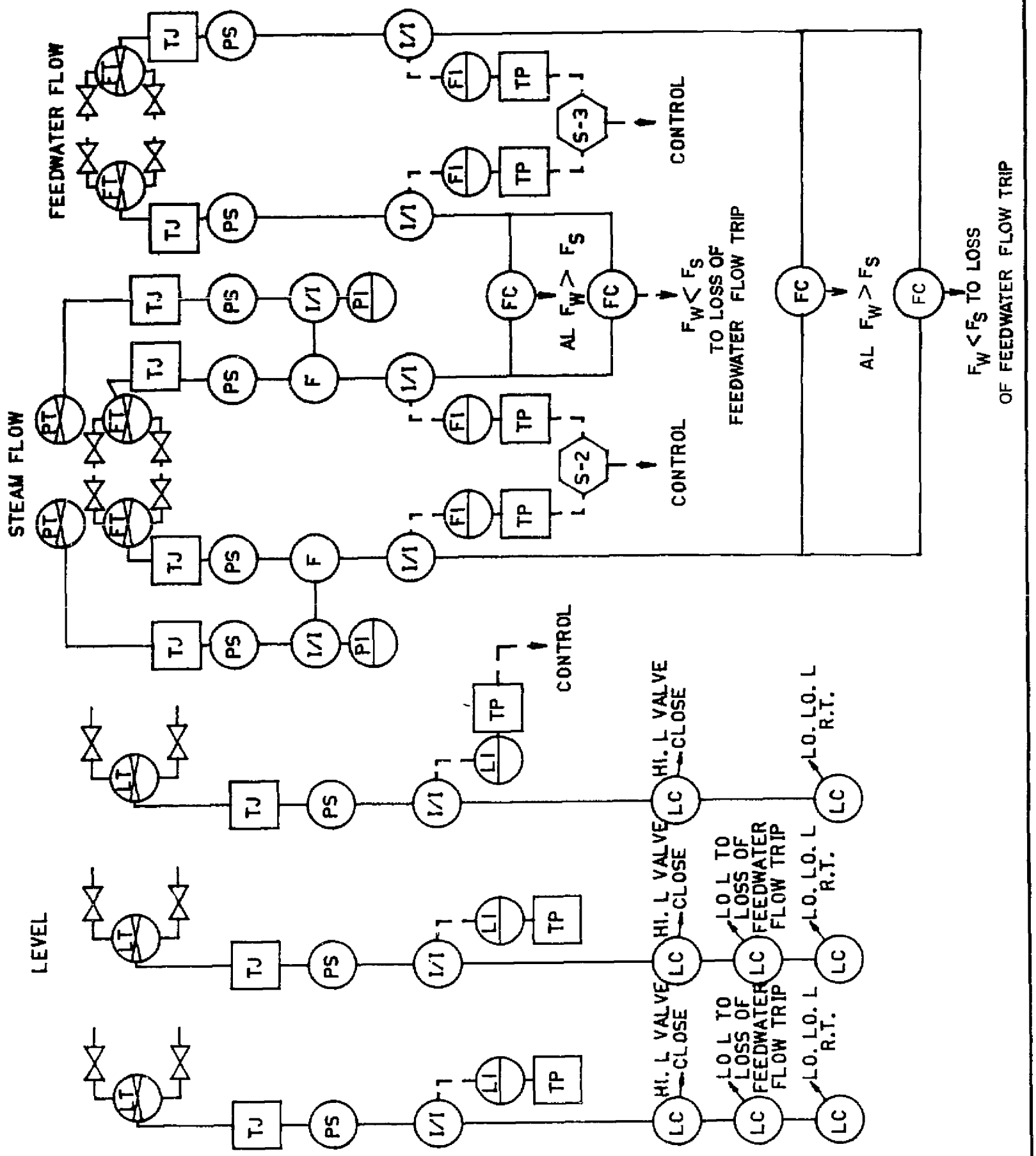

MI

01

STATION- INDIAN POINT 2

UFSAR FIGURE NO. 7.2-32

DRAWN BY REPRO CHECKED

SCALE NONE J. O. 32357-00

APPROVALS

CHIEF DESIGN ENG.

DES. ENG. 9/9/85

ENG.

CONSOLIDATED EDISON CO. OF N.Y., INC.

DWG. NO. E 243328-01

RECORDED

57952

929D6 GEN ENG.