03/25/2013 10:10:28 AM ewi1999MC3438-1-170.DWG
Model from the Model Vault - Entergy Nuclear Northeast - Indian Point Energy Center

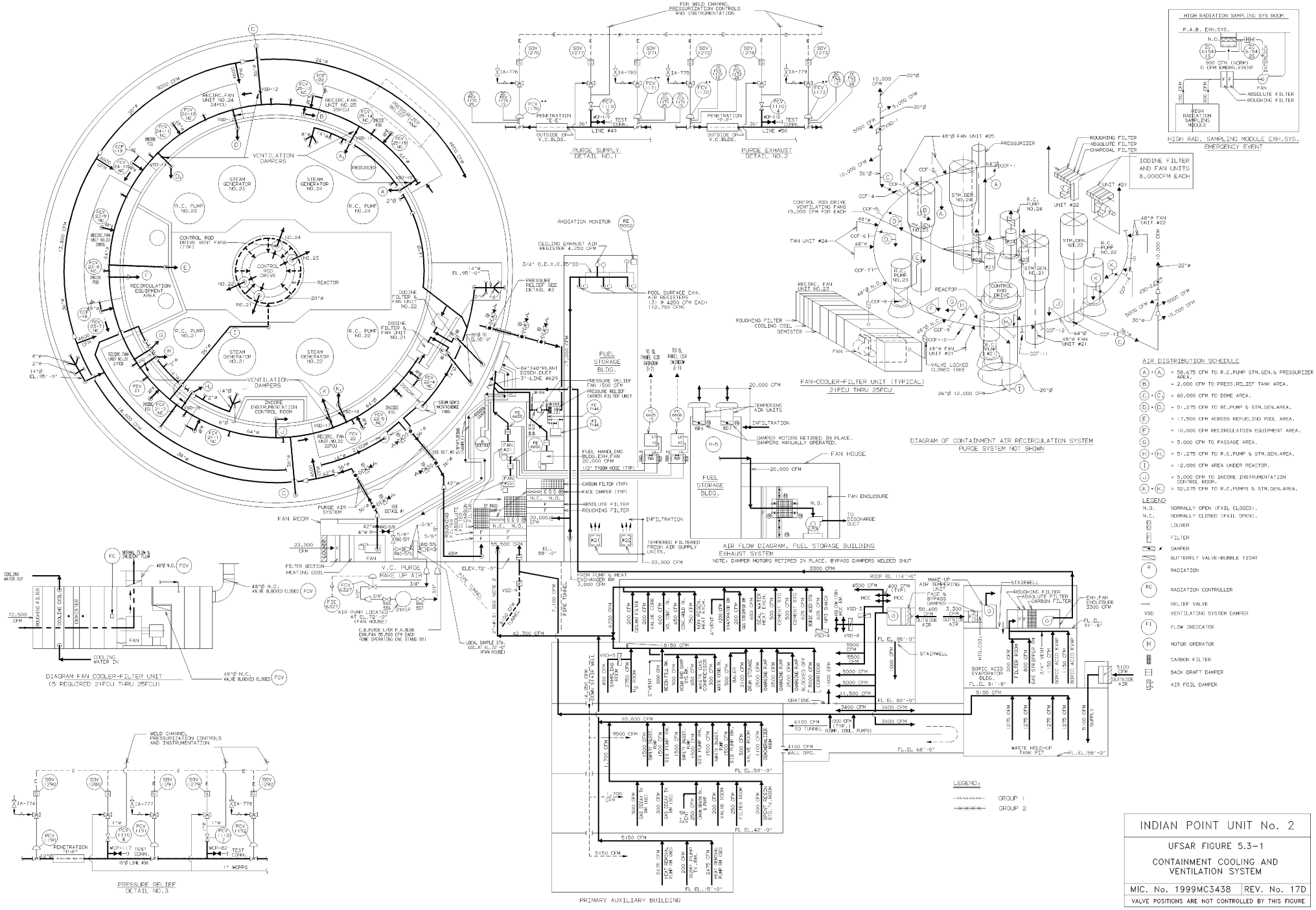

INDIAN POINT UNIT No. 2	
UFSAR FIGURE 5.3-1	
CONTAINMENT COOLING AND VENTILATION SYSTEM	
MIC. No. 1999MC3438	REV. No. 17D
VALVE POSITIONS ARE NOT CONTROLLED BY THIS FIGURE	

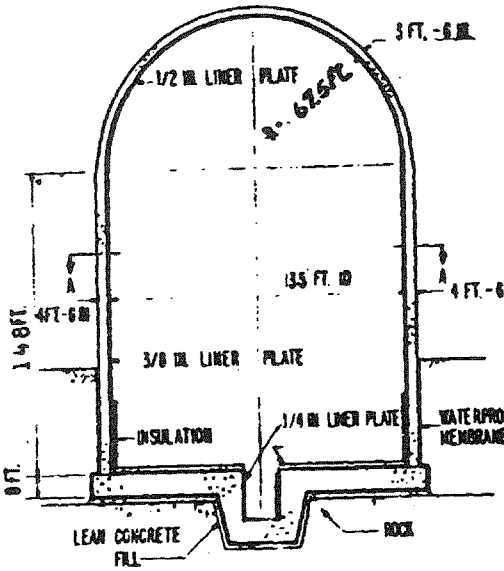

SECTIONAL ELEVATION

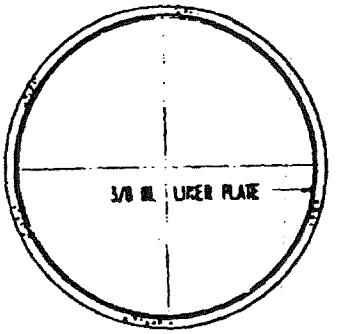

SECTION A-A

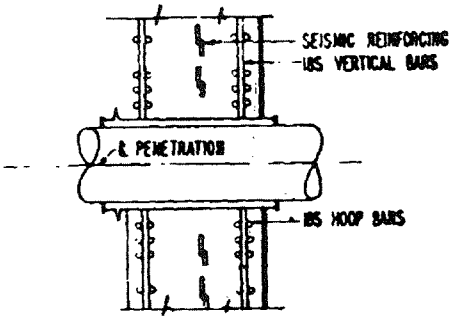

SECTION AT PENETRATION

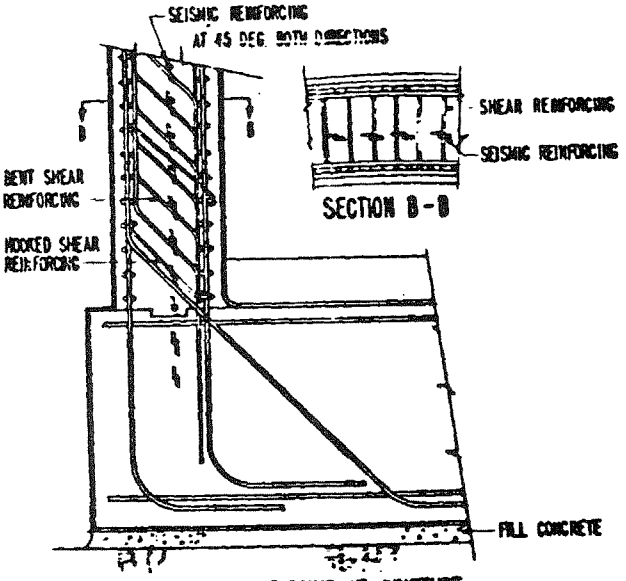

SECTION B-B

TYPICAL REINFORCING AT JUNCTURE OF CYLINDRICAL SHELL AND MAT

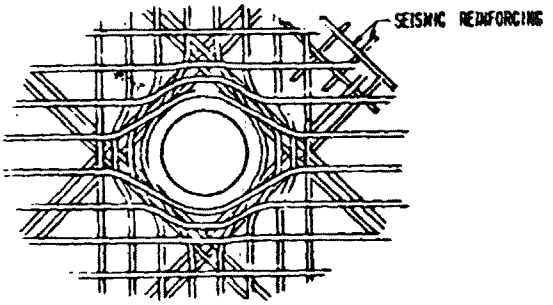

ELEVATION AT PENETRATION

INDIAN POINT UNIT No. 2	
UFSAR FIGURE 5.1-1 CONTAINMENT STRUCTURE	
MIC. No. 1999MC3746	REV. No. 17A

$C = 1.0D \pm 0.05D + 1.5P + 1.0(T+TL)$

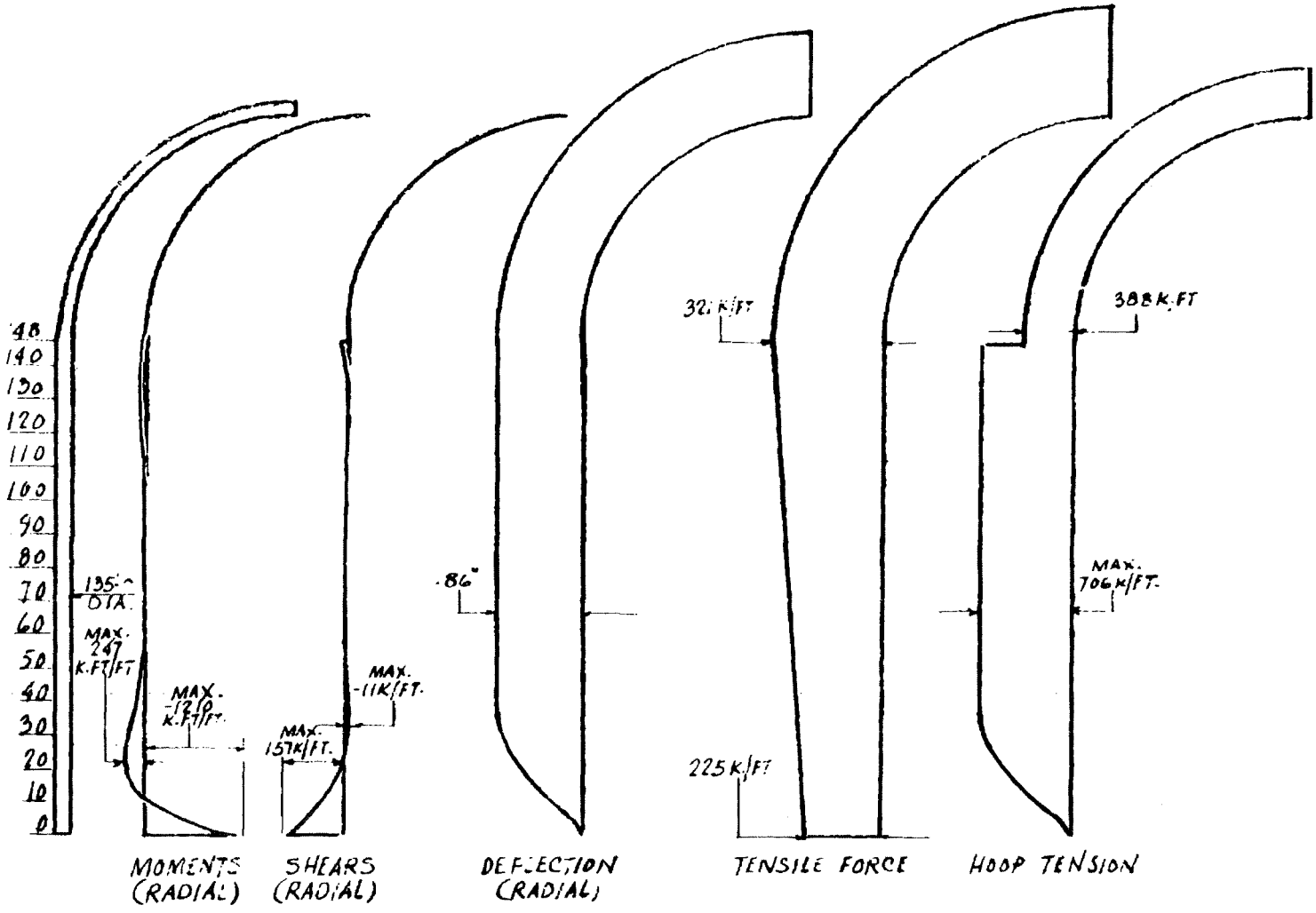

INDIAN POINT UNIT No. 2	
UFSAR FIGURE 5.1–11 CYLINDER AND DOME–LOAD CONDITION (A) – 1.5P	
MIC. No. 1999MC3750	REV. No. 17A

$$C = 1.0D \pm 0.05D + 1.25P + 1.0(T' + T_L') + 1.25E$$

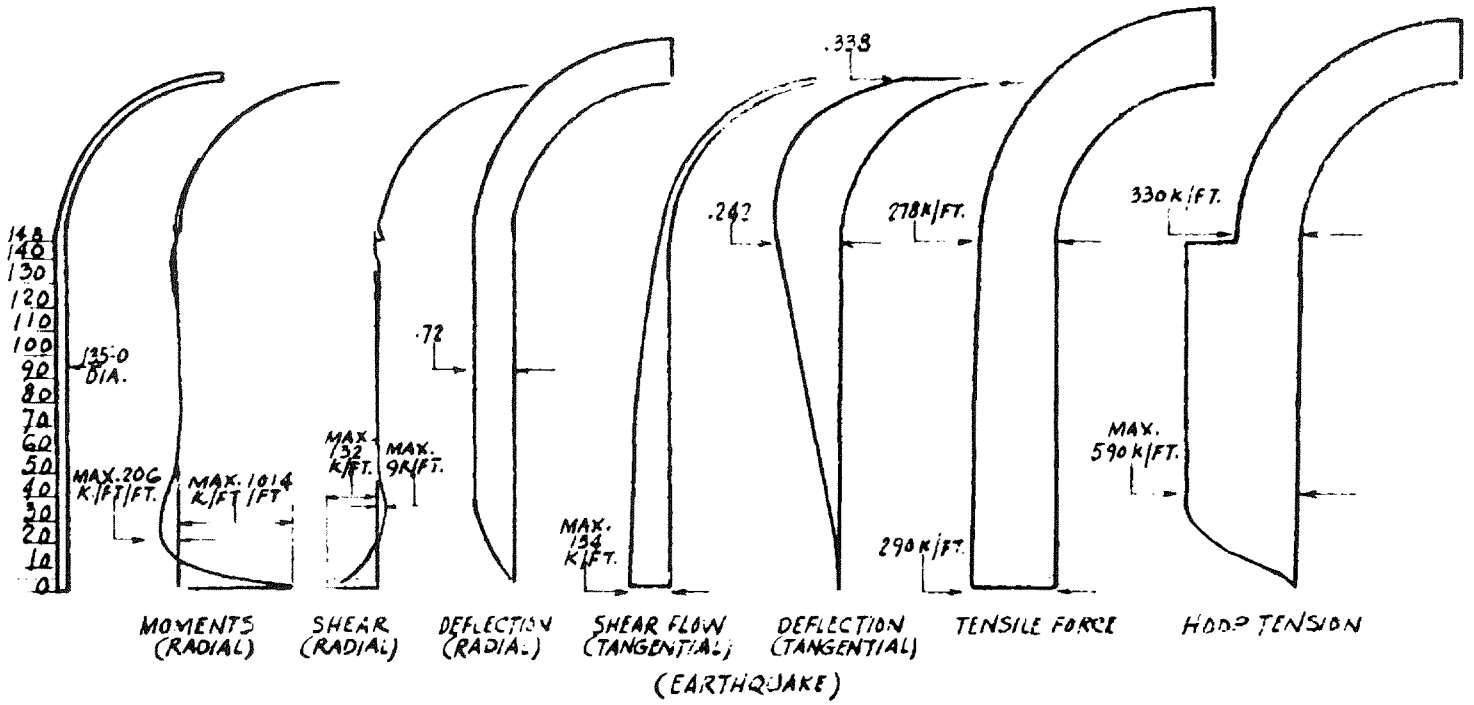

INDIAN POINT UNIT No. 2	
UFSAR FIGURE 5.1–12 CYLINDER AND DOME–LOAD CONDITION (B) – 1.25P	
MIC. No. 1999MC3751	REV. No. 17A

$$C = 1.0D \pm 0.05D + 1.0P + 1.0(T'' + TL'') + 1.0E'$$

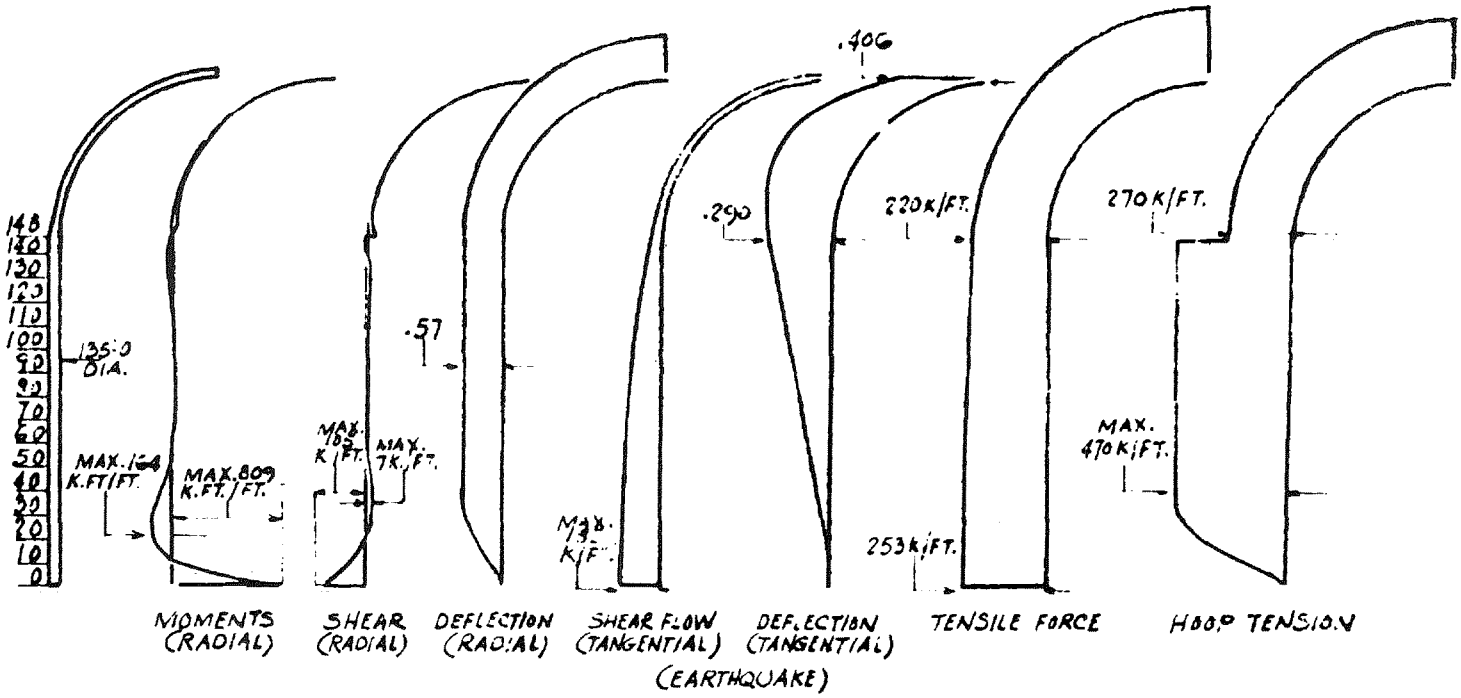

INDIAN POINT UNIT No. 2	
UFSAR FIGURE 5.1–13 CYLINDER AND DOME–LOAD CONDITION (C) – 1.0P	
MIC. No. 1999MC3752	REV. No. 17A

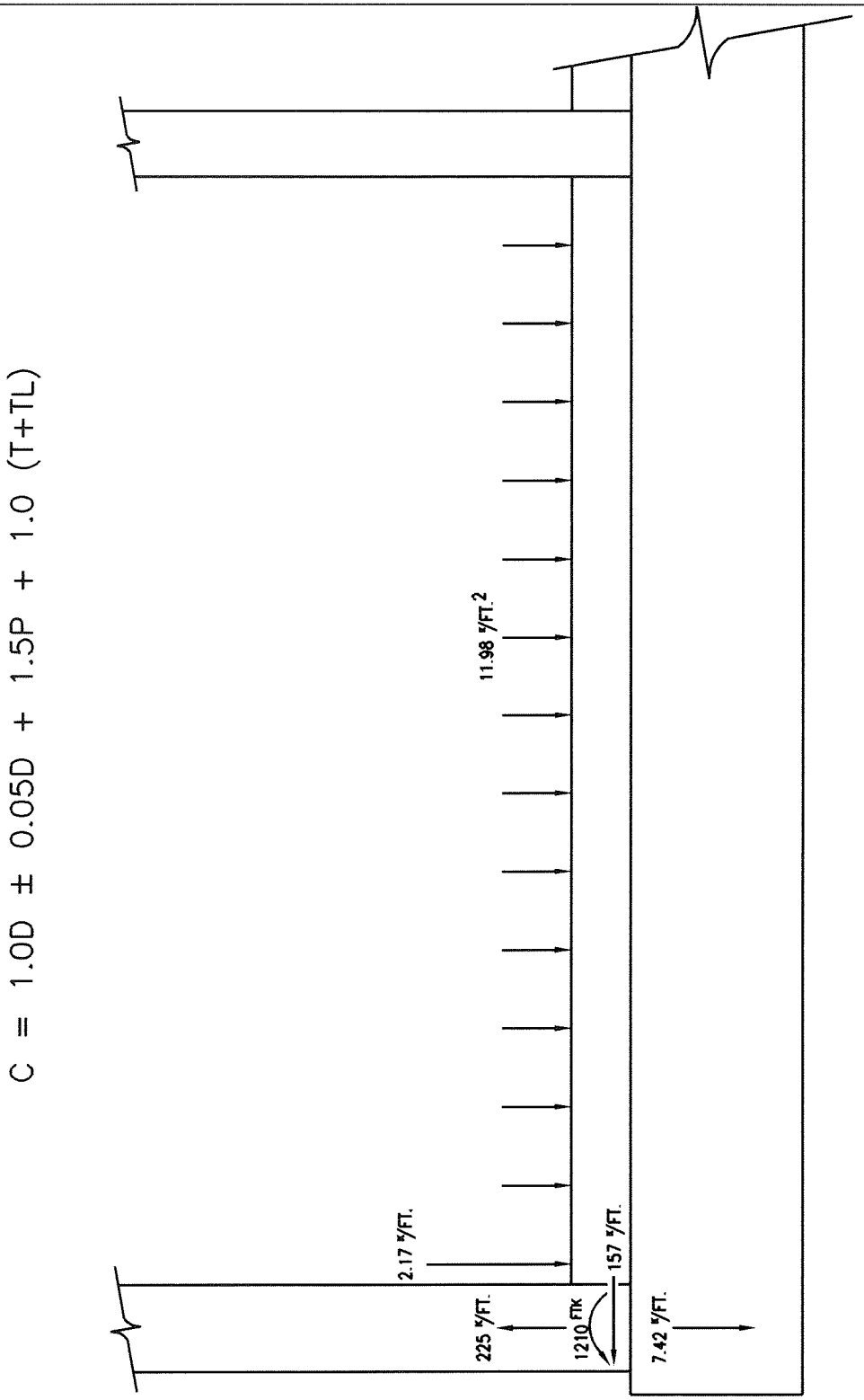

INDIAN POINT UNIT No. 2	
UFSAR FIGURE 5.1-14 LOADING DIAGRAM IN MAT-LOAD CONDITION (A) - 1.5P	
MIC. No. 1999MC3753	REV. No. 17A

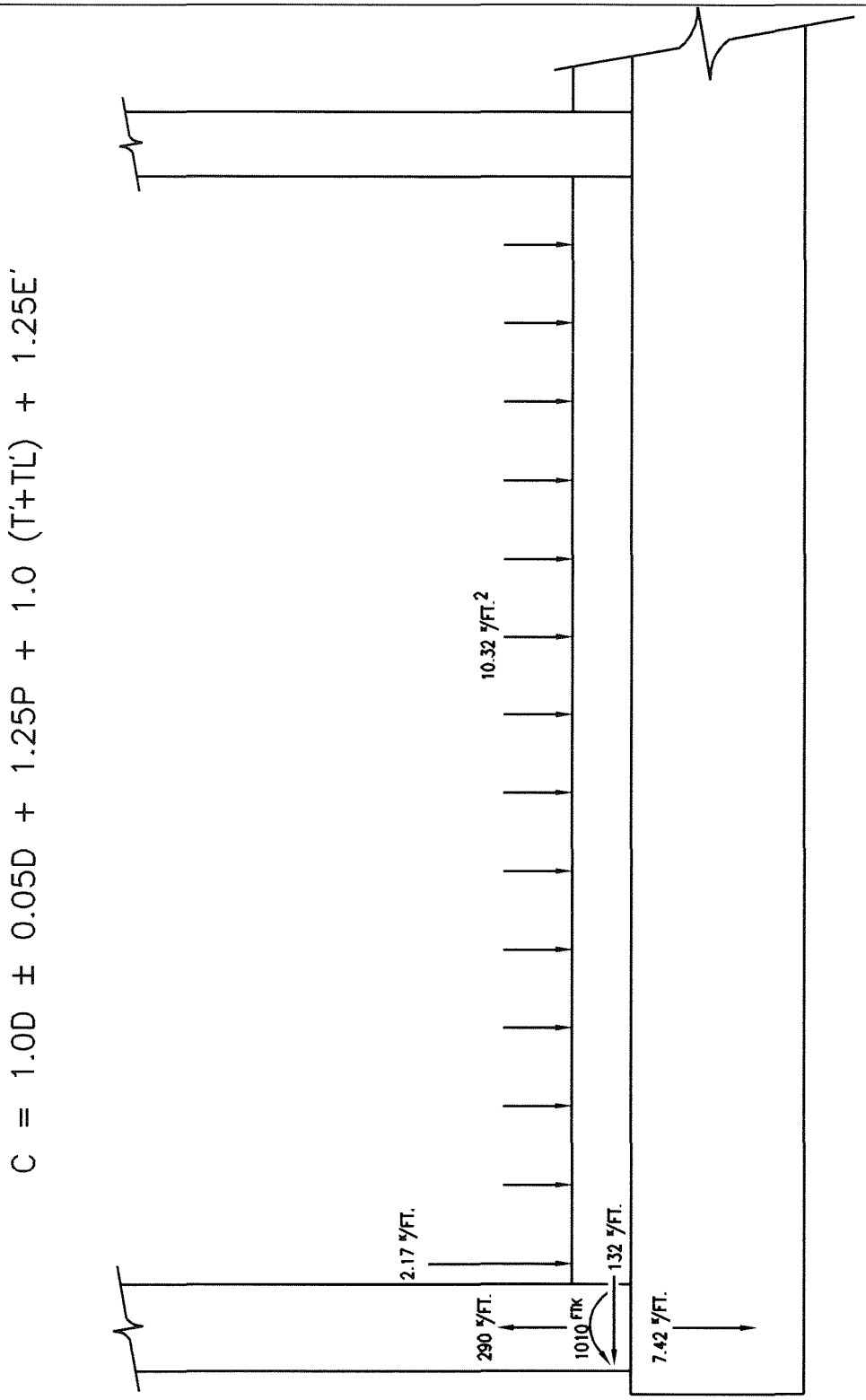

INDIAN POINT UNIT No. 2	
UFSAR FIGURE 5.1-15 LOADING DIAGRAM IN MAT-LOAD CONDITION (B) - 1.25P	
MIC. No. 1999MC3754	REV. No. 17A

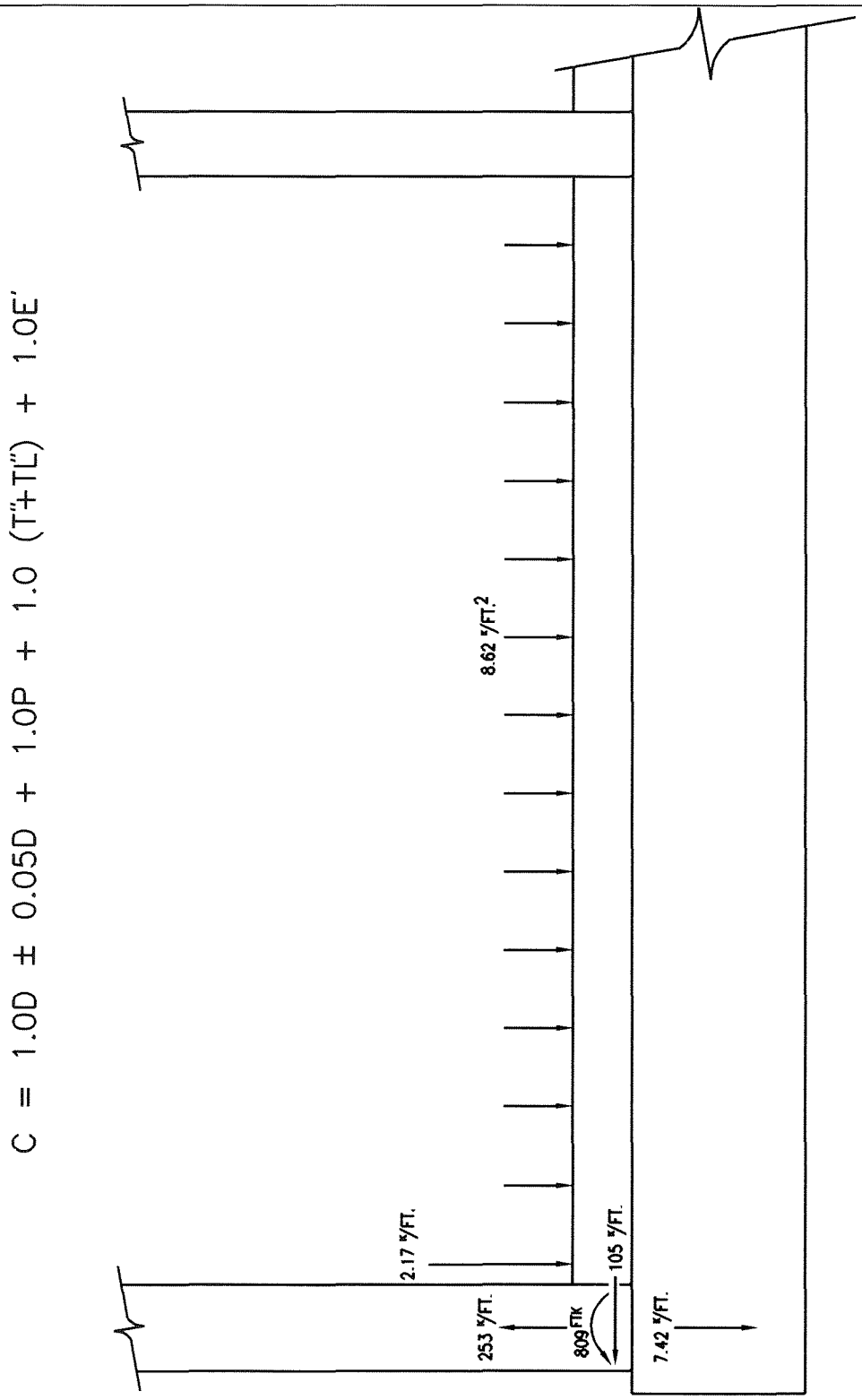

INDIAN POINT UNIT No. 2	
UFSAR FIGURE 5.1-16 LOADING DIAGRAM IN MAT-LOAD CONDITION (C) - 1.0P	
MIC. No. 1999MC3755	REV. No. 17A

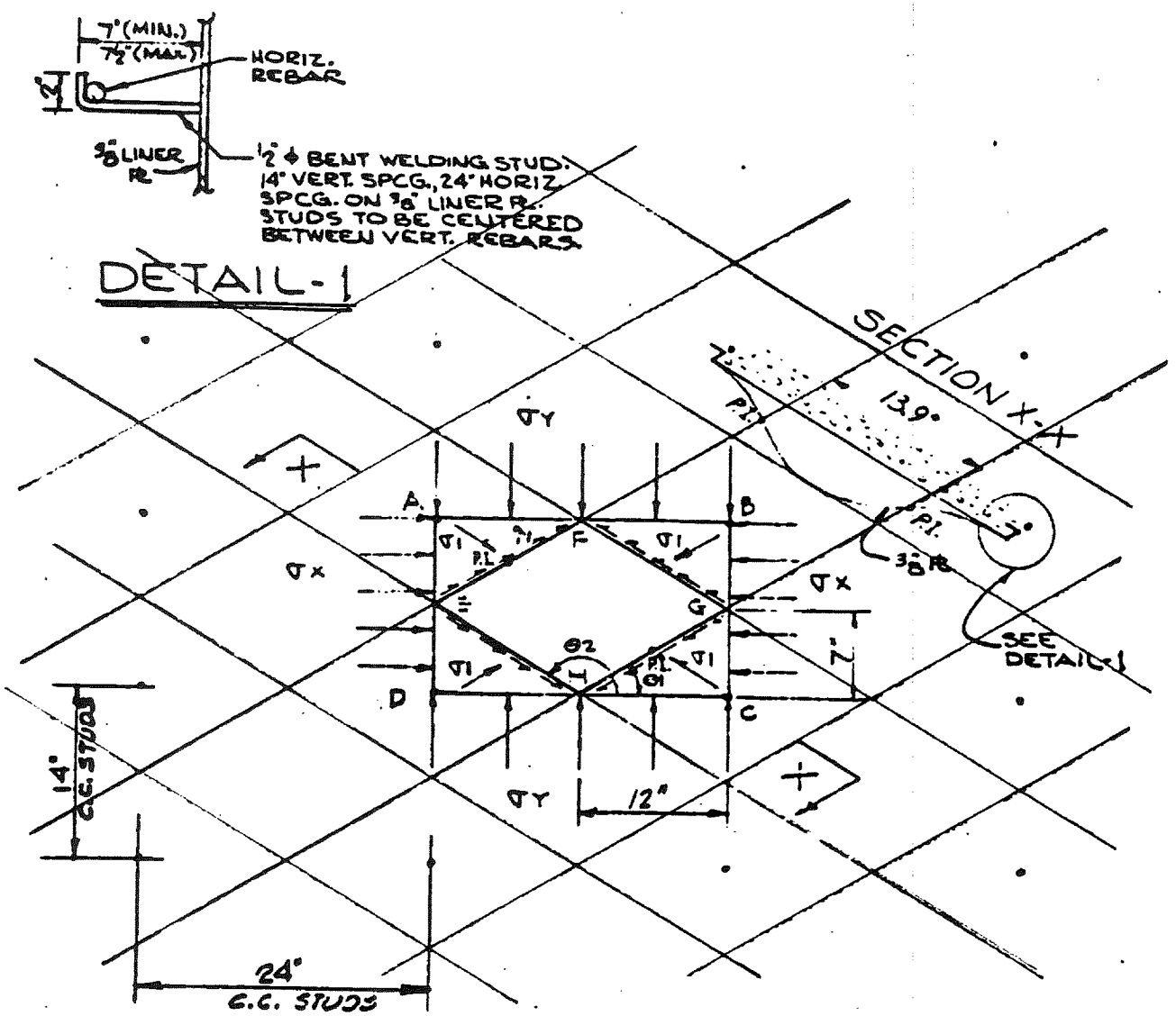

INDIAN POINT UNIT No. 2	
UFSAR FIGURE 5.1–17 WELD STUD CONNECTION AT PANEL LOW POINT	
MIC. No. 1999MC3756	REV. No. 17A

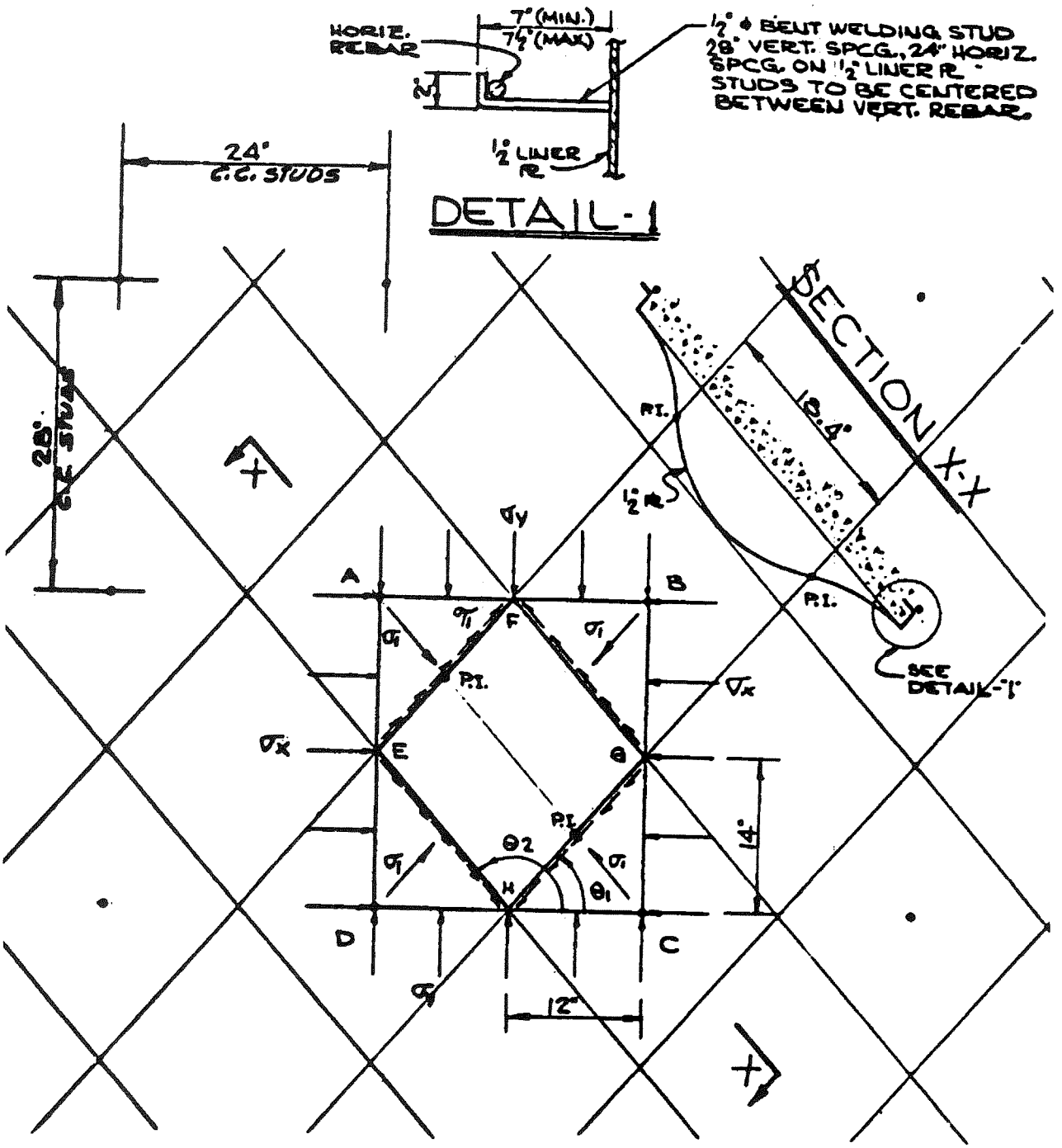

INDIAN POINT UNIT No. 2	
UFSAR FIGURE 5.1–18 WELD STUD CONNECTION AT PANEL LOW POINT	
MIC. No. 1999MC3757	REV. No. 17A

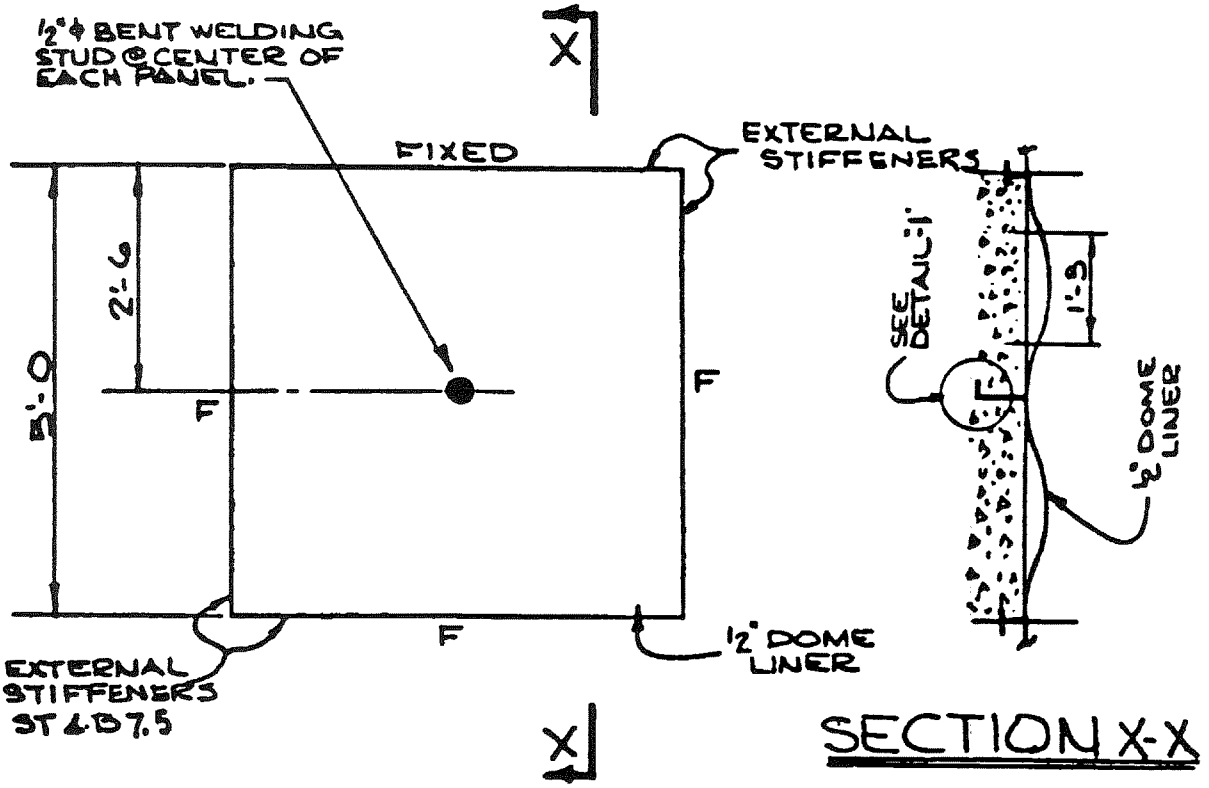

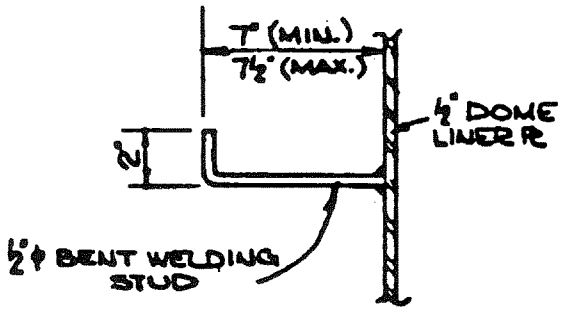

DETAIL 1

INDIAN POINT UNIT No. 2	
UFSAR FIGURE 5.1–19 WELD STUD CONNECTION AT PANEL CENTER	
MIC. No. 1999MC3758	REV. No. 17A

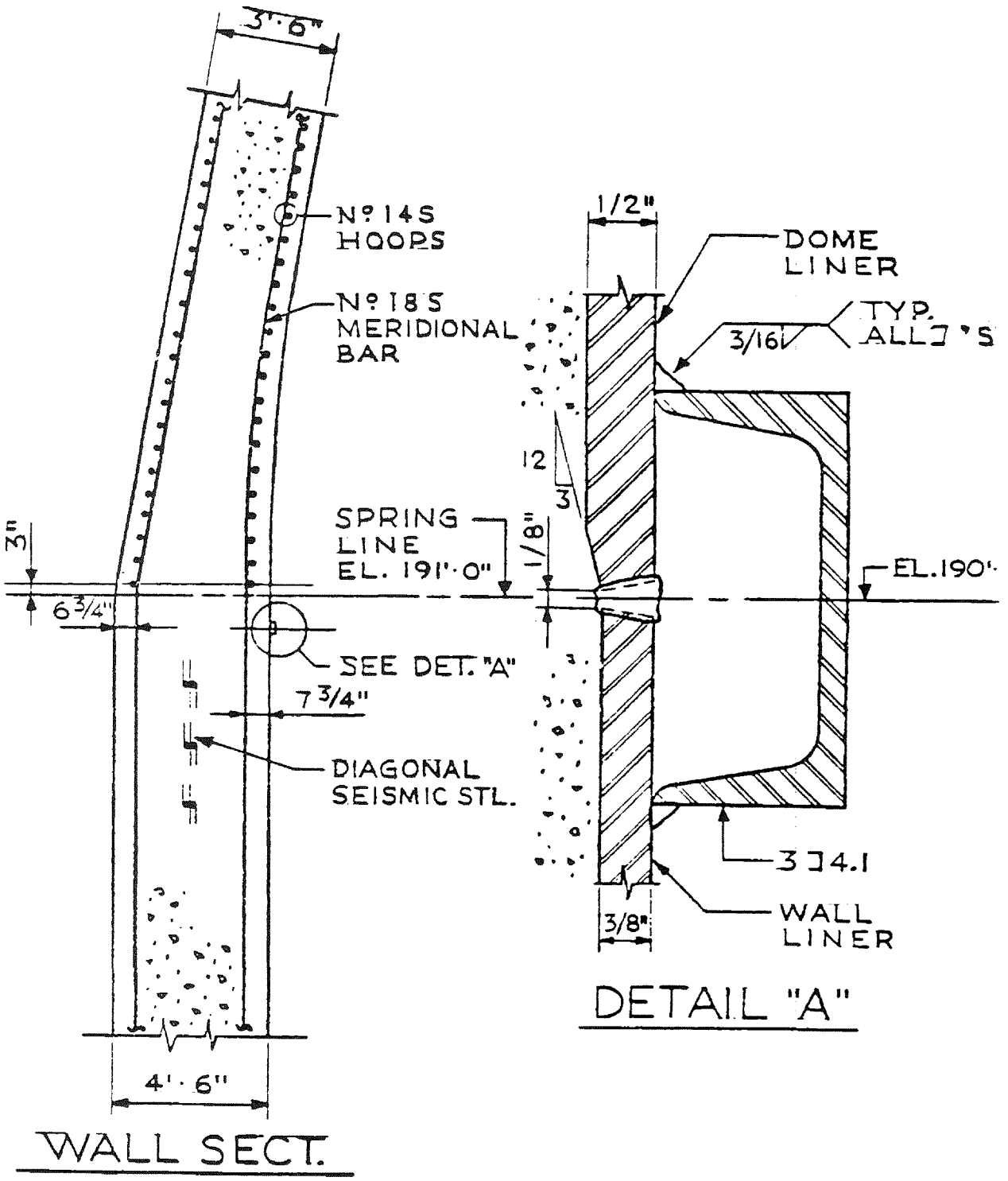

INDIAN POINT UNIT No. 2	
UFSAR FIGURE 5.1–20 WALL SECTION	
MIC. No. 1999MC3759	REV. No. 17A

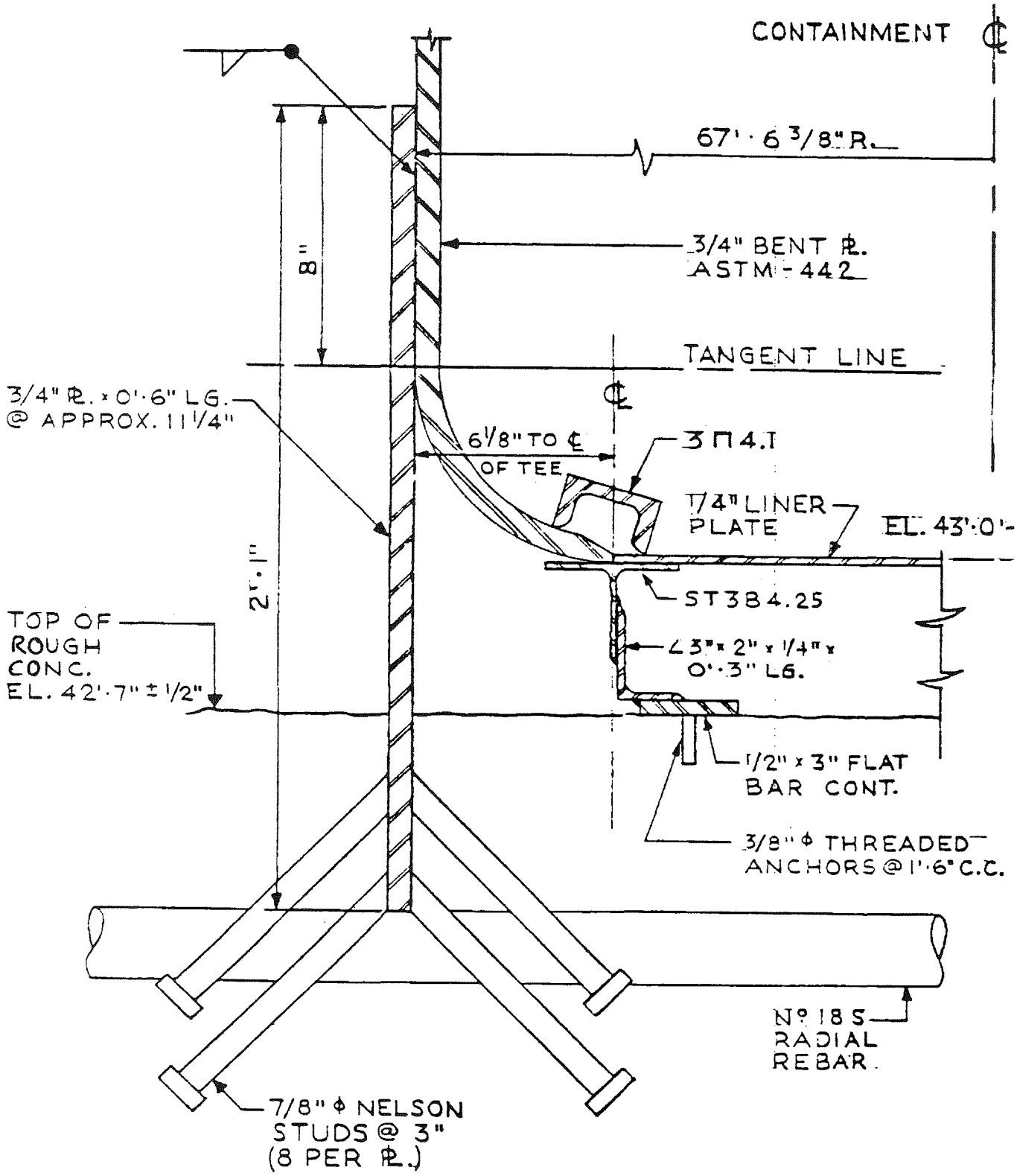

INDIAN POINT UNIT No. 2	
UFSAR FIGURE NO. 5.1-21 CYLINDER BASE SLAB LINER JUNCTURE	
MIC. No. 1999MC3760	REV. No. 17A

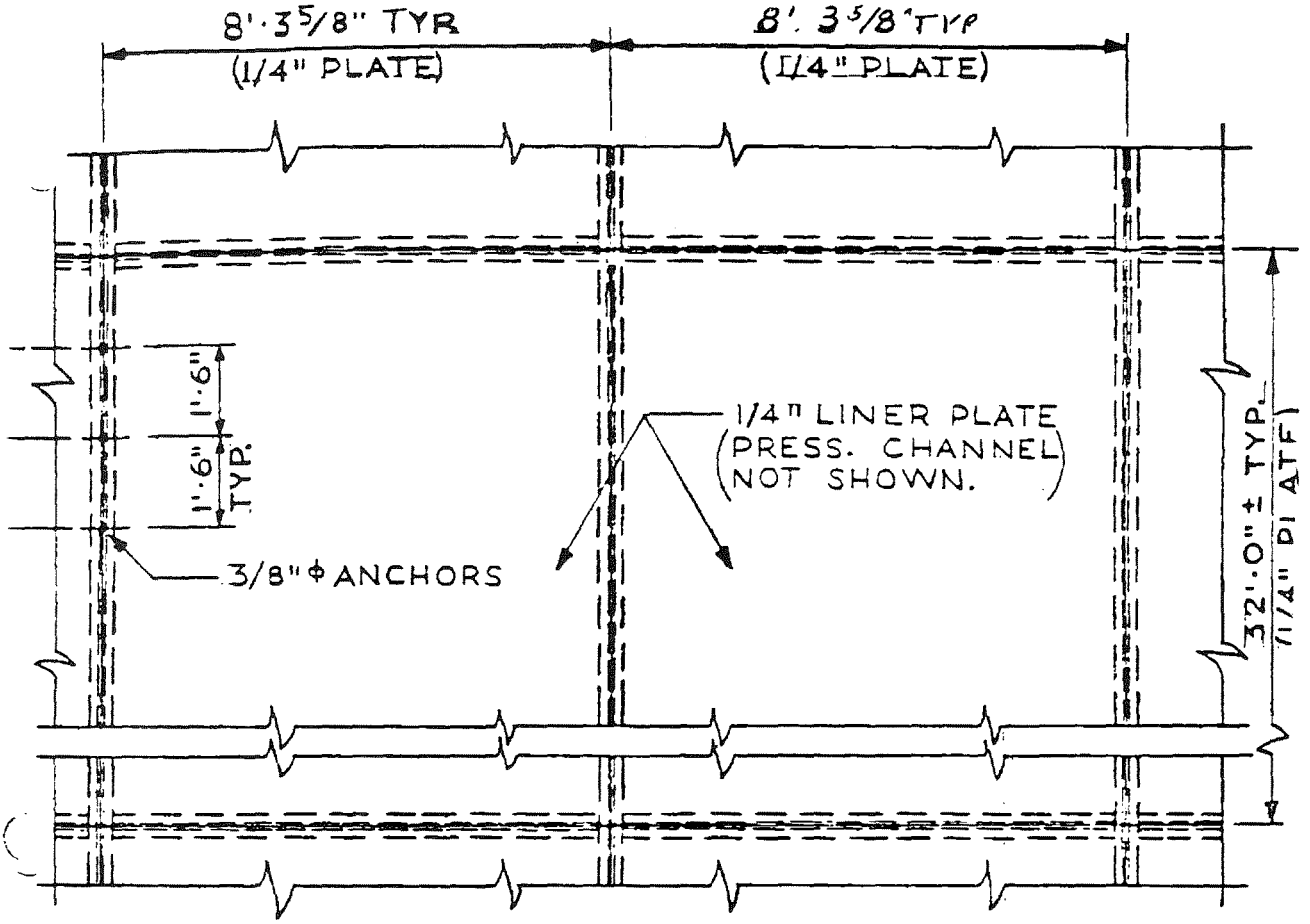

PLAN

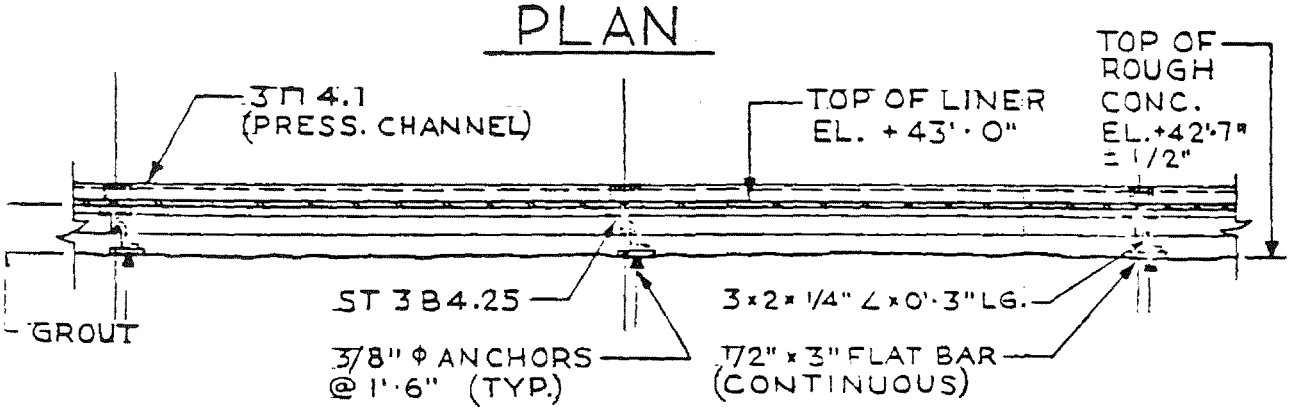

SECTION

INDIAN POINT UNIT No. 2	
UFSAR FIGURE 5.1-22 TYPICAL BASE MAT LINER DETAIL	
MIC. No. 1999MC3761	REV. No. 17A

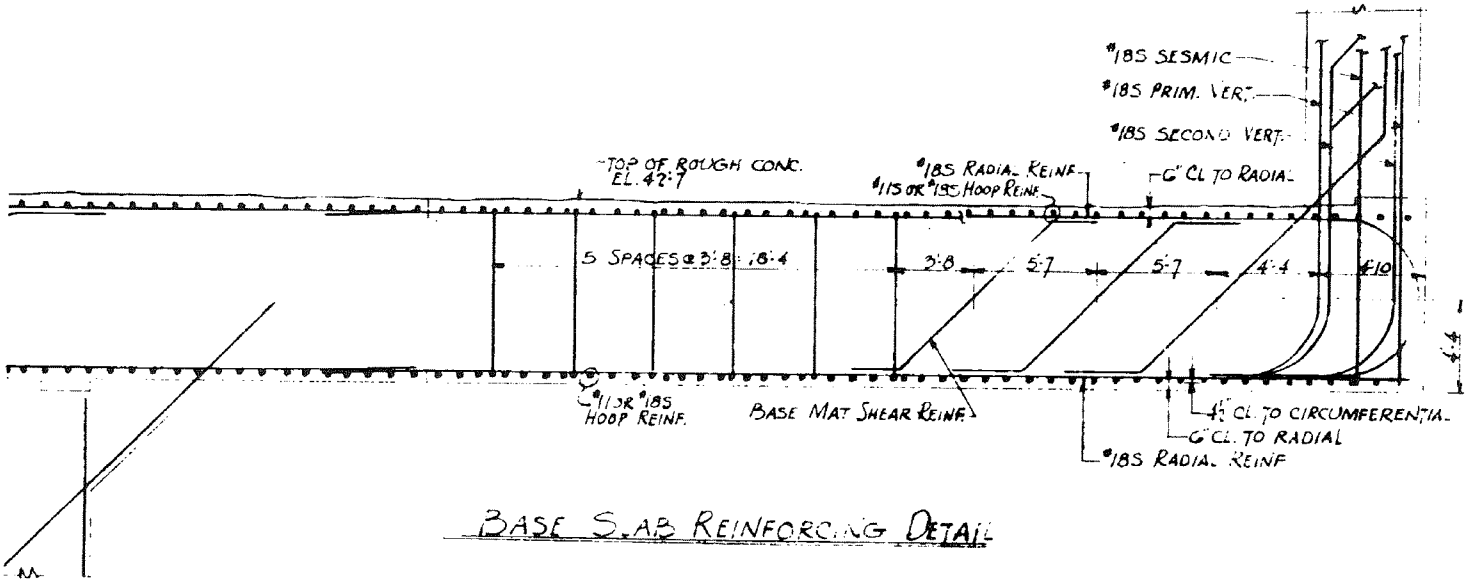

BASE SLAB REINFORCING DETAIL

INDIAN POINT UNIT No. 2	
UFSAR FIGURE 5.1–23 BASE SLAB REINFORCING DETAIL	
MIC. No. 1999MC3762	REV. No. 17A

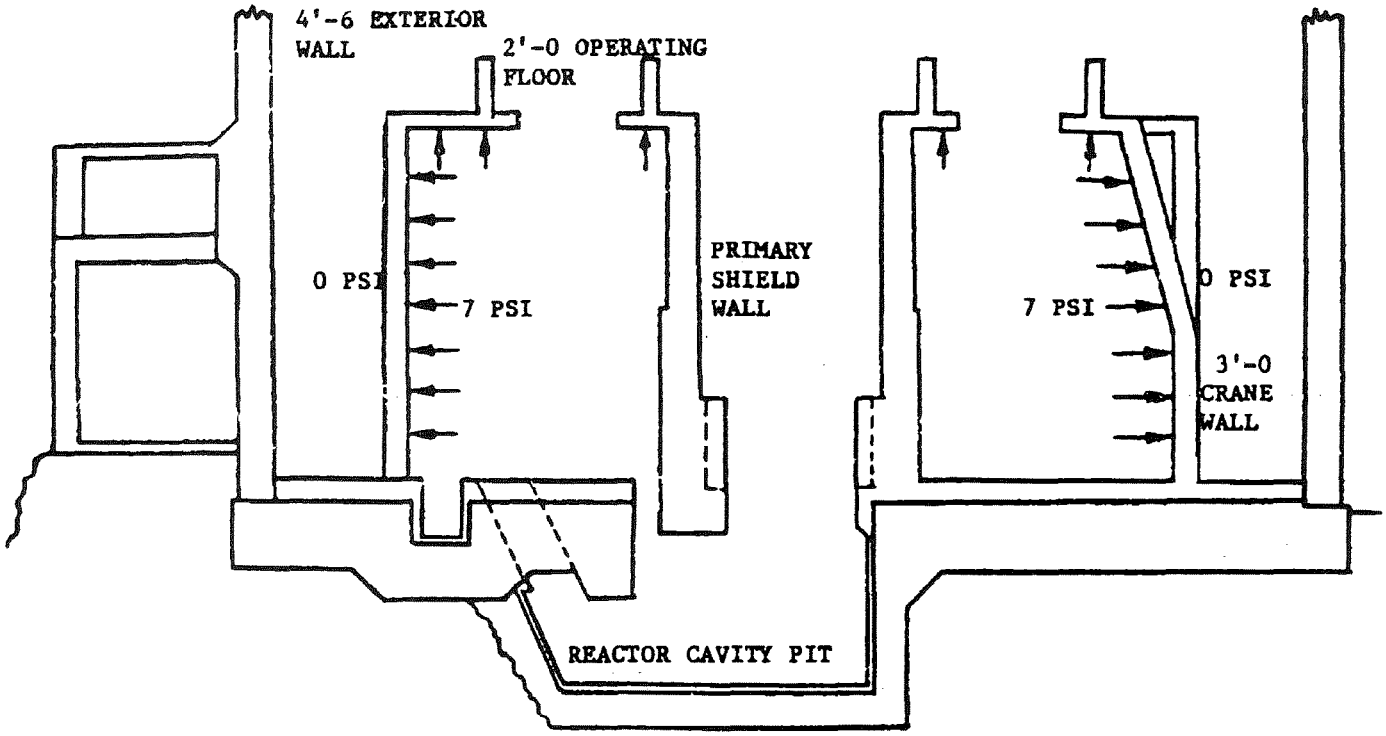

INDIAN POINT UNIT No. 2	
UFSAR FIGURE 5.1-24 REACTOR CAVITY PIT	
MIC. No. 1999MC3763	REV. No. 17A

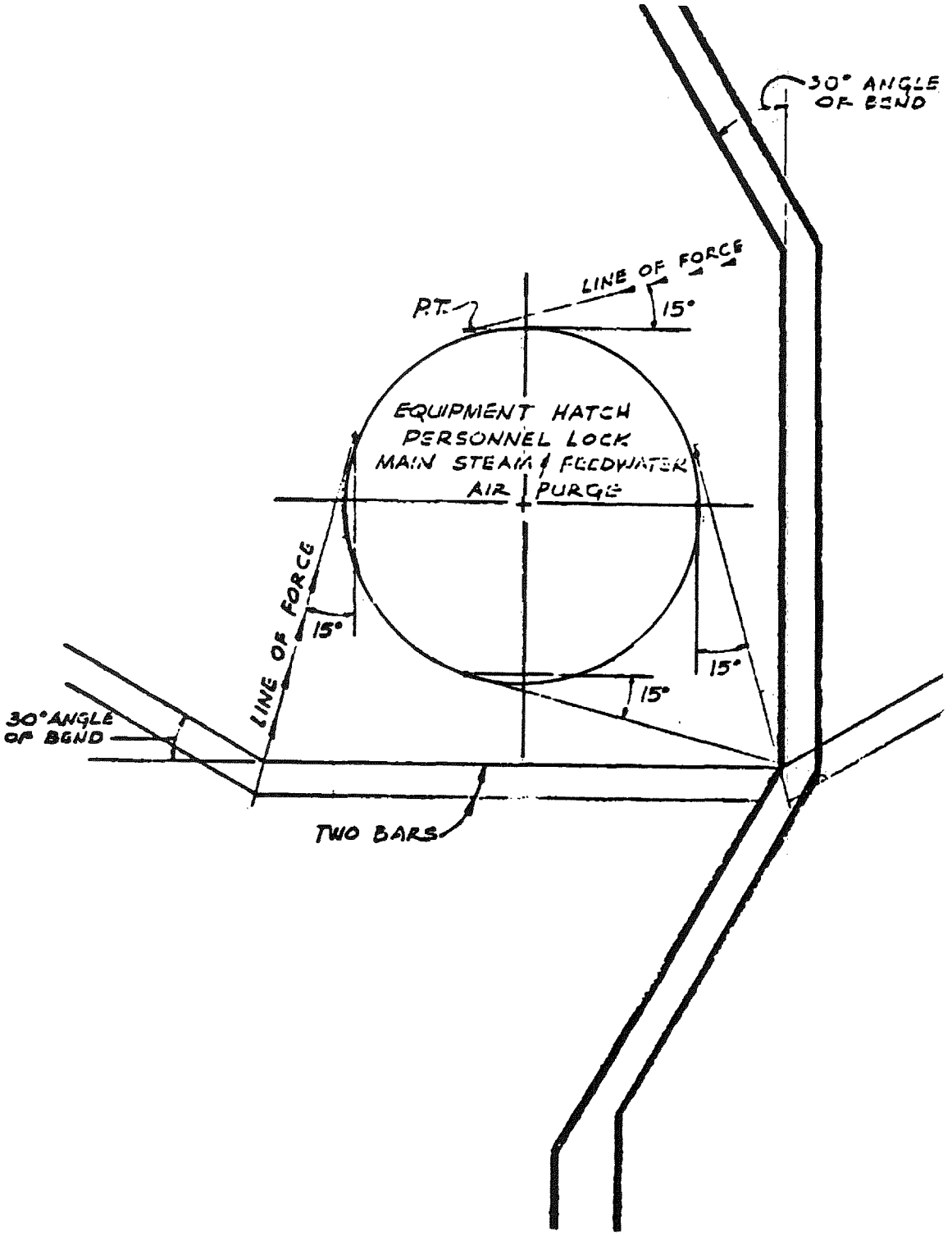

INDIAN POINT UNIT No. 2	
UFSAR FIGURE 5.1–25 EQUIPMENT HATCH PERSONNEL LOCK, MAIN STEAM AND FEEDWATER, AIR PURGE – REBAR	
MIC. No. 1999MC3764	REV. No. 17A

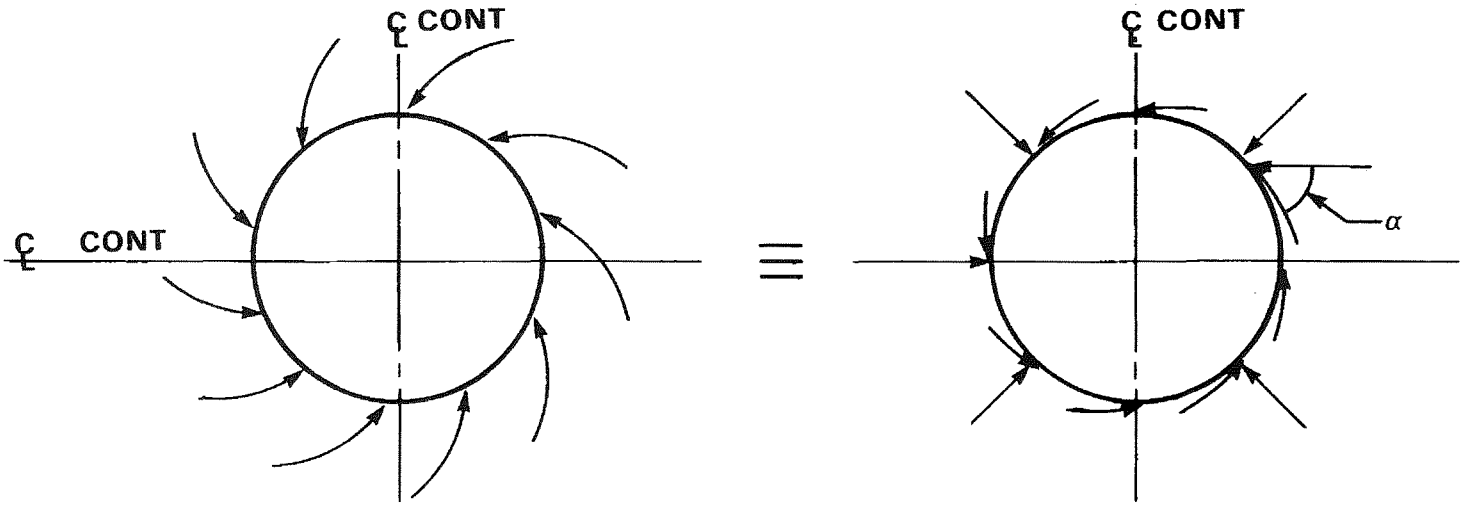

INDIAN POINT UNIT No. 2	
UFSAR FIGURE 5.1–26 TORSIONAL EFFECTS	
MIC. No. 1999MC3765	REV. No. 17A

THIS DWG. PERTAINS TO PENETRATIONS:

H11, 12, 13, 14, 15, 16, 17, 18, 19, 21, 22, 24, 26, 29, 31, 33, 34, 36, 37, 38, 39, 41, 42, 43, 44, 45, 47, 48, 49, 50, 51, 2, 53, 54, 55, 56, 57, 58, 59, 60, 61, 63, 64, 66, 67, 68, 69, 70 & 65.

NO	PART NAME	QY	DESCRIPTION
1	CONTAINER	1	STAINLESS STEEL
2	FLANGE	1	CARBON STEEL
3	FEEDER	2	STAINLESS STEEL
4	TUBE	2	STAINLESS STEEL
5	POTTING		SILICONE RUBBER
6	INSULATION		SILICONE SLEEVING
7	POTTING		EPOXY
8	SPACER	2	PHENOLIC
9	POTTING		SILICONE RUBBER
10	[illegible] TUBE	1	STAINLESS STEEL
11	IDENT. TAG		
12			

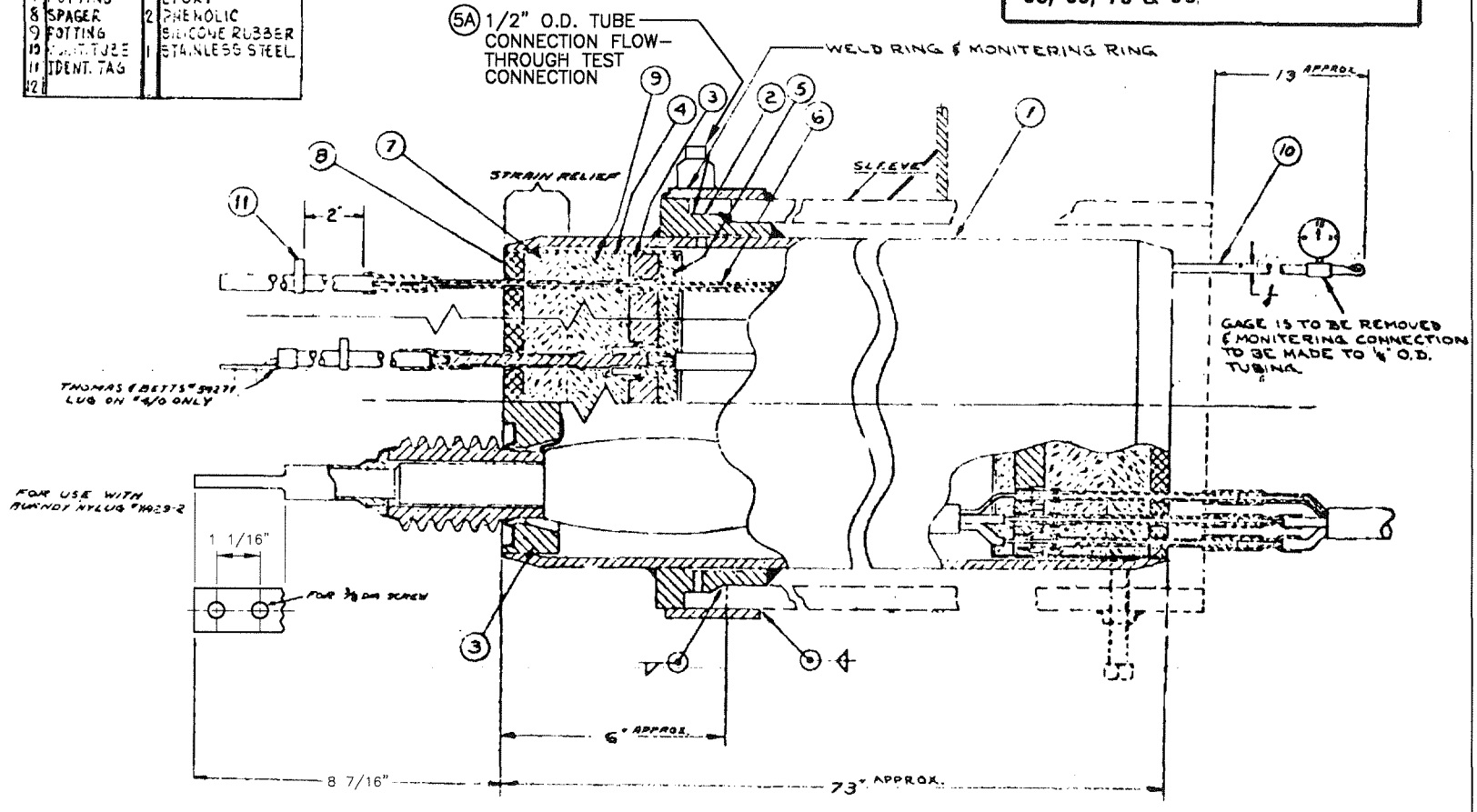

INDIAN POINT UNIT No. 2

UFSAR FIGURE 5.1-27

TYPICAL ELECTRICAL PENETRATION

MIC. No. 1999MC3766 | REV. No. 17A

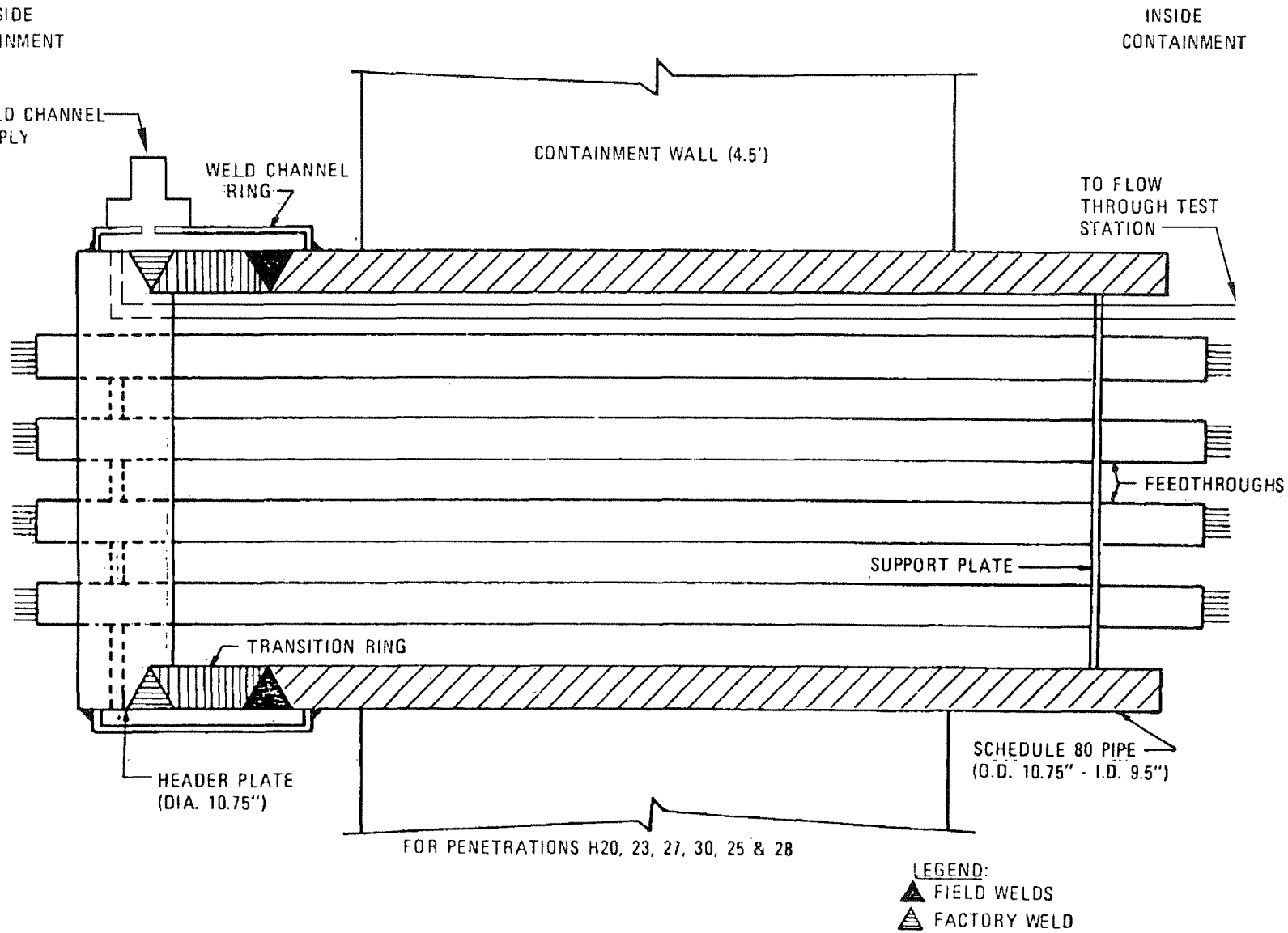

INDIAN POINT UNIT No. 2

UFSAR FIGURE 5.1-28

CONAX PENETRATIONS – OUTSIDE CONTAINMENT WELD

MIC. No. 1999MC3767 | REV. No. 17A

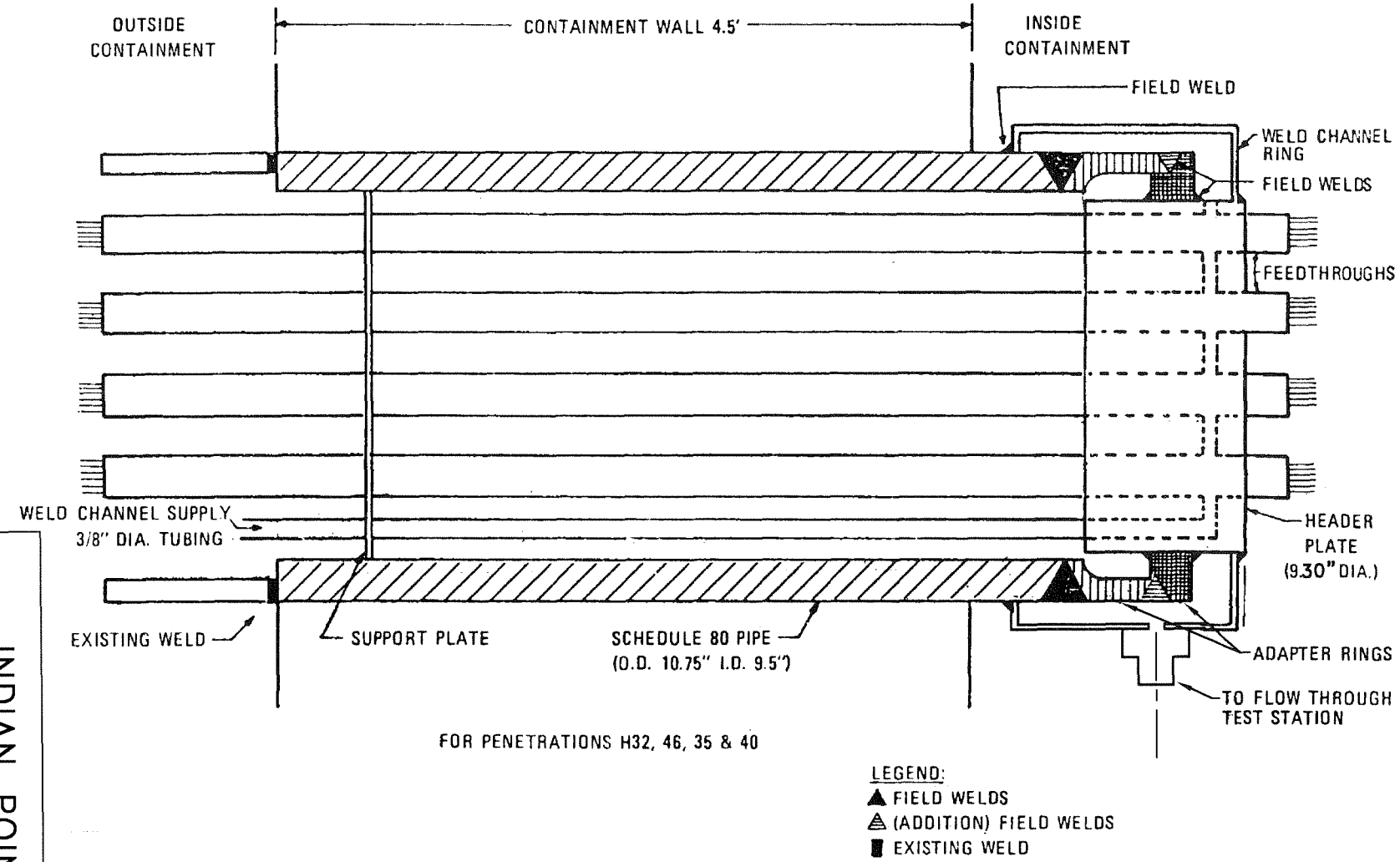

INDIAN POINT UNIT No. 2

UFSAR FIGURE 5.1-29

CONAX PENETRATIONS – INSIDE CONTAINMENT WELD

MIC. No. 1999MC3768 | REV. No. 17A

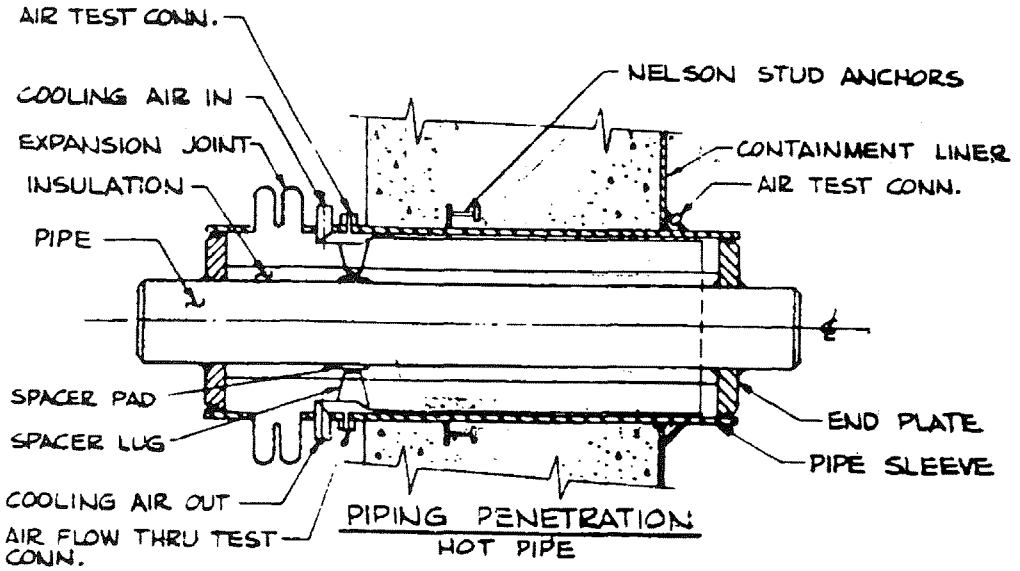

PIPING PENETRATION
HOT PIPE

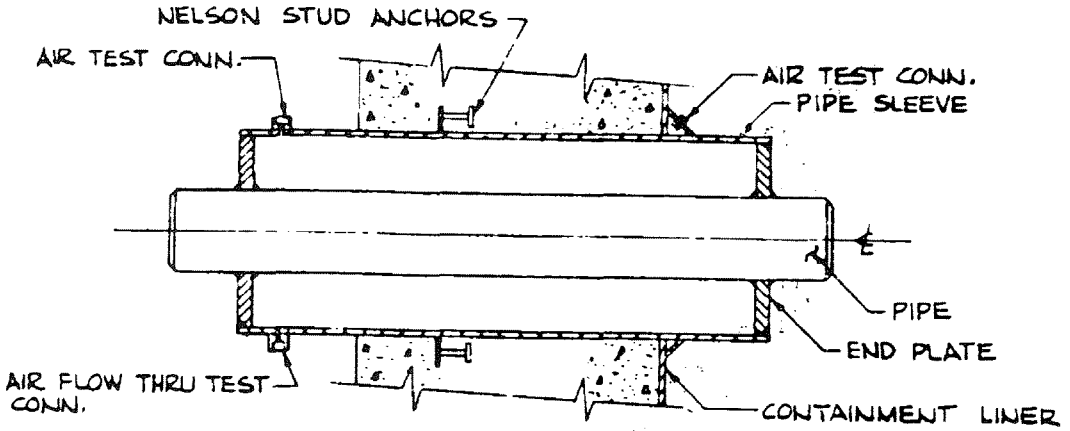

PIPING PENETRATION
COLD PIPE

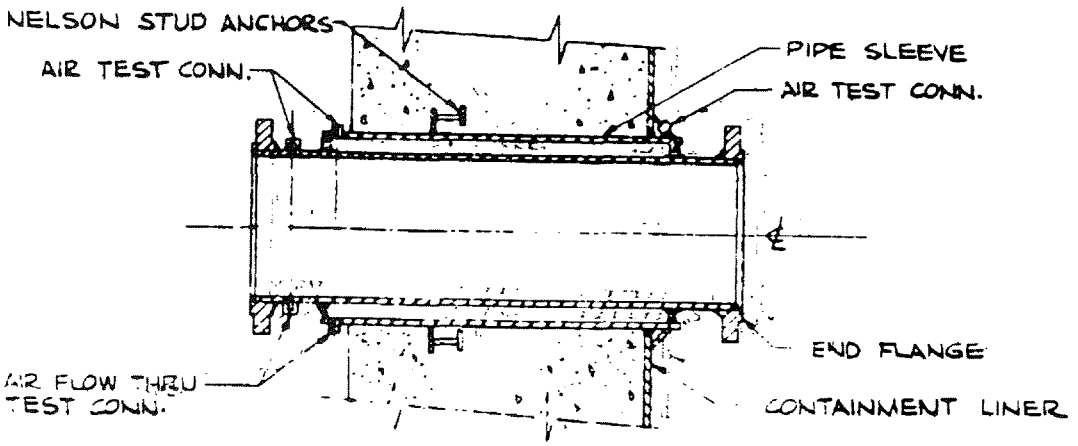

PIPE PENETRATION
PURGE PIPING

INDIAN POINT UNIT No. 2	
UFSAR FIGURE 5.1–30 TYPICAL PIPING PENETRATION	
MIC. No. 1999MC3769	REV. No. 17A

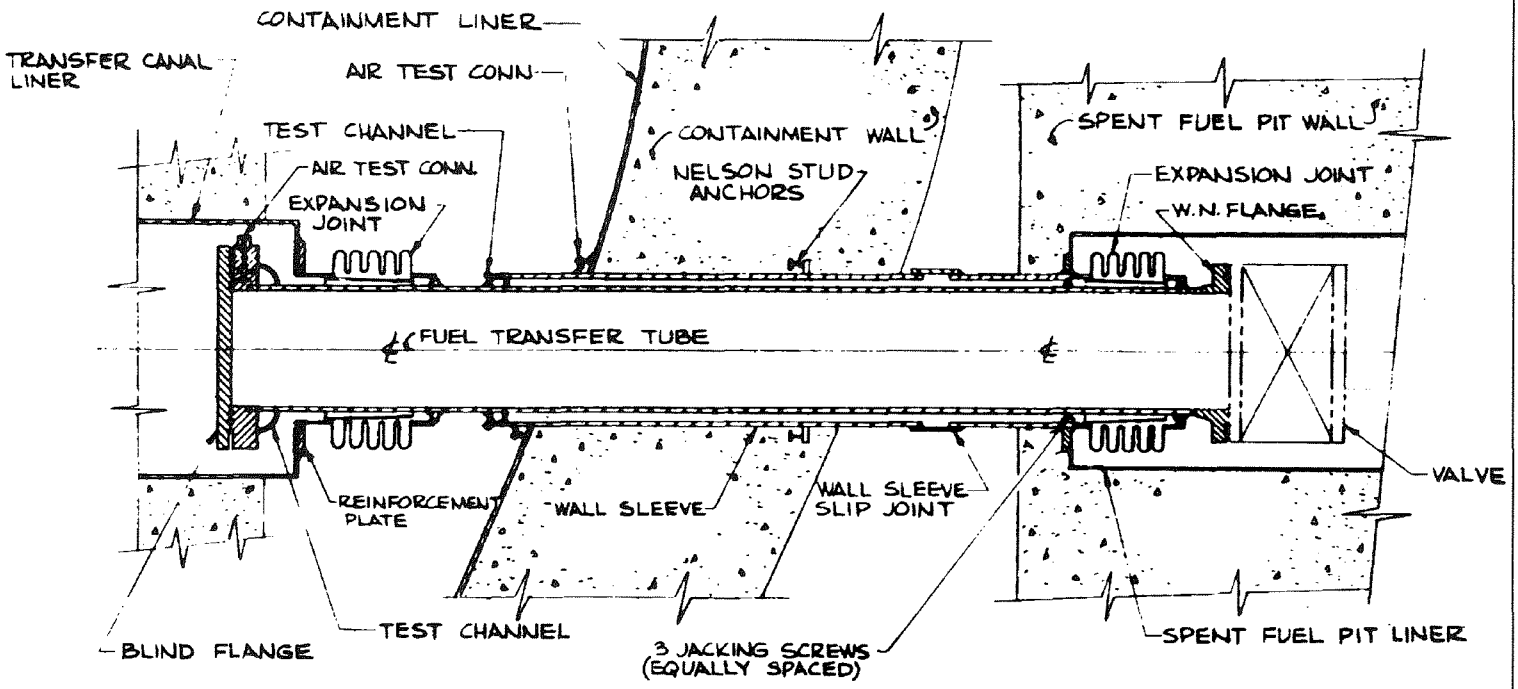

INDIAN POINT UNIT No. 2	
UFSAR FIGURE 5.1–31 FUEL TRANSFER TUBE PENETRATION (CONCEPTUAL DRAWING)	
MIC. No. 1999MC3770	REV. No. 17A

(Sample calculation)

FORM 501

GENERAL COMPUTATION SHEET
UNITED ENGINEERS & CONSTRUCTORS INC.

NAME OF COMPANY: CON EDISON - INDIAN POINT Nº 2 — J. O. NO. 9321-06 — SHEET NO. 6 OF — DATE

SUBJECT: CONTAINMENT - STRESSES ON PENETRATIONS & LINER — COMP. BY A.B.S. — CH'K'D BY F.X.M.

ELECTRICAL PENETRATIONS — EL. 57'-0 D.A = 10.75 SLEEVE t = .594

A) COMPRESSION N AND TENSION H RESTRAINT

$$S' = \frac{(70.5)(837)(12)}{(1000)\,24.96}(.43)$$

$= 12.2$ K/IN² TENSION

LINER A_s/FT $= (.75)(12) = 9.00$
SEISMIC HOOPS $4\,8(\frac{1}{10})(1.414) = 2.26$
$+16(\frac{1}{12}) = 13.70$
$\frac{13.70}{24.96}$ O'/FT

$S \cong 20.2$ K/IN² COMPRESSION

$$\Delta_{UN} = \frac{2}{3}\cdot\frac{5.375}{29\times10^3}\left[5(20.2) - 12.2\right] = 11.00\times10^{-3} = .011\times.5 = 0.0055$$

(radial deformation)

$$\lambda = \sqrt[4]{\frac{3(1-.25^2)}{(5.375^2)(.594)^2}} = .724$$

$$S_{SLEEVE} = \frac{(.0055)(29\times10^3)(.750)(.724)}{\left[(1-.25) + \underbrace{\frac{(.750)(5.375)(.724)}{2(.594)}}_{3.21}\right]2(.594)} = 0.225\times10^3 = \underline{\underline{22.5}}\ \text{KSI}$$

$$S_{LINER} = \frac{(.0055)(29\times10^3)}{5.375\left[(1-.25) + \underbrace{\frac{(.750)(5.375)(.724)}{2(.594)}}_{3.21}\right]} = .0093\times10^3 = \underline{\underline{9.3}}\ \text{KSI}$$

INDIAN POINT UNIT No. 2	
UFSAR FIGURE 5.1-32	
CONTAINMENT-STRESSES ON PENETRATIONS AND LINER - SHEET 6	
MIC. No. 1999MC3771	REV. No. 17A

(Sample calculation)

FORM 501

GENERAL COMPUTATION SHEET

UNITED ENGINEERS & CONSTRUCTORS INC.

NAME OF COMPANY: CON EDISON - INDIAN POINT #2 | J. O. NO. 9321-06 | SHEET NO. 7 OF | DATE

SUBJECT: CONTAINMENT - STRESSES ON PENETRATIONS & LINER | COMP. BY B.B.S. | C'K'D BY [illegible]

ELECTRICAL PENETRATIONS

8) TENSION V & TENSION H

$S = 12.2\ ^{K}/_{in^2}$

$S' = \frac{297}{27.26} = 10.9\ ^{K}/_{in^2}$

	AD/FT (V)
LINER	.75(12) = 9
VERTICAL BARS	4 x 4 = 16
SEISMIC	8(13/30)(1.414) = 2.26
	27.26

$$\Delta_{UN} = \frac{2}{3} \cdot \frac{5.375}{29 \times 10^3} \left[5(12.2) + 10.9 \right] \quad (71.9)$$

$$\Delta_{UN} = \frac{71.9}{88.8} \times .011 = .0089$$

$$S_{SLEEVE} = \frac{71.9}{88.8} \times 22.9 = \underline{\underline{18.2}}\ ^{KSI}$$

$$S_{LINER} = \frac{71.9}{88.8} \times 9.3 = \underline{\underline{7.52}}\ ^{KSI}$$

INDIAN POINT UNIT No. 2	
UFSAR FIGURE 5.1-33	
CONTAINMENT-STRESSES ON PENETRATIONS AND LINER - SHEET 7	
MIC. No. 1999MC3772	REV. No. 17A

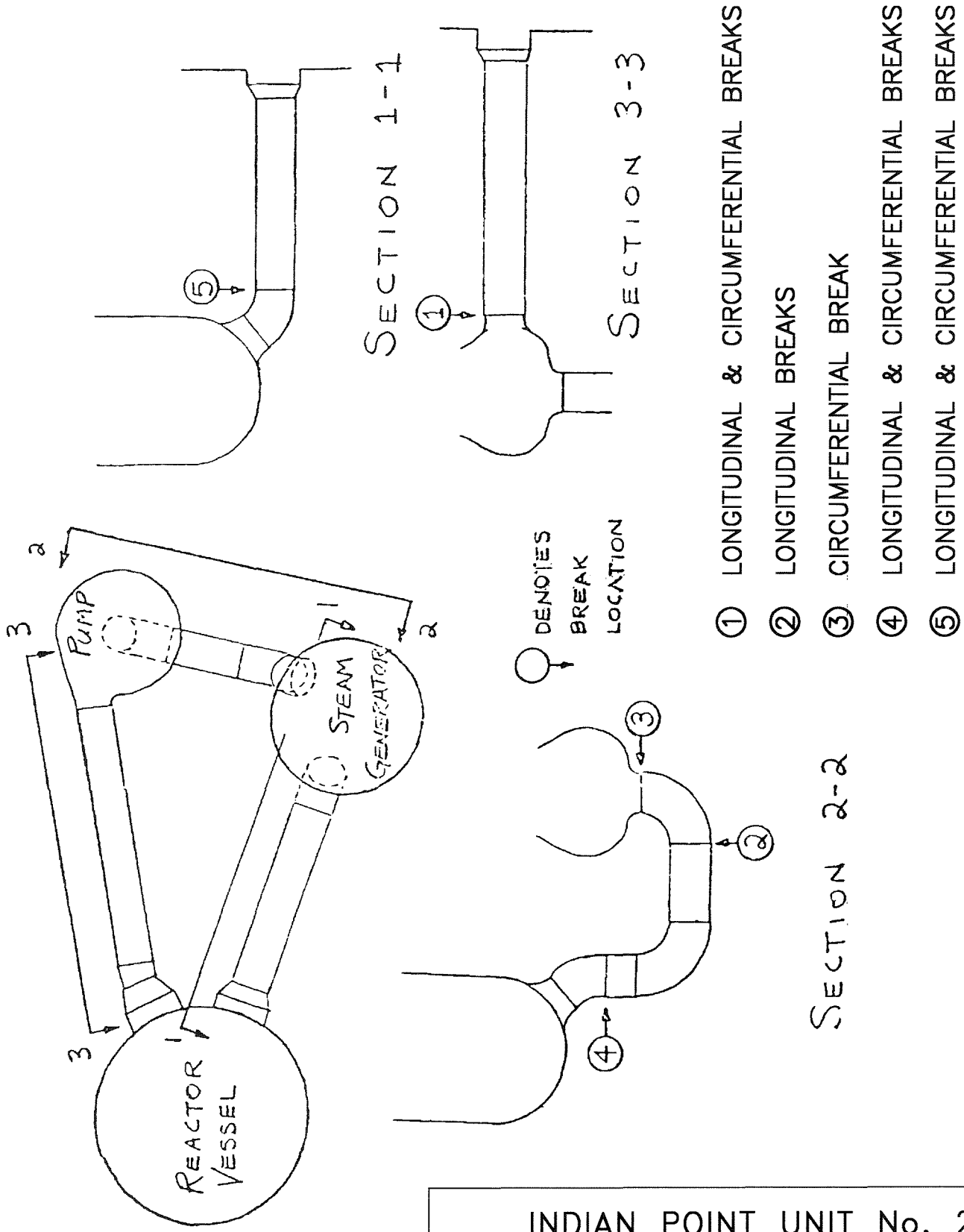

(THIS FIGURE DEPICTS ORIGINAL HISTORICAL DESIGN DATA AND DOES NOT REFLECT THE CURRENT CONFIGURATION OR ANALYSIS.)

INDIAN POINT UNIT No. 2	
UFSAR FIGURE 5.1–34 ASSUMED PIPE RUPTURE ACCIDENT BREAK LOCATIONS	
MIC. No. 1999MC3773	REV. No. 17A

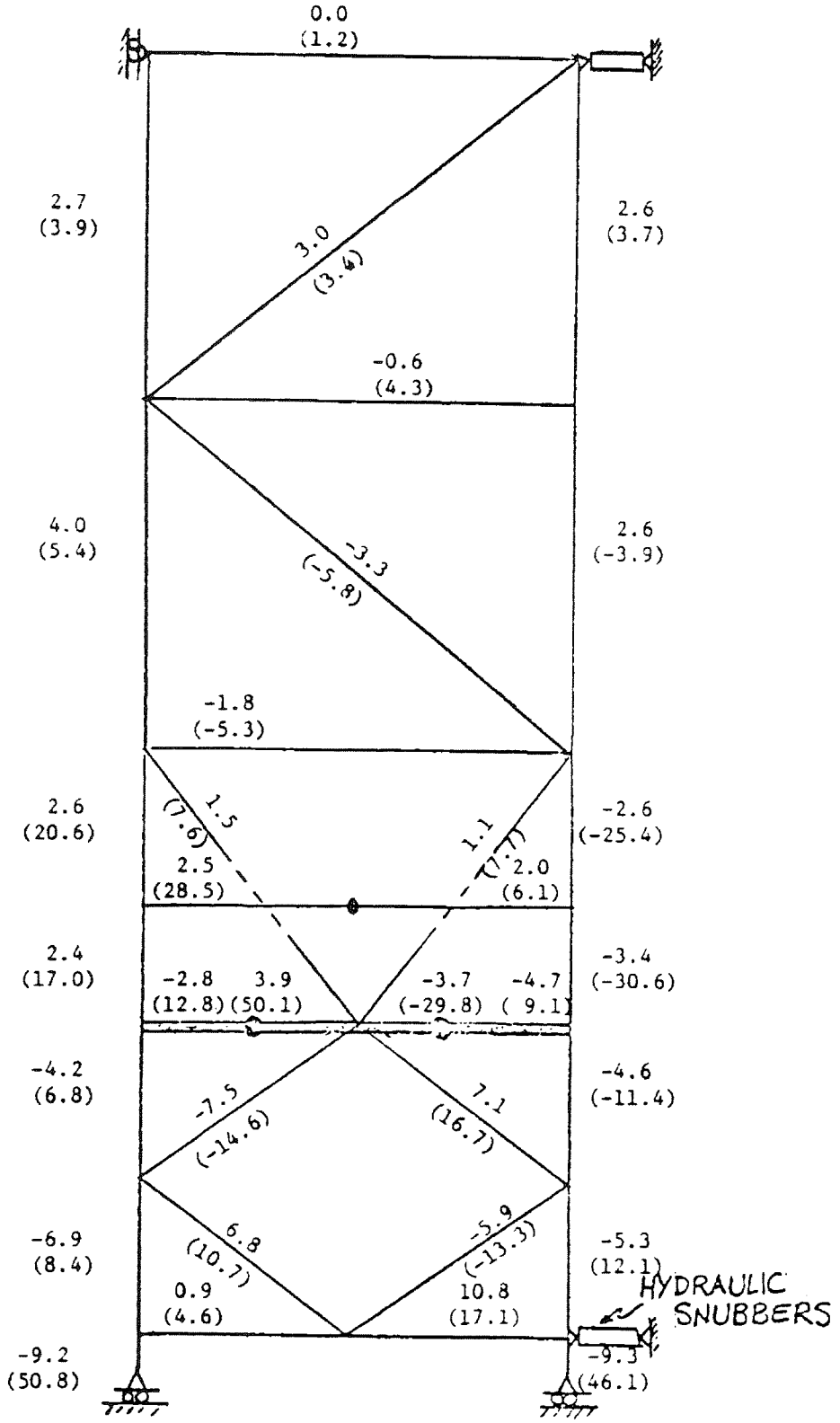

For Section location,
see Figure 5.1–43

(THIS FIGURE DEPICTS ORIGINAL HISTORICAL DESIGN DATA AND DOES NOT REFLECT THE CURRENT CONFIGURATION OR ANALYSIS.)

INDIAN POINT UNIT No. 2	
UFSAR FIGURE 5.1–35 STEAM GENERATOR SUPPORT–SECTION 1–1	
MIC. No. 1999MC3774	REV. No. 17A

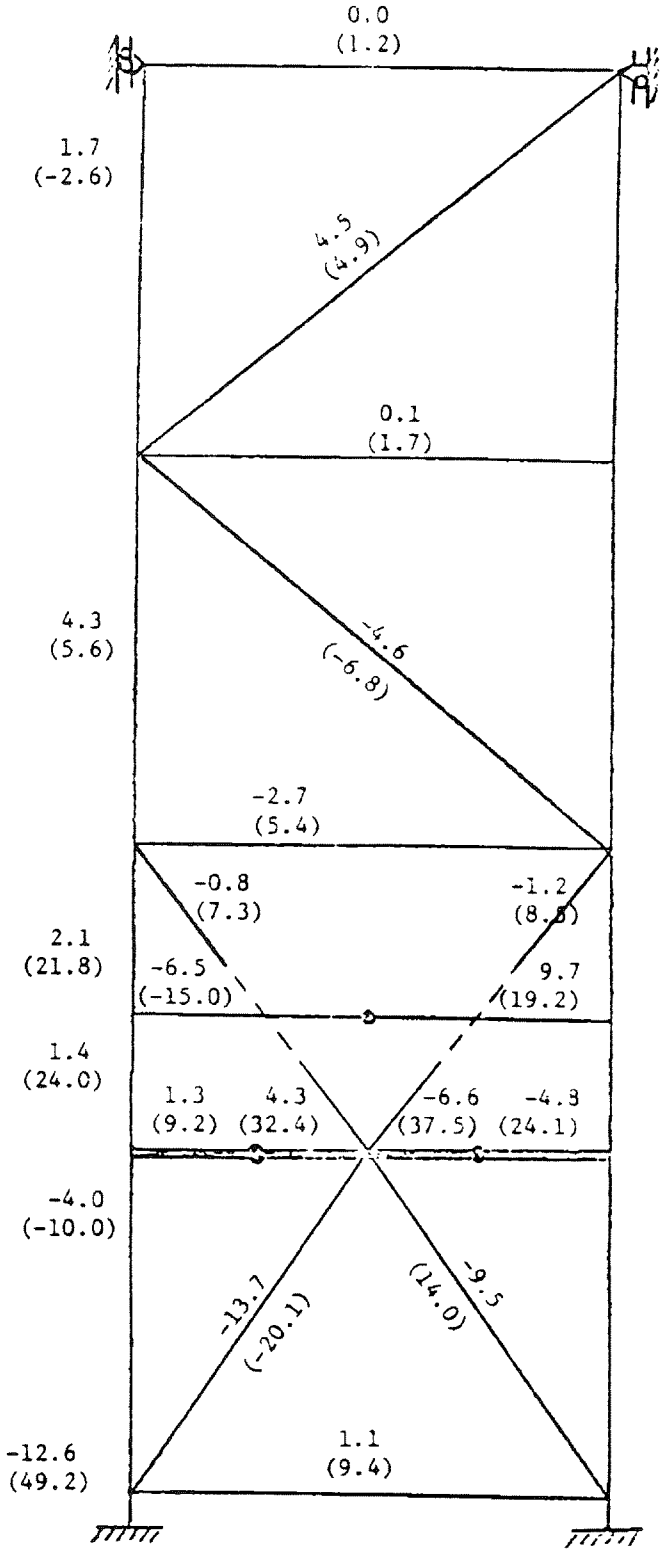

For Section location, see Figure 5.1–43

(THIS FIGURE DEPICTS ORIGINAL HISTORICAL DESIGN DATA AND DOES NOT REFLECT THE CURRENT CONFIGURATION OR ANALYSIS.)

INDIAN POINT UNIT No. 2	
UFSAR FIGURE 5.1–36 STEAM GENERATOR SUPPORT–SECTION 2–2	
MIC. No. 1999MC3775	REV. No. 17A

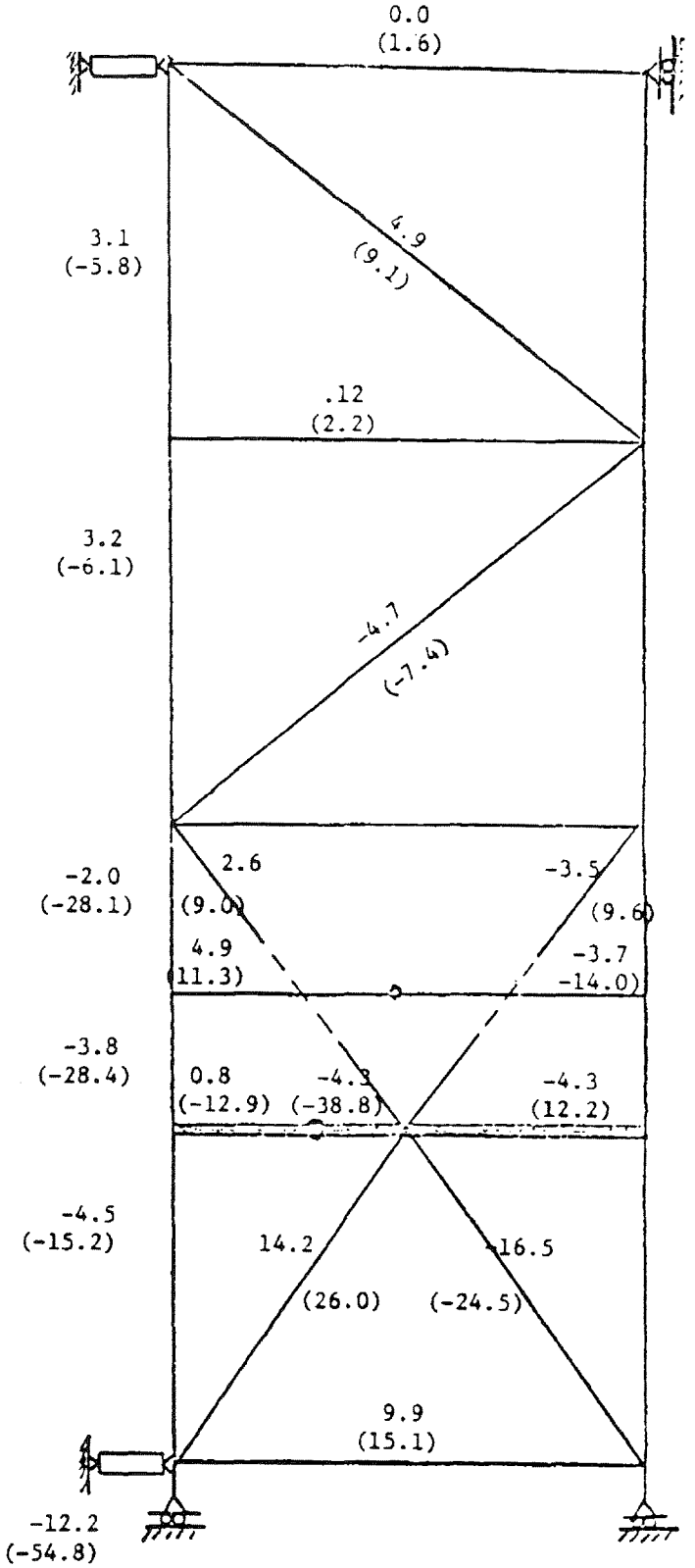

For Section location, see Figure 5.1–43

(THIS FIGURE DEPICTS ORIGINAL HISTORICAL DESIGN DATA AND DOES NOT REFLECT THE CURRENT CONFIGURATION OR ANALYSIS.)

INDIAN POINT UNIT No. 2	
UFSAR FIGURE 5.1–37 STEAM GENERATOR SUPPORT–SECTION 3–3	
MIC. No. 1999MC3776	REV. No. 17A

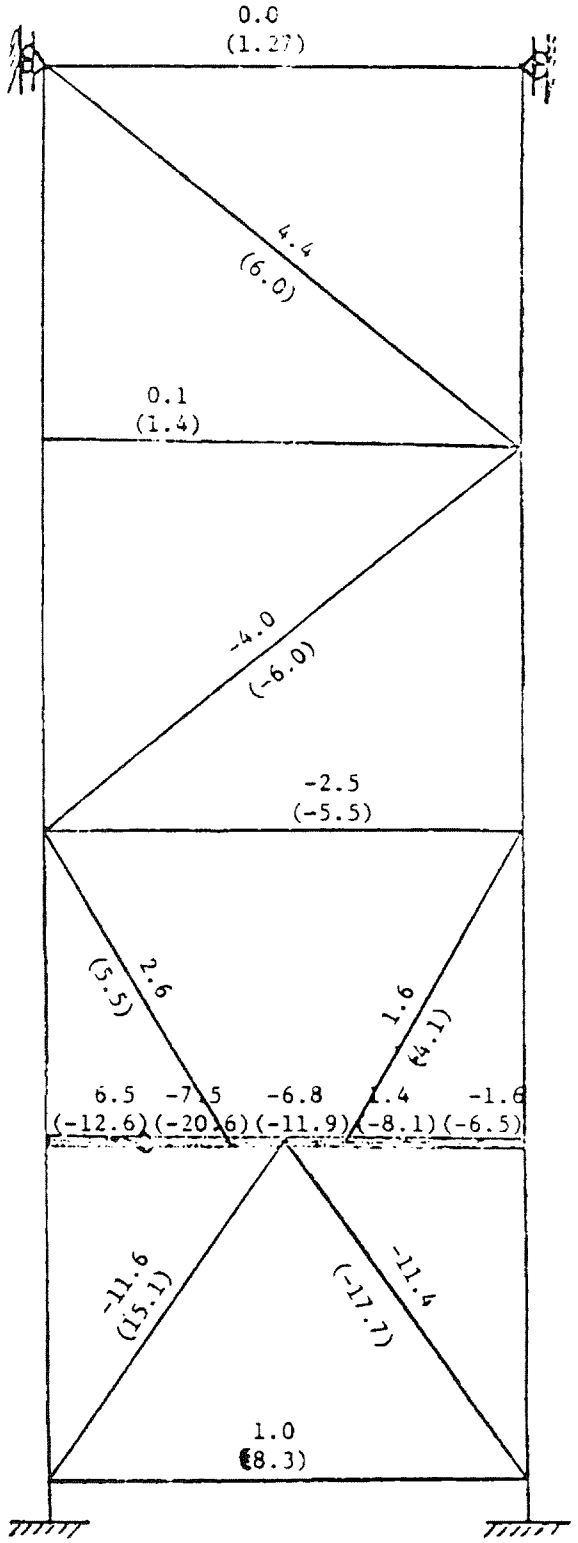

For Section location, see Figure 5.1–43

(THIS FIGURE DEPICTS ORIGINAL HISTORICAL DESIGN DATA AND DOES NOT REFLECT THE CURRENT CONFIGURATION OR ANALYSIS.)

INDIAN POINT UNIT No. 2	
UFSAR FIGURE 5.1–38 STEAM GENERATOR SUPPORT–SECTION 4–4	
MIC. No. 1999MC3777	REV. No. 17A

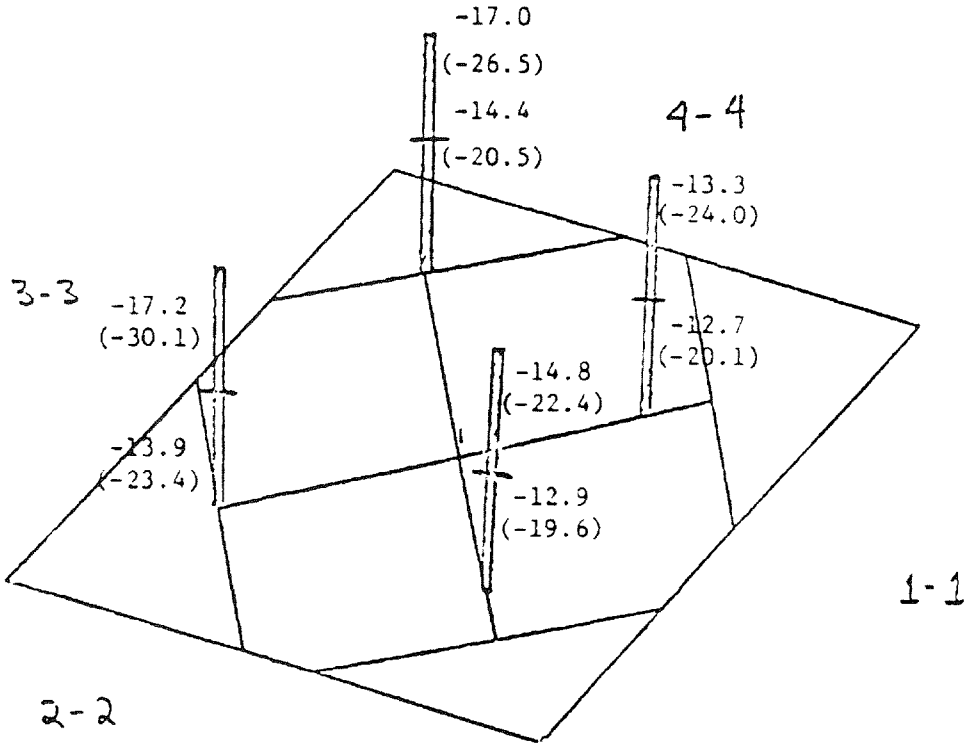

PLAN AT EL. 60'-0"

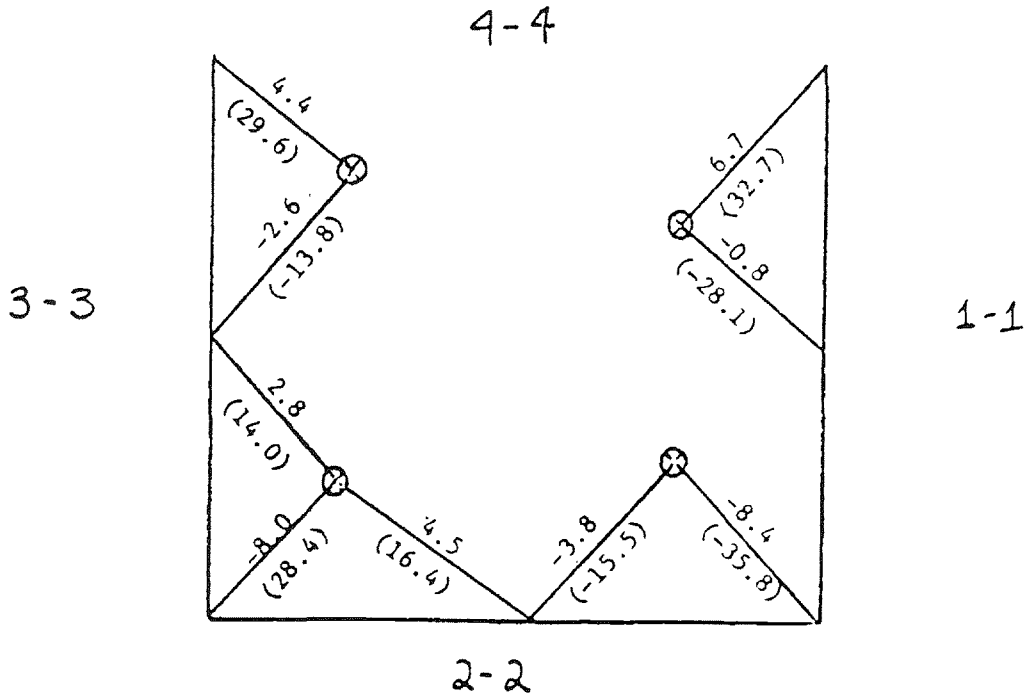

PLAN AT EL. 63'-0"

For Section location, see Figure 5.1–44

(THIS FIGURE DEPICTS ORIGINAL HISTORICAL DESIGN DATA AND DOES NOT REFLECT THE CURRENT CONFIGURATION OR ANALYSIS.)

INDIAN POINT UNIT No. 2	
UFSAR FIGURE 5.1–39 STEAM GENERATOR SUPPORT–PLAN LOCATION ELEVATION 60 AND 63	
MIC. No. 1999MC3778	REV. No. 17A

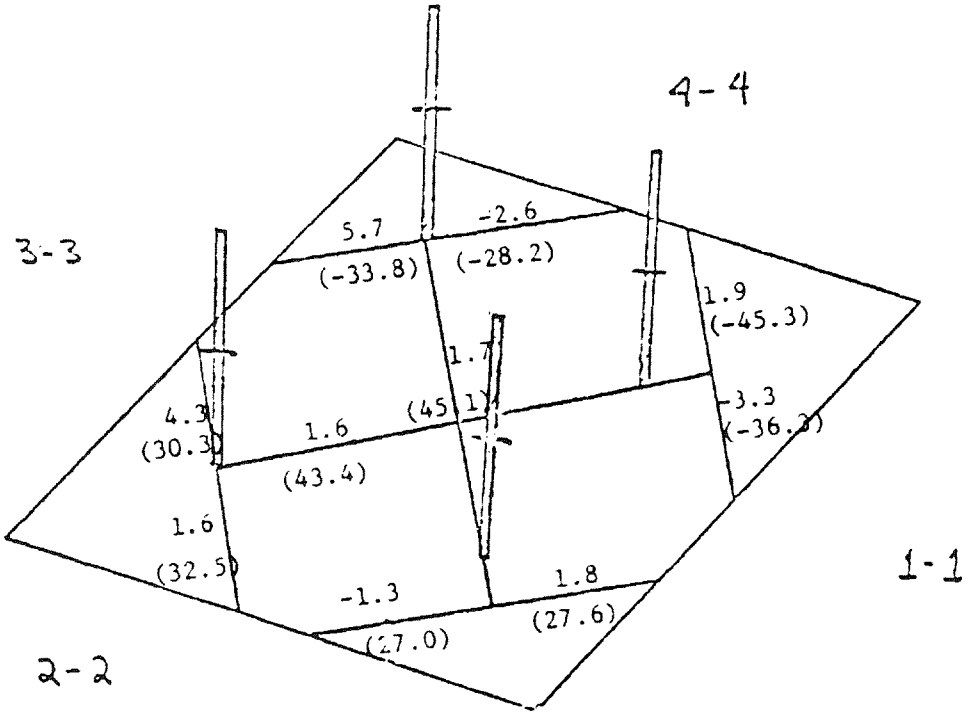

PLAN AT EL. 60'-0"

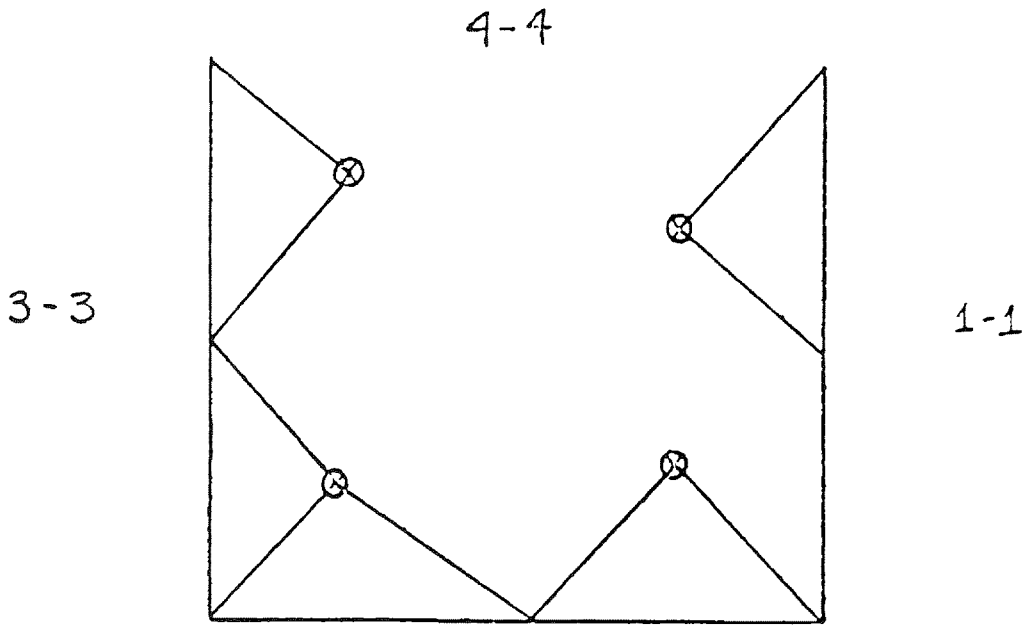

PLAN AT EL. 63'-0"

(THIS FIGURE DEPICTS ORIGINAL HISTORICAL DESIGN DATA AND DOES NOT REFLECT THE CURRENT CONFIGURATION OR ANALYSIS.)

INDIAN POINT UNIT No. 2	
UFSAR FIGURE 5.1–40 STEAM GENERATOR SUPPORT–PLAN LOCATION ELEVATION 60 AND 63	
MIC. No. 1999MC3779	REV. No. 17A

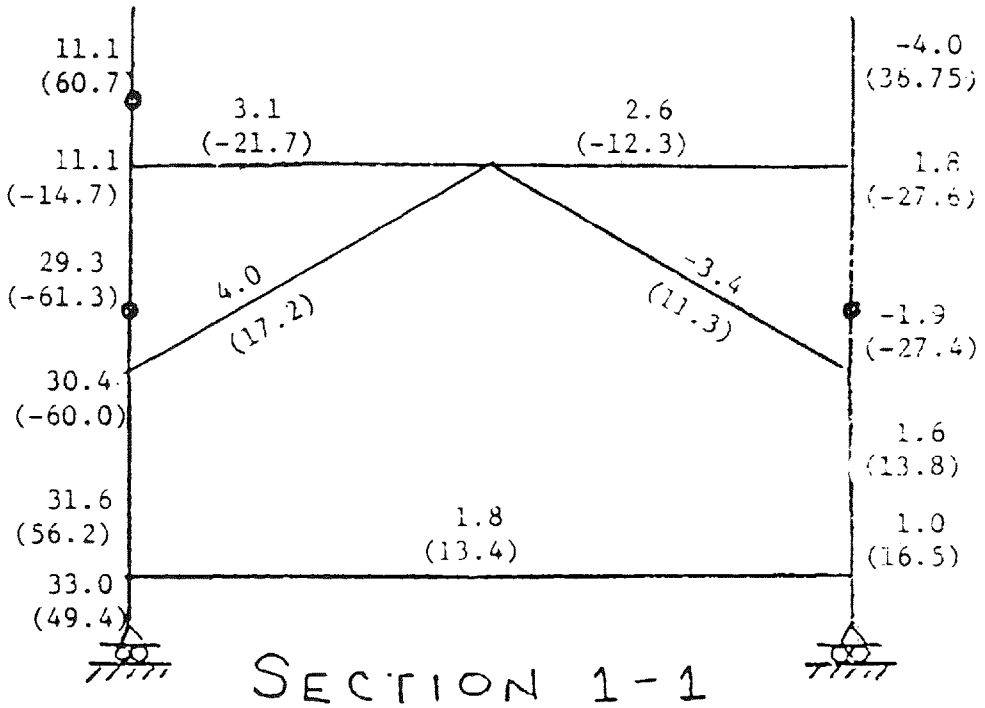

SECTION 1-1

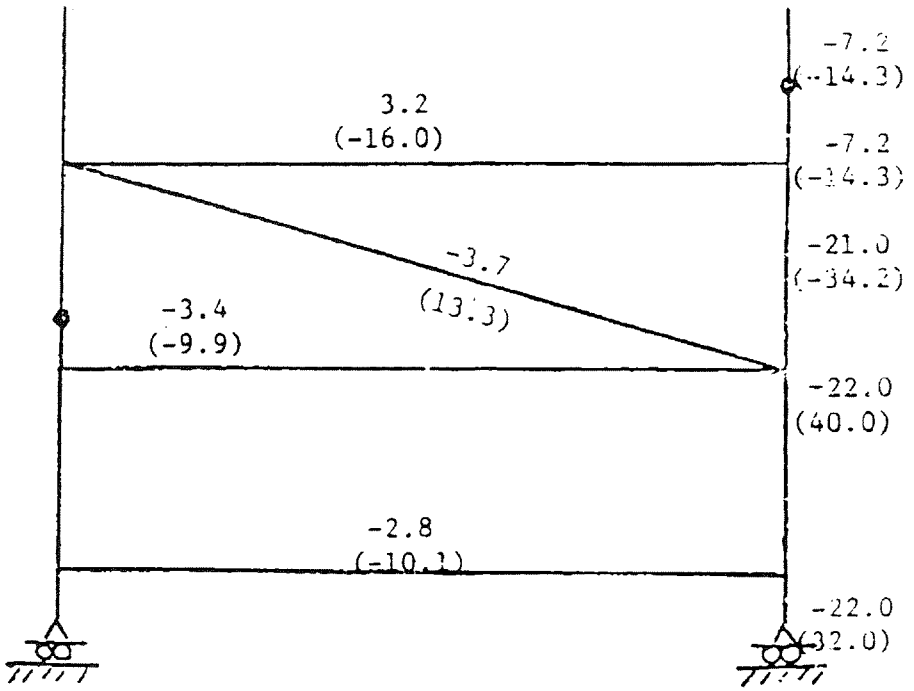

SECTION 2-2

For Section location, see Figure 5.1–44

(THIS FIGURE DEPICTS ORIGINAL HISTORICAL DESIGN DATA AND DOES NOT REFLECT THE CURRENT CONFIGURATION OR ANALYSIS.)

INDIAN POINT UNIT No. 2	
UFSAR FIGURE 5.1–41 PUMP SUPPORT–SECTION 2–2 AND 3–3	
MIC. No. 1999MC3780	REV. No. 17A

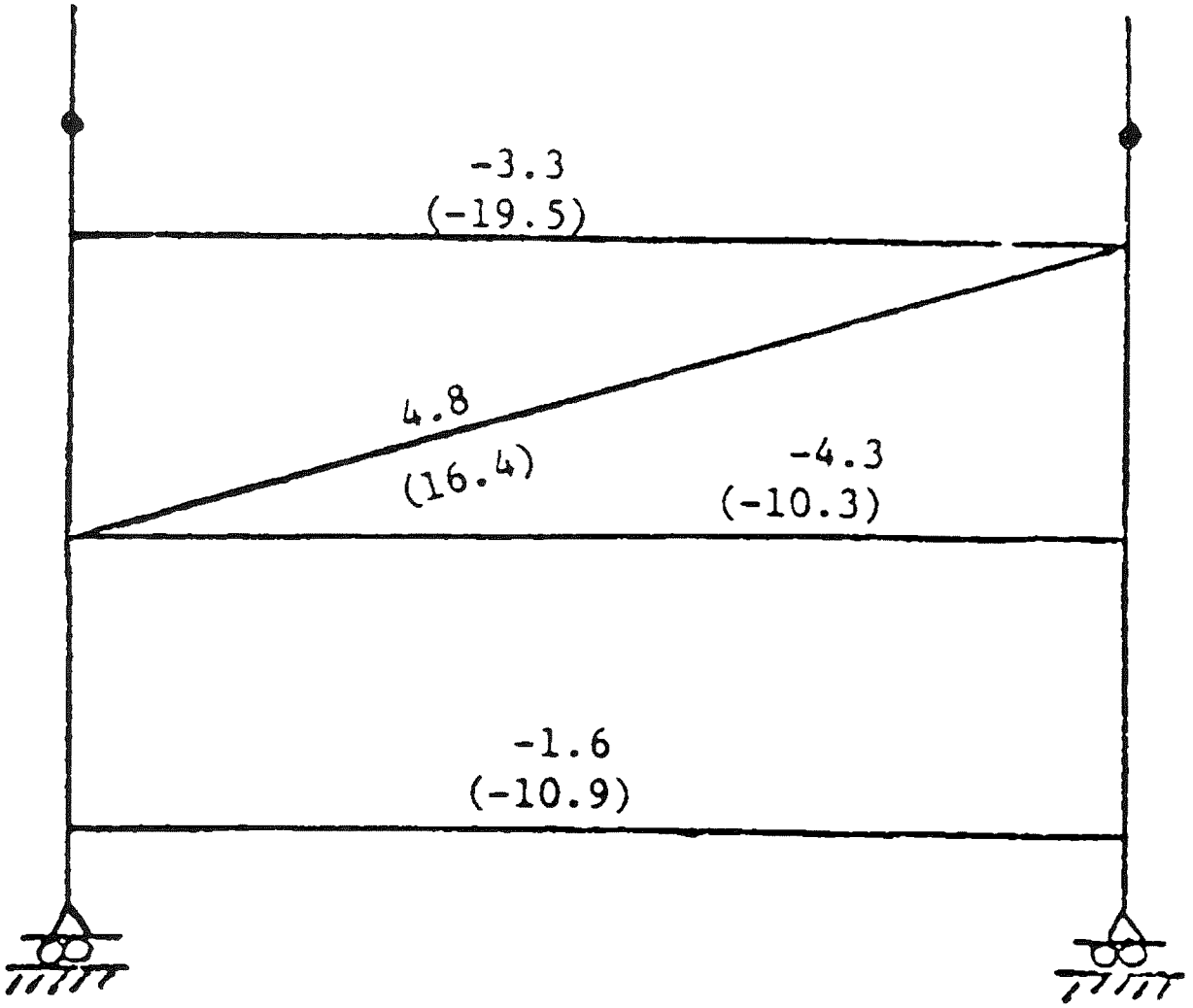

For Section location,
see Figure 5.1-44

(THIS FIGURE DEPICTS ORIGINAL HISTORICAL DESIGN DATA AND DOES NOT REFLECT THE CURRENT CONFIGURATION OR ANALYSIS.)

INDIAN POINT UNIT No. 2	
UFSAR FIGURE 5.1-42 PUMP SUPPORT-SECTION 3-3	
MIC. No. 1999MC3781	REV. No. 17A

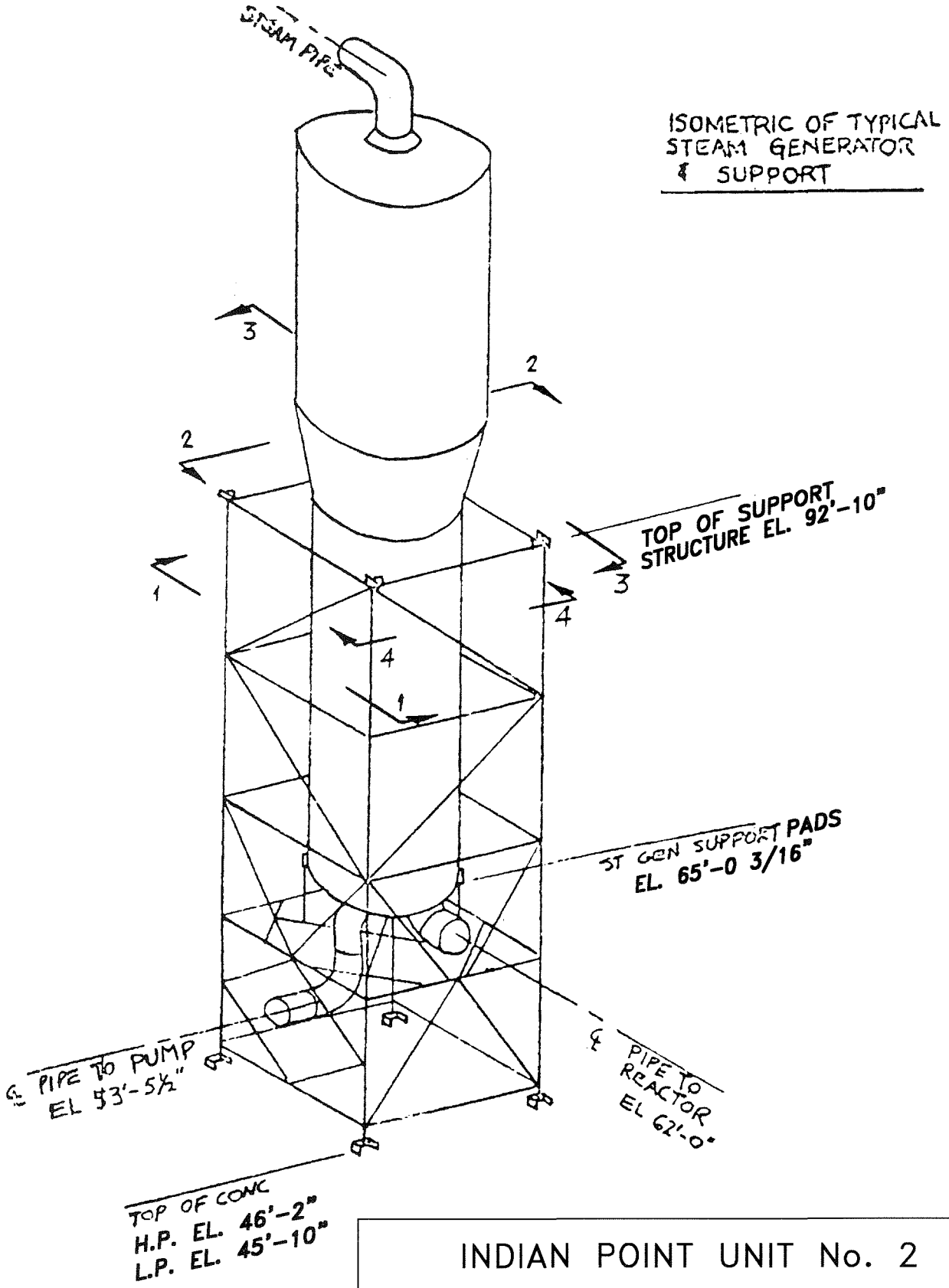

INDIAN POINT UNIT No. 2	
UFSAR FIGURE 5.1-43 ISOMETRIC VIEW-STEAM GENERATOR SUPPORT	
MIC. No. 1999MC3782	REV. No. 17A

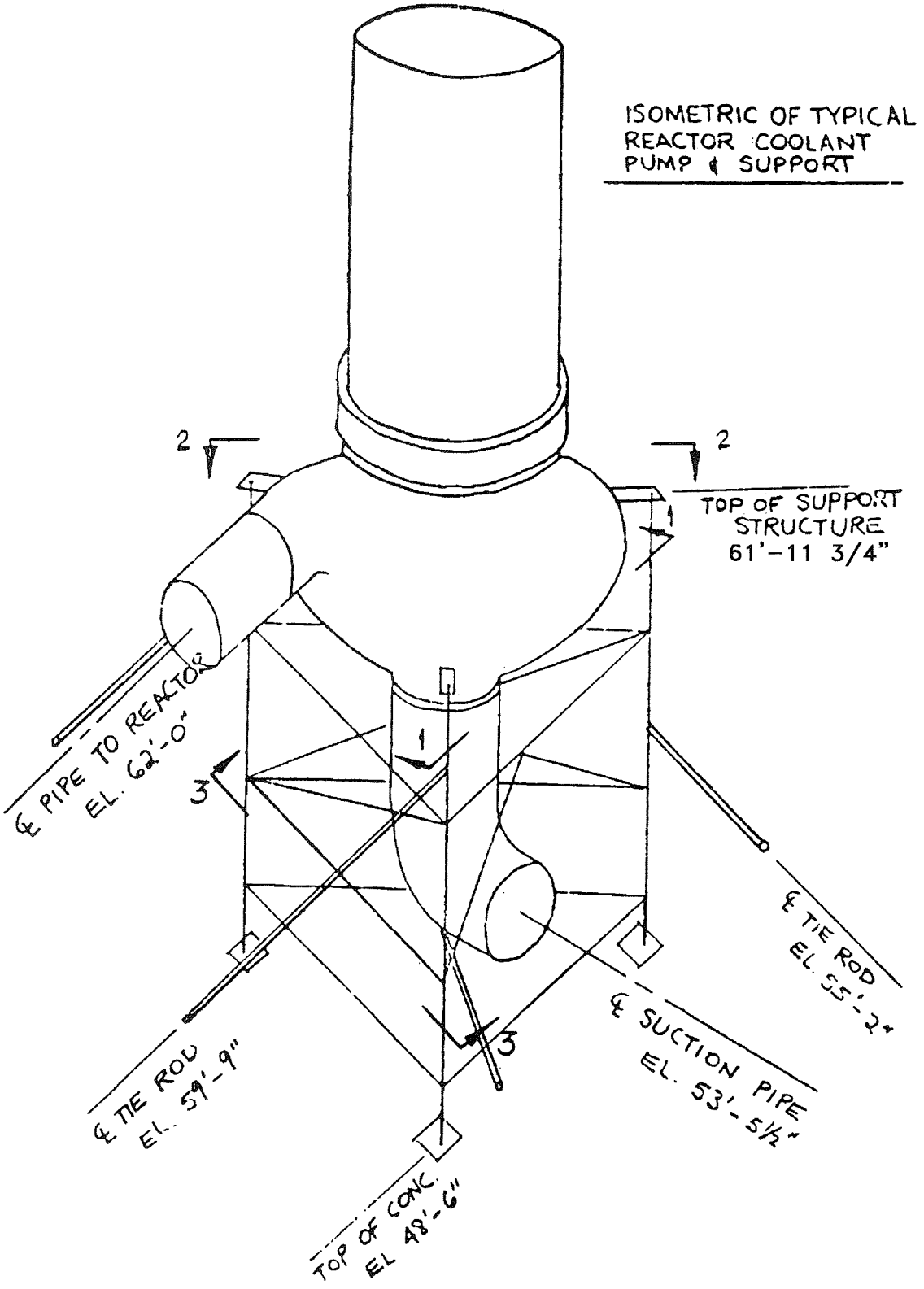

INDIAN POINT UNIT No. 2	
UFSAR FIGURE 5.1-44 ISOMETRIC VIEW-REACTOR COOLANT PUMP SUPPORT	
MIC. No. 1999MC3783	REV. No. 17A

MAXIMUM FORCES
ACTING ON A REACTOR
VESSEL SUPPORT

	A	B	C	D	Σ		
	REACTOR VESSEL WEIGHT & PIPING REACTION	PIPE BREAK CASE II	PIPE BREAK CASE III	EARTH-QUAKE Z & VERTICAL DIRECTION	A+B	A+C	A+D
P (lb)	934,000	-	525,000	395,000	934,000	1,459,000	1,329,000
R (lb)	322,000	-	-	-	322,000	322,000	322,000
T (lb)	140,000	1,187,000	710,000	969,000	1,327,000	850,000	1,109,000

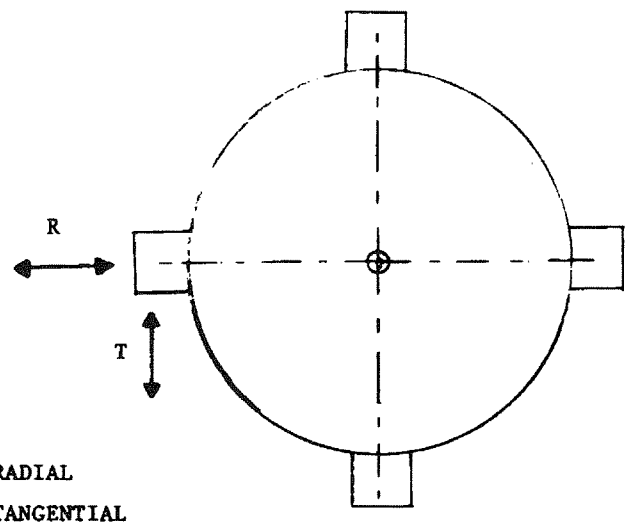

PIPE BREAK CASE II IS BETWEEN PUMP AND ELL ON REACTOR NOZZLE

PIPE BREAK CASE III IS AT STEAM GENERATOR INLET

EARTHQUAKE IN Z DIRECTION ACTS NORMAL TO REACTOR COOLANT OUTLET LINE

R-RADIAL

T-TANGENTIAL

P-VERTICAL

PLAN

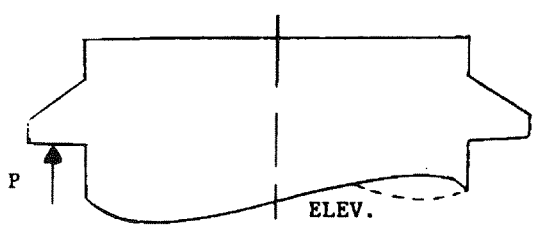

(THIS FIGURE DEPICTS ORIGINAL HISTORICAL DESIGN DATA AND DOES NOT REFLECT THE CURRENT CONFIGURATION OR ANALYSIS.)

INDIAN POINT UNIT No. 2

UFSAR FIGURE 5.1-45

MAXIMUM FORCES ACTING ON A REACTOR VESSEL SUPPORT

MIC. No. 1999MC3784 | REV. No. 17A

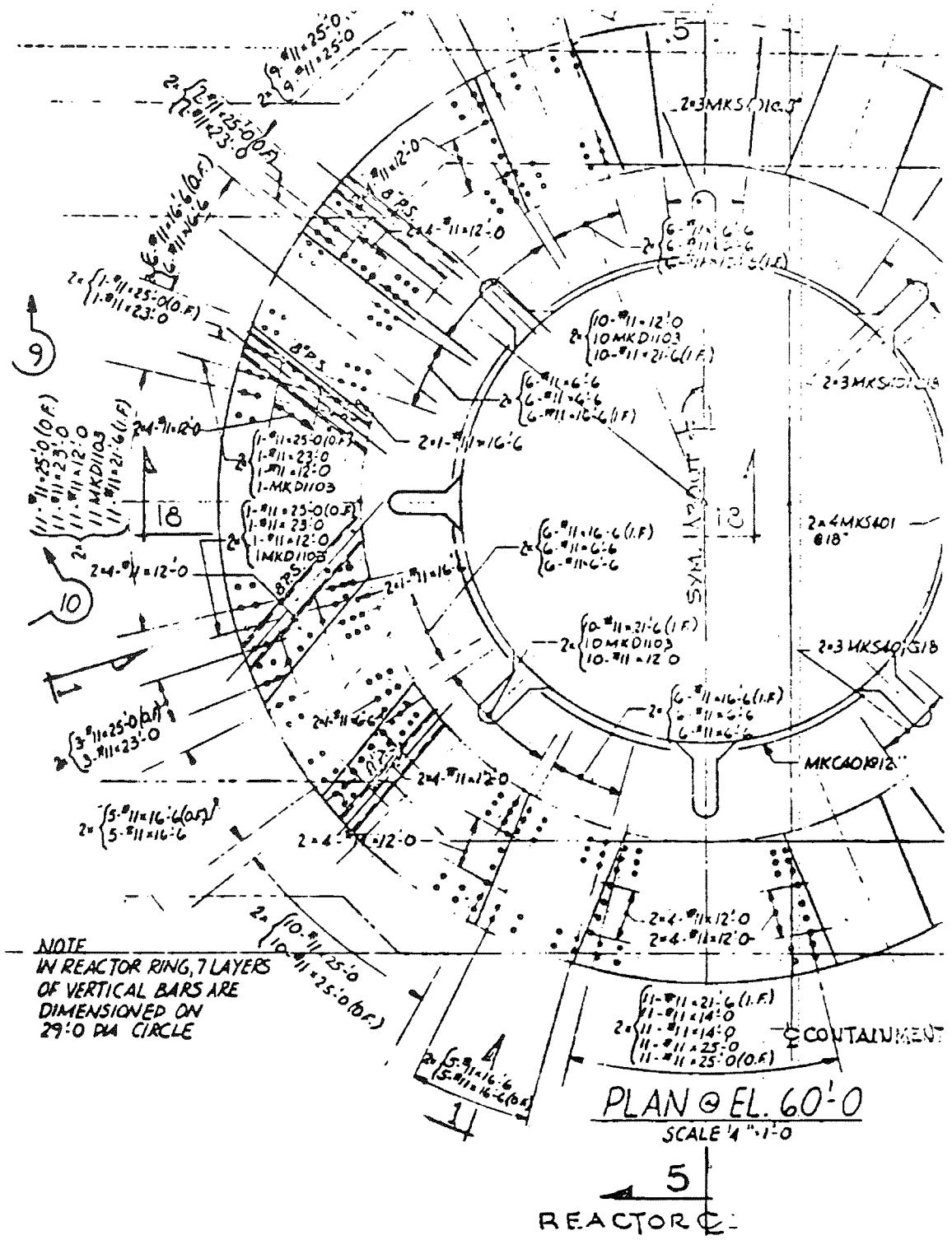

INDIAN POINT UNIT No. 2	
UFSAR FIGURE 5.1–46	
PLAN VIEW 60 FT – 0 IN.	
MIC. No. 1999MC3785	REV. No. 17A

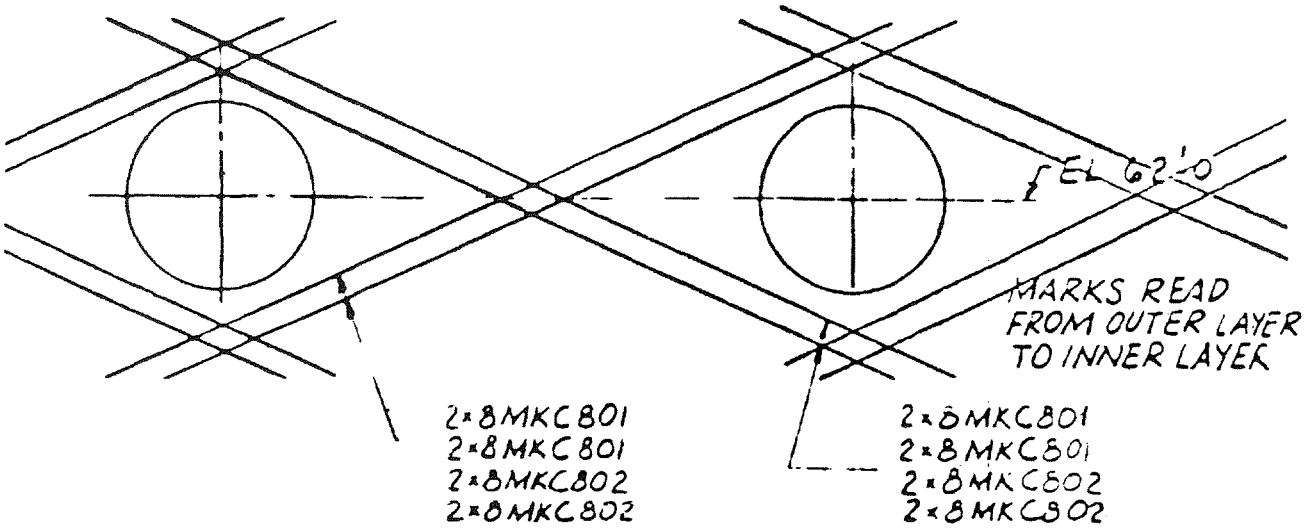

TYP. LAYER @ REACTOR RING

SCALE 1/4" : 1'-0

SECTION 1-1

INDIAN POINT UNIT No. 2	
UFSAR FIGURE 5.1–47 TYPICAL LAYER–REACTOR RING	
MIC. No. 1999MC3786	REV. No. 17A

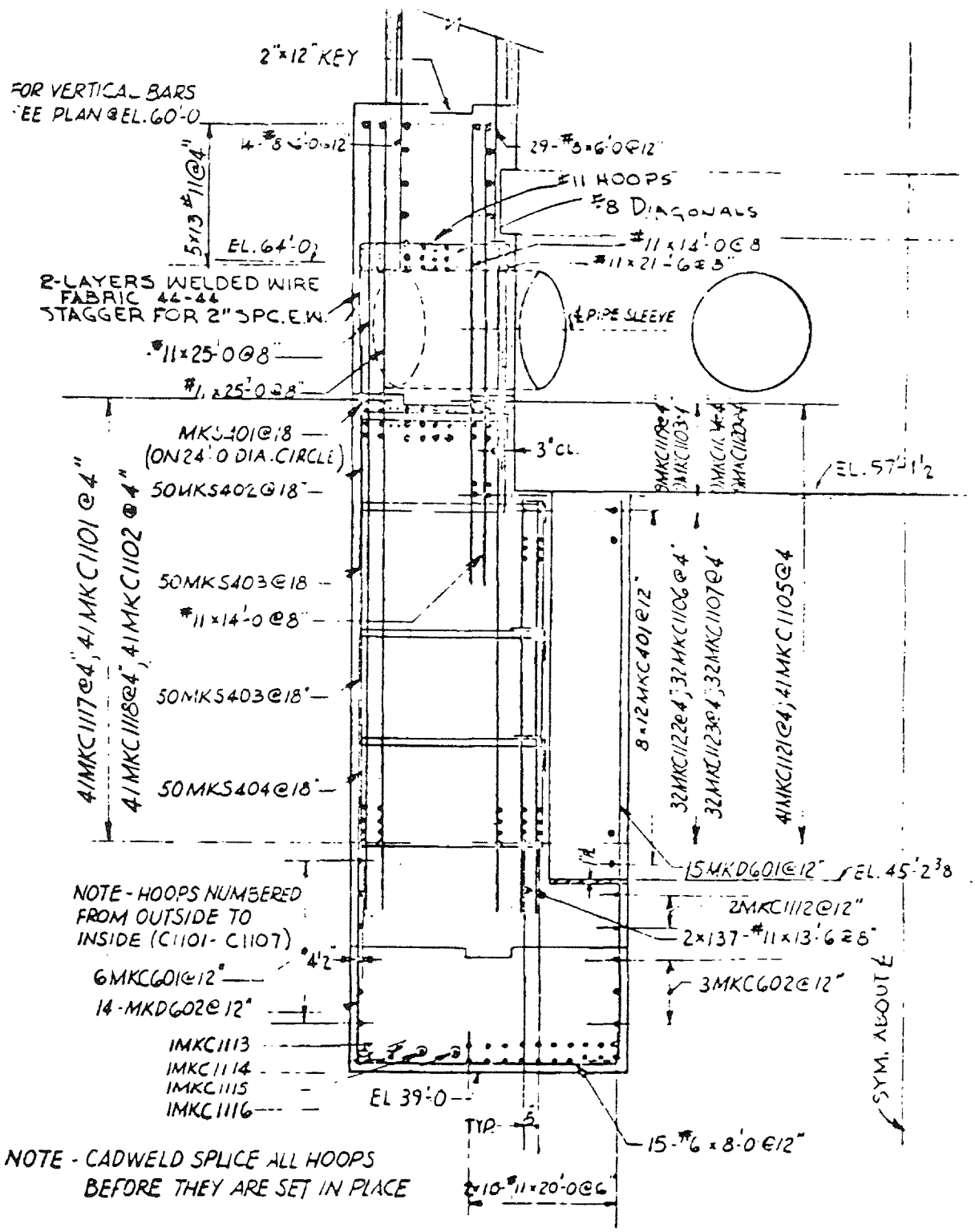

INDIAN POINT UNIT No. 2	
UFSAR FIGURE 5.1–48 SECTION 5–5	
MIC. No. 1999MC3787	REV. No. 17A

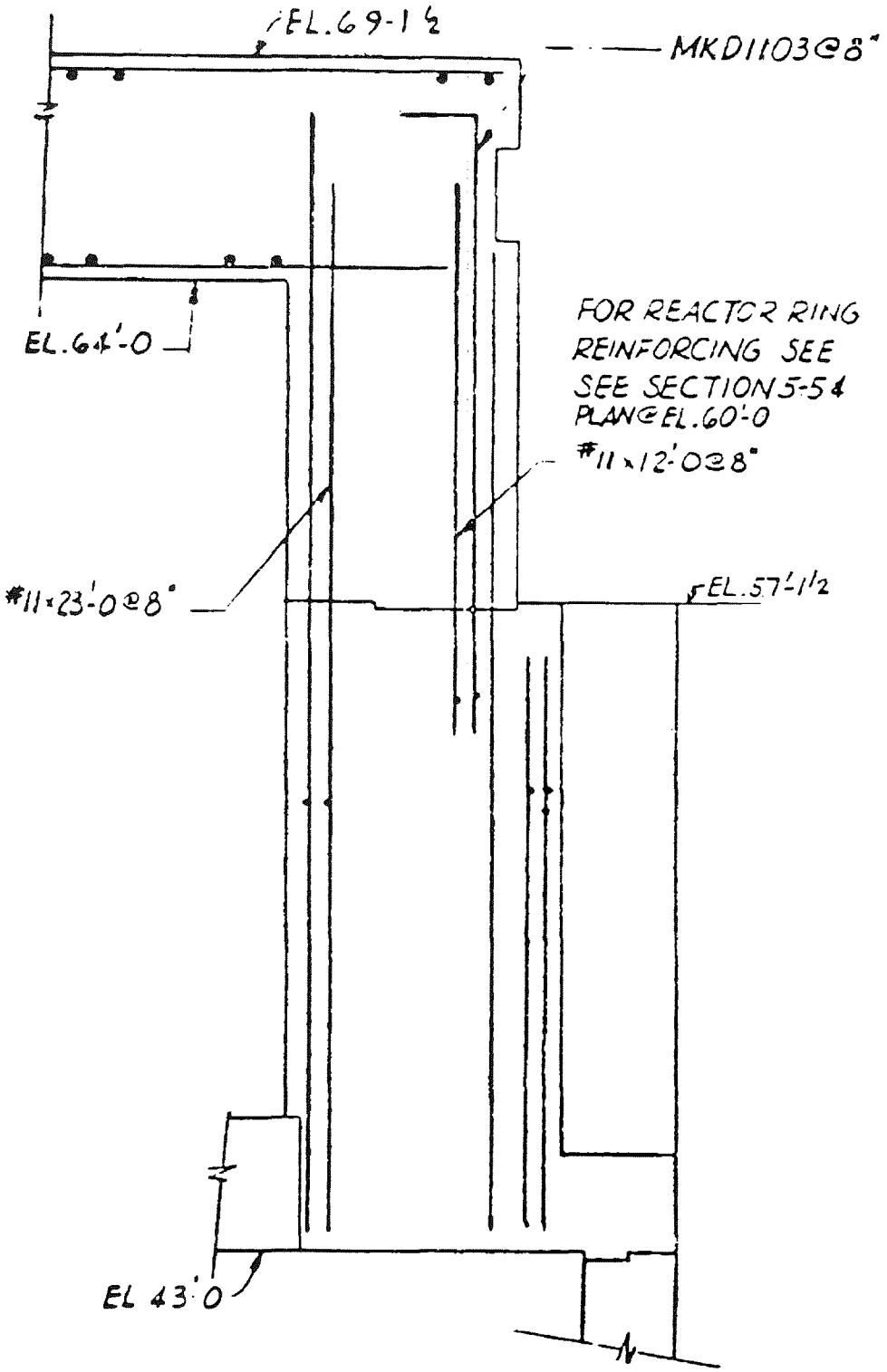

INDIAN POINT UNIT No. 2	
UFSAR FIGURE 5.1–49 SECTION 18–18	
MIC. No. 1999MC3788	REV. No. 17A

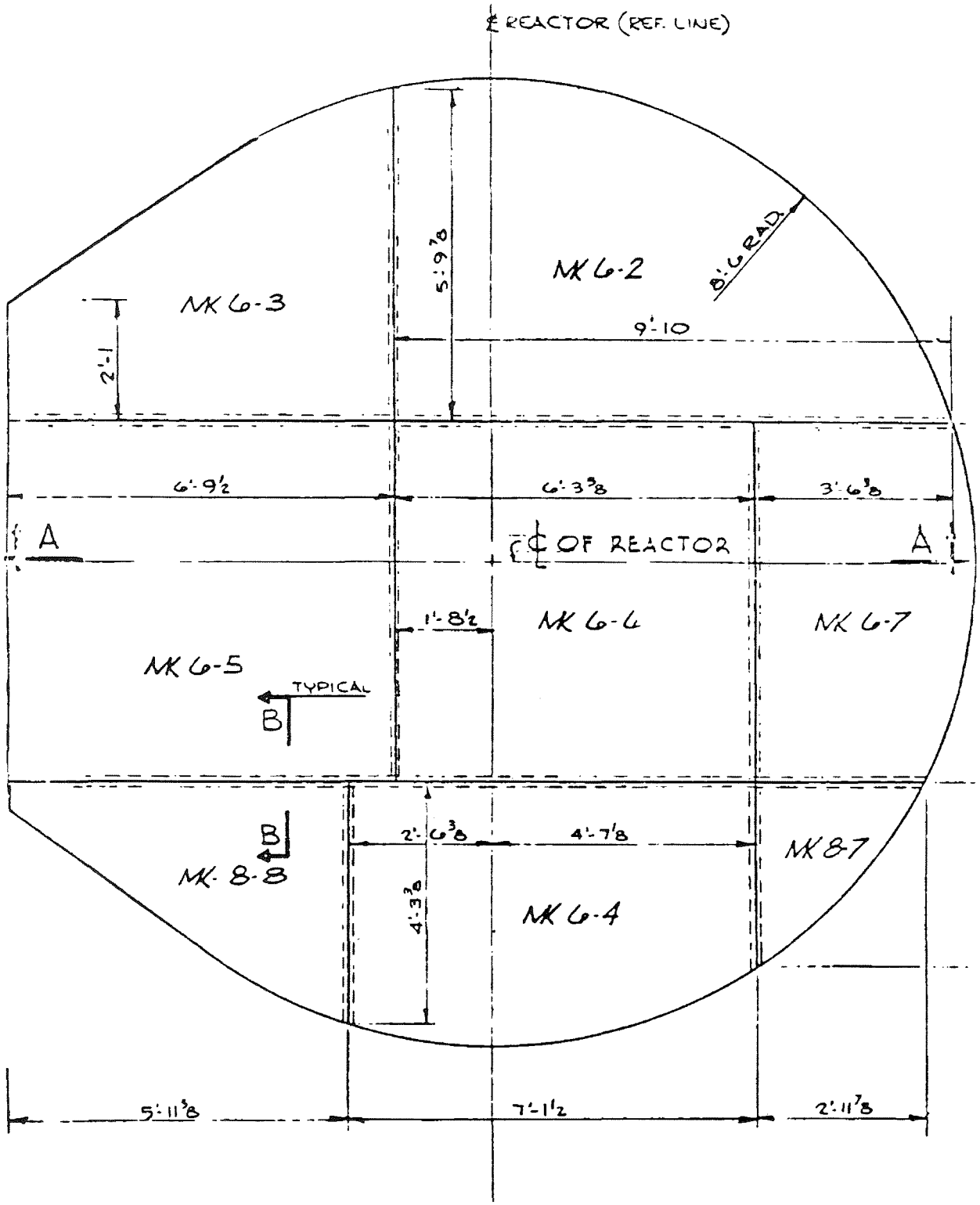

INDIAN POINT UNIT No. 2	
UFSAR FIGURE 5.1–50 PLAN VIEW AT ELEVATION 19 FT.–7 IN.	
MIC. No. 1999MC3789	REV. No. 17A

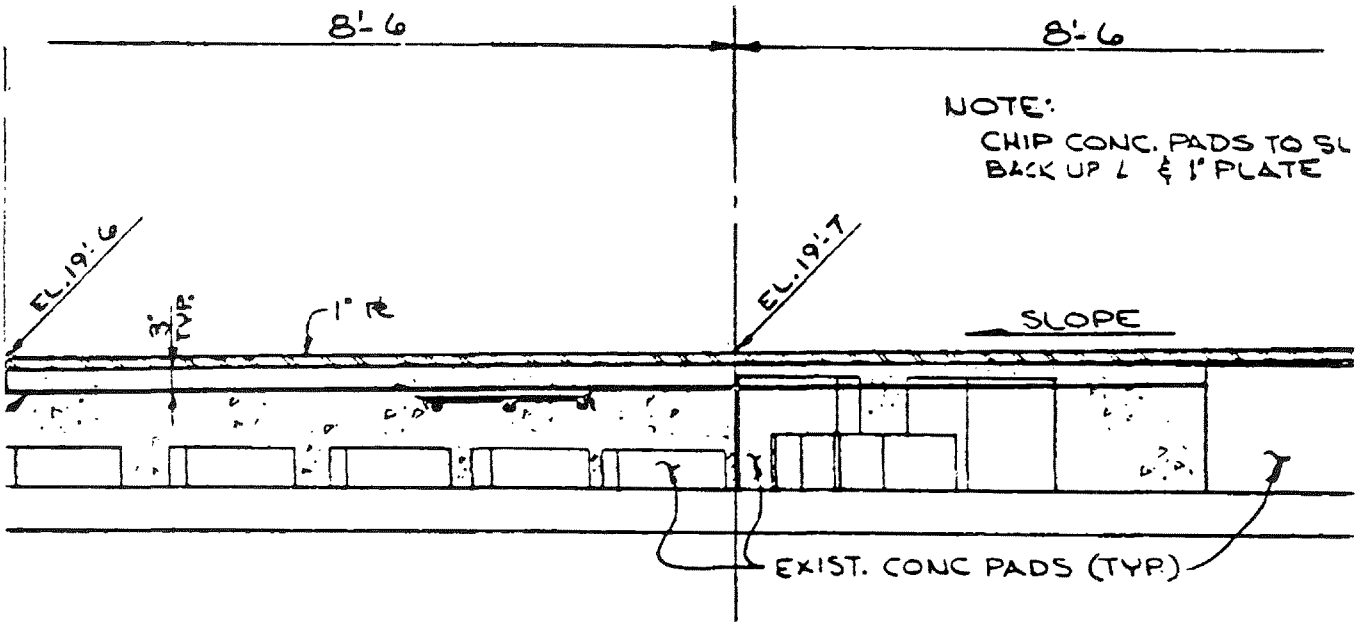

SECTION A-A

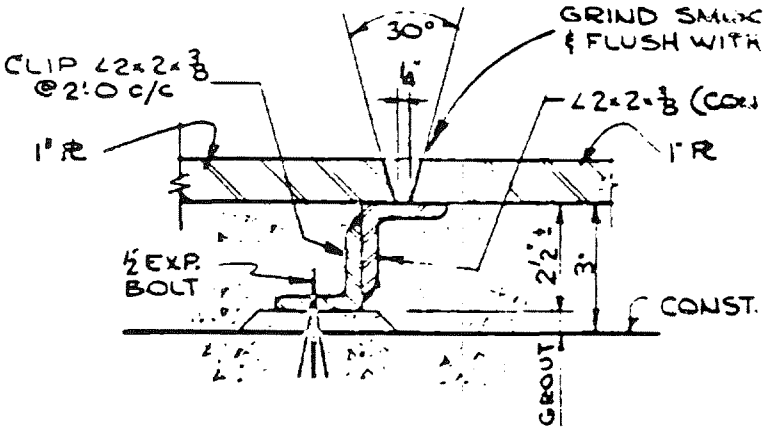

SECTION B-B

INDIAN POINT UNIT No. 2	
UFSAR FIGURE 5.1-51 SECTION A-A AND SECTION B-B	
MIC. No. 1999MC3790	REV. No. 17A

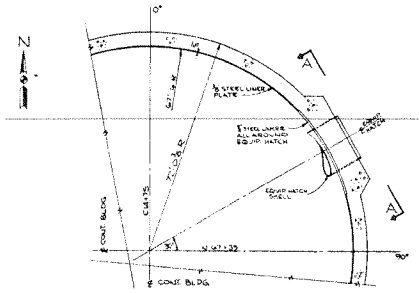

KEY PLAN

SCALE: 1/16" = 1'-0"

—CONTINUED FROM BELOW—

STRAIN GAUGE SCHEDULE

MARK No.	* HORIZONTAL LOCATION LEFT	RIGHT	VERTICAL LOCATION (ELEVATION)	RESPECTIVE STRUCTURAL TYPE	REMARKS
SG-45	0'-0"	0'-0"	EL. 92'-6"	HOOP IN EQUIP. HATCH BOSS	
SG-46	0'-0"	0'-0"	EL. 88'-4"	HOOP IN EQUIP. HATCH BOSS	
SG-47	—	8'-7"	EL. 101'-6"	HOOP IN EQUIP. HATCH BOSS	
SG-48	—	9'-6"	EL. 101'-8"	PRIMARY VERT. (CENTER OF BOSS)	
SG-49	—	11'-7"	EL. 101'-7"	PRIMARY VERT. (CENTER OF BOSS)	
SG-50	—	14'-1"	EL. 101'-6"	PRIMARY VERT. (CENTER OF BOSS)	
SG-51	—	15'-2"	EL. 101'-5"	PRIMARY VERT. (CENTER OF BOSS)	
SG-52	—	16'-5"	EL. 101'-11"	PRIMARY VERT. (OUTSIDE FACE)	
SG-53	0'-0"	0'-3"	EL. 92'-0"	HOOP (CENTER OF EQUIP. HATCH BOSS)	
SG-54	0'-0"	0'-7"	EL. 90'-2"	HOOP (CENTER OF EQUIP. HATCH BOSS)	
SG-55	0'-0"	0'-8"	EL. 88'-4"	HOOP (CENTER OF EQUIP. HATCH BOSS)	
SG-56	0'-0"	1'-1"	EL. 91'-6"	RADIAL SHEAR PLATE	4'-5 FROM LINER ℞
SG-57	0'-5"	0'-0"	EL. 88'-9"	" " "	4'-6 FROM LINER ℞
SG-58	—	12'-3"	EL. 100'-10"	" " "	6'-9 FROM LINER ℞
SG-59	—	7'-10"	EL. 101'-3"	" " "	3'-0 FROM LINER ℞
SG-60	—	10'-1"	EL. 101'-4"	" " "	5'-3 FROM LINER ℞

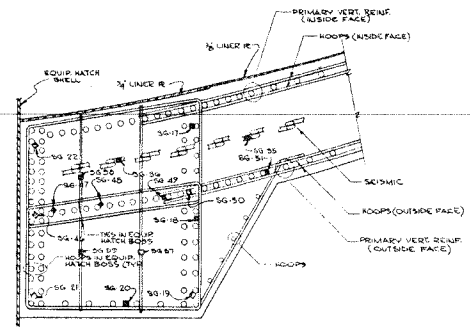

SECTION C-C

SCALE: 1/2" = 1'-0"

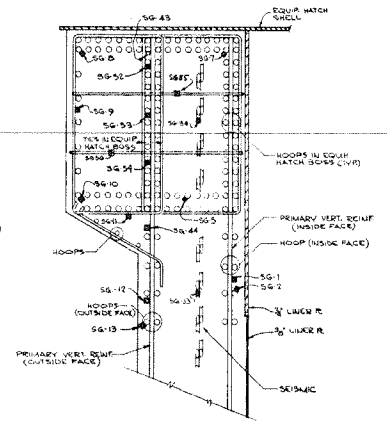

SECTION B-B

SCALE: 1/2" = 1'-0"

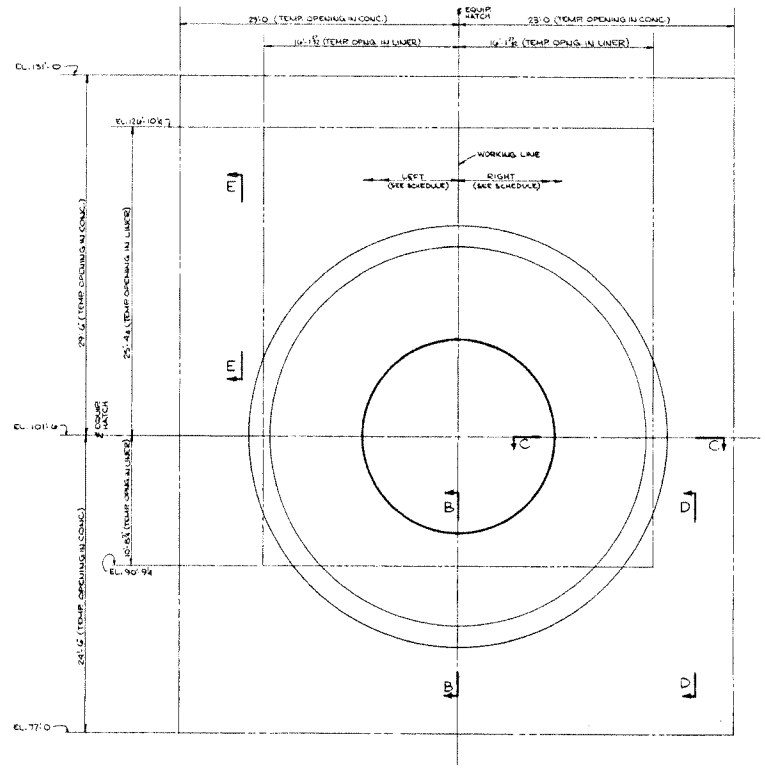

SECTION A-A (DEVELOPED ELEVATION)

SCALE: 1/8" = 1'-0"

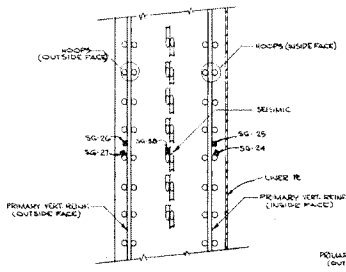

SECTION D-D

SCALE: 1/2" = 1'-0"

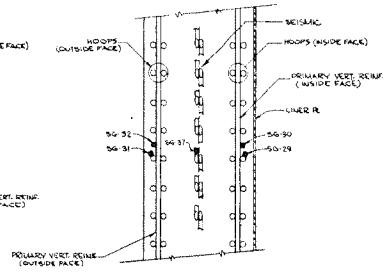

SECTION E-E

SCALE: 1/2" = 1'-0"

STRAIN GAUGE SCHEDULE

MARK No.	* HORIZONTAL LOCATION LEFT	RIGHT	VERTICAL LOCATION (ELEVATION)	RESPECTIVE STRUCTURAL TYPE	REMARKS
SG-1	0'-0"	0'-0"	EL. 83'-4"	PRIMARY VERT. (INSIDE FACE)	
SG-2	0'-0"	0'-0"	EL. 82'-9"	HOOP (INSIDE FACE)	
SG-3	0'-0"	0'-0"	EL. 87'-3"	HOOP IN EQUIPMENT HATCH BOSS	2'-7 FROM LINER ℞
SG-7	0'-0"	0'-0"	EL. 92'-3"	HOOP IN EQUIPMENT HATCH BOSS	
SG-8	0'-0"	0'-0"	EL. 92'-6"	HOOP IN EQUIPMENT HATCH BOSS	
SG-9	0'-0"	0'-0"	EL. 90'-2"	TIE IN EQUIPMENT HATCH BOSS	
SG-10	0'-0"	0'-0"	EL. 86'-5"	HOOP IN EQUIPMENT HATCH BOSS	
SG-11	0'-3"	0'-0"	EL. 85'-11"	TIE IN EQUIPMENT HATCH BOSS	
SG-12	0'-0"	0'-0"	EL. 82'-7"	PRIMARY VERT. (OUTSIDE FACE)	
SG-13	0'-0"	0'-0"	EL. 82'-1"	HOOP (OUTSIDE FACE)	
SG-17	—	12'-3"	EL. 101'-0"	HOOP IN EQUIPMENT HATCH BOSS	
SG-18	—	15'-4"	EL. 100'-10"	TIE IN EQUIPMENT HATCH BOSS	
SG-19	—	16'-2"	EL. 101'-0"	HOOP IN EQUIPMENT HATCH BOSS	
SG-20	—	17'-6"	EL. 100'-5"	TIE IN EQUIPMENT HATCH BOSS	
SG-21	—	8'-10"	EL. 100'-8"	HOOP IN EQUIPMENT HATCH BOSS	
SG-22	—	8'-7"	EL. 101'-6"	HOOP IN EQUIPMENT HATCH BOSS	
SG-24	—	21'-0"	EL. 87'-9"	HOOP (INSIDE FACE)	
SG-25	—	21'-0"	EL. 83'-4"	PRIMARY VERT. (INSIDE FACE)	
SG-26	—	22'-3"	EL. 82'-7"	PRIMARY VERT. (OUTSIDE FACE)	
SG-27	—	22'-0"	EL. 82'-4"	HOOP (OUTSIDE FACE)	
SG-29	21'-0"	—	EL. 120'-3"	HOOP (INSIDE FACE)	
SG-30	21'-0"	—	EL. 120'-10"	PRIMARY VERT. (INSIDE FACE)	
SG-31	21'-7"	—	EL. 120'-9"	HOOP (OUTSIDE FACE)	
SG-32	21'-9"	—	EL. 121'-2"	PRIMARY VERT. (OUTSIDE FACE)	
SG-33	0'-0"	0'-0"	EL. 82'-9"	SEISMIC	
SG-34	0'-0"	0'-0"	EL. 89'-9"	SEISMIC	
SG-35	—	13'-10"	EL. 101'-4"	SEISMIC	
SG-36	—	17'-0"	EL. 101'-6"	SEISMIC	
SG-37	21'-0"	—	EL. 120'-3"	SEISMIC	
SG-38	—	21'-0"	EL. 82'-9"	SEISMIC	
— FOR CONTINUATION OF STRAIN GAUGE SCHEDULE SEE ABOVE —					

* FOR CORRECT ORIENTATION OF *LEFT RIGHT* DIRECTIONS SEE *WORKING LINE* ON SECTION A-A

GENERAL NOTES

1. WHERE STRAIN GAUGES AND RESPECTIVE STRUCTURAL TYPE LOCATIONS DO NOT COINCIDE ACCORDING TO GIVEN DIMENSIONS AND/OR GIVEN ELEVATIONS, PLACE STRAIN GAUGE ON NEAREST STRUCTURAL ELEMENT OF THE SAME TYPE.

INDIAN POINT UNIT No. 2

UFSAR FIGURE 5.1-53

CONTAINMENT EQUIPMENT HATCH STRAIN GAUGE TEST LOCATIONS

MIC. No. 1999MC3792 | REV. No. 17A

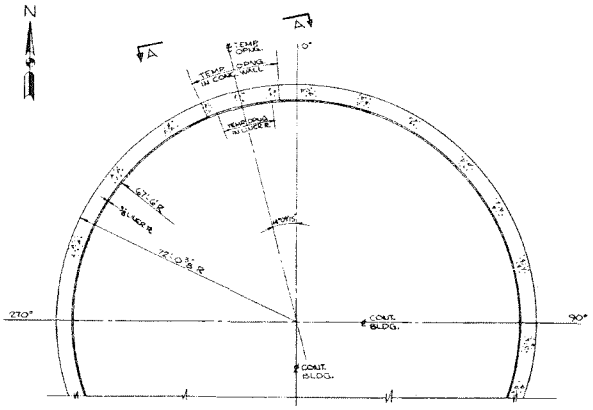

KEY PLAN

SCALE 1/16" = 1'-0"

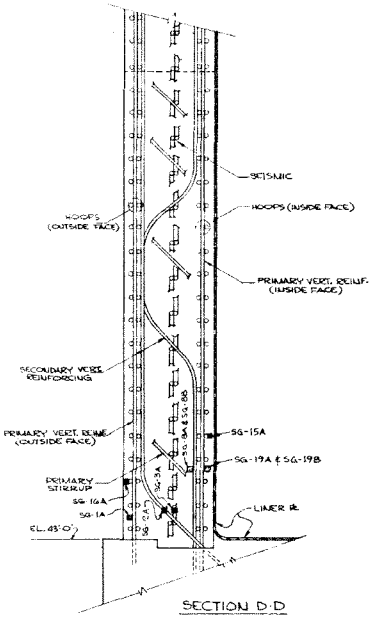

SECTION D-D

1/1 REDUNDANCY REQUIRED ON GUAGES SG-8A & SG-19A

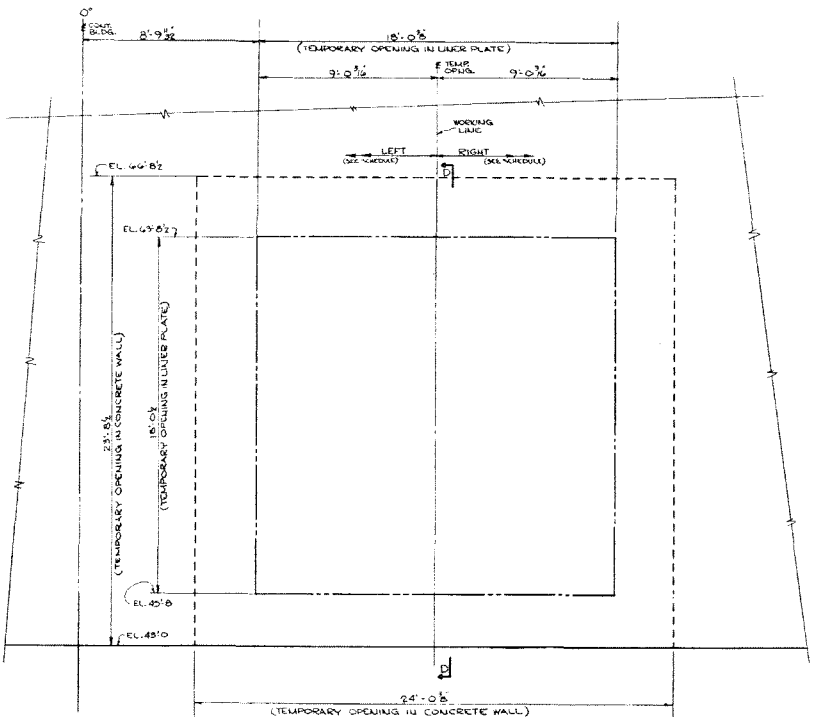

SECTION A-A (DEVELOPED ELEVATION)

SCALE: 3/16" = 1'-0"

STRAIN GAUGE SCHEDULE

MARK No.	HORIZONTAL LOCATION * LEFT	HORIZONTAL LOCATION * RIGHT	VERTICAL LOCATION (ELEVATION)	RESPECTIVE STRUCTURAL TYPE	REMARKS
SG-1A	—	0'-6"	EL. 44'-2	PRIMARY VERT. (OUTSIDE FACE)	
SG-2A	—	0'-6"	EL. 44'-2	SECONDARY VERTICAL	
SG-3A	—	0'-6"	EL. 44'-2	SEISMIC	
SG-8A	—	0'-6"	EL. 46'-6	SECONDARY VERTICAL	
SG-8D	—	0'-6"	EL. 46'-6	SECONDARY VERTICAL	"REDUNDANT GUAGE"
SG-15A	—	0'-6"	EL. 48'-0	HOOP (INSIDE FACE)	
SG-16A	—	0'-6"	EL. 49'-11	HOOP (OUTSIDE FACE)	
SG-19A	—	0'-6"	EL. 46'-6	PRIMARY VERT. (INSIDE FACE)	
SG-19B	—	2'-6"	EL. 46'-6	PRIMARY VERT. (INSIDE FACE)	"REDUNDANT GUAGE"

* FOR CORRECT ORIENTATION OF *LEFT & RIGHT* DIRECTIONS SEE *WORKING LINE* ON SECTION A-A

GENERAL NOTES

1. WHERE STRAIN GAUGES AND RESPECTIVE STRUCTURAL TYPE LOCATIONS DO NOT COINCIDE ACCORDING TO GIVEN DIMENSIONS AND/OR GIVEN ELEVATIONS, PLACE STRAIN GAUGE ON NEAREST STRUCTURAL ELEMENT OF THE SAME TYPE.

INDIAN POINT UNIT No. 2

UFSAR FIGURE 5.1-54

CONTAINMENT TEMPORARY OPENING IN NW QUADRANT STRAIN GAUGE TEST LOCATIONS

MIC. No. 1999MC3793 | REV. No. 17A

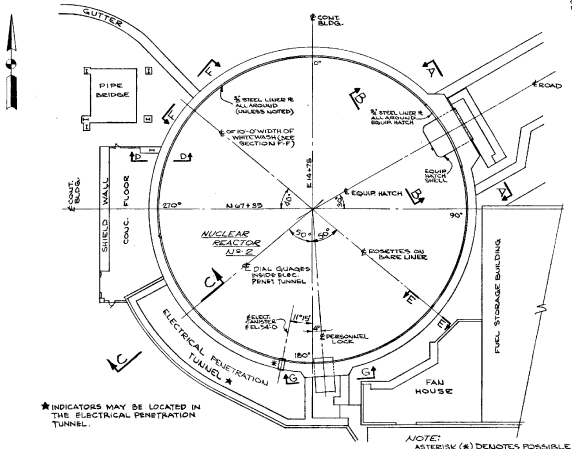

★ INDICATORS MAY BE LOCATED IN THE ELECTRICAL PENETRATION TUNNEL.

NOTE:
ASTERISK (*) DENOTES POSSIBLE OUT-LETS FOR LEADS FROM ROSETTES. ELECTRICAL PENETRATIONS WITH PIGTAILS WILL BE AVAILABLE.

KEY PLAN
SCALE: 1" = 20'-0"

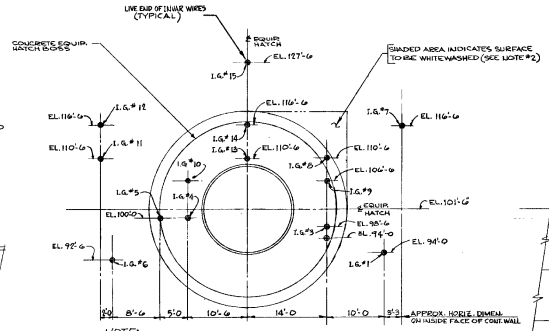

NOTE:
LIVE ENDS OF INVAR WIRES TO BE ATTACHED TO INSIDE FACE OF CONTAINMENT WALL AS SHOWN (AS BUILT CONDITIONS SHOWN) DEAD END TO BE ATTACHED TO POLAR CRANE COLUMNS AND GIRDERS, PRESSURIZER SHIELD WALL AND CRANE WALL AS NECESSARY TO LOCATE WIRES AS SHOWN.

SECTION A-A
(LOOKING FROM OUTSIDE)
SCALE: 1/8" = 1'-0"

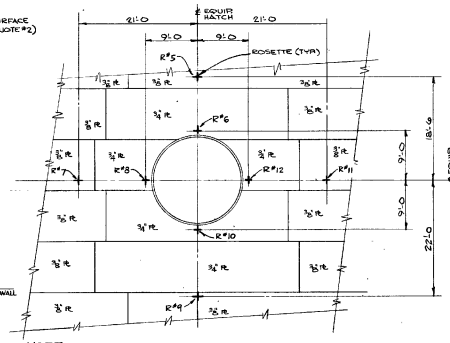

NOTE:
EIGHT STRAIN ROSETTES FIXED TO THE BARE STEEL OF THE LINER SURROUNDING THE EQUIPMENT HATCH.

SECTION B-B
SCALE: 1/8" = 1'-0"

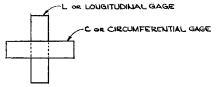

TYPICAL ROSETTE
NO SCALE

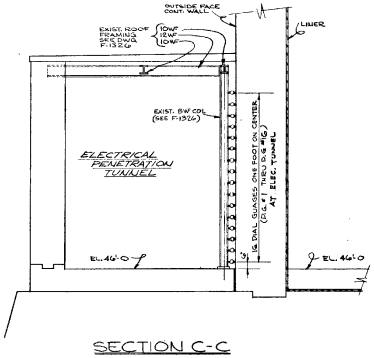

SECTION C-C
SCALE: 1/4" = 1'-0"

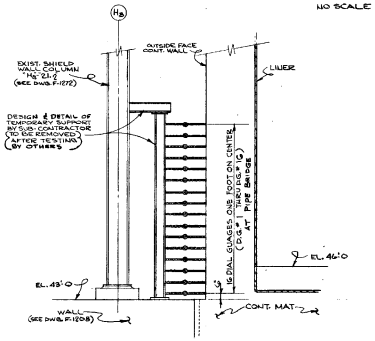

SECTION D-D
SCALE: 1/4" = 1'-0"

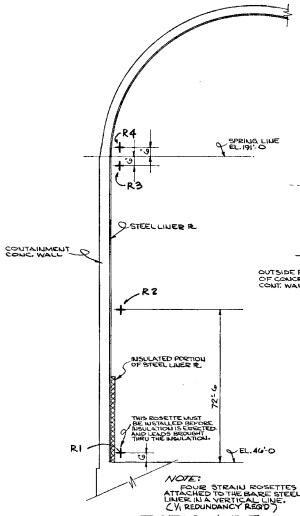

NOTE:
FOUR STRAIN ROSETTES ATTACHED TO THE BARE STEEL LINER IN A VERTICAL LINE. (1/4 REDUNDANCY REQ'D)

SECTION E-E
SCALE 3/16" = 1'-0"

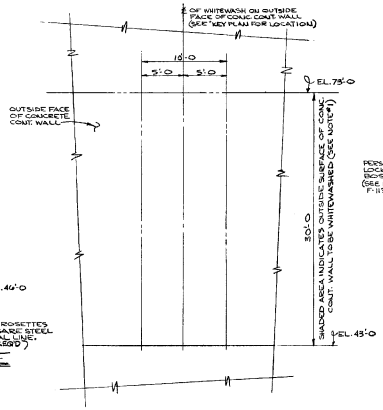

SECTION F-F
SCALE: 3/16" = 1'-0"

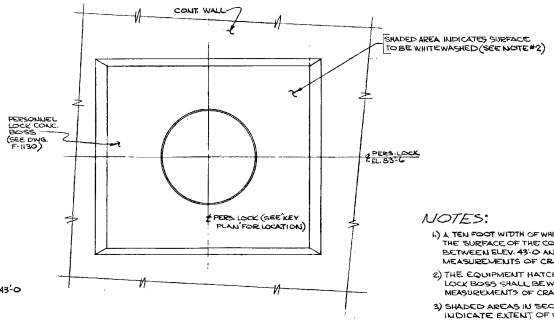

SECTION G-G
SCALE: 1/4" = 1'-0"

NOTES:

1.) A TEN FOOT WIDTH OF WHITEWASH SHALL BE PLACED ON THE SURFACE OF THE CONCRETE CONTAINMENT WALL BETWEEN ELEV. 43'-0 AND ELEV. 75'-0 FOR DETAILED MEASUREMENTS OF CRACK WIDTHS. (SEE SECT. F-F)

2.) THE EQUIPMENT HATCH BOSS AND THE PERSONNEL LOCK BOSS SHALL BE WHITEWASHED FOR DETAILED MEASUREMENTS OF CRACK WIDTHS (SEE SECT.'S "A-A" & "G-G")

3.) SHADED AREAS IN SECTIONS "A-A", "F-F" AND "G-G" (ONLY) INDICATE EXTENT OF WHITEWASH.

4.) REDUNDANCY OF GUAGES NOT REQUIRED UNLESS OTHERWISE NOTED

5.) DIAL GUAGE AND ROSETTE MARK NUMBERS CORRESPOND TO IDENTIFYING NUMBERS IN LIST OF U.E.C. EXPECTED VALUES AND ARE NOT TO BE CONFUSED WITH S.I.T CONTRACTOR'S GAUGE IDENTIFICATION

INDIAN POINT UNIT No. 2	
UFSAR FIGURE 5.1-55	
CONTAINMENT STRAIN GAUGE TEST LOCATIONS	
MIC. No. 1999MC3794	REV. No. 17A

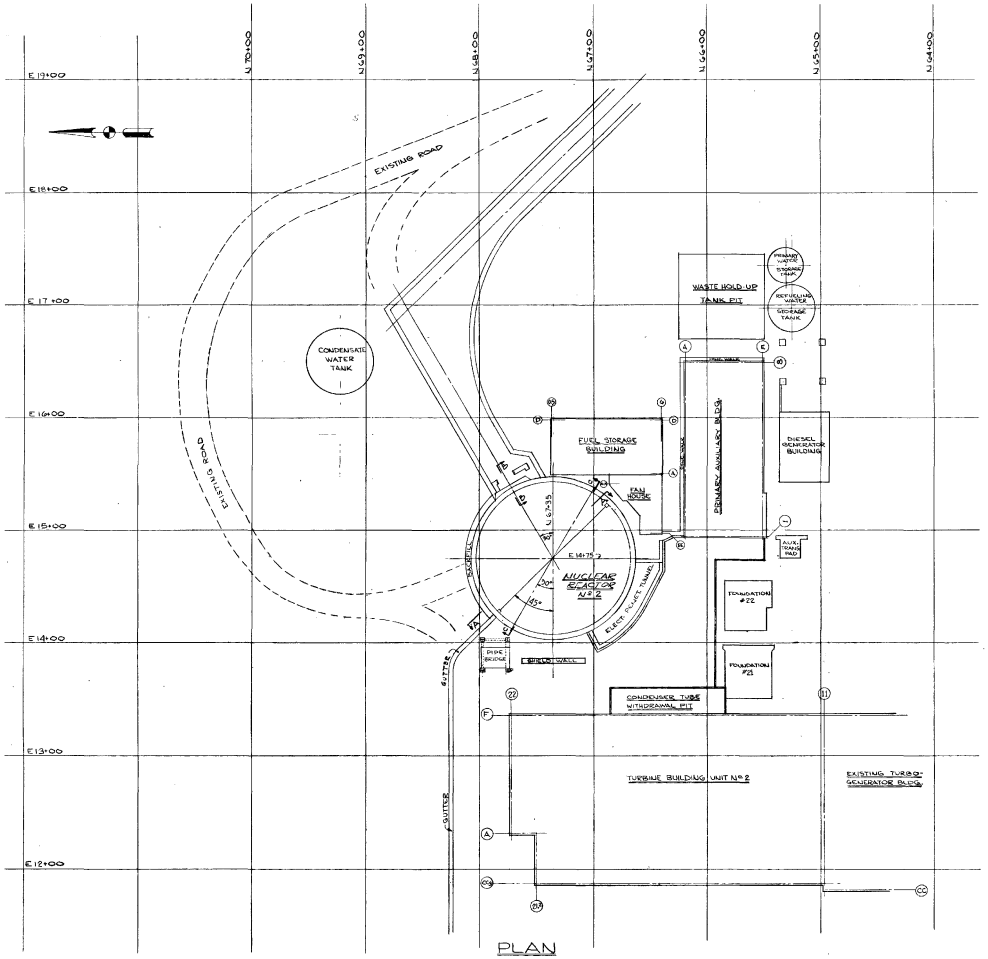

PLAN

SCALE: 1" = 40'-0"

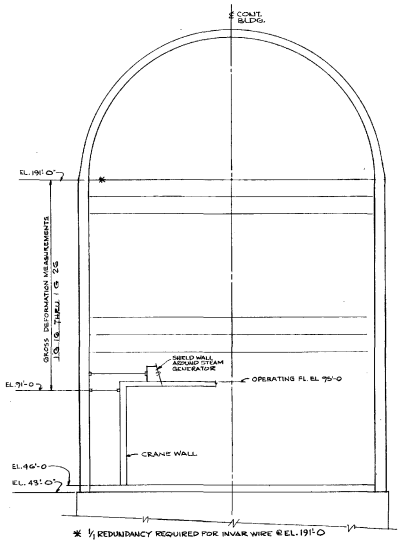

SECTION A-A

SCALE: 1/64" = 1'-0

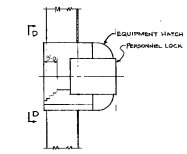

SECTION B-B

SCALE: 1/64" = 1'-0

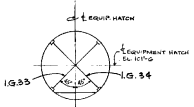

SECTION D-D

SCALE: 1/64" = 1'-0

VERTICAL MEASUREMENT READINGS SHALL BE OBTAINED AT ELEVATIONS MARKED WITH AN ASTERISK (*). THE TAPE SHALL BE ATTACHED TO THE LINER BY OTHERS AND ANCHORED TO THE MAT AT EL. 46'-0.

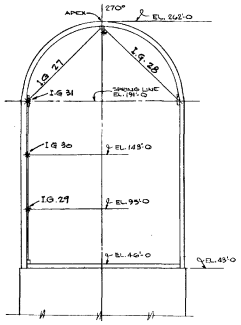

SECTION C-C

SCALE: 1" = 40'-0"

NOTES

1. PROOF TEST GROSS DEFORMATION INSTRUMENTATION SHALL BE LOCATED BETWEEN ELEVATIONS SHOWN IN SECTION "A-A" AT EVERY TEN FEET ALONG VERTICAL PLANE OF CONTAINMENT BUILDING - AS SHOWN IN PLAN.
2. ALL GROSS DEFORMATION MEASUREMENTS SHALL BE OBTAINED BY AN INVAR WIRE EXTENSOMETER WITH A LINEAR POTENTIOMETER SENSING DEVICE (19 REQ'D).
3. ALL NECESSARY ATTACHMENTS TO THE LINER, OR EQUIPMENT HATCH ARE BY OTHERS.
4. LOCATIONS GIVEN INDICATE THE DESIRED POSITION OF INVAR TAPE. IF INTERFERENCE IS ENCOUNTERED INSIDE THE CONTAINMENT BUILDING TAPE SHALL BE LOCATED AS CLOSE TO GIVEN POSITION AS POSSIBLE.
5. TOTAL TRAVEL OF POTENTIOMETER SHALL BE 2" MINIMUM EXCEPT FOR VERTICAL MEASUREMENTS AT EL 95'-0, EL 143'-0 AND TOP OF DOME, RADIUS CHANGE AT EL. 91'-0 AND CONCRETE OPENING DIAMETER CHANGE AT EQUIPMENT HATCH WHERE POTENTIOMETERS WITH 1.5" TRAVEL SHALL BE USED.
6. FIELD SHALL MEASURE AND RECORD RADIUS AT EACH POINT WHERE INVAR TAPES IN SECTION A-A ARE ATTACHED TO THE LINER.
7. FIELD SHALL INSTALL THERMOCOUPLES ON OUTSIDE OF CONTAINMENT SHELL. THEY SHALL BE EMBEDDED IN CONCRETE SO NOT EXPOSED TO DIRECT RADIATION FROM SUN. AS A MINIMUM ONE (1) THERMOCOUPLE SHALL BE INSTALLED IN CYLINDER WALL BELOW AND ABOVE INSULATION AND IN THE DOME.
8. STRUCTURAL INTEGRITY TEST CONTRACTOR SHALL SUPPLY RECORDING INSTRUMENTATION NECESSARY FOR THERMOCOUPLES.

INDIAN POINT UNIT No. 2	
UFSAR FIGURE 5.1-56	
CONTAINMENT PROOF TEST GROSS DEFORMATION MEASUREMENTS	
MIC. No. 1999MC3795	REV. No. 17A

Item 1 Pressurizer Relief Tank to Gas Analyzer
Item 2 Pressurizer Relief Tank N_2 Supply
Item 3 Pressurizer Relief Tank Makeup

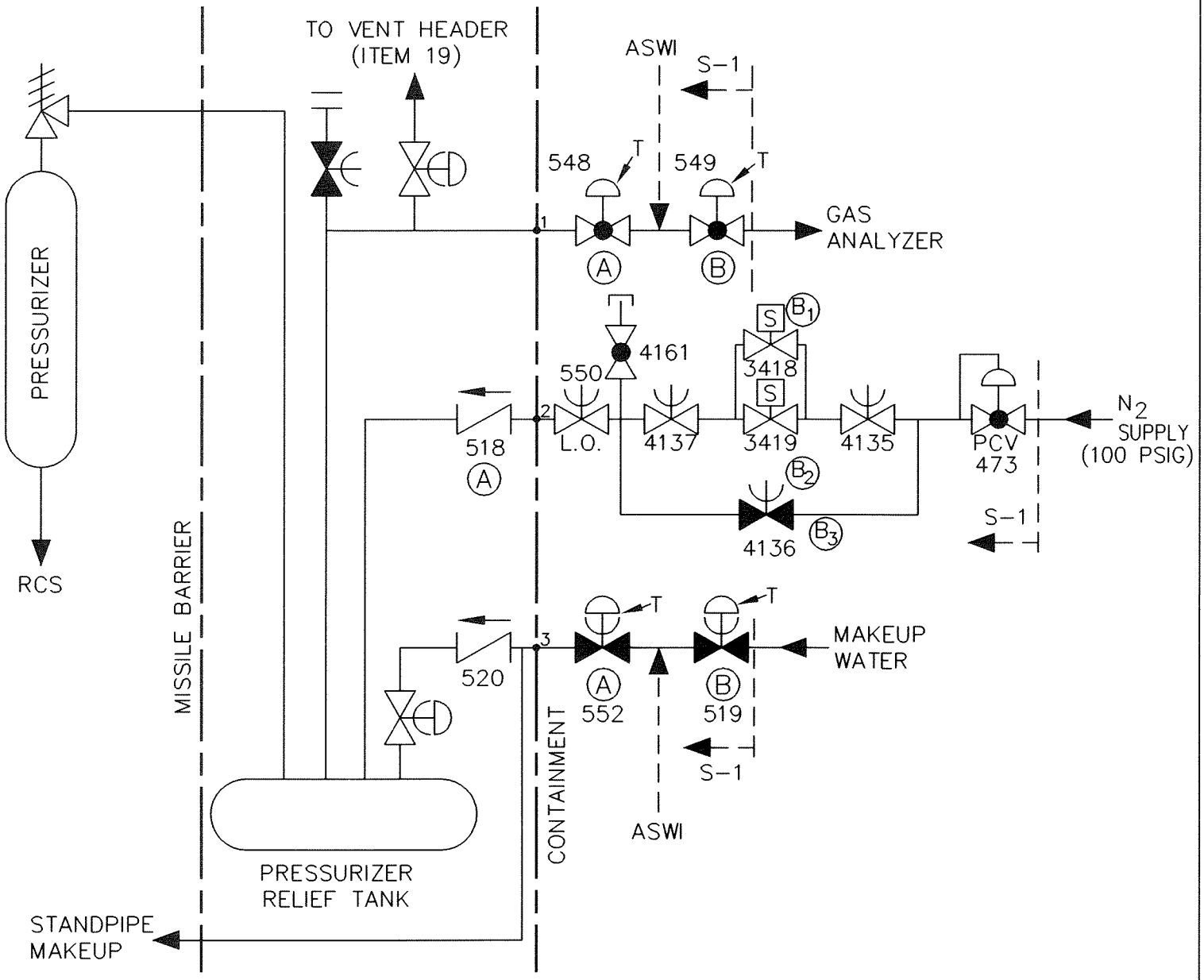

Although the Pressurizer Relief Tank is missile protected, these penetrating lines can become exposed to containment atmosphere if the pressurizer discharge header is breached during the accident.

INDIAN POINT UNIT No. 2	
UFSAR FIGURE 5.2-1 CONTAINMENT ISOLATION SYSTEM PENETRATION SCHEMATICS	
MIC. No. 1999MC3411	REV. No. 17A
VALVE POSITIONS ARE NOT CONTROLLED BY THIS FIGURE	

Item 4 Residual Heat Removal Return

Item 5 Residual Heat Removal Loop To Safety Injection Pumps

Item 6 Residual Heat Removal Loop Out

Item 7 Containment Sump Recirculation Line

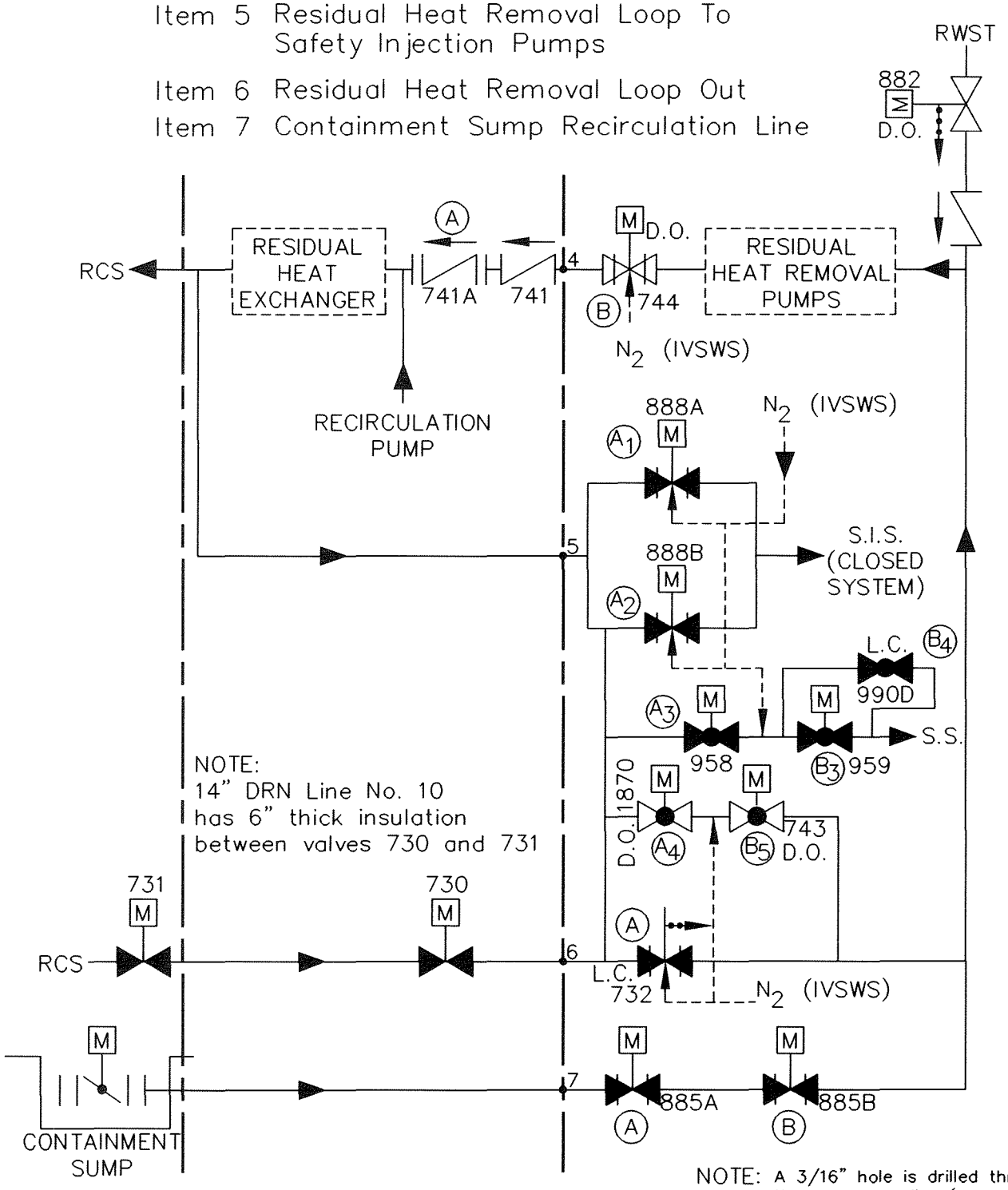

NOTE: A 3/16" hole is drilled through the upstream disc (nearest containment) of 885A and the downstream disc (RHR Loop Side) of 885B to prevent pressure locking.

N_2 – Manual N_2 Pressurization

SS – Sampling System

ENTIRE SYSTEM SHOWN IS SEISMIC CLASS I DESIGN

INDIAN POINT UNIT No. 2	
UFSAR FIGURE 5.2-2 CONTAINMENT ISOLATION SYSTEM PENETRATION SCHEMATICS	
MIC. No. 1999MC3382	REV. No. 17A
VALVE POSITIONS ARE NOT CONTROLLED BY THIS FIGURE	

ITEM 8 LETDOWN LINE

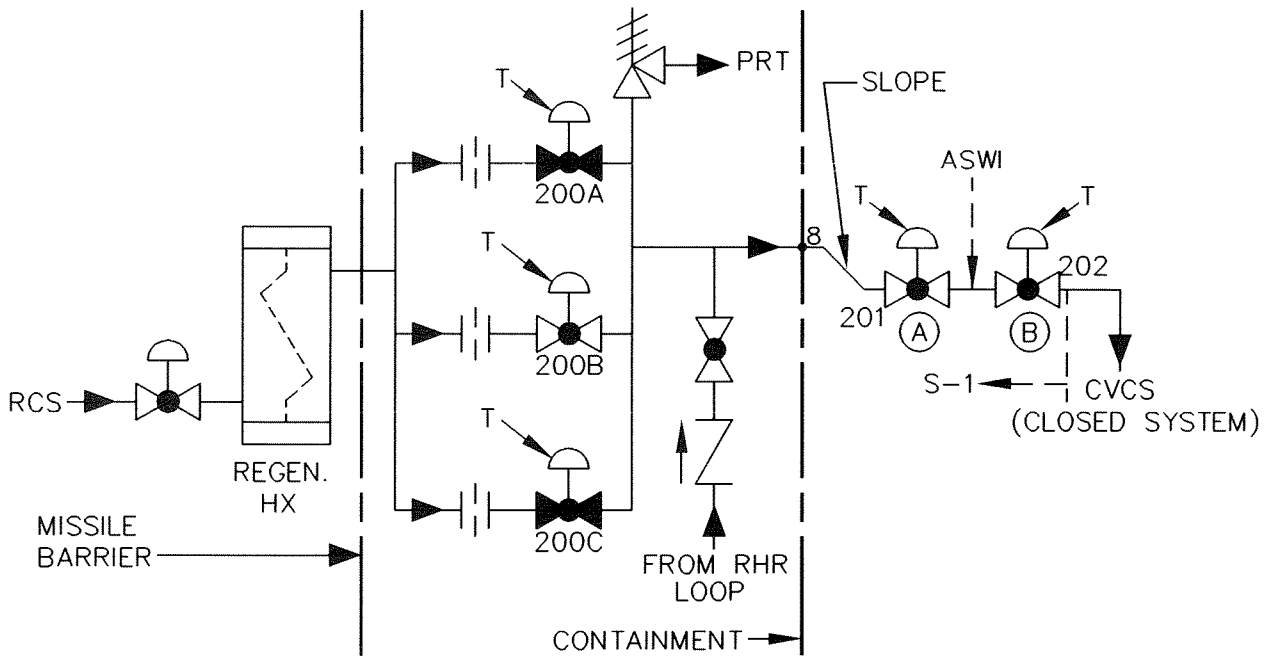

PRT – PRESSURIZER RELIEF TANK

ITEM 9 CHARGING LINE

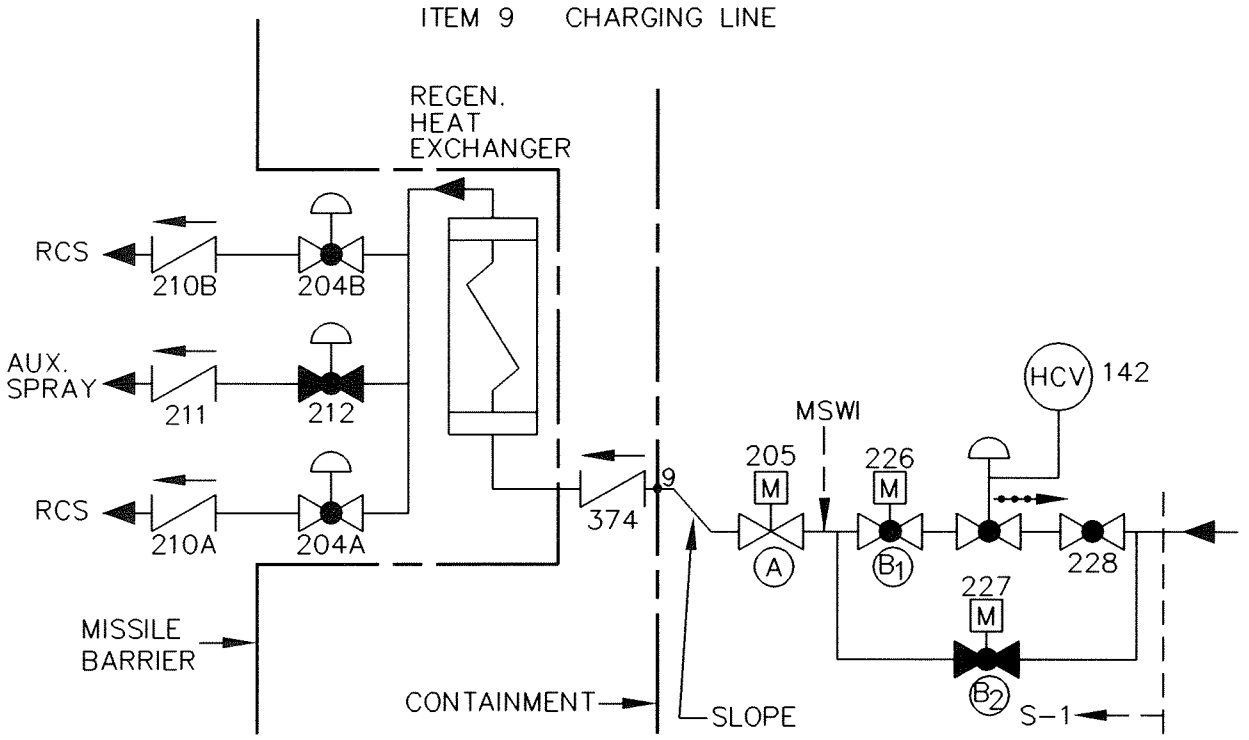

INDIAN POINT UNIT No. 2	
UFSAR FIGURE 5.2-3 CONTAINMENT ISOLATION SYSTEM PENETRATION SCHEMATICS	
MIC. No. 1999MC3383	REV. No. 17A
VALVE POSITIONS ARE NOT CONTROLLED BY THIS FIGURE	

ITEM 10 REACTOR COOLANT PUMP SEAL-WATER SUPPLY LINES

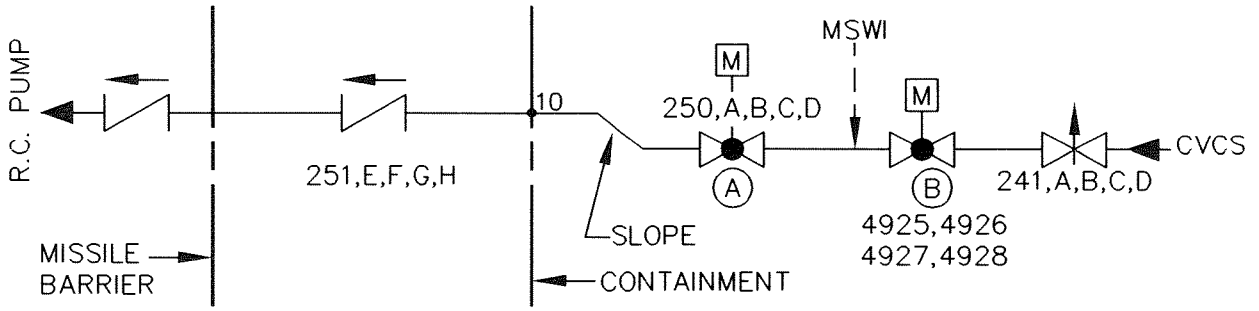

ENTIRE SYSTEM SHOWN IS SEISMIC CLASS 1 DESIGN

ITEM 11 REACTOR COOLANT PUMP SEAL-WATER RETURN

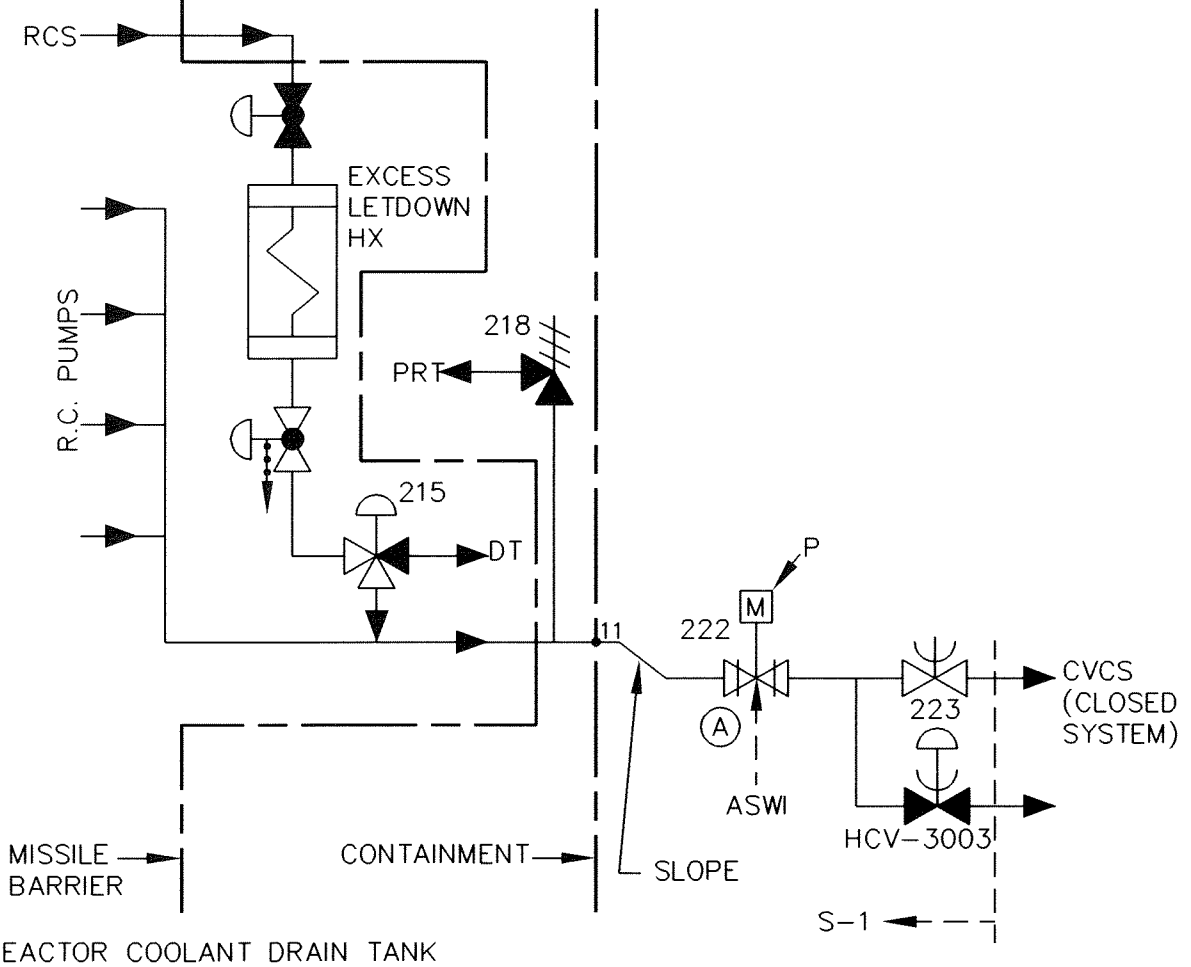

DT – REACTOR COOLANT DRAIN TANK

P – TRIPPED CLOSED BY CONTAINMENT ISOLATION SIGNAL PHASE B

PRT – PRESSURIZER RELIEF TANK

INDIAN POINT UNIT No. 2	
UFSAR FIGURE 5.2-4 CONTAINMENT ISOLATION SYSTEM PENETRATION SCHEMATICS	
MIC. No. 1999MC3385	REV. No. 17A
VALVE POSITIONS ARE NOT CONTROLLED BY THIS FIGURE	

ITEM 12 REACTOR COOLANT SYSTEM SAMPLE LINES

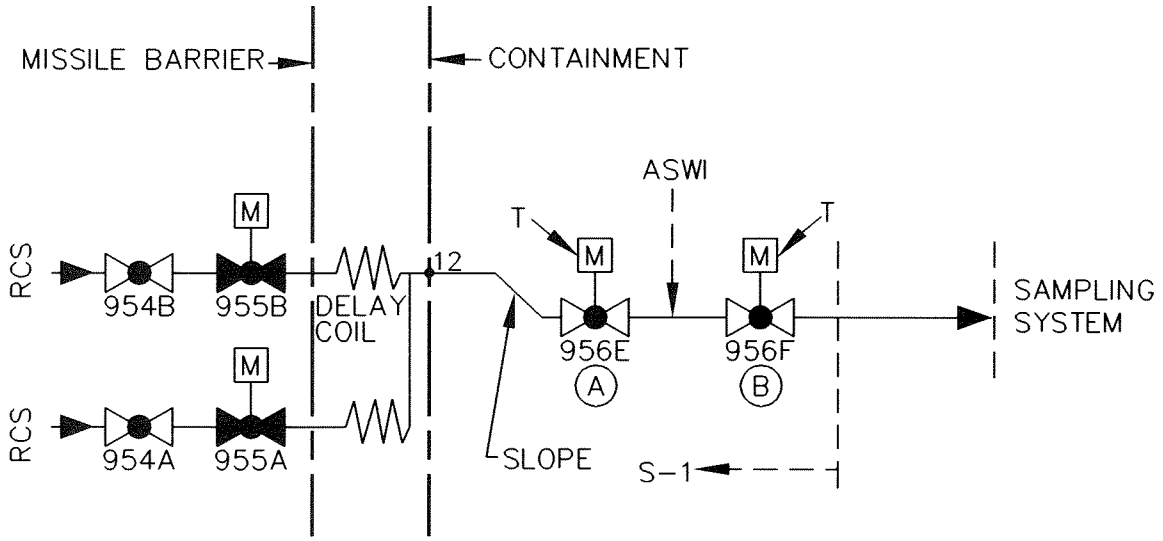

ITEM 13 FUEL TRANSFER TUBE

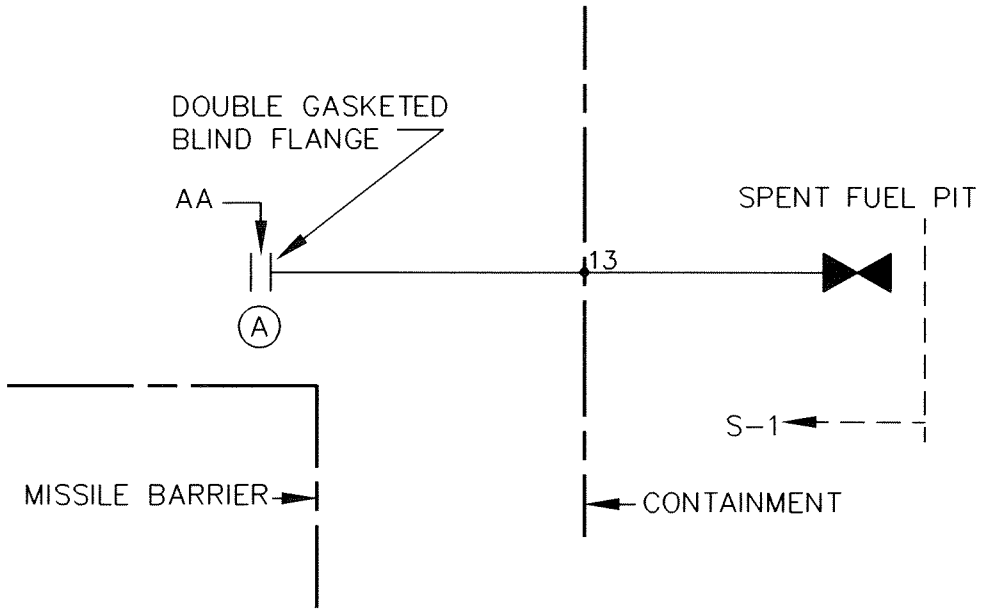

INDIAN POINT UNIT No. 2	
UFSAR FIGURE 5.2-5 CONTAINMENT ISOLATION SYSTEM PENETRATION SCHEMATICS	
MIC. No. 1999MC3386	REV. No. 17A
VALVE POSITIONS ARE NOT CONTROLLED BY THIS FIGURE	

ITEM 14 CONTAINMENT SPRAY HEADERS

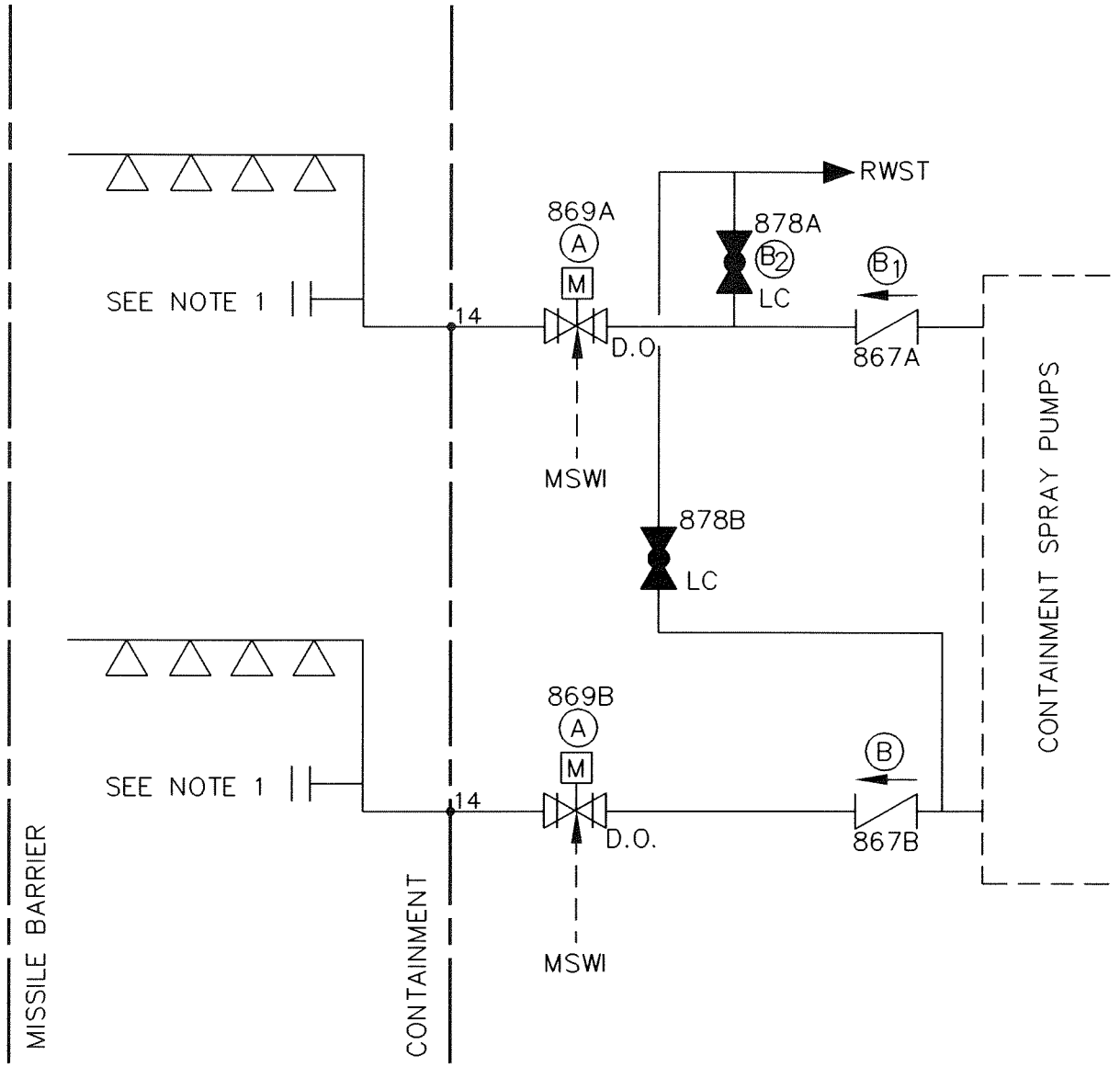

RWST – REFUELING WATER STORAGE TANK

ENTIRE SYSTEM SHOWN IS SEISMIC CLASS 1 DESIGN

NOTE 1:
FLANGED ELBOW USED DURING REFUELING OPERATIONS TO FILL REACTOR REFUELING CAVITY AND CANAL

INDIAN POINT UNIT No. 2	
UFSAR FIGURE 5.2-6 CONTAINMENT ISOLATION SYSTEM PENETRATION SCHEMATICS	
MIC. No. 1999MC3387	REV. No. 17A
VALVE POSITIONS ARE NOT CONTROLLED BY THIS FIGURE	

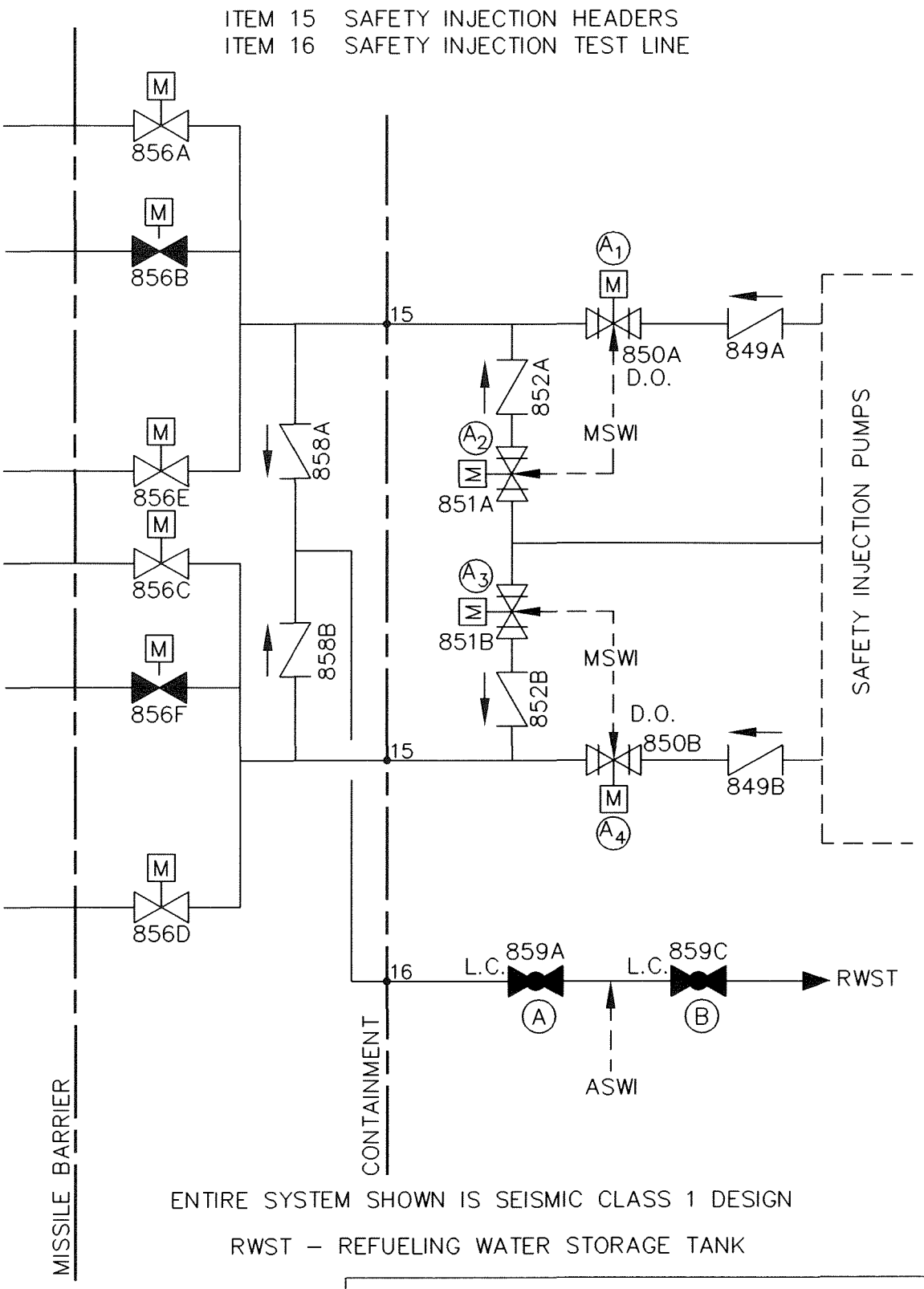

ENTIRE SYSTEM SHOWN IS SEISMIC CLASS 1 DESIGN

RWST – REFUELING WATER STORAGE TANK

INDIAN POINT UNIT No. 2	
UFSAR FIGURE 5.2–7	
CONTAINMENT ISOLATION SYSTEM PENETRATION SCHEMATICS	
MIC. No. 1999MC3388	REV. No. 17A
VALVE POSITIONS ARE NOT CONTROLLED BY THIS FIGURE	

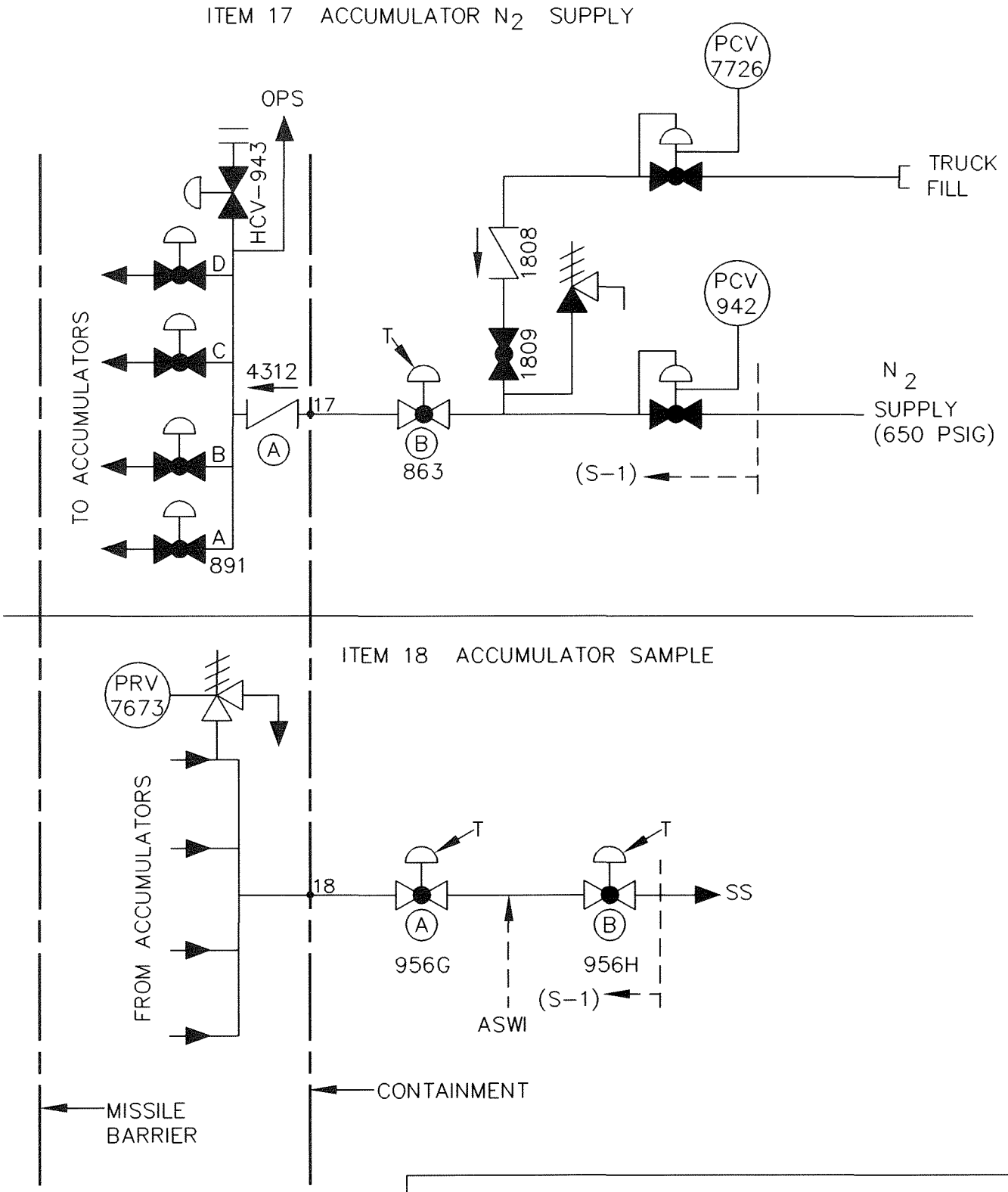

INDIAN POINT UNIT No. 2	
UFSAR FIGURE 5.2-8 CONTAINMENT ISOLATION SYSTEM PENETRATION SCHEMATICS	
MIC. No. 1999MC3389	REV. No. 17A
VALVE POSITIONS ARE NOT CONTROLLED BY THIS FIGURE	

ITEM 19 PRIMARY SYSTEM VENT HEADER AND N_2 SUPPLY LINE
ITEM 20 REACTOR COOLANT DRAIN TANK TO GAS ANALYZER
ITEM 21 RCDT PUMP DISCHARGE

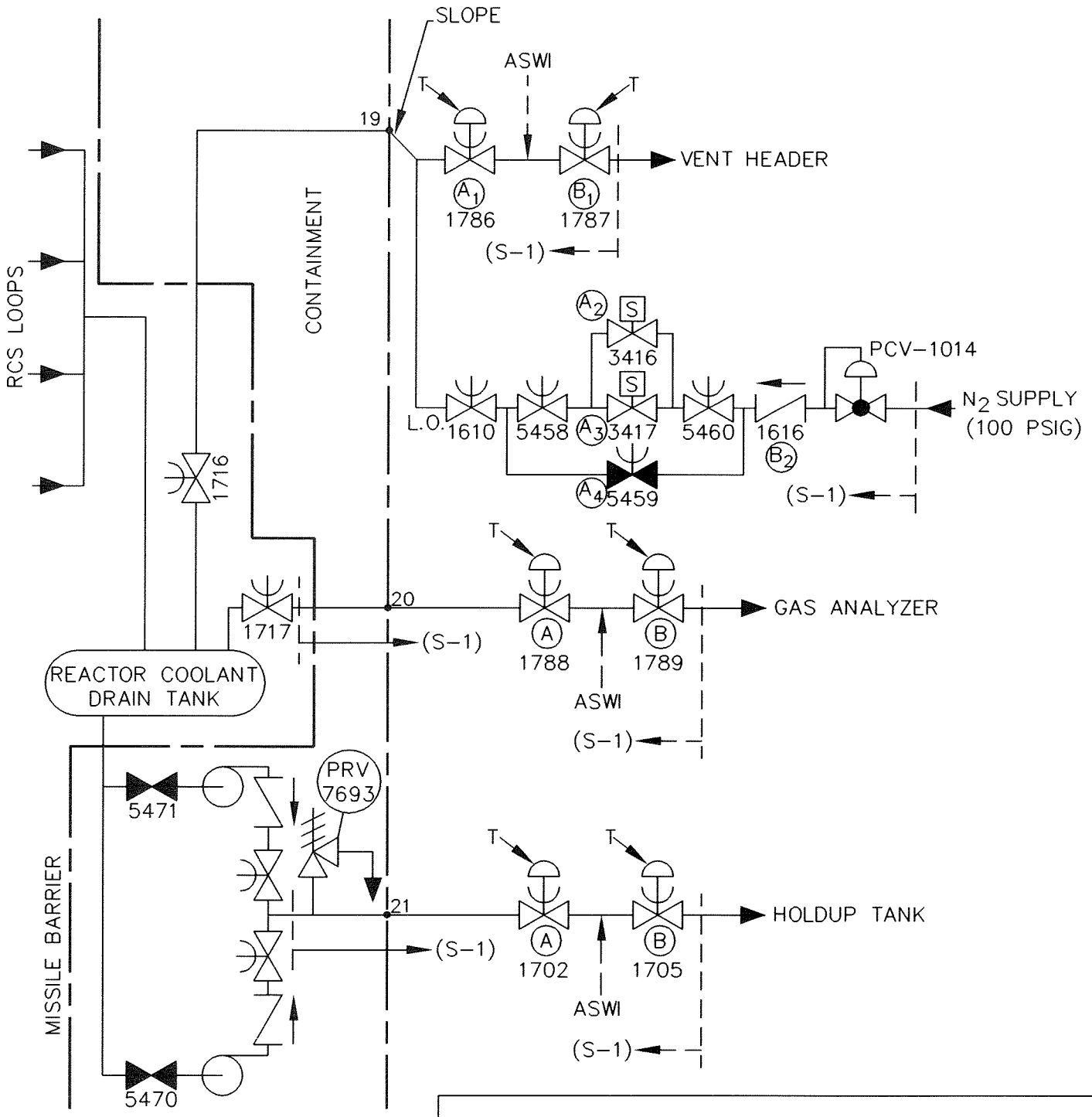

INDIAN POINT UNIT No. 2	
UFSAR FIGURE 5.2-9 CONTAINMENT ISOLATION SYSTEM PENETRATION SCHEMATICS	
MIC. No. 1999MC3390	REV. No. 17A
VALVE POSITIONS ARE NOT CONTROLLED BY THIS FIGURE	

ITEM 22 REACTOR COOLANT PUMP COOLING WATER IN

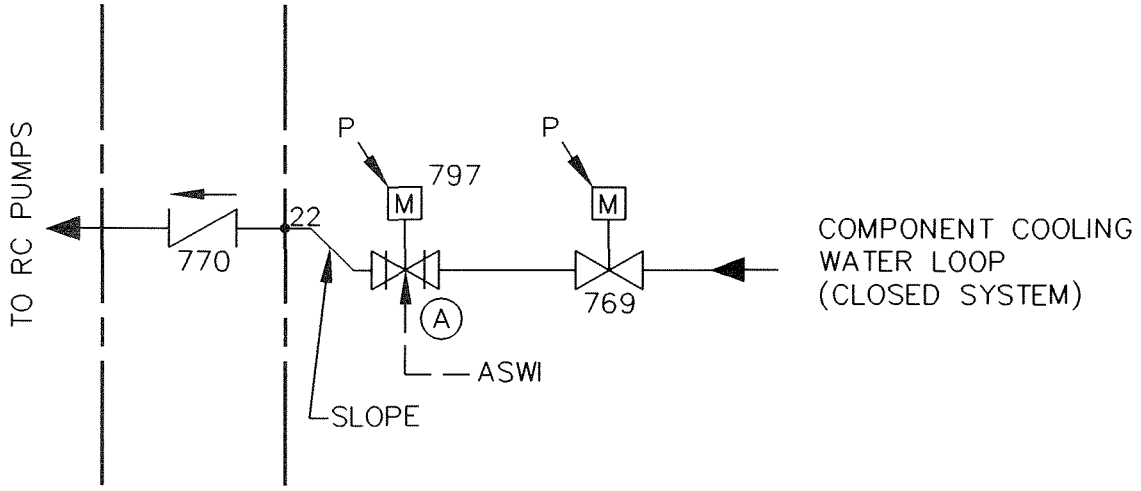

ITEM 23 REACTOR COOLANT PUMP WATER OUT (6 in.)

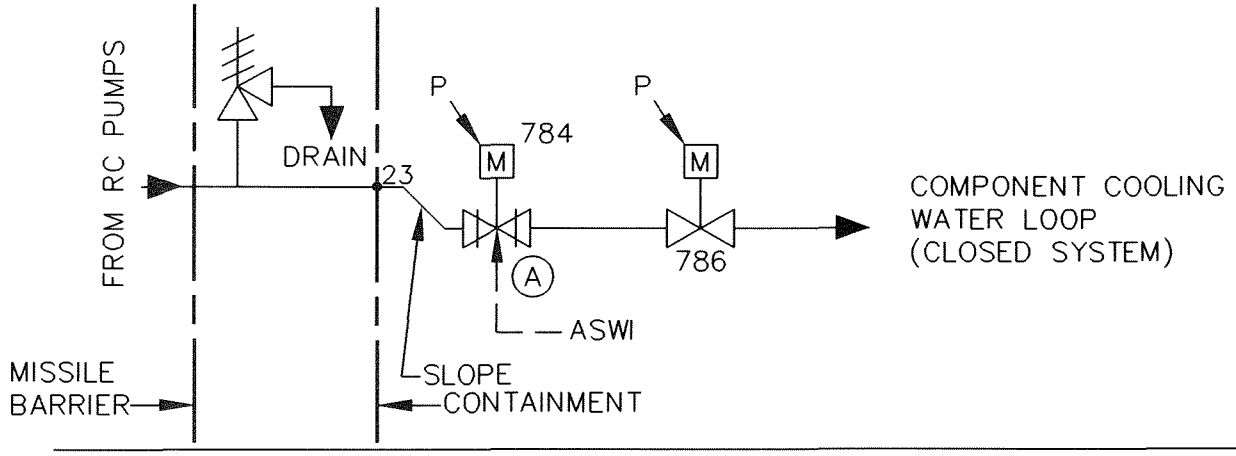

ITEM 24 REACTOR COOLANT PUMP COOLING WATER OUT (3 in.)

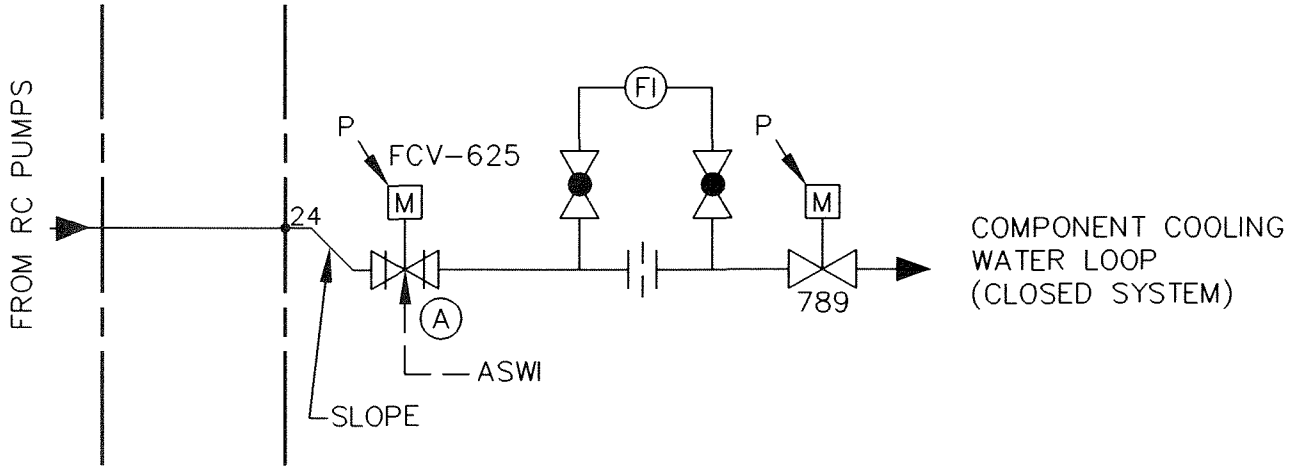

ENTIRE COMPONENT COOLING WATER SYSTEM IS SEISMIC CLASS 1 DESIGN

INDIAN POINT UNIT No. 2	
UFSAR FIGURE 5.2-10 CONTAINMENT ISOLATION SYSTEM PENETRATION SCHEMATICS	
MIC. No. 1999MC3391	REV. No. 17A
VALVE POSITIONS ARE NOT CONTROLLED BY THIS FIGURE	

ITEM 25 RESIDUAL HEAT EXCHANGER COOLING WATER IN

ITEM 26 RESIDUAL HEAT EXCHANGER COOLING WATER RETURN

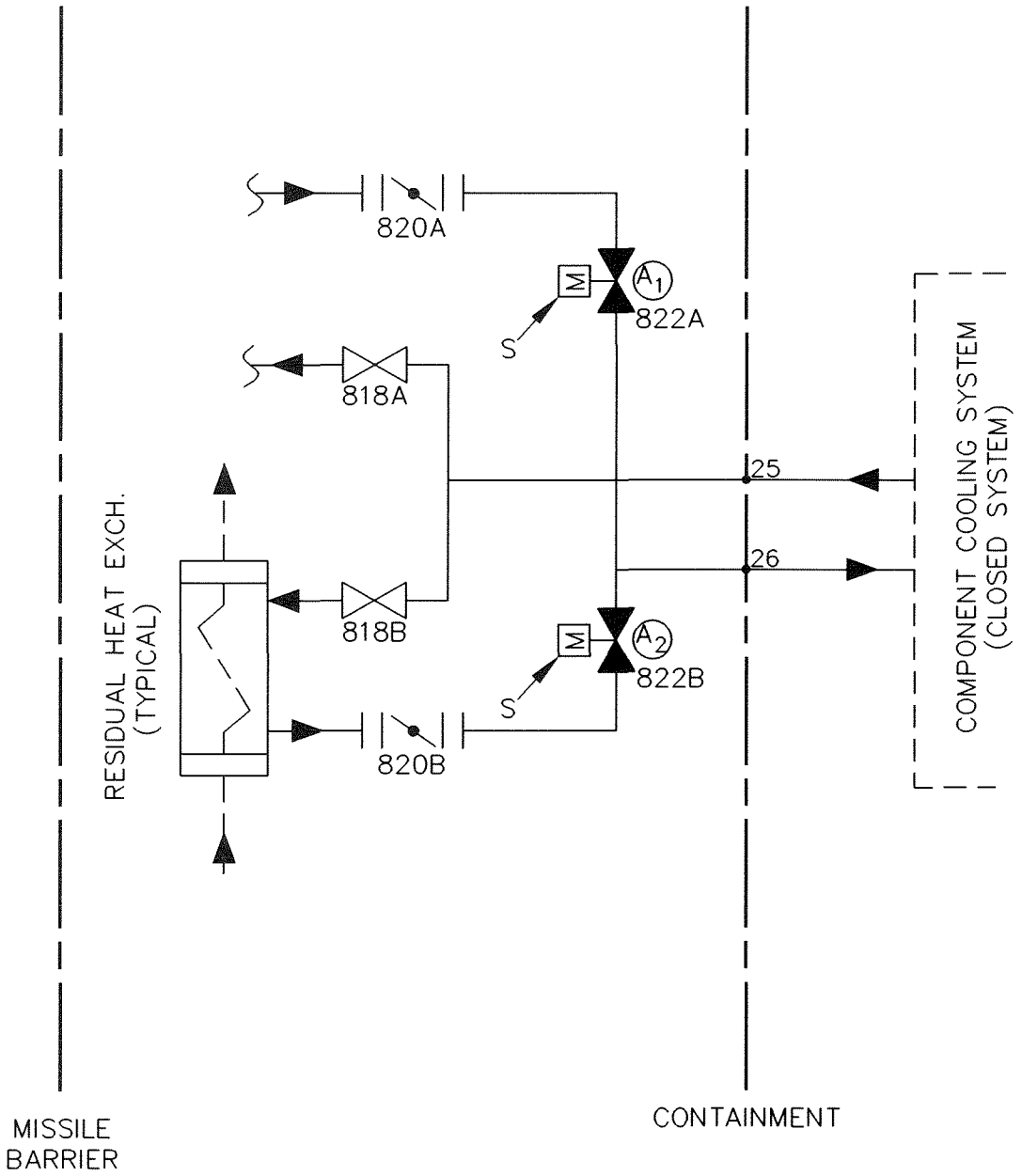

ENTIRE SYSTEM SHOWN IS SEISMIC CLASS 1 DESIGN
S – OPEN S.I. SIGNAL, PHASE A

INDIAN POINT UNIT No. 2	
UFSAR FIGURE 5.2–11 CONTAINMENT ISOLATION SYSTEM PENETRATION SCHEMATICS	
MIC. No. 1999MC3392	REV. No. 17A
VALVE POSITIONS ARE NOT CONTROLLED BY THIS FIGURE	

ITEM 27 RECIRCULATION PUMP COOLING WATER SUPPLY
ITEM 28 RECIRCULATION PUMP COOLING WATER RETURN

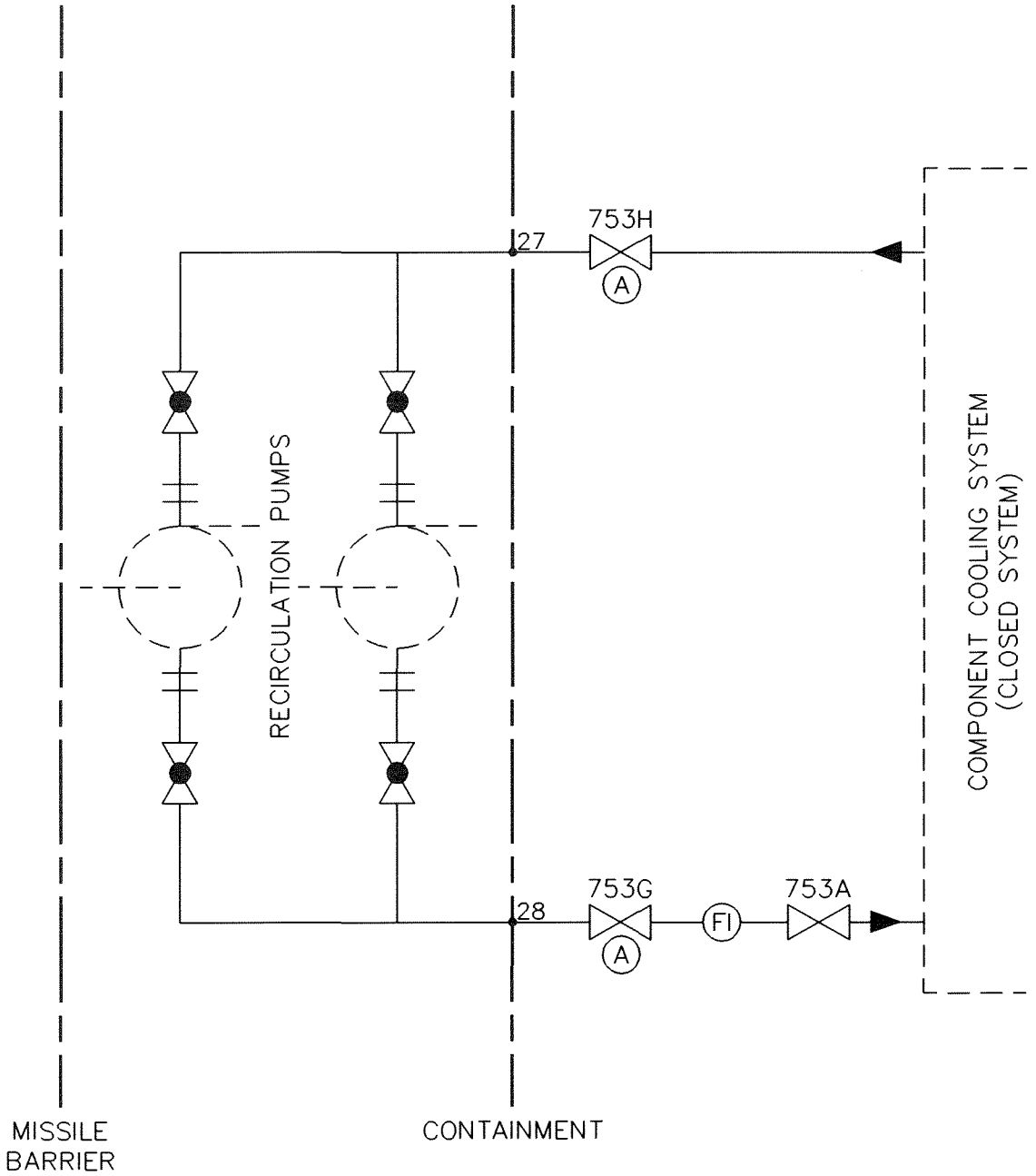

ENTIRE COMPONENT COOLING SYSTEM IS SEISMIC CLASS 1 DESIGN

INDIAN POINT UNIT No. 2	
UFSAR FIGURE 5.2-12 CONTAINMENT ISOLATION SYSTEM PENETRATION SCHEMATICS	
MIC. No. 1999MC3393	REV. No. 17A
VALVE POSITIONS ARE NOT CONTROLLED BY THIS FIGURE	

ITEM 29 EXCESS LETDOWN HEAT EXCHANGER COOLING WATER IN
ITEM 30 EXCESS LETDOWN HEAT EXCHANGER COOLING WATER OUT
ITEM 31 CONTAINMENT SUMP PUMP DISCHARGE
ITEM 31A SAMPLING SYSTEM RETURN TO CONTAINMENT SUMP

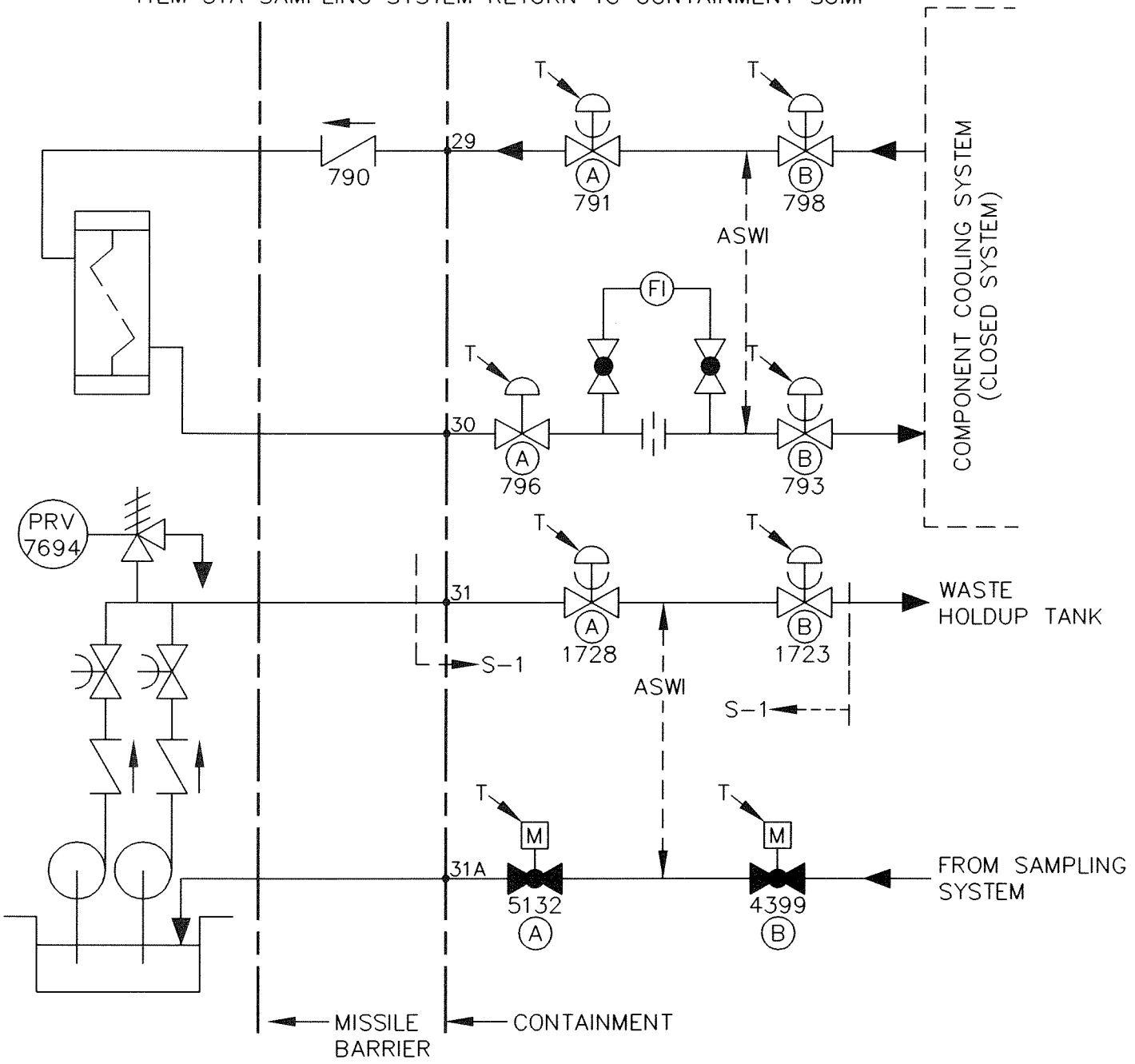

ENTIRE COMPONENT COOLING SYSTEM IS SEISMIC CLASS 1 DESIGN

INDIAN POINT UNIT No. 2	
UFSAR FIGURE 5.2-13 CONTAINMENT ISOLATION SYSTEM PENETRATION SCHEMATICS	
MIC. No. 1999MC3394	REV. No. 17A
VALVE POSITIONS ARE NOT CONTROLLED BY THIS FIGURE	

ITEM 32 CONTAINMENT AIR SAMPLE IN

ITEM 33 CONTAINMENT AIR SAMPLE OUT

ITEM 34 AIR EJECTOR DISCHARGE TO CONTAINMENT

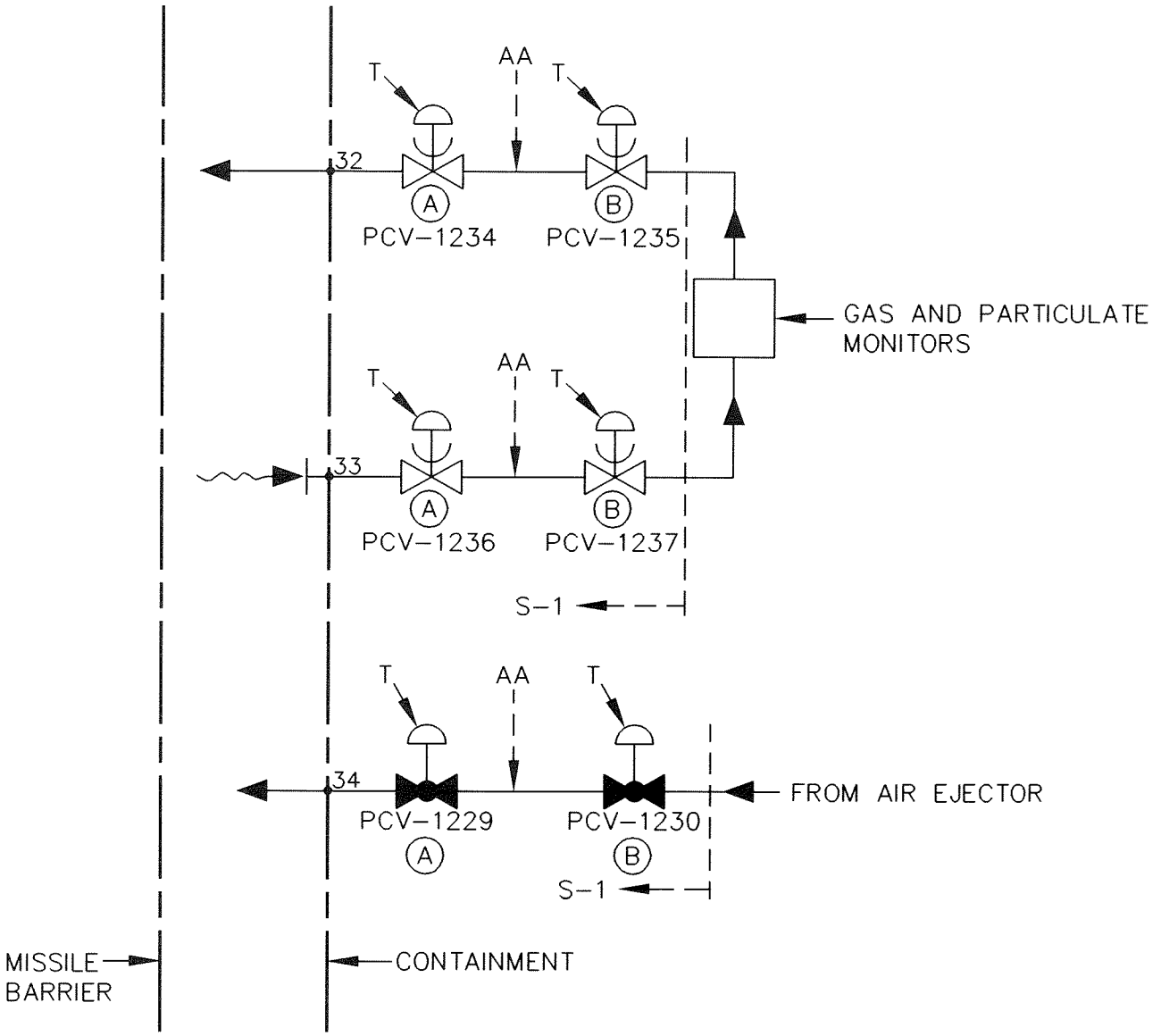

AA – AUTOMATIC PRESSURIZATION WITH AIR FROM PENETRATION PRESSURIZATION SYSTEM

INDIAN POINT UNIT No. 2	
UFSAR FIGURE 5.2-14 CONTAINMENT ISOLATION SYSTEM PENETRATION SCHEMATICS	
MIC. No. 1999MC3395	REV. No. 17A
VALVE POSITIONS ARE NOT CONTROLLED BY THIS FIGURE	

ITEM 37 STEAM GENERATOR BLOWDOWN/SAMPLE (4 PENETRATIONS)

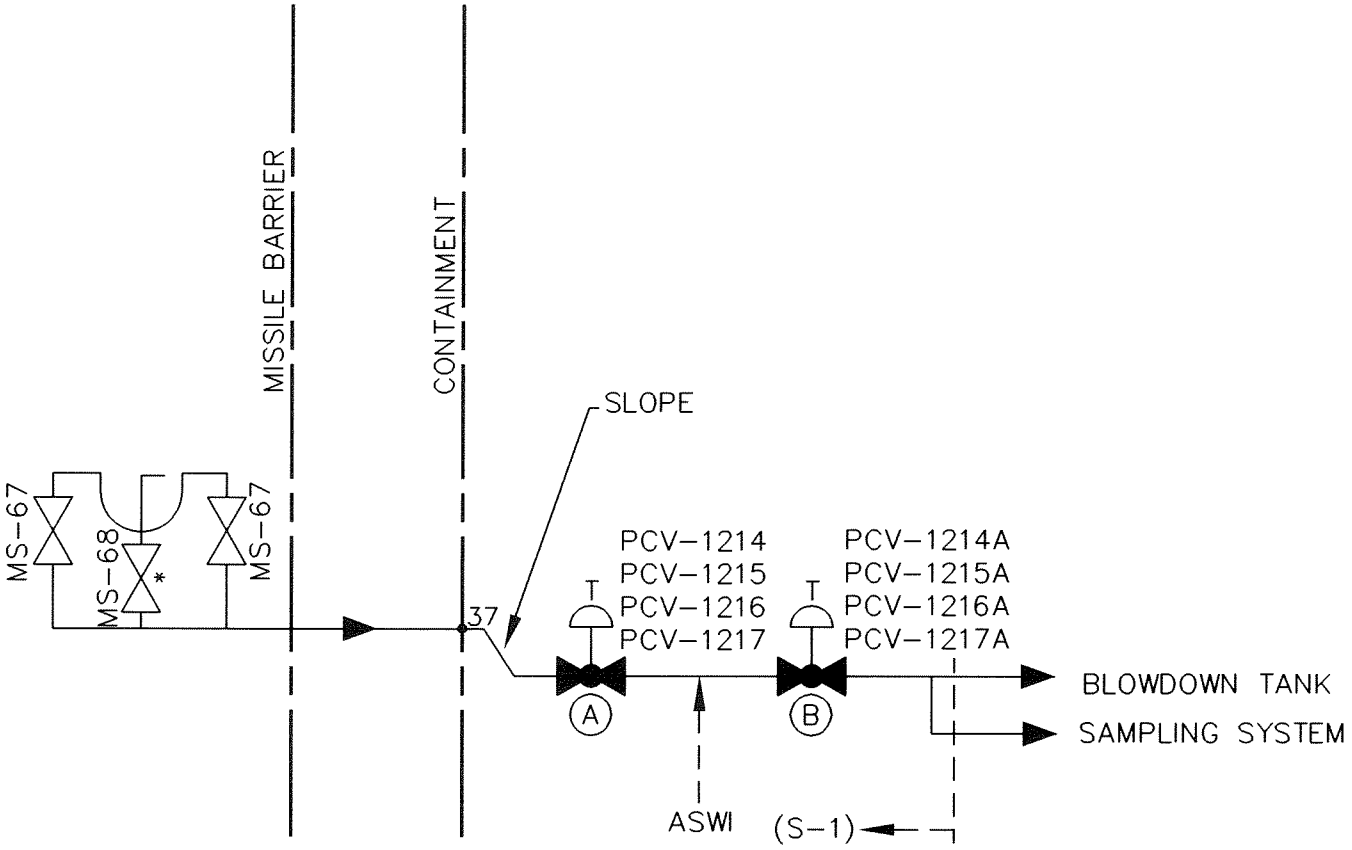

* THIS DRAIN LINE HAS BEEN REMOVED ON STEAM GENERATOR 21

INDIAN POINT UNIT No. 2	
UFSAR FIGURE 5.2-15 CONTAINMENT ISOLATION SYSTEM PENETRATION SCHEMATICS	
MIC. No. 1999MC3396	REV. No. 17A
VALVE POSITIONS ARE NOT CONTROLLED BY THIS FIGURE	

ITEM 39 10" VENTILATION SYSTEM COOLING WATER IN (5)
ITEM 40 10" VENTILATION SYSTEM COOLING WATER OUT (5)
ITEM 40A 2" VENTILATION SYSTEM MOTOR COOLING WATER OUT (5)

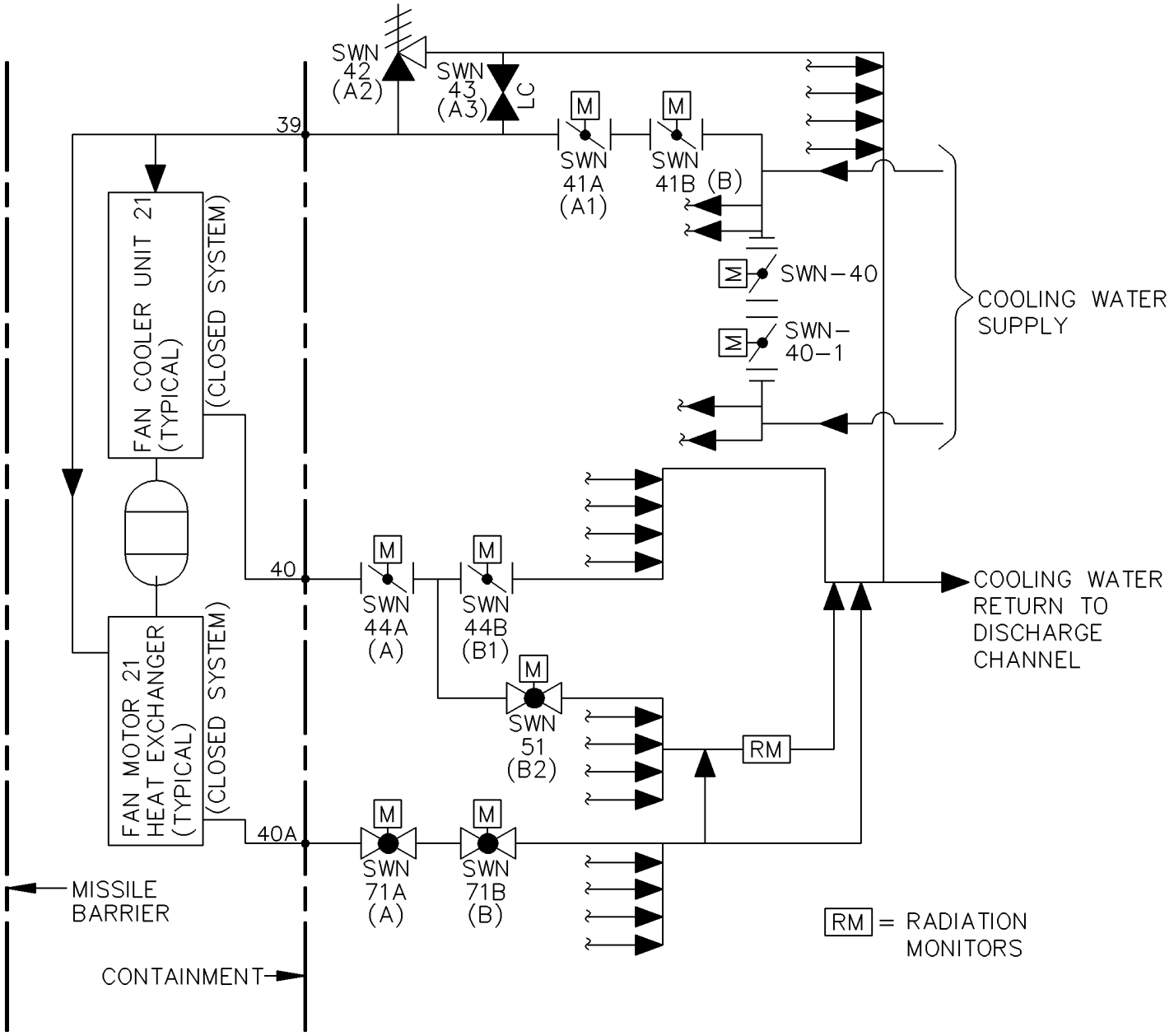

ENTIRE SYSTEM SHOWN IS SEISMIC CLASS 1 DESIGN
ALL MOV'S ARE DEENERGIZED OPEN

PLANT MANAGEMENT MAY DESIGNATE THE "A" OR THE "B" VALVE(S) IN THE 41, 44 AND 71 SERIES AS THE REQUIRED CONTAINMENT ISOLATION VALVE(S). DESIGNATION OF THE "B" VALVE(S) IN THE SWN-44 SERIES REQUIRES THE CODESIGNATION OF THE RESPECTIVE 51 SERIES VALVE(S) AS ADDITIONAL REQUIRED CONTAINMENT ISOLATION VALVE(S). CONTAINMENT ISOLATION VALVE SURVEILLANCE REQUIREMENTS MUST HAVE BEEN SATISFIED FOR THE DESIGNATED VALVE(S).

INDIAN POINT UNIT No. 2	
UFSAR FIGURE 5.2-16 CONTAINMENT ISOLATION SYSTEM PENETRATION SCHEMATICS	
MIC. No. 1999MC3397	REV. No. 17B
VALVE POSITIONS ARE NOT CONTROLLED BY THIS FIGURE	

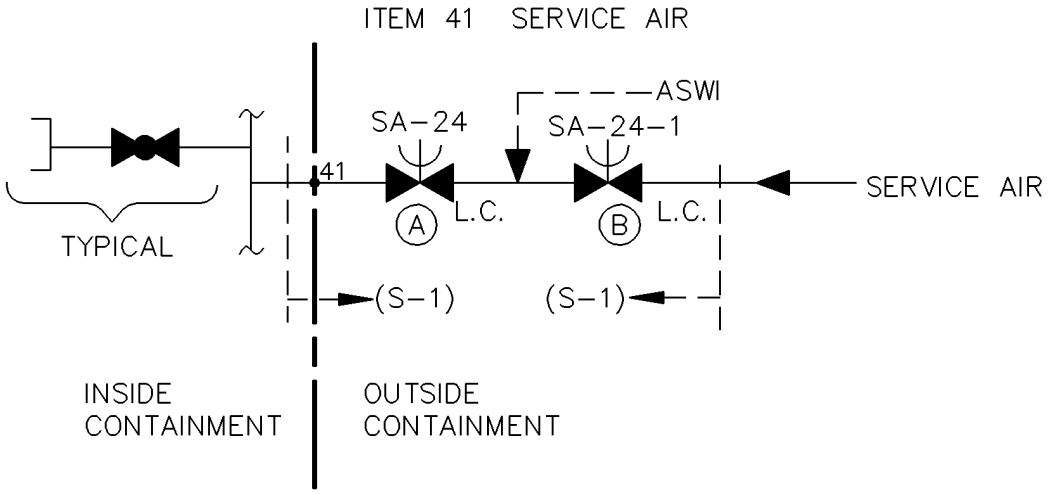

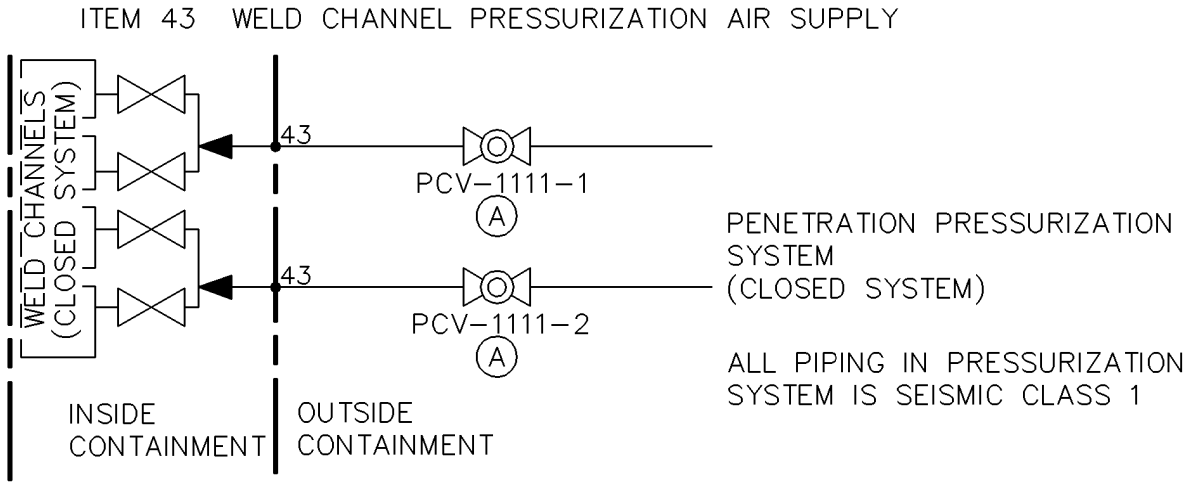

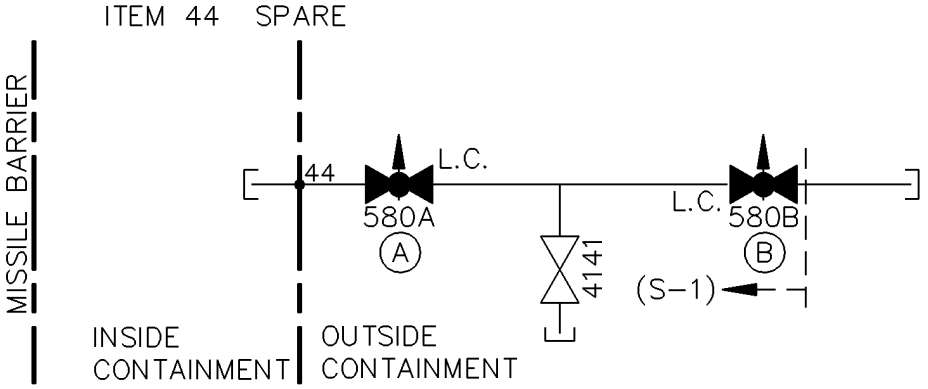

INDIAN POINT UNIT No. 2	
UFSAR FIGURE 5.2-17 CONTAINMENT ISOLATION SYSTEM PENETRATION SCHEMATICS	
MIC. No. 1999MC3398	REV. No. 17B
VALVE POSITIONS ARE NOT CONTROLLED BY THIS FIGURE	

ITEM 45 AUXILIARY STEAM SUPPLY

ITEM 46 AUXILIARY STEAM CONDENSATE RETURN

ITEM 47 CITY WATER

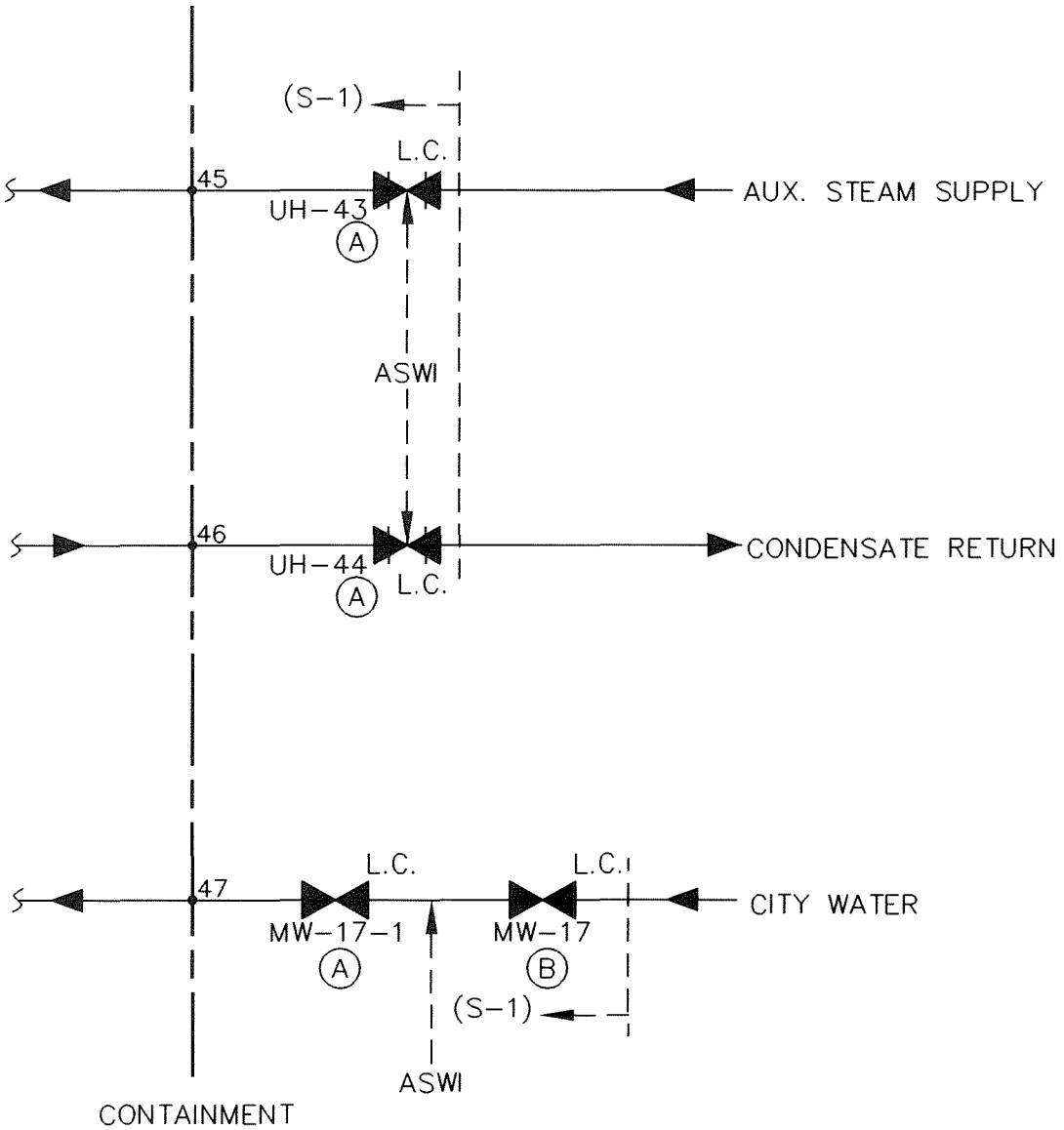

INDIAN POINT UNIT No. 2	
UFSAR FIGURE 5.2-18 CONTAINMENT ISOLATION SYSTEM PENETRATION SCHEMATICS	
MIC. No. 1999MC3399	REV. No. 17A
VALVE POSITIONS ARE NOT CONTROLLED BY THIS FIGURE	

ITEM 48 PURGE SUPPLY DUCT
ITEM 49 PURGE EXHAUST DUCT

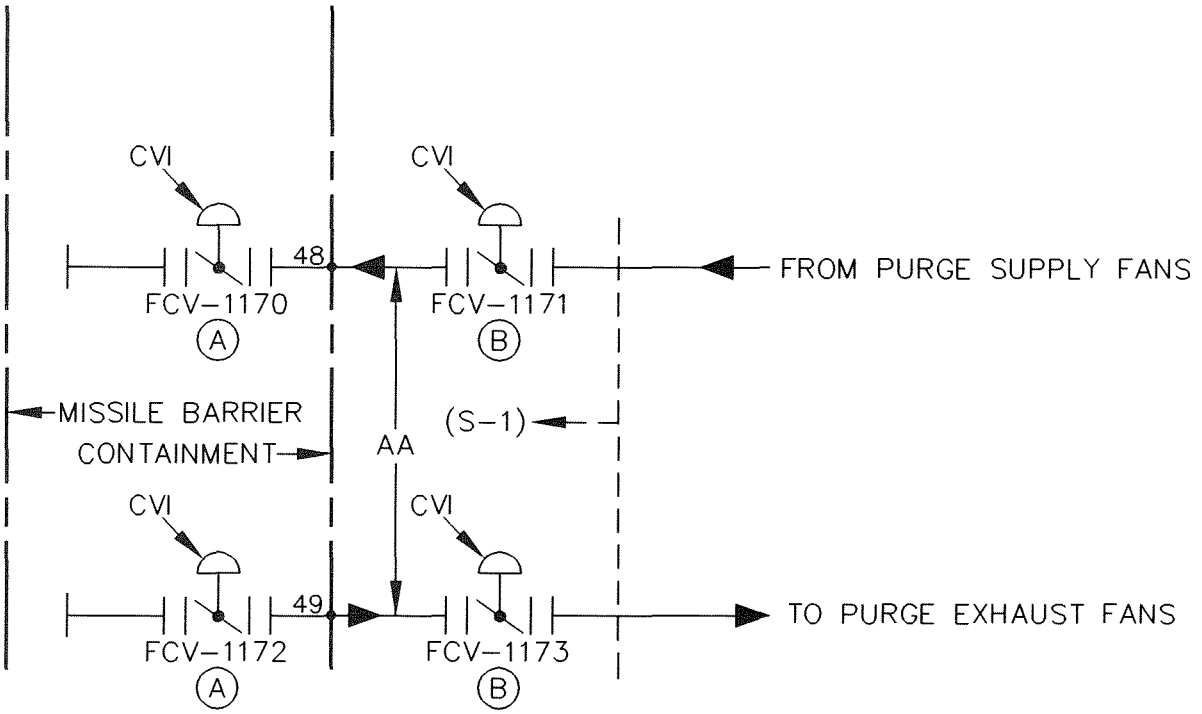

ITEM 50 CONTAINMENT PRESSURE RELIEF

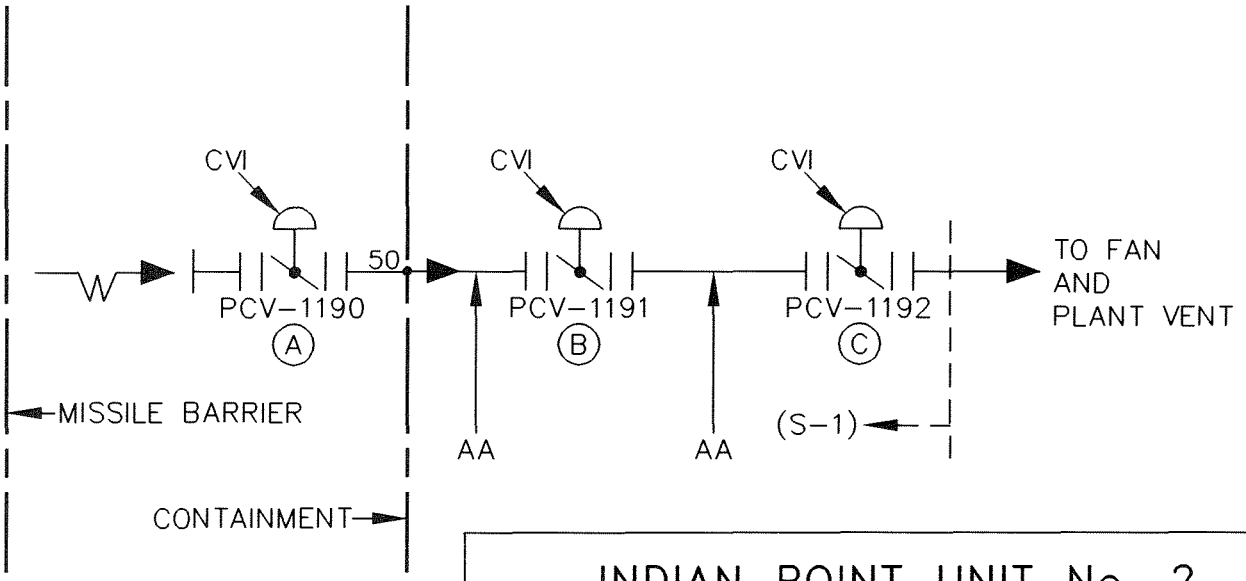

INDIAN POINT UNIT No. 2	
UFSAR FIGURE 5.2-19 CONTAINMENT ISOLATION SYSTEM PENETRATION SCHEMATICS	
MIC. No. 1999MC3400	REV. No. 17A
VALVE POSITIONS ARE NOT CONTROLLED BY THIS FIGURE	

ITEM 51 RECIRCULATION PUMP DISCHARGE SAMPLE LINE

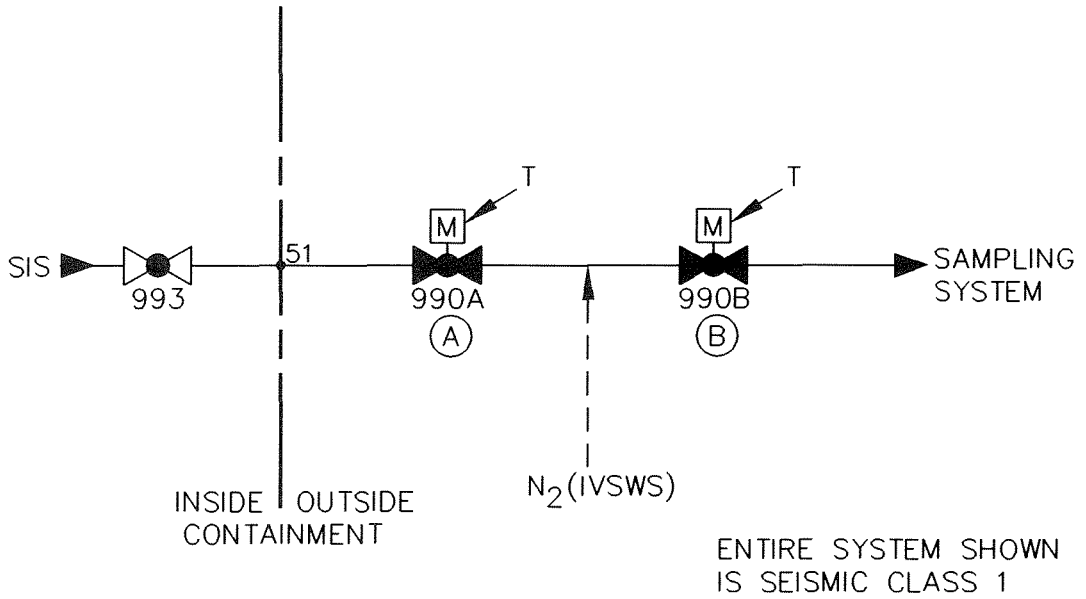

ITEM 52 PRESSURIZER STEAM SPACE SAMPLE

ITEM 53 PRESSURIZER LIQUID SPACE SAMPLE

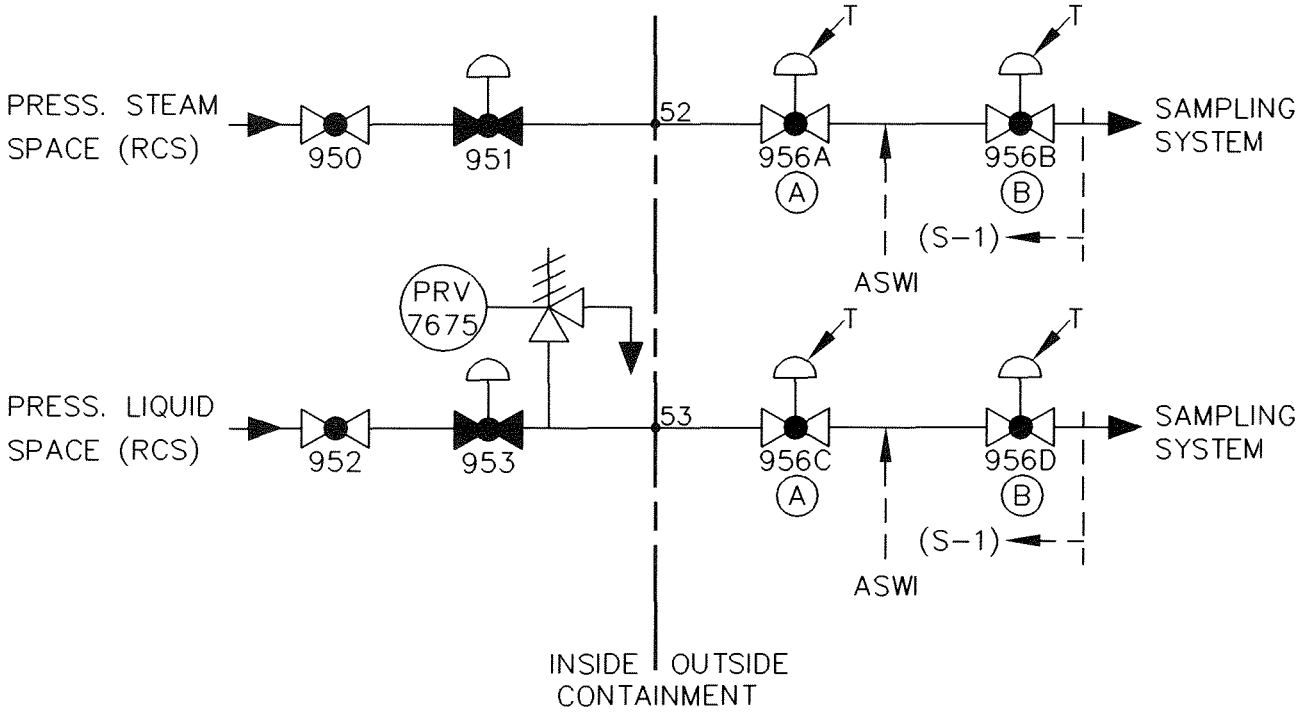

INDIAN POINT UNIT No. 2	
UFSAR FIGURE 5.2-20 CONTAINMENT ISOLATION SYSTEM PENETRATION SCHEMATICS	
MIC. No. 1999MC3401	REV. No. 17A
VALVE POSITIONS ARE NOT CONTROLLED BY THIS FIGURE	

ITEMS 54, 55, AND 56 CONTAINMENT PRESSURE INSTRUMENTATION LINES

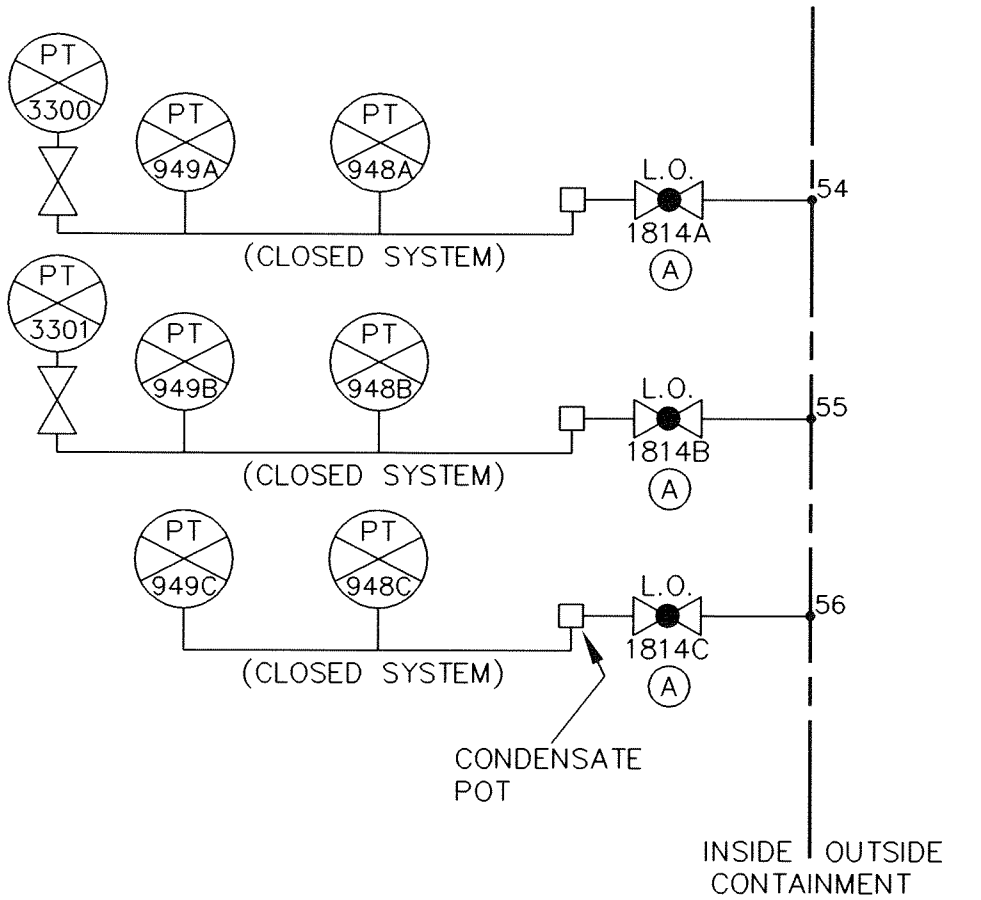

ENTIRE SYSTEM SHOWN
IS SEISMIC CLASS 1

INDIAN POINT UNIT No. 2	
UFSAR FIGURE 5.2-21 CONTAINMENT ISOLATION SYSTEM PENETRATION SCHEMATICS	
MIC. No. 1999MC3402	REV. No. 17A
VALVE POSITIONS ARE NOT CONTROLLED BY THIS FIGURE	

ITEM 57 POSTACCIDENT CONTAINMENT SAMPLING LINES (SUPPLY AND RETURN)

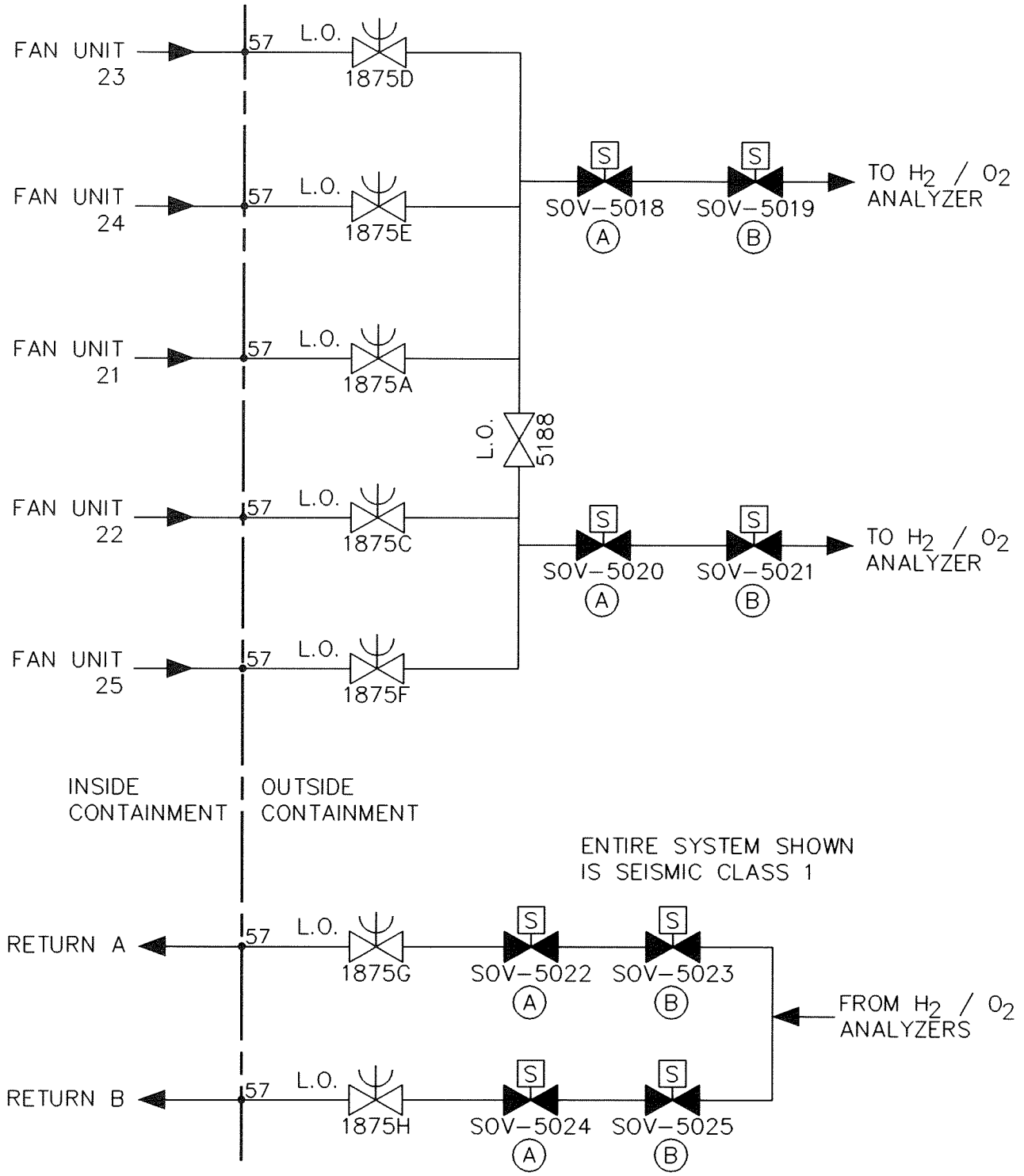

INDIAN POINT UNIT No. 2	
UFSAR FIGURE 5.2-22 CONTAINMENT ISOLATION SYSTEM PENETRATION SCHEMATICS	
MIC. No. 1999MC3403	REV. No. 17A
VALVE POSITIONS ARE NOT CONTROLLED BY THIS FIGURE	

ITEM 58 SPARE

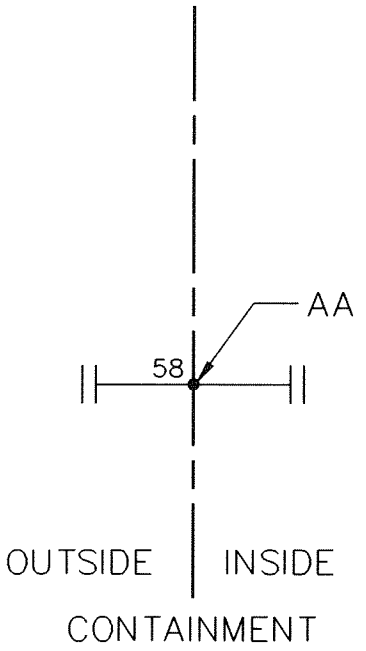

INDIAN POINT UNIT No. 2	
UFSAR FIGURE 5.2-23 CONTAINMENT ISOLATION SYSTEM PENETRATION SCHEMATICS	
MIC. No. 1999MC3404	REV. No. 17A
VALVE POSITIONS ARE NOT CONTROLLED BY THIS FIGURE	

ITEMS 59, 60, 61, and 62 SPARE

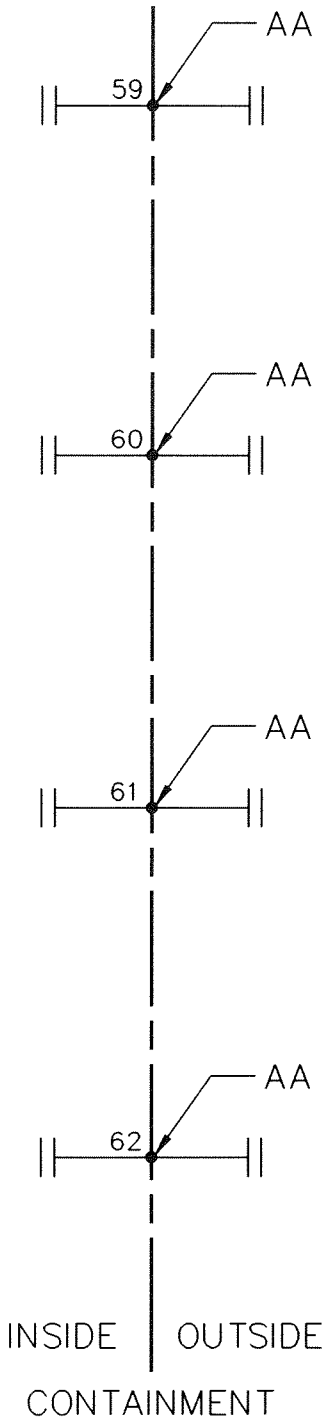

INDIAN POINT UNIT No. 2	
UFSAR FIGURE 5.2-24 CONTAINMENT ISOLATION SYSTEM PENETRATION SCHEMATICS	
MIC. No. 1999MC3405	REV. No. 17A
VALVE POSITIONS ARE NOT CONTROLLED BY THIS FIGURE	

POSTACCIDENT (P.A.) CONTAINMENT VENTING SYSTEM

ITEM 64 INSTRUMENT AIR/P.A. VENTING SUPPLY LINE

ITEM 65 P.A. VENTING EXHAUST LINE

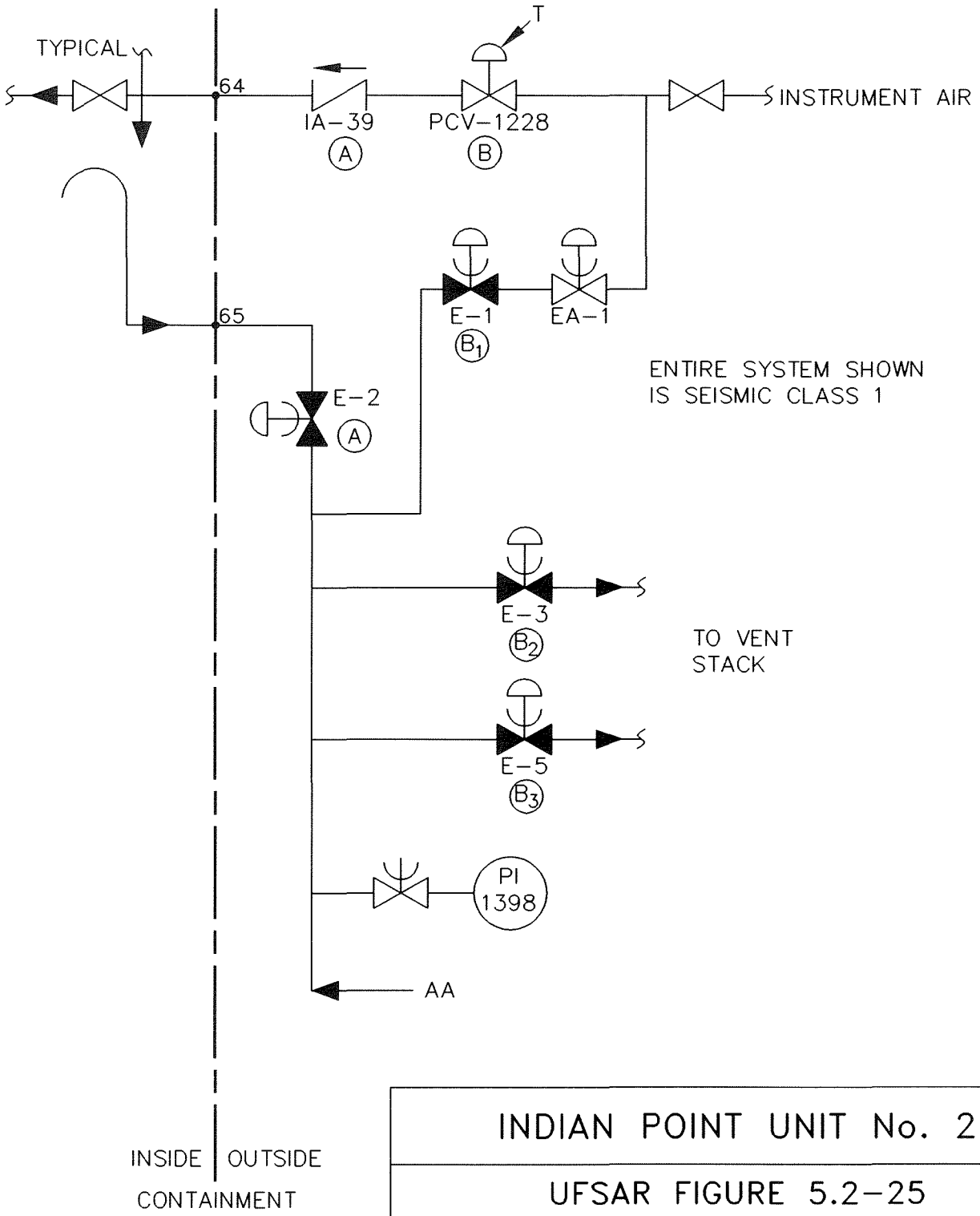

INDIAN POINT UNIT No. 2	
UFSAR FIGURE 5.2-25 CONTAINMENT ISOLATION SYSTEM PENETRATION SCHEMATICS	
MIC. No. 1999MC3406	REV. No. 17A
VALVE POSITIONS ARE NOT CONTROLLED BY THIS FIGURE	

ITEM 66 DELETED

ITEM 67 CONTAINMENT LEAK TEST AIR LINE (2)

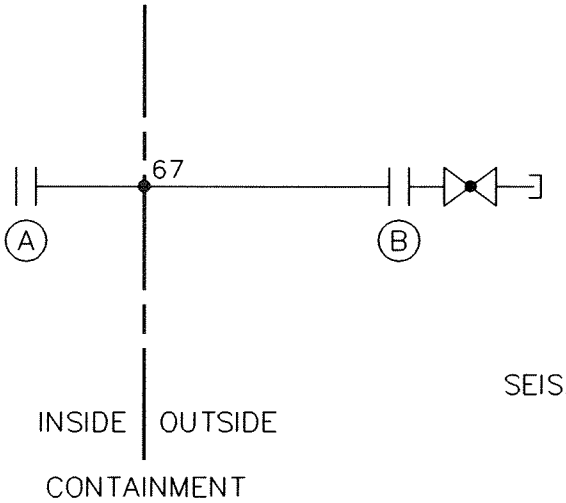

SEISMIC CLASS 1

INDIAN POINT UNIT No. 2	
UFSAR FIGURE 5.2-26 CONTAINMENT ISOLATION SYSTEM PENETRATION SCHEMATICS	
MIC. No. 1999MC3407	REV. No. 17A
VALVE POSITIONS ARE NOT CONTROLLED BY THIS FIGURE	

ITEM 69 PERSONNEL AIR LOCK (2)

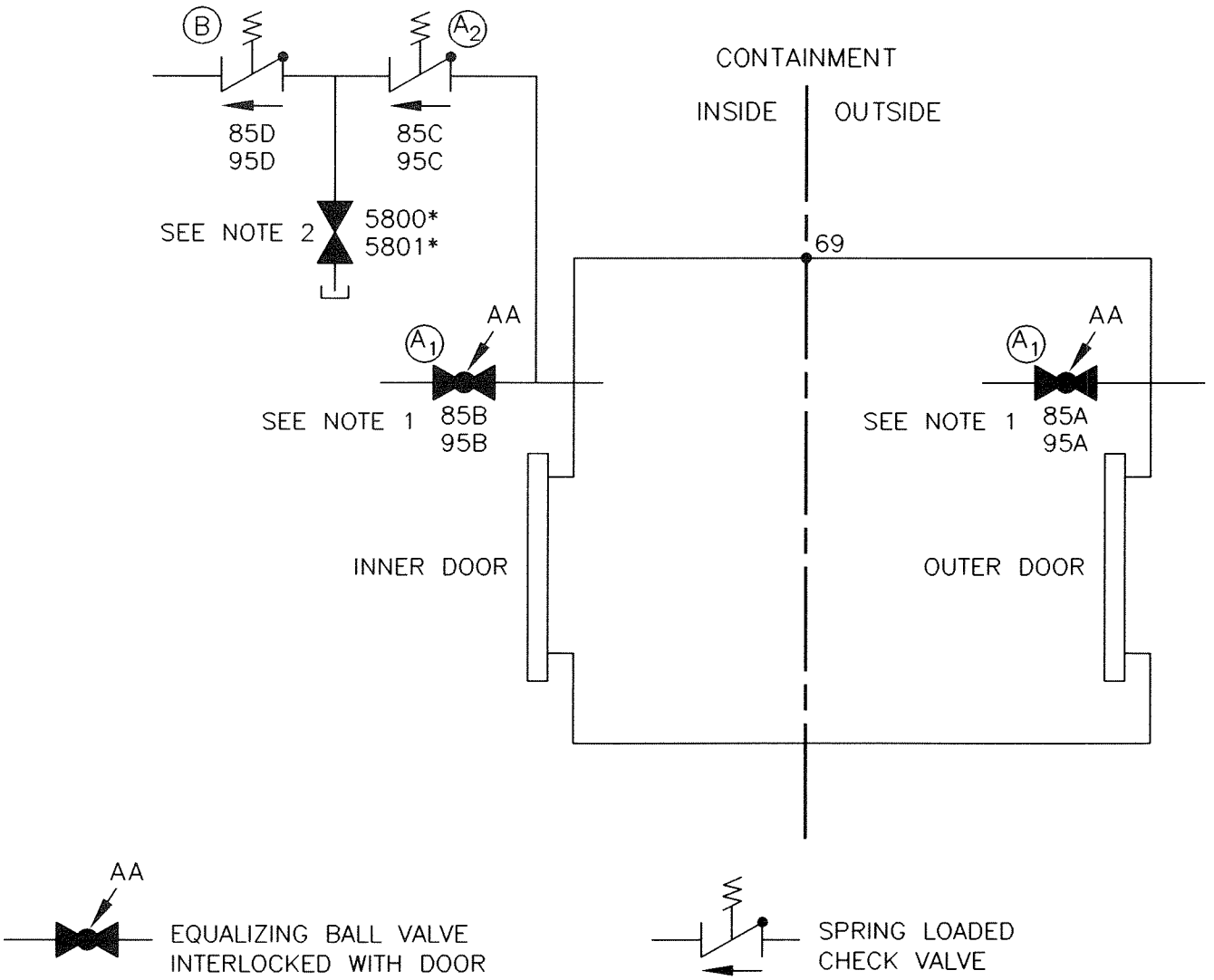

ENTIRE SYSTEM SHOWN IS SEISMIC CLASS 1 DEISGN

NOTE 1 : 85A & 95A MAY BE OPEN WHEN 85B & 95B ARE CLOSED.
85B & 95B MAY BE OPEN WHEN 85A & 95A ARE CLOSED.

2 : TEST VALVES 5800 & 5801 ARE LOCATED AT 83 FT. & 95 FT. AIRLOCKS RESPECTIVELY

INDIAN POINT UNIT No. 2	
UFSAR FIGURE 5.2-27 CONTAINMENT ISOLATION SYSTEM PENETRATION SCHEMATICS	
MIC. No. 1999MC3408	REV. No. 17A
VALVE POSITIONS ARE NOT CONTROLLED BY THIS FIGURE	

ITEM 70 STEAM GENERATOR LEVEL INDICATION LINES (2)
PRESURIZER LEVEL INDICATION LINES (1)
PRESSURIZER PRESSURE INDICATION LINES (1)

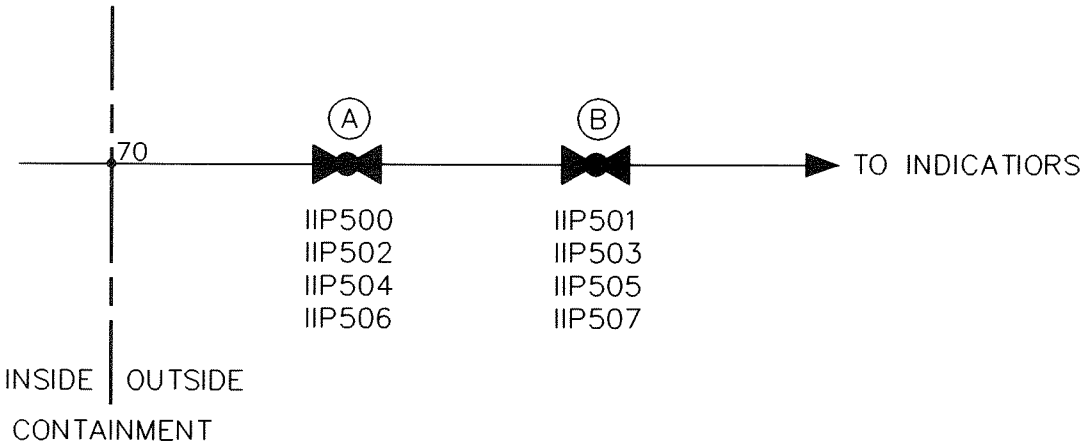

INDIAN POINT UNIT No. 2	
UFSAR FIGURE 5.2-28 CONTAINMENT ISOLATION SYSTEM PENETRATION SCHEMATICS	
MIC. No. 1999MC3409	REV. No. 17A
VALVE POSITIONS ARE NOT CONTROLLED BY THIS FIGURE	

LEGEND FOR SYMBOLS, CONTAINMENT ISOLATION SYSTEM

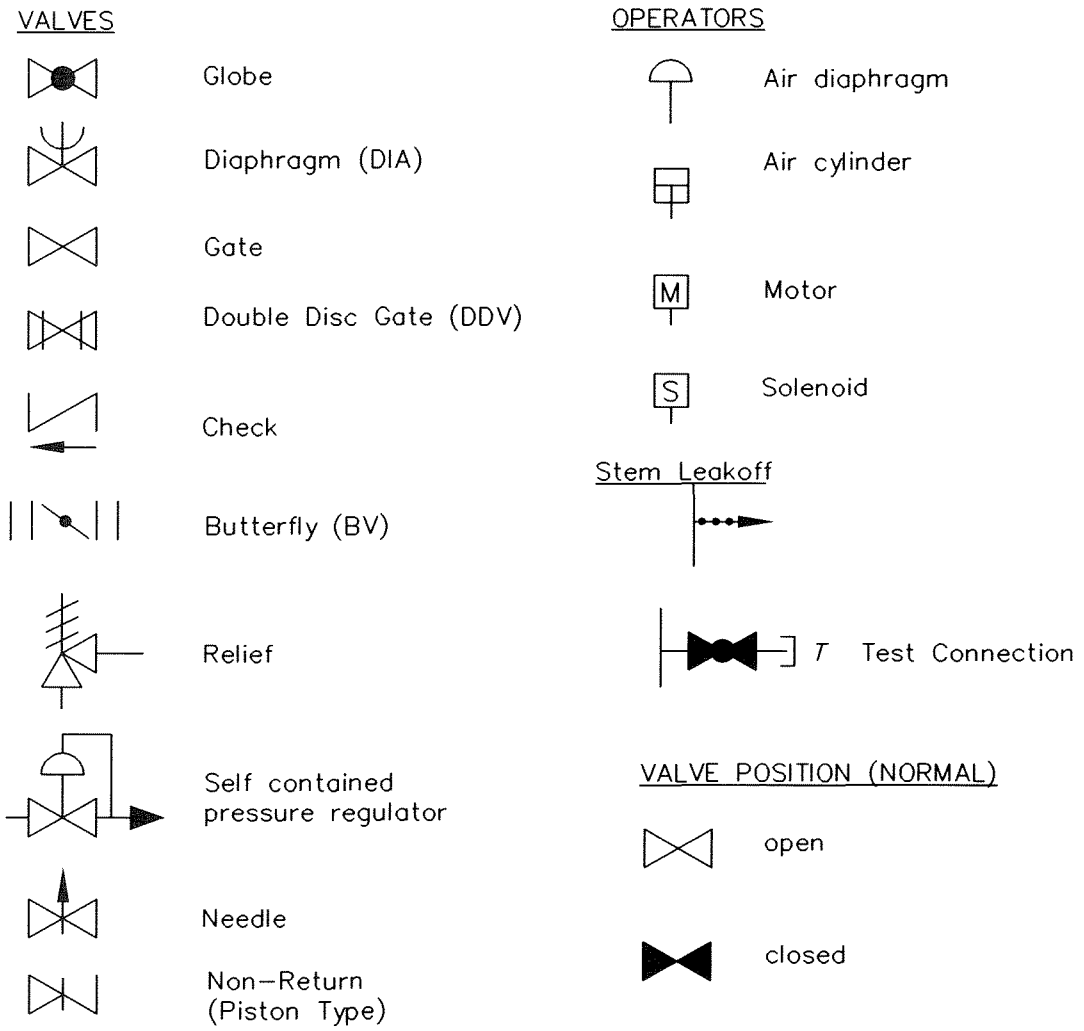

NOTATION

ASWI	–	AUTOMATIC SEAL WATER INJECTION
MSWI	–	MANUAL SEAL WATER INJECTION
AA	–	AUTOMATIC PRESSURIZATION WITH AIR
N_2	–	MANUAL PRESSURIZATION WITH NITROGEN
LO	–	LOCKED OPEN
LC	–	LOCKED CLOSED
P	–	TRIPPED CLOSED BY CONTAINMENT ISOLATION SIGNAL, PHASE A
T	–	TRIPPED CLOSED BY CONTAINMENT ISOLATION SIGNAL, PHASE B
S–1	–	SEISMIC CLASS I
S	–	OPEN S.I. Signal, Phase A
D.O.	–	DEENERGIZED OPEN
CVI	–	CONTAINMENT VENTILATION ISOLATION (AUTOMATIC SIGNAL)
IVSWS	–	ISOLATION VALVE SEAL WATER SYSTEM

INDIAN POINT UNIT No. 2	
UFSAR FIGURE 5.2–29 CONTAINMENT ISOLATION SYSTEM PENETRATION SCHEMATICS	
MIC. No. 1999MC3410	REV. No. 17A
VALVE POSITIONS ARE NOT CONTROLLED BY THIS FIGURE	