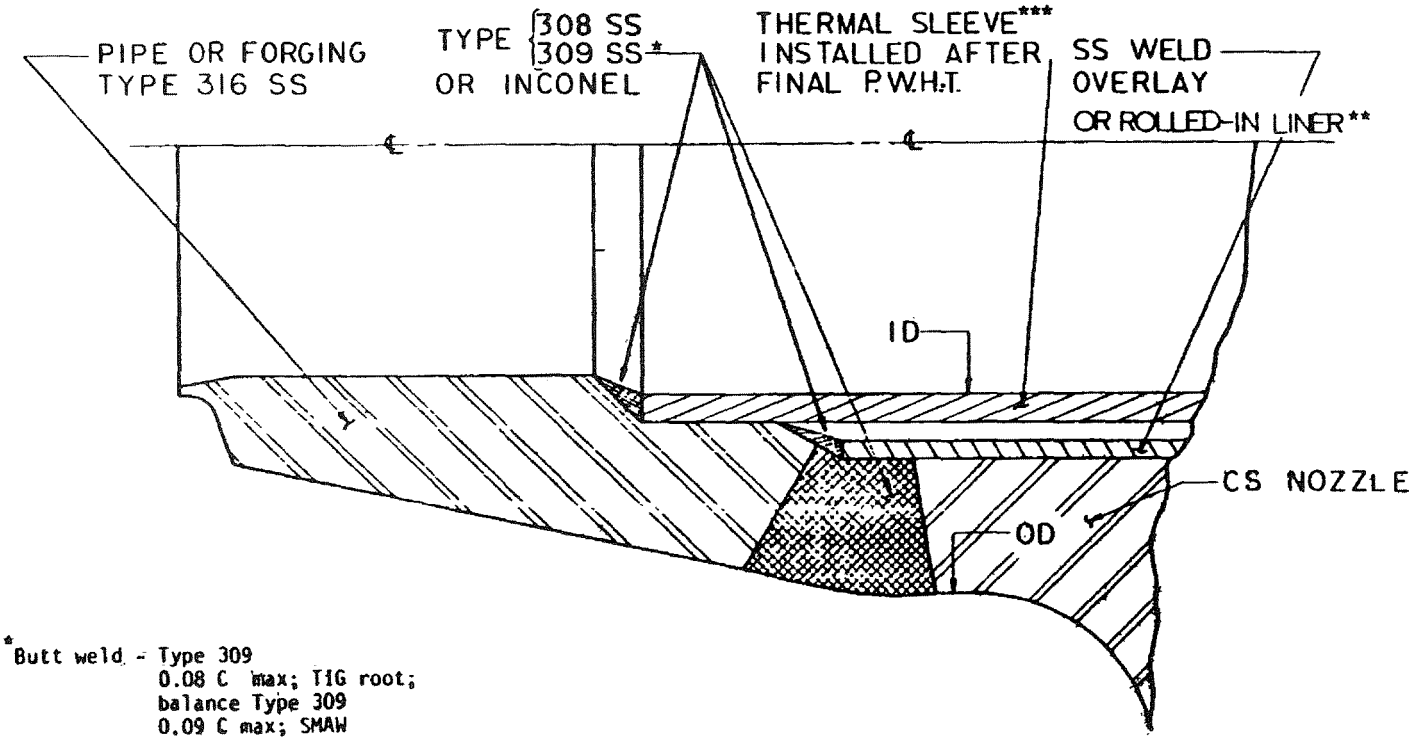

*Butt weld - Type 309
0.08 C max; TIG root;
balance Type 309
0.09 C max; SMAW

Attachment weld of thermal sleeve and rolled-in liner - Type 308 L 0.04 C max; TIG (made after final PWHT)

**Rolled-in liner welded top and bottom for spray, safety, and relief nozzles - Type 309 followed by Type 308 L weld overlay for surge nozzle

***Thermal sleeve welded for 45° of 360°

INDIAN POINT UNIT No. 2	
UFSAR FIGURE 4C-3 SPRAY OR SURGE NOZZLE TAMPA PRESSURIZER	
MIC. No. 1999MC3745	REV. No. 17A

03/25/2003 03:43:48 AM vm4:1999MC3430-1-17B.DWG
Model from the Maine Yankee - Energy Rubber Northeast - Indian Point Energy Center

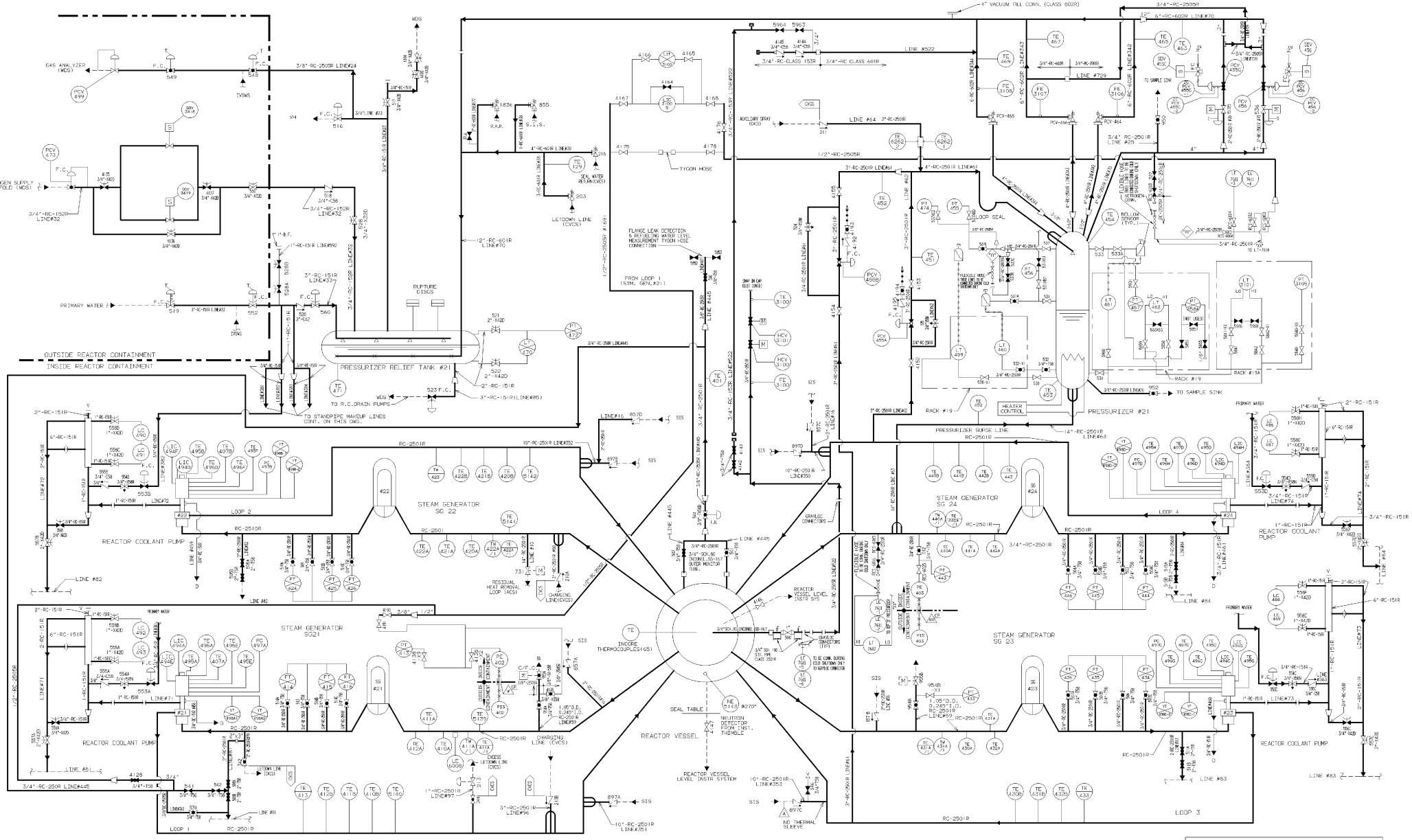

LEGEND

IVSWS - ISOLATION VALVE SEAL WATER SYS.
CVCS - CHEMICAL & VOLUME CONTROL SYS.
ACS - AUXILIARY COOLANT SYS.
SIS - SAFETY INJECTION SYS.
SS - SAMPLING SYS.
WDS - WASTE DISPOSAL SYS.

INDIAN POINT UNIT No. 2	
UFSAR FIGURE 4.2-1 REACTOR COOLANT SYSTEM FLOW DIAGRAM	
MIC. No. 1999MC3430	REV. No. 17B
VALVE POSITIONS ARE NOT CONTROLLED BY THIS FIGURE	

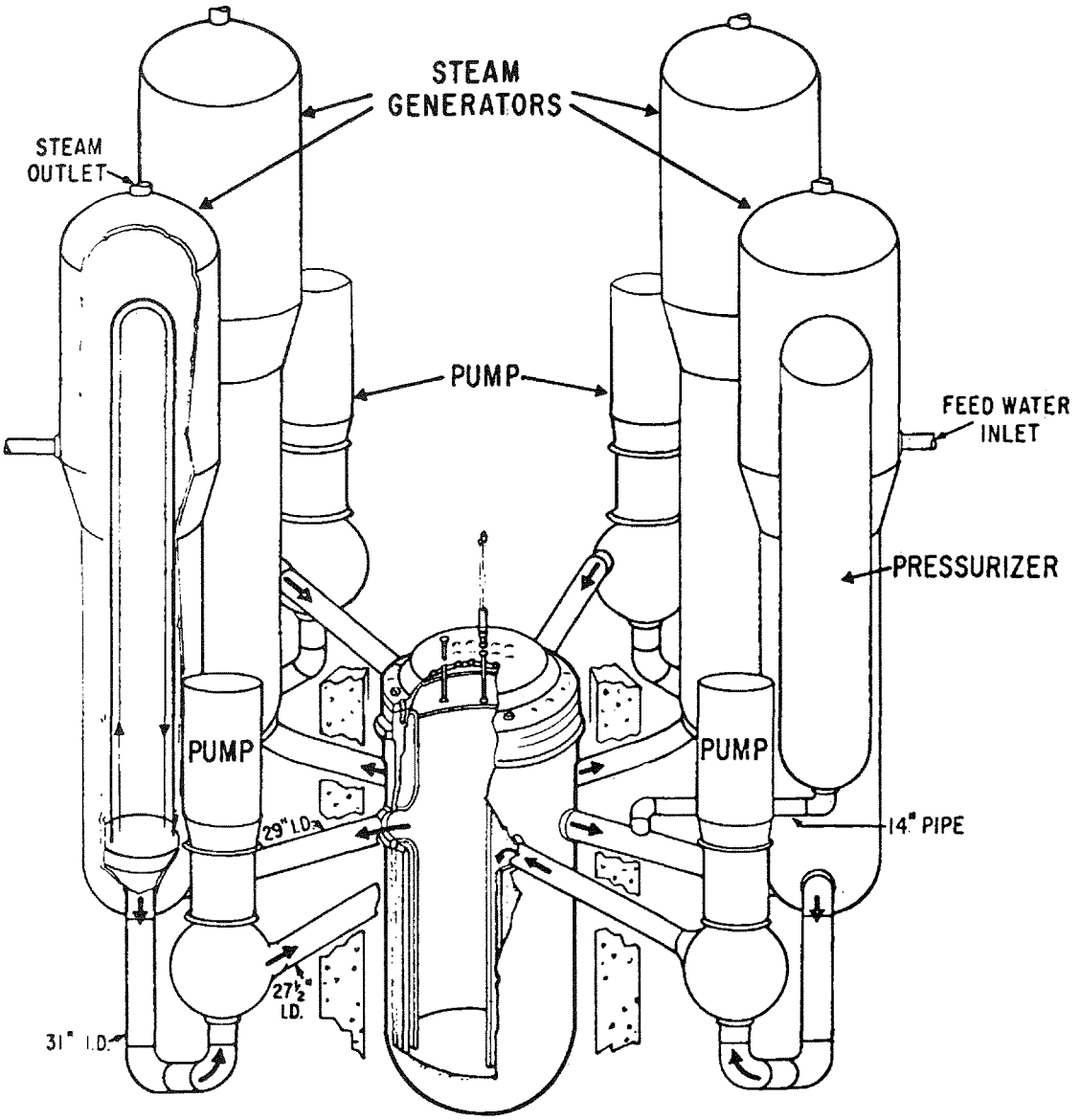

VIEW LOOKING WEST

INDIAN POINT UNIT No. 2	
UFSAR FIGURE 4.2-2 REACTOR COOLANT SYSTEM SCHEMATIC FLOW DIAGRAM	
MIC. No. 1999MC3733	REV. No. 17A

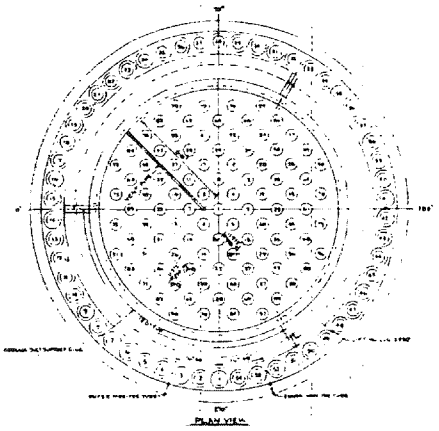

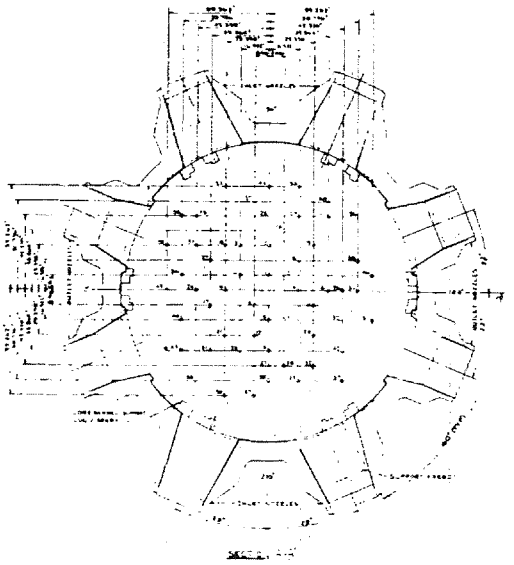

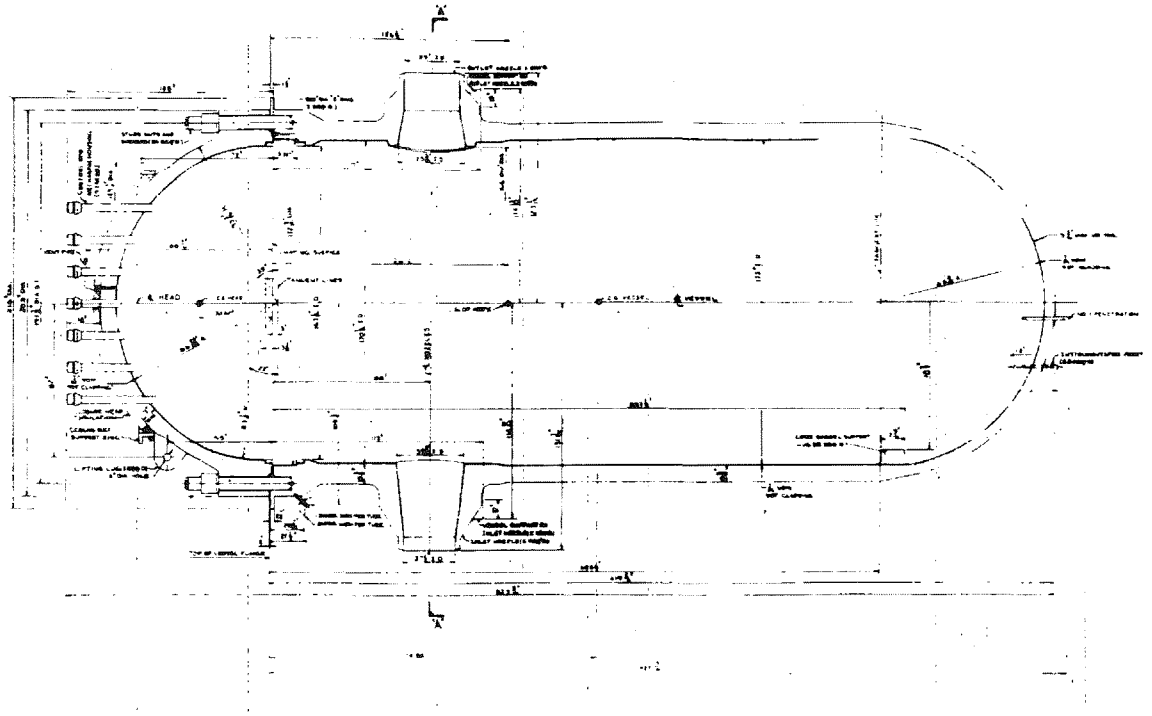

INDIAN POINT UNIT No. 2	
UFSAR FIGURE 4.2-3 REACTOR VESSEL	
MIC. No. 1999MC3734	REV. No. 17A

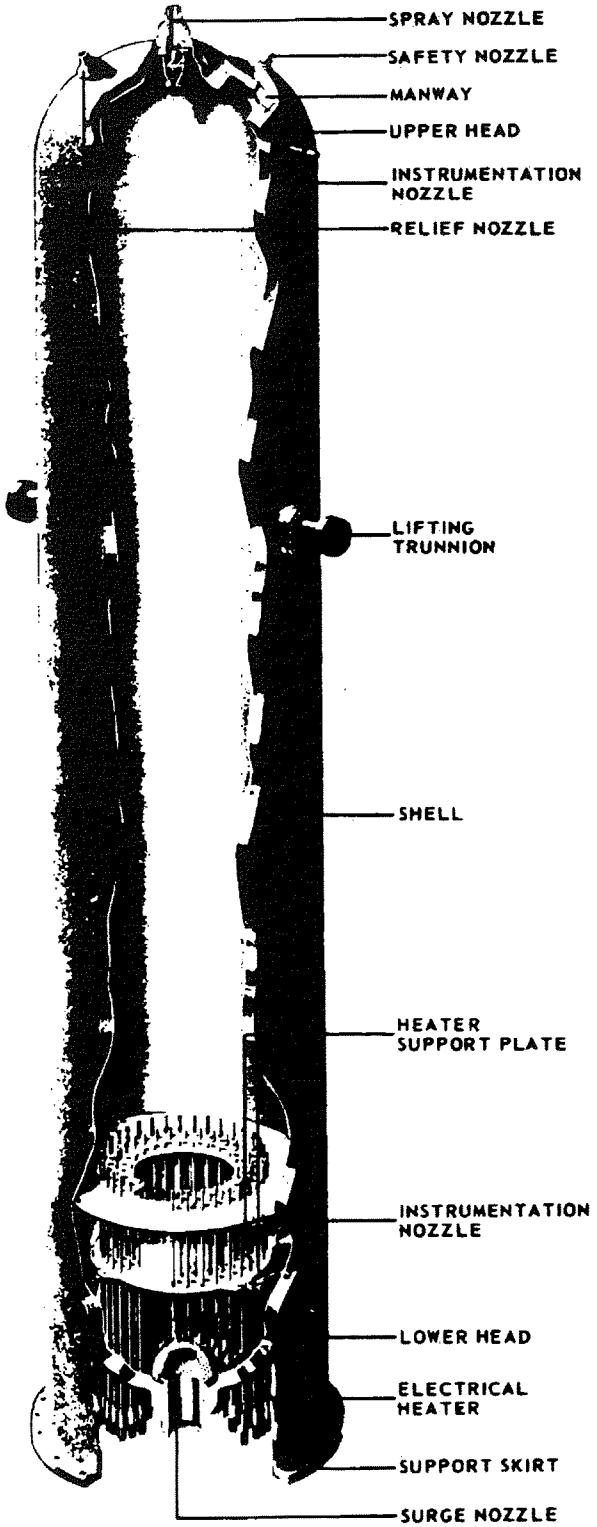

INDIAN POINT UNIT No. 2	
UFSAR FIGURE 4.2-4 PRESSURIZER	
MIC. No. 1999MC3735	REV. No. 17A

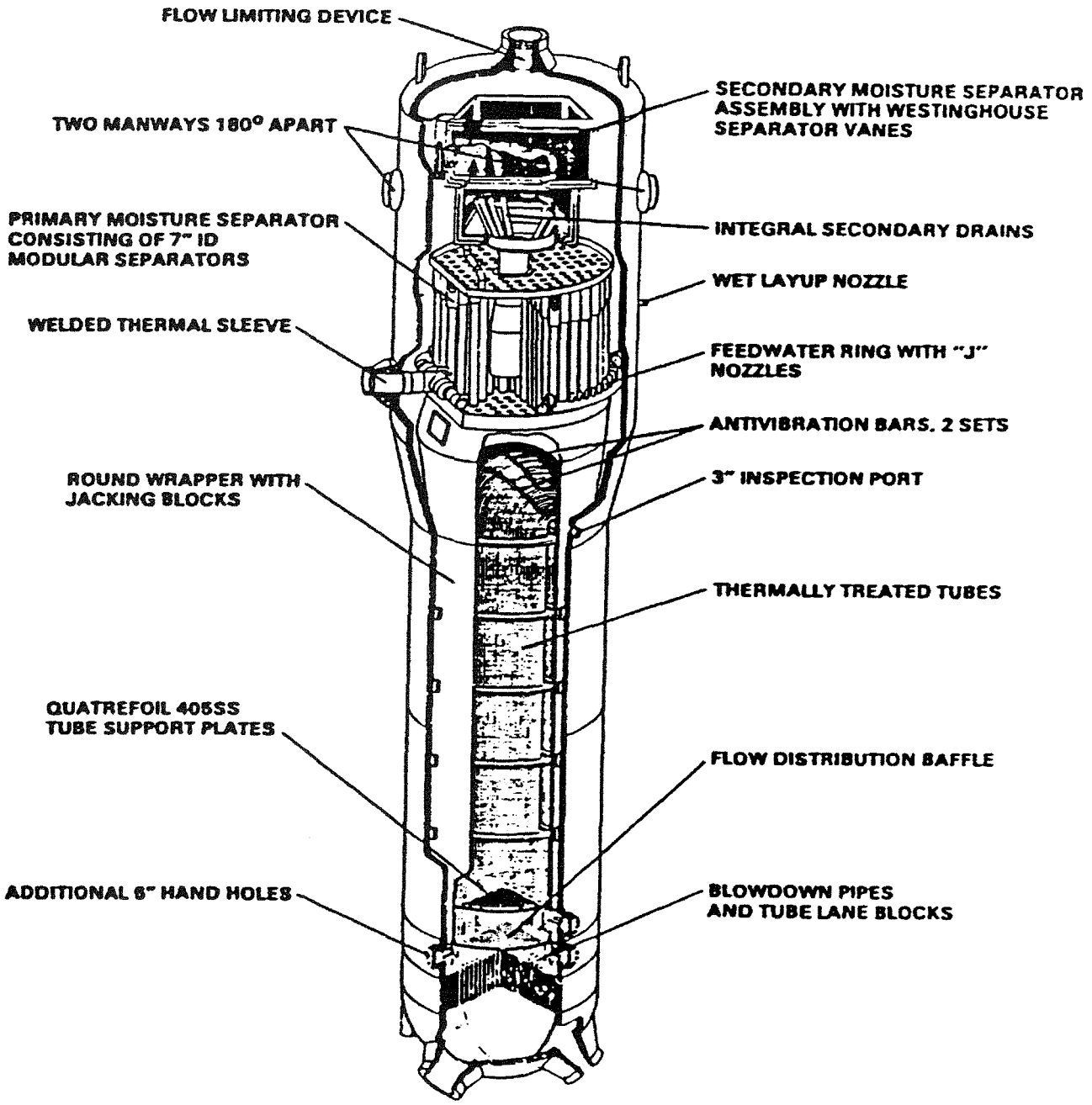

INDIAN POINT UNIT No. 2	
UFSAR FIGURE 4.2–5 STEAM GENERATOR ASSEMBLY	
MIC. No. 1999MC3736	REV. No. 17A

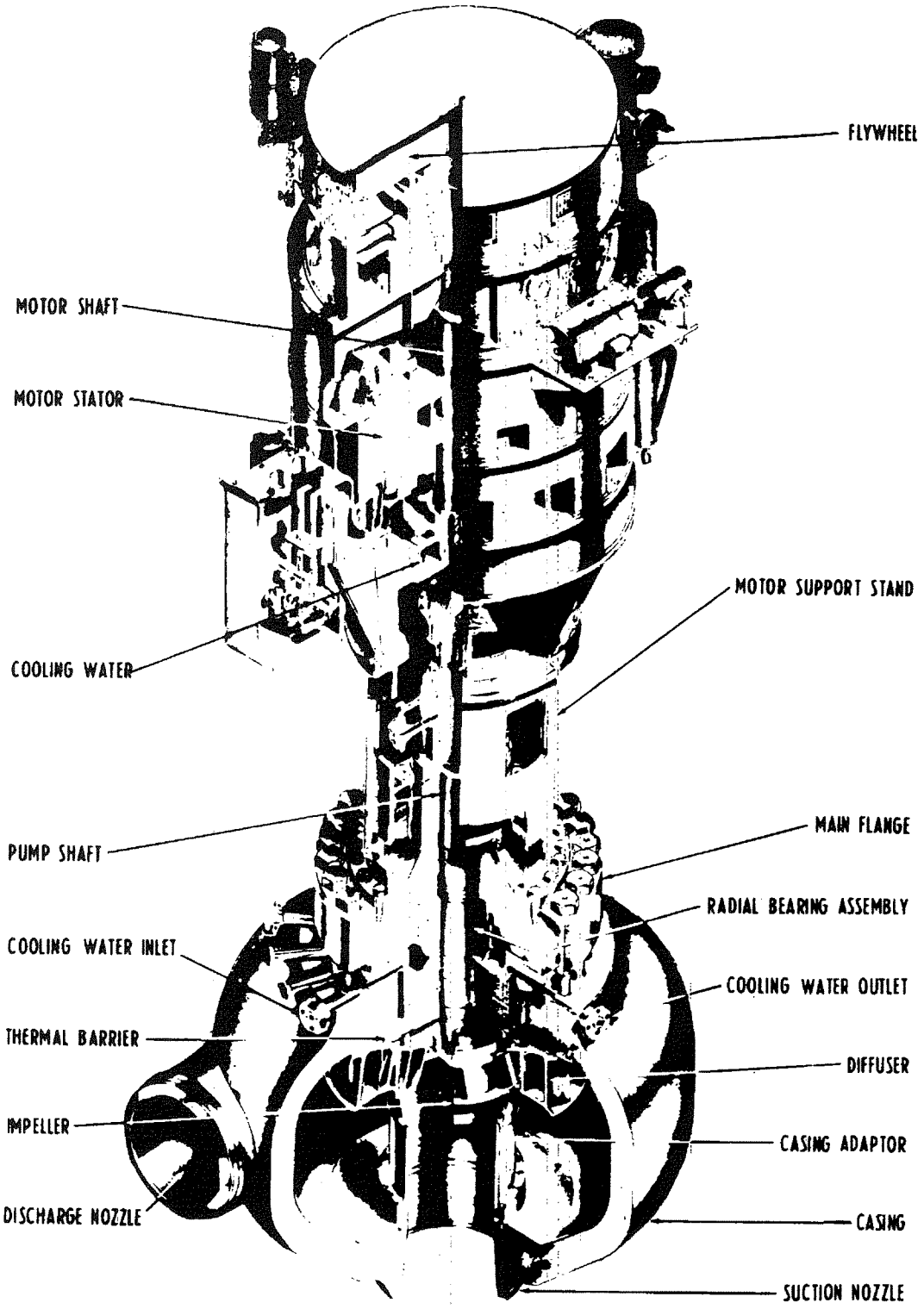

INDIAN POINT UNIT No. 2	
UFSAR FIGURE 4.2–6 REACTOR COOLANT PUMP	
MIC. No. 1999MC3737	REV. No. 17A

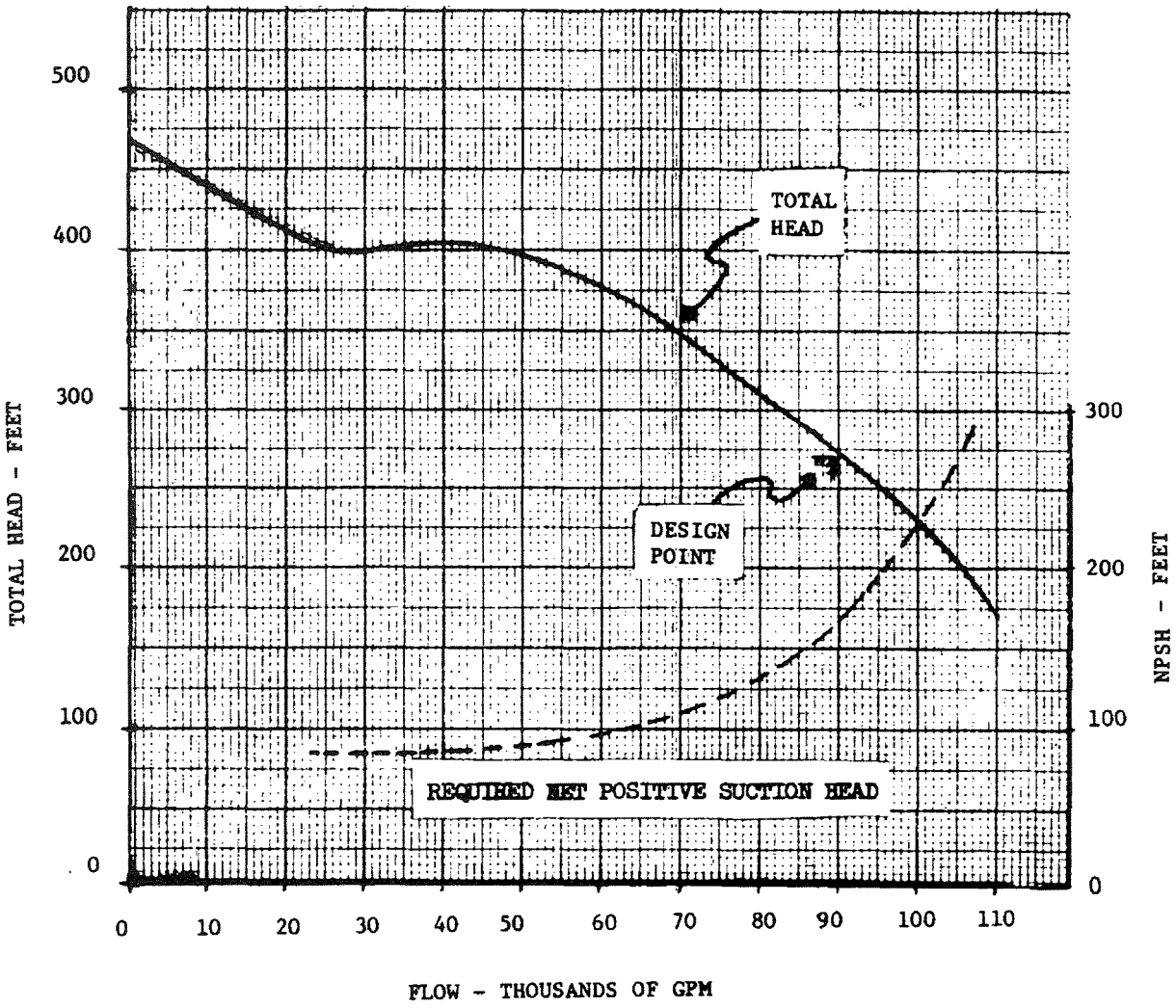

INDIAN POINT UNIT No. 2	
UFSAR FIGURE 4.2-7 REACTOR COOLANT PUMP ESTIMATED PERFORMANCE CHARACTERISTICS	
MIC. No. 1999MC3738	REV. No. 17A

FLYWHEEL

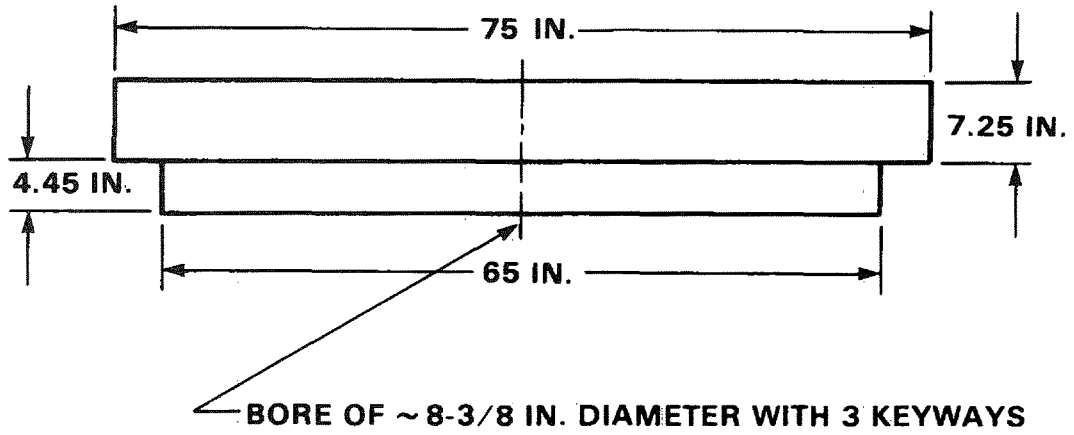

NOTE: THE PLATES ARE BOLTED TOGETHER WITH THE BOLTS ALIGNED PERPENDICULAR TO THE PLANES OF THE PLATES.

INDIAN POINT UNIT No. 2	
UFSAR FIGURE 4.2-8 FLYWHEEL	
MIC. No. 1999MC3739	REV. No. 17A

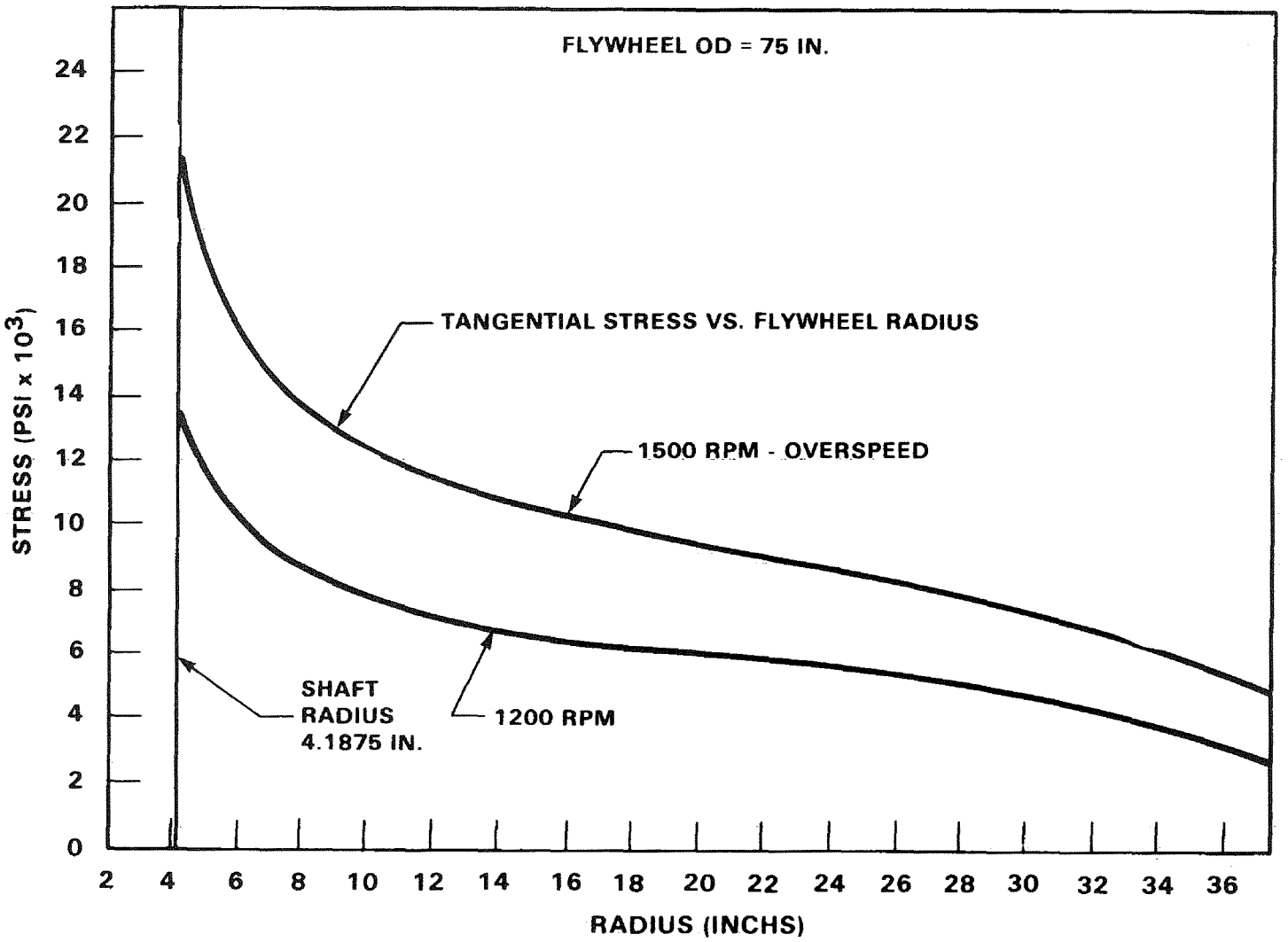

INDIAN POINT UNIT No. 2	
UFSAR FIGURE 4.2–9 REACTOR COOLANT PUMP FLYWHEEL TANGENTIAL STRESS VS RADIUS	
MIC. No. 1999MC3740	REV. No. 17A

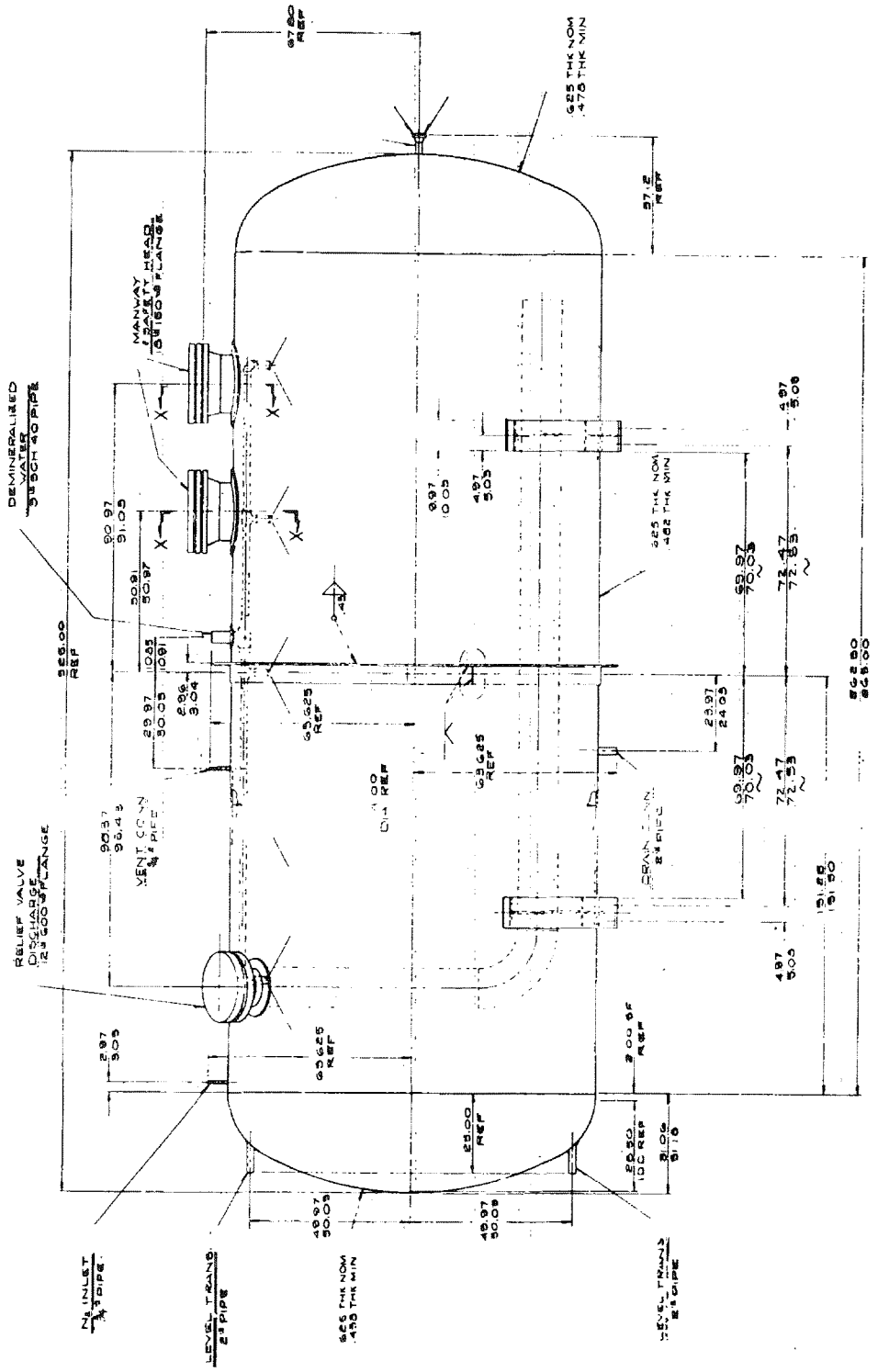

INDIAN POINT UNIT No. 2	
UFSAR FIGURE 4.2-10	
PRESSURIZER RELIEF TANK	
MIC. No. 1999MC3741	REV. No. 17A

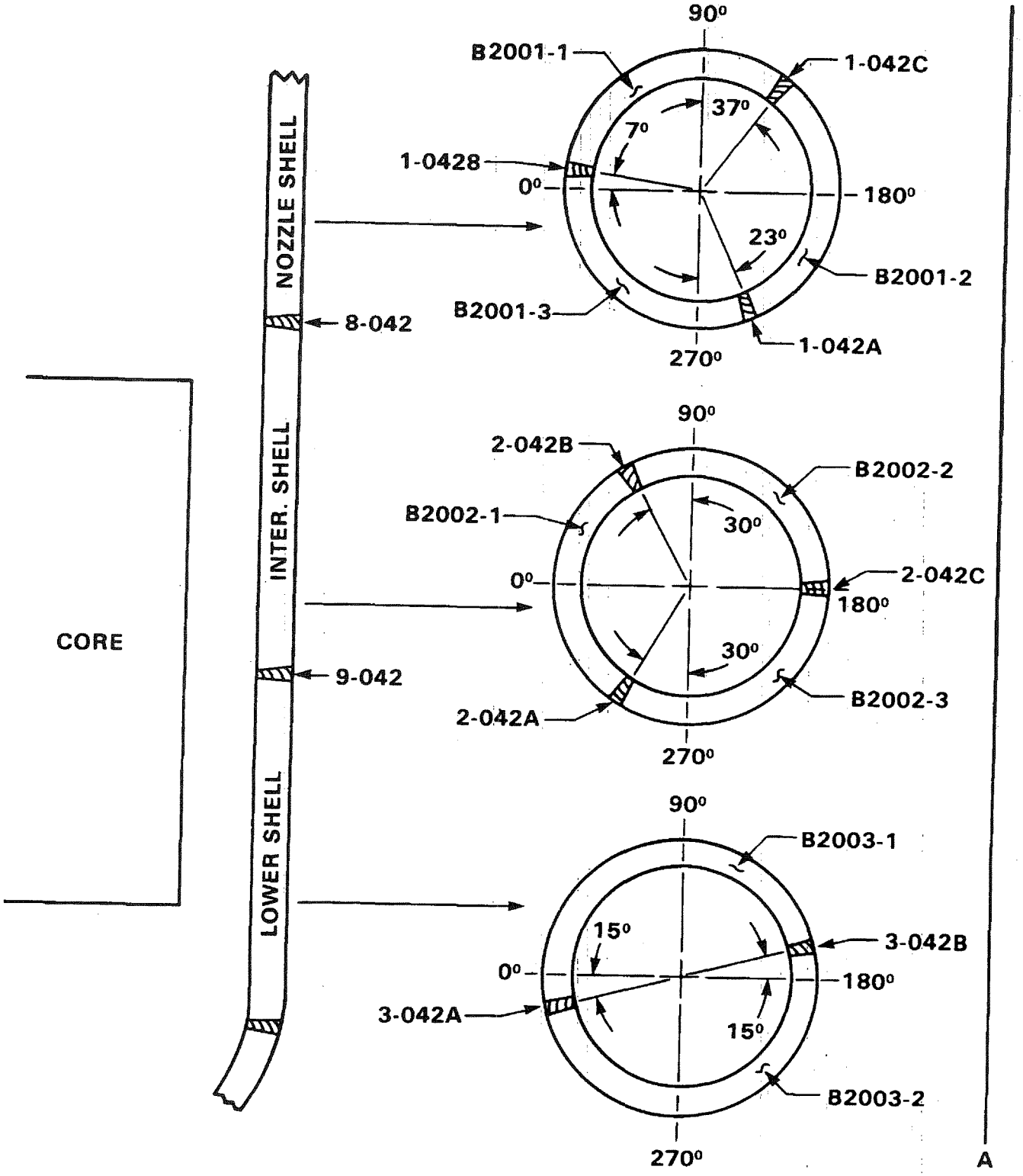

INDIAN POINT UNIT No. 2	
UFSAR FIGURE 4.2–11 IDENTIFICATION & LOCATION OF BELTLINE REGION MATERIAL FOR THE INDIAN POINT UNIT 2 REACTOR VESSEL	
MIC. No. 1999MC3742	REV. No. 17A

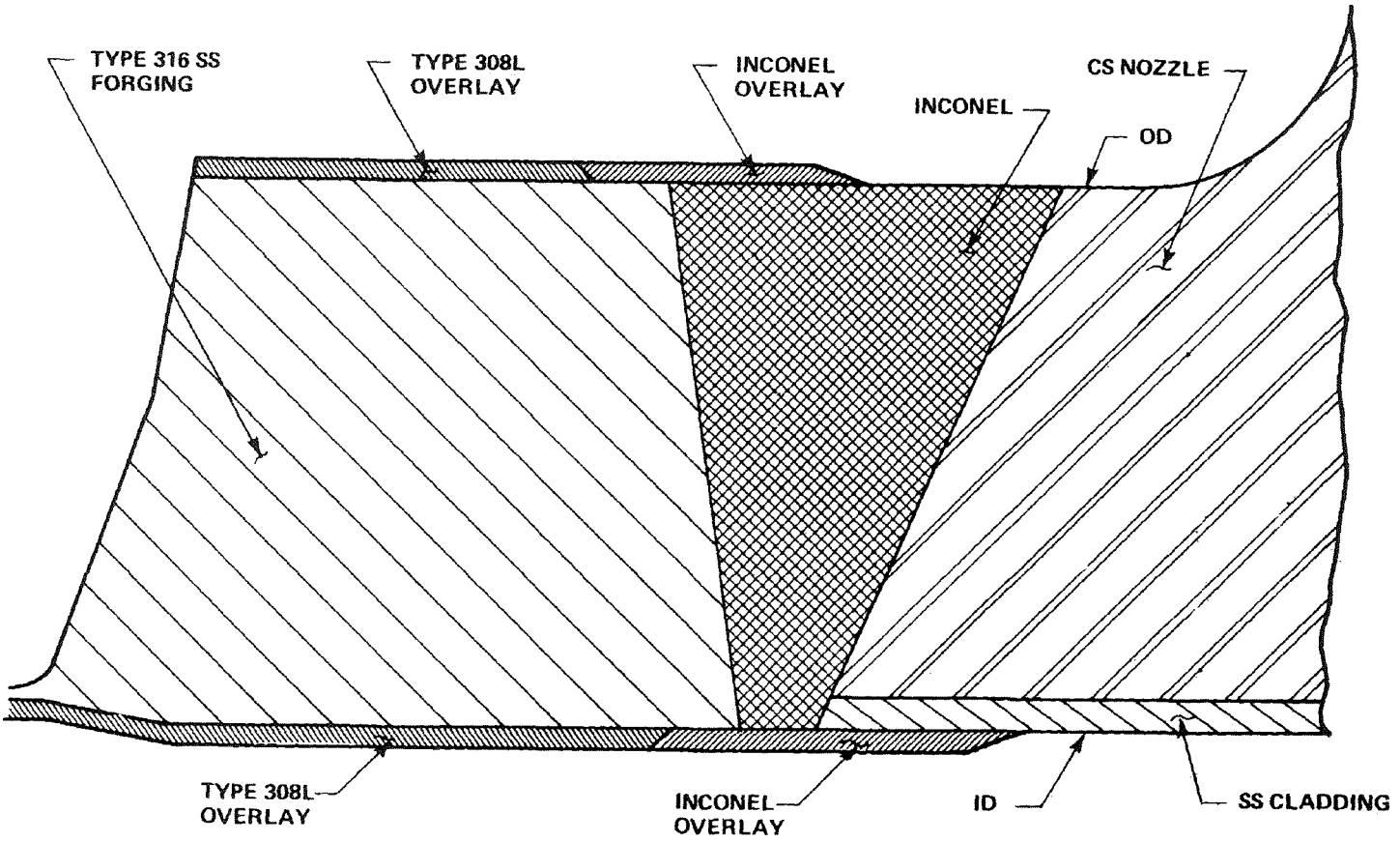

INDIAN POINT UNIT No. 2	
UFSAR FIGURE 4C-1 PRIMARY NOZZLE COMBUSTION ENGINEERING REACTOR VESSEL	
MIC. No. 1999MC3743	REV. No. 17A

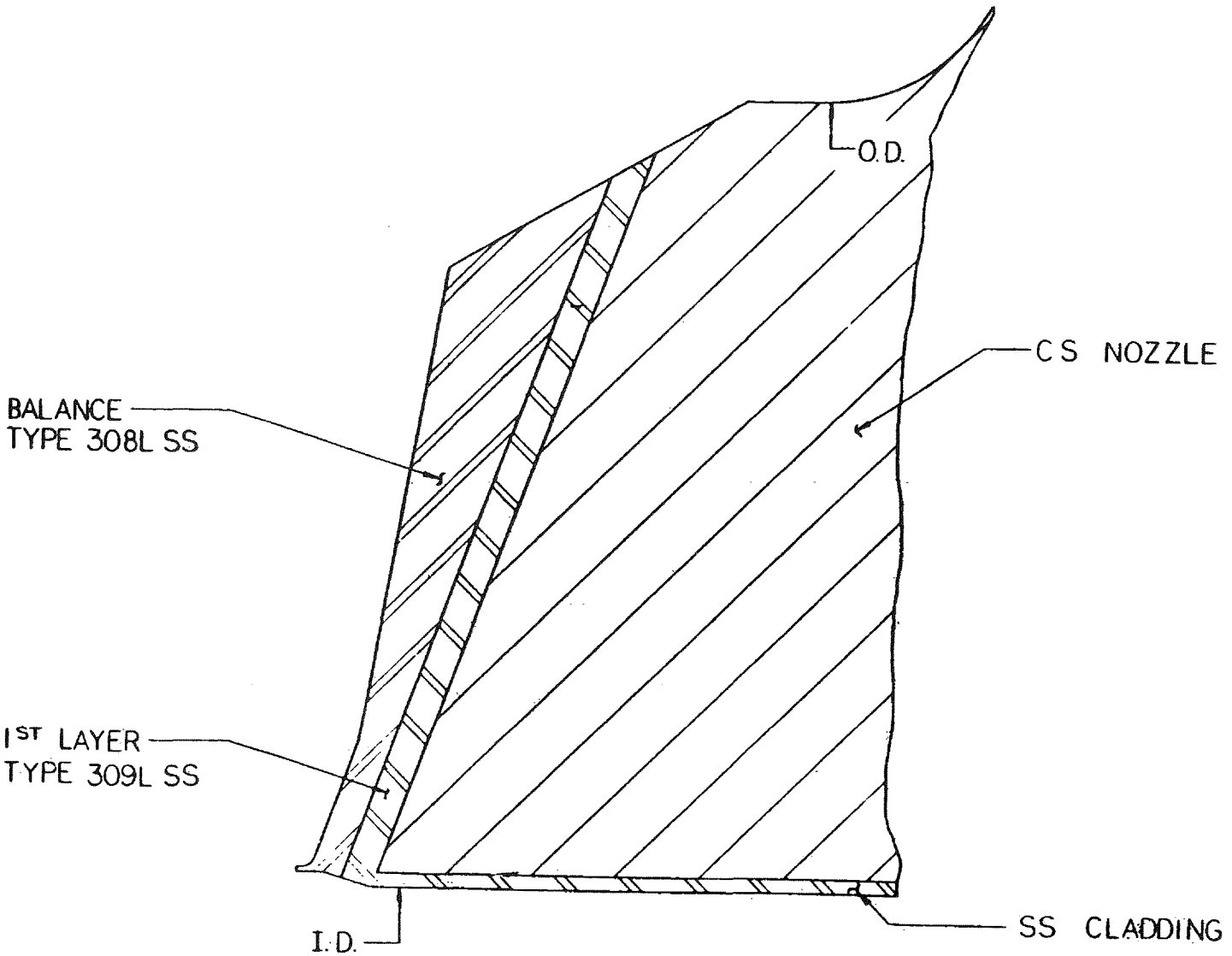

INDIAN POINT UNIT No. 2	
UFSAR FIGURE 4C-2 PRIMARY NOZZLE TAMPA STEAM GENERATORS	
MIC. No. 1999MC3744	REV. No. 17A