Figure 10.2-2—Overspeed Protection System Schematic

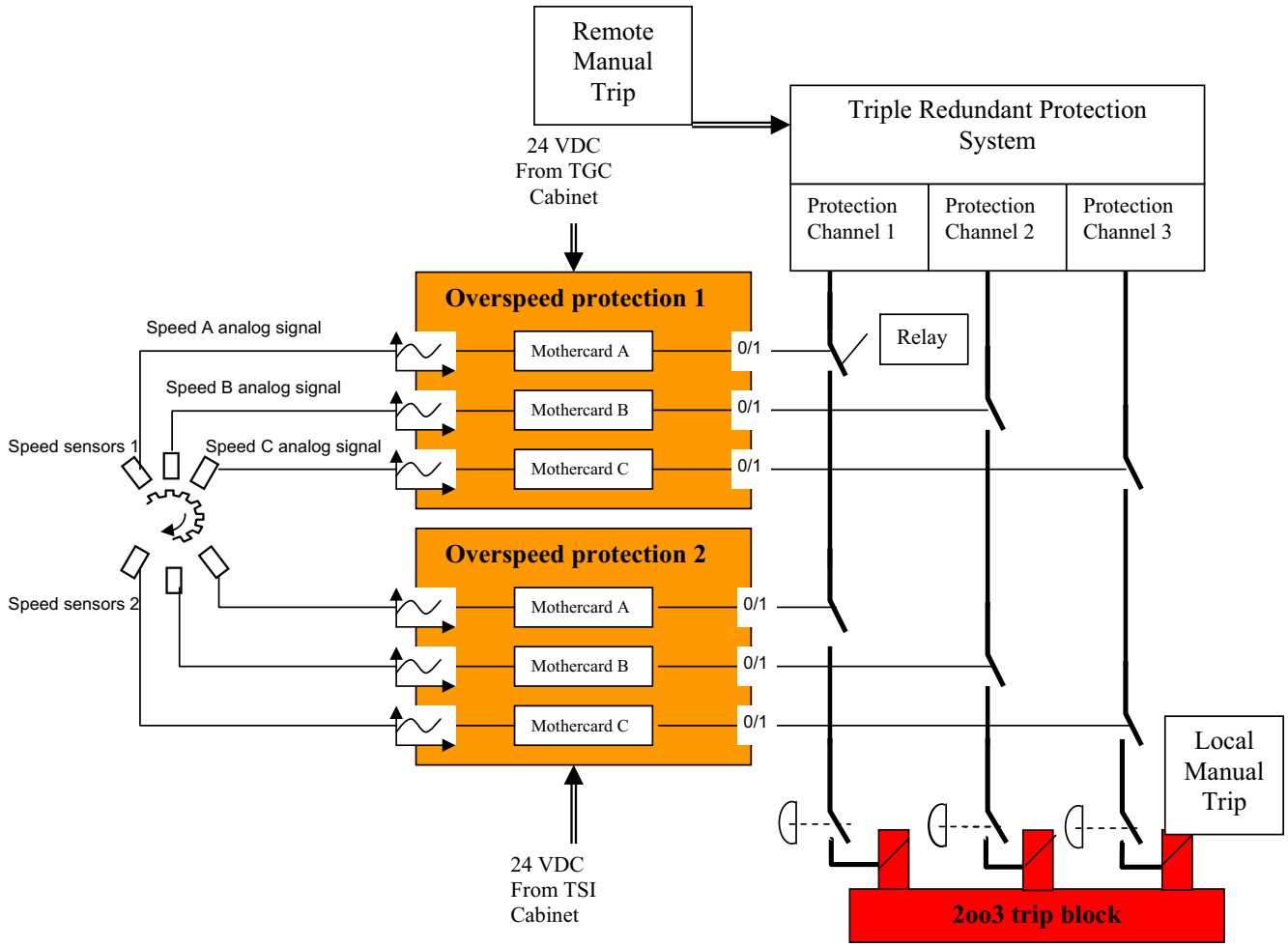

Shown in the Tripped Condition

REV 004
EPR8000 T2

Figure 10.2-3—Turbine Trip Block Schematic

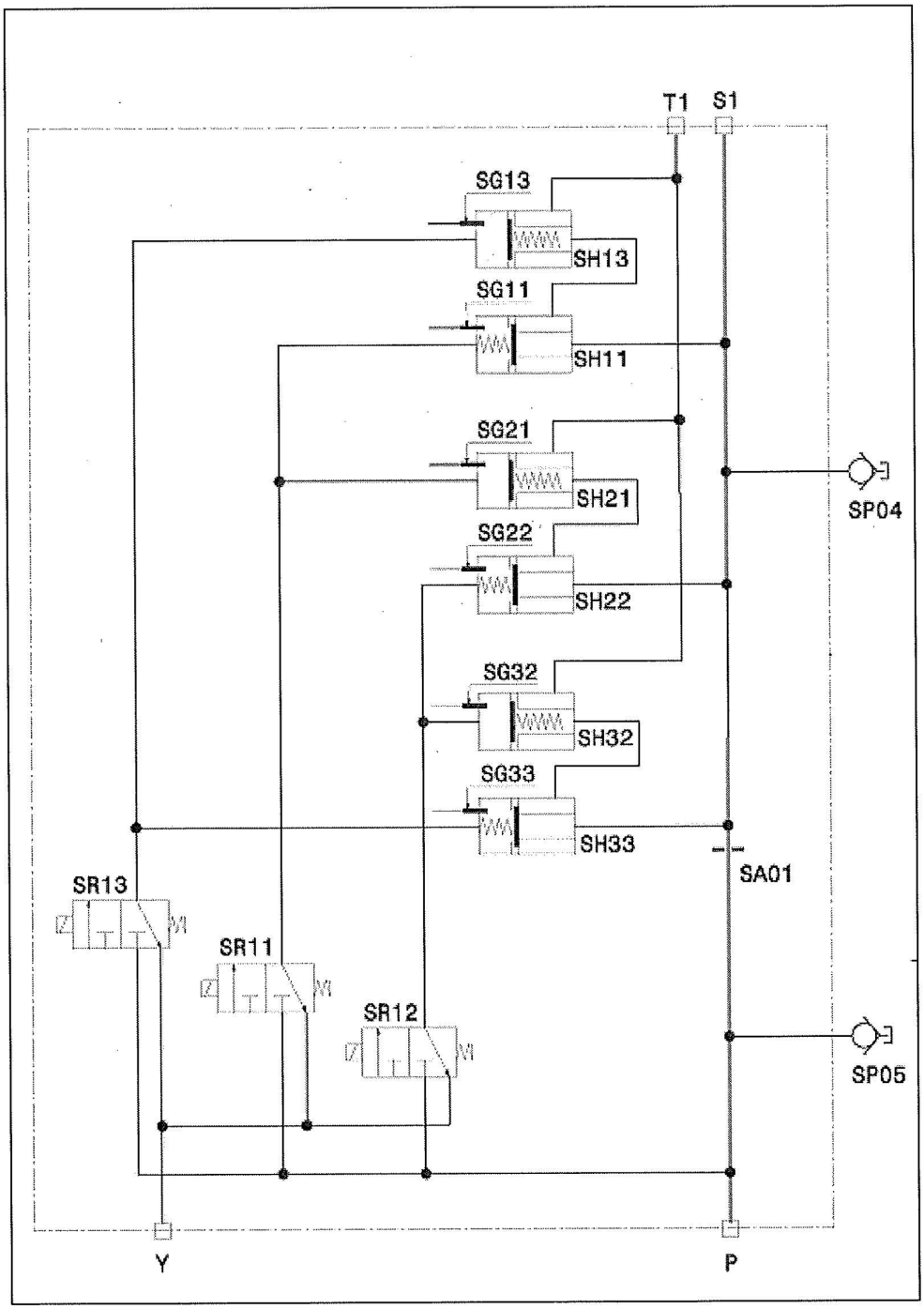

Solenoid valves are shown in the tripped condition. Plate valves are shown in the normal operating position.

Y = Fluid Drain to the control fluid tank from the solenoid valves.
P = Fluid to the trip block from the control fluid pump discharge header.
T1 = Fluid drain to the control fluid tank from the plate valves.
S1 = Fluid to the main steam and reheat valve actuators.

REV 004
EPR8005 T2

Figure 10.2-4—Control Fluid Drain Headers

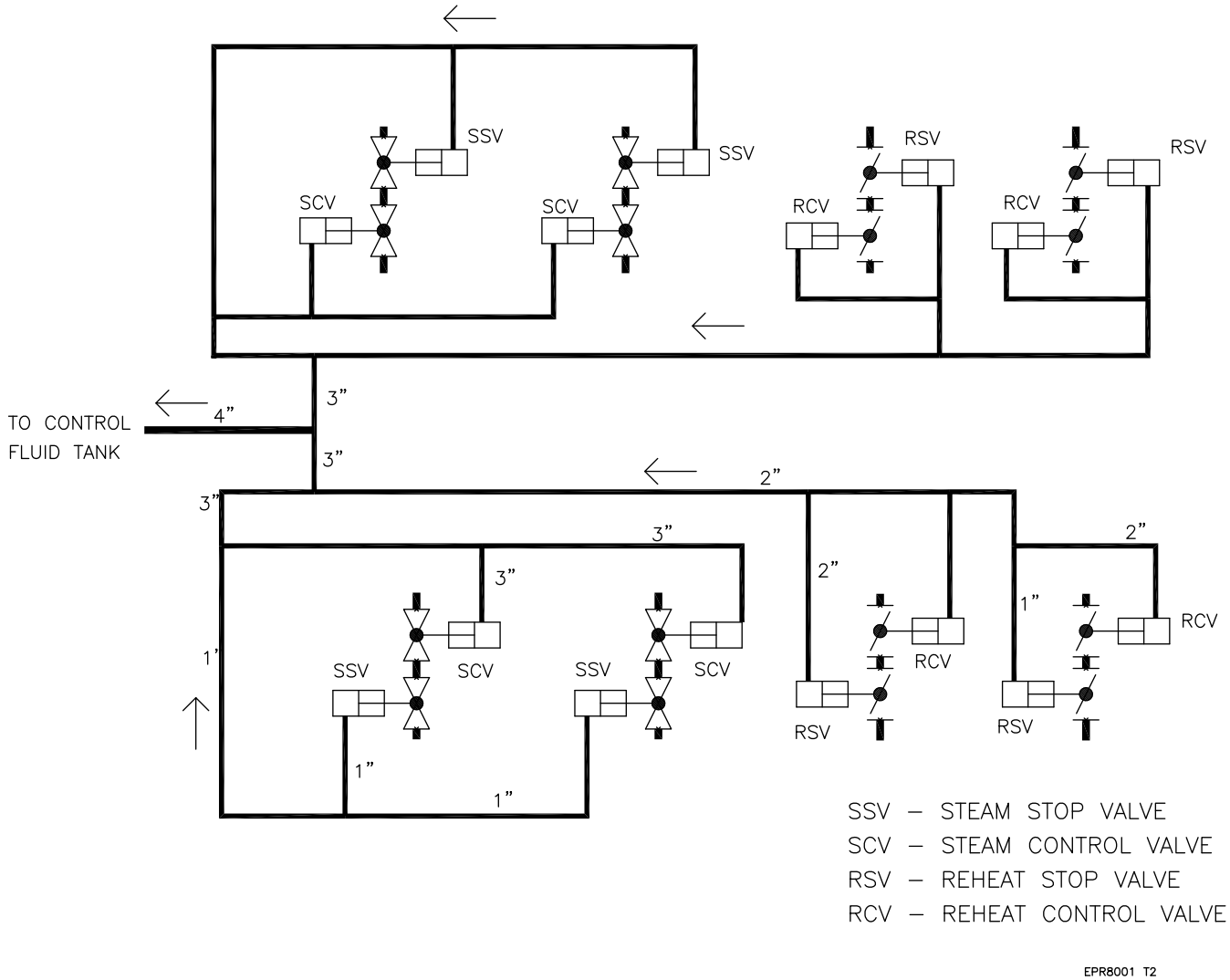

Figure 10.2-5—Non-Return Valve Air Schematic

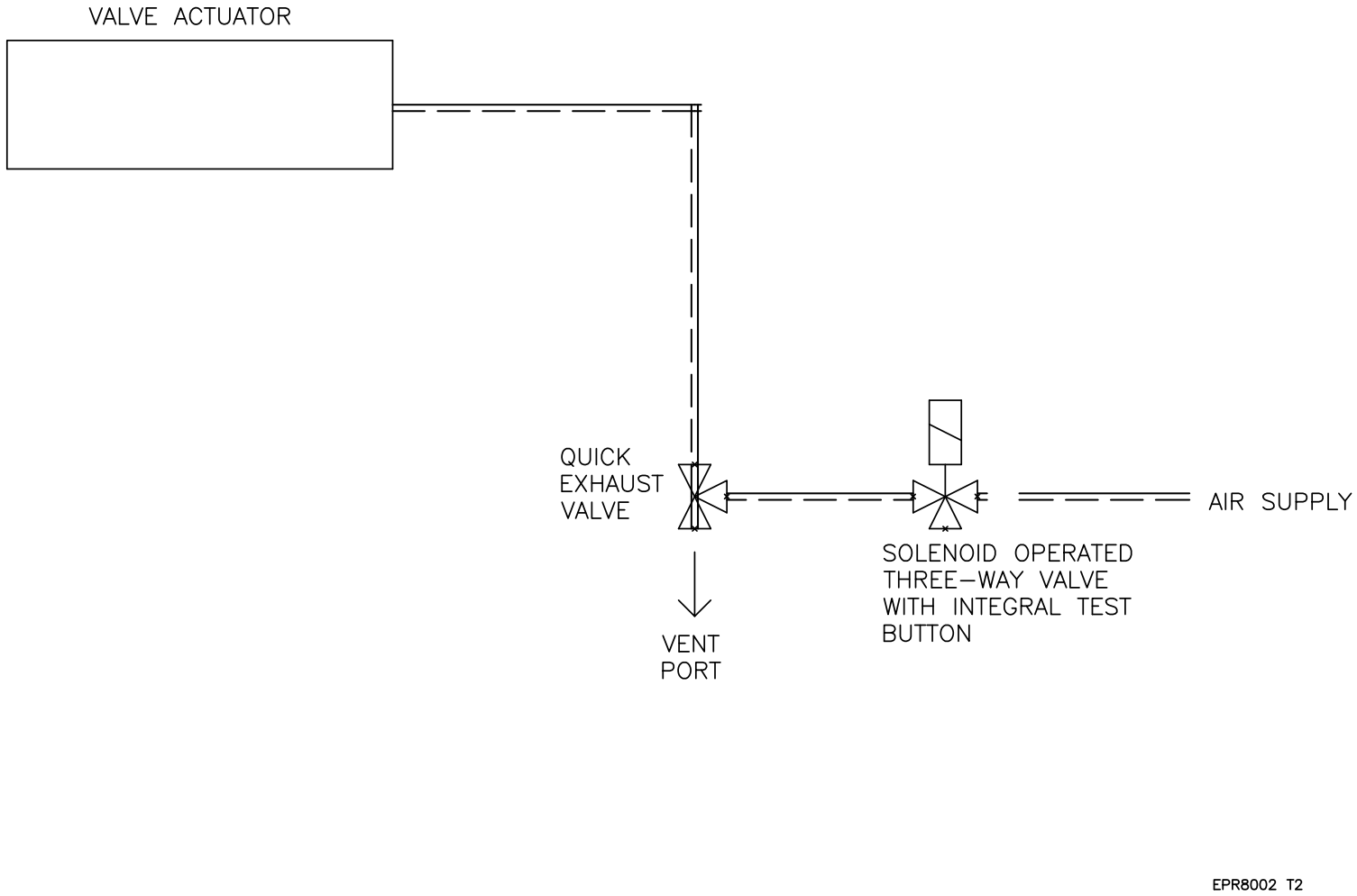

Next File