Figure 5.1-1—RCS Schematic Flow Diagram

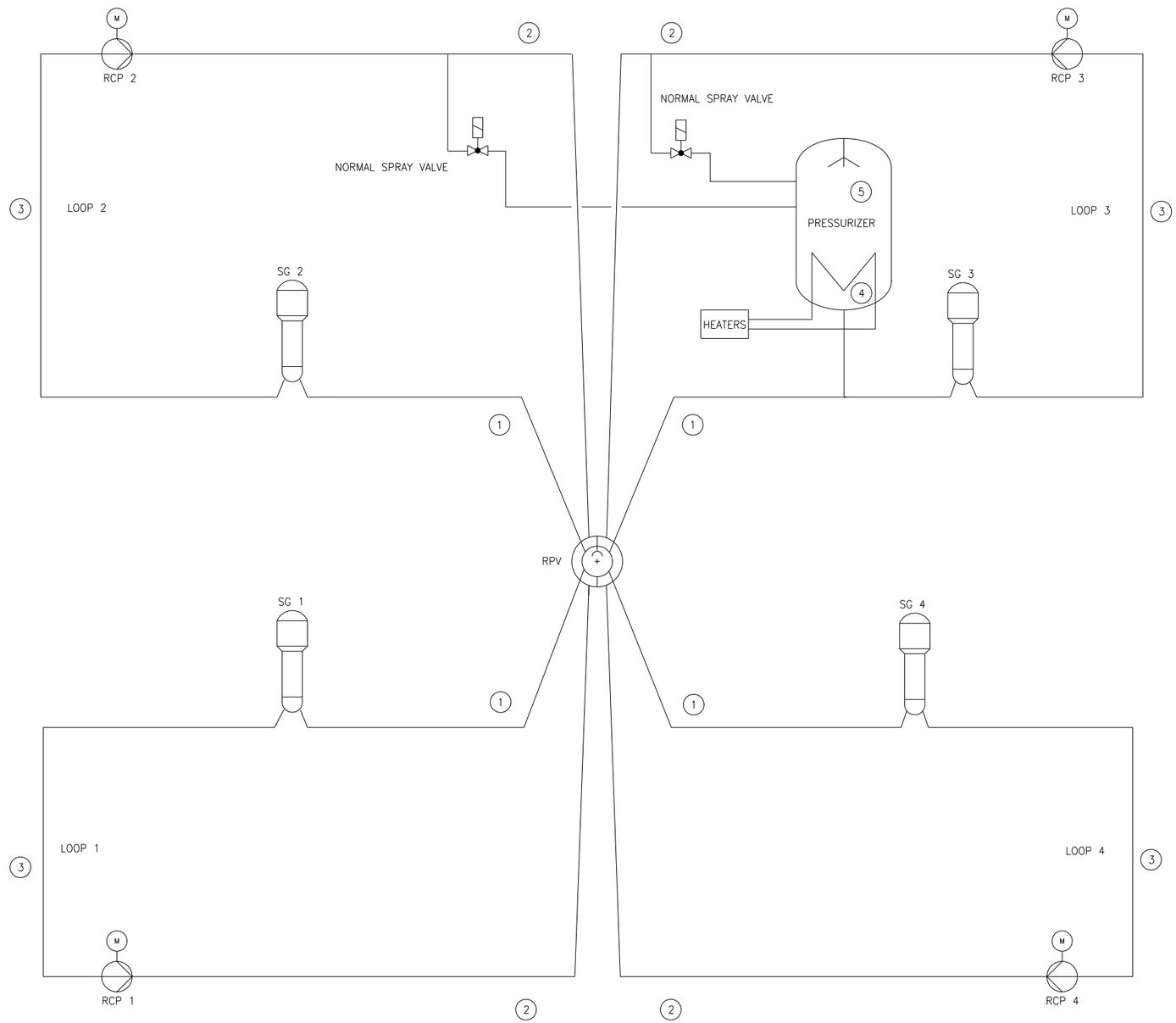

BEST ESTIMATE CONDITIONS OF RCS AT 100% POWER				
ITEM	DESCRIPTION	FLOW (gpm)	PRESSURE (psia)	TEMPERATURE (F)
1	HOT LEG	124,741	2265	624.6
2	COLD LEG	124,741	2324	563.4
3	CROSS-OVER LEG	124,741	2218	563.4
4	PZR LIQUID PHASE	-	2250	652.7
5	PZR STEAM PHASE	-	2250	652.7

Figure 5.1-2—RCS Layout

Figure 5.1-3—RCS Elevation

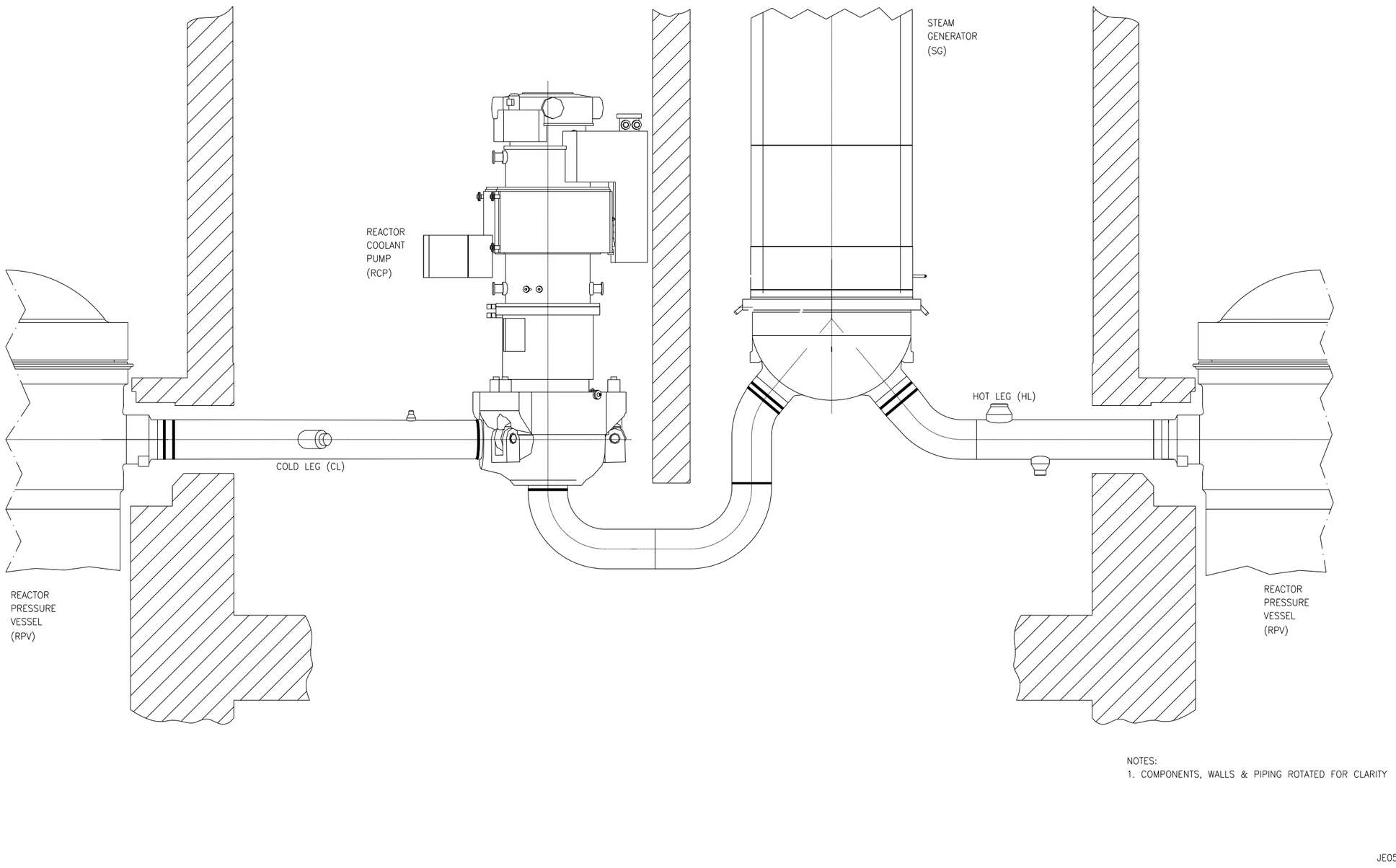

Figure 5.1-4—RCS Piping and Instrumentation Diagram
Sheet 1 of 7

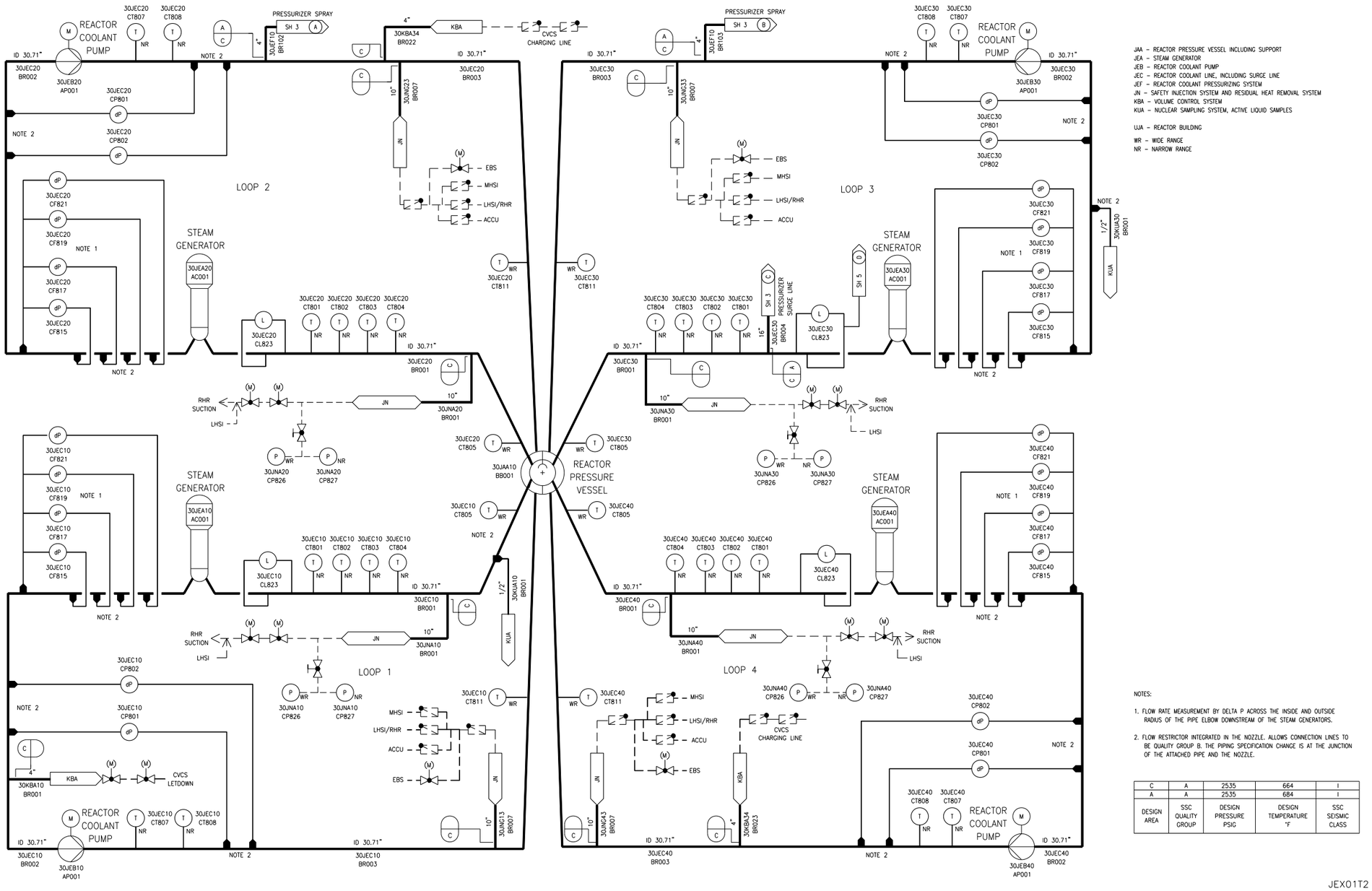

Figure 5.1-4—RCS Piping and Instrumentation Diagram
Sheet 2 of 7

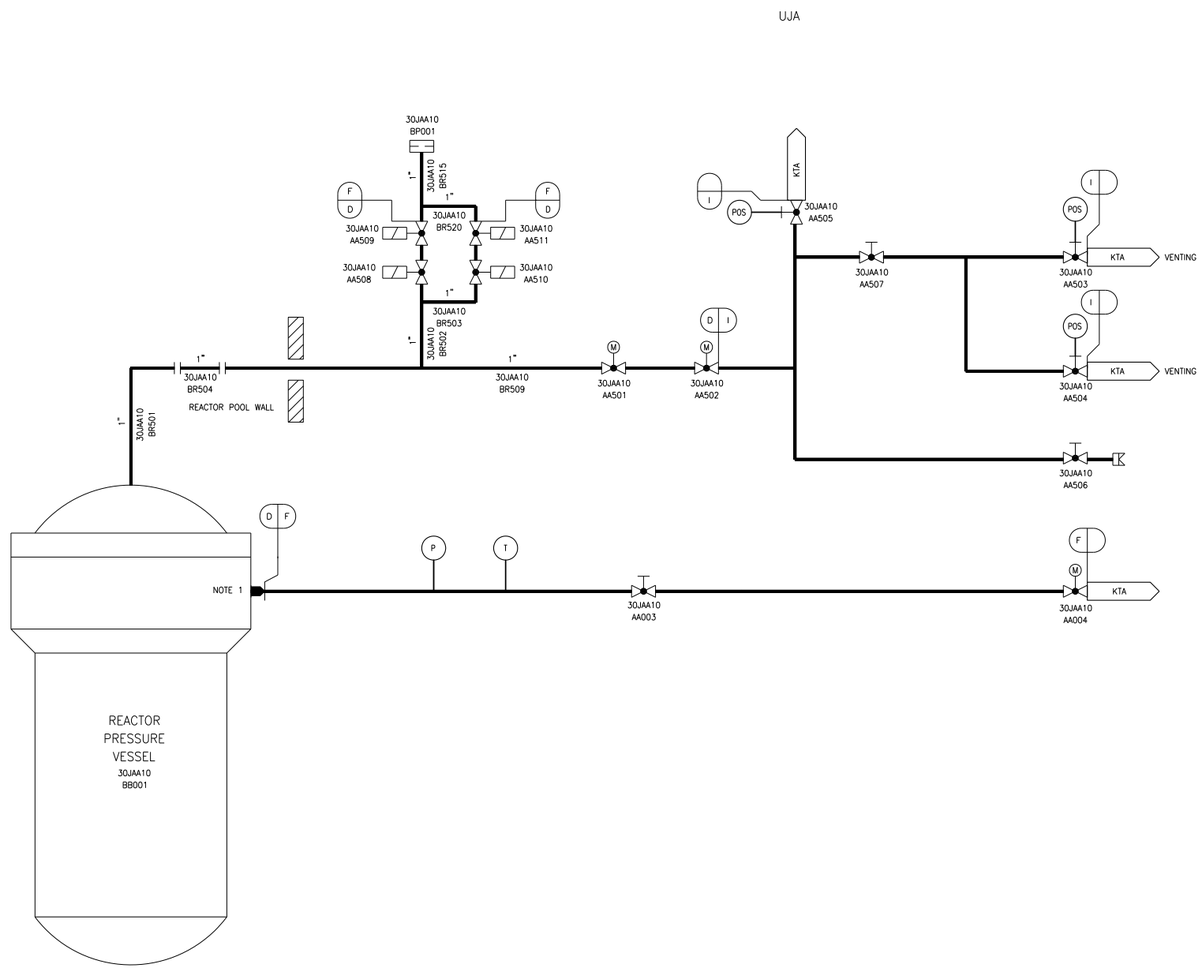

JAA – REACTOR PRESSURE VESSEL
KTA – NUCLEAR ISLAND DRAIN AND VENT SYSTEMS – PRIMARY EFFLUENTS

UJA – REACTOR BUILDING

NOTE:

1. NOZZLE BETWEEN RPV INTERNAL AND EXTERNAL O-RING. FLOW RESTRICTOR INTEGRATED INTO THE NOZZLE.

DESIGN AREA	SSC QUALITY GROUP	DESIGN PRESSURE PSIG	DESIGN TEMPERATURE °F	SSC SEISMIC CLASS
I	D	425	215	II
F	D	2535	664	II
D	A	2535	664	I

JEX02T2

Figure 5.1-4—RCS Piping and Instrumentation Diagram
Sheet 3 of 7

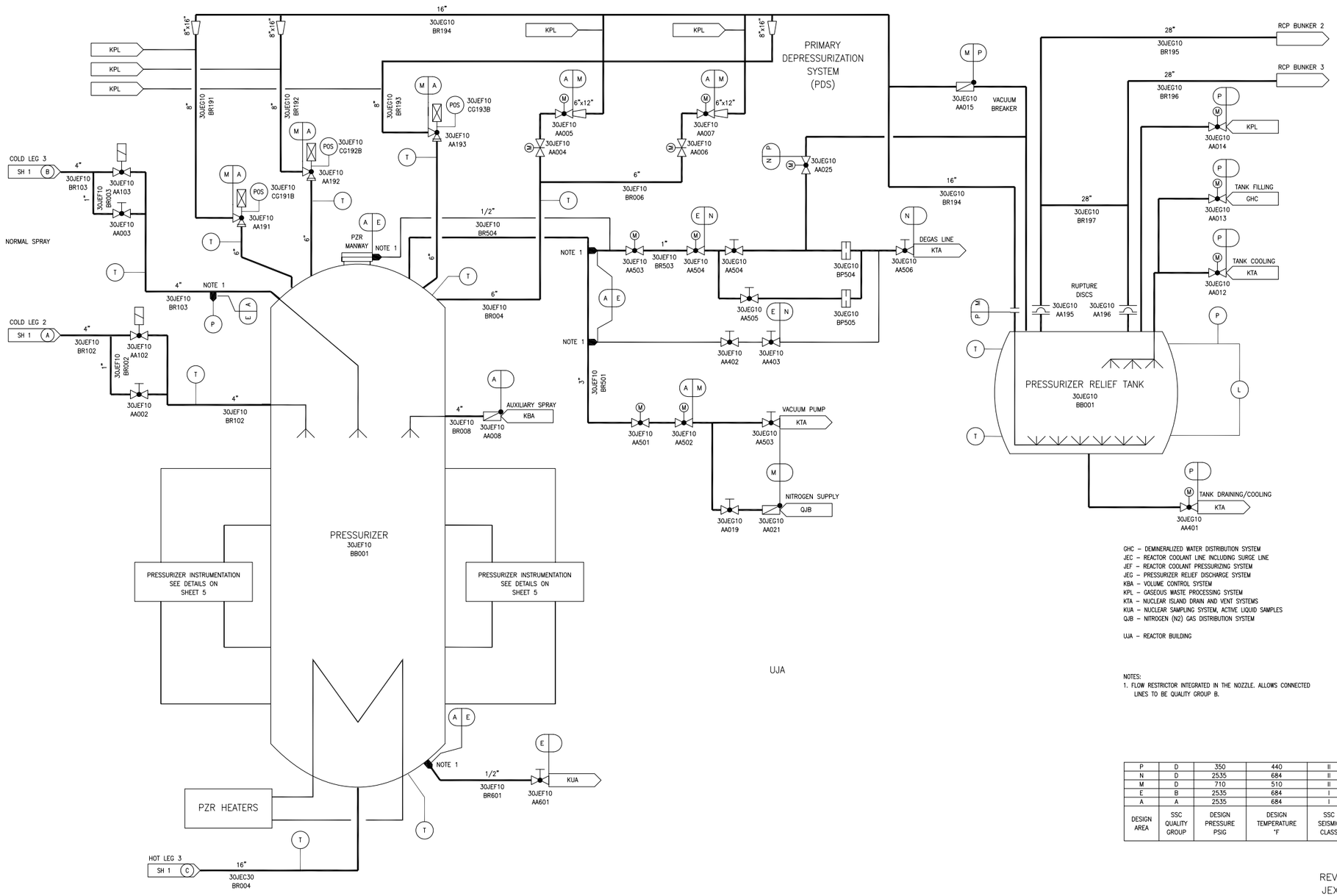

Figure 5.1-4—RCS Piping and Instrumentation Diagram
Sheet 4 of 7

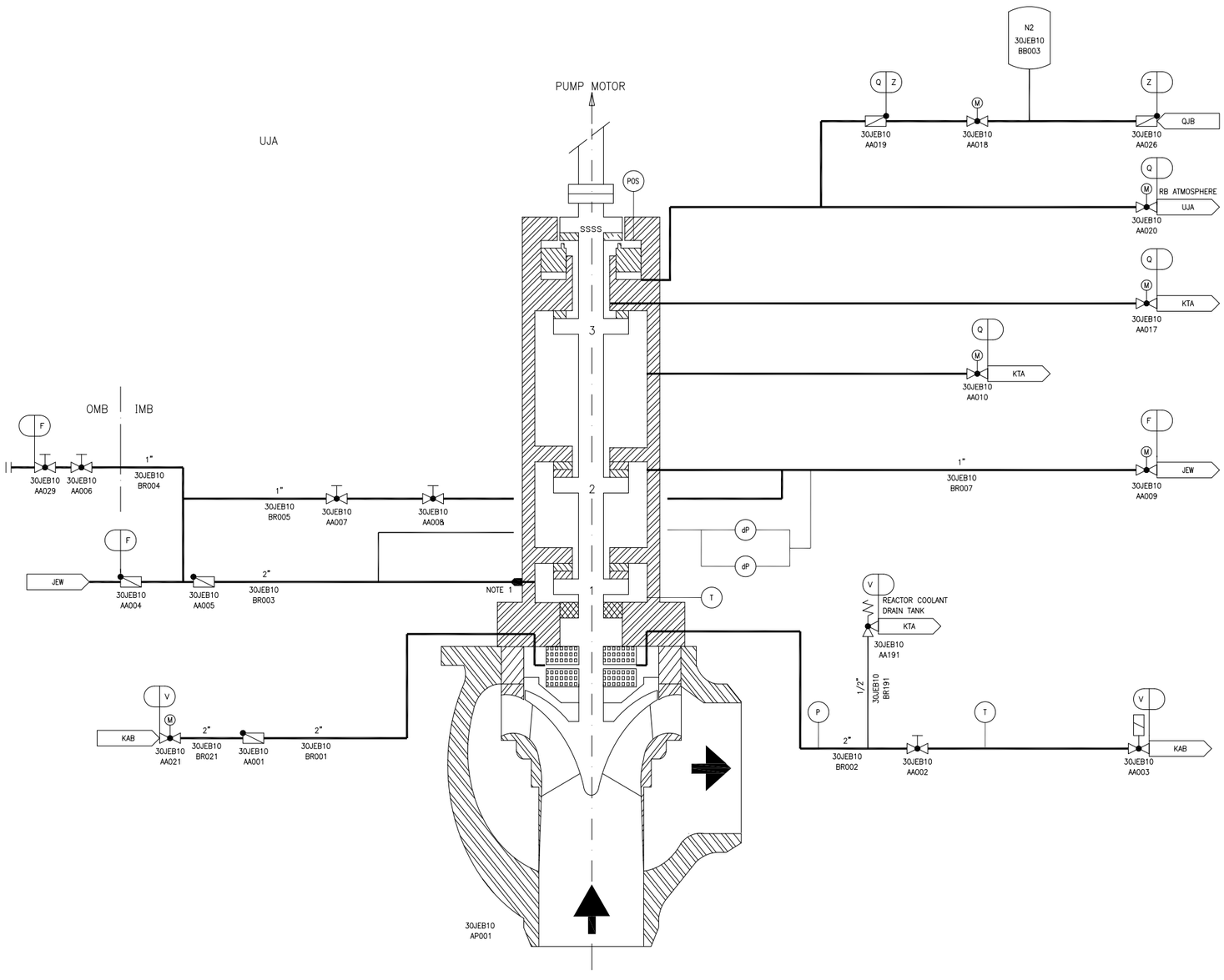

JEB – REACTOR COOLANT PUMP
JEW – REACTOR COOLANT PUMP SEAL INJECTION PORTION OF CHEMICAL AND VOLUME CONTROL SYSTEM
KTA – NUCLEAR ISLAND DRAIN AND VENT SYSTEM – PRIMARY EFFLUENTS
KAB – COMPONENT COOLING WATER SYSTEM COMMON HEADER
QJB – NITROGEN (N2) GAS DISTRIBUTION SYSTEM

UJA – REACTOR BUILDING

SSSS – STAND STILL SEAL SYSTEM

NOTES:
1. FLOW RESTRICTOR INTEGRATED IN THE RCP. ALLOWS CONNECTION LINES TO BE QUALITY GROUP B.

Q	D	2535	664	II
Z	D	175	140	II
F	B	3045	664	I
V	C	2535	664	I
DESIGN AREA	SSC QUALITY GROUP	DESIGN PRESSURE PSIG	DESIGN TEMPERATURE °F	SSC SEISMIC CLASS

REV 005
JEX04T2

Figure 5.1-4—RCS Piping and Instrumentation Diagram
Sheet 5 of 7

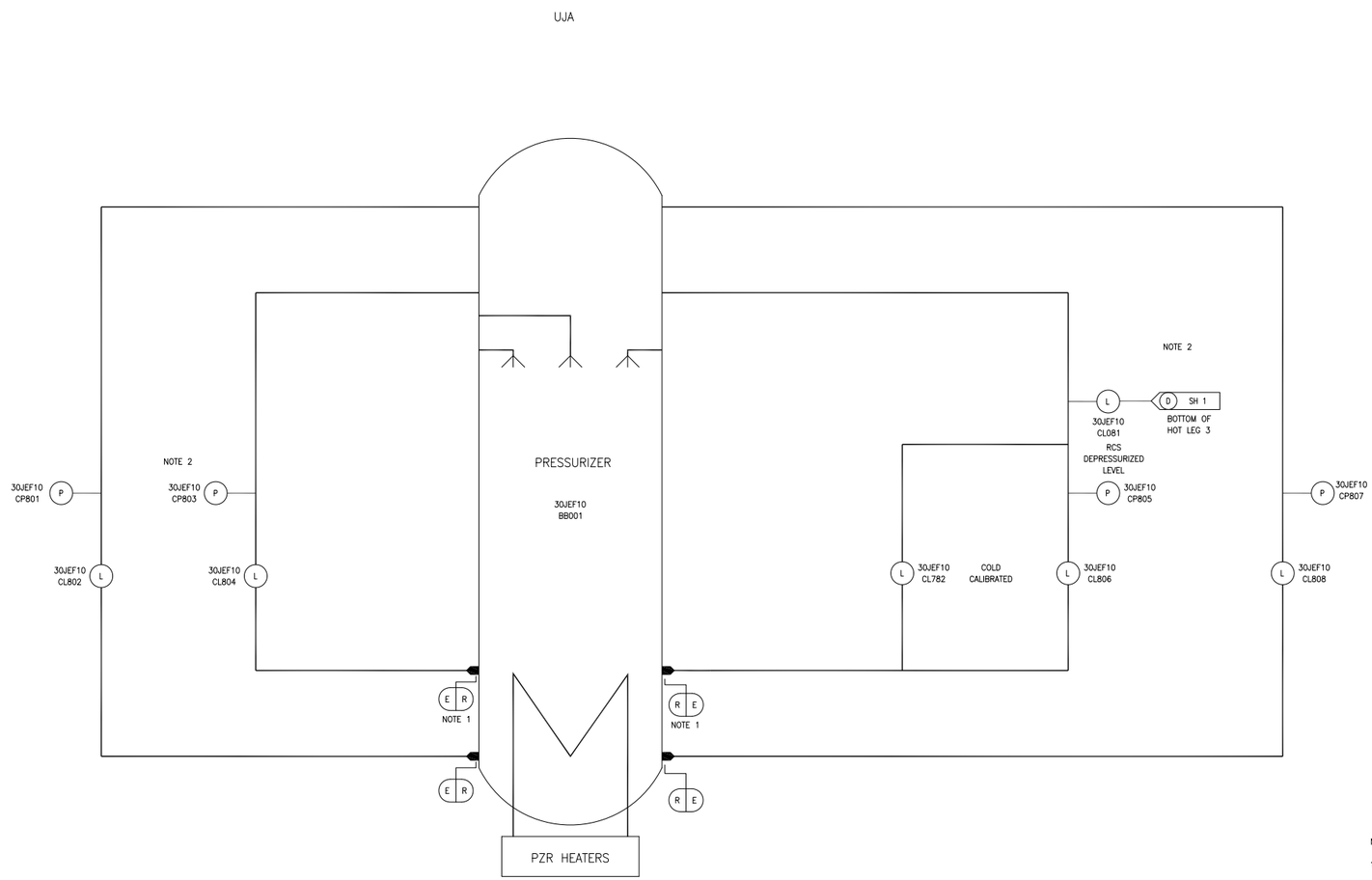

JEF – REACTOR COOLANT PRESSURIZING SYSTEM

UJA – REACTOR BUILDING

NOTES:

1. FLOW RESTRICTOR INTEGRATED IN THE NOZZLE ALLOWS CONNECTION LINES TO BE QUALITY GROUP B.

2. CLASS BREAK TO QUALITY GROUP B AT CONDENSATE POT (NOT SHOWN).

R	A	2535	684	I
E	B	2535	684	I
DESIGN AREA	SSC QUALITY GROUP	DESIGN PRESSURE PSIG	DESIGN TEMPERATURE °F	SSC SEISMIC CLASS

REV 002
JEX05T2

Figure 5.1-4—RCS Piping and Instrumentation Diagram
Sheet 6 of 7

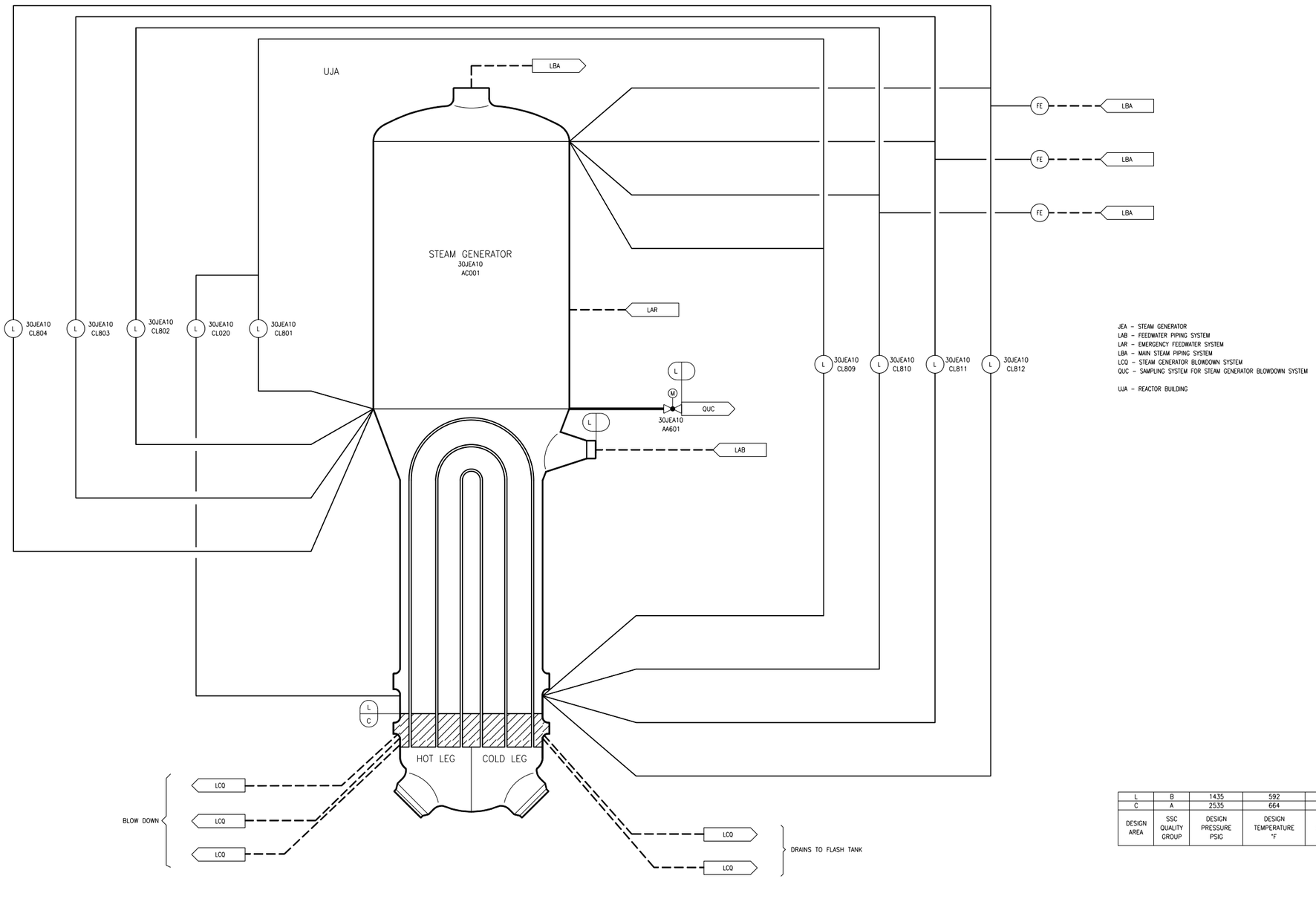

L	B	1435	592	I
C	A	2535	664	I
DESIGN AREA	SSC QUALITY GROUP	DESIGN PRESSURE PSIG	DESIGN TEMPERATURE °F	SSC SEISMIC CLASS

Figure 5.1-4—RCS Piping and Instrumentation Diagram
Sheet 7 of 7

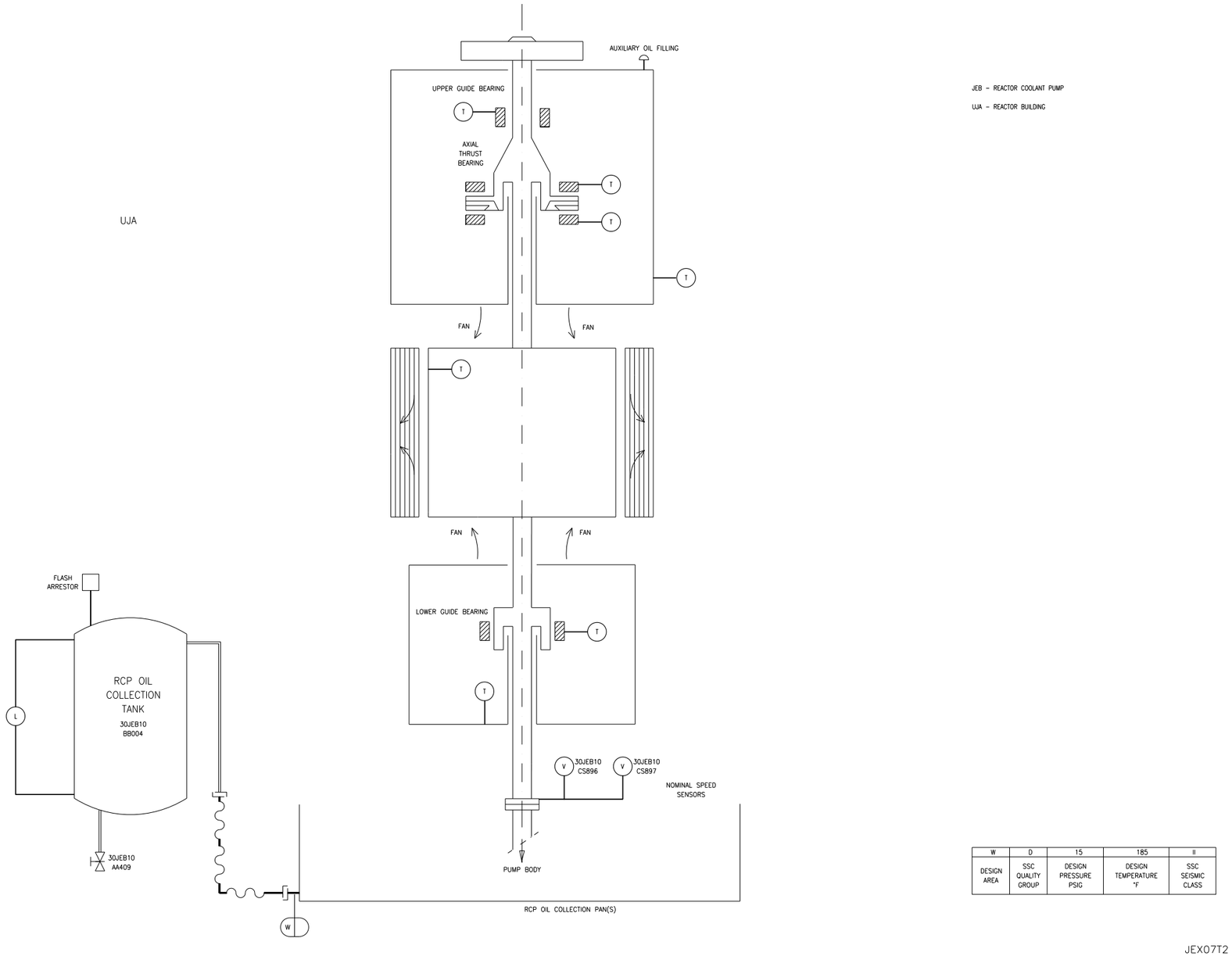

Next File