CHAPTER 10.0 - STEAM AND POWER CONVERSION SYSTEM

TABLE OF CONTENTS

	PAGE
10.0 STEAM AND POWER CONVERSION SYSTEM	10.1-1
10.1 SUMMARY DESCRIPTION	10.1-1
10.1.1 System Layout	10.1-1
10.1.2 Design	10.1-1
10.1.3 Governing Design Codes for Steam and Power Conversion System	10.1-2
10.1.4 Instrumentation	10.1-2
10.2 TURBINE-GENERATOR	10.2-1
10.2.1 Design Bases	10.2-1
10.2.2 Design Description	10.2-1
10.2.2.1 Turbine	10.2-1
10.2.2.2 Generator	10.2-2
10.2.2.2.1 Hydrogen Storage and Distribution System	10.2-2
10.2.2.3 Turbine-Generator Controls	10.2-4
10.2.2.4 Turbine Protective Devices	10.2-4
10.2.2.4.1 Overspeed Protection	10.2-5
10.2.2.4.2 Additional Protective Features	10.2-10
10.2.2.5 Tests and Inspection	10.2-10
10.2.3 Turbine Disc and Rotor Integrity	10.2-11
10.2.3.1 Material Selection	10.2-11
10.2.3.2 Fracture Toughness	10.2-12
10.2.3.3 High Temperature Properties	10.2-13
10.2.3.4 Turbine Disc Design	10.2-13
10.2.3.5 Preservice Inspection	10.2-13
10.2.3.6 Inservice Inspection	10.2-14
10.2.3.7 Disc Modifications	
10.2.4 Evaluation (BWR)	10.2-15
10.2.5 References	10.2-15
10.3 MAIN STEAM SUPPLY SYSTEM	10.3-1
10.3.1 Design Bases	10.3-1
10.3.2 Design Description	10.3-2

TABLE OF CONTENTS (Cont'd)

	PAGE
10.3.3 Design Evaluation	10.3-6
10.3.3.1 Effects of Main Steam Isolation Valve Closure	10.3-6
10.3.4 Inspection and Testing	10.3-7
10.3.4.1 Shop Tests	10.3-7
10.3.4.2 Operational Tests	10.3-7
10.3.5 Water Chemistry	10.3-8
10.3.5.1 Methods of Treatment	10.3-8
10.3.5.2 Water Chemistry Control	10.3-8
10.3.5.3 Corrosion Control Effectiveness	10.3-9
10.3.5.4 Effect of Chemistry Control on Iodine Partition	10.3-9
10.3.5.5 Secondary Water Chemistry Monitoring	10.3-9
10.3.6 Steam and Feedwater System Materials	10.3-10
10.3.6.1 Fracture Toughness	10.3-10
10.3.6.2 Materials Selection and Fabrication	10.3-10
10.3.7 References	10.3-11
10.4 OTHER FEATURES OF STEAM AND POWER CONVERSION SYSTEM	10.4-1
10.4.1 Main Condensers	10.4-1
10.4.2 Main Condenser Evacuation Systems	10.4-3
10.4.3 Turbine Gland Sealing System	10.4-4
10.4.4 Steam Dump (or Bypass) System	10.4-5
10.4.5 Circulating Water System (Byron)	10.4-8
10.4.5 Circulating Water System (Braidwood)	10.4-12
10.4.6 Condensate Cleanup System	10.4-14
10.4.6.1 Design Bases	10.4-14
10.4.6.2 System Description	10.4-14
10.4.6.2.1 General Description and System Operation	10.4-14
10.4.6.2.2 Component Description	10.4-15
10.4.6.2.2.1 Mixed Bed Polisher	10.4-15
10.4.6.2.2.2 Resin Separation and Cation Regeneration (Byron)	10.4-15a
10.4.6.2.2.2 Resin Separation and Cation Regeneration Tank (Braidwood)	10.4-15b
10.4.6.2.2.3 Anion Regeneration Tank	10.4-16
10.4.6.2.2.4 Resin Mix and Storage Tank	10.4-16
10.4.6.2.2.5 Regeneration Equipment	10.4-16
10.4.6.2.2.6 Sluice Water Pumps	10.4-16
10.4.6.2.2.7 Ultrasonic Resin Cleaner	10.4-16
10.4.6.2.2.8 Condensate Polisher Sump	10.4-17
10.4.6.3 Safety Evaluation	10.4-17
10.4.6.4 Testing and Inspection	10.4-17
10.4.7 Condensate and Feedwater System	10.4-17
10.4.7.1 Design Bases	10.4-18
10.4.7.1.1 Safety Design Bases	10.4-18
10.4.7.2 System Description	10.4-18

TABLE OF CONTENTS (Cont'd)

	PAGE
10.4.7.3 Water Hammer Prevention Features	10.4-21
10.4.7.3.1 Startup, Low Load Conditions	10.4-21
10.4.7.3.2 Increasing Load	10.4-21

TABLE OF CONTENTS (Cont'd)

	PAGE
10.4.7.3.3 Split Feedwater Flow	10.4-23
10.4.7.3.4 Other Upper Nozzle Feedwater Line Uses	10.4-23
10.4.7.4 Safety Evaluation	10.4-23
10.4.7.5 Tests and Inspections	10.4-24
10.4.7.6 Instrumentation Application	10.4-24
10.4.8 Steam Generator Blowdown System	10.4-24a
10.4.8.1 Design Bases	10.4-25
10.4.8.2 System Description and Operation	10.4-26
10.4.8.3 Safety Evaluation	10.4-27
10.4.8.4 Tests and Inspections	10.4-28
10.4.9 Auxiliary Feedwater Systems	10.4-28
10.4.9.1 Design Basis	10.4-28
10.4.9.1.1 General	10.4-28
10.4.9.1.2 Performance Basis	10.4-29
10.4.9.2 System Description	10.4-33
10.4.9.2.1 Major Components Description	10.4-34
10.4.9.2.1.1 Direct Diesel Engine Drive	10.4-34
10.4.9.2.1.2 Auxiliary Feedwater Pump Suction Valves	10.4-35
10.4.9.2.1.3 Steam Generator Auxiliary Feedwater Valves	10.4-35
10.4.9.2.1.4 Auxiliary Feedwater Flow Control	10.4-36
10.4.9.3 Safety Evaluation	10.4-37
10.4.9.3.1 General	10.4-37
10.4.9.3.2 Performance for Limiting Transients	10.4-38
10.4.9.3.3 Conformance with NRC Regulatory Guidance	10.4-40
10.4.9.4 Inspection and Testing Requirements	10.4-40
10.4.9.5 Instrumentation Application	10.4-41
10.4.9.5.1 Auxiliary Feedwater Pumps	10.4-41
10.4.10 References	10.4-42

ATTACHMENT 10.A Deleted

ATTACHMENT 10.B Deleted

ATTACHMENT 10.C AN EVALUATION OF THE AUXILIARY FEEDWATER SYSTEM TO SECTION 10.4.9 OF THE STANDARD REVIEW PLANS AND BRANCH TECHNICAL POSITION ASB 10-1

ATTACHMENT 10.D AN EVALUATION OF THE AUXILIARY FEEDWATER SYSTEM TO THE NRC GENERIC SHORT-TERM AND LONG-TERM REQUIREMENTS

CHAPTER 10.0 - STEAM AND POWER CONVERSION SYSTEM

LIST OF TABLES

NUMBER	TITLE	PAGE
10.1-1	Steam and Power Conversion System Design Features	10.1-3
10.2-1	Closure Times for Main Turbine Valves	10.2-16
10.2-2	Closure Time for Air-Operated Check Valves in Heater Drain and Extraction Steam Systems	10.2-17
10.2-3	Closure Time for Motor-Operated Stop Valves in the Extraction Steamlines	10.2-18
10.2-4	Required Properties of Westinghouse Turbine Discs Compared With ASTM A-471	10.2-19
10.2-5	Required Properties of Westinghouse Turbine HP Rotors Compared with ASTM A-470	10.2-20
10.4-1	Condenser Performance Characteristics	10.4-43
10.4-2	Deleted	
10.4-3	Deleted	
10.4-4	Auxiliary Feedwater System Failure Modes-Effect Analysis	10.4-47
10.4-5	Criteria for Auxiliary Feedwater System Design Basis Conditions	10.4-49
10.4-6	Summary of Assumptions Used in AFWS Design Verification Analyses	10.4-50
10.4-7	Summary of Sensible Heat Sources	10.4-52
10.4-8	Auxiliary Feedwater Flow to Steam Generators Following an Accident/ Transient with Selected Single Failure - GPM	10.4-53

CHAPTER 10.0 - STEAM AND POWER CONVERSION SYSTEM

LIST OF FIGURES

NUMBER	TITLE
10.1-1	Steam, Condensate, and Feedwater Piping - Unit 1
10.1-1a	Steam, Condensate, and Feedwater Piping - Unit 2
10.1-2	Deleted
10.1-2a	Byron and Braidwood Unit 1 Heat Balance (WB-7342)
10.1-2b	Byron and Braidwood Unit 2 Heat Balance (WB-7347)
10.2-1	Ultrasonic Inspection of Rough Machined Turbine Discs
10.2-2	Deleted
10.2-3	Deleted
10.2-4	Deleted
10.2-5	Deleted
10.2-6	Deleted
10.2-7	Deleted
10.3-1	Deleted
10.4-1	Deleted
10.4-2	Deleted
10.4-3	Steam Generator Mass vs. Time Loss of Main Feedwater
10.4-4	Steam Generator Mass vs. Time Feedline Break with Offsite Power Available

CHAPTER 10.0 - STEAM AND POWER CONVERSION SYSTEM

DRAWINGS CITED IN THIS CHAPTER*

*The listed drawings are included as "General References" only; i.e., refer to the drawings to obtain additional detail or to obtain background information. These drawings are not part of the UFSAR. They are controlled by the Controlled Documents Program.

DRAWING*	SUBJECT
108D685-7	Steam Generator Trip Signals Diagram
108D685-10	Steam Dump Controls Diagram
M-20	General Arrangement River Screen House Units 1 & 2
M-35	Diagram of Main Steam System Unit 1
M-36	Diagram of Main Feedwater System Unit 1
M-37	Diagram of Auxiliary Feedwater System Unit 1
M-58	Diagram of CO_2 & H_2 System Units 1 & 2
M-42	Diagram of Essential Service Water System Units 1 & 2
M-42A	Composite Diagram of Essential Service Water System Units 1 & 2
M-48	Diagram of Waste Disposal Units 1 & 2
M-48A	Composite Diagram of Liquid Radwaste Treatment Processing Units 1 & 2
M-900	Outdoor Piping Essential Service Water at Cooling Towers (Byron)

CHAPTER 10.0 - STEAM AND POWER CONVERSION SYSTEM

10.1 SUMMARY DESCRIPTION

10.1.1 System Layout

Equipment arrangement and fluid flows are shown diagrammatically in Figure 10.1-1 along with major line sizes and safety categories. Table 10.1-1 summarizes important design features and safety aspects. Figure 10.1-2a and 10.1-2b are the heat balance diagrams for the uprated power conditions. The units are designed to operate under the economic generation control system.

10.1.2 Design

After passing through the turbine, the steam exhausts into the shell side of a condenser, where the normal average backpressure is approximately 3.5 in. Hg abs. The condensed steam is pumped via condensate/condensate booster and feedwater pumps through seven stages of feedwater heating and back to the steam generators. In its passage through the turbine, the steam undergoes a moisture separation and reheating process; portions of the steam are extracted from the main turbine to the feedwater heaters for regenerative heating of the feedwater. The steam is condensed in the main condenser by circulating water flowing through the condenser tubes; the heat added to the circulating water is then rejected to a natural draft cooling tower at Byron Station, and a cooling lake at Braidwood Station, before the water returns to the main condenser.

The steam and power conversion system is a closed cycle. Condensate is drawn from the hotwell of the condenser and pumped via the condensate pumps through the steam jet air ejector condensers and gland steam condensers. This condensate is pumped via the condensate booster pumps through four stages of low pressure feedwater heaters. This flow is then mixed with the discharge of the heater drain pumps and the combined flow passes through a fifth and sixth stage of low pressure feedwater heaters. From this point the water is pumped via the feedwater pumps through one stage of high pressure feedwater heaters through the feedwater regulating valves to the steam generator.

In the steam generators the feedwater is converted to steam. The steam exits the steam generators via the main steamlines which are equipped with power-operated atmospheric relief valves, safety valves, and isolation valves. From this point the steam passes via piping inside a tunnel through combination stop and throttle valves and governor valves to the high pressure turbine. High pressure turbine exhaust is routed through two stage moisture separator reheaters, reheat stop valves, and interceptor valves to the low pressure turbine.

Throughout the portion of the steam cycle downstream of the isolation valves, steam is extracted at various points to operate auxiliaries and to supply heat to the condensate and feedwater heaters. Steam used for these purposes is returned to the cycle for reuse.

Steam exhausted from the low pressure turbine at approximately 3.5 in. Hg is condensed to condensate in a surface type condenser and the condensate drains to the hotwell where the cycle begins again.

10.1.3 Governing Design Codes for Steam and Power Conversion System

The design of piping, valves, containment penetrations, and equipment on the steam generator side of the containment isolation valves, including the isolation valves, in both the main steam and feedwater lines is Safety Category I, Quality Group B. The design of piping, valves, and equipment in the remainder of the steam and power conversion system is Safety Category II, Quality Group D.

10.1.4 Instrumentation

Instrumentation systems for the normal operating conditions of the steam and condensate systems are designed in accordance with accepted secondary cycle design for safe and reliable control, requirements for performance calculations, and periodic heat balances. Instrumentation for the secondary cycle are also provided to meet recommendations by the turbine supplier and ASME Standard No. TWDPS-1 Part 2, 1973, "Recommended Practices for the Prevention of Water Damage to Steam Turbines." Other recommendations by the NSSS supplier for prevention of water hammer in the steam generator are also part of the design bases. Continuous sampling system instrumentation and grab sample points are provided for maintaining acceptable limits of water chemistry in the secondary cycle as required by the NSSS and turbine suppliers. Condenser conductivity sampling is provided for tube/sheet leakage detection to meet requirements to identify and promptly isolate leakage in the condenser.

Safety-related instrumentation systems for steam generator level and main steamline pressure are designed and supplied by the NSSS supplier and identified in Chapter 7.0.

TABLE 10.1-1

STEAM AND POWER CONVERSION SYSTEM DESIGN FEATURES

ITEM	SAFETY-RELATED	COMMENTS
Main Steam Piping	Yes	Piping is Safety Category I from steam generators to and including main steam isolation valves. The remainder of the piping is Safety Category II.
Main Steam Relief and Safety Valves	Yes	Safety Category I
Steam Generator Blowdown System	Yes	System is Safety Category I from the steam generators to the outermost containment isolation valve. The remainder of the system is Safety Category II.
Main Turbine	No	Switch contacts are provided as interface with Reactor Protection System in event of turbine trip.
Generator	No	
Turbine Protection System	No	
Reheat Steam System	No	
Condenser	No	
Turbine Steam Dump System	No	
Turbine Gland Sealing System	No	
Main Condenser Evacuation System	No	
Circulating Water System	No	
Condensate System	No	

TABLE 10.1-1 (Cont'd)

ITEM	SAFETY-RELATED	COMMENTS
Feedwater System	Yes	Feedwater lines are Safety Category I between the FW bypass isolation valves and the steam generators.

10.2 TURBINE-GENERATOR

10.2.1 Design Bases

The turbine-generator is designed to produce a maximum guaranteed output of 1,242,039 kW (Bryon/Braidwood Units 1) or 1,210,395 kW (Bryon/Braidwood Units 2) when supplied with a steam flow of approximately 16,026,608 lb/hr (Byron/Braidwood Units 1) or 15,958,134 lb/hr (Byron/Braidwood Units 2) (including steam for reheating and gland sealing) at a pressure of 1004 psia (Byron/Braidwood Units 1) or 869 psia (Bryon/Braidwood Units 2), 0.22% moisture (Byron/Braidwood Units 1) or 0.24% (Byron/Braidwood Units 2), and exhausting at 3.5 in. Hg abs condenser backpressure, and 0% makeup. Operation at reduced power may be required under certain circumstances. Both base-loaded and load-following modes of operation are employed depending upon conditions existing in the grid system at a particular time.

"Load following" is accomplished by applying a load demand signal to the turbine control system, which in turn demands more or less steam from the NSSS. The NSSS is guaranteed by the manufacturer to be capable of following a 5%-per-minute load-change in the load range of 15% to 100% power, which is within the load-changing capability of the turbine. Additionally, the NSSS-turbine combination can accept a maximum step load rejection from 100% to 50% power without reactor trip. The steam dump system (Subsection 10.4.4) is used to avoid reactor trip in this situation. This load-changing capability is adequate for the intended modes of plant operation.

Design codes are discussed in Subsection 10.1.3.

10.2.2 Design Description

A composite flow diagram of the steam and power conversion system is provided in Figure 10.1-1.

10.2.2.1 Turbine

The turbine is an 1800-rpm, tandem-compound machine employing one high-pressure and three low-pressure double-flow steam expansion stages mounted on a common shaft. It is manufactured by Westinghouse Turbine Division, Philadelphia, Pennsylvania. The low-pressure stages employ last-row blades 40 inches long. Steam exhaust flow is downward from the three low-pressure stages into the condenser. Combination moisture separator-reheaters (MSRs) are provided between the high- and low-pressure stages to dry and reheat the steam.

Seven stages of feedwater heating are employed, six low-pressure and one high-pressure. The two main feedwater pumps are turbine-driven and use steam provided by the main steam and turbine steam systems. The turbine drives are equipped with electrohydraulic governors similar to the main turbine, and derive high-pressure fluid from the main turbine electrohydraulic fluid supply system. A motor-driven feedwater pump of the same capacity as each turbine driven pump is provided.

10.2.2.2 Generator

The synchronous generator is innercooled with hydrogen at 75 psig and has a water-cooled stator. It is rated at 1,361,000 kVA, 0.9 power factor, 25,000 volts, three-phase, 60 Hz, and 0.5 short-circuit ratio. The main exciter is direct shaft-driven, air-cooled, and brushless; it consists of a permanent magnet pilot exciter, an a-c exciter, a diode and fuse wheel (connected to the generator shaft), and associated excitation switchgear. The static voltage regulator has a response ratio of 0.5.

10.2.2.2.1 Hydrogen Storage and Distribution System

The hydrogen system provides hydrogen gas for use by the generator and the volume control tanks. This system consists of a bulk hydrogen storage facility, a hydrogen control cabinet, and the piping to the components supplied, including the generator and the volume control tanks. The system is non-safety-related and designed in accordance with NFPA 50A and NML guidelines. Provisions to reduce the risks of fire and explosions are described in the Fire Protection Report.

The bulk hydrogen storage facility is located outside near the bulk liquid nitrogen storage facility on the heater bay side of the turbine building. A fence encircles the bulk hydrogen storage facility; gates provide access for tractor trailers. The storage consists of two hydrogen tube trailers containing approximately 100,000 scf of hydrogen. Fill stanchions are used to hook the hydrogen tube trailers to the hydrogen control cabinet. Grounding wire connections are provided for both the fill stanchion and the hydrogen tube trailers. The grounding wires run to a copper grounding rod located away from the bulk hydrogen storage facility. Drawing M-58 provides a description of the hydrogen supply system. Drawing M-900 shows the location of the storage facilities at each site. Two local reading pressure indicators are provided on the hydrogen supply piping to the hydrogen control cabinet. Each pressure indicator provides visual indication of its respective reserve storage piping pressure.

Three pressure regulating valves and an excess flow manifold make up the hydrogen control cabinet. Each pressure regulating valve is set at a different pressure.

One pressure regulating valve (OHY001A) reduces the discharge pressure from the inservice active storage tube trailer to 125 psig. The second tube trailer is not aligned to the hydrogen control cabinet until the depletion of the inservice trailer.

If the pressure of the tube trailer supply hydrogen drops below 115 psig, pressure regulating valve OHY001B opens to supply hydrogen from the reserve storage Number 1 at 115 psig. When this occurs, operator action is required to open the standby tube trailer fill stanchion isolation valve. This will increase the discharge line pressure causing valve OHY001B to shut. If the pressure within the hydrogen control cabinet drops below 100 psig, pressure regulating valve OHY001C opens, supplying hydrogen from the reserve storage Number 2. The discharge piping from the pressure regulating valves combine into a common header which directs the hydrogen through the excess flow manifold. The manifold consists of an inlet and outlet valve, excess flow valve OHY028, and a bypass valve. The excess flow valve is positioned such that it allows only 20,000 scf of hydrogen to flow through the manifold per hour. This provides protection in the event of a hydrogen line break within the plant.

Hydrogen from the hydrogen gas system passes through a pressure reducing valve. The pressure reducing valve supplies hydrogen at 75 psig to the hydrogen manifold in the top of the generator. High and low alarms indicate abnormal gas pressures. A 1-1/2-inch pipe directs the hydrogen leaving the excess flow manifold to the main generator and to the hydrogen supply manifold.

Hydrogen is also supplied through another pressure reducer to the stator cooling water tank. The cooling water tank is pressurized with hydrogen to prevent air from coming in contact with the cooling water.

A 1-inch line off of the hydrogen supply line to the generators provides hydrogen to the volume control tank. During normal plant operations hydrogen at a pressure of from 15 to 20 psig is used as a cover gas in the volume control tank. Certain plant evolutions or conditions may require RCS dissolved hydrogen concentration to be increased to no greater than 50 cc/Kg H_20. To achieve an increase in RCS dissolved hydrogen, volume control tank pressure may be raised to approximately 30 psig. This hydrogen is absorbed into the liquid volume of the tank, thus providing the hydrogen inventory needed in the reactor coolant to scavenge oxygen. A more detailed discussion is provided in Subsection 9.3.4 on the use of hydrogen in the volume control tank.

When the generator shaft is rotating, the hydrogen is circulated by an axial, multistage blower mounted on the generator shaft at the exciter end. Hydrogen leaves the blower and passes through one of four fin-tube hydrogen coolers. The hydrogen coolers are single-pass, double-sectioned, fin-tube heat exchangers. Four of them are mounted inside of the generator casing on the high pressure side of the hydrogen blower. Hydrogen flows around the finned tubes, giving up its heat to the nonessential service water that flows through the tubes. Valve 1WS106 controls the flow of nonessential service water leaving the hydrogen coolers.

A resistance temperature detector measures the temperature of the hydrogen leaving the hydrogen coolers and sends a signal to a signal converter. The converter changes the electronic signal to a pneumatic signal that is sent to the actuator on valve 1WS106. In this way, the temperature of the hydrogen leaving the coolers is kept relatively constant.

The cooled gas leaves the coolers and is carried by ducts to the opposite end of the generator to cool the housing and then back through vent tubes in the stator coils to the blower. Some of the gas bypasses the ducts to flow around the stator core and cool the rotor windings.

10.2.2.3 Turbine-Generator Controls

The turbine is equipped with a digital electrohydraulic control system consisting of a redundant fault tolerant Ovation distributed control system (DCS) and a high-pressure, fire resistant fluid supply used for the control of turbine valve operators. The DCS receives four feedback loops: speed, MW, first stage pressure and NIS power. The NIS power range channels were added to create a frequency droop limiter function based on the reactor power level. This system provides operators immediate localized access (through the human machine interface workstations) for all major control functions (i.e., turbine trip, load limit control, valve testing, speed, load control and overspeed protection systems).

The turbine governor valves, reheat stop valves, and steam interceptor valves are preceded by main turbine stop-throttle valves. The principal function of the stop throttle valves is to shut off the steam supply to the turbine in the event of a turbine trip. The various trip signals and actuators are described in Subsection 10.2.2.4.

THIS PAGE WAS INTENTIONALLY DELETED

10.2.2.4 Turbine Protective Devices

Protective devices are provided in the turbine controls to trip the turbine. The following signals actuate trips causing closure of all turbine steam admission valves (main turbine stop-throttle and governor valves; reheat stop and interceptor valves):

a) turbine bearing oil low-pressure trip,

b) turbine condenser low vacuum trip,

c) turbine thrust bearing trip,

d) manual turbine trip from control room,

e) redundant electrical trips from the emergency trip system, and

f) electrical manual turbine trip at the turbine front standard.

THIS PAGE WAS INTENTIONALLY DELETED

10.2.2.4.1 Overspeed Protection

There are three independent overspeed protection systems. The Braun system uses three turbine speed channels, each with its own magnetic speed pickup, arranged in a two out of three logic configuration. The turbine overspeed hard and soft logic is also provided in the Ovation emergency trip system and operator auto controllers. The Ovation speed detector modules sense turbine speed. There are three modules per controller. These controllers use two out of three logic from the turbine speed

channels for overspeed sensing and tripping. As a result, a malfunction in any one of these channels will not cause an invalid trip or prevent a valid trip. Logic is also provided in the controllers to detect and identify a malfunction in the speed pickups.

The overspeed control, using two out of three logic, will slow the turbine by energizing the OPC solenoids, which will in turn close the governor valves and intercept valves when turbine speed exceeds 103%. The normal overspeed protection control is designed to regulate the turbine speed back to within normal range and avoid a turbine overspeed trip. A diagram of the turbine protection system is shown in Figure 7.1-4.

The throttle-governor valves and interceptor-reheat stop valves are arranged in series such that a failure of any one valve has no effect on turbine overspeed. Six extraction steamlines are provided with air-operated check valves and motor-operated gate valves. Stable turbine rundown after trip is therefore assumed. The ASME paper, entitled “Turbine Water Damage Prevention”, may be referenced for the design of the extraction steam system. Closure times for the main turbine and extraction steamline valves are listed in Tables 10.2-1, 10.2-2, and 10.2-3.

THIS PAGE WAS INTENTIONALLY DELETED

THIS PAGE WAS INTENTIONALLY DELETED

THIS PAGE WAS INTENTIONALLY DELETED

10.2.2.4.2 Additional Protective Features

Additional protective features are provided as follows:

a. automatic load runback initiated by an overtemperature ΔT signal or an overpower ΔT signal,

b. turbine trip initiated by loss of flow of stator cooling water,

c. turbine trip following a reactor trip,

d. turbine trip following an AMS initiation (described in Subsection 7.7.1.21),

e. main steam isolation valve in each steam generator outlet main steamline (described in Subsection 10.3.2),

f. safety valves in each steam generator outlet main steamline (described in Subsection 10.3.1),

g. safety valves in the moisture separator-reheater inlet piping,

h. actuation of the extraction steam check valves from the turbine hydraulic fluid system via an air pilot valve which dumps the air pressure for each air-operated extraction steam check valve,

i. power operated main steam relief valves (described in Subsection 10.3.1), and

j. turbine steam dump valves (described in Subsection 10.4.4).

10.2.2.5 Tests and Inspection

A functional test of the turbine steam inlet valves is performed periodically. These tests are made while the unit is carrying load. The purpose of the tests is to ensure proper operation of throttle, governor, reheat stop, and interceptor valves. These valves are observed during the tests for smoothness of movement. Operation of these valves while the plant is at power may result in unnecessary transient loading on the turbine generator system or reactor trips. To increase the reliability of these valves, operability is checked as part of the normal turbine generator startup procedure.

A schedule of valve inspection at periodic intervals for throttle, governor, reheat stop, and interceptor valves has been implemented. The extraction steam valves fall under ANSI B31.1 rules which do not require inservice inspection or testing. These valves are classified as non-safety-related components. Although these valves could be operated during an accident, no credit is taken for operability of these valves in any safety

analysis. Failure of these valves does not affect the safe shutdown capability of the plant. The term "inservice inspection program" is used only to refer to those programs which pertain to safety-related systems. Thus, there is not an "inservice inspection program" for the throttle, governor, reheat stop, interceptor, and extraction steam valves.

10.2.3 Turbine Disc and Rotor Integrity

The following information presents the turbine manufacturer's standards for turbine discs and rotors. This information documents conformance with the acceptance criteria (Subsection II) of standard review plan 10.2.3, "Turbine Disc Integrity."

The probability of missile generation from nuclear high-pressure and low-pressure rotors was evaluated for four failure mechanisms: destructive overspeed bursting, high cycle fatigue, low cycle fatigue and stress corrosion cracking (SCC). The probability of failure due to the rotor reaching destructive overspeed is determined by the reliability of the control system, and is not discussed in this section. Of the remaining mechanisms, SCC was found to be the dominant mechanism for determining the potential for missile generation. The probability of missile generation by this mechanism is not to exceed 10^{-5} by NRC criteria. Analysis has shown that periodic inspections are required to meet these NRC safety guidelines.

10.2.3.1 Material Selection

Forgings produced for nuclear turbine discs and rotors are made to comply with the manufacturer's specifications. More general ASTM specifications for discs (A-471 c1.1-9) and for rotors (A-470 cl. 5-7) do exist and may be used for guidance. The material used for the discs and rotors is a nominal 3.5% Ni, 1.7% Cr, 0.5% Mo, 0.1% V composition, with less than 0.015% sulfur and phosphorus. These materials are melted in basic electric furnaces and are vacuum carbon deoxidized to minimize the level of objectionable gases, such as hydrogen, and also to keep the Si content at a low level, which improves toughness.

Sufficient discard is taken from the top and bottom of each ingot to remove the most heavily segregated material. Several forging operations are performed, usually including blocking and upsetting operations. The axial center of the ingot is kept in common with the center of the forging during these operations. The as-forged dimensions of each forging are made as close as possible to the finished machined dimensions.

The forgings are then given a preliminary heat treatment consisting of a single or double normalize and temper to refine the structure. After rough machining to heat treating dimensions, the forgings are austenitized, quenched, and tempered to produce the desired properties. For discs, the tensile and impact properties are then determined at both the rim and the bore of the forgings.

The disc material property requirements are listed in Table 10.2-4 along with the comparable ASTM requirements for ASTM A-471. A minimum of six impact specimens is used to determine the fracture appearance transition temperature (FATT) in accordance with ASTM A-370. Rotor tensile and impact properties are determined at both ends and the middle of the forgings. The high-pressure rotor material property requirements are listed in Table 10.2-5 along with comparable ASTM requirements for ASTM A-470. Eight impact specimens are used to determine the FATT at each end in accordance with ASTM A-370.

After heat treatment, all discs are ultrasonically inspected to ensure freedom from harmful internal defects. Because discs are contoured before heat treatment, certain areas cannot be reliably tested using ultrasonic techniques. In a typical disc these areas are the radii in the contour areas as are shown in Figure 10.2-1. All ultrasonic indications are evaluated by Siemens Westinghouse. After finish machining of the disc forging, the disc is 100% surface inspected (excluding the blade grooves) using a fluorescent magnetic particle technique. Magnetic particle indications on surfaces exposed to a steam environment are not permitted.

After heat treatment for properties, the rotors are ultrasonically inspected to ensure freedom from harmful internal defects. After finish machining, the external surfaces (excluding blade grooves) are fluorescent magnetic particle inspected. The finished bore is visually and magnetic particle inspected to determine if there is freedom from surface discontinuities.

The fracture appearance transition temperature (50% FATT) is obtained from Charpy tests performed in accordance with specification ASTM A-370. The manufacturer requires that the FATT be no higher than 0°F for the low-pressure disc and 30°F for the Siemens Westinghouse-C, ASTM, cl. 7 high-pressure rotor.

Charpy V-notch (C_V) energy at room temperature of each low-pressure disc is at least 50 ft-lb. The C_V energy of high-pressure rotor materials at room temperature is at least 40 ft-lb.

Any deviation from specification requirements for material composition and properties is evaluated by the manufacturer and reported to Exelon Generation Company.

10.2.3.2 Fracture Toughness

the manufacturer performed a fracture mechanics analysis of the discs to establish critical flaw size. Critical flaw sizes are determined from maximum bore stresses, assuming conservative crack geometry in the bore and keyway areas, and fracture toughness of the disc material. Fracture toughness (K_{IC}) values are obtained from a correlation with Charpy properties as described in Reference 1.

The probability of generating a missile is the combined probability of rupturing a disc among those that would possess sufficient residual energy to perforate the turbine housing. The principal inputs to this risk assessment are critical flaw size, crack growth rate and the probability of crack initiation.

The crack growth rate model was formulated using regression analysis relating crack growth rate data from operating and laboratory experience to disc temperature and yield strength. Due to observed differences in crack growth rate between bores and keyways, different regression equations were developed for each.

The probability of crack initiation is statistically derived from inservice inspection results, which are discussed elsewhere in this document.

10.2.3.3 High-Temperature Properties

Because the turbines do not operate above 560°F, tests to determine stress rupture properties are not required to be performed.

10.2.3.4 Turbine Disc Design

The highest anticipated speed resulting from a loss of load is less than 110% of rated speed. The rotor is spin tested at 120% of rated speed.

At a speed of 115%, the average tangential stress in low-pressure discs or high-pressure rotors due to centrifugal force, interference fit, and thermal gradients does not exceed 0.75 of the minimum specified yield strength of the material.

The rotors are designed so that the response levels at the natural critical frequency of the turbine shaft assemblies are controlled between zero speed and 20% overspeed.

10.2.3.5 Preservice Inspection

Discs are rough machined as close as practical to the forging drawing dimensions prior to heat treatment for obtaining the

required physical properties. After heat treatment, the forgings are machined to the dimensions of the forging drawing and stress relieved.

Rotors are rough machined with minimum stock allowance prior to heat treatment and stress relief.

After heat treatment, the rough machined discs are ultrasonically inspected on the flat surfaces of the hub and the rim (see Figure 10.2-1). If ultrasonic indications are detected in the hub or the rim sections, additional ultrasonic testing may be required in the web section. These ultrasonic tests are defined by a Siemens Westinghouse specification whose requirements are similar to those of ASTM A-418.

The rotors are ultrasonically tested after heat treatment and rough machining. The sonic indications are either removed or evaluated to assure that they will not grow to a size that will compromise the integrity of the component during its service life.

The finished bores are given a visual examination followed by a wet magnetic particle inspection, defined in detail by a manufacturing specification whose requirements are similar to those of ASTM A-275.

Except for blade grooves, the finished machined discs are fluorescent magnetic particle inspected. The disc is shrunk onto the shaft. In the original design, after the disc is cooled, equally spaced round-bottomed holes or keyways are drilled and reamed and are inspected using dye penetrant techniques. No indications are allowed in the bore or keyway regions. Keys are then inserted. These keys were sized to carry disc torque in the unlikely event that shrink fit was lost.

Each fully bladed rotor assembly is spin tested at 120% of rated speed. The maximum speed anticipated following a turbine trip from full load is less than 110% of rated speed.

Beginning in 1979, high incidence of stress corrosion cracking was noticed at the disc keyways. This was the result of high peak stresses at the apex of the keyway, and contaminates which formed at the crevice between the pin and hole. This led to the development of the keyplate design feature to replace the disc bore keyways for shrunk-on low-pressure disc designs. Reference Section 10.2.3.7 for description of these modifications.

10.2.3.6 Inservice Inspection

The timing of the turbine inspection program is determined by Exelon Generation Company. In making this determination, it seems advisable to consider not only the element of time interval, but fracture mechanics criteria as well (e.g., the number of cycles of operation during which the discs may have experienced high stress).

The bore of the high-pressure rotors can be inspected with the rotors removed from the cylinder, as can the low-pressure discs. At the present time, there is no reliable method for inservice inspection of keyways and bores of discs.

When the turbine is disassembled, a visual and a magnetic particle examination can be made externally on accessible areas of the high-pressure rotor, low-pressure turbine blades, and

low-pressure discs. The coupling and coupling bolts are examined visually.

The presence of cracks in discs can be detected by ultrasonic means. Siemens Westinghouse has developed an ultrasonic method specifically for low-pressure shrunk-on discs that has been used successfully since the early 1980's. The procedure uses a tangential aim inspection mode for flaw detection. In this mode, the wedge-coupled transducer is positioned for shear wave inspection such that the beam makes a shallow angle (typically less than 30 degrees) with the tangent to the bore surface. This mode has proven very sensitive for detecting stress corrosion cracks originating from the bore and keyway surfaces.

A radial aim inspection mode is then used to accurately locate and size the indications found during tangential mode inspection. In this radial aim mode, the transducer is positioned to generate longitudinal waves normal to the bore surface.

These inspection procedures, when performed by experienced technicians, have been found to accurately detect sub-surface flaws to within 0.06 inch. The method has shown good repeatability over the years.

10.2.3.7 Disc Modifications

The current Byron and Braidwood low-pressure rotors are upgraded relative to original designs. Rotor test numbers TN12249, TN12266 and TN12387 are of light disc and keyplate (LDKP) construction. Keyplate modifications were added to the first three upfront discs at each end of the rotor. These discs are more susceptible to stress corrosion cracking (SCC) because they operate at higher steam temperatures. The keyplate is a separate piece, adjacent to the disc, which provides a torque path from the disc to the shaft separate from the disc bore. The keyplate is bolted to the outer diameter of the disc hub and is keyed to the shaft, leaving the bore continuous and free of stress concentration effects. The low strength lightly loaded keyplate is much less susceptible to SCC than the disc, and can tolerate the keyway stress concentration. Disc material properties for this design are summarized on Table 10.2.4.

Beginning about 1988, the remaining Byron and Braidwood low-pressure rotors were refurbished to the heavy disc and keyplate (HDKP) construction. The first three upfront discs at each end of the rotor were replaced with heavy discs of upgraded material. The reference to heavy disc implies a more robust and optimized contour in comparison to the light discs. In addition, the disc material has improved toughness and impact strength properties, as summarized on Table 10.2.4. The same keyplate modification is used on the first three discs. The last three discs are re-installed and keyed in place using conventional methods. These last discs are much less susceptible to SCC because they operate at low steam temperatures.

10.2.4 Evaluation (BWR)

This section does not apply to the Byron/Braidwood design.

10.2.5 References

1. J. A. Begley and W. A Longsdon, Westinghouse Scientific Paper 71-1E7-MSLRF-Pl, 1971.

TABLE 10.2-1

CLOSURE TIMES FOR MAIN TURBINE VALVES

VALVE	CLOSURE TIMES* (sec)
Throttle Valve - Main Valve	0.235
Throttle Valve - Pilot Valve	0.305
Governor Valve	0.260
Interceptor Valve	0.230
Reheat Stop Valve	0.230

*Closure times include signal delay and valve closing time. The values may vary slightly between similar valves and from turbine to turbine.

NOTE:

Credit for these closure times has not been taken in Chapter 15.0. These closure times are listed to provide general information about system operation.

TABLE 10.2-2

CLOSURE TIMES FOR AIR-OPERATED CHECK VALVES IN HEATER DRAIN AND EXTRACTION STEAM SYSTEMS

VALVE NUMBER	DESCRIPTION	CLOSURE TIME SPECIFIED
1/2 HD 102 A-D	First Stage Reheater Drain Tank Outlet	2 seconds
1/2 HD 59 A-D	MSR Shell Drain Tank Outlet	2 seconds
1/2 HD 101 A-D	MSR Shell Drains to MSR Shell Drain Tanks	2 seconds
1/2 HD 121 A/B	Heater 5 Drains to Separate Heater 5 Drain Cooler	3 seconds; valve closes on reverse flow or turbine trip
1/2 HD 103 A-D	Second Stage Reheater Drain Tank Outlet	3 seconds; valve closes on reverse flow assisted by air pressure
1/2 ES 15 A-C	Extraction Steam to Heater 3	1 second from flow reversal
1/2 ES 011 A-C	Extraction Steam to Heater 2	1 second from flow reversal
1/2 ES 017 A-C	Extraction Steam to Heater 4	1 second from flow reversal
1/2 ES 008	Extraction Steam to Heater 5	1 second from flow reversal
1/2 ES 002	Extraction Steam to Heater 6	1 second from flow reversal
1/2 ES 005	Extraction Steam to Heater 7	1 second from flow reversal
1/2 ES 062 A/B	High Pressure Extraction Steam to First Stage Reheaters	1 second

NOTE:

Credit for these closure times has not been taken in Chapter 15.0. These closure times are listed to provide general information about system operation.

TABLE 10.2-3

CLOSURE TIMES FOR MOTOR-OPERATED STOP VALVES IN THE EXTRACTION STEAMLINES

VALVE NUMBER	CLOSURE TIME (sec)
1ES001 (Byron)	15
1ES001 (Braidwood)	25
1ES004	15
1ES007 (Byron)	15
1ES007 (Braidwood)	25
1ES010A	15
1ES010B	15
1ES010C	15
1ES013A	15
1ES013B	15
1ES013C	15
1ES016A	15
1ES016B	15
1ES016C	15
2ES001 (Byron)	15
2ES001 (Braidwood)	25
2ES004	15
2ES007 (Bryon)	15
2ES007 (Braidwood)	25
2ES010A	15
2ES010B	15
2ES010C	15
2ES013A	15
2ES013B	15
2ES013C	15
2ES016A	15
2ES016B	15
2ES016C	15

NOTE:

Credit for these closure times has not been taken in Chapter 15.0. These closure times are listed to provide general information about system operation.

TABLE 10.2-4

REQUIRED PROPERTIES OF WESTINGHOUSE TURBINE DISCS

COMPARED WITH ASTM A-471

MATERIALS		0.2% YS (ksi)	UTS (ksi)	ELONG. %	RA %	FATT (°F)	AT ROOM TEMP. CVN ENERGY (ft-lb)
Siemens Westinghouse	TC	100	110	18	47	0	50
	TD	110	120	17	45	0	50
	TE	120	130	16	43	0	50
	FR	100	110	18	47	-105	140
	FS	110	120	17	45	-100	105
ASTM Class	3	100	110	18	47	0	45
	4	110	120	17	45	0	45
ASTM Class 5		120	130	16	43	10	40

Rotor test numbers TN12249, TN12266 and TN12387:
Typically for Siemens Westinghouse BB380 light disc and keyplate (LDKP) rotors, material type TC is used for disc 1, type TD for discs 2-3 and type TE for discs 3-6.

Rotor test numbers TN8992, TN8993, TN8997, TN10085, TN10190, TN10206, TN10207, TN10472, TN10668, TN10912 and TN11142:
Typically for Siemens Westinghouse BB380 heavy disc and keyplate (HDKP) rotors, material type FR is used for disc 1, type FS for discs 2-3 and type TE for discs 3-6.

TABLE 10.2-5

REQUIRED PROPERTIES OF WESTINGHOUSE TURBINE HP ROTORS

COMPARED WITH ASTM A-470

MATERIALS	.2% YS (ksi)	UTS (ksi)	ELONG. %	RA %	FATT (°F)	AT ROOM TEMP. CVN ENERGY (ft-lb)
Westinghouse C	100	115/130[1]	17	50	301	40
ASTM Class 7	100	120	17	50	30	40

[1]Issued 1976

10.3 MAIN STEAM SUPPLY SYSTEM

10.3.1 Design Bases

The main steam piping delivers steam from the steam generators located in the containment to the main turbine located in the turbine building. Steam conditions at the exit of the steam generators at full load are 1035 psia saturated for Unit 1 and 910 psia saturated for Unit 2, at moisture content not to exceed 0.10% for Unit 1 and 0.25% for Unit 2. The main steam piping pressure drop is approximately 30 psi (at constant enthalpy), thereby ensuring that turbine throttle conditions are met. The piping is designated as Safety Category I, Quality Group B between the steam generators and (including) the main steamline isolation valves and Safety Category II, Quality Group D from the main steam isolation valves to the main turbine stop-throttle valves.

Four Safety Category I, Quality Group B, modulating, hydraulically operated atmospheric relief valves (one on each steam generator main steamline) are provided to automatically maintain the steam pressure below approximately 1175 psig under emergency shutdown or when the plant is being maintained on hot standby and the turbine bypass steam dump valves are unavailable. Class 1E qualified solenoid actuated hydraulic operators are installed on these valves. The operators are powered from emergency power buses. The valve operators and control circuit for loops A and D are powered by Division 11 emergency power and loops B and C are powered by Division 12 emergency power. Additionally for Braidwood Unit 1, the valve operators for loops C and D have battery-backed Uninterruptible Power Supplies in the power feed. The valves have a combined design capacity of approximately 10% of the maximum main steam flow and fail closed on loss of electrical power or control signal. These valves may also be used to cool down the unit by manual operation from either the main control room or the remote shutdown panel or locally mounted hand pump actuators. These valves operate at a lower pressure point than the safety valves and reduce unnecessary operation of the safety valves under emergency shutdown or when the plant is being maintained on hot standby and the turbine bypass steam dump valves are unavailable.

Twenty Safety Category I, Quality Group B, code safety valves are provided, five on each main steamline, capable of relieving approximately 112% of the maximum main steam flow corresponding to turbine-generator guaranteed load. The setpoint of the first of the five valves on each steamline is approximately 1175 psig, with the setpoints of the four remaining valves ranging to approximately 1235 psig.

The safety valves and atmospheric relief valves are located outside the containment and before the isolation valves, within the Safety Category I valve rooms located between the steam tunnel and the containment.

Both main steam and reheat steam are supplied to the two (per unit) steam generator feed pump turbine drives. When the turbine-generator is operating at less than 60% load with a single pump in use, it is anticipated that main steam may be utilized to permit the turbines to develop maximum power in keeping with the hydraulic requirements at reduced load conditions.

Environmental design conditions for areas in which mechanical and electrical equipment will be located are 50° C and 75% relative humidity maximum. The design maximum 40-year integrated exposure including post-LOCA exposure is 1.0×10^4 rads.

10.3.2 Design Description

At design load, the four steam generators deliver 16,026,608 lb/hr of saturated steam (for Units 1) and 15,958,134 lb/hr (for Units 2) of saturated steam through four steamlines to the main turbine. These lines are crosstied near the main turbine to ensure that the pressure difference between any of the steam generators does not exceed 10 psi, thus maintaining system balance and ensuring uniform heat removal from the reactor coolant system.

Each steamline is routed from its steam generator via its Safety Category I valve room to the main steamline/feedwater tunnel by the most direct route. A flow limiter is located internally within each steam generator. The primary purpose of this flow limiter is to limit the cooldown rate of the reactor coolant system and to limit pipe thrust forces following a steamline break upstream of the main steam isolation valve. The limiter is also used for steam flow measurement.

Main steamline isolation is provided by a hydraulically operated double disc gate valve in each line just outside the containment. The main steam piping up to these valves, the valves, and the rooms enclosing the valves are Safety Category I. The main steam isolation valves automatically close on low steamline pressure signals in any one steamline, high negative steam pressure rate signals in any steamline, or on a high-high containment pressure signal and can be operated from the main control room or the remote shutdown panel.

The main steamline piping is diagramed in Drawing M-35.

Pages 10.3-3 through 10.3-5 have been deleted intentionally.

10.3.3 Design Evaluation

The Safety Category I portions of the main steam piping are designed to withstand the safe shutdown earthquake loadings.

Removable insulation sections are provided for the Safety Category I sections of piping to facilitate inservice inspection. See Section XI of the ASME Boiler and Pressure Vessel Code. Refer to Subsection 3.2.1 regarding seismic classification. Refer to Subsections 3.6.1 and 3.6.2 regarding postulated high energy line breaks outside and inside the containment.

The analysis of a main steamline break is presented in Subsection 15.1.5. Three lines branch off the main steam lines between the MSIVs and the turbine valves (refer to Drawing M-35).

A 4-inch line supplies approximately 14,000 lb/hr of steam to the gland steam system. A 4-inch motor-operated gate valve (GS001) is used for isolation. The valve is rated at 900 pounds and is designed in accordance with ANSI standards. This valve does not automatically close on a turbine trip but must be closed by the operator, if necessary.

A 28-inch line branches off each main steam header for the steam dump system and extraction to the second stage of the moisture separator reheater. The two 12-inch branch lines supply approximately 860,000 lb/hr (for Units 1) and 680,000 lb/hr (for Units 2) to the moisture separator reheater. Two 10-inch motor-operated gate valves (MS009A/B/C/D) on each moisture separator are used for isolation. The valves are rated at 900 pounds and are designed per ANSI standards. The valves must be closed by the operator. All of the valves are Category II, Quality Group D.

10.3.3.1 Effects of Main Steam Isolation Valve Closure

The dynamic load due to sudden closure of the isolation valve was taken into consideration as an impact force to design the main steam penetration anchor.

The analytical procedure used to determine this impact force was as follows:

a. The nonlinear differential equation of motion of the disc/tail-link assembly was solved by assuming that the pressure force (due to critical flow of the main steam through the valve) varies linearly with time, from the initial drag force to the final total pressure force.

b. The force acting on the valve in its closed position is taken as an impact force due to stagnation pressure acting on the disc.

In the event of a turbine generator load rejection at a rate greater than 5%/min or a 10% step change, excess steam is routed directly to the condenser via the steam dump system. Should the quantity of excess steam exceed the capacity of the steam dump system, additional relief capability is available through the hydraulically operated atmospheric relief valves and safety valves.

Sensors are provided on the steam and power conversion system for signal feedback to the reactor protection system.

These signals ensure reactor protection during abnormal turbine-generator load transients. Origination of these trip signals is described in Subsection 7.2.1.1.2.

With the exception of the functions described above, none of the steam and power conversion system is directly related to nuclear safety, nor will failure of any of its associated equipment or components reduce the effectiveness of essential equipment or components.

The auxiliary feedwater system is described in Subsection 10.4.9.

10.3.4 Inspection and Testing

Provisions for inservice inspection of the Safety Category I steamline are made. Also, weld inspections and conventional hydrotesting are performed prior to initial operation.

10.3.4.1 Shop Tests

Each main steamline isolation valve is shop-inspected to Quality Group B requirements and hydrostatically tested to prove shell and seat tightness. The main steamline isolation seat and valve stem backseats are tested for above-the-seat leakage. The seat leakage acceptance criterion is based on permissible plant design leakage and on practical valve design, and is approximately 10 cm^3/hr per inch of diameter.

The main steam isolation valves are also tested for seat leakage with pressure under the valve disc with the hydraulic cylinder holding the valve closed. This test proves the capability of the valve to contain the maximum expected pressure. Refer to Chapter 14.0 for further information regarding the initial test program.

10.3.4.2 Operational Tests

The main steam isolation valves are operationally tested during refueling outages with the hydraulic operator unit to test opening and closing functions. Provision is made for testing the valves during normal operation by partially stroking the valves. The emergency trip is actuated to close the valve utilizing the accumulator circuit. The closing time from fully open to fully closed is 5 seconds or less. This criterion is based on the

limiting accident of a steamline break outside the containment, in which it is desired to limit the cooldown rate of the reactor coolant system.

Inservice inspection of these valves is performed as required by Section XI of the ASME Boiler and Pressure Vessel Code. Removable insulation is provided to facilitate the inspection.

10.3.5 Water Chemistry

10.3.5.1 Methods of Treatment

The method of secondary system water chemistry control is all-volatile treatment (AVT). Chemical additives, injected at the condensate pump discharge, are used to maintain proper system chemistry. Ammonia, in the form of ammonium hydroxide or equivalent amine(s), is added to maintain an alkaline pH in the secondary system. Hydrazine is added to scavenge oxygen. It also contributes to the alkaline pH. Secondary system water chemistry, including plant-specific optimization, is consistent with industry practices as contained in the EPRI PWR Secondary Water Chemistry Guidelines.

Dissolved oxygen is removed by means of deaeration within the condenser. In addition, a residual hydrazine concentration of at least 15 ppb in the feedwater entering the steam generators is maintained for dissolved oxygen control.

Cation conductivity is also monitored. A molar ratio control chemical may be added to control steam generator crevice pH, if necessary.

10.3.5.2 Water Chemistry Control

Water from the secondary systems is sampled periodically to ensure that the desired limits are maintained. In order to ensure that the water chemistry specifications are met, the following monitoring operations are performed:

a. Steam generator blowdown water cation conductivity, sodium, chloride, sulfate, and pH are measured.

b. Condensate dissolved oxygen measurements are made along with periodic sodium determinations.

c. The feedwater cation conductivity, pH, hydrazine, and dissolved oxygen are measured.

10.3.5.3 Corrosion Control Effectiveness

The dual measures of pH control and exclusion of impurities have proved effective in reducing corrosion in both fossil and nuclear power plants.

Controlling system pH to achieve proper alkaline conditions reduces general corrosion and decreases the release of soluble corrosion products from metal surfaces. Ensuring the absence of free caustic eliminates the possibility of caustic stress corrosion.

Reducing dissolved oxygen to the lowest possible levels also contributes to diminished rates of general corrosion.

Excluding other impurities from the steam generator reduces scale formation on heat transfer surfaces and prevents corrosion caused by the concentration of these impurities. Addition of impurities to the steam generator is limited by the control of feedwater purity through an aggressive program of condenser maintenance to ensure its leaktight integrity. The concentration effect of the impurities in the steam generator is regulated through blowdown.

10.3.5.4 Effect of Chemistry Control on Iodine Partition

The same conditions that are established to reduce corrosion in the secondary system are also effective in reducing iodine emissions in steam. Maintaining an elevated system pH through chemical addition holds the partition factor between the steam generator liquid and potential release points to a low value. Maintaining a low iodine concentration in the steam generator through continuous blowdown further reduces the absolute value of iodine released. A main condenser iodine partition factor of 0.15 was used (Reference 1).

In the event of primary to secondary leakage, boric acid from the reactor coolant system will volatilize and carry over to the condenser. Although there is no significant depression of pH in the steam generator because of the low ionization of boric acid at elevated temperatures, boric acid would tend to depress the pH of the condensate. Under design basis leakage conditions, however, the quantity of boric acid introduced into the secondary cycle produces no significant change in partition coefficient within the steam generators and condenser with respect to radioactive iodine.

10.3.5.5 Secondary Water Chemistry Monitoring

The secondary water chemistry monitoring program is described in Reference 2 and in the appropriate station procedures.

10.3.6 Steam and Feedwater System Materials

This section describes those portions of the main steam and main feedwater systems that are designed and constructed in accordance with ASME Section III requirements for Class 2 systems and the auxiliary feedwater systems which are designed and constructed in accordance with requirements for Class 3 systems.

10.3.6.1 Fracture Toughness

The design specification states that impact testing is not required for the pressure-retaining components of the main feedwater and main steam systems per Article NC 2311 of the ASME Code, Section III.

All piping within the auxiliary feedwater systems is 6 inches in nominal diameter and smaller and is therefore explicitly exempted from impact testing per Article ND 2311 of the ASME Code, Section III.

10.3.6.2 Materials Selection and Fabrication

The following statements provide specific information on materials selection and fabrication for ASME Section III Class 2 & 3 components:

1. For Category I main steam piping, the material selection is SA 155 Grade KC65 Class 1 welded plate pipe. For Category I main feedwater and auxiliary feedwater, the material selection is seamless carbon steel, SA 106 Grade B, except for certain elbows susceptible to erosion/corrosion that are SA234, Grade WP22. These materials are listed in ASME B&PV Code Appendix I of Section III.

2. There are no austenitic stainless steel components in the Auxiliary Feedwater Systems.

3. Cleaning, painting, packaging, shipping, receiving, storage, and housekeeping are performed in accordance with the applicable guidelines of ANSI N 45.2.1, ANSI N 45.2.2, and ANSI N 45.2.3.

4. There are no low-alloy steel components within the Main Steam, Main Feedwater, and Auxiliary Feedwater Systems.

5. For carbon steel main feedwater and auxiliary feedwater piping, there are no supplementary requirements for welders. For the SA234, Grade WP22, Unit 1 steam generator main feedwater inlet elbows, the welds are performed under physical conditions

which do not restrict welder access to less than 12 to 14 inches. Therefore, no supplementary requirements for welders apply.

10.3.7 References

1. NUREG-0017, "Calculation of Releases of Radioactivity Materials in Gaseous and Liquid Effluents from Pressurized Water Reactors (PWR-GALE Code)", April 1976.

2. EPRI PWR Secondary Water Chemistry Guidelines.

10.4 OTHER FEATURES OF STEAM AND POWER CONVERSION SYSTEM

With the exception of auxiliary feedwater systems, none of the subsystems described in this section are related to plant nuclear safety. Tests, inspections, and instrumentation applications are dictated by conventional good practice for steam power plants.

10.4.1 Main Condensers

The main condenser condenses the exhaust from the main turbine and the two feedwater pump turbines. At full load, approximately 8,712,000 lb/hr of steam is condensed. (The remainder of the initial turbine throttle steam is condensed in the process of regenerative feedwater heating and main steam reheating.) There is also sufficient surface to condense the main turbine bypass steam (40% of main steam design flow at design pressure) following a 50% load rejection from maximum load. The condenser is a single-pass, multizone, deaerating type with Type 304 stainless steel tubes. A mechanical tube cleaning system is provided at Braidwood. The condenser is required to condense rated steam exhaust flow of 8,712,000 lb/hr at an average exhaust pressure of 4.0 in. Hg abs or less when supplied with circulating water under design flow rate and inlet temperature conditions. The performance characteristics of the main condensers are outlined in Table 10.4-1. The turbine exhaust casing is supplied with thermocouples to enable the operator to maintain metal temperatures below 175°F. Operation is permitted up to 250°F for short periods. High metal temperatures would normally be expected only during startup when the turbine is at 10% load or less or if there was a sudden loss of condenser vacuum or load. Special features of the condensers include the following:

a. four inlet and outlet water boxes per condenser;

b. impingement plates above the tube bundle to prevent high-velocity moisture from striking the upper rows of tubes;

c. internal tie rods between tube sheets to prevent the tubes from being stressed beyond their elastic limit and compression springs to neutralize tensile stresses in the outer rows of tubes caused by hydraulic forces acting on the tube sheets;

d. a leakage detection compartment at each of the eight tube sheets;

e. three longitudinal hotwell baffles to permit isolation and pumpout in case of contamination;

f. individual condensate outlet sumps for each of the four compartments formed by the three longitudinal hotwell baffles;

g. eight sample connections at the water seals between adjacent pressure zones;

h. two sets of level controls, one for each outboard hotwell compartment;

i. multiple makeup lines, one for each hotwell compartment; and

j. perforated distribution headers and internal baffles are incorporated to protect the condenser tubes and components from turbine bypass or high temperature drains into the condenser shell. Details of the steam dump or turbine bypass system are provided in Subsection 10.4.4.

There is a motor-operated butterfly valve in each circulating water riser pipe immediately above the basement slab; therefore, each of the four cooling sections may be isolated for inspection and maintenance while the turbine generator remains in operation. Administrative controls ensure that the motor-operated valves are closed before removing water box manways.

In the event of primary to secondary leakage, radioactive gaseous isotopes will be transported to the condenser from the steam generators. Some isotopes in soluble and particulate form will also be carried over with entrained moisture in the steam at a rate of 0.10% for Unit 1 and 0.25% for Unit 2. The gaseous isotopes will be evacuated and discharged via the off-gas system. Refer to Subsection 9.4.7.1 for control functions.

Secondary side radioactivity is detected in the steam generator blowdown by radiation monitors, which are described in Subsection 11.5.2.3.3 and Table 11.5-2. This measurement detects activity levels that would enter the condenser.

The condensate leaving the condenser is unmonitored and is not provided with a cleanup system (see Subsections 10.4.6 and 10.4.7). Weekly samples of stored condensate are taken for radiological analysis (see Table 11.5-3). Noncondensibles leaving the condenser via the steam jet air ejectors are monitored for radiation (see Subsections 10.4.2 and 11.5.2.2.13 and Table 11.5-2).

The steam generator blowdown subsystem continuously cleans up the secondary side water (see Subsection 11.2.2.1.1) by means of mixed bed demineralizers and then sends it to the condensate storage tanks. The blowdown can also be routed to radwaste for treatment (see Subsection 11.2.2.1). The subsystem is shown in Drawings M-48 and M-48A.

In the event of primary to secondary leakage at the design rate of 1 gpm concurrent with cladding defects in fuel rods,

generating 1% of rated power, the equilibrium isotopic activity level in the condenser hotwell is approximately as shown in Table 12.2-31.

A loss of condenser vacuum would result in reduced output power from the generator and increased steam exhaust temperatures. If the vacuum loss is severe enough, the turbine automatically trips which results in a reactor trip if power is greater than 30%. However, loss of vacuum does not trip the MSIV. Operation of the MSIV is described in Drawing 108D685-7.

Condenser inleakage from the circulating water system would be detected from the process samples taken periodically to verify the quality of the feedwater.

There are 16 conductivity sample points on each condenser to detect cooling water leakage into the condensate. Eight sample points are located at the tube sheet leak detection compartments and eight are located at the zone interfaces above each longitudinal hotwell compartment. If the inleakage is severe enough, the plant would have to be shut down and corrective measures taken. Reactor operation would be essentially unaffected by leakage into the condenser.

Generation of significant amounts of hydrogen in the steam side of the condenser is not expected. All noncondensible gases are removed by the steam jet air ejectors during normal operation (refer to Subsection 10.4.2).

The main condenser is not safety-related and as such is not subject to inservice inspection testing. Initial field inspections are conducted in accordance with good construction practices.

10.4.2 Main Condenser Evacuation Systems

Each condenser is equipped with four 100% two-stage steam jet air ejectors with inter and aftercondensers that will utilize condensate for liquefying entrained vapor. The steam jet air ejectors meet or exceed the minimum capacities recommended by the Heat Exchanger Institute "Standards for Steam Surface Condensers." In addition, each condenser has a high-capacity mechanical vacuum pump which is used for initial evacuation during startup. A leakage meter is provided for each steam jet air ejector skid so that the leakage rate of noncondensibles into the condenser may be determined at any time.

There are two identical steam jet air ejector skids. Each skid has two independent, two-stage air ejectors, each of which is capable of removing all the noncondensibles. Each skid has one common air inleakage meter.

Each steam jet air ejector is rated 32 cfm of dry air at 3 in. Hg abs in an air-vapor mixture.

The mechanical vacuum pump is required to evacuate the turbine, reheat piping, extraction piping, and the main condenser with the turbine glands sealed from atmospheric pressure down to 5 in. Hg abs within 3.5 hours.

There are several causes of low condenser vacuum: air inleakage, poor heat transfer, and faulty air removal. Air inleakage can and does occur anywhere in the system. If significant air inleakage is suspected, the entire vacuum boundary is checked for leaktightness until the leak is found and repaired. In the unlikely event that air inleakage exceeds the removal capacity of the ejectors, the hoggers, normally used only during startup, could be used to augment the air removal capability.

Poor heat transfer is caused by dirty tubes, air blanketing, inadequate circulating water and high inlet circulating water temperature. Air blanketing is caused by insufficient noncondensible gas removal. Normal startup procedures eliminate this problem. The circulating water system is sized to provide adequate flow.

High inlet circulating water temperature may be caused by various atmospheric conditions in conjunction with tower fill damage. Under such conditions, power would have to be reduced.

To monitor potential contamination of main steam by a steam generator tube leak, radiation monitoring of the noncondensible gases present in the steam jet air ejector exhaust header is maintained as explained in Chapter 11.0. Provisions for grab sampling the noncondensibles are made in order to confirm an alarm, should one occur.

To limit the radioiodine releases from the air ejector exhaust to levels as low as reasonably achievable in accordance with the Annex to 10 CFR 50 Appendix I (except for Braidwood), the plant design includes the use of a charcoal filter unit. The filter unit consists of a fan, demister, heater, HEPA filter, and deep-bed charcoal filter. The decontamination factor for the charcoal filter is a minimum of 10 for iodine. Refer to Subsection 9.4.7.

10.4.3 Turbine Gland Sealing System

Approximately 16,000 lb/hr of gland sealing steam is taken from the main steam supply upstream of the turbine throttle valve. This steam is normally uncontaminated. After passing through the turbine gland seals, the steam is condensed in the gland steam condenser, and the condensate is returned to the main condenser hotwell. Noncondensibles are discharged to the off-gas system by means of motor-operated blowers.

No radiation monitoring of this system is employed. The monitoring of the steam jet air ejector exhaust header provides a common indication of secondary system contamination in the event of a steam generator tube leak.

There are two 100%-capacity gland steam condensers per unit, each with a motor-driven exhaust blower.

10.4.4 Steam Dump (or Bypass) System

The turbine bypass system, including condenser dump valves and atmospheric relief valves, is shown in Drawing M-35. The size and setpoints of the relief valves are shown in this drawing. The steam dump control system is illustrated in Drawing 108D685-10 and Figure 7.7-8.

The steam dump system is provided to accommodate the inertial heat from the primary cycle. Inertial heat in the form of steam generated in excess of turbine demand is present at times of sudden load reduction. It is rejected to the condenser through the steam dump (bypass) valves. These valves open under a sudden load reduction in turbine-generator load (in excess of 10%) or by a turbine trip. The reactor control system can accommodate a 10% load reduction. The total design capacity of the dump valves is 40% of the maximum main steam flow at design pressure. The maximum step load decrease the plant is designed to accommodate without reactor trip is a step decrease of 50% of the plant rated load. Only the 40% condenser steam dump capacity is required for this transient. Atmospheric dump by way of the atmospheric steam relief valves may be actuated if the step load decrease exceeds 50% load or if there is a condenser steam dump system failure. Step load increases do not actuate the steam dump system or atmospheric relief valves.

There are twelve pneumatically operated valves per unit. Each valve is designed to pass up to 528,500 lb/hr of saturated steam at 975 psig inlet pressure. In the fully open position, the maximum flow through each valve is 890,000 lb/hr at a maximum steam inlet pressure of 1185 psig. Steam is exhausted from each bypass valve outlet to the main condenser via an alloy steel pipe which extends into the condenser above the tube bundle. Perforations in the pipe within the condenser provide for distribution of the steam. These perforations are along the horizontal centerline of the pipe on each side. There is a spray pipe above each turbine bypass pipe which cools the steam within the condenser exhaust necks during turbine bypass actuation. The spray water used is taken from the discharge of the condensate booster pumps. The piping has been designed per ANSI B31.1 and has a minimum design life of 7000 cycles. A spray water control valve is automatically opened and closed each time that its corresponding turbine bypass valve is opened and closed. The spray water control valve, however, is not modulated. The failure of the spray valve to close would have no adverse effect on system operation. The failure of the valves to open would result in increased condensate and circulating water temperatures and reduced condenser vacuum. The extent of these conditions would not be much greater than for a normal steam dump. The failure, therefore, of the spray valves will have little effect on plant operation.

An additional use of the steam dump system is for cooldown of the reactor coolant system by venting main steam to the condenser during the hot shutdown phase. This avoids the loss of steam and condensate that occurs when the power-operated main steam relief valves are used for this purpose.

Inasmuch as the steam dump valves fail in the closed position, a turbine trip coincident with failure of the steam dump system results in lifting of the main steamline relief and/or safety valves. This incident would have no deleterious effect on the reactor coolant system. Auxiliary feedwater can be utilized for steam generator cooling.

The turbine bypass system is designated Safety Category II. As such it was designed and constructed under ANSI B31.1 rules which do not require inservice inspection and testing. Initial field inspections are performed in accordance with good construction practices. Tests which were written to demonstrate system operation prior to start up were not included because the system is not safety-related and no credit is taken for use of this system in any safety analysis.

The turbine bypass system (TBS) meets the following acceptance criteria:

a. failure of the TBS to operate will not preclude operation of any essential systems; and

b. failure of the TBS high energy piping will not have adverse effects on safety-related systems or components that may be located close to the system.

The system has been evaluated for various failure modes to assure compliance with the acceptance criteria listed above.

The two potential failure modes of the steam dump system are spurious actuation of the system and failure of the system to actuate on demand. With regard to spurious actuations, the system is designed such that a single controller malfunction cannot actuate steam dump (see Subsection 15.1.3.1), and safety interlocks are provided to prevent excessive plant cooldown in the event a spurious actuation does occur (see Drawing 108D685-10). Spurious opening of steam dump valves or atmospheric relief valves is discussed in Subsection 15.1.4. Failure of the steam dump system to actuate on demand could potentially cause a reactor trip and actuation of the steam generator relief or safety valves, but should have no deleterious effect on the reactor coolant system. A worst-case failure of this type would be a failure of the system to actuate following a turbine trip or loss of external electrical load. These events are discussed in Subsections 15.2.2 and 15.2.3.

The maximum electrical load step decrease the reactor is designed to accommodate without steam bypassing is a step decrease of 10% of the plant rated load. Step load increases will not actuate steam bypassing. Reactor control rod motion is required to maintain the programmed reactor coolant temperature after any load change (see Section 7.7).

The failure of the turbine bypass high energy lines or any other high or moderate energy line has no appreciable effect on the turbine speed control system. A description of the turbine speed control system is provided in Subsection 10.2.2.4. The turbine bypass (steam dump) lines are located along J-line above elevation 426 feet 0 inch next to the condenser. The locations of the turbine speed control sensors are on elevation 451 feet 0 inch on the turbine. A line failure may affect the electrical or hydraulic portions of the overspeed trip devices. However, failure of the hydraulic portion automatically trips the turbine. The electrical overspeed device is not affected by any line break. There are no safety-related systems inside the turbine building.

10.4.5 Circulating Water System

Provided on each unit are three circulating pumps, each rated at 214,500 gpm. The main condenser of each unit requires 693,000 gpm of circulating water flow to remove cycle waste heat. This is based on a temperature rise of approximately 23.5°F through the condenser at 100% load. One cooling tower per unit is used to dissipate the waste heat to the atmosphere. The circulating water will flow through a 16-foot-diameter pipeline to each cooling tower inlet header. Following cooling in the tower, flow is directed from each tower basin through an open flume approximately 22 feet deep and 32 feet wide to a pumphouse servicing both units. Three circulating water pumps per unit pump the flow into 16-foot-diameter lines back to the main condensers. Water chemistry is controlled by continuous blowdown of supply water to the condenser and makeup to the open flume between the two towers. The circulating water pumps are of the vertical dry pit type and receive suction from the basin of the natural draft cooling tower via the open flume and pump intake bay. The system is designed to provide a normal submergence level of 6 feet to the pumps. The pump design requires a submergence of approximately 2 feet with three pumps per unit in service.

Under most circumstances, the two-unit Byron Station is capable of operating at full load with cooling tower consumptive losses supplied by a net withdrawal rate no greater than 10% of the Rock River flow. During the simultaneous occurrence of abnormally adverse weather and low river flow, however, cooling tower consumptive demand at full load may exceed 10% of the river flow. In this instance, the net withdrawal from the river will be maintained at a level acceptable to the Illinois Department of Conservation. If the consumptive demand at full load exceeds this level, the plant power level will be reduced until the river flow increases sufficiently to allow the withdrawal rate necessary for full power operation.

Emergency cooling of the plant does not depend upon the circulating water system. Instead, the essential service water system is used, as described in Subsection 9.2.1.2.

The source of water for makeup is the Rock River. Makeup water requires chemical addition to suppress organic growth in the cooling system and reduce scale-forming tendencies.

The makeup water is supplied by Safety Category II pumps located in the river screen house. These pumps, one for each natural draft tower, have a capacity of approximately 24,000 gpm at a total developed head of approximately 374 feet. A third pump is provided as a backup. The arrangement of these pumps within the building is such that the function of the essential makeup pumps is not impaired should a failure of the Safety Category II pumps occur. A drawing of the river screen house is provided in Drawing M-20. Each cooling tower will be approximately 495 feet high

and 605 feet in diameter. The towers are separated by a cold water flume approximately 500 feet in length. Structural failure of the towers will not result in interaction with any part of the plant buildings, due both to the separation between the towers and the plant and to the "windfall" nature of cooling tower failure should this unlikely event occur.

Provisions have been made for introducing a biocide into the circulating water system. Additionally, the CW makeup is treated with a low concentration of copper ions to prevent the infestation of zebra mussels.

Failure of the circulating water makeup pipe at the Byron river screen house has been evaluated for its effects on safety-related equipment. The arrangement of the river screen house is such that the function of safety-related equipment is not impaired should a failure of any Category II pump or component occur. A drawing of the river screen house is provided in Drawing M-20. The diesel-driven essential service water makeup pumps, assorted fuel oil tanks, and controls are located 15 feet 6 inches above the river screen house operating floor and are surrounded by a 4-foot wall. This provides adequate flood protection due to failure of any circulating water makeup system component.

The potential effects upon safety-related equipment of the failure of a circulating water system expansion joint have been evaluated. The maximum flow rate through a completely failed expansion joint at one of the condenser inlet or outlet nozzles would be approximately 1/4 of the total circulating water flow rates of each unit.

The Byron circulating water system has a design pressure of 60 psig and a maximum operating pressure of 56.5 psig.

The maximum transient pressure at condenser inlet expansion joints resulting from simultaneous tripping of all three circulating water pumps is 46.3 psig.

The circulating water system does not enter the plant at grade level. A complete rupture of the circulating water system would cause flooding of one-half of the turbine building up to the elevation of the steam tunnel within 30 seconds (Note, however, each condenser has four inlet and four outlet water boxes with individual nozzles and expansion joints). Collapse of the central fire wall in the turbine building and resultant flooding of the other half of the building would lead to an elapsed time of 11 minutes for water to reach the 383 foot elevation.

The turbine would have tripped on loss of condenser vacuum or high-pressure, and it is assumed the circulating water pumps would have been tripped within 10 minutes.

There is no safety Category I equipment in the turbine building below grade level. All below grade pipe penetrations into the auxiliary building are sealed (Ref. Sec. 3.4.1.3), therefore, no safety-related equipment would be disabled by the flooding. The auxiliary feedwater tunnel is watertight for the protection of safety-related cables which are routed therein. The turbine building sump alarms would notify the operator of the break and the operator could isolate the system inside the turbine building within 5 to 10 minutes.

Should the shutdown not be effected within the 10-minute period after the occurrence of the break, the postulated rupture of the circulating water piping would cause the turbine building sump alarms to annunciate after flooding. The condensate pumps and condensate booster pumps will automatically trip after a flooding condition exists. The above alarms and pump trips would provide sufficient indication of the problem and the circulating water pumps will be tripped manually.

In the event of a circulating water line break which cannot be isolated, the turbine building could theoretically be flooded to grade level. Damage to turbine building equipment will not prevent safe shutdown of the plant, because no essential equipment is located in the turbine building.

The auxiliary building is completely watertight below grade at the turbine building/auxiliary building interface, except for the main steam tunnel. Watertight closures prevent flooding of the main steam tunnel from affecting the auxiliary feedwater tunnel, the containment, or any other auxiliary building areas.

The steamlines are automatically isolated on high containment pressure or low steamline pressure signals. If the event which damages the circulating water piping also causes a significant break in a main steamline, the resulting decrease in pressure will cause MSIV closure prior to MSIV inoperability.

In the event that the turbine system remains intact following a circulating water piping failure, the turbine will be tripped and the turbine stop valves will isolate the steam system, therefore, failure of the MSIVs will not have an adverse effect. The only lines which will not be automatically isolated on the turbine trip are the takeoffs to the gland sealing steam and steam jet air ejectors. This feature however has no adverse effect as far as steaming the generators to an unacceptable level prior to closing the valves. The 4-inch gland steamline utilizes a motor-operated isolation valve which will be closed by the operator after a turbine trip. The line to the steam jet air ejectors contains a 2-inch manual isolation valve. Failure to close this

valve will result in a blowdown from the main steamline of approximately 1000 lb/hr. One train of the auxiliary feedwater system is capable of supplying feedwater flow to the steam generator to meet flow requirements of the steam jet air ejector and maintaining the plant in hot shutdown. Two trains of auxiliary feedwater are capable of supplying the steam jet air ejectors and gland sealing steam and maintaining the plant in hot shutdown in the event the motor-operated isolation valves for the gland sealing steam fail to close. There are no main steam or turbine valves associated with lines branching off the main steam header between the MSIVs and the turbine stop valves that are below grade except for the MSIVs. Valves in these lines are of a high quality as identified in Subsection 10.3.3.

In summary, one fully severed circulating water pipe would provide sufficient flow into the turbine building to flood the MSIVs in about 10 minutes. This is not realistic, because a guillotine break of this pipe would require an 8-foot lateral motion of the pipe. A large break in the circulating water system would quickly be evident to operating personnel and action would be taken to secure the main steam system. However, as discussed above, the only concern in this case is the possibility of gross failure of the main steam piping in conjunction with the circulating water pipe failure and this event results in MSIV closure prior to flooding. If the main steam system is intact, the MSIVs may fail open without impact on plant safety.

10.4.5 Circulating Water System

Provided on each unit are three circulating pumps, each rated at 247,000 gpm. The main condenser of Unit 1 requires 722,000 gpm of circulating water flow to remove cycle waste heat. This is based on a temperature rise of approximately 22.2°F through the condenser at 100% load. The main condenser of Unit 2 requires 703,000 gpm of circulating water flow to remove cycle waste heat. This is based on a temperature rise of approximately 23.1°F through the condenser at 100% load. A cooling pond is used to dissipate waste heat. The circulating water pumps are of the vertical dry pit type and receive suction from the cooling pond. The system is designed to normally provide a submergence level of 6.5 feet to the pumps. The pump design being used at this project requires a submergence of approximately 2 feet for satisfactory operation with three pumps per unit in service. It is not anticipated that the submergence level of the pumps would drop below this 2-foot submergence level.

Circulating water enters the system through a screen house located on the cooling pond in close proximity to the rest of the plant. Three circulating water pumps per unit pump the water through a 16-foot-diameter pipeline to the condensers, then through a 16-foot-diameter pipeline to the discharge outfall structure and back into the pond. The discharge outfall and intake screen house are separated by diking to ensure maximum utilization of the pond cooling surface. Water chemistry is controlled by continuous blowdown of supply water to the condenser and makeup to the cooling pond. The source of water for blowdown and makeup is the Kankakee River.

Under most circumstances, the two-unit Braidwood Station is capable of operation at full load with cooling pond consumptive losses supplied by a maximum net withdrawal of 10% of the Kankakee River flow. During the simultaneous occurrence of abnormally adverse weather conditions and low river flow, however, cooling pond consumptive demand at full load may exceed 10% of the river flow. In this instance, net withdrawal from the river will be maintained at a level acceptable to the Department of Conservation, with the remainder of the pond consumptive demand being satisfied by drawing down the level of the pond. Following a cessation of the adverse weather or a reduction in system load demand enabling a reduction in plant power level, net river withdrawal is maintained at the 10% level until normal pond level is restored.

Each condenser is equipped with a mechanical tube-cleaning system. In addition, provisions have been made for periodic introduction of a biocide and a continuous introduction of a scale inhibitor into the circulating water pump discharge piping. Provisions have also been made for periodic introduction of a biocide scavenger into the circulating water blowdown line.

Emergency cooling of the plant does not depend upon the circulating water system. Instead, the essential service water system is used, as described in Subsection 9.2.1.2. The failure of the dike surrounding the cooling lake will not cause the circulating water system to affect the function and operation of safety-related systems, such as the essential service water

system. A seismic event could cause the failure of the dikes and the draining of the cooling lake. The submerged essential cooling is a Category I structure and would remain intact with its inventory of water. Following a seismic event, the essential cooling pond will be at its minimum elevation (590 feet 0 inch) only if the retaining dikes of the main cooling pond have failed. The circulating water pumps will not operate satisfactorily with a submergence of less than 2 feet. This corresponds to a pond elevation of 590 feet 0 inch. As a result, the circulating water pumps will not operate after the postulated event. The nonessential service water pumps require 8 feet of submergence of the intake to operate properly. This corresponds to a level of 591 feet 10 inches. As a result, the nonessential service water pumps will not operate after the postulated event. Thus, the analysis in Subsection 9.2.5 of the ultimate heat sink is valid for any potential event. As discussed above, the only pump which would take suction from essential cooling pond after the level is reduced to elevation 590 feet 0 inch is the essential service water pump.

There is no significant difference between the circulating water system failure flooding analyses for Byron and Braidwood Stations. The analysis presented in Subsection 10.4.5 for Byron is applicable to both stations. The source of circulating water at Braidwood, the cooling pond, is 5 feet lower than the Byron cooling tower flume. The only effects of this difference are a slightly slower inflow rate due to reduced height at Braidwood, and a slightly lower final flood level at Braidwood. Both of these differences result in the Byron analysis being conservative for both stations.

The Braidwood circulating water system has a design pressure of 30 psig and a maximum operating pressure of 20 psig. The maximum transient pressure at condenser inlet expansion joints resulting from simultaneous tripping of all three circulating water pumps is 34.5 psig. In the event of a circulating water line break which cannot be isolated, the turbine building could theoretically be flooded to 5 feet below grade.

10.4.6 Condensate Cleanup System

10.4.6.1 Design Bases

The condensate cleanup systems at Byron and Braidwood are utilized primarily during plant startup to flush the condensate, condensate booster, and feedwater systems and when needed, as a side stream polishing system during normal operation. The equipment is designed to treat up to one-third of the condensate system flowrate supplied from the discharge header of the condensate pumps. The treated water returns to the condensate booster pumps suction header.

The condensate cleanup system is designed to produce an effluent at the design flowrate within the following limits:

a.	Sodium	< 1 ppb,
b.	Conductivity	< 0.1 µmho/cm,
c.	SO_4	< 1 ppb, and
d.	Iron	< 10 ppb.

All pressurized vessels in the system are designed and constructed in accordance with the ASME code for Unfired Pressure Vessels of ASME Division 1, Section VIII.

No part of the system is safety-related; thus, it is designated Safety Category II.

10.4.6.2 System Description

10.4.6.2.1 General Description and System Operation

The condensate cleanup system for each station consists of four mixed bed polishers each designed for a capacity of 3750 gpm. Two vessels are normally assigned to each unit; however, the valving arrangement permits operation of the vessels with either unit. Normally the flowrate from each unit is equally divided among two vessels.

The external resin regeneration system, common to all four mixed bed polishers, consists of one resin mixing and storage tank, one ultrasonic resin cleaner, one resin separation and cation regeneration tank, and one anion regeneration tank. Resin is sluiced from a mixed bed polisher to the resin separation and cation regeneration tank. The resin is processed through the ultrasonic resin cleaner into the resin and mixing storage tank. From the resin and mixing storage tank the resin is sluiced back to the resin separation and cation regeneration tank. The anion and cation resin are separated and the anion resin transferred to the anion regeneration tank. The cation resin is regenerated with sulfuric acid, and the anion resin is regenerated with sodium

hydroxide. After regeneration is complete, the resins are transferred to the resin mixing and storage tank. At Braidwood, the regeneration tank 200-gallon acid storage tank and the 700-gallon caustic tank and associated metering pumps are abandoned in place and no longer used. At Braidwood, the resin is no longer regenerated but instead replaced with resin provided by an off-site vendor.

When placed in service, the operation of this system is controlled and maintained by a solid-state controller. The control system will prevent the initiation of any automatic operation or sequence of operations that would conflict with any operation already in progress, whether such operation is under automatic or manual control. The operation status of each polisher and each regeneration vessel, including which automatic sequence is in progress, is indicated by means of lights on the polisher control panel.

Improper operation of the regeneration system and components will cause an alarm to sound and the system will be shut down. Improper regeneration solution strength will sound an alarm and the system will shut down if the situation is not corrected within five minutes.

10.4.6.2.2 Component Description

10.4.6.2.2.1 Mixed Bed Polisher

Each of the four mixed bed polishers is 114 inches in diameter with a 60-inch side seam and is sized for a flowrate of 3750 gpm. The polisher tanks are fabricated of carbon steel and lined with 3/16-inch gum rubber. All internals are Type 304 stainless steel construction. Each vessel contains approximately 180 ft^3 of cation resin, 60 ft^3 of anion resin, and 40 ft^3 of inert resin. The vessels are equipped with viewports on the side shell and an illumination port in the upper head. The mixed bed polishers are designed to Section VIII of the ASME Boiler and Pressure Vessel Code and are rated at 300 psig. A high pressure resin trap in each polisher effluent line is designed to retain particles larger than 50 mesh.

10.4.6.2.2.2 Resin Separation and Cation Regeneration Tank

The resin separation and cation regeneration tank is 84 inches in diameter with a 174-inch side shell and is equipped with seven viewports in the side shell and an illumination port in the top head for illumination. This tank is fabricated of carbon steel and is lined with 3/16-inch gum rubber. All internals are of 316 stainless steel construction. The design pressure of the tank is 100 psig. The resin is backwashed to separate the anion and cation resins. The anion resin is drawn off before the cation resin is regenerated.

A resin hopper is located above the resin separation and cation storage tank to make up for any lost resin.

10.4.6.2.2.2 Resin Separation and Cation Regeneration Tank

The resin separation and cation regeneration tank is 84 inches in diameter with a 174-inch side shell and is equipped with six viewports in the side shell and an illumination port in the top head for illumination. This tank is fabricated of carbon steel and is lined with 3/16-inch gum rubber. All internals are of 316 stainless steel construction. The design pressure of the tank is 100 psig. The resin is backwashed to separate the anion and cation resins. The anion resin is drawn off before the cation resin is regenerated.

A resin hopper is located above the resin separation and cation storage tank to make up for any lost resin.

10.4.6.2.2.3 Anion Regeneration Tank

Anion resin is transferred to this tank to be regenerated with caustic. The anion regeneration tank is 78 inches in diameter with a 120-inch side shell. The vessel is fabricated from carbon steel and is lined with 3/16-inch gum rubber. All internals are manufactured with 304 stainless steel. The tank is equipped with two view ports in the side shell and one illumination port in the top head. The design pressure is 100 psig.

10.4.6.2.2.4 Resin Mix and Storage Tank

The resin mix and storage tank is 96 inches in diameter with a 102-inch side seam and the design pressure is 100 psig. The carbon steel tank is lined with 3/16-inch gum rubber. All internals are 304 stainless steel. Three viewports are located in the side shell and one illumination port is located in the top head. The tank is sized to contain a complete change of resin for one mixed bed polisher. The anion and cation resins are sluiced from their respective regeneration tanks to this storage tank. The resins are mixed and stored until being transferred to a mixed bed polisher.

10.4.6.2.2.5 Regeneration Equipment

The acid regeneration skid consists of a 350-gallon acid storage tank at Byron, 200-gallon acid storage tank at Braidwood, two metering pumps, and a dilution station. The storage tank at Braidwood is sized for two regenerations. The caustic regeneration skid consists of a 700-gallon caustic tank, two metering pumps, and a dilution station. A hot water tank provides dilution water for regeneration of the anion resin. Both regeneration systems are equipped with the necessary instrumentation and controls to automatically provide regeneration chemicals in the required amount, temperature, and concentration to the respective regeneration tanks. All of the regeneration equipment is manufactured of material suitable for the respective chemicals. At Braidwood, the regeneration tank 200-gallon acid storage tank and the 700-gallon caustic tank and associated metering pumps are abandoned in place and no longer used. At Braidwood, the resin is no longer regenerated but instead replaced with resin provided by an off-site vendor.

10.4.6.2.2.6 Sluice Water Pumps

Two 400-gpm, 100-ft (total developed head) pumps are used to supply water from the condensate storage tank for sluicing the resin between the various tanks. The pumps also supply the required dilution water to the acid and caustic regeneration systems. The sluice water pumps are constructed of carbon steel.

10.4.6.2.2.7 Ultrasonic Resin Cleaner

The ultrasonic resin cleaner consists of three units, a URC tank, a flow adjustment panel, and an electric control console. The URC tank is 168 inches high and 36 inches by 42 inches at the base. The stainless steel tank consists of an upper resin inlet and waste outlet section, a middle section containing three

ultrasonic transducer assemblies, and a bottom section consisting of a resin discharge eductor and a resin discharge isolation valve. The flow adjustment panel contains the fluid control devices for the ultrasonic resin cleaner. All controls for operating the ultrasonic resin cleaner are mounted in the electric control console. Included are on-off switches for controlling the valves required for cleaner operation and the ultrasonic power generators which supply power to the transducer assemblies mounted on the URC tank wall. The ultrasonic resin cleaner is designed to remove insoluble particulate material lodged in the beds and attached to the surface of the resin beads at the cleaning rate of 1.5 ft^3/min of resin. Ultrasonic resin cleaning is the first step of the condensate polisher bed regeneration process.

10.4.6.2.2.8 Condensate Polisher Sump

All condensate polisher system waste water is routed to the condensate polisher sump. The effluent from this sump is normally discharged to the circulating water system after being filtered to ensure that NPDES Permit Limits are not exceeded. However, effluent from the condensate polishing system can potentially become unacceptably contaminated, and is processed through a radiation monitor. If the radiation monitor setpoint is reached, sump discharge is terminated and major condensate polisher system inputs to the sump are automatically isolated. Further discussion on liquid effluent treatment may be found in Section 11.2.

10.4.6.3 Safety Evaluation

The condensate cleanup system is a non-safety-related system and is not required for safe shutdown of the plant.

10.4.6.4 Testing and Inspection

All pressurized tanks are designed in accordance with the ASME Code for Unfired Pressure Vessels of ASME Division 1, Section VIII. All equipment is factory inspected and tested in accordance with the applicable equipment specifications and codes. Preoperational tests were performed on this system. The equipment manufacturer's recommendations and station practices are considered in determining required maintenance.

10.4.7 Condensate and Feedwater System

The purpose of the condensate and feedwater system is to provide feedwater from the condenser to the steam generators. This subsection discusses the condensate and feedwater system from the condenser to the connection with the steam generators.

10.4.7.1 Design Bases

10.4.7.1.1 Safety Design Bases

For Unit 1, the only part of the condensate and feedwater system classified as safety-related (i.e., required for safe shutdown or in the event of postulated accidents) is the main feedwater piping from the steam generator nozzles up to and including the outermost containment isolation and check valves; the feedwater tempering lines between the main feedwater piping and the outermost check and isolation valves; the interconnecting piping between the feedwater tempering or main feedwater lines and auxiliary feedwater system piping; and the chemical feed piping from the wet layup tie-in up to and including the shutoff valves. These parts of the system are designated as Safety Category I, Quality Group B.

For Unit 2, the only part of the condensate and feedwater system classified as safety-related (i.e., required for safe shutdown or in the event of postulated accidents) is the main feedwater piping from the preheater section of the steam generators up to and including the outermost containment isolation and check valves; the tempering feedwater lines between the steam generator preheater bypass connections and the outermost check and isolation valves; the interconnecting piping between the tempering lines and the auxiliary feedwater system; and the chemical feed piping from the interface into the tempering piping up to and including the shutoff valves. These parts of the system are designated as Safety Category I, Quality Group B.

10.4.7.2 System Description

The condensate and feedwater system consists of the piping, valves, pumps, heat exchangers, controls, instrumentation, and the associated equipment and subsystems that supply the steam generators with heated feedwater in a closed steam cycle using regenerative feedwater heating. The feedwater system is shown in Drawing M-36.

There are four 1/3-capacity centrifugal condensate pumps per unit with motor drives and common suction and common discharge headers and four 1/3-capacity condensate booster pumps per unit with common suction and discharge headers. Each condensate and condensate booster pump set is driven by a single motor. Three sets of pumps are normally in operation. The fourth set of pumps automatically start on low pressure at the feedwater pump suction to assure adequate flow to the feedwater pumps.

The feedwater system is of the closed type, with deaerating accomplished in the condenser. The condensate pumps take suction from the condenser hotwell and pump condensate through the air ejector condensers and the gland steam condensers to the suction of the condensate booster pumps. These pump the condensate through six stages of low-pressure feedwater heating to the feedwater pumps. The water discharge from the feedwater pumps flows through one stage of high-pressure heating into the steam generators.

Low-pressure feedwater heaters stages 1 through 4 are 1/3-sized units arranged in three strings.

Each string of these low-pressure feedwater heaters is provided with motor-operated shutoff valves. There is a single bypass sized to handle the flow of one low-pressure feedwater string. These three strings and the bypass line discharge to a common header and flow through two strings of drain coolers and low-pressure heaters 5 and 6. Each of these two strings is also

provided with motor-operated shutoff valves. There are two strings of high-pressure feedwater heaters. Each string is also provided with motor-operated isolation valves. A single bypass line, sized to handle the flow through one heater, is provided.

Feedwater line isolation is provided by a hydraulically-operated gate valve and a check valve outside the containment. Feedwater piping including these valves and up to the steam generators is Safety Class 1 and Quality Group B.

Three 1/2-capacity main feedwater pumps are provided with common suction and discharge headers. Two main feedwater pumps are turbine-driven and use steam provided by the main steam and turbine steam systems; the third main feedwater pump is motor-driven. The motor-driven pump is used as a reserve or standby pump. During unit startup and shutdown, water is normally supplied to the steam generators by the startup feedwater pump. This pump is a 5300 gpm capacity non-ESF motor-driven pump. Switchover between the startup feedwater pump and a main feedwater pump (motor-driven or turbine-driven) occurs at low power levels. A turbine-driven feedwater pump is the preferred feedwater source at low power. The variable speed feature of these pumps permits operation with a lower differential pressure across the feedwater regulating bypass valves and better control of steam generator levels.

Discharge from the pumps is automatically recirculated back to the condenser whenever flow to the high-pressure feedwater heaters falls below a predetermined point or on a reactor trip (P-4) signal. Minimum feedwater pump suction pressure protection is assured through the heater drain pump control system and automatic starting of a condensate/condensate booster pump.

Feedwater flow to each steam generator is controlled by a feedwater regulator valve in each feedwater line. The regulator valve is controlled by steam generator level, steam flow, and feedwater flow, as described in Chapter 7.0. A signal from the feedwater control system also sets the speed of the turbine-driven feedwater pumps and the position of the motor-driven feedwater pump discharge control valve so as to maintain the main feedwater regulator valves within their control range. This allows the system to accommodate all operating conditions automatically and provides control margin to accommodate load transients. During startup, a feedwater regulator bypass valve is controlled by steam generator liquid level.

Drains from the reheaters and the moisture separators are cascaded to a single heater drain tank. The heater drain tank has sufficient capacity to make up for any flow shortage occurring during the 10% load rejection situation. Emergency overflow from the heater drain tank back to the condenser and emergency makeup to the heater drain tank from the condensate booster header are provided. Drains from the four lowest-pressure feedwater heaters are cascaded back to the condenser.

Three 1/2-capacity heater drain pumps take their suction from the single common heater drain tank header and discharge into a common header. This discharge header splits up into two lines going to each feedwater heater string between the fifth-stage feedwater heater drain cooler and the fifth-stage feedwater heater.

Heater drain flow into the condensate header is normally controlled as a fixed ratio of total feedwater flow, thereby maintaining NPSH above a preset minimum. Under the 10% load rejection situation or any other transient situation, this control will automatically maintain adequate feedwater pump suction pressure. The feedwater-flow/heater-drain-flow ratio signal is biased by heater drain tank level, thereby maintaining heater drain tank level within preset limits. In addition, automatic starting of the standby condensate pump will assure adequate flow to the feedwater pumps under all operating conditions.

Main feedwater isolation valves are affected by a safety injection signal as described in Subsection 15.1.5. The isolation valves are hydraulically operated gate valves capable of closure within 5 seconds of receipt of an actuation signal. The valves are also operable from the main control room.

For Unit 1, the main feedwater isolation, feedwater tempering, and low flow feedwater bypass isolation valves are designed for the following environmental conditions; for Unit 2, the main feedwater isolation, feedwater isolation valve bypass, feedwater preheater bypass, and feedwater tempering valves are also designed for the following environmental conditions:

	Normal	Upset (4-8 hours)	Emergency (1 min.)
Temperature	65 to 123°F	149°F	350°F
Pressure	Atmospheric	Atmospheric	100 psig
Humidity	50 to 100% R.H.	100% R.H.	100% R.H.

Radiation	Gamma	Neutron
Normal	18 mR/hr	0 mR/hr
Design	25 mR/hr	0 mR/hr

For Unit 2, an additional function of the main feedwater isolation valves is to stop the flow of cold water to the preheater section of the steam generators in the event of a severe loss of load transient, and under startup and light load conditions when the steam generator preheater section is bypassed.

The Unit 2 water hammer preventive features are more fully described in the section that follows.

The water hammer prevention system is applicable to Unit 2 only. The Unit 1 steam generators use a feedring sparger, J-tube discharge, and an inlet nozzle gooseneck. This design, in combination with minimized horizontal piping at the steam generator nozzle, precludes the possibility of water hammer due to rapid condensation of a steam bubble inside the feedring.

As shown on Figure 10.1-1, the valves and the piping downstream of the FWIVs are Safety Category I, Quality Group B. The valves and their downstream sections of Category I main feedwater and tempering piping are located in the same Category I valve rooms which house the main steamline isolation valves described in Section 10.3.

10.4.7.3 Water Hammer Prevention Features (Unit 2 Only)

Several water hammer prevention features have been designed into the feedwater system. These features are provided to minimize the possibility of various water hammer phenomena in the steam generator preheater, steam generator main feedwater inlet piping, and the steam generator upper nozzle feedwater piping. The following discussion is typical for each of the four steam generators and their associated feedwater piping.

10.4.7.3.1 Startup, Low Load Conditions

a. Under startup and low load conditions when NSSS-rated flow is less than 15% and temperatures are less than 250°F, feedwater will only be admitted to the upper nozzle of the steam generator by the use of flow through the feedwater preheater bypass line via the feedwater bypass control valve. The 6-inch diameter upper nozzle is located on the upper shell of the steam generator, below the normal full power water level. Level control in the steam generator is provided by the feedwater bypass control valve at these conditions.

b. Surface mounted resistance temperature detectors (RTDs) are provided on each feedwater line close to the steam generator's upper nozzle to detect possible backleakage of steam from the steam generator into the feedwater piping during operating conditions such as startup and low-load conditions. These RTDs are monitored by the plant process computer so that actions can be taken to initiate feedwater flow to the upper nozzle before potential feedwater hammer conditions may develop.

10.4.7.3.2 Increasing Load

a. As load increases about 15% of NSSS-rated flow and feedwater temperatures rise above 250°F, forward feedwater flushing of the main feedwater piping may be initiated by opening the feedwater isolation bypass valve. A small controlled flow through the

3-inch feedwater isolation bypass line is provided to flush the main feedwater piping between the isolation valve and the steam generator.

b. Three sets of three RTDs are provided on the main feedwater piping upstream and downstream of the feedwater isolation valve and near the steam generator feedwater nozzle to detect when the feedwater flushing temperature rises above 255°F. Two out of three logic is provided for each set of three RTDs and all three must be satisfied to meet the forward flushing temperature requirements.

c. If flow in the 3-inch feedwater isolation valve bypass line (forward flushing flow) remains above a preset minimum and below a preset maximum and the flushing temperatures remain satisfied, a timed period occurs after which a permissive signal is provided to allow manual opening of the feedwater isolation valves. At any time during the FWIV opening sequence, the valve can be closed by placing its control switch in the main control room in the closed position. The alignment of open permissives occurs after a timed period which allows approximately two volumes of water to be purged from the piping between the feedwater isolation valve and the steam generator main feedwater nozzle. Feedwater flow at the main feedwater flow-element must also be above a preset minimum to enable the feedwater isolation valve to open.

d. After the feedwater isolation valve has opened, the feedwater isolation bypass valve will be manually closed.

e. Prior to opening of the feedwater isolation valve, transfer from the feedwater bypass control valve to the feedwater control valve will occur in order to provide steam generator level control at the higher feedwater flow conditions.

f. If flow to the steam generators remains continuous during a load transient and above a minimum flow rate, feedwater will not be terminated to the main feedwater nozzle even if temperature of the feedwater has dropped below 250°F. Interruption or a reduction in flow below the minimum rate, however, will cause an alarm which will require operator action for the feedwater preheater section of the steam generator to be bypassed.

g. Steam generator (two-out-of-three logic) low level trips are provided to close all of the feedwater isolation valves, feedwater isolation bypass valves and feedwater preheater bypass valves. Steam generator (two-out-of-three logic) low pressure trips are provided to close all of the feedwater isolation valves, feedwater isolation bypass valves, feedwater preheater bypass valves, and the feedwater bypass tempering valves.

10.4.7.3.3 Split Feedwater Flow

a. Prior to opening of the feedwater isolation valve, the majority of feedwater flow at the lower power level is introduced to the upper nozzle of the steam generator by the preheater bypass pipe.

b. At higher power levels after the feedwater isolation valve has opened, only a small portion of the feedwater flow bypasses the preheater, with the bypass portion contributing to approximately 10% of full feedwater flow at 100% power. This split feedwater flow arrangement provides an approximate 90% of full flow limit to the main feedwater nozzle at higher power levels in order to minimize the potential for tubing vibration in the steam generator. Feedwater flow rate to the steam generator nozzle is monitored and alarmed, if flow rises above approximately 90% to allow actions to be taken to reduce flow.

c. The preheater bypass valve remains open throughout the startup and low load conditions, as well as above 80% power to full power operation. The feedwater preheater bypass valves close on a reactor trip signal to isolate the main feedwater nozzle and the SG preheater section from the cold auxiliary feedwater flow.

10.4.7.3.4 Other Upper Nozzle Feedwater Line Uses (Braidwood Only)

Inasmuch as there is water flowing to the upper nozzle of the Unit 2 steam generator during normal operation and it is the required location for introducing cold fluid into the steam generator, auxiliary feedwater and chemical feed are connected to the upper nozzle feedwater lines rather than to the main feedwater lines. The chemical feed lines are used to add chemicals directly to the steam generators under low load conditions prior to wet layup. The chemical feed and auxiliary feedwater lines are Safety Category I, Quality Group B out to and including their isolation valves.

10.4.7.3.5 Other Upper Nozzle Feedwater Line Uses (Byron Only)

Inasmuch as there is water flowing to the upper nozzle of the Unit 2 steam generator during normal operation and it is the required location for introducing cold fluid into the steam generator, auxiliary feedwater and chemical feed are connected to the upper nozzle feedwater lines rather than to the main feedwater lines. The chemical feed lines are used to add chemicals directly to the steam generators prior to wet layup. The chemical feed and auxiliary feedwater lines are Safety Category I, Quality Group B out to and including their isolation valves.

10.4.7.4 Safety Evaluation

The condensate and feedwater systems are not safety-related, except as described in Subsection 10.4.7.1.1. If it is necessary to remove a component such as a feedwater heater, pump, or

control valve from service, continued operation of the system is possible by use of the multistream arrangement and the provisions for removing from service and bypassing equipment and sections of the system.

An abnormal operational transient analysis of the loss of a feedwater heater string is included in Subsection 15.1.1.

10.4.7.5 Tests and Inspections

All tube joints in the feedwater heaters and drain coolers are shop leak tested. Before initial operation, the completed condensate and feedwater system receive a field hydrostatic test and inspection in accordance with the applicable code.

Periodic tests and inspection of the systems are scheduled in conjunction with maintenance outages.

For Unit 2, a verification test was conducted in accordance with NUREG CR-1606 to ensure that no damaging water hammer would occur in the steam generator and/or the feedwater systems. The plant was run at approximately 25% of full power allowing feedwater to the upper feedwater nozzle at the lowest feedwater temperature in accordance with the standard plant operating procedures (SOP). Feedwater delivery was then transferred to the main feed nozzle using the SOP. The transient was observed for water hammer and the results were recorded.

Inspection and Enforcement Bulletin 87-01, "Thinning of Pipe Walls in Nuclear Power Plants", and Generic Letter 89-08, "Erosion/Corrosion-Induced Pipe Wall Thinning", addressed the issue of pipe wall thinning in single-phase and two-phase high-energy carbon steel systems. Byron and Braidwood stations have implemented a comprehensive long-term Erosion/Corrosion inspection program.

10.4.7.6 Instrumentation Application

Each steam generator is equipped with a three-element feedwater flow controller which maintains a programmed water level which is a fixed setting adjusted at the steam generator level controllers. The steam generator water level control system is described in Subsection 7.2.2.3.5.

Instrumentation and controls regulate the pump recirculation flow rate for the condensate booster pumps and feedwater pumps. Measurements of pump discharge pressure are provided for all pumps in the system. Sampling means are provided for monitoring the quality of the water in condensers, condensate pump discharge, and feedwater pump suction.

Steam-pressure measurements are provided at each feedwater heater. Instrumentation and controls are provided for regulating the heater drain flow rate to maintain the proper condensate level in each feedwater heater shell or the heater drain tank. High-level alarm and automatic dump-to-condenser action on high level are provided.

10.4.8 Steam Generator Blowdown System

The radioactive waste treatment, processing, and radiological effluent aspects of the steam generator blowdown system are described in Sections 11.2, 11.3, and 11.5, respectively.

10.4.8.1 Design Bases

The purposes of the steam generator blowdown systems are to remove impurities contained in the feedwater that become concentrated in the steam generator and to prevent or minimize the release of radioactive material to the environment in accordance with the limits of 10 CFR 20 and as low as reasonably achievable in accordance with 10 CFR 50 Appendix I.

The steam generator blowdown systems are elements of the cumulative pathways accounted for in the determination of offsite dose calculations in accordance with 10 CFR 50, Appendix I. The steam generator blowdown systems are designed to function in conjunction with the chemical feed system to control the chemical composition of the steam generator shell water within the specified limits. Steam generator blowdown is a subsystem of the liquid radwaste system that is designed to remove contaminants using a continuous blowdown flow stream from each of the four steam generators. It is designed to be monitored continuously for radiation in the secondary side of the steam generator.

The original dose analysis of the steam generator blowdown system assumed primary to secondary leakage of 500 lb/hr (1 gpm) concurrent with cladding defects in fuel rods generating 1% of rated core thermal power. This leakage was restricted to a duration equivalent to 2 weeks per year of full-power operation.

To maintain steam generator secondary side water chemistry criteria, a blowdown rate of between 15 and 90 gpm per steam generator is in effect under normal operating conditions (i.e., without excessive primary to secondary leakage or circulating water to condenser leakage).

In case of condenser tube sheet or tube leakage, the blowdown rate can be increased to the design flow rate of 180,000 lb/hr (360 gpm) total for four steam generators. However, the source of such leakage is identified, isolated, and corrected as soon as possible in order to minimize the input of impurities to the steam generators.

In case of primary to secondary leakage, the blowdown rate from nonleaking steam generators can remain in the normal operating range, while the blowdown rate from the leaking steam generator may be increased to the design rate of 90 gpm.

For Unit 1, a wet layup system is used to provide chemical treatment and to recirculate the replacement steam generator secondary side fluid. This system allows for effective chemistry monitoring and adjustment.

Each steam generator has a dedicated wet layup system that consists of piping, manual valves, one wet layup pump, differential pressure indication across the pump, and temperature indication on the pump inlet. During normal operation, manual valves and closed spectacle flanges isolate the wet layup pumps and instrumentation from the safety-related portion of the blowdown system.

During wet layup operation, chemically treated water is discharged from the wet layup pump inside the MSIV Room (up to a flow rate of approximately 80 gpm) to the steam generator recirculation nozzle. The recirculation nozzle discharges just below the primary deck with flow moving through the steam generator tubes and exiting through one of the two blowdown nozzles. The water is returned through blowdown piping, which is connected to wet layup pump suction piping inside the MSIV Room, and recirculated to the steam generator. The chemical feed system connects to the wet layup pump discharge side piping inside the MSIV Room and is used to inject chemicals only during wet layup system operation.

The blowdown piping and valves, from the steam generators to the outermost air operated isolation valve capable of automatic closure during all modes of normal reactor operation, are Safety Category I and Quality Group B. Thereafter, the piping, valves, blowdown condenser, hotwell pumps, blowdown filters, blowdown mixed-bed demineralizer, and appurtenances are Safety Category II, Quality Group D.

For Unit 1, the wet layup piping is connected to the steam generator blowdown lines in the main steam and feedwater valve rooms. The wet layup pump suction lines are Safety Category I and Quality Group B between the blowdown lines and spectacle flanges that are closed during normal operation, which provides containment isolation. The wet layup pump discharge lines are Safety Category I and Quality Group B from the steam generator recirculation nozzle through the blowdown line connection and spectacle flanges that are closed during normal operation providing containment isolation. In addition to the closed spectacle flanges, the suction and discharge lines also contain one Safety Category I and Quality Group B normally closed manual valve.

Each blowdown line from each steam generator has either three or four valves installed in the ASME Section III portion of the line. All these valves are located in the Safety Category I main steam and feedwater valve rooms immediately adjacent to the containment. The valves in each line are as follows:

a. one air-operated containment isolation valve capable of automatic closure.

b. one air-operated control valve capable of closure from the radwaste control room.

c. one or two manual shutoff valves.

The air-operated containment isolation valve will automatically close on receipt of a containment isolation Phase A signal or a low-low steam generator level signal.

10.4.8.2 System Description and Operation

The steam generator blowdown system flow diagram is shown in Drawing M-48A. The two blowdown lines from each steam generator are combined outside the containment into a single line which terminates in a separate header for each unit in the auxiliary building.

The Unit 1 and Unit 2 headers are crosstied so that one blowdown condenser may be removed from service for maintenance while the other condenser processes blowdown from both units.

Two 180,000-lb/hr (360-gpm) blowdown condensers are provided, one for each unit. Nonessential service water is used as cooling water for the blowdown condensers. The blowdown condenser is designed for maximum condensate temperature of 120°F, with the service water inlet temperature at 100°F.

Pressure control instrumentation is provided for each blowdown condenser to measure the condenser shell pressure and to throttle the blowdown header flow control valve, thereby maintaining a preset shell pressure. A high pressure switch is provided to alarm and close the blowdown header flow control valve if the high pressure setpoint is exceeded.

The hotwell level of each blowdown condenser is maintained by two variable speed pumps, each with a maximum capacity of 180 gpm. Level control instrumentation that is located on each hotwell provides input signals to the variable speed controllers of the

hotwell pumps. Normally, one pump is in operation at all times to maintain a preset hotwell level. A high level switch is provided to alarm if the hotwell level exceeds the high level setpoint. In response to the alarm the second pump can be started to reduce the hotwell level. A low level switch is also provided and will alarm and trip the pumps if the hotwell level falls below the low level setpoint.

The hotwell pumps are integrated with the radwaste disposal system described in Chapter 11.0 and are interlocked with the blowdown mixed bed demineralizers. A pressure switch on the mixed bed demineralizer header will trip the hotwell pumps if the high pressure setpoint is reached. The demineralizers are also protected from overpressurization by safety relief valves on the mixed bed header.

In the event of leakage of the primary coolant into the secondary system, the radiation monitor downstream of the steam jet air ejectors will alarm the presence of radioactive materials in the effluent within a matter of minutes.

In addition, equipment is provided for automatic periodic sampling of the water from each steam generator ahead of the isolation valve. This equipment can be used to identify the leaking steam generator and permit the adjustment of blowdown.

The activity level of the blowdown after purification is low enough to permit recycling to the condensate storage tank under design-basis leakage conditions. Provisions are also made for recycling the purified effluent to the primary water storage tanks and for its release to the environs. Under normal conditions, blowdown demineralizer effluent is returned to the main condenser hotwell.

10.4.8.3 Safety Evaluation

At the normal operation mode of 90 gpm blowdown rate for the steam generator that leaks at 1 gpm and a blowdown rate of 15 gpm for each of the three non-leaking steam generators, the weighted average non-gaseous activity level in the blowdown stream is 1/(90 + (15 * 3)) of that in the primary coolant. Since the design basis primary coolant activity, excluding tritium and gaseous nuclides, is 24.4 μCi/g (Table 11.1-13), the non-gaseous activity in the blowdown effluent is 0.18 μCi/g based on primary to secondary leak of 1 gpm concurrent with 1% failed fuel. Four mixed-bed demineralizers are provided to remove radioactive ions before the blowdown stream is returned to the main condenser hotwell or sent to the condensate storage tank.

The expected peak level of tritium in the primary coolant will be 3.5 μCi/g. This design basis contemplates tritium activity levels in the blowdown ranging from 0.01 μCi/g to 0.03 μCi/g, which will remain in the effluent from the radwaste system.

It is assumed that all gaseous activity leaking into the secondary coolant is immediately stripped from the liquid and transported with the steam through the turbines and associated systems. An analysis of gaseous releases is given in Section 11.3.

For Unit 1, the tube side of each generator contains 1,268 ft^3 or about 9,490 gallons of primary coolant. This is equivalent to approximately 35,950 liters or 25.2 x 10^6 grams at a specific gravity of 0.70. The total activity in the Unit 1 isolated primary coolant (24.4 μCi/g) will thus be 615 Ci. For Unit 2, the tube sides of each generator contain 921 ft^3 or about 6,900 gallons of primary coolant. This is equivalent to approximately 26,000 liters or 18.2 x 10^6 grams at a specific gravity of 0.70. The total activity in the Unit 2 isolated primary coolant (24.4 μCi/g) will thus be 444 Ci.

For Unit 1, at the normal operating water level, the shell side contains 2,416 ft^3 of liquid plus 2,805 ft^3 of steam. Upon condensation of the steam, there will be 2,552 ft^3 of liquid. This is equivalent to about 72,265 liters, or 72.3 x 10^6 grams at a specific gravity of 1.0. The total activity in the isolated steam generator shell is small compared to that in the tubes. For Unit 2, at the normal operating water level, the shell side contains 1880 ft^3 of liquid plus 4,070 ft^3 of steam. Upon condensation of the steam, there will be 2026 ft^3 of liquid. This is equivalent to about 57,500 liters, or 57.5 x 10^6 grams at a specific gravity of 1.0. The total activity in the Unit 2 isolated steam generator shell is small compared to that in the tubes.

If the leak is located such that the primary and secondary coolants may continue to mix after complete isolation of the vessel, the shell-side nongaseous activity may approach approximately 6.3 μCi/g for Unit 1 and 5.9 μCi/g for Unit 2. The accumulation of activated corrosion products will vary with operating time, and the additional effects of such accumulations cannot be accurately stated without a time parameter. In any event, this activity can be treated by demineralizer cleanup.

10.4.8.4 Tests and Inspections

Before the blowdown condenser is put in service, the equipment is tested to ascertain that it is performing properly. Tests, inspections, and instrumentation applications are dictated by conventional good practice for steam power plants.

10.4.9 Auxiliary Feedwater System

10.4.9.1 Design Basis

10.4.9.1.1 General

The function of the auxiliary feedwater system (AFWS) is to provide adequate cooling water to the steam generators in the event of a loss of offsite power coupled with various occurrences as discussed in Subsection 15.2.7. Either of the two auxiliary feedwater pumps supplying the four steam generators provide enough feedwater to cool the unit down safely to the temperature at

which the residual heat removal system can be utilized. The total amount of feedwater required to replace steam vented to the atmosphere, to compensate for shrinkage during cooldown, and to maintain 350°F for one-hour while residual heat removal (RHR) is placed into service is approximately 212,000 gallons for four steam generators. Unit 1 requires slightly more condensate than Unit 2 due to the increased RCS volume and metal mass of the Unit 1 steam generators. However, the total water volume of approximately 212,000 gallons is adequate to cool down to 350°F and place RHR into service for either unit.

The auxiliary feedwater system is Safety Category I and Quality Group C to the motor-operated auxiliary feedwater stop valve; the motor-operated stop valve and the downstream check valve and piping are Quality Group B. Under emergency conditions, the auxiliary feedwater system is supplied with water from the Safety Category I, Quality Group C essential service water system (refer to Drawings M-42 and M-42A). These pumps normally take suction from and have a recirculation line back to the condensate storage tanks, which are Safety Category II, Quality Group D. Switchover from the condensate storage tank to the essential service water system is automatically accomplished on low pressure in the suction line to the auxiliary feed pump.

10.4.9.1.2 Performance Basis

Various plant operating conditions and transients place demands on the auxiliary feedwater system and help define the design basis. A description of these plant conditions and the performance requirements that they impose on the design is provided in this subsection.

Following a reactor trip, decay heat is dissipated by evaporating water in the steam generators and venting the generated steam either to the condensers through the steam dump or to the atmosphere through the steam generator safety valves or the power-operated relief valves. Steam generator water inventory must be maintained at a level sufficient to ensure adequate heat transfer and continuation of the decay heat removal process. The water level is maintained under these circumstances by the auxiliary feedwater system, which delivers an emergency water supply to the steam generators. The auxiliary feedwater system must be capable of functioning for extended periods, allowing time either to restore normal feedwater flow or to proceed with an orderly cooldown of the plant to the reactor coolant temperature where the residual heat removal system can assume the burden of decay heat removal. The auxiliary feedwater system flow and the emergency water supply capacity must be sufficient to remove core decay heat, reactor coolant pump heat, and sensible heat during the

plant cooldown and while placing RHR into service. The auxiliary feedwater system can also be used to maintain the steam generator water levels above the tubes following a LOCA. In the latter function, the water head in the steam generators serves as a barrier to prevent leakage of fission products from the reactor coolant system into the secondary plant.

Design Conditions

The reactor plant conditions which impose safety-related performance requirements on the design of the auxiliary feedwater system include the following:

a. loss of main feedwater transient,

b. secondary system pipe breaks,

c. loss of all a-c power,

d. loss-of-coolant accident (LOCA), and

e. cooldown.

Loss of Main Feedwater Transients

The design loss of main feedwater transients are those caused by:

a. interruptions of the main feedwater system flow due to a malfunction in the feedwater or condensate system and

b. loss of offsite power or loss of all nonemergency a-c power with the consequential shutdown of the system pumps, auxiliaries, and controls.

Loss of main feedwater transients are characterized by a reduction in steam generator water levels, which results in a reactor trip, a turbine trip, and auxiliary feedwater actuation by the protection system logic. Following reactor trip from a high initial power level, the power quickly falls to decay heat levels. The water levels continue to decrease, progressively uncovering the steam generator tubes as decay heat is transferred and discharged in the form of steam either through the steam dump valves to the condenser or through the steam generator safety or power-operated relief valves to the atmosphere. The reactor coolant temperature increases as the residual heat in excess of that dissipated through the steam generators is absorbed. With increased temperature, the volume of reactor coolant expands and begins filling the pressurizer. Without the addition of sufficient auxiliary feedwater, further expansion will result in water being discharged through the pressurizer safety and/or relief valves. If the temperature rise and the resulting volumetric expansion of the primary coolant are permitted to continue, then (1) pressurizer safety valve capacities may be exceeded causing overpressurization of the reactor coolant system and/or (2) the continuing loss of fluid from the primary coolant system may result in bulk boiling in the reactor coolant system and eventually in core uncovering, loss of natural circulation, and core damage. If such a situation were ever to occur, the emergency

core cooling system would be ineffectual because the primary coolant system pressure exceeds the shutoff head of the safety injection pumps, the nitrogen overpressure in the accumulator tanks, and the design pressure of the residual heat removal loop. Therefore, the timely introduction of sufficient auxiliary feedwater is necessary to arrest the decrease in the steam generator water levels, to reverse the rise in reactor coolant temperature, to prevent the pressurizer from filling to a water solid condition, and eventually to establish stable hot standby conditions. Subsequently, a decision may be made to proceed with plant cooldown if the problem cannot be satisfactorily corrected.

The loss of nonemergency a-c power transient differs from a simple loss of main feedwater in that emergency power sources must be relied upon to operate vital equipment. The loss of power to the electric driven condenser circulating water pumps results in a loss of condenser vacuum and condenser dump valves. Hence, steam formed by decay heat is relieved through the steam generator safety valves or the power-operated relief valves. The calculated transient is similar for both the loss of main feedwater and the loss of nonemergency a-c power, except that reactor coolant pump heat input is not a consideration in the loss of nonemergency a-c power transient following loss of power to the reactor coolant pump bus. The loss of feedwater transient serves as the basis for the minimum flow required for the smallest capacity single auxiliary feedwater pump for the Byron/Braidwood units. The pump is sized so that it will provide sufficient flow against the steam generator safety valve set pressure (with 3% accumulation) to prevent water relief from the pressurizer. The same criterion is met for the loss of non-emergency a-c power transient.

Secondary System Pipe Breaks

The feedwater line break accident not only results in the loss of feedwater flow to the steam generators but also results in the complete blowdown of one steam generator within a short time if the break should occur downstream of the last nonreturn valve in the main or auxiliary feedwater piping to an individual steam generator. Another significant result of a feedline break may be the spilling of auxiliary feedwater to the faulted steam generator. Such situations can result in the injection of a disproportionately large fraction of the total auxiliary feedwater flow (the system preferentially pumps water to the lowest pressure region) to the faulted loop rather than to the effective steam generators, which are at relatively high pressure. The system design must allow for terminating, limiting, or minimizing that fraction of auxiliary feedwater flow which is delivered to a faulted loop or spilled through a break in order to ensure that sufficient flow will be delivered to the remaining effective steam generator(s). The concerns are similar for the main feedwater line break as those explained for the loss of main feedwater transients.

Main steamline break accident conditions are characterized initially by plant cooldown and, for breaks inside containment, by increasing containment pressure and temperature. Auxiliary feedwater is not needed during the early phase of the transient, but flow to the faulted loop will contribute to an excessive release of mass and energy to containment. Thus, steamline break conditions establish the upper limit on auxiliary feedwater flow delivered to a faulted loop. Eventually, however, the reactor coolant system will heat up again and auxiliary feedwater flow will be required to be delivered to the nonfaulted loops, but at somewhat lower rates than for the loss of feedwater transients described previously. Provisions must be made in the design of the auxiliary feedwater system to limit, control, or terminate the auxiliary feedwater flow to the faulted loop as necessary in order to prevent containment overpressurization following a steamline break inside containment and to ensure the minimum flow to the remaining unfaulted loops.

Loss of All A-C Power

The loss of all a-c power is postulated as resulting from accident conditions wherein not only onsite and offsite a-c power is lost, but also a-c emergency power is lost as an assumed common mode failure. Battery power for operation of protection circuits is assumed available. The impact on the auxiliary feedwater system is the necessity for providing both an auxiliary feedwater pump power and control source which are not dependent on a-c power and which are capable of maintaining the plant at hot shutdown until a-c power is restored.

Loss-of-Coolant Accident (LOCA)

The loss-of-coolant accidents do not impose on the auxiliary feedwater system any flow requirements in addition to those required by the other accidents. The following description of the small LOCA is provided for the sake of completeness to explain the role of the auxiliary feedwater system in this transient.

Small LOCAs are characterized by relatively slow rates of decrease in reactor coolant system pressure and liquid volume. The principal contribution from the auxiliary feedwater system following such small LOCAs is basically the same as the system's function during hot shutdown or following spurious safety injection signal, which trips the reactor. Maintaining a water level inventory in the secondary side of the steam generators provides a heat sink for removing decay heat and establishes the capacity for providing a buoyancy head for natural circulation. The auxiliary feedwater system may be utilized to assist in a system cooldown and depressurization following a small LOCA while bringing the reactor to a cold shutdown condition.

Cooldown

The cooldown function performed by the auxiliary feedwater system is a partial one since the reactor coolant system is reduced from normal zero load temperature to a hot leg temperature of approximately 350°F. The latter is the maximum temperature recommended for placing the residual heat removal system (RHRS) into service. The RHR system completes the cooldown to cold shutdown conditions.

Cooldown may be required following expected transients, following an accident such as a main feedline break, or during a normal cooldown prior to refueling or performing reactor plant maintenance. If the reactor is tripped following extended operation at rated power level, the AFWS is capable of delivering sufficient AFW to remove decay heat and reactor coolant pump (RCP) heat following reactor trip while maintaining the steam generator (SG) water level. Following transients or accidents, the recommended cooldown rate is consistent with expected needs and at the same time does not impose additional requirements on the capacities of the auxiliary feedwater pumps, considering a single failure. In any event, the process consists of being able to dissipate plant sensible heat in addition to the decay heat produced by the reactor core.

Descriptions of the analyses of the design and supporting assumptions are provided in Subsection 10.4.9.3.2.

10.4.9.2 System Description

The auxiliary feedwater system consists of two subsystems. One subsystem utilizes an electric-motor-driven pump, which is powered from one of the emergency onsite power systems supplied from a diesel generator; the other utilizes a pump that is directly powered by a diesel engine through a gear increaser. Each of the two subsystems can deliver feedwater to all four steam generators. The system has been designed to provide adequate feedwater to the unfaulted steam generators in the event of a main feedwater or steamline break coupled with a single active or passive failure in the auxiliary feedwater system, as shown in Table 10.4-4. Equipment redundancy, flow paths, safety class and quality group boundaries, major line sizes, and system operation are illustrated on the system diagram, Drawing M-37.

The auxiliary feedwater systems are not utilized for normal startup and shutdown of the units. They are, therefore, classified as moderate-energy systems.

A crosstie line off the discharge piping of the motor-driven auxiliary feedwater pumps, from one unit to the other, provides additional beyond-design-basis emergency operating flexibility and risk enhancement. The AF crosstie line between the units contains two manual isolation valves that are locked closed during normal plant operation. AF crosstie operation is not credited in any design bases event response.

10.4.9.2.1 Major Components Description

The auxiliary feedwater pumps are described as follows:

Number	Two per unit
Type	Horizontal, one electric motor driven; one direct diesel-engine driven through a gear increaser
Delivered capacity (each)	890 gpm exclusive of minimum flow
Net developed head	3350 feet
Brake horsepower	1190

10.4.9.2.1.1 Direct Diesel Engine Drive

Each direct-drive diesel engine is equipped with an essential service water booster pump for jacket water, lubrication oil, and room cooling so that loss of the essential service water pumps will not prevent the engine and room coolers from receiving their required amount of cooling water. Each engine is also equipped with a vaneaxial fan mounted on the engine skid. The fan circulates room air across a set of cooling coils, thereby removing heat given off by the engine while it is operating. Back draft dampers are installed in the duct so that another motor-driven vaneaxial fan may be used for cooling the room when a-c power has been restored and the engine-driven pump is removed from service.

The d-c power system for the diesel-driven auxiliary feedwater pump consists of two complete sets of 24-Vdc batteries, with battery chargers, battery racks, cables, and necessary accessories. The complete system is located in the room with the diesel-driven auxiliary feedwater pump. The battery chargers are powered from two separate ESF motor control centers of the same division as the diesel-driven pump. Each battery has sufficient capacity to run the diesel through four cranking cycles of 5 seconds each before the cranking timer times out and an overcrank and fail-to-start alarm is initiated. The minimum sufficient battery capacities and minimum battery/charger configurations for starting and running the diesel driven AFW pump are specified in an approved safety-related calculation.

The battery chargers are full wave rectifier voltage regulated type with voltmeter, ammeter, and thermal cutout designed for continuous floating duty on the storage batteries. Chargers are for 120-V, 60-Hz, single-phase, a-c power supply and have an isolating transformer to ensure that the batteries are completely isolated from the a-c power system. Operation of the battery chargers is automatic and includes regulation to maintain the

output voltage substantially constant within the rated current range and independent of a-c supply voltage.

There is no separate ventilating system for the d-c power system. The diesel-driven auxiliary feedwater pump room ventilation consists of a diesel-driven fan when the diesel is running and a separate motor-driven fan when the diesel is not running.

Batteries and chargers are tested during the normal plant maintenance program.

10.4.9.2.1.2 Auxiliary Feedwater Pump Suction Valves

Two motor-operated pump suction valves per pump are provided on the essential service water supply line, the backup water supply for the auxiliary feedwater pumps. A control switch with a spring return to auto feature is provided for each valve.

These valves open automatically with the actuation of at least one out of three safeguard initiation relays coincident with low pump suction pressure. They may be closed with the associated control switch provided that the associated low pump suction pressure relay is reset. The valves may be opened with the associated control switch at any time.

Limit switches on each valve interlock the operation of the following main control board lights:

A colored indicating light to show that the valve is open, and a different colored indicating light to show that the valve is closed. Both lights are energized when the valve is in the intermediate position.

10.4.9.2.1.3 Steam Generator Auxiliary Feedwater Supply Valves

Two control switches with the spring return to center feature (modulating control) are provided for each of the eight valves. One switch is mounted on the main control board and the other is mounted on the remote shutdown panel (RSP). A remote/local selector switch is also provided on the RSP.

A valve can be controlled by operating the control switch in the main control room when the selector switch is in the REMOTE position, or by operating the RSP control switch when the selector switch is in the LOCAL position. Turning the selector switch to the LOCAL position will energize a VALVE ON LOCAL CONTROL alarm on the main control board.

Limit switches on each valve interlock the operation of the following main control board lights:

a. A colored indicating light shows that the valve is open, and another colored indicating light shows that

the valve is closed. Both lights are energized when the valve is in the intermediate position.

b. A white monitor light shows that the valve is not full open.

10.4.9.2.1.4 Auxiliary Feedwater Flow Control

A flow element, indicator, and transmitter are provided in each of the eight auxiliary feedwater supply lines. Each transmitter sends a flow signal to an indicator on the main control board and to a flow switch, which energizes a high flow alarm on the main control board.

The auxiliary feedwater flow to the four steam generators is normally controlled from eight manual stations mounted on the main control board. Each manual control station electrically transmits a flow signal to an electric-to-pneumatic (E/P) converter. The pneumatic output flow signal is transmitted through a permissive three-way solenoid valve (which is normally deenergized for normal control) to the flow control valves.

The diesel-driven AFW(B) train is equipped with two flow switches per steam generator. These flow switches are powered from a battery backed power supply. One switch is set at 160 gpm to inform the operator that design flow is being delivered during loss of nonemergency a-c power. The other switch is set at a nominal 80 gpm to inform the operator of inadequate flow conditions. The lights associated with these switches are located on the main control board in the vicinity of the B Train AFW flow indicators per acceptable human factors engineering practices.

Eight selector switches (REMOTE, LOCAL) are provided at the remote shutdown panel. Turning a switch to the REMOTE position deenergizes its corresponding permissive solenoid valve and allows auxiliary feedwater control as described above. Turning a switch to the LOCAL position performs the following:

a. energizes a VALVE ON LOCAL CONTROL alarm on the main control board and

b. energizes its permissive solenoid valve and transfers the pneumatic control at the level control valves from the manual station on the main control board to the remote shutdown panel.

The valves are normally open and fail open in the event of loss of air to the valve operator.

Each train of valves is equipped with an air accumulator that provides a safety related volume of air (Braidwood Unit 1 only). Each valve is equipped with a handwheel for local control.

10.4.9.3 Safety Evaluation

10.4.9.3.1 General

The auxiliary feedwater system consists of two 100% fluid subsystems, which employ no common valving or other common components capable of spurious mechanical motion. Single failure of any one motor-operated valve will not result in the total loss of the system safety function. The system has been designed to provide adequate feedwater to the unfaulted steam generators in the event of a main feedwater or steamline break coupled with a single active or passive failure in the auxiliary feedwater system. Therefore, the power lockout of the motor-operated valves in the auxiliary feedwater system is not required.

The auxiliary feedwater pumps are started on either a low-low level in any steam generator, a safety injection signal, or a loss of power to the reactor coolant pumps. One motor-driven pump and all motor-operated valves are supplied with emergency power from the diesel generators. The other pump utilizes direct diesel-engine drive so that auxiliary feedwater can be supplied in the event that all onsite and offsite sources of a-c power are lost. All electrical equipment in each of the two subsystems is powered from separate diesels. All motor-operated valves are normally open, with the exception of the essential service water suction valves which are normally closed.

To maintain Steam Generator water inventory the SG blowdown isolation valves are automatically closed on either a low-low level in any Steam Generator or a Phase A containment isolation signal resulting from any safety injection signal. The Steam Generator blowdown sample isolation valves are automatically closed on a Phase A containment isolation signal resulting from any safety injection signal.

Flow restriction is provided by design in each line so that an auxiliary feedwater pump can deliver the minimum required flow to each of three unfaulted steam generators within approximately 1 minute following an accident without operator action. To accomplish this, the auxiliary feedwater pumps have a design capability of 990 gpm (including 100 gpm for minimum flow) at 3350 feet net developed head. For Unit 1, the auxiliary feedwater is delivered to the steam generators via main feedwater/feedring piping. For Unit 2, auxiliary feedwater is pumped to the upper nozzles of the steam generators via the tempering flow lines. In the event of a feedline rupture, operator action is required (within 20 minutes of reactor trip) to isolate auxiliary feedwater flow to the faulted steam generator as described in Subsection 15.2.8

In the event of a steamline rupture outside containment, operator action is required (within 20 minutes of reactor trip) to isolate auxiliary feedwater flow to the faulted steam generator as described in Subsection 3.11.10.

In the event of a steamline rupture inside containment, operator action is required (within 30 minutes of the initiation of the event) to isolate auxiliary feedwater flow to the faulted steam generator as described in Subsection 6.2.1.4.

In the event of a steam generator tube rupture, operator action is required (before 30 minutes) to isolate auxiliary feedwater flow to a ruptured steam generator within the time requirements described in Subsection 15.6.3.

There is a recirculation line with a locked open valve from each auxiliary feedwater pump which join to form a common line with another locked open valve that discharges to the non-safety-related condensate storage tank. The piping downstream of the first locked open valve in each train is Category II. In the event of loss of this line and/or the condensate storage tank, the system will not be prevented from performing its safety function. The recirculation line is 2 inches in diameter and flow through it is orificed to meet the pump's nominal requirement of 85 gpm. Assuming failure of both lines and the condensate storage tank result from a seismic event and that operator action to close the valve could not be taken until 30 minutes following the seismic event, only 6000 gallons of fluid would be lost if both A and B pumps were in operation. There is an adequate volume of water at all times in each Byron Category I essential service water cooling tower basin (60% minimum basin level). Essential service water makeup is available to replenish AF inventory taken from the essential service water cooling tower basins. Therefore, an adequate supply would be available for meeting auxiliary feedwater requirements.

Each direct diesel engine-driven auxiliary feedwater pump is equipped with two sets of batteries for starting and requires no supporting services to maintain flow of auxiliary feedwater to the steam generators during loss of onsite and offsite a-c power. A Category I, Quality Group C diesel fuel oil day tank in each engine room supplies fuel by gravity to its respective engine, via a Category I, Quality Group C supply line. A failure modes and effects analysis is provided in Table 10.4-4.

A seismic analysis has been performed for the 10 ton capacity carbon dioxide storage tank located in the turbine building near the air intake for the Unit 1 auxiliary feedwater diesel engine. This analysis concluded that a seismic event (safe shutdown earthquake and design basis earthquake) will not affect the structural integrity of the tank or the functional requirements of the auxiliary feedwater system.

A local alarm panel is provided for each direct diesel engine-driven pump to annunciate low lube oil pressure and high jacket water temperature. A single alarm in the main control room will annunciate when either of these conditions exists. The engine is automatically tripped in the event of overspeed, high jacket water temperature, low lube oil pressure and overcrank.

A reliability study of the auxiliary feedwater system has been performed and is described in Reference 1. The reliability of the diesel-driven auxiliary feedwater pump was specifically evaluated. Information from the data base in this report shows that the reliability of the diesel-driven pump exceeds the reliability established for diesel generators by the WASH-1400 Reactor Safety Study.

10.4.9.3.2 Performance for Limiting Transients

Analyses have been performed for the limiting transients/accidents which define the AFWS performance requirements and the ability of the design to meet these requirements. The limiting cases include the following:

a. loss of main feedwater (loss of nonemergency a-c power),

b. break of main feedwater pipe, and

c. break of a main steam pipe inside containment.

In addition to the above analyses, calculations have been performed specifically for the Byron/Braidwood units to determine the plant cooldown flow (storage capacity) requirements. The loss of all a-c power is evaluated via a comparison to the transient results of loss of nonemergency a-c power, assuming an available auxiliary pump having a diverse (non-ac) power supply.

The LOCA analysis incorporates the system flow requirements as defined by other transients, and, therefore, is not performed for the purpose of specifying AFWS flow requirements. Each of the analyses listed above are explained in the remainder of this section in further detail.

Loss of Main Feedwater

A loss of feedwater is evaluated in Subsection 15.2.7 for the purpose

of showing that for a loss of feedwater transient the peak RCS pressure remains below the criterion for Condition II transients and no fuel failures occur (refer to Table 10.4-5). Table 10.4-6 summarizes the assumptions used in this analysis. The analysis assumes that the plant is initially operating at 102% (calorimetric error) of the nominal power rating shown on the table, a very conservative assumption in defining decay heat and stored energy in the RCS. The reactor is assumed to be tripped on low-low steam generator water level, allowing for level uncertainty. Steam generator mass versus time is shown in Figure 10.4-3.

This analysis establishes the capacity of the smallest single pump and also establishes train association of the equipment so that this analysis remains valid assuming the most limiting single failure.

Break of Main Feedwater Pipe

The double-ended break of a main feedwater pipe downstream of the main feedwater line check valve is analyzed in Subsection 15.2.8. Table 10.4-6 summarizes the assumptions used in this analysis. Reactor trip is assumed to occur when the faulted steam generator is at the low-low level setpoint (adjusted for errors). This conservative assumption maximizes the stored heat prior to reactor trip and minimizes the ability of the steam generator to remove heat from the RCS following reactor trip due to a conservatively small total steam generator inventory. As in the loss of normal feedwater analysis, the initial power rating was assumed to be 102% of the nominal power rating. A total auxiliary feedwater flow of 420 gpm (Unit 1) and 453 gpm (Unit 2) is assumed to be delivered to the three non-faulted steam generators 55-seconds after reactor trip. Operator action within 20-minutes following the reactor trip is assumed to terminate auxiliary feedwater being supplied to the faulted steam generator. The criteria listed in Table 10.4-5 are met. Steam generator mass versus time is shown in Figure 10.4-4.

This analysis establishes the capacity of single pumps, establishes requirements for layout to preclude indefinite loss of auxiliary feedwater to the postulated break, and establishes train association requirements for equipment so that the AFWS can deliver the minimum flow required in approximately 1 minute assuming the worst single failure.

Break of a Main Steam Pipe Inside Containment

Because the steamline break transient is a cooldown, the AFWS is not needed to remove heat in the short term. Furthermore, addition of excessive auxiliary feedwater to the faulted steam generator will affect the peak containment pressure following a steamline break inside containment. This transient is performed at four power levels for several break sizes. Auxiliary feedwater is assumed to be initiated at the time of the break,

independent of system actuation signals. The maximum flow is used for this analysis. Table 10.4-6 summarizes the assumptions used in this analysis. At 30 minutes after the break, it is assumed that the operator has isolated the AFWS from the faulted steam generator, which subsequently blows down to ambient pressure. The criteria stated in Table 10.4-5 are met.

This transient establishes the maximum allowable auxiliary feedwater flow rate to a single faulted steam generator assuming all pumps are operating, establishes the basis for runout protection, if needed, and establishes layout requirements so that the flow requirements may be met considering the worst single failure.

Maximum and minimum flow requirements from the previously discussed transients meet the flow requirements of plant cooldown. This operation, however, defines the basis for tankage size, based on the required cooldown duration, maximum decay heat input, and maximum stored heat in the system. The auxiliary feedwater system partially cools the system to the point where the RHRS may complete the cooldown, i.e., 350°F in the RCS. Table 10.4-6 shows the assumptions used to determine the cooldown heat capacity of the auxiliary feedwater system.

The cooldown is assumed to commence at 102% of nominal rated power, and maximum trip delays and decay heat source terms are assumed when the reactor is tripped. Primary metal, primary water, secondary system metal, and secondary system water sources are all included in the stored heat to be removed by the AFWS. (See Table 10.4-7 for the items constituting the sensible heat stored in the NSSS.)

This operation is analyzed to establish minimum tank size requirements for auxiliary feedwater fluid source which are normally aligned.

Table 10.4-8 identifies the flow to the steam generators for a spectrum of accidents and transients with selected single failure.

10.4.9.3.3 Conformance with NRC Regulatory Guidance

Considerable regulatory guidance has been issued concerning the design, function, and generation of the auxiliary feedwater system. An evaluation of the auxiliary feedwater systems with respect to Section 10.4.9 of the Standard Review Plans with a separate evaluation with respect to NRC Branch Technical Position ASB 10-1 has been performed and is discussed in Attachment C to Section 10.4. An evaluation of the auxiliary feedwater system with respect to NRC Generic Requirements is presented in Attachment D to Section 10.4.

10.4.9.4 Inspection and Testing Requirements

The auxiliary feedwater pumps are tested periodically using the

recirculation line to the condensate storage tanks or the lines to the steam generators. Power-operated valves are cycled periodically to determine their operability. Visual surveillance of the system is easily conducted, since the auxiliary feedwater lines do not penetrate the primary containment.

Starting tests have been conducted at the stations with each auxiliary feedwater pump coupled to its respected driver for proof of reliable starting.

The tests and their evaluations took into account the differences between speed versus torque requirements in accelerating a gear driven centrifugal pump from standstill to rated speed versus an unloaded generator and the cranking capabilities of two batteries versus two compressed air accumulators.

10.4.9.5 Instrumentation Application

10.4.9.5.1 Auxiliary Feedwater Pumps

The control switch with spring return to center feature is provided for each pump and is mounted on the main control board. A switch (START, STOP) and a selection switch (REMOTE, LOCAL) are provided for each pump and are mounted at the remote shutdown panel.

With its selector switch in the REMOTE position, a pump will be started automatically by actuation of the safeguard relays. The operator can manually start the motor-driven auxiliary lube oil pump before starting the prime mover. A separate control switch is provided at the local panel so that under test conditions, the bearings can be prelubricated before starting. A pump suction pressure transmitter which provides source of permissive signal, will prevent manual and automatic operation of the Train A motor-driven auxiliary feedwater pump unless permissive conditions are satisfied. The circuit design for this permissive switch satisfies the single failure criterion. At Byron, the suction pressure permissive signal for the motor-driven auxiliary feedwater pumps contains circuitry to reduce the effects of high frequency process oscillations during pump start and operation.

Alarms are provided on the main control board to show pump automatic start, low pump lube oil pressure, and pump trouble in case the diesel engine driven pump trips on overspeed, low lube oil pressure, or high jacket water temperature. Both the motor-driven and engine-driven pumps are automatically stopped on low suction pressure; however, for the engine-driven pump, the local control station, located on elevation 364 feet, provides emergency start capability and allows for manual bypassing of the low-low suction pressure trip. This trip is bypassed only in conjunction with an emergency start and a fire in specific areas for 10 CFR 50, Appendix R compliance. A discussion of this

Control is provided in Reference 2. Turning a motor or engine control switch to the LOCAL position at the remote shutdown panel energizes an AF PUMP/VALVE LOCAL CONT alarm on the main control board. Each auxiliary lube oil pump is controlled from the same control switch on the main control board that operates its auxiliary feedwater pump. When starting the auxiliary feedwater pump at

the main control board, the pump starts when the lube oil pressure interlock is satisfied.

Under emergency start conditions, prelubrication is not required for either the motor-driven or direct diesel engine-driven pump to start. Automatic starting without prelubrication can be accomplished without bearing damage (due to retention of an oil film on the bearings) provided that the pumps, or their auxiliary lube oil pumps, are started at least monthly.

A pressure gauge is provided in the discharge line of each pump to provide a pressure indication locally. A pressure transmitter is provided on the discharge line of each pump and transmits the pressure reading to an indicator on the main control board. A pressure transmitter is provided on each pump suction line to interlock pump trip and to energize a low suction pressure alarm.

10.4.10 References

1. "Byron Units 1 and 2, Braidwood Units 1 and 2, Auxiliary Feedwater System Reliability Analysis", GA-C16444, Revision 1, Torrey Pines Technology, April 1982.

2. Commonwealth Edison Company, "Byron/Braidwood Stations Fire Protection Report in Response to Appendix A of BTP APCSB 9.5-1" (current amendment).

TABLE 10.4-1

CONDENSER PERFORMANCE CHARACTERISTICS

Byron Station	
Condenser Type:	Single Shell, Triple Pressure, Single Pass Double Flow
Surface Area:	1,075,000 ft^2
Tube Length:	91 feet, 8-3/4 inch
Tube Material:	ASTM A240 Type 304
Tube Size:	1 inch OD 22 BWG
Hotwell Capacity:	80,000 gallons (no retention capacity)
Free oxygen in condensate:	5 ppb
Circulating Water Flow (Units 1 & 2)	693,000 gpm
Full Load Steam Generation:	17.278 X 10^6 lb/hr
Steam Loading:	
Unit 1	7978 X 10^6 BTU/hr
Unit 2	8084 X 10^6 BTU/hr

	LP ZONE	IP ZONE	HP ZONE
Unit 1			
Absolute Pressure, in. Hg.	3.25	3.89	4.69
Outlet Water Temperature	106	114	121
Heat Transfer Rate Btu/hr-ft^2-°F	467.66	482.39	498.24
Effective Length, ft	31.40	28.67	31.67
Inlet Water Temperature	98	106	114
Unit 2			
Absolute Pressure, in. Hg.	3.28	3.92	4.73
Inlet Water Temperature	98	106	114
Outlet Water Temperature	106	114	122
Heat Transfer Rate Btu/hr-ft^2-°F	471.54	494.41	513.02
Effective Length, ft	31.40	28.67	31.67

TABLE 10.4-1

CONDENSER PERFORMANCE CHARACTERISTICS

Braidwood Station	
Condenser Type:	Single Shell, Triple Pressure, Single Pass Double Flow
Surface Area:	1,075,000 ft^2
Tube Length:	91 feet, 8-3/4 inch
Tube Material:	ASTM A240 Type 304
Tube Size:	1 inch OD 22 BWG
Hotwell Capacity:	80,000 gallons (no retention capacity)
Free Oxygen in condensate:	5 ppb
Circulating Water Flow	
Unit 1:	722,000 gpm
Unit 2:	703,000 gpm
Full Load Steam Generation:	17.278 x 10^6 lb/hr
Steam Loading:	
Unit 1	7978 X 10^6 Btu/hr
Unit 2	8084 X 10^6 Btu/hr

	LP ZONE	IP ZONE	HP ZONE
Unit 1			
Absolute Pressure, in. Hg.	3.30	3.91	4.67
Inlet Water Temperature	98	106	113
Outlet Water Temperature	106	113	120
Heat Transfer Rate Btu/hr-ft^2-°F	458.68	476.39	487.24
Effective Length, ft	31.40	28.67	31.67
Unit 2			
Absolute Pressure, in. Hg.	3.33	3.98	4.78
Inlet Water Temperature	98	106	114
Outer Water Temperature	106	114	121
Heat Transfer Rate Btu/hr-ft^2-°F	461.68	483.70	495.87
Effective Length, ft	31.40	28.67	31.67

TABLE 10.4-2

This page has been intentionally deleted.

TABLE 10.4-2

This page has been intentionally deleted.

TABLE 10.4-3

This page has been intentionally deleted.

TABLE 10.4-4

AUXILIARY FEEDWATER SYSTEM

FAILURE MODES-EFFECTS ANALYSIS

(Initiating accident: break of main feedwater line close to steam generator)

COMPONENT	FAILURE MODE	EFFECT
Auxiliary feedwater pump	Failure to Start	Two pumps provided and safety-related function is maintained.
Auxiliary feedwater control valve on line leading to isolated steam generator	Fails open	One motor operated isolation valve provided in series with the control valve, which is used to stop flow.
Auxiliary feedwater control valve	Failure to open	Redundant flow path is available from other auxiliary feedwater pump, and safety related function is maintained.
Auxiliary feedwater stop valve	Fails open	One control valve provided in series with the stop valve. Also the stop valve may be operated by means of a hand wheel.
Auxiliary feedwater stop valve	Failure to open	Redundant flow path from other auxiliary feedwater pump. Also the stop valve may be operated by means of a hand wheel.
Auxiliary feedwater line anywhere on discharge side of pumps except for common line	Line breaks	Each auxiliary feedwater pump supplies each steam generator through completely redundant piping.

TABLE 10.4-4 (Cont'd)

COMPONENT	FAILURE MODE	EFFECT
Common auxiliary feedwater connection line to steam generator	Line breaks	Isolate steam generator from auxiliary feedwater supply as for initiating accident. Flow limiting orifices prevent pump runout from affecting other steam generators.
Suction supply from essential service water systems to each auxiliary feedwater pump	Line breaks	Separate suction is supplied to each pump from essential service water loop in each unit.
Power supply to auxiliary feedwater pump motor	Loss of power to an ESF bus	A direct diesel-engine drive is provided for the pump in the other subsystem, which will automatically start on receipt of either low-level signal from one steam generator, a safety injection signal, or loss of off-site power.
Main feedwater isolation gate valve (Unit 1 only)	Fails open	Main feedwater isolation check valve closes, preventing reverse flow and ensuring auxiliary feedwater injection to the steam generator.

TABLE 10.4-4 (Cont'd)

COMPONENT	FAILURE MODE	EFFECT
S/G Low Flow FW Isolation Valves (1FW039A-D), S/G FW Preheater Bypass Isolation Valves (2FW039A-D)	Fails to close	Failure of a 1/2FW039A-D valve to close could result in an increased AF purge volume in a single intact loop. If this were to occur, the AF system would have to purge warm main FW from the bypass FW line into the SG. However, if the single active failure were a failed open 1/2FW039A-D valve (in an intact loop), then an additional AF pump could be credited in the analysis. The additional AF flow would more than offset the change in purge volume. For unit 2 only – a failed open 2FW039 valve on a faulted loop could result in prolonged blowdown from a FW line break until a SI signal closes the FW009 valves. Failure of a 2FW039 valve is much less limiting than the failure of an AF pump.

TABLE 10.4-5

CRITERIA FOR AUXILIARY FEEDWATER SYSTEM DESIGN BASIS CONDITIONS

CONDITION OR TRANSIENT	ANSI N18.2 CLASSIFICATION	CRITERIA	ADDITIONAL DESIGN CRITERIA
Loss of Main Feedwater	Condition II	Peak RCS pressure not to exceed design pressure ± 10%. No consequential fuel failures	Pressurizer does not fill, 1 single motor driven auxiliary feedwater pump feeding 4 SGs.
loss of nonemergency a-c power	Condition II	(Same as LMFW)	Pressurizer does not fill, 1 single motor driven auxiliary feed pump feeding 4 SGs.
Feedline Break	Condition IV	10 CFR 100 dose limits. Containment design pressure not exceeded	Core does not uncover
Loss of all A/C Power	N/A	Note 1	Same as loss of non-emergency a-c power
Steamline Break	Condition IV	Containment design pressure not exceeded 10 CFR 50.67 dose limits	
Loss-of-Coolant	Condition III	10 CFR 50.67 dose limits 10 CFR 50 PCT limits	
	Condition IV	10 CFR 50.67 dose limits 10 CFR 50 PCT limits	
Cooldown	N/A		100°F/hr 557°F to 350°F

Note 1 Although this transient establishes the basis for AFW pump powered by a diverse power source, this is not evaluated to typical criteria since multiple failures must be assumed to postulate this transient.

TABLE 10.4-6

SUMMARY OF ASSUMPTIONS USED IN AFWS DESIGN VERIFICATION ANALYSES

TRANSIENT	Loss of Feedwater*	COOLDOWN**	MAIN FEEDLINE BREAK*	MAIN STEAMLINE BREAK (CONTAINMENT)
a. Maximum NSSS power	102% of nominal - 3600.6 MWt	102% of nominal - 3586.6 MWt	102% of nominal - 3600.6 MWt	0, 30, 70, 102% of nominal 3425 MWt****
b. Time delay from event to rod motion	49.2 seconds	2 seconds	34 seconds	Variable
c. AFWS actuation signal/time delay for AFWS flow	low-low SG level/ 55 seconds	N/A	low-low SG level/ 55 seconds	Assumed immediately/ 0 seconds
d. SG water mass at time of low-low SG level	46,022.9 lbm (28.6% NRS)	70,500 lbm (10% NRS)	42,282 lbm (18.6% NRS)	N/A
e. Initial SG inventory	88,490.0 lbm	70,500 lbm	89,970 lbm(faulted) 74,693	Consistent with power level
f. Rate of change of SG mass before and after AFWS actuation	See Figure 10.4-3	N/A	See Figure 10.4-4	N/A
g. Decay heat	ANSI 1979	Westing-house model***	ANSI 1979	ANSI 1979
h. AFW pump design pressure	1273.5 psia	1310.1 psia	1276 psia	N/A

TABLE 10.4-6 (Cont'd)

TRANSIENT	Loss of Feedwater*	COOLDOWN**	MAIN FEEDLINE BREAK*	MAIN STEAMLINE BREAK (CONTAINMENT)
i. Minimum number of SGs which must receive AFW flow	4 of 4	N/A	3 of 4	N/A
j. RC pump status	All operating	Tripped	All operating	Variable (both power and LOOP cases bounded)
k. Maximum AFW temperature	120°F	120°F	120°F	120°F
l. Operator action	None assumed	N/A	20 minutes after Reactor trip	30 minutes
m. MFW purge volume per SG/MFW temperature	60 ft^3/ 448.4 °F	160 ft^3/ 446.6 °F	60 ft^3/ 448.4 °F	701.7 ft^3 (Unit 1 - FIV failure), 654.9 ft^3 (Unit 2 – FIV failure)
n. Normal blowdown	None assumed	None assumed	None assumed	None assumed
o. Sensible heat	See cooldown	Table 10.4-7	See cooldown	N/A
p. Time delay at hot standby/ Time to cooldown	2 hr/4 hr	2 hr/4 hr	2 hr/4 hr	N/A
q. AFW flow rate	560 gpm	variable	420 gpm (Unit 1) 453 gpm (Unit 2)	938 gpm to faulted SG

* These cases are limited by Unit 2. The information presented here is for Unit 2 only.
** This case is limited by Unit 1. The information presented here is for Unit 1 only
***This model is more conservative than the ANSI 1979 standard.

TABLE 10.4-6 (Cont'd)

**** The nominal full load power assumed in most of the analysis cases is 3425 MWt NSSS power. However, an evaluation was also performed to address an uprated NSSS power of 3600.6 MWt. The evaluation generally showed that the containment response from a steamline break initiated from the uprated power is bounded by the lower nominal power conditions. This is because there is a lower initial steam generator pressure at higher power levels, which lowers the mass and energy release rates.

TABLE 10.4-7

SUMMARY OF SENSIBLE HEAT SOURCES

Primary Water Sources (initially at nominal power temperature and inventory)

RCS fluid
Pressurizer fluid (liquid and vapor)

Primary Metal Sources (initially at nominal power temperature)

Reactor coolant piping, pumps and reactor vessel
Pressurizer
Steam generator tube metal and tube sheet
Steam generator metal below tube sheet
Reactor vessel internals

Secondary Water Sources (initially at nominal power temperature and inventory)

Steam generator fluid (liquid and vapor)
Main feedwater purge fluid between steam generator and AFWS piping

Secondary Metal Source (initially at nominal power temperature)

All steam generator metals above tube sheet, excluding tubes.

TABLE 10.4-8

AUXILIARY FEEDWATER FLOW TO STEAM GENERATORS FOLLOWING AN ACCIDENT/TRANSIENT WITH SELECTED SINGLE FAILURE - GPM

ACCIDENT/TRANSIENT PUMP FAILURE	DIESEL FAILURE	MD PUMP FAILURE
1. Loss of Main FW/SBLOCA	140 gpm	140 gpm
2. Feedline Break[1]	151	151
3. Loss of Nonemergency a-c Power	140	140
4. Cooldown	-	-
5. Main Steamline Break (max)		
Intact Loops	140	140
Faulted Loop (Maximum flow)	469	469

[1] The flows given are for the Unit 2 analysis, which bounds the Unit 1 analysis. Refer to Subsection 15.2.8.

Attachments 10.A and 10.B have been deleted intentionally.

ATTACHMENT 10.C

AN EVALUATION OF THE AUXILIARY FEEDWATER SYSTEM SECTION 10.4.9 OF THE STANDARD REVIEW PLANS AND BRANCH TECHNICAL POSITION ASB 10-1

TABLE OF CONTENTS

SECTION	SUBJECT
10.C.1	Evaluation to the Standard Review Plan Section 10.4.9
10.C.2	Evaluation to the Branch Technical Position ASB 10-1

10.C.1 An Evaluation of the Auxiliary Feedwater System to Section 10.4.9 of the Standard Review Plans (for ESF Pump Trains Only)

The evaluation of the auxiliary feedwater system to the guidance of Section 10.4.9 of the Standard Review Plans is provided in the subsections that follow. Each subsection identifies a separate recommendation and provides a response that shows compliance with that recommendation.

10.C.1.1 Recommendation

System components and piping have sufficient physical separation or shielding to protect the essential portions of the system from the effects of internally and externally generated missiles.

Response

Byron/Braidwood system components and piping satisfy physical separation and shielding requirements relating to internally and externally generated missiles.

See Subsections:

3.5.1.1	Internally Generated Missiles (Outside Containment),
3.5.1.4	Missiles Generated by Natural Phenomena,
3.5.1.5	Missiles Generated by Events Near the Site,
3.5.1.6	Aircraft Hazards,
3.5.2	Systems to be Protected, and
3.5.3	Barrier Design Procedure.

10.C.1.2 Recommendation

The system satisfies the recommendations of Branch Technical Position ASB 3-1 with respect to the effects of pipe whip and jet impingement that may result from high or moderate energy piping breaks or cracks (in this regard the AFS is considered to be a high energy system).

Response

The auxiliary feedwater system is not used for normal startup and shutdown at Byron and Braidwood and is, therefore, considered to be a moderate energy system and satisfies BTP ASB 3-1. See Section 3.6 and Subsection 10.4.9.2.

10.C.1.3 Recommendation

The system and components satisfy design code requirements as appropriate for the assigned quality group and seismic classifications.

Response

Byron/Braidwood Station system and components satisfy design code requirements for assigned quality group and seismic classifications.

See Subsections:

10.4.9.1	AFW System Design Basis and
10.4.9.2	AFW System Description.

10.C.1.4 Recommendation

The failure of nonessential equipment or components does not affect essential functions of the system.

Response

Nonessential systems interfacing with the auxiliary feedwater system are:

1. The condensate storage tank: Failure of the condensate storage tank or suction lines is accommodated by essential service water backup supply to each auxiliary feedwater pump suction.

2. Station air system: Failure of the air system is accommodated by failing air operated flow control valves open on loss of air. Therefore, failure of nonessential equipment does not affect the essential functions of the auxiliary feedwater system.

10.C.1.5 Recommendation

The system is capable of withstanding a single active failure.

Response

The auxiliary feedwater system is capable of withstanding a single active failure.

See Subsections:

7.2.2.2.3b	Single Failure Criteria (Electrical),
10.4.9.2	AFW System Description (Mechanical), and
Table 10.4-4	Failure Modes and Effects Analysis.

10.C.1.6 Recommendation

The system possesses diversity in motive power sources such that system performance requirements may be met with either of the assigned power sources, e.g., a system with an a-c subsystem and a redundant steam/d-c subsystem.

Response

The auxiliary feedwater system possesses diversity in motive power sources and the capability for feeding two or more unfaulted steam generators at the required rate concurrent with a single active failure. In the event of loss of both onsite and offsite a-c power, the diesel-engine driven pump will deliver feedwater to the steam generators.

See Subsections:

10.4.9.1	AFW System Design Basis,
10.4.9.2	AFW System Description, and
7.3.1.1.6	AFW System Operation.

10.C.1.7 Recommendation

The system precludes the occurrence of fluid flow instabilities, e.g., water hammer, in system inlet piping during normal plant operation or during upset or accident conditions (see SRP Section 10.4.7).

Response

Byron/Braidwood auxiliary feedwater system includes water hammer prevention capabilities.

See Subsections:

10.4.7.3	Water Hammer Prevention Features and
10.4.9.3.1	Auxiliary Feedwater System General Safety Evaluation.

10.C.1.8 Recommendation

Functional capability is assured by suitable protection during abnormally high water levels (adequate flood protection considering the probable maximum flood).

Response

The functional capabilities of systems are assured as stated in Section 3.4.

10.C.1.9 Recommendation

The capability exists to detect, collect, and control system leakage and to isolate portions of the system in case of excessive leakage or component malfunctions.

Response

Pump seal leakage is directed to the auxiliary building equipment drain system. Visual periodic inspections will provide indication of system leakage. The piping and valving in the auxiliary feedwater system is sufficiently diverse to allow component isolation for malfunction and repair while still maintaining the essential functions of the auxiliary feedwater system.

10.C.1.10 Recommendation

Provisions are made for operational testing.

Response

Provisions are made for operational testing of Byron/Braidwood Stations auxiliary feedwater as outlined in Subsection 10.4.9.4.

10.C.1.11 Recommendation

Instrumentation and control features are provided to verify the system is operating in a correct mode.

Response

Technical Specifications require verification by flow demonstration or valve position verification for proper operating alignment. Instrumentation is available to verify system alignment by either means from the control room. See Subsection 10.4.9.5.

10.C.1.12 Recommendation

The system is capable of automatically initiating auxiliary feedwater flow upon receipt of a system actuation signal.

Response

The auxiliary feedwater system is capable of automatic initiation.

See Subsections;

10.4.9.3.1	AFW System General Safety Evaluation,
7.3	Engineered Safety Features Actuation System,
7.2.1.1.2.e	Low-low Steam Generator Water Level Trip.

10.C.1.13 Recommendation

The system satisfies the recommendations of Regulatory Guide 1.62 with respect to the system capability to manually initiate protective action by the auxiliary feedwater system.

Response

The commitment to comply with the intent of Regulatory Guide 1.62 is found in Appendix A, page A-1.62-1.

10.C.1.14 Recommendation

The system design possesses the capability to automatically terminate auxiliary feedwater flow to a depressurized steam generator and to automatically provide feedwater to the intact steam generator.

Response

The flow orifices in the auxiliary feedwater lines automatically limit flow to a depressurized steam generator and ensure flow to unaffected steam generators. See Subsection 10.4.9.3.1.

10.C.1.15 Recommendation

The system possesses sufficient auxiliary feedwater flow capacity so that a cold shutdown can be achieved.

Response

Subsection 10.4.9.1 states a minimum of approximately 212,000 gallons is necessary to cool down to residual heat removal system initiation. Technical Specification 3.7.6 states the limiting condition for operation for the condensate storage tank. This limit is based on a sufficient volume of water in the condensate storage tank to meet the design basis requirements for cooldown, and includes the time needed for completion of placing residual heat removal (RHR) into service. In addition, sufficient water volume is available from the essential service water system to achieve cold shutdown.

10.C.1.16 Recommendation

The Applicant's proposed technical specifications are such as to assure the continued reliability of the AFW during plant operation, i.e., the limiting conditions for operation and the surveillance testing requirements are specified and are consistent with those for other similar plants.

Response

Byron/Braidwood Technical Specifications have been developed from the Standard Specifications for Westinghouse plants.

10.C.2 An Evaluation of the Auxiliary Feedwater System to Branch Technical Position ASB 10-1 (for ESF Pump Trains Only)

The evaluation of the auxiliary feedwater system to the guidance of Branch Technical Position ASB 10-1 is provided in the subsections that follows. Each subsection identifies a separate recommendation and provides a response that shows compliance with the recommendation.

10.C.2.1 Recommendation

The auxiliary feedwater system should consist of at least two full-capacity, independent systems that include diverse power sources.

Response

Byron/Braidwood auxiliary feedwater system consists of one 100% capacity emergency a-c powered motor-driven pump and one 100% capacity diesel driven pump (capable of supplying water independent of a-c power availability).

See Subsections:

10.4.9.1	AFW System Design Basis,
10.4.9.2	AFW System Description, and
10.4.9.3	AFW System Safety Evaluation.

10.C.2.2 Recommendation

Other powered components of the auxiliary feedwater system should also use the concept of separate and multiple sources of motive energy. An example of the required diversity would be two separate auxiliary feedwater trains, each capable of removing the afterheat load of the reactor system, having one separate train powered from either of two a-c sources and the other train wholly powered by steam and d-c electric power.

Response

Motor-operated valves in each auxiliary feedwater train employ diversity in power supplies. All motor- and air-operated valves employ the same diversity of supplies. This diversity is discussed in Subsection 10.4.9.3 In addition, Chapter 8.0 specifically addresses electrical power from all aspects applicable to train separation and diversity of power. All motor-operated and air-operated

valves are normally open, with the exception of essential service water suction and recirculation valves which are normally closed.

10.C.2.3 Recommendation

The piping arrangement, both intake and discharge, for each train should be designed to permit the pumps to supply feedwater to any combination of steam generators. This arrangement should take into account pipe failure, active component failure, power supply failure, or control system failure that could prevent system function. One arrangement that would be acceptable is crossover piping containing valves that can be operated by remote manual control from the control room, using the power diversity principle for the valve operators and actuation systems.

Response

A common header in the suction to the AFW pumps exists where the supply lines from the condensate storage tank combine. The line then splits to supply suction to the individual AFW pumps. A common header exists where the auxiliary feedwater enters the steam generator. This is downstream of the flow control valves on the discharge of the pumps (see Drawing M-37). Any of the AFW pumps can be aligned to supply any of the steam generators by operating motor-operated valves from the control room.

10.C.2.4 Recommendation

The auxiliary feedwater system should be designed with suitable redundancy to offset the consequences of any single active component failure; however, each train need not contain redundant active components.

Response

See response to Item 10.C.1.5.

10.C.2.5 Recommendation

When considering a high energy line break, the system should be so arranged as to assure the capability to supply necessary emergency feedwater to the steam generators, despite the postulated break of any high energy section of the system, assuming a concurrent single active failure.

Response

See response to Item 10.C.1.2 of the previous section.

ATTACHMENT 10.D

AN EVALUATION OF THE AUXILIARY FEEDWATER SYSTEM TO THE NRC GENERIC SHORT-TERM AND LONG-TERM REQUIREMENTS

TABLE OF CONTENTS

SECTION	SUBJECT
10.D.1	Response to NRC Staff Short-Term Recommendations
10.D.2	Response to Additional NRC Staff Short-Term Recommendations
10.D.3	Response to NRC Staff Long-Term Recommendations

10.D.1 An Evaluation of The Auxiliary Feedwater System to the NRC Generic Short-Term Recommendations (for ESF Pump Trains Only)

The evaluation of the auxiliary feedwater system to the NRC Generic Short-Term Recommendations is provided in the subsections that follow. Each subsection identifies a separate short-term recommendation and provides a response that shows compliance.

10.D.1.1 NRC Recommendation GS-1

The licensee should propose modifications to the Technical Specifications to limit the time that one AFW system pump and its associated flow train and essential instrumentation can be inoperable. The outage time limit and subsequent action time should be as required in current Standard Technical Specifications; i.e., 72 hours and 12 hours, respectively.

Response

Technical Specification 3.7.5 requires two pumps to be operable, even though one pump train may be inoperable up to 72 hours before action is required to place the unit in hot shutdown.

10.D.1.2 NRC Recommendation GS-2

The licensee should lock open single valves or multiple valves in series in the AFW system pump suction piping and lock open other single valves or multiple valves in series that could interrupt all AFW flow. Monthly inspections should be performed to verify that these valves are locked and in the open position. These inspections should be proposed for incorporation into the surveillance requirements of the plant Technical Specifications. See Recommendation GL-2 for the longer term resolution of this concern.

Response

The AFW pumps are supplied from the CST's via either of two separate lines, both of which are normally aligned to supply the AFW system. Byron's Unit 1 and Braidwood's Unit 1 and 2 have the following piping arrangement: One line has two manual, locked open valves in series, and the other line has a single manual locked open valve. The

lines combine downstream of these valves in a common line which separates to supply the two AFW pumps in the Auxiliary Bldg. Byron's Unit 2 has the same configuration with the exception that the 'common' line has a manual, locked open valve and a check valve installed.

The supply lines, after they separate from the common line, for Byron's Unit 1 and 2, and Braidwood's Unit 2, 'B' Train, continue on the Aux Feedwater pump via one check valve and one manual locked open valve in series. Braidwood's Unit 1, and Unit 2 'A' train differ in that they contain one manual locked open valve, a check valve and then another manual locked open valve in series.

Technical Specification 3.7.5 requires monthly surveillances to verify that those valves in the flowpath which are capable of being mispositioned are in the correct position.

10.D.1.3 NRC Recommendation GS-3

The licensee has stated that the AFW system flow is throttled to avoid water hammer. The licensee should reexamine the practice of throttling AFW system flow to avoid water hammer.

The licensee should verify that the AFW system will supply on demand sufficient initial flow to the necessary steam generators to assure adequate decay heat removal following a loss of main feedwater flow and a reactor trip from 100% power. In cases where this reevaluation results in an increase in initial AFW system flow, the licensee should provide sufficient information to demonstrate that the required initial AFW system flow will not result in plant damage due to water hammer.

Response

It is not necessary to throttle the AFW flow to avoid water hammer in the feedwater lines. For Unit 1, AFW is introduced via the main feedwater line, which uses a feedring/J-tube design. This design of the feedring system precludes the conditions that initiate water hammer events. For Unit 2, the AFW flow is directed to an upper nozzle in the steam generator. This line is separate from the main feedwater nozzle. The line utilizes a tempering flow line which maintains a minimum flow to prevent water hammer due to admission of unheated feedwater.

10.D.1.4 NRC Recommendation GS-4

Emergency procedures for transferring to alternate sources of AFW supply should be available to the plant operators. These procedures should include criteria to inform the operators when, and in what order, the transfer to alternate water sources should take place. The following cases should be covered by the procedures:

1. The case in which the primary water supply is not initially available. The procedures for this case should include any operator actions

required to protect the AFW system pumps against self-damage before water flow is initiated.

2. The case in which the primary water supply is being depleted. The procedure for this case should provide for transfer to the alternate water sources prior to draining of the primary water supply.

Response

The primary source of AFW supply is the condensate storage tank. The alternate source of AFW supply is the essential service water system, which is supplied to each pump through separate suction lines with two motor-operated valves in series in each line. These valves open automatically upon a low pressure at the suction of the AFW pumps in conjunction with a low-low steam generator level, loss of offsite power, or safeguards actuation signal.

AFW pumps stop on a low-low suction pressure signal at the pump. They restart automatically when suction pressure becomes available. A low suction alarm is initiated prior to the change-over to warn the operator prior to automatic change-over occurring.

In addition to this automatic action, operating procedures (normal and abnormal) outline specific manual actions which must be taken by the operators to ensure adequate water supply to the AFW system to address the cases listed in the NRC recommendation.

10.D.1.5 NRC Recommendation GS-5

The as-built plant should be capable of providing the required AFW flow for at least 2 hours from one AFW pump train, independent of any a-c power source. If manual AFW system initiation of flow control is required following a complete loss of a-c power, emergency procedures should be established for manually initiating and controlling the system under these conditions. Since the water for cooling of the lube oil for the turbine-driven pump bearings may be dependent on a-c power, design or procedural changes shall be made to eliminate this dependency as soon as practicable. Until this is done, the emergency procedures should provide for an individual to be stationed at the turbine-driven pump in the event of the loss of all a-c power to

monitor pump bearing and/or lube oil temperatures. If necessary, this operator would operate the turbine-driven pump in an on-off mode until a-c power is restored. Adequate lighting powered by direct current (d-c) power sources and communications at local stations should also be provided if manual initiation and control of the AFW system is needed. (See Recommendation GL-3 for the longer term resolution of this concern.)

Response

The as-built system at Byron and Braidwood Stations is capable of supplying the required AFW flow to the steam generators for 2 hours independent of any a-c power source.

10.D.1.6 NRC Recommendation GS-6

The licensee should confirm flow path availability of an AFW system flow train that has been out of service to perform periodic testing or maintenance as follows:

1. Procedures should be implemented to require an operator to determine that the AFW system valves are properly aligned and a second operator to independently verify that the valves are properly aligned.

2. The licensee should propose Technical Specifications to assure that, prior to plant startup following an extended cold shutdown, a flow test would be performed to verify the normal flow path from the primary AFW system water source to the steam generators. The flow test should be conducted with AFW system valves in their normal alignment.

Response

The auxiliary feedwater flow path verification following maintenance will be performed by procedure from one of two ways:

a. a functional verification of the auxiliary feedwater system to deliver feedwater to the steam generators, or

b. an operator independently verifies proper valve alignment.

The auxiliary feedwater system flow path must be demonstrated to be operable following each cold shutdown of greater than 30 days prior to entering Mode 2. This requires a surveillance test that demonstrates flow to the steam generators. This requirement is part of the Technical Specifications.

10.D.1.7 NRC Recommendation GS-7

The licensee should verify that the automatic start auxiliary feedwater system signals and associated circuitry are safety grade. If this cannot be verified, the auxiliary feedwater system automatic initiation system should be modified in the short term to meet the functional requirements listed below. For the longer term, the automatic initiation signals and circuits should be upgraded to meet safety grade requirements, as indicated in Recommendation GL-5.

1. The design should provide for the automatic initiation of the auxiliary feedwater system flow.

2. The automatic initiation signals and circuits should be designed so that a single failure will not result in the loss of auxiliary feedwater system function.

3. Testability of the initiation signals and circuits shall be a feature of the design.

4. The initiation signals and circuits should be powered from the emergency buses.

5. Manual capability to initiate the auxiliary feedwater system from the control room should be retained and should be implemented so that a single failure in the manual circuits will not result in the loss of system function.

6. The a-c motor-driven pumps and valves in the auxiliary feedwater system should be included in the automatic actuation (simultaneous and/or sequential) of the loads to the emergency buses.

7. The automatic initiation signals and circuits shall be designed so that their failure will not result in the loss of manual capability to

initiate the auxiliary feedwater system from the control room.

Response

The automatic initiation signals to the auxiliary feedwater system and the associated circuitry are safety grade.

10.D.1.8 NRC Recommendation GS-8

The licensee should install a system to automatically initiate auxiliary feedwater system flow. This system need not be safety grade; however, in the short term, it should meet the criteria listed below, which are similar to Item 2.1.7 (a) of NUREG-0578. For the longer term, the automatic initiation signals and circuits should be upgraded to meet safety grade requirements, as indicated in recommendation GL-1.

1. The design should provide for the automatic initiation of the auxiliary feedwater system flow.

2. The automatic initiation signals and circuits should be designed so that a single failure will not result in the loss of auxiliary feedwater system function.

3. Testability of the initiating signals and circuits should be a feature of the design.

4. The initiating signals and circuits should be powered from the emergency buses.

5. Manual capability to initiate the auxiliary feedwater system from the control room should be retained and should be implemented so that a single failure in the manual circuits will not result in the loss of system function.

6. The a-c motor-driven pumps and valves in the auxiliary feedwater system should be included in the automatic actuation (simultaneous and/or sequential) of the loads to the emergency buses.

7. The automatic initiation signals and circuits should be designed so that their failure will not result in the loss of manual capability to initiate the auxiliary feedwater system from the control room.

Response

The design of the auxiliary feedwater system meets the criteria listed above.

10.D.2 An Evaluation of the Auxiliary Feedwater System to Additional NRC Generic Short-Term Recommendations (for ESF Pump Trains Only)

The evaluation of the auxiliary feedwater system to additional NRC Generic Short-Term Recommendations is provided in the subsections that follow. Each subsection identifies a separate short-term recommendation and provides a response that shows compliance.

10.D.2.1 NRC Recommendation AGS-1

The licensee should provide redundant level indication and low level alarms in the control room for the AFW system primary water supply to allow the operator to anticipate the need to make up water or transfer to an alternate water supply and prevent a low pump suction pressure condition from occurring. The low level alarm setpoint should allow at least 20 minutes for operator action, assuming that the largest capacity AFW pump is operating.

Response

Each auxiliary feedwater pump suction is equipped with a low suction pressure alarm. The alarm setpoint is sufficient to allow 20 minutes for the operator to take action prior to the pressure setpoint at which automatic suction switchover occurs if the low pressure condition is a result of low condensate storage tank level. Since the pumps are ultimately supplied by a common header from the condensate storage tank, this scheme provides a redundant indication of low condensate storage tank level. In addition, the condensate storage tank is equipped with level indication in the control room and an associated low level alarm.

10.D.2.2 NRC Recommendation AGS-2

The licensee should perform a 72-hour endurance test on all auxiliary feedwater system pumps, if such a test or continuous period of operation has not been accomplished to date. Following the 72-hour pump run, the pumps should be shut down and cooled down and then restarted and run for 1 hour. Test acceptance criteria should include demonstrating that the pumps remain within design limits with respect to bearing oil temperatures and vibration and that pump room ambient conditions (temperature, humidity) do not exceed environmental qualification limits for safety-related equipment in the room.

Response

The NRC recommended auxiliary feedwater endurance test is changed to 48 hour duration from 72 hours. The recommended endurance test was performed and documented on each auxiliary feedwater pump and the startup feedwater pump during the preoperational testing period.

10.D.2.3 NRC Recommendation AGS-3

The licensee should implement the following requirements as specified by Item 2.1.7.b on page A-32 of NUREG-0578:

1. Safety grade indication of auxiliary feedwater flow to each steam generator should be provided in the control room.

2. The auxiliary feedwater flow instrument channels should be powered from the emergency buses consistent with satisfying the emergency power diversity requirements for the auxiliary feedwater system set forth in Branch Technical Position 10-1 of the Standard Review Plan, Section 10.4.9.

Response

The auxiliary feedwater flow to each steam generator is indicated in the control room, meets safety grade requirements, and is powered from the ESF buses.

10.D.2.4 NRC Recommendation AGS-4

Licensees with plants which require local manual realignment of valves to conduct periodic tests on one auxiliary feedwater system train and which have only one remaining auxiliary feedwater train available for operation should propose Technical Specifications to provide that a dedicated individual who is in communication with the control room stationed at the manual valves. Upon instruction from the control room, this operator would realign the valves in the auxiliary feedwater system from the test mode to its operational alignment.

Response

Local manual realignment of valves is not necessary to conduct periodic tests on the auxiliary feedwater system.

10.D.3 An Evaluation of the Auxiliary Feedwater System to the NRC Generic Long-Term Recommendations (for ESF Pump Train Only)

The evaluation of the auxiliary feedwater system to the NRC Generic Long-Term Recommendations is provided in the subsections that follow. Each subsection identifies a separate long-term recommendation and provides a response that shows compliance.

10.D.3.1 NRC Recommendation GL-1

For plants with a manual starting auxiliary feedwater system, the licensee should install a system to automatically initiate the auxiliary feedwater system flow. This system and associated automatic initiation signals should be designed and installed to meet safety grade requirements. Manual auxiliary feedwater system start and control capability should be retained with manual start serving as backup to automatic auxiliary feedwater system initiation.

Response

AFW system flow is automatically initiated.

10.D.3.2 NRC Recommendation GL-2

Licensees with plant designs in which all (primary and alternate) water supplies to the auxiliary feedwater system pass through valves in a single flow path should install redundant parallel flow paths (piping and valves).

Licensees with plant designs in which the primary auxiliary feedwater system water supply passes through valves in a single flow path, but the alternate auxiliary feedwater system water supplies connect to the auxiliary feedwater system pump suction piping downstream of the above valve(s), should install redundant valves parallel to the above valve(s) or provide automatic opening of the valve(s) from the alternate water supply upon low pump suction pressure.

The licensee should propose Technical Specifications to incorporate appropriate periodic inspections to verify the valve positions into the surveillance requirements.

Response

The ESW system supply connects downstream of the condensate supply valves. The valves automatically open on low pump suction pressure and low-low steam generator level.

Periodic testing of the auxiliary feedwater systems is required by the Technical Specifications. This testing includes verification of valve positions.

10.D.3.3 NRC Recommendation GL-3

At least one auxiliary feedwater system pump and its associated flow path and essential instrumentation should automatically initiate auxiliary feedwater system flow and be capable of being operated independently of any a-c power source for at least 2 hours. Conversion of d-c power to a-c power is acceptable.

Response

The diesel-driven auxiliary feedwater system pump, its flow path and its essential instrumentation are capable of being operated independently of any a-c power source for 2 hours.

10.D.3.4 NRC Recommendation GL-4

Licensees having plants with unprotected normal auxiliary feedwater system water supplies should evaluate the design of their auxiliary feedwater systems to determine if automatic protection of the pumps is necessary following a seismic event or a tornado. The time available before pump damage, the alarms and indications available to the control room operator, and the time necessary for assessing the problem and taking action should be considered in determining whether operator action can be relied on to prevent pump damage. Consideration should be given to providing pump protection by means such as automatic switchover of the pump suctions to the alternate safety grade source of water, automatic pump trips on low suction pressure, or upgrading the normal source of water to meet seismic Category I and tornado protection requirements.

Response

To prevent air binding of the auxiliary feedwater pumps, switchover from the condensate storage tank supply to the essential service water system occurs when low pressure is detected on the suction side. Pressure switches are installed on all four Auxiliary Feedwater pumps. The switches function to: 1) alarm low AF pump suction pressure in the main control room, 2) switch the AF pump suction source from the Condensate Storage Tank (CST) to the Essential Service Water System (SX), and 3) trip the respective AF pump on low suction pressure to prevent damage to the pump.

The pressure switches used to transfer the suction supply from the condensate storage tank to the essential service water system are located in the Category I supply piping. Failure of the Category II condensate storage tank or piping will result in a low suction pressure, and the pressure switches will open the essential service water supply valves. In the event that the essential service water supply valves fail to open, the low-low pressure switch setpoint will trip the auxiliary feedwater pump.

10.D.3.5 NRC Recommendation GL-5

The licensee should upgrade the auxiliary feedwater system automatic initiation signals and circuits to meet safety grade requirements.

Response

The automatic initiation signals and circuitry for the auxiliary feedwater system are of safety grade.

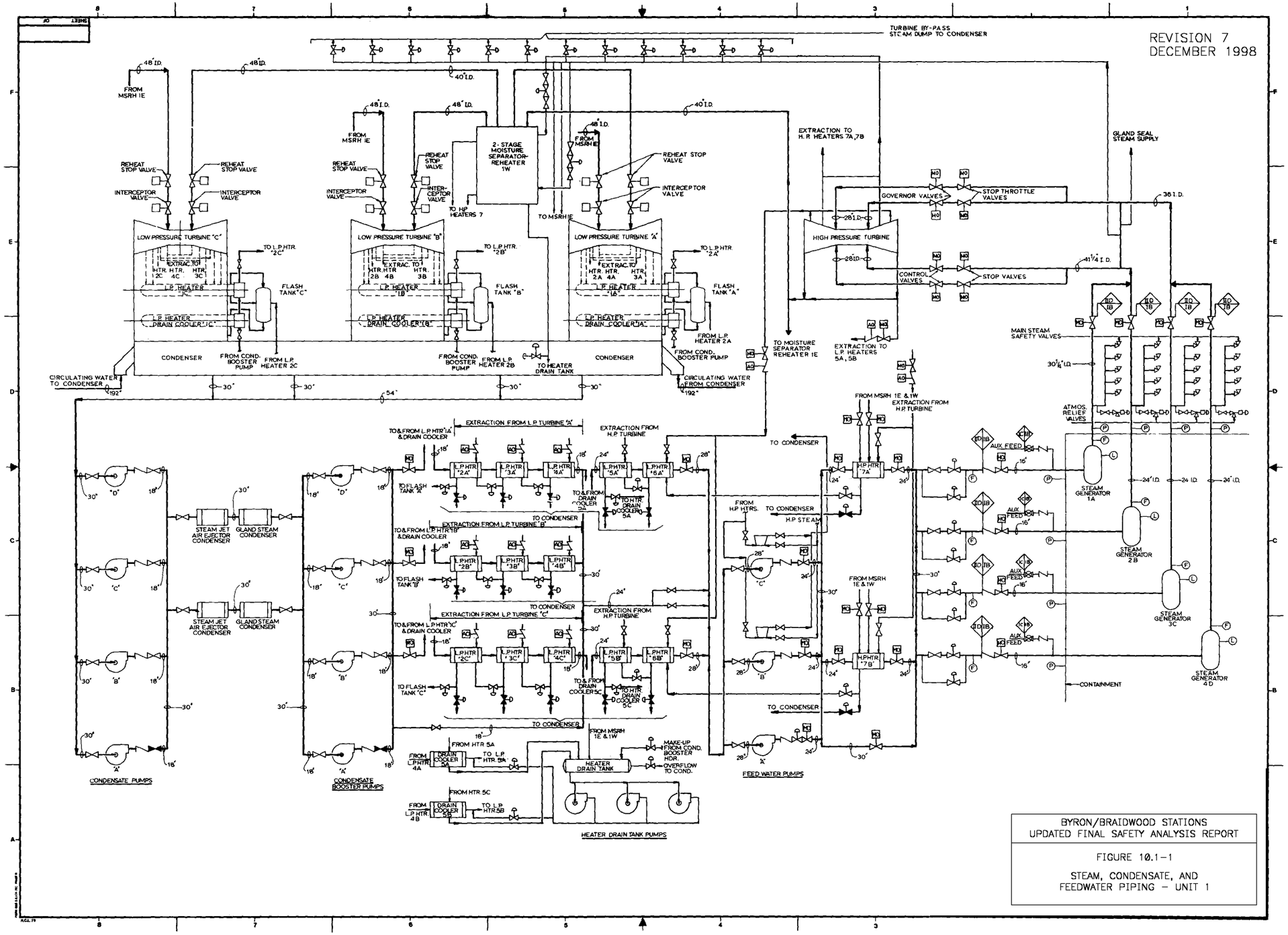

BYRON/BRAIDWOOD STATIONS
UPDATED FINAL SAFETY ANALYSIS REPORT

FIGURE 10.1-1

STEAM, CONDENSATE, AND FEEDWATER PIPING – UNIT 1

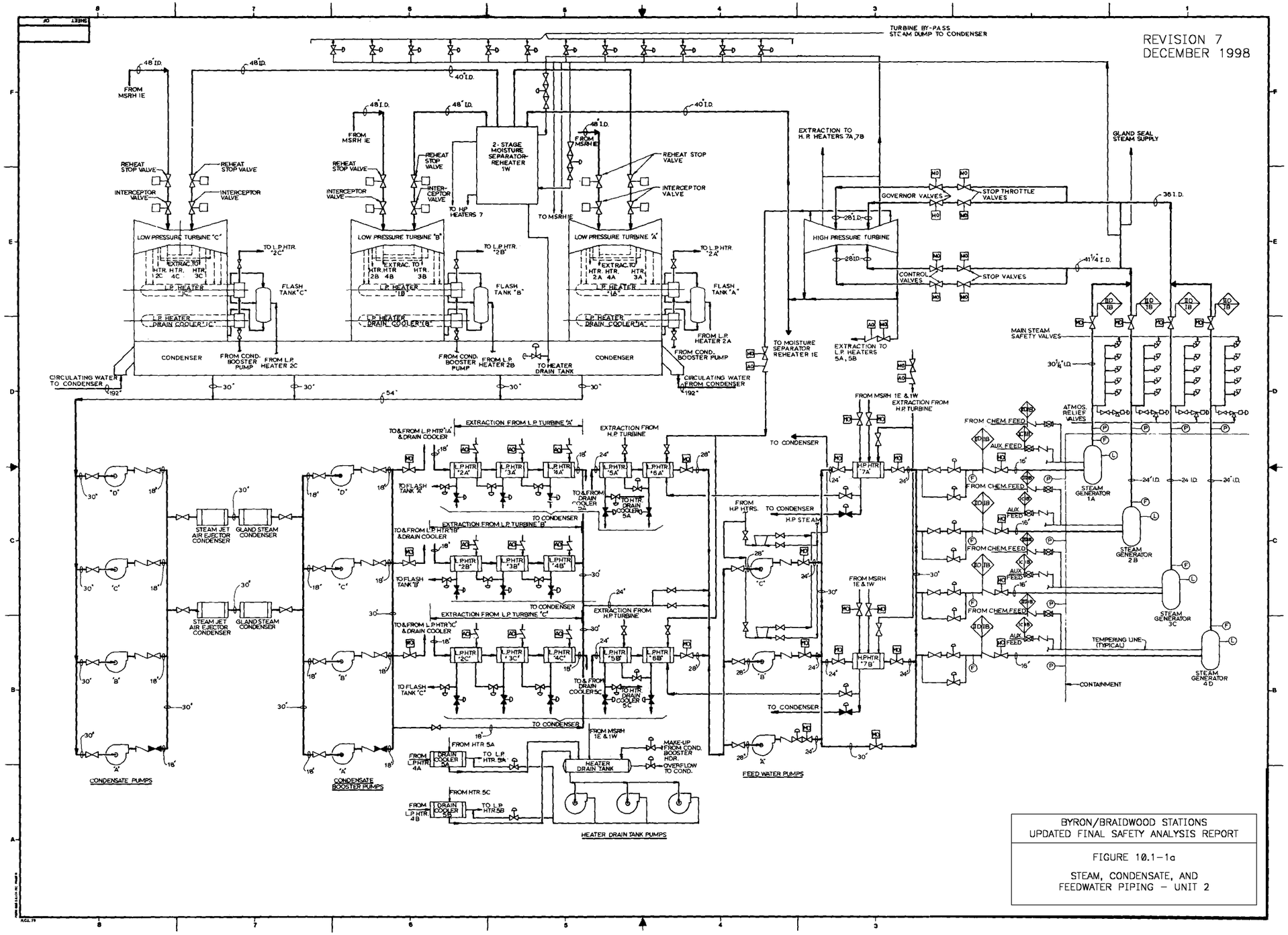

BYRON/BRAIDWOOD STATIONS
UPDATED FINAL SAFETY ANALYSIS REPORT

FIGURE 10.1-1a

STEAM, CONDENSATE, AND FEEDWATER PIPING – UNIT 2

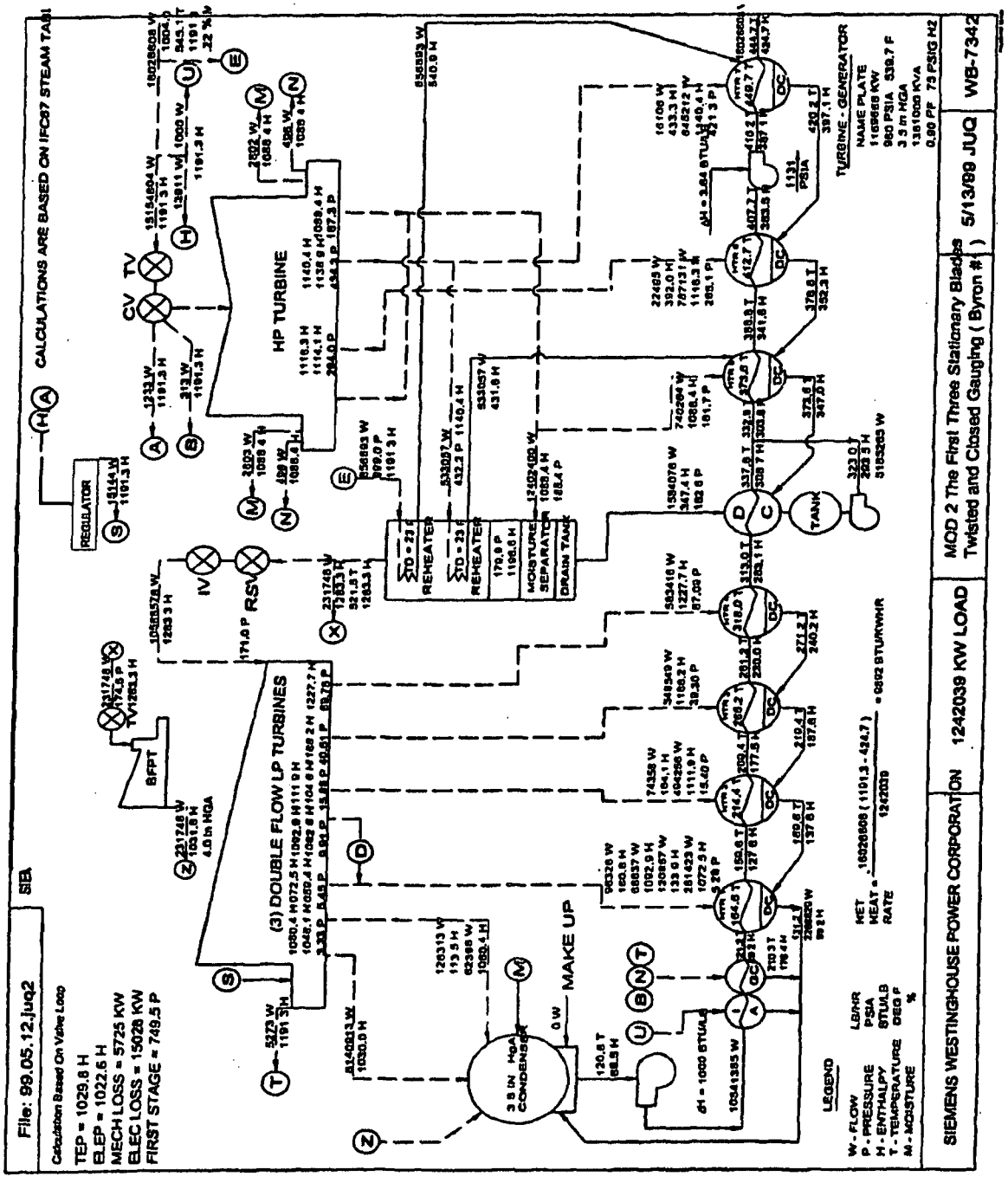

BYRON / BRAIDWOOD STATIONS
UPDATED FINAL SAFETY ANALYSIS REPORT

FIGURE 10.1-2a

UNIT 1 HEAT BALANCE

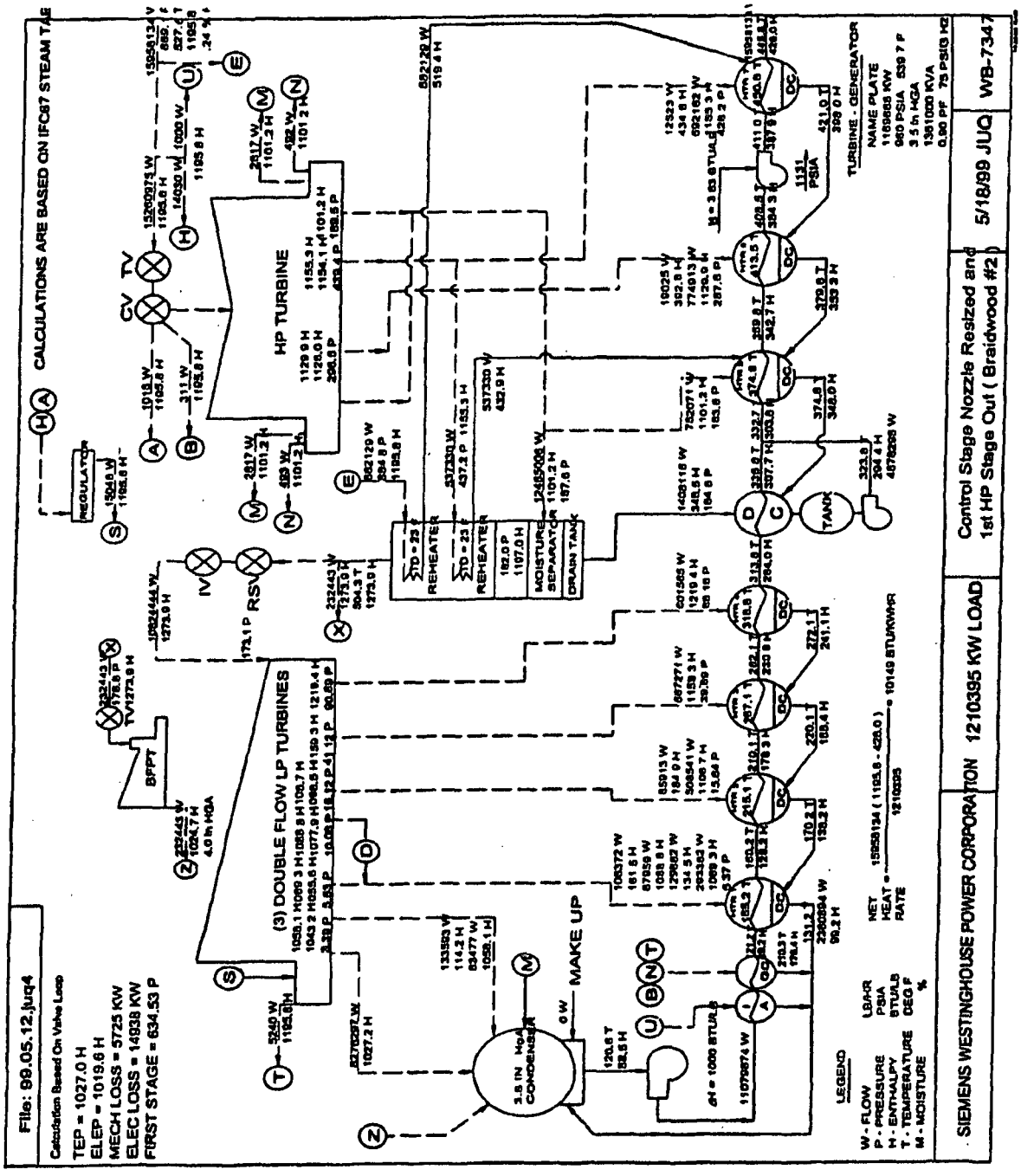

BYRON / BRAIDWOOD STATIONS
UPDATED FINAL SAFETY ANALYSIS REPORT

FIGURE 10.1-2b

UNIT 2 HEAT BALANCE

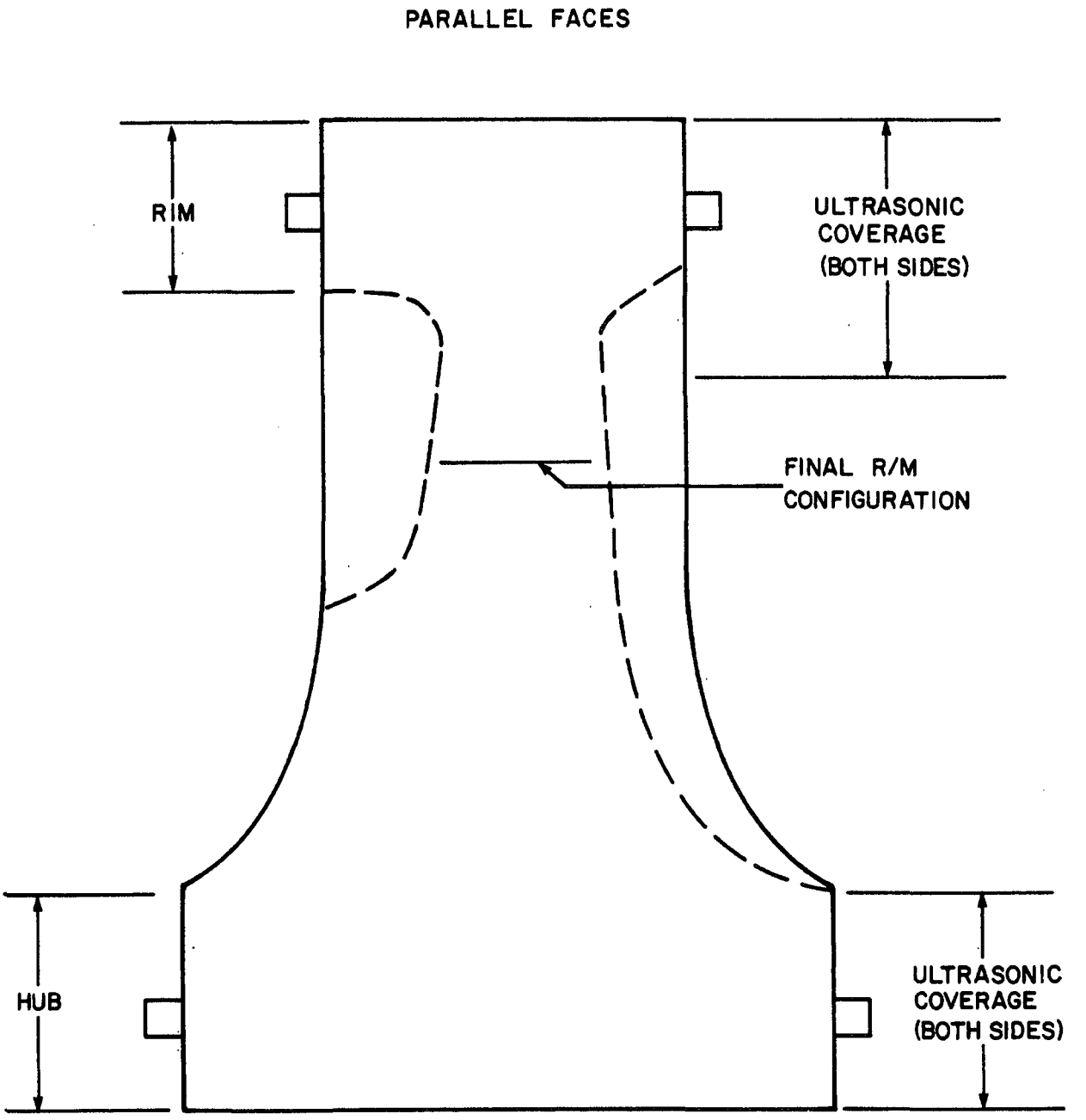

BYRON/BRAIDWOOD STATIONS
UPDATED FINAL SAFETY ANALYSIS REPORT

FIGURE 10.2-1

ULTRASONIC INSPECTION OF
ROUGH MACHINED TURBINE DISCS

Figures 10.2-2 through 10.2-3 have been deleted intentionally.

Figures 10.2-4 through 10.2-7 have been deleted intentionally.

Figure 10.3-1 has been deleted intentionally.

Figures 10.4-1 through 10.4-2 have been deleted intentionally.

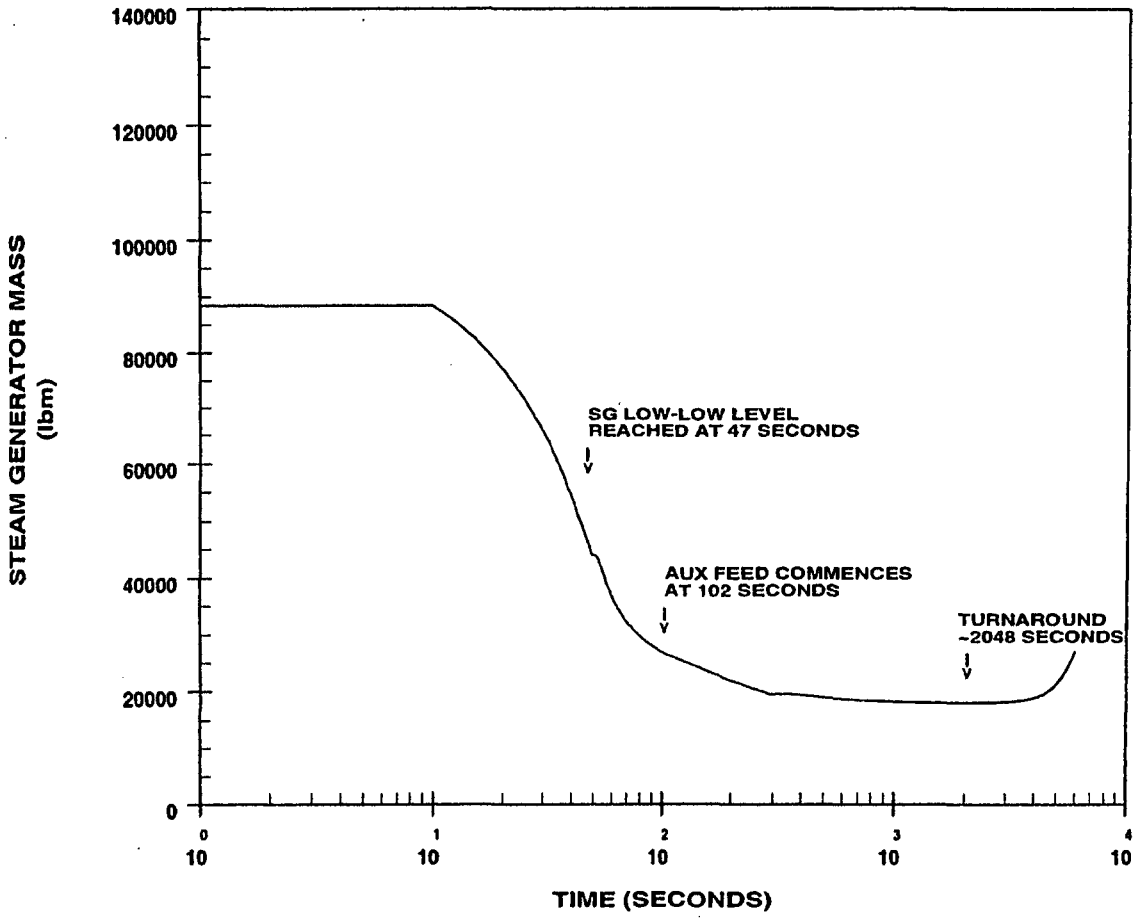

BYRON/BRAIDWOOD STATIONS
Updated Final Safety Analysis Report

FIGURE 10.4-3

STEAM GENERATOR MASS VS. TIME
LOSS OF MAIN FEEDWATER

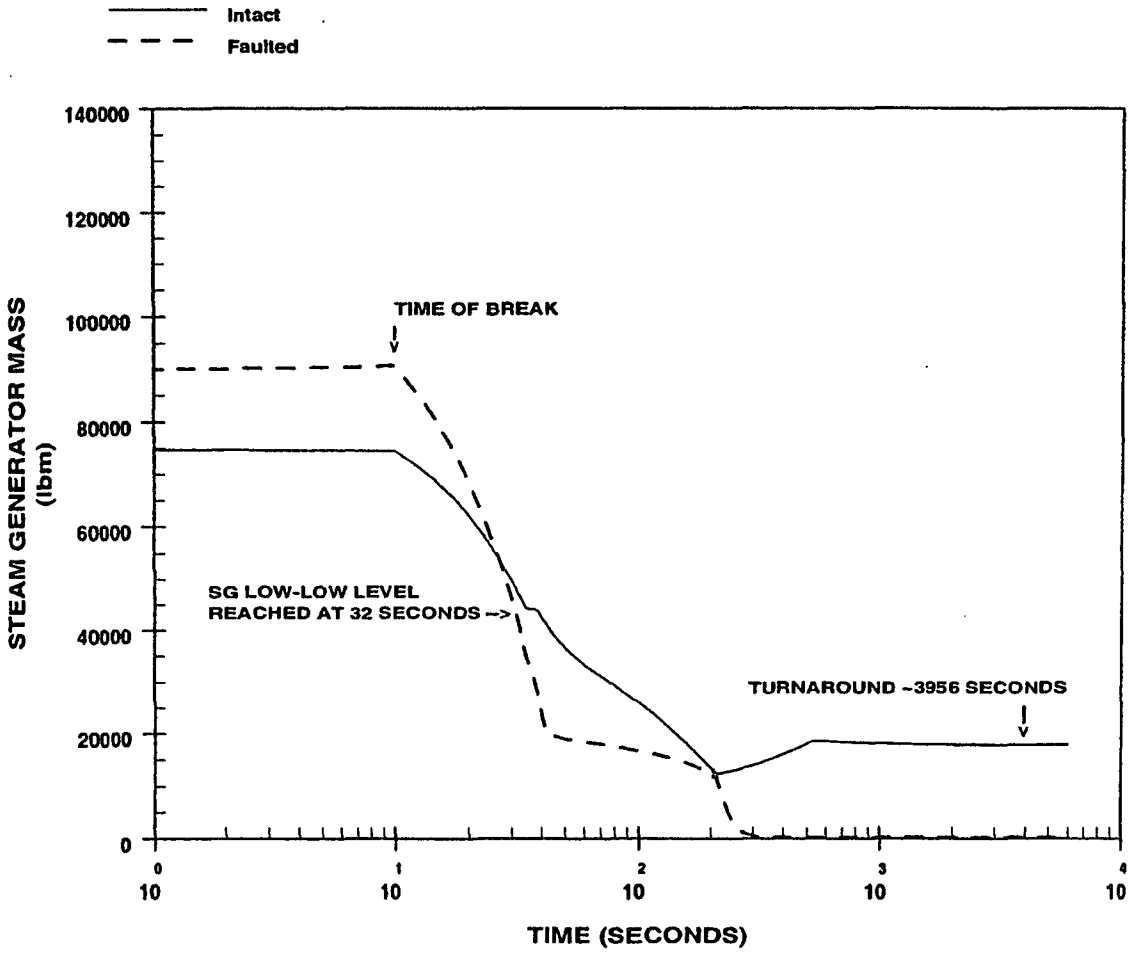

BYRON/BRAIDWOOD STATIONS
Updated Final Safety Analysis Report

FIGURE 10.4-4

STEAM GENERATOR MASS VS. TIME
FEEDLINE BREAK WITH
OFFSITE POWER AVAILABLE