CHAPTER 9.0 - AUXILIARY SYSTEMS

TABLE OF CONTENTS

	PAGE
9.1 FUEL STORAGE AND HANDLING	9.1-1
9.1.1 New Fuel Storage	9.1-2
9.1.1.1 Design Bases	9.1-2
9.1.1.2 Facilities Description	9.1-3
9.1.1.3 Safety Evaluation	9.1-3
9.1.2 Spent Fuel Storage	9.1-6
9.1.2.1 Design Bases	9.1-6
9.1.2.2 Facilities Description	9.1-7
9.1.2.3 Safety Evaluation	9.1-13
9.1.2.3.1 Criticality Control	9.1-13
9.1.2.3.2 Criticality Design Computer Codes	9.1-13
9.1.2.3.3 Reactivity Equivalencing for IFBA in Region 1 and Burnup/Decay Time Credit in Region 2	9.1-14
9.1.2.3.4 Criticality Fuel Design Parameters	9.1-18
9.1.2.3.5 Soluble Boron Requirements	9.1-18
9.1.2.3.6 Reactivity Effect of Axial Distribution in Burnup	9.1-18
9.1.2.3.7 Fuel Storage Rack Structural Design	9.1-19
9.1.2.3.8 Seismic Analysis	9.1-21
9.1.2.3.9 Accident Analysis	9.1-25
9.1.2.3.10 Fuel Rack Design Features	9.1-26
9.1.2.3.11 Dry Cask Storage	9.1-31c
9.1.3 Spent Fuel Pool Cooling and Cleanup System	9.1-31c
9.1.3.1 Design Bases	9.1-31d
9.1.3.2 System Description	9.1-36
9.1.3.3 Safety Evaluation	9.1-41
9.1.3.4 Inspection and Testing Requirements	9.1-43
9.1.4 Fuel Handling System	9.1-44
9.1.4.1 Design Bases	9.1-44
9.1.4.2 System Description	9.1-45
9.1.4.2.1 Refueling Procedure	9.1-46
9.1.4.2.2 Component Description	9.1-49
9.1.4.3 Safety Evaluation	9.1-54

TABLE OF CONTENTS (Cont'd)

	PAGE
9.1.4.3.1 Safe Handling	9.1-54
9.1.4.3.2 Seismic Considerations	9.1-61
9.1.4.3.3 Containment Pressure Boundary Integrity	9.1-62
9.1.4.3.4 Radiation Shielding	9.1-62
9.1.4.4 Inspection and Testing Requirements	9.1-62
9.1.4.5 Instrumentation Requirements	9.1-64
9.1.5 Control of Heavy Loads	9.1-64
9.1.5.1 Introduction/Licensing Background	9.1-64
9.1.5.2 Safety Basis	9.1-64
9.1.5.3 Scope of Heavy Load Handling Systems	9.1-64
9.1.5.4 Control of Heavy Loads Program	9.1-64a
9.1.5.4.1 Byron and Braidwood Station Commitments in Response to NUREG 0612, Phase I Elements	9.1-64a
9.1.5.4.1.1 Safety Load Paths	9.1-64a
9.1.5.4.1.2 Load Handling Procedures	9.1-64b
9.1.5.4.1.3 Qualifications, Training, and Conduct of Crane Operators	9.1-64b
9.1.5.4.1.4 Special Lifting Devices	9.1-64b
9.1.5.4.1.5 Lifting Devices not Specially Designed	9.1-64b
9.1.5.4.1.6 Inspection and Testing of Cranes	9.1-64b
9.1.5.4.1.7 Crane Design	9.1-64c
9.1.5.4.2 Reactor Pressure Vessel Head (RPVH) Lifting Procedure	9.1-64c
9.1.5.4.3 Single Failure Proof Cranes for Spent Fuel Casks	9.1-64d
9.1.5.5 Safety Evaluation	9.1-64d
9.1.6 References	9.1-64d
9.2 WATER SYSTEMS	9.2-1
9.2.1 Station Service Water Systems	9.2-1
9.2.1.1 Nonessential Service Water System	9.2-1
9.2.1.1.1 Safety Evaluation	9.2-1
9.2.1.1.2 Tests and Inspections	9.2-1
9.2.1.1.3 Chemistry Control	9.2-1
9.2.1.2 Essential Service Water System	9.2-2
9.2.1.2.1 Design Bases	9.2-2
9.2.1.2.2 System Description	9.2-2
9.2.1.2.3 Safety Evaluation	9.2-3
9.2.1.2.4 Leak Detection	9.2-5
9.2.1.2.5 Chemistry Control	9.2-6
9.2.1.2.6 Instrumentation Applications	9.2-6
9.2.1.2.7 Flood Protection	9.2-6
9.2.2 Component Cooling System	9.2-7
9.2.2.1 Design Bases	9.2-7
9.2.2.2 System Design and Description	9.2-7a

TABLE OF CONTENTS (Cont'd)

		PAGE
9.2.2.2.1	Equipment Served	9.2-8
9.2.2.2.2	Component and Instrumentation Description	9.2-9a
9.2.2.2.2.1	Component Cooling Piping	9.2-9a
9.2.2.2.2.2	Component Cooling Valves	9.2-10
9.2.2.2.2.3	Component Cooling Surge Tanks	9.2-10
9.2.2.2.2.4	Component Cooling Heat Exchangers	9.2-10
9.2.2.2.2.5	Component Cooling Pumps	9.2-10
9.2.2.2.2.6	Component Cooling Instrumentation	9.2-11
9.2.2.3	System Operation	9.2-12a
9.2.2.3.1	Reactor Startup	9.2-13
9.2.2.3.2	Power Generation and Hot Standby Operation	9.2-13
9.2.2.3.3	Reactor Shutdown	9.2-13
9.2.2.3.4	Refueling	9.2-14
9.2.2.3.5	Post-LOCA Recovery	9.2-15
9.2.2.4	Safety Evaluation	9.2-15
9.2.2.4.1	System Availability and Reliability	9.2-16
9.2.2.4.2	Leakage Provisions and Activity Release	9.2-17
9.2.2.4.3	Incident Control	9.2-18
9.2.2.4.4	Shared Function	9.2-18
9.2.2.4.5	Electrical Power Supply	9.2-20
9.2.2.5	Tests and Inspections	9.2-20
9.2.3	Demineralized Water Makeup System	9.2-20
9.2.3.1	Design Bases (Byron)	9.2-22
9.2.3.2	System Description (Byron)	9.2-22
9.2.3.2.1	General Description and System Operation (Byron)	9.2-22
9.2.3.2.2	Component Description (Byron)	9.2-23
9.2.3.2.2.1	Sand Filters (Byron)	9.2-23
9.2.3.2.2.2	Demineralizer Trains (Byron)	9.2-23
9.2.3.2.2.3	Demineralizer Regeneration Equipment (Byron)	9.2-23
9.2.3.2.2.4	Decarbonator (Byron)	9.2-24
9.2.3.3	Safety Evaluation (Byron)	9.2-24
9.2.3.4	Instrumentation Application (Byron)	9.2-24
9.2.3.1	Design Bases (Braidwood)	9.2-25
9.2.3.2	System Description (Braidwood)	9.2-25
9.2.3.2.1	General Description and System Operation (Braidwood)	9.2-25
9.2.3.2.2	Component Description (Braidwood)	9.2-26
9.2.3.2.2.1	Lime Softeners (Braidwood)	9.2-26
9.2.3.2.2.2	Sand Filters (Braidwood)	9.2-26
9.2.3.2.2.3	Carbon Filters (Braidwood)	9.2-26
9.2.3.2.2.4	Demineralizer Trains (Braidwood)	9.2-26
9.2.3.2.2.5	Demineralizer Regeneration Equipment (Braidwood)	9.2-27
9.2.3.3	Safety Evaluation (Braidwood)	3.2-27
9.2.3.4	Instrumentation Application (Braidwood)	9.2-27

TABLE OF CONTENTS (Cont'd)

		PAGE
9.2.4	Potable and Sanitary Water Systems	9.2-28
9.2.4.1	Design Basis	9.2-28
9.2.4.2	System Description	9.2-28
9.2.4.3	Safety Evaluation	9.2-28
9.2.4.4	Testing and Inspection	9.2-28
9.2.5	Ultimate Heat Sink (Byron)	9.2-29
9.2.5.1	Design Basis (Byron)	9.2-29
9.2.5.2	System Description (Byron)	9.2-29
9.2.5.2.1	Essential Service Water Cooling Towers (Byron)	9.2-29
9.2.5.2.2	Category I Essential Service Water Makeup System (Byron)	9.2-30
9.2.5.2.3	Category II Deep Well Pumps (Byron)	9.2.31
9.2.5.3	Safety Evaluations (Byron)	9.2-32
9.2.5.3.1	Ultimate Heat Sink Design Basis (Byron)	9.2-32
9.2.5.3.1.1	Design Basis Reconstitution (Byron)	9.2-32a
9.2.5.3.1.1.1	Containment Heat Load Calculations (Byron)	9.2-32a
9.2.5.3.1.1.2	Steady State Tower Performance Analysis (Byron)	9.2-32c
9.2.5.3.1.1.3	Time Dependent Basin Temperature Calculations (Byron)	9.2-32c
9.2.5.3.1.1.4	Conclusion (Byron)	9.2-32d
9.2.5.3.1.2	Combination of Seismic Event and Drought (Byron)	9.2-33
9.2.5.3.1.3	Ice Buildup (Byron)	9.2-34
9.2.5.3.1.4	Frazzle Ice (Byron)	9.2-35
9.2.5.3.2	Essential Service Water Cooling Towers (Byron)	9.2-35
9.2.5.3.3	Category I Essential Service Water Makeup System (Byron)	9.2-38
9.2.5.3.4	Category II Deep Well Pumps (Byron)	9.2-39
9.2.5.3.5	Makeup and Minimum Basin Levels	9.2-39
9.2.5.4	Tests and Inspections (Byron)	9.2-42
9.2.5.5	Instrumentation Requirements (Byron)	9.2-42
9.2.5	Ultimate Heat Sink (Braidwood)	9.2-43
9.2.5.1	Design Basis (Braidwood)	9.2-43
9.2.5.2	System Description (Braidwood)	9.2-43
9.2.5.3	Safety Evaluation (Braidwood)	9.2-44
9.2.5.4	Tests and Inspections (Braidwood)	9.2-46
9.2.5.5	Instrumentation Requirements (Braidwood)	9.2-46
9.2.6	Condensate Storage Facilities	9.2-47
9.2.6.1	Design Bases	9.2-47
9.2.6.2	System Description	9.2-47
9.2.6.3	Safety Evaluation	9.2-48
9.2.6.4	Testing and Inspections	9.2-48
9.2.6.5	Instrumentation Application	9.2-48
9.2.7	Plant Chilled Water System	9.2-48
9.2.7.1	Containment Chilled Water System	9.2-49

TABLE OF CONTENTS (Cont'd)

	PAGE
9.2.7.1.1 Design Bases	9.2-49
9.2.7.1.1.1 Safety Design Bases	9.2-49
9.2.7.1.1.2 Power Generation Design Bases	9.2-49
9.2.7.1.2 System Description	9.2-50
9.2.7.1.3 Safety Evaluation	9.2-51
9.2.7.1.4 Testing and Inspection	9.2-51
9.2.7.2 Service Building Chilled Water System	9.2-51
9.2.7.2.1 Design Bases	9.2-52
9.2.7.2.1.1 Safety Design Bases	9.2-52
9.2.7.2.1.2 Power Generation Design Bases	9.2-52
9.2.7.2.2 System Description	9.2-52
9.2.7.2.3 Safety Evaluation	9.2-53

TABLE OF CONTENTS (Cont'd)

	PAGE
9.2.7.2.4 Testing and Inspection	9.2-53
9.2.7.3 Auxiliary Building Chilled Water System	9.2-53
9.2.7.3.1 Design Bases	9.2-53
9.2.7.3.1.1 Safety Design Bases	9.2-53
9.2.7.3.1.2 Power Generation Design Bases	9.2-54
9.2.7.3.2 System Description	9.2-54
9.2.7.3.3 Safety Evaluation	9.2-55
9.2.7.3.4 Testing and Inspection	9.2-55
9.2.7.4 Control Room Chilled Water System	9.2-55
9.2.7.4.1 Design Bases	9.2-55
9.2.7.4.1.1 Safety Design Bases	9.2-55
9.2.7.4.1.2 Power Generation Design Bases	9.2-56
9.2.7.4.2 System Description	9.2-56
9.2.7.4.3 Safety Evaluation	9.2-57
9.2.7.4.4 Testing and Inspection	9.2-57
9.2.8 Station Heating System	9.2-58
9.2.8.1 Design Bases	9.2-58
9.2.8.1.1 Safety Design Bases	9.2-58
9.2.8.1.2 Power Generation Design Bases	9.2-59
9.2.8.2 System Description	9.2-59
9.2.8.3 Safety Evaluation	9.2-61
9.2.8.4 Testing and Inspection	9.2-61
9.2.9 References	9.2-61
9.3 PROCESS AUXILIARIES	9.3-1
9.3.1 Compressed Air Systems	9.3-1
9.3.1.1 Design Bases	9.3-1
9.3.1.2 System Description	9.3-1
9.3.1.3 Safety Evaluation	9.3-2
9.3.1.4 Tests and Inspections	9.3-3
9.3.1.5 Instrumentation Applications	9.3-3
9.3.2 Sampling Systems	9.3-4
9.3.2.1 Primary Sampling System	9.3-4
9.3.2.1.1 Design Bases	9.3-4
9.3.2.1.1.1 Contamination and Radiation Protection	9.3-4
9.3.2.1.2 System Description	9.3-4
9.3.2.1.2.1 Component Description	9.3-5
9.3.2.1.2.2 System Operation	9.3-7
9.3.2.1.3 Safety Evaluation	9.3-8
9.3.2.1.3.1 Availability and Reliability	9.3-8
9.3.2.1.3.2 Leakage Provisions	9.3-8
9.3.2.1.3.3 Exposure Control	9.3-8
9.3.2.1.3.4 Incident Control	9.3-8
9.3.2.1.4 Tests and Inspections	9.3-8
9.3.2.2 Secondary Sampling Systems	9.3-8
9.3.2.2.1 Design Bases	9.3-8
9.3.2.2.2 System Description	9.3-9

TABLE OF CONTENTS (Cont'd)

		PAGE
9.3.2.2.3	Safety Evaluation	9.3-11
9.3.2.2.4	Tests and Inspections	9.3-11
9.3.2.2.5	Instrumentation Application	9.3-12
9.3.3	Equipment and Floor Drainage System	9.3-19
9.3.3.1	Auxiliary Building Leak Detection Sumps	9.3-19
9.3.3.2	Auxiliary Building Safety-Related Components Area Flood Analysis	9.3-20
9.3.4	Chemical and Volume Control System	9.3-24
9.3.4.1	Design Bases	9.3-25
9.3.4.1.1	Reactivity Control	9.3-25
9.3.4.1.1.1	Regulation of Reactor Coolant Inventory	9.3-25
9.3.4.1.1.2	Reactor Coolant Purification	9.3-26
9.3.4.1.1.3	Chemical Additions for Corrosion Control	9.3-26
9.3.4.1.1.4	Seal Water Injection	9.3-26
9.3.4.1.1.5	Hydrostatic Testing of the Reactor Coolant System	9.3-26
9.3.4.1.1.6	Emergency Core Cooling	9.3-26
9.3.4.1.2	System Description	9.3-26
9.3.4.1.2.1	Charging, Letdown, and Seal Water System	9.3-27
9.3.4.1.2.2	Reactor Coolant Purification and Chemistry Control System	9.3-29
9.3.4.1.2.3	Reactor Makeup Control System	9.3-31
9.3.4.1.2.4	Boron Thermal Regeneration System	9.3-35
9.3.4.1.2.5	Component Description	9.3-37
9.3.4.1.2.6	System Operation	9.3-50
9.3.4.1.3	Safety Evaluation	9.3-54
9.3.4.1.3.1	Reactivity Control	9.3-54

TABLE OF CONTENTS (Cont'd)

		PAGE
9.3.4.1.3.2	Reactor Coolant Purification	9.3-56
9.3.4.1.3.3	Seal Water Injection	9.3-57
9.3.4.1.3.4	Hydrostatic Testing of Reactor Coolant System	9.3-57
9.3.4.1.3.5	Leakage Provisions	9.3-57
9.3.4.1.3.6	Ability to Meet the Safeguards Function	9.3-58
9.3.4.1.3.7	Heat Tracing	9.3-58
9.3.4.1.3.8	Abnormal Operation	9.3-58
9.3.4.1.3.9	Failure Mode and Effects Analysis	9.3-58
9.3.4.1.4	Tests and Inspections	9.3-60
9.3.4.1.5	Instrumentation Application	9.3-60
9.3.4.2	Boron Recycle System	9.3-61
9.3.4.2.1	Design Bases	9.3-61
9.3.4.2.1.1	Collection Requirements	9.3-61
9.3.4.2.1.2	Capacity Requirement	9.3-62
9.3.4.2.1.3	Purification Requirement	9.3-62
9.3.4.2.2	System Description	9.3-63
9.3.4.2.2.1	Component Descriptions	9.3-64
9.3.4.2.2.2	System Operation	9.3-66
9.3.4.2.3	Safety Evaluation	9.3-67
9.3.4.2.4	Tests and Inspections	9.3-67
9.3.4.2.5	Instrumentation Application	9.3-67
9.3.4.2.5.1	Temperature	9.3-67
9.3.4.2.5.2	Pressure	9.3-67
9.3.4.2.5.3	Flow	9.3-69
9.3.4.2.5.4	Level	9.3-69
9.4	AIR CONDITIONING, HEATING, COOLING, AND VENTILATION SYSTEMS	9.4-1
9.4.1	Control Room HVAC System	9.4-1
9.4.1.1	Design Bases	9.4-1
9.4.1.1.1	Safety Design Bases	9.4-1
9.4.1.1.2	Power Generation Design Bases	9.4-2
9.4.1.2	System Description	9.4-2
9.4.1.3	Safety Evaluation	9.4-5
9.4.1.4	Testing and Inspection	9.4-6
9.4.2	Spent Fuel Pool Area Ventilation System	9.4-7
9.4.3	Auxiliary and Radwaste Area Ventilation Systems	9.4-7
9.4.3.1	Radwaste and Remote Shutdown Control Room HVAC System	9.4-7
9.4.3.1.1	Design Bases	9.4-7
9.4.3.1.1.1	Safety Design Basis	9.4-7
9.4.3.1.1.2	Power Generation Design Basis	9.4-8
9.4.3.1.2	System Description	9.4-8
9.4.3.1.3	Safety Evaluation	9.4-9

TABLE OF CONTENTS (Cont'd)

	PAGE
9.4.3.1.4 Inspection and Testing Requirements	9.4-9
9.4.3.2 Laboratory HVAC System	9.4-9
9.4.3.2.1 Design Bases	9.4-10
9.4.3.2.1.1 Safety Design Basis	9.4-10
9.4.3.2.1.2 Power Generation Design Basis (Byron)	9.4-10a
9.4.3.2.2 System Description (Byron)	9.4-10a
9.4.3.2.1.2 Power Generation Design Basis (Braidwood)	9.4-10b
9.4.3.2.2 System Description (Braidwood)	9.4-10b
9.4.3.2.3 Safety Evaluation	9.4-12
9.4.3.2.4 Inspection and Testing Requirements	9.4-12
9.4.3.3 Radwaste Building Ventilation System	9.4-12
9.4.3.3.1 Design Bases	9.4-13
9.4.3.3.1.1 Safety Design Bases	9.4-13
9.4.3.3.1.2 Power Generation Design Bases	9.4-13
9.4.3.3.2 System Description	9.4-14
9.4.3.3.3 Safety Evaluation	9.4-16
9.4.3.3.4 Inspection and Testing Requirements	9.4-16
9.4.3.4 Auxiliary Building HVAC System	9.4-17
9.4.4 Turbine Area Ventilation System	9.4-17
9.4.5 Engineered Safety Features Ventilation System	9.4-17
9.4.5.1 Auxiliary Building HVAC System	9.4-18
9.4.5.1.1 Design Bases	9.4-18
9.4.5.1.2 System Description	9.4-20c
9.4.5.1.3 Safety Evaluation	9.4-24
9.4.5.1.4 Testing and Inspection	9.4-25
9.4.5.2 Diesel-Generator Facilities Ventilation System	9.4-25
9.4.5.2.1 Diesel-Generator Room and Day Tank Room Ventilation Systems	9.4-26
9.4.5.2.1.1 Design Bases	9.4-26
9.4.5.2.1.2 System Description	9.4-27
9.4.5.2.1.3 Safety Evaluation	9.4-28
9.4.5.2.1.4 Inspection and Testing	9.4-28
9.4.5.2.2 Diesel Oil Storage Room Ventilation System	9.4-29
9.4.5.2.2.1 Design Basis	9.4-29
9.4.5.2.2.2 System Description	9.4-29
9.4.5.2.2.3 Safety Evaluation	9.4-30
9.4.5.2.2.4 Inspection and Testing	9.4-30a
9.4.5.3 Miscellaneous Electric Equipment Room Ventilation System	9.4-31
9.4.5.3.1 Design Bases	9.4-31
9.4.5.3.1.1 Safety Design Bases	9.4-31
9.4.5.3.1.2 Power Generation Design Bases	9.4-32
9.4.5.3.2 System Description	9.4-32
9.4.5.3.3 Safety Evaluation	9.4-33
9.4.5.3.4 Inspection and Testing	9.4-33a
9.4.5.4 ESF Switchgear Ventilation System	9.4-34
9.4.5.4.1 Design Bases	9.4-34
9.4.5.4.1.1 Safety Design Bases	9.4-34

TABLE OF CONTENTS (Cont'd)

	PAGE
9.4.5.4.1.2 Power Generation Design Bases	9.4-34
9.4.5.4.2 System Description	9.4-35
9.4.5.4.3 Safety Evaluation	9.4-36
9.4.5.4.4 Inspection and Testing	9.4-36a
9.4.6 Pump House Ventilation Systems (Byron)	9.4-38
9.4.6.1 Circulating Water Pump House Ventilation System (Byron)	9.4-38
9.4.6.1.1 Design Basis (Byron)	9.4-38
9.4.6.1.1.1 Safety Design Bases (Byron)	9.4-38
9.4.6.1.1.2 Power Generation Design Bases (Byron)	9.4-38
9.4.6.1.2 System Description (Byron)	9.4-39
9.4.6.1.3 Safety Evaluation (Byron)	9.4-39
9.4.6.1.4 Inspection and Testing (Byron)	9.4-40
9.4.6.2 River Screen House Ventilation System (Byron)	9.4-40
9.4.6.2.1 Design Bases (Byron)	9.4-40
9.4.6.2.1.1 Safety Design Bases (Byron)	9.4-40
9.4.6.2.1.2 Power Generation Design Bases (Byron)	9.4-40
9.4.6.2.2 System Description (Byron)	9.4-41
9.4.6.2.3 Safety Evaluation (Byron)	9.4-42
9.4.6.2.4 Inspection and Testing (Byron)	9.4-42
9.4.6 Pump House Ventilation Systems (Braidwood)	9.4-43
9.4.6.1 Lake Screen House Ventilation System (Braidwood)	9.4-43
9.4.6.1.1 Design Bases (Braidwood)	9.4-43
9.4.6.1.1.1 Safety Design Bases (Braidwood)	9.4-43
9.4.6.1.1.2 Power Generation Design Bases (Braidwood)	9.4-43
9.4.6.1.2 System Description (Braidwood)	9.4-43
9.4.6.1.3 Safety Evaluation (Braidwood)	9.4-44
9.4.6.1.4 Inspection and Testing (Braidwood)	9.4-44
9.4.6.2 River Screen House Ventilation System (Braidwood)	9.4-45
9.4.6.2.1 Design Bases (Braidwood)	9.4-45
9.4.6.2.1.1 Safety Design Bases (Braidwood)	9.4-45
9.4.6.2.1.2 Power Generation Design Bases (Braidwood)	9.4-45
9.4.6.2.2 System Description (Braidwood)	9.4-45
9.4.6.2.3 Safety Evaluation (Braidwood)	9.4-46
9.4.6.2.4 Inspection and Testing (Braidwood)	9.4-46
9.4.7 Off-Gas and Miscellaneous Tank Vent Filter System	9.4-48
9.4.7.1 Off-Gas Filter System	9.4-48
9.4.7.1.1 Design Bases	9.4-48
9.4.7.1.1.1 Safety Design Bases	9.4-48
9.4.7.1.1.2 Power Generation Design Bases	9.4-48
9.4.7.1.2 System Description	9.4-48
9.4.7.1.3 Safety Evaluation	9.4-49

TABLE OF CONTENTS (Cont'd)

	PAGE
9.4.7.1.4 Testing and Inspection	9.4-50
9.4.7.2 Miscellaneous Tank Vent Filter System	9.4-50
9.4.7.2.1 Design Bases	9.4-50
9.4.7.2.1.1 Safety Design Bases	9.4-50
9.4.7.2.1.2 Power Generation Design Bases	9.4-50
9.4.7.2.2 System Description	9.4-50
9.4.7.2.3 Safety Evaluation	9.4-53
9.4.7.2.4 Testing and Inspection	9.4-53
9.4.8 Containment Ventilation System	9.4-53
9.4.8.1 Reactor Containment Fan Cooler (RCFC) Subsystem	9.4-54
9.4.8.1.1 Design Bases	9.4-54
9.4.8.1.2 System Description	9.4-54
9.4.8.1.3 Safety Evaluation	9.4-55
9.4.8.1.4 Inspection and Testing Requirements	9.4-55
9.4.8.1.5 Instrumentation Requirements	9.4-55
9.4.8.2 Containment Charcoal Filter Units Subsystem	9.4-55
9.4.8.2.1 Design Basis	9.4-55
9.4.8.2.1.1 Safety Design Basis	9.4-55
9.4.8.2.1.2 Power Generation Design Basis	9.4-55
9.4.8.2.2 System Description	9.4-55
9.4.8.2.3 Safety Evaluation	9.4-56
9.4.8.2.4 Testing and Inspection	9.4-56
9.4.8.3 Control Rod Drive Mechanism (CRDM) Ventilation Subsystem	9.4-57
9.4.8.3.1 Design Bases	9.4-57
9.4.8.3.2 System Description	9.4-57
9.4.8.3.3 Safety Evaluation	9.4-57
9.4.8.3.4 Inspection and Testing Requirements	9.4-58
9.4.8.3.5 Instrumentation Requirements	9.4-58
9.4.8.4 Reactor Cavity Ventilation Subsystem	9.4-58
9.4.8.4.1 Design Bases	9.4-58
9.4.8.4.1.1 Safety Design Bases	9.4-59
9.4.8.4.1.2 Power Generation Design Bases	9.4-59
9.4.8.4.2 System Description	9.4-59
9.4.8.4.3 Safety Evaluation	9.4-59a
9.4.8.4.4 Testing and Inspection	9.4-60
9.4.8.5 Manipulator Crane Ventilation Subsystems (DELETED)	9.4-60
9.4.9 Primary Containment Purge System	9.4-60
9.4.9.1 Miniflow Purge System	9.4-60
9.4.9.1.1 Design Bases	9.4-60
9.4.9.1.2 System Description	9.4-61
9.4.9.1.3 Safety Evaluation	9.4-62
9.4.9.1.4 Inspection and Testing	9.4-62
9.4.9.2 Normal Containment Purge System	9.4-63
9.4.9.2.1 Design Bases	9.4-63

TABLE OF CONTENTS (Cont'd)

		PAGE
9.4.9.2.2	System Description	9.4-63
9.4.9.2.3	Safety Evaluation	9.4-65
9.4.9.2.4	Inspection and Testing	9.4-65
9.4.9.3	Post-LOCA Purge System	9.4-65
9.4.9.3.1	Design Bases	9.4-65
9.4.9.3.2	System Description	9.4-66
9.4.9.3.3	Safety Evaluation	9.4-67
9.4.9.3.4	Inspection and Testing	9.4-68
9.4.10	Miscellaneous HVAC System	9.4-68
9.4.10.1	Control Room Offices HVAC System	9.4-68
9.4.10.1.1	Design Bases	9.4-68
9.4.10.1.1.1	Safety Design Bases	9.4-68
9.4.10.1.1.2	Power Generation Design Bases	9.4-68
9.4.10.1.2	System Description	9.4-69
9.4.10.1.3	Safety Evaluation	9.4-70
9.4.10.1.4	Testing and Inspection	9.4-70
9.4.10.2	Main Steam Pipe Tunnel and Safety Valve Enclosures Ventilation System	9.4-71
9.4.10.2.1	Design Bases	9.4-71
9.4.10.2.1.1	Safety Design Basis	9.4-71
9.4.10.2.1.2	Power Generation Design Bases	9.4-71
9.4.10.2.2	System Description	9.4-71
9.4.10.2.3	Safety Evaluation	9.4-72
9.4.10.2.4	Testing and Inspection	9.4-72
9.5	OTHER AUXILIARY SYSTEMS	9.5-1
9.5.1	Fire Protection Systems	9.5-1
9.5.2	Communication Systems	9.5-1
9.5.2.1	Design Bases	9.5-1
9.5.2.2	Inspection and Testing Requirements	9.5-4
9.5.3	Lighting Systems	9.5-4
9.5.3.1	General Design	9.5-4
9.5.4	Diesel-Generator Fuel Oil Storage and Transfer System	9.5-6
9.5.4.1	Design Bases	9.5-6
9.5.4.2	System Description	9.5-6
9.5.4.3	Safety Evaluation	9.5-10
9.5.4.4	Inspection and Testing	9.5-11
9.5.4.5	Fuel Oil Supply	9.5-13
9.5.5	Diesel-Generator Cooling Water System	9.5-15
9.5.5.1	Design Bases	9.5-15
9.5.5.2	System Description	9.5-15
9.5.5.3	Safety Evaluation	9.5-17
9.5.5.4	Inspection and Testing	9.5-18
9.5.6	Diesel-Generator Starting System	9.5-18
9.5.6.1	System Description	9.5-18

TABLE OF CONTENTS (Cont'd)

		PAGE
9.5.6.2	Safety Evaluation	9.5-22
9.5.6.3	Tests and Inspection	9.5-22
9.5.7	Diesel-Generator Lubrication System	9.5-23
9.5.7.1	System Description	9.5-23
9.5.7.2	Safety Evaluation	9.5-28
9.5.7.3	Tests and Inspections	9.5-29
9.5.8	Diesel-Generator Combustion Air Intake and Exhaust System	9.5-29
9.5.8.1	Design Basis	9.5-29
9.5.8.2	System Description	9.5-29
9.5.8.3	Safety Evaluation	9.5-33
9.5.8.4	Inspection and Testing Requirements	9.5-33
9.5.9	References	9.5-34

CHAPTER 9.0 - AUXILIARY SYSTEMS

LIST OF TABLES

NUMBER	TITLES	PAGE
9.1-1	Spent Fuel Pool Cooling System Design Parameters	9.1-67
9.1-1a	List of Cases Analyzed	9.1-68
9.1-2	Spent Fuel Pool Cooling System Component Design Parameters	9.1-69
9.1-3	Maximum Pool Bulk Temperature Specific Power, q, for the Hottest Assembly	9.1-73
9.1-4	Vaporization Rate from the Instant All Cooling is Lost	9.1-74
9.1-5	Maximum Local Pool Water Temperature and Local Fuel Cladding Temperature at Instant of Maximum Pool Bulk Temperature	9.1-75
9.1-6	Deleted	9.1-76
9.1-7	Heavy Load Handling Systems	9.1-77
9.1-8	Spent Fuel Pool Bridge Crane Pendant Screen Parameters	9.1-78
9.2-1	Essential Service Water Heat Loads	9.2-62
9.2-2	Single-Failure Analysis of the Essential Service Water System	9.2-63
9.2-3	Component Cooling System Design Parameters	9.2-65
9.2-4	Typical/Nominal System Flow Conditions for Main Plant Operating Phases (One Unit)	9.2-67
9.2-5	Component Cooling System Malfunction Analysis	9.2-69
9.2-6	Deleted	9.2-71
9.2-7	Plant Chilled Water System Equipment Parameters	9.2-72
9.2-8	Plant Chilled Water System Failure Analysis	9.2-76
9.2-9	Station Heating System Equipment Parameters	9.2-77
9.2-10	Station Heating System Failure Analysis	9.2-96
9.2-11	Essential Service Water Component Nominal Design Flow Rates	9.2-97
9.2-12	Deleted	9.2-98
9.2-13	Deleted	9.2-99
9.2-14	Suspended Sediment Concentrations (Byron)	9.2-100
9.2-15	Monthly Flows at Intake	9.2-101
9.2-16	Single Failure Analysis of the Ultimate Heat Sink (Byron)	9.2-102
9.3-1	Sampling System Component Design Parameters	9.3-70
9.3-2	Chemical and Volume Control System Design Parameters	9.3-72

LIST OF TABLES (Cont'd)

NUMBER	TITLE	PAGE
9.3-3	Principal Component Data Summary	9.3-74
9.3-4	Principal Component Data Summary	9.3-82
9.3-5	Failure Mode and Effects Analysis Chemical and Volume Control System Active Components - Normal Plant Operation and Load Follow	9.3-86
9.3-6	Maximum Expected Concentrations in Laboratory Samples	9.3-137

LIST OF TABLES (Cont'd)

NUMBER	TITLE	PAGE
9.3-7	Summary of Estimated Integrated Doses 87 ml Diluted Reactor Coolant Sample Procedure	9.3-138
9.4-1	DELETED	
9.4-2	Control Room Heating, Ventilating, and Air Conditioning System Failure Analysis	9.4-79
9.4-3	DELETED	
9.4-4	Radwaste and Remote Shutdown Control Room HVAC System Failure Analysis	9.4-84
9.4-5	DELETED	
9.4-6	Laboratory HVAC System Failure Analysis	9.4-92
9.4-7	DELETED	
9.4-8	Radwaste Building Ventilation System Failure Analysis	9.4-100
9.4-9	DELETED	
9.4-10	Auxiliary Building HVAC System Failure Analysis	9.4-114
9.4-11	DELETED	
9.4-12	Diesel-Generator Facilities Ventilation System Failure Analysis	9.4-117
9.4-13	DELETED	
9.4-14	Miscellaneous Electric Equipment Room Ventilation System Failure Analysis	9.4-120
9.4-15	DELETED	
9.4-16	Switchgear Room Ventilation System Failure Analysis	9.4-126
9.4-17	DELETED	
9.4-18	Pump Houses Ventilation System Failure Analysis	9.4-131
9.4-19	DELETED	
9.4-20	Off-Gas Filter System Failure Analysis	9.4-135
9.4-21	DELETED	
9.4-22	Miscellaneous Tank Vent Filter System Failure Analysis	9.4-138

LIST OF TABLES (Cont'd)

NUMBER	TITLE	PAGE
9.4-23	DELETED	
9.4-24	Primary Containment Ventilation System Failure Analysis	9.4-144
9.4-25	DELETED	
9.4-26	Primary Containment Purge System Failure Analysis	9.4-152
9.4-27	DELETED	
9.4-28	Miscellaneous Ventilation Systems Failure Analysis	9.4-156
9.4-29	DELETED	
9.4-30	Main Steam Pipe Tunnel and Safety Valve Enclosures HVAC System Failure Analysis	9.4-158
9.5-1	Communication Systems	9.5-35
9.5-2	Vital Area Lighting	9.5-38

CHAPTER 9.0 - AUXILIARY SYSTEMS

LIST OF FIGURES

NUMBER	TITLE
9.1-1	New Fuel Rack Installation
9.1-2	Spent Fuel Storage Rack Arrangement
9.1-3	Typical Rack Isometric Region 1
9.1-4	Typical Cell Elevation Region 1
9.1-5	Typical Rack Isometric Region 2
9.1-6	Typical Cell Elevation Region 2
9.1-7	Dynamic Model
9.1-7a	Gap Elements to Simulate Inter-rack Impacts for Model
9.1-7b	Fuel Assembly/Storage Cell Impact Springs for Model
9.1-8	Deleted
9.1-9	Deleted
9.1-9a	Deleted
9.1-10a	Deleted
9.1-10b	Deleted
9.1-10c	Deleted
9.1-10d	Deleted
9.1-11	Deleted
9.1-12	Refueling Machine
9.1-13	Spent Fuel Pool Bridge Crane
9.1-14	New Fuel Elevator
9.1-15	Fuel Transfer System
9.1-16	Spent Fuel Handling Tool
9.1-17	New Fuel Handling Tool
9.1-18	Lifting Rig
9.1-19	Stud Tensioner
9.1-20	Spent Fuel Storage Liner Plan
9.1-21	Spent Fuel Storage Liner Detail
9.1-22	Deleted

LIST OF FIGURES (Cont'd)

NUMBER	TITLE
9.2-1	Deleted
9.2-2	Deleted
9.2-3	Deleted
9.2-4	Deleted
9.2-5	Deleted
9.2-6	Deleted
9.2-7	Heat Rejection to the Ultimate Heat Sink for Two 3411 MWt (Guaranteed Core Thermal Power) PWR Reactors Brought to Cold Shutdown
9.2-8	Ultimate Heat Sink Area Volume (Capacity) Curves (Braidwood)
9.2-9	Heat Sink Temperatures for Maximum Temperature Conditions (Braidwood)
9.2-10	Drawdown for Maximum Temperature Conditions (Braidwood)
9.2-11	Natural Temperatures for Maximum Temperature Conditions (Braidwood)
9.2-12	Heat Temperatures for Maximum Evaporation Conditions (Braidwood)
9.2-13	Drawdown for Maximum Evaporation Conditions (Braidwood)
9.2-14	Natural Temperatures for Maximum Evaporation Conditions (Braidwood)
9.2-15	Deleted
9.2-16	Deleted
9.2-17	Deleted
9.2-18	Deleted
9.2-19	Deleted
9.2-20	Deleted
9.2-21	Deleted
9.2-22	Deleted
9.2-23	Deleted
9.2-24	Deleted
9.2-25	Deleted
9.2-26	Deleted
9.2-27	Deleted
9.2-27a	Deleted

LIST OF FIGURES (Cont'd)

NUMBER	TITLE
9.2-28	Byron River Screen House
9.2-29	Byron RSH Rating Curve for Low Flows
9.2-30	Deleted
9.2-31	Deleted
9.3-1	Deleted
9.3-2	Deleted
9.3-3	Deleted
9.3-4	Deleted
9.3-5	Deleted
9.3-6	Deleted
9.3-7	Deleted
9.3-8	Deleted
9.3-9	Deleted
9.3-10	Sampling Room Shielding Design
9.3-11	High-Rad Liquid Sampling Panel
9.3-12	Grab Sampler and Cap Valve Operator Design
9.3-13	Liquid Sampling Panel Cask Outline
9.4-1	Deleted
9.4-2	Deleted
9.4-3	Deleted
9.4-4	Deleted
9.4-5	Deleted
9.4-6	Deleted
9.4-7	Deleted
9.4-8	Deleted
9.4-9	Deleted
9.4-10	Deleted
9.4-11	Deleted
9.4-12	Deleted
9.4-13	Deleted
9.4-14	Deleted

LIST OF FIGURES (Cont'd)

NUMBER	TITLE
9.5-1	Deleted
9.5-2	Diesel-Generator Cooling Water System (Byron)
9.5-3	Deleted (Byron)
9.5-4	Diesel-Generator Lubrication System (Byron)
9.5-2	Diesel-Generator Cooling Water System (Braidwood)
9.5-3	Diesel-Generator Starting System (Braidwood)
9.5-4	Diesel-Generator Lubrication System (Braidwood)
9.5-5	Deleted
9.5-6	Deleted
9.5-7	Deleted

CHAPTER 9.0 - AUXILIARY SYSTEMS

DRAWINGS CITED IN THIS CHAPTER*

*The listed drawings are included as "General References" only; i.e., refer to the drawings to obtain additional detail or to obtain background information. These drawings are not part of the UFSAR. They are controlled by the Controlled Documents Program.

DRAWING*	SUBJECT
A-703	Plumbing Auxiliary Building Flow Diagram
A-704	Auxiliary Building Plumbing Flow Diagram
A-705	Auxiliary Building Plumbing Flow Diagram
M-6	General Arrangement Main Floor At El. 451'-0" Units 1 & 2
M-7	General Arrangement Mezzanine Floor At El. 426'-0" Units 1 & 2
M-8	General Arrangement Grade Floor At El. 401'-0" Units 1 & 2
M-9	General Arrangement Floor Plan At El. 383'-0" Units 1 & 2
M-10	General Arrangement Basement Floor At El. 364'-0" Units 1 & 2
M-11	General Arrangement Floor Plan At El. 346'-0" Units 1 & 2
M-13	General Arrangement Fuel Handling Building Units 1 & 2
M-15	General Arrangement Section "B-B"
M-20	General Arrangement River Screen House Units 1 & 2
M-39	Diagram of Condensate (Makeup and Overflow) System Unit 1
M-42	Diagram of Essential Service Water System Units 1 & 2
M-42A	Composite Diagram of Essential Service Water System Units 1 & 2
M-43	Diagram of Non-Essential Service Water System Units 1 & 2
M-48-6A, -6B	Diagram of Waste Disposal Auxiliary Building Floor Drains Units 1 & 2
M-48-17	Diagram of Waste Disposal Auxiliary Building Equipment Drains Units 1 & 2
M-48-19	Diagram of Miscellaneous Sumps & Pumps Units 1 & 2
M-48-28	Diagram of Auxiliary Building Leak Detection Sumps Units 1 & 2
M-49	Diagram of Makeup Demineralizer System Units 1 & 2
M-50	Diagram of Diesel Fuel Oil Units 1 & 2
M-54	Diagram of Service Air Units 1 & 2
M-55	Diagram of Instrument Air Units 1 & 2
M-63	Diagram of Spent Fuel Pool Cooling and Cleanup System

DRAWINGS CITED IN THIS CHATER* (Cont'd)

DRAWING*	SUBJECT
M-64	Diagram of Chemical & Volume Control & Boron Thermal Regeneration Unit 1
M-64A	Diagram of Chemical & Volume Control & Boron Thermal Regeneration Unit 1
M-65	Diagram of Boric Acid Processing Units 1 & 2
M-66	Diagram of Component Cooling Water System Units 1 & 2
M-66A	Composite Diagram of Component Cooling Units 1 & 2 (Byron)
M-72	Diagram of Station Heating Units 1 & 2
M-82	Diagram of Auxiliary Building Equipment Drains Units 1 & 2
M-95	Diagram of Auxiliary Building HVAC (VA) System Units 1 & 2
M-96	Diagram of Control Room HVAC System Units 1 & 2
M-97	Diagram of Diesel Generator Room 1A & 1B Ventilation System Unit 1
M-98	Diagram of Diesel Generator Room 2A & 2B Ventilation System Unit 2
M-99-1	Diagram of River Screen House & Circulating Water Pumphouse Ventilation Systems (Byron)
M-99-2	Diagram of River Screen House And Lake Screen House Ventilation Systems Units 1 & 2 (Braidwood)
M-102	Diagram of Laboratory HVAC Systems VL/HRSS Units 1 & 2
M-103	Diagram of Primary Containment Ventilation (VP) System Unit 1
M-104	Diagram of Primary Containment Ventilation (VP) System Unit 2
M-105	Diagram of Containment Purge/Pressurization & Vacuum Relief System (VQ, VP) Unit 1
M-106	Diagram of Containment Purge/Pressurization & Vaccuum Relief System (VQ, VP) Unit 2
M-111	Diagram of Miscellaneous Ventilation Systems (VV) Unit 1
M-112	Diagram of Miscellaneous Ventilation Systems (VV) Unit 2
M-113-1,-2	Diagram of Control Room Offices HVAC (VV) System Units 1 & 2
M-113-3	Diagram of Miscellaneous HVAC Systems Units 1 & 2
M-114	Diagram of Radwaste Building Ventilation System Units 1 & 2
M-115	Diagram of Essential and Non-Essential Switchgear and Miscellaneous Electric Equipment Room Ventilation System Unit 1
M-116	Diagram of Essential and Non-Essential Switchgear and Miscellaneous Electric Equipment Room Ventilation System Unit 2

DRAWINGS CITED IN THIS CHAPTER* (Cont'd)

DRAWING*	SUBJECT
M-117	Radwaste and Remote Shutdown Control Room HVAC (VI) System Diagram Units 1 & 2
M-118-1 to 10	Diagram of Chilled Water System Units 1 & 2
M-119	Diagram of Cooling Towers OA/OB Electrical Substations Ventilation System Units 1 & 2 (Byron)
M-124	Diagram of Condensate (Makeup and Overflow) System Unit 2
M-152-18	Diagram of Starting Air Units 1 & 2 (Byron)
M-364-1	Auxiliary Building Piping Diesel Generator Exhaust Silencer Plan El. 477'-0" Unit 1
M-364-2	Auxiliary Building Piping Diesel Generator Exhaust Silencer Section "A-A" Units 1 & 2
M-425	Turbine Building Piping Plan El. 477'-0" Unit 1
M-900-7 to 9	Outdoor Piping Essential Service Water at Cooling Tower Units 1 & 2 (Byron)
M-906-6	Outdoor Non-Essential and Essential Supply Piping Units 1 & 2
M-906-7	Outdoor Essential Service Water Discharge Piping Units 1 & 2 (Braidwood)
M-907-2	Turbine Building Piping in Substructure Unit 2 (Braidwood)
M-907-3	Auxiliary Building Piping in Substructure Units 1 & 2
NCT-683-4H	Mechanical Cooling Tower General Arrangement Units 1 & 2 (Byron)
NCT-683-14H	General Installation Detail Essential Service Water Cooling Towers Units 1 & 2 (Bryon)
S-259	Essential Service Cooling Tower Drainage Duct Plan, Section & Details (Byron)

CHAPTER 9.0 - AUXILIARY SYSTEMS

9.1 FUEL STORAGE AND HANDLING

The fuel storage and handling system provides a safe, effective means of storing, transporting, and handling fuel from the time it reaches the plant in an unirradiated condition until it leaves the plant after postirradiation cooling. Each unit has its own fuel handling equipment within its containment and an independent fuel transfer mechanism. Other fuel handling equipment used in and around the spent fuel pool is shared.

The system is designed to minimize the possibility of mishandling or of maloperations that could cause fuel damage and potential fission product release.

Refer to Section 9.1.2.3.11 for a description of spent fuel storage and handling using the Dry Cask Storage (DCS) System and the Independent Spent Fuel Storage Installation (ISFSI).

Fuel handling is accomplished by the fuel handling and storage system with a list of the components as follows:

a. containment polar crane;

b. refueling machine;

c. rod control cluster (RCC) changing fixture;

d. portable RCC change tool, thimble plug tool, and burnable poison rod assembly tool;

e. fuel transfer system which consists of two upending devices, transfer carts and transfer tubes;

f. spent fuel bridge crane;

g. fuel handling building crane;

h. new fuel elevator;

i. new and spent fuel storage racks; and

j. fuel rod storage baskets.

During refueling the components interact in the following manner:

The polar crane removes the reactor vessel head and upper internals assembly. The refueling machine transfers fuel from the reactor core to the fuel transfer system and fuel from the fuel transfer system to the reactor core. The RCC Changing Fixture (containment) or the portable RCC change tool is utilized to remove the rod control clusters from the fuel assemblies. Various tools are used in the spent fuel pool to transfer inserts.

The fuel transfer system transfers fuel assemblies between the upending devices in the fuel transfer canal and the refueling cavity in the containment building.

The spent fuel bridge crane transfers fuel between the new fuel elevator, the upending devices, and the spent fuel storage racks.

The new fuel is transferred from the new fuel racks to the new fuel elevator by the fuel handling building crane.

The fuel handling area plan view is shown in Drawing M-13 and in sectional elevation in Drawing M-15.

The spent fuel handling operation is carried out entirely under water.

The new fuel handling operation is also normally carried out under water except during the interval when the new fuel is transferred from the shipping containers to the new fuel storage vault area or new fuel elevator, or possibly during initial core loading.

The fuel handling building which encloses the spent fuel pool, new fuel storage area and portions of the fuel transfer system is a Seismic Category I building. It is therefore capable of withstanding the design-basis earthquakes, tornados, and missiles, and is not subject to flooding. Details of the seismic design are given in Subsection 3.8.4.1.2.

9.1.1 New Fuel Storage

9.1.1.1 Design Bases

New fuel is stored dry in racks designed to provide storage for 132 fuel assemblies. The design of the normally dry new fuel storage racks is such that the effective multiplication factor does not exceed the design-basis limit of 0.98 with fuel of a maximum enrichment of 5.00 wt% U-235 in place, assuming optimum neutron moderation conditions (dry or fogged) in accordance with ANSI N18.2-1973.

The new fuel storage racks are designed to provide storage of a fuel assembly other than where intended, and to withstand the uplift force which could occur due to a fuel assembly hanging up during lifting and the impact load of a dropped fuel assembly.

The new fuel storage facility is designed to prevent flooding. Nevertheless, the new fuel storage racks are designed such that the effective multiplication factor does not exceed 0.95 with fuel of a maximum enrichment of 5.00 wt% U-235 in place, assuming the stored assemblies are completely submerged in unborated water at a conservative water temperature and with no credit for neutron poison in the fuel assembly.

The new fuel storage racks are designed to withstand the safe shutdown earthquake and design-basis wind and tornado loadings. For further information see Subsections 3.2.1, 3.3.1, and 3.3.2.

9.1.1.2 Facilities Description

New fuel assemblies and control rods are received in an area of the fuel handling building separate from other fuel and are stored in racks in the new fuel storage vault after removal from the shipping containers.

New fuel assemblies are stored in racks in a reinforced concrete pit located in the fuel handling building as shown in Drawing M-13. The new fuel storage vault provides dry storage for 132 fuel assemblies which is approximately 2/3 of a core. The new fuel storage installation is shown in Figure 9.1-1. Each rack consists of individual lockable (normally not locked) vertical cells of stainless steel construction. The covers to the new fuel storage vaults are mechanically secured by an electrically-actuated strike during periods of fuel storage with no one in attendance. A group of 44 cells, in rows of two, at a center-to-center spacing of 21 inches is assembled to the support structure. The support structure is bolted and/or welded to embedded studs in the concrete walls and columns of the storage pit. The fuel assembly rests on a self-leveling support plate. All surfaces that contact fuel assemblies are austenitic stainless steel. The supporting structure is high strength carbon steel. The racks are designed to withstand normal operating loads as well as design-basis seismic loads.

The ability to handle off-normal refueling is assured by the quantity of the spent fuel storage racks which can handle 2984 fuel assemblies. Thus the total storage capacity includes 2984 fuel assemblies in the spent fuel pool and 132 new fuel assemblies in the new fuel storage racks.

The new fuel storage racks rest on an 18-inch floor slab with 2-foot thick reinforced concrete walls. Access to the area is through openings in the floor at elevation 426 feet 0 inch. The new fuel storage racks are laterally supported by attachment to embedment plates in the walls.

9.1.1.3 Safety Evaluation

Criticality Control

The design of the new fuel storage racks provides for a subcritical effective multiplication factor (k_{eff}) for the low density optimum moderation condition of less than 0.95 and for the flooded condition of less than 0.95 in accordance with ANSI N18.2-1973 and ANSI N210-1976, respectively. The optimum moderation condition exists when the new fuel racks are covered with clean water at a uniform density of 0.045 gm/cc.

The flooded condition exists when the new fuel racks are covered with cold, clean, unborated water with a full density.

The criticality analyses (Reference 33) of these two conditions included several conservative assumptions as well as the effects of uncertainties in the calculation method, and geometric and material variations of the fuel storage rack. The following conservative assumptions were used in the calculation:

a. Fresh fuel of 5.00 wt% U-235 enrichment - Initially the maximum enrichment will be lower than this, but it could approach this enrichment with an 18-month fuel cycle.

b. Fixed neutron absorbers in the fuel assembly and soluble poison in the water in case of flooding are neglected.

The calculations to determine the optimum moderation condition were performed with a Monte Carlo neutron transport code, KENO, with a 123-group cross section library generated from a basic GAM-THERMOS library using the NITAWL routine in the AMPX code package. The effects of small changes in rack parameters on rack system criticality were determined with KENO. The KENO calculation methods have been benchmarked.

Under the low density optimum moderation condition of 0.045 gm/cc water with full storage racks, the k_{eff} as determined from KENO is 0.7738. Calculational uncertainties were determined from both comparison between calculation and experiments using KENO, and a statistical evaluation of Monte Carlo runs. The results are a calculation uncertainty for the former of 0.0018 Δk and, for the latter, 0.0084 Δk, at a 95% confidence level. The bias method, determined from benchmark critical comparisons, is 0.0083 Δk.

The worst case optimum moderation k_{eff}, which accounts for variations in material composition and mechanical spacing and tolerances, results in a maximum k_{eff} of 0.7907 with a 95% probability at a 95% confidence level, which satisfies the design basis of maintaining k_{eff} below the design-basis limit of 0.95.

When the full new fuel storage racks are flooded with cold unborated water, the nominal k_{eff} is 0.9046. The worst case model, which accounts for variations in material composition and mechanical spacing and tolerances, results in a maximum k_{eff} of 0.9314 with a 95% probability at a 95% confidence level, which satisfies the design basis of maintaining k_{eff} below the design-basis limit of 0.95.

New Fuel Storage Rack Structural Design

In accordance with requirements for seismic design classification, the new fuel storage racks are classified Seismic Category I. Structural integrity of the fuel racks when subjected to design-basis seismic loads has been demonstrated. The loads, load combinations, and structural acceptance criteria (strength limits) that were considered are identical to those considered for the spent and failed fuel storage racks, (Subsection 9.1.2), except that thermal loads were considered negligible and therefore not included.

The seismic loading of the new fuel rack is determined from a response spectrum modal dynamic analysis in which the stiffness of the fuel assembly is neglected. However, the mass of the fuel assemblies is considered to be uniformly distributed along the storage tubes in the north-south and east-west directions. The entire mass of the fuel is assumed to be supported by the floor in the vertical direction. Racks are modeled in detail using finite elements. Since the cans and fuel rest on the floor, a two-dimensional model representing either the upper or lower support system is used for the vertical earthquake. The can is vertically rigid and was analyzed for vertical earthquakes.

The seismic analysis is performed using the STARDYNE computer program. To determine the earthquake response, STARDYNE is first run to determine the natural frequencies and participation factors. For frequencies with significant modal participation, mode shapes and modal loads are calculated using the appropriate response spectra. Closely spaced modes are combined directly and then combined in a square root of the sum of squares (SRSS) manner with other significant modes.

The results of the three directions of earthquake are combined in an SRSS fashion as directed in Combining Modal Responses and Spatial Components in Seismic Response Analysis (Regulatory Guide 1.92).

Using the previously listed loads and load combinations, stresses were calculated at critical sections of the racks. The results of the structural and seismic analyses demonstrate that the fuel racks are structurally adequate and meet the design criteria.

Since rack integrity is maintained there would be no damage to the stored fuel assemblies and no increase in k_{eff} under these loads.

New Fuel Rack Design Features

The new fuel racks were designed and fabricated with a high degree of reliability and integrity.

The codes and standards used for the new fuel racks are listed in subsection 9.1.2.3.10.

9.1.2 Spent Fuel Storage

9.1.2.1 Design Bases

A total of 2984 (Byron only) or 2964 (Braidwood only) fuel storage cells are provided in the spent fuel pool and are arranged in 24 distinct modules (racks) of varying sizes in two regions. The number of cells provided maximizes the use of the space available in the spent fuel storage pool considering various factors such as the layout restrictions, structural capacity of the pool, criticality and thermal-hydraulic limitations, etc.

These high density spent fuel racks are designed to ensure that the neutron multiplication factor (k_{eff}) is less than 0.95 with the racks fully loaded with fuel assemblies of the highest anticipated reactivity in each of two regions, and flooded with unborated water.

For spent fuel storage consideration, the design basis fuel assembly is a 17 x 17 Westinghouse optimized fuel assembly containing UO_2 at a maximum initial enrichment of 5.0% U-235 by weight. There is no significant difference in criticality expected between the optimized fuel assembly, standard fuel assembly, VANTAGE 5 assembly, VANTAGE+ assembly, or Performance+ fuel assembly. The optimized fuel assembly is slightly more reactive than the standard, VANTAGE 5, VANTAGE+, or Performance+ assemblies and will bound criticality results from these fuel assemblies. Two separate storage regions are provided in the spent fuel storage pool, with separate criteria defining the highest anticipated reactivity in each of the two regions as follows:

Region 1 can accommodate storage of fuel assemblies with a nominal initial enrichment of ≤ 5.0 weight percent U-235.

The fuel assemblies are placed in Region 1 such that a nominal 10.888 inch north-south and 10.574 inch east-west, center-to-center distance is maintained between fuel assemblies.

Region 2 can accommodate storage of fuel assemblies in any cell for fuel assemblies with a nominal initial enrichment of ≤ 5.0 weight percent U-235 with minimum discharge burnups as specified in Figure 7.1 of Reference 39.

The fuel assemblies are placed in Region 2 such that a nominal 8.97 inch center-to-center distance is maintained between fuel assemblies.

The spent fuel racks were designed to allow adequate cooling of the spent fuel assemblies. The spent fuel racks are classified Seismic Category I. They are designed to withstand the effects of the SSE, remain functional and maintain subcriticality.

The spent fuel racks were designed to withstand either a dropped fuel assembly or the upward force of a stuck assembly without loss of function. The structural analysis is discussed later in this section.

Shielding for the spent fuel storage arrangement is sufficient to protect plant personnel from exposure and to maintain doses as low as reasonably achievable and well below 10 CFR 20 limits.

The spent fuel storage facility was designed to prevent tornado-generated missiles from causing damage to the fuel.

Spent fuel may also be stored in Dry Cask Storage (DCS) system discussed in Section 9.1.2.3.11.

9.1.2.2 Facilities Description

Spent Fuel Storage Racks

The spent fuel storage racks provide a place in the spent fuel storage pool for storing the spent fuel discharged from the reactor vessel. They are top entry racks, designed to preclude the possibility of criticality under both normal and abnormal conditions.

The design of the spent fuel storage rack assembly prevents any possibility of accidental criticality. The location of the spent fuel pool within the plant is shown in Drawing M-13. A general arrangement of spent fuel storage facilities for Byron and Braidwood is shown in Figure 9.1-2.

A total of 396 storage cells are provided in 4 racks in Region 1, which is designed for storage of fuel assemblies as described above.

A total of 2588 (Byron only) or 2568 (Braidwood only) storage cells are provided in 20 racks in Region 2. The Region 2 cells are capable of accommodating fuel assemblies with various initial enrichments with accumulated minimum burnup.

As shown in Figure 9.1-2, there are 24 discrete rack modules arranged in the fuel pool. The racks are freestanding and self-supporting. The racks are shown in Figures 9.1-3 and 9.1-5. The nominal gap between cell walls of adjacent Region 1 modules and between Region 1 and Region 2 modules is 1-3/4 inches; the nominal gap between adjacent Region 2 modules is 1 inch. The modules make surface contact between contiguous sides at the baseplate and thus maintain a specified gap between them.

Text on this page has been intentionally deleted.

Region 1 Racks

The rack module is fabricated from ASME SA240-304L austenitic stainless steel sheet and plate material and ASME SA564-630 stainless steel bar material. The weld filler material utilized in body welds is ASME SFA-5.9, Types 308L and 308LSI. Boral serves as the neutron absorber material.

A typical module contains storage cells, which have an 8.82-inch nominal square cross-sectional opening. This dimension ensures that fuel assemblies with maximum expected axial bow can be inserted and removed from the storage cells without any damage to the fuel assemblies or the rack modules. Figure 9.1-4 shows a partial vertical section of a Region 1 module.

The cells provide a smooth and continuous surface for lateral contact with the fuel assembly. The rack module components are as follows:

a. Internal Square Box

   This element provides the lateral bearing surface to the fuel assembly. It is fabricated by joining two formed channels using a controlled seam welding operation. This element has an 8.82-inch square internal cross-section and is 167 inches long.

b. Neutron Absorber Material (Boral)

   Boral is placed on all four sides of a square tube over a length of 147 inches.

c. Poison Sheathing

The poison sheathing (cover plate) serves to position and retain the poison material in its designated space. This is accomplished by spot welding the cover sheet to the square tube along the former's edges at numerous (at least 19) locations. This manner of attachment ensures that the poison material will not sag or laterally displace during fabrication processes and under any subsequent loading conditions.

d. Gap Element

Gap elements position two inner boxes at a predetermined distance to maintain the minimum flux trap gap required between two boxes. The gap element is welded to the inner box by fillet welds. An array of composite box assemblies forms the honeycomb gridwork of cells which harnesses the structural strength of all sheet and plate type members in an efficient manner. The array of composite boxes has overall bending, torsional, and axial rigidities which are an order of magnitude greater than configurations utilizing a grid bar type of construction.

e. Baseplate

The baseplate is a 3/4-inch thick plate type member which has 4-1/2 inch diameter holes concentrically located with respect to the internal square tube, except at the four lift locations where a 5-1/8 inch by 2-5/8 inch rectangular cut-out overlaps a 3-1/8 diameter hole. These holes provide the primary path for coolant flow. Secondary flow paths are available between adjacent cells via the lateral flow holes (3/4-inch in diameter) near the root of the honeycomb (Figures 9.1-4 and 9.1-6) which preclude flow blockages. The honeycomb is welded to the baseplate with 1/16-inch fillet welds.

f. Support Assembly

Each module has at least four support legs. All supports are adjustable in length to enable leveling of the rack. The variable height support assembly consists of a flat-footed spindle, which rides into an internally threaded rectangular member. The rectangular member is attached to the underside of the baseplate through fillet welds. The base of the flat-footed spindle sits on the pool floor on shim plates and bearing pads that distribute floor loading.

Leveling of the rack modules is accomplished by turning the square sprocket in the spindle using a long arm (approximately 46 feet long) square head wrench.

The supports elevate the module baseplate approximately 14 inches above the pool floor, thus creating the water plenum for coolant flow. The lateral holes in the spindle provide the coolant entry path leading into the bottom of the storage locations.

g. Top Leadin

At Braidwood, leadins are provided on each cell to facilitate fuel assembly insertion.

Region 2 Racks

The rack modules in Region 2 are fabricated from the same material as that used for Region 1 modules. A typical Region 2 module storage cell has an 8.75-inch nominal square cross-sectional opening. Figure 9.1-6 shows a partial vertical section of a Region 2 module. The rack construction varies from that for Region 1 as the stainless steel gap elements are eliminated. Hence, the basic components of this design are as follows:

a. Internal square box,

b. Neutron absorber material,

c. Poison sheathing,

d. Baseplate, and

e. Support assembly.

In this construction, two channel elements form a box with an 8.75-inch nominal square cross-sectional opening. The poison material (Boral, 147 inches in length) is placed on all four sides of a square tube. Poison sheathing (cover plate) is spot welded to the square tube to position and retain the poison material in its designated place. Adjacent boxes are welded together to form the honeycomb rack module. The baseplate and adjustable support assemblies are incorporated in exactly the same manner as described for the Region 1 racks.

Fuel Rod Storage Baskets

The fuel rod storage baskets are designed to accommodate individual spent and/or fresh fuel rods in a fixed array of stainless steel tubes. The spacing of the fuel racks and fuel rod storage baskets is designed so as to ensure the reactivity of the fuel rod storage baskets are less than fuel assemblies with the same enrichments as the most limiting fuel rod in the fuel rod storage basket. The fuel rod storage baskets are intended to be used for storage of fuel rods removed from fuel assemblies during reconstitution and are handled and stored just like a fuel assembly.

Spent Fuel Storage Pool

The spent fuel storage pool is designed for the underwater storage of spent fuel assemblies and control rods after their removal from the reactor. The pool depth is such that an administrative limit surface dose level due to spent fuel alone will be less than or equal to 4 mrem/hr above background when moving a fuel assembly over storage racks. It is designed to accommodate a total of 2984 fuel assemblies. The spent fuel pool general arrangements are shown in Drawings M-13 and M-15.

Spent fuel assemblies are handled by a spent fuel handling tool suspended from an overhead monorail underhung electric hoist and manipulated by an operator standing on a movable bridge over the pool. The spent fuel storage pool and transfer canal are constructed of structural reinforced concrete and lined with stainless steel.

A new fuel elevator is located in the pool to allow transferring new fuel assemblies into the pool for subsequent handling with the spent fuel pool bridge crane. The new fuel elevator may be used for fuel repair requiring irradiated fuel to be placed in the basket. The elevator is equipped with alarms to inform the operator when a fuel assembly is placed in the basket. All parts in contact with the pool water are stainless steel. This elevator is structurally designed as Seismic Category II. A separate, walled-off area is provided at the end of the pool for storing spent fuel casks. The cask storage area is provided with leaktight gates to allow isolation from the pool.

Figure 15.7-1 shows the general arrangement of the fuel handling building and the route for the cask to move the spent fuel.

The fuel handling building crane is designed so that travel of the crane will be restricted to ensure that heavy loads are not carried over the spent

fuel storage racks.

The 125-ton main hoist load block is considered a heavy load, but because the upgraded load block is supported by four redundant wire ropes, and the maximum load on each wire rope with the maximum critical load attached does not exceed 10% of the manufacturer's published breaking strength, which is much greater than the weight of the main hoist load block, travel over the spent fuel pool is permitted. Since the crane is required, on occasion, to travel over the spent fuel pool for cask movement and refueling operations (new fuel elevator), the electrical interlocks need to be defeated. Therefore, when the crane does need to travel over the spent fuel pool, the interlocks may be bypassed and the hoist selector switch will be placed in the "Aux Hoist" position per procedure to prevent inadvertent lowering of the main hoist.

The 125-ton main hoist meets the single-failure proof requirements of NUREG-0554, and ASME NOG-1-2004.

Figure 15.7-1 shows the main hook's limit of travel with a heavy load.

The crane interlocks, administrative controls (specifically compliance with NUREG-0612), and structures are provided to prevent movement of the cask over the fuel storage areas, and provide added assurance that the integrity of the new fuel and spent fuel will not be compromised.

The existing removable mechanical stops prohibit movement of the bridge onto the crane rail extension sections along the Spent Fuel Pool west of Column Line X at Braidwood and east of Column X at Byron.

The spent fuel pool bridge crane hoists are equipped with a load-limiting interlock to prevent lifting a load heavier than 4000 pounds. If the load is in excess of this weight, the electrical interlock will stop the spent fuel pool bridge hoist drive from moving upward.

The design requirements for the separating wall between the fuel cask pit and the spent fuel pool are:

a. Walls are designed to withstand increased water pressure which may be caused by a vertical drop of the cask. The walls were also reevaluated and found adequate to withstand the impact loads from the racks adjacent to the cask pit during a seismic event. The wall thickness is 2 feet-6 inches.

b. For a cask drop on the exterior pool wall, the wing wall will be allowed to deform locally beyond its elastic limit, but it has been shown that the cask will not fall outside the cask storage well and thus will not affect the fuel in the fuel storage pool.

c. Since the cask will always be brought to the pool so as to enter the storage well without passing over the pool, there is no possibility of cask drop into the fuel storage pool.

d. The spent fuel pool floor is 6-foot thick reinforced concrete resting directly on bedrock (Byron) or on soil (Braidwood) and is designed for a vertical drop of the cask in the storage well.

e. Gates are provided to transfer fuel from the pool to the spent fuel cask pit.

9.1.2.3 Safety Evaluation

9.1.2.3.1 Criticality Control

The design basis for preventing criticality outside the reactor is that, including uncertainties and biases, there is a 95-percent probability at a 95-percent confidence level that the effective neutron multiplication factor (95/95 k_{eff}) of the fuel assembly array will be less than or equal to 0.95 as recommended by ANSI 57.2-1983 and NRC guidelines (Reference 1).

The high density spent fuel storage racks are designed to ensure that the 95/95 k_{eff} is less than or equal to 0.95 with the racks fully loaded with fuel assemblies of the highest anticipated reactivity in each of two unique storage regions. The storage pool is assumed to contain clean, un-borated water at the maximum possible water density (4°C).

The design of the rack prevents criticality of fuel assemblies in a fuel storage rack by limiting fuel assembly interaction. This is accomplished by fixing the minimum separation between fuel assemblies and inserting neutron absorber material between the assemblies.

The criticality analysis of the two spent fuel pool storage regions in each plant produced the following criteria defining the fuel storage design limits based on maintaining the 95/95 k_{eff} less than or equal to 0.95 in each region. The criteria for storage in each region are provided in Subsection 9.1.2.1.

The current criticality analysis of record has been evaluated for the use of eight AREVA Lead Use Assemblies (LUAs) at Braidwood Unit 1. The LUAs have a lower reactivity than resident Westinghouse fuel of the same enrichment at the beginning of life. With burnup though, this difference diminishes and eventually the LUAs have a higher reactivity. The burnup at which this occurs is a function of initial enrichment. The evaluation determined that there is enough reactivity margin in the analysis of record to offset the higher LUA reactivity. The criteria for storage in Region 1 and Region 2, provided in Subsection 9.1.2.1, remain applicable for the AREVA LUAs planned for use in Braidwood Unit 1 Cycles 15 through 17.

9.1.2.3.2 Criticality Design Computer Codes

The computer codes used were, (1) MCNP4a (Reference 40), (2) KENO5a (References 41 and 42), and (3) CASMO4 (References 43 and 44). MCNP4a is a three-dimensional Monte Carlo code, using continuous energy cross-sections. KENO5a is also a three-dimensional Monte Carlo code using the 238-group cross-section library developed by Oak Ridge National Laboratory. CELLDAN (a proprietary code developed by Holtec International) and NITAWL II (from the SCALE 4.3 package) were used to process input data and to develop self-shielded cross-sections for the U-238 resonances using the Nordheim integral treatment. MCNP4a and KENO5a were run with a sufficient number of histories to assure convergence (usually 1 million or more histories).

Neither MCNP4a or KENO5a have the capability for performing depletion calculations, and CASMO4, a two-dimensional transport theory code based on capture probabilities, was used for this purpose.

In support of the criticality safety calculations for the spent fuel storage racks, a set of 56 critical experiments were analyzed to provide a definitive determination of the methodology bias. These critical experiments included materials, compositions, and geometries that spanned the values used in the spent fuel rack design. The calculated bias and uncertainty determined from these benchmark calculations are 0.0009 ± 0.0011 and 0.0030 ± 0.0012 for MCNP4a and CELLDAN-NITAWL II-KENO5a respectively.

Reactivity uncertainties and effect of temperature/void for the storage racks were determined with the CASMO4 code, by computing the incremental Δk associated with each parameter. These Δk tolerance effects were combined statistically to determine the maximum uncertainty due to manufacturing tolerances.

The temperature and void coefficients of reactivity were determined to be negative and the analysis basis temperature associated with the maximum possible water density was taken to be 4° C.

9.1.2.3.3 Reactivity Equivalencing for IFBA in Region 1 and Burnup/Decay Time Credit in Region 2

No credit for IFBA rods or for shutdown decay time was taken for fuel storage in the spent fuel racks for fuel of 5% enrichment. Neglecting these factors is very conservative and their inclusion would yield a larger subcriticality margin. Neither MCNP4a nor KENO5a have the capability for performing depletion calculations. In Region 2, the standard methodology of determining the equivalent enrichment for equal reactivity in a series of CASMO4 calculations was used to enable calculations to be performed with MCNP4a and KENO5a.

The CASMO4 code was used for the spent fuel racks, to generate the enrichment-burnup dependency and to evaluate the reactivity uncertainties associated with manufacturing tolerances. No credit was taken for the presence of IFBA rods or for reactivity decrease following removal of fuel from the reactor core. Credit for soluble boron in the pool water was taken only for accident conditions as permitted by NRC guidelines. An allowance for uncertainty in depletion calculations was based on 5% of the reactivity decrement from beginning of life.

Text on this page has been intentionally deleted.

Text on this page has been intentionally deleted.

9.1.2.3.4 Criticality Fuel Design Parameters

The pertinent fuel parameters used in the criticality analysis for both Byron and Braidwood are obtained from the Westinghouse 17 x 17 OFA, VANTAGE 5 and VANTAGE+ fuel assemblies, which contain nominal enrichments up to 5.0% U-235 by weight over the entire length of each fuel rod. There is no significant difference in criticality expected between the OFA, VANTAGE 5 or VANTAGE+ assemblies. The OFA is slightly more reactive than the other 17 x 17 Westinghouse fuel assemblies and bounds their reactivity results.

9.1.2.3.5 Soluble Boron Requirements

Criticality safety analyses were made for assumed accident conditions in the pool, in which a fresh 5% enriched fuel assembly is assumed to be inadvertently loaded outside and immediately adjacent to a storage module. In Region 1, it was determined that a minimum soluble boron concentration of ~212 ppm is necessary to assure that the maximum k-effective is maintained less than 0.95. The corresponding soluble boron concentration in Region 2 for the same accident scenario is ~120 ppm.

9.1.2.3.6 Reactivity Effect of Axial Distribution in Burnup

During fuel burnup, the ends of the fuel assemblies have a lower burnup (and hence a higher reactivity) than the assembly average. The effect of this axial distribution in burnup is a positive reactivity penalty above a burnup of ~30,000 MWD/MTU. Calculations for fuel assemblies of 40,000 MWD/MTU in Region 2 racks resulted in a reactivity average of 0.0086 Δk which is added to the calculated k-effective in determining the limiting k-effective of the racks.

9.1.2.3.7 Fuel Storage Rack Structural Design

In accordance with the spent fuel storage facility design bases and the requirements for seismic design classification, the spent fuel storage racks are designed as Seismic Category I. Structural integrity of the racks when subjected to normal, abnormal, and seismic loads was demonstrated.

The stress limits for various conditions discussed in item b. below are associated with physical properties of rack and support materials based on a maximum pool bulk temperature of 200 °F (reference design temperature for evaluation of material properties).

There are two sets of criteria to be satisfied by the rack modules:

a. Kinematic Criterion

This criterion seeks to ensure that the rack is a physically stable structure. The racks are designed to sustain certain inter-rack impact at designated locations in the rack modules. Therefore, physical stability of the rack is considered along with the localized inter-rack impacts. Localized permanent deformation of the module is permissible, so long as the subcriticality of the stored fuel array is not violated.

b. Stress Limits

The stress limits of the ASME Code, Section III, Subsection NF, 1983 Edition are used since this code provides the most appropriate and consistent set of limits for various stress types and various loading conditions. The following loading combinations are applicable (Reference 20):

Loading Combination	Stress Limit
$D + L$ $D + L + T_o$ $D + L + T_o + E$	Level A service limits
$D + L + T_a + E$ $D + L + T_o + P_f$	Level B service limits
$D + L + T_a + E'$ $D + L + F_d$	Level D service limits The functional capability of the fuel racks should be demonstrated.

where:

D	=	Dead weight-induced stresses (including fuel assembly weight)
L	=	Live Load (O for the structure, since there are no moving objects in the rack load path).
F_d	=	Force caused by the accidental drop of the heaviest load from the maximum possible height.
P_f	=	Upward force on the racks caused by postulated stuck fuel assembly
E	=	Operating Basis Earthquake
E'	=	Safe Shutdown Earthquake
T_o	=	Differential temperature induced loads (normal or upset condition)
T_a	=	Differential temperature induced loads (abnormal design conditions)

The conditions T_a and T_o cause local thermal stresses to be produced. The worst situation will be obtained when an isolated storage location has a fuel assembly which is generating heat at the maximum postulated rate and the surrounding storage locations are assumed to contain no fuel. The heated water makes unobstructed contact with the inside of the storage walls, thereby producing the maximum possible temperature difference between the adjacent cells. The secondary stresses thus produced are limited to the body of the rack; that is, the support legs do not experience the secondary (thermal) stresses.

The high density spent fuel racks were analyzed to determine that these stress limits are not exceeded.

9.1.2.3.8 Seismic Analysis

The method of analysis employed is the time-history method. Three statistically independent, orthogonal time histories were applied simultaneously to determine the structural response (stresses, deformation, rigid body motion, etc.). The acceleration time histories were generated from the response spectra at the spent fuel pool floor. The seismic analysis is performed in three steps, namely:

1. Development of a nonlinear dynamic model consisting of inertial mass elements and gap and friction elements.

2. Generation of the equations of motion and inertial coupling and solution of the equations using the "component element time integration scheme" (References 22 and 23) to determine nodal forces and displacements.

3. Computation of the detailed stress field in the rack (at the critical location) and in the support legs using the nodal forces calculated in the previous step. These stresses are checked against the design limits.

Since the racks are not anchored to the pool slab or attached to the pool walls or to each other, they can execute a wide variety of rigid body motions. For example, the rack may slide on the pool floor (so-called "sliding condition"); one or more legs may momentarily lose contact with the liner ("tipping condition"); or the rack may experience a combination of sliding and tipping conditions. In addition, impact may occur between the racks or between the fuel assemblies and racks. All these nonlinearities were considered in modeling the racks. Following is the brief description of the three-dimensional nonlinear dynamic model of a single rack.

a. The fuel rack structure is a folded metal plate assemblage welded to a baseplate and supported on four legs. The movement of the rack cross-section at any height is described in terms of the twelve degrees-of-freedom (6 at the base of the rack, 6 at the top of the rack). The rattling fuel is modeled by five lumped masses located at H,

.75H, .5H, .25H, and at the rack base. Fuel mass connectivity is included to model the fuel assembly stiffness.

b. The seismic motion of a fuel rack is characterized by random rattling of fuel assemblies in their individual storage locations. Assuming that all assemblies vibrate in phase obviously exaggerates the computed dynamic loading on the rack structure. This assumption, however, greatly reduces the required degrees-of-freedom needed to model the fuel assemblies which are represented by five lumped masses located at different levels of the rack. The centroid of each fuel assembly mass can be located, relative to the rack structure centroid at that level, so as to simulate a partially loaded rack.

c. The local flexibility of the rack-support interface is modeled conservatively in the analysis.

d. The rack base support may slide or lift off the pool floor.

e. The pool floor has a specified time-history of seismic accelerations along the three orthogonal directions.

f. Fluid coupling between rack and fuel assemblies, and between rack and adjacent racks, is simulated by introducing appropriate inertial coupling into the system kinetic energy. Inclusion of these effects uses the methods of References 23 and 24 for rack/fuel assembly coupling and for rack/rack coupling.

g. Potential impacts between rack and fuel assemblies are accounted for by appropriate "compression only" gap elements between masses involved. All elements of the fuel assemblies are assumed to move in phase. This will provide maximum impact force level.

h. Fluid damping between rack and fuel assemblies, and between rack and adjacent rack, is conservatively neglected.

i. The supports are modeled as "compression only" elements for the vertical direction and as "rigid links" for dynamic analysis. The bottom of a support leg is attached to a frictional spring. The cross-section inertial properties of the support legs are computed and used in the final computations to determine support leg stresses.

j. The effect of sloshing can be shown to be negligible at the bottom of a pool and is hence neglected.

k. Inter-rack impact, if it occurs, is simulated by a series of gap elements at the top and bottom of the rack in the two horizontal directions. The most conservative case of adjacent rack movement is assumed; each adjacent rack is assumed to move completely out of phase with the rack being analyzed. The effect of a misalignment is also considered.

l. The form drag opposing the motion of the fuel assemblies in the storage locations is conservatively neglected.

m. The form drag opposing the motion of the fuel rack in the water is also conservatively neglected.

Figure 9.1-7 shows a schematic of the model. Twelve degrees-of-freedom are used to track the motion of the rack structure. Figures 9.1-7a and 9.1-7b, respectively, show the inter-rack impact springs and fuel assembly/storage cell impact springs at a particular level.

There are some factors which may affect the analysis. For instance, a particular rack may be completely loaded with fuel assemblies (which corresponds to greatest rack inertia), or it may be completely empty. The coefficient of friction, μ between the supports and pool floor is another indeterminate factor. According to Rabinowicz (Ref. 21) the results of 199 tests performed on austenitic stainless steel plates submerged in water show a mean value of μ to be 0.503 with a standard deviation of 0.125. The upper and lower bounds (based on twice the standard deviation) are thus 0.753 and 0.253, respectively. Two separate analyses are performed for the rack assemblies with values of the coefficient of friction equal to 0.2 (lower limit) and 0.8 (upper limit), respectively. Analyses performed for the geometrically limiting rack modules focus on limiting values of the coefficient of friction, and the number of fuel assemblies stored.

Cases studied are for the 14x10 rack and for the 11x9 rack. Typical simulations are:

- Fully loaded rack (all storage locations occupied), μ = 0.8; 0.2 (μ - coefficient of friction)
- Rack half full, μ = 0.8; 0.2
- Rack nearly empty (less than 10% of storage locations occupied), μ = 0.8; 0.2

These simulations are repeated for the SSE and OBE seismic events.

Another significant factor which will affect the analysis is the so called "fluid coupling effect". If one body of mass vibrates adjacent to another body, and both bodies are submerged in a frictionless fluid medium, the effect of the fluid is to add a certain amount of mass to the body and an external force which is proportional to the acceleration of the adjacent body. Thus, the acceleration of one body affects the force field on another. This force is a strong function of the interbody gap, reaching large values for very small gaps. This inertial coupling is called fluid coupling. The lateral motion of a fuel assembly inside the storage location will encounter this effect. So will the motion of a rack adjacent to another rack. These effects are included in the equations of motion. Furthermore, the rack equations contain coupling terms which model the effect of fluid in the gaps between adjacent racks. The coupling terms modeling the effects of fluid flowing between adjacent racks are computed assuming that all adjacent racks are vibrating 180° out of phase from the rack being analyzed. Therefore, only one rack is considered surrounded by a hydrodynamic mass computed as if there were a plane of symmetry located in the middle of the gap region.

The fluid virtual mass is also included in the vertical direction vibration equations of the rack; virtual inertia is also added to the governing equation corresponding to the rotational degree-of-freedom.

In reality, damping of the rack motion arises from material hysteresis (material damping), relative intercomponent motion in structures (structural damping), and fluid drag effects (fluid damping). In the analysis, a maximum of 4% structural damping is imposed on elements of the rack structure during SSE seismic simulations. Material and fluid damping are conservatively neglected.

The analysis is carried out using the computer code "DYNARACK" which is based on numerical step by step integration method using a central difference scheme. Stresses in various portions of the structure are computed from known element forces at each instant of time.

In addition to the above three dimensional “single rack” analysis, a series of three dimensional multi-rack dynamic analyses was performed to evaluate the impact effect of "multiple rack" behavior under seismic loading conditions. The model includes all twenty-four rack modules in the spent fuel pool. Each individual rack model is identical to the model used in the "single rack" analysis (see Figure 9.1-7). Three different coefficients of friction (μ = 0.8; 0.2; Gaussian distribution with a mean of 0.5 and upper and lower limits of 0.8 and 0.2) are examined. The multi-rack analysis was carried out using the computer code "MR216" (a.k.a. "DYNARACK"). The results were compared with the single rack analysis to ensure structural integrity of the high density spent fuel racks.

Both the Region 1 and Region 2 racks, when they are completely empty of fuel, are also capable of supporting miscellaneous equipment (e.g., tools) directly on top of the storage cells. The object must weigh less than 2,000 lb (dry), and it must span a minimum of three storage cells.

When performing fuel maintenance activities, up to one fuel assembly may occupy a rack supporting maintenance equipment provided greater than 50% of the total cell exit flow area containing the fuel assembly is unrestricted.

9.1.2.3.9 Accident Analysis

The mathematical model constructed to determine the impact velocity of falling objects is based on several conservative assumptions, as follows:

1. The virtual mass (see Reference 24-26 for further material on this subject) of the body is conservatively assumed to be equal to its displaced fluid mass. Evidence in the literature (Reference 27), indicates that the virtual mass can be many times higher.

2. The minimum frontal area is used for evaluating the drag coefficient.

3. The drag coefficients utilized in the analysis are the lower bound values reported in the literature (Reference 28). In particular, at the beginning of the fall when the velocity of the body is small, the corresponding Reynolds number is low, resulting in a large drag coefficient.

4. The falling bodies are assumed to be rigid for the purposes of impact stress calculations on the rack. The solution of the immersed body motion problem is found analytically. The impact velocity thus computed is used to determine the maximum stress generated due to stress wave propagation.

With this model, the following analyses are performed:

1. Dropped Fuel Accident I

   A fuel assembly (weight = 2300 pounds) is dropped from 36 inches above the module and impacts the baseplate. The final velocity of the dropped fuel assembly (just prior to impact) is calculated and, thus, the total energy at impact is known. The baseplate is adequate to absorb this impact energy by local deformation. Therefore, it is concluded that local punching of the baseplate will not occur. Direct impact with the pool liner does not occur and the subcriticality of the adjacent fuel assemblies is not violated.

2. Dropped Fuel Accident II

   One fuel assembly drops from 36 inches above the rack and hits the top of the rack. Permanent deformation of the rack is found to be limited to the top region such that the rack cross-sectional geometry at the level of the top of the active fuel (and below) is not altered.

The region of local permanent deformation does not extend below 17 inches from the rack top. A finite element approach is used to obtain this result.

3. Jammed Fuel-Handling Equipment

A 4400-pound uplift force is applied at the top of the rack at the "weakest" storage location; the force is assumed to be applied on one wall of the storage cell boundary as an upward shear force. The plastic deformation is found to be limited to the region well above the top of the active fuel.

The spent fuel racks have been evaluated against Appendix D to SRP 3.8.4, "Technical Position on Spent Fuel Pool Racks." The spent fuel racks comply with this position with the following exception:

The cask drop has not been considered in the design of fuel pool because electrical interlocks have been provided to prevent the fuel handling building crane from operating in this area. As stated in Subsection 9.1.2.2, the cask will not fall outside the cask storage area. Figure 9.1-20 shows the spent fuel storage pool liner plan and Figure 9.1-21 shows the liner details.

Using the previously listed loads and load combinations, stresses are calculated at critical sections of the racks. The results of the structural and seismic analyses demonstrate that the fuel racks are structurally adequate and meet the design criteria. Since rack integrity is maintained, no damage to stored assemblies and no increase in k_{eff} would occur under these loads.

9.1.2.3.10 Fuel Rack Design Features

The high density spent fuel storage racks are all stainless steel, as is the spent fuel pool liner, to minimize the potential for galvanic corrosion. Stainless steel has also been shown to be compatible with spent fuel pool water and the stored assemblies. The fuel rack base is elevated above the floor to assure adequate flow under the rack in each fuel assembly. Analyses have been performed to calculate the maximum fuel cladding temperature.

Refueling operations are routinely performed in either an approximate one-third core offload, or a full core temporary offload where approximately two-thirds of the fuel assemblies are returned to the reactor vessel, along with the new fuel, prior to the end of the outage. A third refueling mode, dual-unit discharge, would be an abnormal circumstance, but is also considered in the analysis.

The three cases are designated as:

1. Normal refueling discharge - 1/3 of the reactor core.
2. Full core discharge
3. Normal discharge from one unit followed 17 days later by a full core discharge from the other unit.

In order to determine an upperbound on the maximum fuel cladding temperature, the following conservative assumptions were made:

a. The fuel pool will contain spent fuel with varying time-after-shutdown (τ_s). Since the heat emission falls off rapidly with increasing τ_s, it is obviously conservative to assume that all fuel assemblies are fresh (τ_s = 100 hours) and they all have had 4.5 years of operating time (i.e., 1642 Effective Full Power Days) in the reactor for cases 1 and 2.

b. The downcomer space around the rack module group varies, as shown in Figure 9.1-2. A two-inch wide downcomer gap is assumed to conservatively minimize the downcomer flow area.

c. No downcomer flow is assumed to exist between the rack modules.

d. The upperbound on the temperature in a typical cell is calculated at the most heat emissive fuel assembly location.

e. A hot assembly radial peaking factor of 1.70 is applied to the core average assembly energy release rate. A total peaking factor of 2.60 is applied for the fuel assembly decay heat and maximum local peak heat flux evaluation.

f. The peak heat emission is conservatively assumed to occur at the top where the local water temperature also reaches its maximum.

g. No credit is taken for axial conduction of heat along the fuel rod.

Table 9.1-5 gives the maximum local cladding temperature at the instant the pool bulk temperature has attained its maximum value.

Other Spent Fuel Storage Facility Design Features

The Byron/Braidwood stainless steel spent fuel pool, fuel transfer canal and cask pit liners were originally designed and constructed to Category I requirements. Weld inspections conducted subsequent to the initial acceptance of the Byron liner did not confirm the acceptability of those welds to Category I standards. The liners at both plants were therefore reclassified in April 1983 to Category II structures. Because they meet the additional criteria of NUREG-0800, Revision 3, July 1981, the liners for the spent fuel pool, fuel transfer canal, and spent fuel cask pit do not need to be designed and erected to Category I requirements. Long-term benefits in terms of reduced record keeping and surveillance requirements also result from this action without degrading safety.

The design of the liner is such that the design thermal stresses are much larger than the design seismic (SSE) stresses. Because of this fact, and because the liner was originally designed and constructed as a Category I structure, gross failure of the liner as a result of a seismic event is not considered to be credible. Thus, neither mechanical damage to fuel nor flow blockage of spent fuel in the spent fuel racks as a result of liner failure are considered to be credible events.

A failure of the liner which allows leakage of the pool water past the liner (such as the rupture of a seam) as a result of a seismic event would not have any adverse effects on fuel in the pool or on any safety-related equipment in the plant. Five 1-1/2 inch drains are provided behind the spent fuel pool liner. The drain piping is embedded in the concrete structure up to column-row W, where it joins the auxiliary building floor drain system. At the point where the drain piping emerges from the concrete wall, five valves and sight glasses (one per drain line) are provided. Any leakage past the liner would be collected by the drain piping and would become visible in the sight glasses. No other liner leakage paths exist. The Spent Fuel Pool low level alarm would initiate appropriate follow-up action to close the valves and stop the leak. Spent fuel pool leakage due to a failed gate seal is addressed in Subsection 9.1.3.3. The auxiliary building floor drain piping is seismically supported, so failure of this piping as a result

of an SSE is not postulated. Thus, failure of the liner would not result in loss of significant quantities of pool water, and no safety-related equipment would be affected by any resulting leakage.

An additional discussion of liner plate design and construction details follows.

Continuous embedded plates (2 inch by 3/8 inch ASTM A36 with 5/8-inch diameter Nelson studs) were placed in the concrete pool walls in an approximate 6 foot 0 inch grid pattern. Embedded wide flanges (with W4x13 = 4 inch deep x 13 lb/ft ASTM A36 with 5/8-inch diameter anchor bolts) were placed in a similar 6 foot 0 inch grid pattern in the concrete pool floor. Individual embedded plates (2 inch by 4 inch by 3/8 inch ASTM A36 with 1/2-inch diameter Nelson studs) were placed at 2 feet 0 inch on center within these wall and floor grid systems. The liner plate was subsequently attached to the embedments in 6 foot panels with a continuous groove weld at the seams to the continuous grid embedments and with plug welds at 2 feet 0 inch on center to the individual embedments. This anchorage system resulted in unsupported liner panels of 2 feet 0 inch by 2 feet 0 inch.

The liner plate and anchorage system have been designed for the forces resulting from long-term shrinkage of concrete, and a temperature rise to 158°F from the 70°F ambient temperature with nominal cooling. The maximum compression force in the liner is calculated using the total strain of the long-term shrinkage of the concrete and the temperature rise. This compressive stress in the liner is limited to 0.90 F_y.

The maximum anchor force is obtained as follows. Before buckling, all panels are under the same compressive force and the anchor system is not carrying any load. When buckling occurs, the force in the buckled panel will be lower than that of the adjacent unbuckled panel. The difference between these forces, is resisted by the anchors. The maximum difference occurs when the force in the buckled panel is assumed to be zero. This assumption will lead to a maximum anchor force.

Additional seismic forces acting on the anchorage are found to be negligible when compared to the thermal loading. There are no attachments made directly to the liner plate; therefore, the only seismic forces acting on the anchorage would be from the self-weight excitation of the plate.

The activity release from a dropped or ruptured fuel assembly shall be limited such that the radiation dose at the site boundary will not exceed the limits stated in 10 CFR 50.67.

Activity releases in the event of fuel damage in the spent fuel pool would be limited by the decontamination factor provided by the pool water. The ventilation system provided in the fuel handling building is equipped with filtration devices to limit

the potential release of radioactive materials including iodine. The design is described in detail in Subsection 9.4.2.

The fuel storage facility is contained and the equipment is designed so that accidental releases of radioactivity are monitored and will not exceed the guidelines of 10 CFR 50.67. Subsection 15.7.4 contains analyses of hypothetical fuel handling accidents.

The fuel racks are designed and fabricated with a high degree of reliability and integrity.

A list of codes and standards used for the spent fuel storage racks is given below:

a. Design Codes

(1) AISC Manual of Steel Construction, 8th Edition, 1980.

(2) ANSI N210-1976, "Design Requirements for Light Water Reactor Spent Fuel Storage Facilities at Nuclear Power Stations" (contains guidelines for fuel rack design).

(3) American Society of Mechanical Engineers (ASME), Boiler and Pressure Vessel Code Section III, 1995 Edition (governing material procurement, fabrication and NDE); Subsection NF, 1983 Edition up to and including Summer 1983 Addenda; Subsection NB Paragraph 3222.4 for Fatigue Analysis of Racks and Liner; ASME Section V, 1995 Edition; Section VIII, 1995 Edition; Section IX, 1995 Edition; and Section XI, 1995 Edition.

(4) ASNT-TC-1A June, 1980 American Society for Nondestructive Testing (Recommended Practice for Personnel Qualifications).

b. Material Codes - Standards of ASTM or ASME (as applicable)

(1) SA240 - Standard Specification for Heat-Resisting Chromium and Chromium-Nickel Stainless Steel Plate, Sheet and Strip for Fusion-Welded Unfired Pressure Vessels.

(2) SA564, Standard Specification for Hot-Rolled and Cold-Finished Age-Hardening Stainless and Heat-Resisting Steel Bars and Shapes.

(3) C750 - Standard Specification for Nuclear-Grade Boron Carbide Powder.

(4) American Society of Mechanical Engineers (ASME), Boiler and Pressure Vessel Code, Section II-Parts A and C, 1995 Edition.

c. Welding Codes

ASME Boiler and Pressure Vessel Code, Section IX - Welding and Brazing Qualifications, 1995 Edition.

d. Quality Assurance, Cleanliness, Packaging, Shipping, Receiving, Storage, and Handling Requirements

(1) ANSI/ASME NQA-1-1989, Quality Assurance Program Requirements for Nuclear Facilities

(2) ANSI/ASME NQA-2-1989, Quality Assurance Requirements for Nuclear Facility Applications.

(3) ANSI N45.2.2 - Packaging, Shipping, Receiving, Storage and Handling of Items for Nuclear Power Plants.

(4) ANSI N45.2.15-18 - Hoisting, Rigging, and Transporting of Items For Nuclear Power Plants.

e. Governing NRC Design Documents

(1) NUREG-0800, Radiological Consequences of Fuel Handling Accidents.

(2) "OT Position for Review and Acceptance of Spent Fuel Storage and Handling Applications," dated April 14, 1978, and the modifications to this document of January 18, 1979.

(3) NUREG 0612, "Control of Heavy Loads at Nuclear Power Plants", USNRC, Washington, D.C., July, 1980.

f. Other ANSI Standards (not listed in the preceding)

(1) ANSI N45.2-1971 - Quality Assurance Program Requirements for Nuclear Facilities

(2) ANSI 57.2-1983 - Design Requirements for Light Water Reactor Spent Fuel Storage Facilities at Nuclear Power Plants

(3) ANSI N14.6 - American National Standard for Special Lifting Devices for Shipping Containers Weighing 10,000 pounds (4500 kg) or more for Nuclear Materials

(4) ANSI 8.21 - Use of Fixed Neutron Absorbers in Nuclear Facilities Outside Reactor (supplemented by 4.1e (2) as applicable).

g. Code-of-Federal Regulations

(1) 10CFR20 - Standards for Protection Against Radiation

(2) 10CFR21 - Reporting of Defects and Non-compliance

(3) 10CFR50 - Appendix A - General Design Criteria for Nuclear Power Plants

(4) 10CFR50 - Appendix B - Quality Assurance Criteria for Nuclear Power Plants and Fuel Reprocessing Plants

h. Regulatory Guides

(1) RG 1.13 - Rev.1, Spent Fuel Storage Facility Design Basis (Revision 2 Proposed)

(2) RG 1.25 - Rev.0, Assumptions Used for Evaluating the Potential Radiological Consequences of a Fuel Handling Accident in the Fuel Handling and Storage Facility of Boiling and Pressurized Water Reactors

(3) RG 1.28 - Rev.3, (ANSI N45.2) - Quality Assurance Program Requirements

(4) RG 1.29 - Seismic Design Classification (Rev. 3)

(5) RG 1.38 - Rev.2 (ANSI N45.2.2) Quality Assurance Requirements for Packaging, Shipping, Receiving, Storage and Handling of Items for Water-Cooled Nuclear Power Plants

(6) RG 1.61 - Damping Values for Seismic Design of Nuclear Power Plants, Rev. 0, 1973

(7) RG 1.64 - Rev.2, (ANSI N45.2.11) Quality Assurance Requirements for the Design of Nuclear Power Plants

(8) RG 1.124 -Rev.1, Service Limits and Loading Combinations for Class 1 Linear-Type Component Supports, Revision 1, 1978

(9) RG 3.41 -Rev.1, Validation of Calculational Methods for Nuclear Criticality Safety, Revision 1, 1977

(10) IE Information Notice 83-29 - Fuel Binding Caused by Fuel Rack Deformation

i. Branch Technical Position

(1) CPB 9.1-1 - Criticality in Fuel Storage Facilities

(2) ASB 9-2 - Residual Decay Energy for Light-Water Reactors for Long-Term Cooling

j. Standard Review Plan

(1) SRP 3.2.1 - Seismic Classification

(2) SRP 3.7.1 - Seismic Design Parameters

(3) SRP 3.7.2 - Seismic System Analysis

(4) SRP 3.7.3 - Seismic Subsystem Analysis

(5) SRP 3.8.4 - Other Seismic Category I Structures (including Appendix C), Technical Position on Spent Fuel Rack

(6) SRP 9.1.2 - Spent Fuel Storage, Revision 3, 1981

9.1.2.3.11 Dry Cask Storage

Dry Cask Storage (DCS) system and the Independent Spent Fuel Storage Installation (ISFSI) provide the means for long-term onsite storage of spent nuclear fuel (SNF). The DCS system is the HI-STORM 100 Cask System, including the HI-STORM 100S Overpack, HI-TRAC 125D Transfer Cask and Multi-Purpose Canisters. The ISFSI includes the storage pad and load path within the protected area. Use of the DCS is granted upon issuance of a Certificate of Conformance (CoC) from the NRC. Use of the ISFSI for storage and handling of spent fuel is granted upon compliance with the conditions of the General License issued under 10CFR72, Subpart K. Use of the ISFSI for storage and handling of spent fuel shall be in accordance with the Byron and Braidwood Nuclear Power Stations Units 1 and 2 Regulation 10CFR72.212 Evaluation Report. Cask handling will be with single-failure proof capabilities of the Fuel Handling Building crane.

The information and analyses of the DCS are compiled in the Holtec International "Final Safety Analysis Report for the HI-STORM 100 Cask System", Holtec report no. HI-2002444. The report describes the basis for NRC approval under provisions of 10CFR72 for using the HI-STORM 100 System.

9.1.3 Spent Fuel Pool Cooling and Cleanup System

The spent fuel pool cooling system (SFPCS) is designed to remove the decay heat generated by stored spent fuel assemblies from the spent fuel pool water. This cooling is accomplished by taking high-temperature water from the pool, pumping it through a heat exchanger and returning the cooled water to the pool. A

secondary function of the spent fuel pool cooling system is to clarify and purify spent fuel pool, transfer canal, and refueling water. A portion of the hot water discharged by the pump can be diverted through a water cleanup system and returned to the pool.

The spent fuel pool cleanup system is supplemented by the use of the Tri-Nuclear Underwater Filter Systems UFV-260 and UF-600. These systems are designed to maintain optimum clarity in the spent fuel pool or refueling cavity. The systems are self-contained and are completely submerged. Each system is designed to operate unattended for long periods without filter changes or other maintenance. Filter elements can be changed out completely underwater using customized tools. Two different types of systems are currently in use. The UFV-260 system uses a twin-filter element and a dual-suction hose connection that can take a suction from remote locations and discharge through a tee fitting.

UFV-260 can be used with a pool skimmer to skim floating surface dirt and crud pockets or sludge from the floor simultaneously using various attachments. In addition, the UFV-260 can be used without any suction hoses attached for general area cleaning of SFP/refueling cavity water. The UF-600 system is designed to rapidly filter and cleanup water in the refueling cavity or spent fuel pool. The unit is not designed for vacuum service. The four filter housings draw water through their open tops, and discharge filtered water via the pump and tee fitting.

The SFPCS is capable of maintaining the pool water at a low enough temperature to prevent excessive vapor formation or evaporation from the water surface, or cause excessive discomfort to personnel during fuel handling operations. The SFPCS is shown on Drawing M-63. This system is common to both units.

9.1.3.1 Design Bases

Spent Fuel Pool Cooling

The spent fuel pool cooling system is designed to remove the amount of decay heat that is produced by the number of spent fuel assemblies that are stored in the pool following a refueling and the accumulated assemblies resulting from previous refuelings that are in the pool.

Refueling operations are routinely performed in either an approximate one-third core offload or a full core temporary offload where approximately two-thirds of the fuel assemblies are returned to the reactor vessel, along with the new fuel, prior to the end of the outage. A third refueling mode, dual-unit discharge, would be an abnormal circumstance, but is also considered in the analysis. The one-third core off-load and the full core off-load cases are analyzed assuming single failure of one train of spent fuel pool cooling. The dual-unit discharge case is analyzed assuming both trains of spent fuel pool cooling are available. The three fuel discharge modes are designated as:

a. Normal refueling discharge - 1/3 of the reactor core.

b. Full core discharge.

c. Normal refueling discharge from one unit followed 17 days later by a full core discharge from the other unit.

An equilibrium reload consists of 84 assemblies (with 18-month cycles). The four transitional reloads for each unit consist of 88 assemblies. For the scenario evaluated in this section, the fuel transfer begins after 100 hours of decay time in the reactor (time after shutdown). Outage specific evaluations may be performed, in support of shorter fuel decay times in the reactor, by taking credit for existing margins in the design basis analysis. It is assumed that the time period of discharge of this batch is 10.5 hours (eight assemblies transferred to the pool per hour). The cooling system consists of a Seismic Category I spent fuel cooling circuit. The bulk temperature analysis assumes a 105°F coolant inlet temperature to the spent fuel pool heat exchanger for these refueling cases.

For the full core discharge, it is assumed that the total time period for the discharge of the full core is 24.1 hours (after 100 hours of shutdown time in the reactor). The discharge rate to the pool is assumed to be continuous and uniform.

For the 17-day back-to-back discharge mode, the following assumptions were made; 410 hours between the normal discharge and the full core discharge; six months between the normal discharge and the previous normal discharge.

For the normal discharge and full core discharge, the discharges are assumed to be into a pool containing 2864 fuel assemblies from 34 previous discharges. Table 9.1-1a identifies the three cases examined.

The fuel assemblies are removed from the reactor after maximum postulated time of 1642 Effective Full Power Days (EFPD) of operation. Since the decay heat load is a monotonically increasing function of the cumulative reactor operating time, τ_o, it is conservatively assumed that every fuel assembly discharged has had the maximum postulated τ_o of 1642 EFPD for the batch size of 84.

The water inventory in the reactor cavity cooled by the residual heat removal (RHR) heat exchanger exchanges heat with the fuel pool water mass through the refueling canal.

This source of heat removal is neglected in the analysis. Thus, the results obtained for the normal refueling discharge, full core discharge and 17-day discharge mode are conservative.

The fuel pool cooling system (FC) consists of two independent trains, each consisting of one pump and heat exchanger. Either train is capable of providing sufficient cooling for the pool.

Table 9.1-2 identifies all relevant design data for the spent fuel pool heat exchangers.

Table 9.1-3 gives the maximum pool bulk temperatures for the three cases analyzed.

Water Purification

The system's demineralizers and filters are designed to provide adequate purification to permit unrestricted access for plant personnel, to maintain reasonable pool surface dose rates during fuel handling operation in the spent fuel storage area and to maintain optical clarity of the spent fuel pool water. The optical clarity of the spent fuel pool water surface is maintained by use of the system's two floating skimmers, strainer, and skimmer filter at Byron, and by the skimmer and skimmer filter at Braidwood.

The water cleanup circuit contains a filter with a retention of suspended particulates necessary to maintain spent fuel pool clarity and purity. There is also a mixed bed demineralizer downstream of the filter. The cleanup system is designed for a flow rate sufficient to ensure adequate circulation of the entire pool water volume, and maintain the specified water chemistry.

During the nonrefueling operations, the boron concentration in the pool water is maintained at a minimum concentration specified in the Core Operating Limits Report. However, the stations may allow the boron concentration to go below 2300 ppm but above the Technical Specifications limit of 300 ppm. A boron concentration of 0 ppm when fuel assemblies are not being moved in the spent fuel racks, and a concentration of 220 ppm when fuel assemblies are being moved in the spent fuel racks maintains a K_{eff} of less than or equal to 0.95 in the spent fuel racks. Provisions are made to makeup water to the pool both as demineralized water to compensate for evaporation and as borated water corresponding to the refueling water concentration. The makeup water meets specified water chemistry.

System Capacity Bases

NUREG-0800 (Ref. 29) is utilized to compute the heat dissipation requirements in the pool. The total decay heat consists of fission product and heavy element decay heat. Total decay heat, P, for a fuel assembly is given as a linear function of P_o and as an exponential function of τ_o and τ_s:

$$P = P_o f(\tau_o, \tau_s)$$

where:

P	=	total decay heat per fuel assembly, linear function of P_o
P_o	=	average operating power per fuel assembly
τ_o	=	cumulative exposure time of the fuel assembly in the reactor
τ_s	=	time elapsed since reactor shutdown

The appropriate uncertainty factor, K, was applied in accordance with NUREG-0800 (Ref. 29). Furthermore, the operating power, P_o, is taken equal to the rated power, even though the reactor may be operating at less than its rated power during much of the exposure period for the batch of fuel assemblies. Finally, the computations and results reported here are based on the discharge taking place when the inventory of fuel in the pool will be at its maximum resulting in an upper bound on the computed decay heat rate.

Having determined the heat dissipation rate, the next task is to evaluate the time-dependent temperature of the pool water. Table 9.1-1a identifies the heat loading cases that were examined. The pool bulk temperature is determined using the first law of thermodynamics (conservation of energy).

A number of simplifying assumptions are made which render the analysis conservative, principally:

- The heat exchangers are assumed to have maximum fouling. Thus, the temperature effectiveness, S, for the heat exchanger utilized in the analysis is the lowest postulated value: S = .3875 for fuel pool cooler. S is calculated from heat exchanger technical data sheets.

- No credit is taken for the improvement in the film coefficients of the heat exchanger as the operating temperature rises. Thus, the film coefficient used in the computations are lower bounds.

- No credit is taken for heat loss to pool walls and pool floor.

The basic energy conservation relationship for the Byron pool heat exchanger system yields:

$$C \frac{dt}{d\tau} = P_{cons} + Q(\tau) - Q_{HX} - Q_{EV}$$

where:

C	=	Thermal capacity of stored water in the pool
t	=	Temperature of pool water at time,
P_{cons}	=	Heat generation rate from previously discharged assemblies
$Q(\tau)$	=	Heat generation rate from freshly discharged fuel as a function of time,
Q_{EV}	=	Heat loss to surroundings from pool surface
Q_{HX}	=	Heat removed in the fuel pool cooler.

The pool has a total water inventory of approximately 61,358 cubic feet when all racks are in place in the pool and every storage location is occupied.

The calculations were performed for the pool, disregarding the additional thermal capacity and cooling system available in the transfer canal, and the reactor cavity.

For a specified coolant inlet temperature and flow rate, the quantity Q_{HX} is shown to be a linear function of τ in a recent paper by Singh (Ref. 30). As stated earlier, Q is an exponential function of τ. Thus, the equation can be integrated to determine t directly as a function of τ. The results show that the pool water never approaches the boiling point even with the most adverse heat load. Summarized results are given in Table 9.1-3.

Finally, computations are made to determine the time interval to boiling after all heat dissipation paths are lost.

Computations are made for each case under the assumption that all cooling is lost at the instant pool bulk temperature reaches the maximum value, concurrent with heat dissipation power reaching its maximum value in the pool.

Results are summarized in Table 9.1-4. Table 9.1-4 gives the bulk boiling vaporization rate for all cases at the instant the boiling commences. This rate will decrease with time due to reduced heat generation in the fuel. In all cases, adequate time exists to take corrective action.

A backup source of primary water is available from two 500,000 gallon primary water storage tanks via a return line as indicated in Drawing M-63.

If the capacity of the refueling water storage tanks is exhausted and the non-Category I backup makeup water sources are not available, the unborated fire protection safety Category I water system can be utilized.

9.1.3.2 System Description

The Safety Category I spent fuel pool cooling system shown in Drawing M-63 consists of two complete cooling trains. The spent fuel pool cooling system (piping, pumps, valves, and heat exchangers) is Safety Category I, Quality Group C. The 3-inch piping from the refueling water storage tanks to the refueling water purification pump, the pump, and its associated piping and valves are Safety Category I, Quality Group C. A 2-inch Safety Category I, Quality Group C line from the discharge of the refueling water purification pump to the spent fuel pool is permanently installed. This is the Category I water makeup circuit. The backup Safety Category I makeup system consists of piping and hoses from the Safety Category I fire protection system. The primary water makeup system non-Category I takes water from both primary water storage tanks and routes the water through the spent fuel pool water filter and then to the return header as indicated in Drawing M-63. In addition, primary water may be added to the spent fuel pool via a fire hose connection in the fuel handling building. In summary, there are three sources of makeup water available, a primary unborated non-Category I source, a borated Safety Category I source, and an unborated fire protection Safety Category I water system.

Each cooling train incorporates one heat exchanger and pump, one purification loop with demineralizer and filter, and associated piping, valving, and instrumentation. One surface skimmer loop is also provided. Each cooling train is designed to service the spent fuel pool, with design spent fuel assembly loading, and to maintain the bulk fluid temperature of the pool below 141°F. Considering the conservatisms used in the analyses and that no credit was taken from evaporative heat loss, the actual pool temperature is not expected to reach 140°F for the one-third core discharge mode. The maximum pool temperature is below 163°F for the full core discharge mode. For the abnormal discharge mode, the spent fuel pool temperature is maintained below 139°F. However, the spent fuel pool temperature is monitored via operator rounds to assure temperature is between 70°F and 110°F. A high temperature alarm annunciates in the main control room when pool temperature reaches 149°F.

The spent fuel pool cooling system removes decay heat from fuel stored in the spent fuel pool. Spent fuel is placed in the pool during the refueling sequence, and stored there until it is shipped offsite. Heat is transferred from the spent fuel pool cooling system, through the heat exchanger to the component cooling system.

When either cooling train is in operation, water flows from the spent fuel pool to the spent fuel pool pump suction, is pumped through the tube side of the heat exchanger, and is returned to the pool. The suction line, which is protected by a strainer, is located at an elevation approximately 6 1/2 feet below the normal spent fuel pool water level, while the return line contains an

antisiphon hole near the surface of the water to prevent gravity drainage of the pool. This cooling water return line terminates approximately six feet above the stored fuel assemblies.

While the heat removal operation is in process, a portion of the spent fuel pool water, approximately 80 gpm, may be diverted through a demineralizer and a filter to maintain spent fuel pool water clarity and purity. Transfer canal water may also be circulated through the same demineralizer and filter by having the gate between the canal and the spent fuel pool open. This purification loop is sufficient for removing

fission products and other contaminants which may be introduced if a leaking fuel assembly is transferred to the spent fuel pool.

The demineralizer and filter of either cooling train may be isolated from the heat removal portion of the spent fuel pool cooling system. By so doing, the isolated equipment may be used in conjunction with the refueling water purification pump to clean and purify the refueling water while spent fuel pool heat removal operations proceed. Connections are provided such that the refueling water may be pumped from either the refueling water storage tank or the refueling cavity of either unit, through a filter and demineralizer, and discharged to the refueling cavity or refueling water storage tank of either unit.

To assist further in maintaining spent fuel pool water clarity, the water surface is cleaned by a skimmer loop. Water is removed from the surface by the skimmer, pumped through a filter, and returned to the pool surface at two locations remote from the skimmers at a rate of approximately 50 gpm.

The spent fuel pool is initially filled for use with water that is at the same boron concentration as that in the refueling water storage tank. Borated water may be supplied from the refueling water storage tank via the refueling water purification pump connection, or by a temporary connection from the boric acid blender, located in the chemical and volume control system. Demineralized water can be added for makeup purposes (i.e., to replace evaporative losses) through a connection in each cooling train's purification return loop.

The pool water may be separated from the water in the transfer canal by a gate. The gate is installed so that the transfer canal may be drained to allow maintenance of the fuel transfer equipment. The water in the transfer canal is first pumped, via portable pump, into the spent fuel pool and may then be transferred to the recycle holdup tanks in the boron recycle system by a spent fuel pool pump. When required, the water may then be returned directly to the transfer canal by the recycle evaporator feed pumps (boron recycle system).

The Unit 1 spent fuel pool pump is normally powered from the Unit 1 BOP bus. In an emergency, such as loss of offsite power, the pump could be powered from one of the two ESF buses by manually aligning the BOP bus with one of the ESF buses.

The Unit 2 spent fuel pool pump is normally powered from the Unit 2 BOP bus and as before, in an emergency, it would be powered by one of the two Unit 2 ESF buses. The refueling water purification pump OA, which is a Safety Category I, Quality Group C makeup water supply pump, is powered from a Unit 1 ESF bus.

Component Description

Spent fuel pool cooling system codes and classifications are given in Table 3.2-1. Equipment design parameters are given in Table 9.1-2.

Spent Fuel Pool Pumps

Two identical pumps are installed in parallel in the heat removal portion of the spent fuel pool cooling system. Each pump is sized to deliver sufficient coolant flow through a spent fuel pool heat exchanger to meet the system cooling requirements. In addition to the spent fuel pool heat removal duty, the pumps may also be used in the transfer and clarification of the transfer canal water.

The pumps are horizontal, centrifugal units, with all wetted surfaces being stainless steel or an equivalent corrosion-resistant material. The pumps are controlled manually from a local station.

Spent Fuel Pool Skimmer Pump

The spent fuel skimmer pump is designed to circulate surface water through a skimmer and filter and return it to the pool at 100 gpm. However, filter design modifications have resulted in a decreased system flow rate of 50 gpm, which is acceptable.

Refueling Water Purification Pump

One 150 gpm Safety Category I refueling water purification pump and one 250 gpm Safety Category II refueling water purification pump are used to circulate water from the refueling cavity and the refueling water storage tank through the spent fuel pool demineralizer and filter. The pumps are operated manually from a local station.

Spent Fuel Pool Heat Exchangers

The heat exchangers are the shell-and-tube type. Spent fuel pool water circulates through the tubes while component cooling water circulates through the shell. The use of two 100% capacity heat exchangers provides redundancy so that safety functions can be performed assuming single active failure of components. The tubes and other surfaces in contact with the pool water are austenitic stainless steel and the shell is carbon steel. The tubes are welded to the tube sheet to prevent leakage of pool water.

Spent Fuel Pool Demineralizers

Each flushable, mixed bed demineralizer is designed to provide adequate fuel pool water purity for unrestricted access to the

pool working area while maintaining visual clarity. Design flow is 120 gpm. At Braidwood, the flow limit is increased to 180 gpm per Reference 51.

No over temperature protection is required for the spent fuel pool demineralizers. As shown in Table 9.1-1, the temperature of the spent fuel cooling water will slightly exceed the temperature at which the ion removal capability of the resin would be adversely affected (approximately 160°F) when only one of the two cooling trains is in operation. However, with the pool temperature high alarm at 149°F, operator actions will provide additional cooling to prevent the pool temperature from reaching 160°F.

Spent Fuel Pool Filter

The spent fuel pool filters contain properly sized filter cartridges to improve the pool water clarity by removing insoluble particles which obscure visibility. By using a replaceable synthetic fiber filter cartridge, organic growth is avoided.

Spent Fuel Pool Skimmer Filter

The spent fuel pool skimmer filter contains properly sized filter cartridge for removing insoluble particles.

Spent Fuel Pool Strainers

The strainers are located in each spent fuel pool pump suction line for removal of relatively large particles which might otherwise clog the spent fuel pool demineralizers or damage the spent fuel pool pumps.

Spent Fuel Pool Floating Skimmers

At Byron, two spent fuel pool floating skimmers are provided to remove debris from the surface of the spent fuel pool. At Braidwood, one spent fuel pool floating skimmer is provided to remove debris from the surface of the spent fuel pool. The floating skimmers automatically accommodate for changes in pool level.

Valves

Manual stop valves are used to isolate equipment; manual throttle valves provide flow control. Valves in contact with spent fuel pool water are austenitic stainless steel or equivalent corrosion-resistant material.

Piping

All piping in contact with spent fuel pool water is austenitic stainless steel. The piping is welded except where flanged connections are used to facilitate maintenance. To facilitate maintenance, the piping for the floating skimmers may use threaded unions (Byron only). The unions are to be welded onto the adjoining pipe (Byron only).

Startup, Normal Operation, and Cooldown

The spent fuel pool cooling system is not directly associated with either plant startup, normal operation, or shutdown; but is operated when there is need to cool, clarify, or purify the pool water. All situations are dependent upon the pool fuel loading and upon the elapsed time that the spent fuel has been in the pool.

A spent fuel pool pump is started manually on or before a high water temperature alarm, after assurance that cooling water is being furnished to the spent fuel pool heat exchangers.

The spent fuel pool water chemistry may then be checked at local sample points. If purification is required, a portion (approximately 80 gpm) of the system flow is diverted through the spent fuel pool demineralizer and filter, and returned to the pool. However, if only undissolved solids are to be removed, this flow may be circulated directly through the filter. A local sample connection is provided in the purification return line so that the effectiveness of either the filter or the demineralizer may be checked as well as the boron concentration.

The spent fuel pool pump may also be used to transfer water from the fuel pool to the plant holdup tanks. This capability is used during preparations for refueling, when the fuel transfer canal is emptied so that maintenance may be performed on the transfer equipment. The canal water is first pumped, via portable pump, into the fuel pool, then transferred to the holdup tank.

At Byron, to maintain water surface clarity, a separate cleaning loop, the spent fuel pool skimmer loop, is also provided. This subsystem, which is started manually, collects surface water from the pool, filters it, and returns it to the pool at two remote locations at a rate of approximately 50 gpm. The Byron skimmer loop utilizes two floating skimmers and the Braidwood skimmer loop utilizes a single floating skimmer without a straining function.

Refueling

The spent fuel pool cooling system has its maximum duty during the refueling operation when the decay heat from the spent fuel is the highest. The system is normally placed in operation prior to the transfer of any fuel and is continued in operation as long as required to maintain temperature and water purity.

9.1.3.3 Safety Evaluation

Availability and Reliability

The spent fuel pool cooling system has no emergency function during an accident. A cooling train may be shut down for limited periods of time for maintenance or replacement of malfunctioning components. In the event of the failure of a spent fuel pool pump or loss of cooling to a spent fuel pool heat exchanger, the second cooling train provides 100% backup capability, thus assuring continued cooling of the spent fuel pit.

The results of the unlikely event of a failure of the return line to the spent fuel pool downstream of the two spent fuel pool heat exchangers would be a rise in pool water temperature followed by an increase in evaporative losses. These losses could be made up indefinitely from the Safety Category I fire protection system.

The fire protection system does not use the return line to the spent fuel pool. The spent fuel pool system piping arrangement precludes siphoning after any failure by containing a 1/2-inch diameter hole four inches below the water level. No criticality limitations in the pool could occur through the addition of unborated water since the fuel racks are designed to accommodate this event. Only as a last resort would unborated water be introduced into the spent fuel pool, and if this becomes necessary, ample time is available for installing temporary piping or hoses from a nearby connection.

As indicated in Drawing M-63, borated water for makeup purposes is available from the two Safety Category I 450,000-gallon refueling water storage tanks to the refueling water purification pumps. All piping, valves, and one pump are Safety Category I Class C type components thus meeting the redundancy requirements for pool makeup capability.

As required, a reliable backup source of unborated water is available through the fire protection system cross-tie to the essential service water system. Primary backup water is available from two 500,000-gallon primary water storage tanks via a return line as indicated in Drawing M-63. The redundancy and backup water sources' capability is assured via administrative controls in plant procedures.

Spent Fuel Pool Dewatering Protection

The most serious failure of this system would be complete loss of water in the storage pool. Standard Review Plan Section 9.1.3 requires cooling systems to be designed so that in the event of failure of inlets, outlets, piping, or drains, the pool level will not be inadvertently drained below a point approximately 10 feet above the top of the active fuel.

Ten feet above the active fuel corresponds to an elevation of 410'0". Both the cooling and skimmer systems meet this requirement. No piping in the pool extends below the 410'0" elevation except the spent fuel pool cooling system discharge pipe. This pipe contains an anti-siphon hole near the surface of the spent fuel pool. The two Byron skimmer loop suction lines, from the spent fuel pool floating skimmers to the skimmer pump, each have an anti-siphon hole. At Braidwood, the suction line from the spent fuel pool floating skimmer to the skimmer pump has an anti-siphon hole.

With approximately 26 feet of water between the top of the active region of the spent fuel assemblies stored in the high-density racks and the spent fuel pool low level alarm, sufficient shielding remains over the fuel after any postulated spent fuel pool dewatering incident to allow recovery operations to continue. The incidents are as follows:

a. The accidental opening of the gate between the spent fuel pool and the transfer canal, if the canal were dry, would lower the water level approximately 6 feet 10 inches. This would leave 18 feet 6 inches of water over the top of the active fuel.

b. The simultaneous failure of the transfer canal gate seal and the cask fill area gate seal, starting with an empty cask area and transfer canal, would lower the water level approximately 8 feet 5 inches. This would leave approximately 16 feet 11 inches of water over the top of the active fuel.

c. Given initial conditions as noted above with the exception of an open transfer tube and an empty refueling cavity, the spent fuel pool water level would be lowered approximately 22 feet 10 inches to the bottom sill of the sluice gate. This leaves at least 2 feet 6 inches of water as shielding over the active portion of the spent fuel in storage.

The spent fuel pool, transfer canal, and spent fuel cask washdown area have a 3/16-inch stainless steel liner welded to embedments in the walls and floors. At most liner weld seams, continuous drains are provided for leak detection. Figure 9.1-20 and 9.1-21 show typical drain details. These are interconnected and any leakage is channeled through five 1-1/2 inch drain lines to a valve in the auxiliary building. A sight glass downstream of each valve may be monitored to determine if leakage is occurring.

Water Quality

Only a very small amount of water is interchanged between the refueling canal and the spent fuel pool as fuel assemblies are transferred in the refueling process. Whenever a fuel assembly with defective cladding is transferred from the fuel transfer canal to the spent fuel pool, a small quantity of fission products may enter the spent fuel cooling water. The purification loop provided on each cooling train removes fission products and other contaminants from the water. By maintaining radioactivity concentrations, excluding tritium, in the spent fuel pool water at or below 5×10^{-3} $\mu Ci/cm^3$ (β and γ) gamma, the dose at the surface of the pool should be less than or equal to 2.5 mrem/hr above the background (Ref. Table 12.2-25).

The suggested samples and instrument readings and the frequency of measurement to monitor water purity and the respective chemical limits of the SFP are:

Analysis	Limit	Frequency
Gross Alpha (Demin. In and Out)		1/wk
Gross Beta (Demin. In and Out)		1/wk
Crud Radionuclide		on demand
General Radionuclide		1/wk
pH		1/wk
Boric Acid	≥2300 ppm*	1/wk
Chloride (Demin. In and Out)	less than 0.15 ppm	1/wk
Fluoride (Demin. In and Out)	less than 0.15 ppm	1/wk

* The station may allow the SFP boron concentration to go below 2300 ppm but above the Technical Specifications limit of 300 ppm, which ensures a boron concentration greater than the concentration required to maintain a K_{eff} of less than or equal to 0.95 for the SFP racks.

The basis for chemical limits are to minimize corrosion and maintain subcriticality. Radiochemical analyses are performed to monitor fuel integrity.

Demineralizer beds must maintain a decontamination factor greater than 10 and filters should maintain a differential pressure less than vendor-recommended limitations.

9.1.3.4 Inspection and Testing Requirements

Active components of the spent fuel pool cooling system are in either continuous or intermittent use during normal system operation. Periodic visual inspection and preventative maintenance are conducted using normal industry practice.

No special equipment tests are required since the system's components are normally in operation when spent fuel is stored in the fuel pool.

Sampling of the fuel pool water for gross activity and particulate matter concentration is conducted. The layout of the components of the SFPCS are such that periodic testing and inservice inspection of this system are possible. Details of the inservice inspection program are outlined in Section 6.6.

Instrumentation Application

The instrumentation provided for the spent fuel pool cooling system is discussed in the following paragraphs. Alarms indications are provided as noted.

Temperature

Instrumentation is provided to measure the temperature of the water in the spent fuel pool and to give local indication as well as annunciation in the control room when normal temperatures are exceeded.

Instrumentation is also provided to give local indication of the temperature of the spent fuel pool water as it leaves either heat exchanger.

Pressure

Instrumentation is provided to measure and give local indication of the pressures in the spent fuel pool pump suction and discharge lines and in the skimmer pump discharge line. Instrumentation is also provided at locations upstream and downstream from each spent fuel pool filter so that the pressure differential across these filters can be determined.

Flow

Instrumentation is provided to measure and give local indication of the flow in the outlet line of each spent fuel pool filter.

Level

Instrumentation is provided to give an alarm in the control room when the water level in the spent fuel pool reaches either the high- or low-level setpoint.

Radiation

Gamma radiation is continuously monitored in the fuel handling building. A high-level signal is alarmed locally and is annunciated in the control room. This is described in detail in Subsection 12.3.4.

9.1.4 Fuel Handling System

9.1.4.1 Design Bases

The fuel handling system (FHS) consists of equipment and structures utilized for safe refueling and fuel handling operation Meeting General Design Criteria 61 and 62 of 10 CFR 50, Appendix A.

The following design bases apply to the FHS:

a. Fuel handling devices have provisions to avoid dropping or jamming of fuel assemblies during transfer operations.

b. Handling equipment has provisions to avoid dropping of fuel handling devices during the fuel transfer operation.

c. Handling equipment used to raise and lower spent fuel have a limited maximum lift height so that the minimum required depth of water shielding is maintained.

d. Criticality during fuel handling operations is prevented by geometrically safe configuration of the fuel handling equipment.

e. Handling equipment will not fail in such a manner as to damage Seismic Category I equipment in the event of a safe shutdown earthquake.

f. The inertial loads imparted to the fuel assemblies or core components during handling operations are less than the loads which could cause damage.

g. Physical safety features are provided for personnel operating handling equipment.

9.1.4.2 System Description

The FHS consists of the equipment needed for the refueling of the reactor core and for fuel movement in the fuel building. This equipment is comprised of a reactor component hoisting equipment, a handling equipment and a fuel transfer system (FTS).

The structures associated with the fuel handling system are the Refueling Cavity, Fuel Transfer Canal, Spent Fuel Storage Pool, New Fuel Storage Vaults, New Fuel Elevator, the Spent Fuel Cask Loading Pit, and the Cask Decontamination Area.

New fuel assemblies received for initial core loading are removed one at a time from the shipping container and stored in the new fuel vault; or are lowered into the spent fuel storage area by the new fuel elevator and stored in the spent fuel storage area racks; or fuel assemblies received for initial core loading may also be inserted directly into the spent fuel storage racks using the new fuel handling tool and the fuel handling building crane. This method of fuel storage will require an override of the fuel handling building crane interlocks and would occur only for receipt and dry storage of first core fuel.

The fuel handling equipment is designed to handle a spent fuel assembly underwater from the time it leaves the reactor vessel until it is ready for placement in a container for shipment from the site. Underwater transfer of spent fuel assemblies provides an effective, economic, and transparent radiation shield, as well as a reliable cooling medium for removal of decay heat. The boric acid concentration in the water is sufficient to preclude criticality.

The associated fuel handling structures may be generally divided into two areas: the refueling cavity and fuel transfer canal. The refueling cavity is flooded only during plant shutdown for refueling. The refueling and the fuel transfer canal are connected by a fuel transfer tube. This tube is fitted with a gate valve on the fuel transfer canal end and a blind flange on the refueling cavity end. Fuel is transported horizontally through the tube on an underwater transfer car.

Fuel is moved between the reactor vessel and the refueling canal by the refueling machine. The RCC change fixture or portable RCC change tool are used for transferring control elements from one fuel assembly to another fuel assembly. The thimble plug tool and BPRA tool are used to transfer inserts from one fuel assembly to another in the spent fuel pool. The FTS is used to move fuel assemblies between the containment building and the fuel storage building. After a fuel assembly is placed in the fuel container, the lifting arm pivots the fuel assembly to the horizontal position for passage through the fuel transfer tube. After the transfer car transports the fuel assembly through the transfer tube, the lifting arm at that end of the tube pivots the assembly to a vertical position so that the assembly can be lifted out of the fuel container.

In the fuel storage building, fuel assemblies are moved about by the spent fuel bridge crane and the fuel handling building crane. When lifting fuel assemblies with the spent fuel bridge crane, the hoist uses a long-handled tool to assure that sufficient radiation shielding is maintained. A shorter tool is used with the fuel handling building crane to handle new fuel assemblies initially, and for operations following receipt of assemblies for initial core loading, the new fuel elevator must be used to lower the assembly to a depth at which the spent fuel pool bridge crane, using the long-handled tool, can place the new fuel assemblies into or out of the fuel storage racks.

As a precaution to prevent an inadvertent criticality while transferring new fuel between the new fuel storage vault, spent fuel storage pool, and the reactor vessel while the spent fuel pool is in a dry condition, the minimum edge to edge distance of 12 inches shall be maintained between a fuel assembly outside its shipping container, the storage racks or the reactor vessel, and all other fuel assemblies. More than two fuel assemblies may be out of their shipping containers, storage locations, or the reactor vessel provided the 12 inch minimum edge to edge distance is maintained in addition to insuring that a minimum separation distance of 5 feet is maintained between pairs of assemblies in motion.

9.1.4.2.1 Refueling Procedure

The refueling operation follows a detailed procedure which provides a safe, efficient refueling operation. Prior to initiating refueling operations, the reactor coolant system is

borated and cooled down to refueling shutdown conditions as specified in the technical specifications. Criticality protection for refueling operations, including a requirement for checks of boron concentrations every 72 hours, is specified in the technical specifications. The following significant points are assured by the refueling procedure:

a. The refueling water and the reactor coolant are maintained at a minimum boron concentration specified in the Core Operating Limits Report. This concentration, together with the negative reactivity of control rods, is sufficient to keep the core ≥ 5% $\Delta k/k$ subcritical during the refueling operations. It is also sufficient to maintain the core subcritical in the unlikely event that all of the rod cluster control assemblies were removed from the core.

b. The water level in the refueling cavity is high enough to keep the radiation levels within acceptable limits when the fuel assemblies are being removed from the core.

The refueling operation is divided into four major phases: (1) preparation, (2) reactor disassembly, (3) fuel handling, and (4) reactor assembly. A general description of a typical refueling operation through the four phases follows:

1. Phase I - Preparation

The reactor is shut down and cooled to cold shutdown conditions as specified in the technical specifications. During cold shutdown or later, following a radiation survey, the containment is entered. At this time, the coolant level in the reactor vessel is lowered to a point slightly below the vessel flange. The fuel transfer equipment and refueling machine are then checked for proper operation.

2. Phase II - Reactor Disassembly

All cables and insulation are removed from the vessel head. The refueling cavity is then prepared for flooding by sealing off the reactor cavity with an inflatable rubber bladder or noninflatable segmented reactor cavity seal (Byron) or equivalent and by installing the inspection cavity hatches and gaskets as required, checking the underwater lights, tools, and FTS; closing the drain lines and removing the blind flange to create access to the fuel transfer tube. With the refueling cavity prepared for flooding, the integrated vessel head assembly is unseated and raised above the vessel flange. Water from the refueling water storage tank is transferred into the reactor coolant system, causing the water to overflow into the refueling cavity.

Depending on radiological conditions, the vessel head and the water level in the refueling cavity may be raised simultaneously, keeping the water level just below the reactor head. The residual heat removal pumps are used to fill the refueling cavity. When the water reaches a safe shielding depth (see Subsection 9.1.4.3.4), the integrated

vessel head assembly is taken to its storage pedestal. The control rod drive shafts are disconnected and, with the upper internals, are removed from the vessel. The fuel assemblies and rod cluster control assemblies are now free from obstructions and the core is ready for refueling.

3. Phase III - Fuel Handling

The refueling sequence is started with the refueling machine. Normally, the entire core is offloaded to the spent fuel pool. If a fuel shuffle is to be performed, the positions of partially spent assemblies are changed, and new assemblies are added to the core.

The general fuel handling sequence is as follows:

a. The refueling machine is positioned over a fuel assembly.

b. The fuel assembly is lifted by the refueling machine to a predetermined height sufficient to clear the reactor vessel and still leave sufficient water covering to eliminate any radiation hazard to the operating personnel.

c. Not used.

d. The fuel transfer car is moved into the refueling cavity from the fuel transfer canal.

e. The fuel container is pivoted to the vertical position by the lifting arm.

f. The refueling machine is moved to line up the fuel assembly with the FTS.

g. The refueling machine loads the fuel assembly into the fuel container of the transfer car.

h. The container is pivoted to the horizontal position by the lifting arm.

i. The container is moved through the fuel transfer tube to the fuel transfer canal by the transfer car.

j. The fuel container is pivoted to the vertical position.

k. The spent fuel assembly is unloaded by the spent fuel handling tool attached to the spent fuel pool bridge crane.

l. The spent fuel assembly is placed in the spent fuel storage rack.

m. The inserts are swapped in the spent fuel pool.

n. The fuel is then transferred back to the appropriate location in the reactor core.

4. Phase IV - Reactor Assembly

Reactor assembly following refueling is achieved by reversing the operations given in Phase II, Reactor Disassembly.

Depending on radiological conditions, the vessel head and water may be lowered simultaneously during reassembly until the vessel head engages the guide studs. At this point of reassembly the water is lowered to the top of the reactor vessel flange. This allows visual observation of drive rod insertion into the piped locations of the vessel head.

9.1.4.2.2 Component Description

Refueling Machine

The refueling machine (Figure 9.1-12) is a rectilinear bridge and trolley system with a vertical mast extending down into the refueling water. The bridge spans the refueling cavity and runs on rails set into the edge of the refueling cavity. The bridge and trolley motions are used to position the vertical mast over a fuel assembly in the core. A long tube with a pneumatic gripper on the end is lowered down out of the mast to grip the fuel assembly. The gripper tube is long enough so that the upper end is still contained in the mast when the gripper end contacts the fuel. Fuel assemblies may be moved to open water (off-index) with the mast extended, either manually or electrically. A hoist mounted on the trolley raises the gripper tube and fuel assembly up into the mast tube. The fuel is transported while inside the mast tube to its new position.

The refueling machine is equipped with Westinghouse in-mast sipping system hardware to enable the machine to detect failed fuel assemblies. The hardware consists of suction manifold assemblies mounted on the top flange of the refueling machine stationary mast and the gripper mast assembly, an air nozzle manifold mounted on the bottom of the stationary mast, and covers over various mast openings to prevent crossflow. The permanently installed in-mast sipping hardware is used in conjunction with temporarily installed (normally platform mounted) analysis equipment. An analysis has been performed that shows that bulk boiling or DNB will not occur in the in-mast system for Incore Decay Times of ≥ 48 hours under the following limiting conditions:

Rated Thermal Power	≤ 3586.6 MWt
Refueling Cavity Temperature	≤ 140 °F
F_Q^{RTP}	≤ 2.60
Westinghouse 17x17 Fuel with Rod Outside Diameter	0.360 inches
AREVA 17x17 Advanced Mark-BW(A) Fuel with Rod Outside Diameter	0.374 inches

The sparging air will not have an adverse effect on the fuel assembly during a leak test.

The controls for the refueling machine are mounted in a removable console on the trolley. The bridge is positioned on a coordinate system laid out on one rail. Bridge position indication is provided by a readout video system on the console, or can be read directly by an operator. The trolley is positioned with the aid of a scale on the bridge structure which is read directly by the operator at the console. The drives for the bridge, trolley, and

hoist are variable speed and include separate jog (inching) controls. The maximum speeds are 53 fpm for the bridge, 26 fpm for the trolley and 22 fpm for the hoist. The auxiliary monorail hoist on the refueling machine has a two-step magnetic controller to give hoisting speeds of approximately 7 fpm and 22 fpm.

Electrical interlocks and limit switches on the bridge and trolley drives prevent damage to the fuel assemblies. The hoist is also provided with redundant interlocks (encoder and limit switch, switches on Braidwood Unit 1 and Byron Units 1 & 2) to prevent a fuel assembly from being raised above a safe shielding depth should one limit fail. In an emergency, the bridge, the trolley, and the hoist can be operated manually using a handwheel on the motor shaft.

Spent Fuel Pool Bridge Crane

The spent fuel pool bridge crane (Figure 9.1-13) is a wheelmounted walkway which spans the spent fuel storage area and fuel transfer canal and it carries two electric monorail hoists on an overhead structure. Following initial core loading, only the spent fuel pool bridge crane is used for handling fuel assemblies within the spent fuel storage area by means of a long-handled tool suspended from the hoist. The hoist travel and tool length are designed to limit the maximum lift of a fuel assembly to a safe shielding depth.

The spent fuel pool bridge crane has variable speed controllers for the bridge, hoist, and trolley motors. Programming of the installed electronics determines the permissible speed for the various motors. Electronic ramp rate controls are used in the bridge, trolley, and hoists to limit starting acceleration. Each monorail hoist has a corresponding movable pendant controller mounted on the bridge handrails. The pendant is used to control the bridge and trolley, or hoist motors direction and speed. Only one hoist and pendant combination may be operated at any time, an is determined using a select switch mounted on the main control console. The main control console also provides a display of various system information.

The following provides spent fuel pool bridge crane characteristics. The bridge speed is ranged from approximately 0 fpm to 40 fpm at Byron and from approximately 0 fpm to 40 fpm at Braidwood. Trolley speeds range from approximately 0 fpm to 40 fpm. Hoist speeds range from approximately 0 fpm to 22 fpm. The pendant provides the operator with a visual display of hook elevation, hoist load, and text message displays for various system parameters as listed in Table 9.1-8.

Containment Polar Crane

The containment polar cranes are designed for Class A service per CMAA 70, with a design load of 230 tons on the main hook and 40 tons on the auxiliary hook. In addition, the cranes have been designed to withstand OBE and SSE stresses and the containment test pressure. Vents have been provided where needed. The cranes are also designed for a 40-year dose of 10^8 rads as well as a 1-year dose of 3.5×10^7 rads.

Brakes are designed in accordance with AISE except for the trolley brake and are rated at 100% of full motor torque for the hoist brakes, 150% for the bridge brakes, and 50% for the trolley brakes. Each crane is tested per ANSI B30.2 at 125% of rated load, and each hook is tested at 200% of rated load.

Load movements are controllable to within 0.125 inch vertically and 0.6 inch horizontally from the operator's cab. Safety lugs are provided in the event of axle failure. Upper and lower geared limit switches are provided for each hoist, and track

limit switches are provided to prevent the trolley from powering into the end stops.

All structural steel is A36 or better.

The nominal speeds (±10%) of the main hoist, auxiliary hoist, trolley and bridge are 4.25, 25.50, 28.60, and 50 fpm, respectively. The main hoisting cables are 1.25 inches, 6 x 37 IWRC, with a breaking strength of 176,000 pounds. The hoist block contains seven sheaves. The auxiliary hoisting cables are 0.875 inch 6 x 37 IWRC, with a breaking strength of 87,600 pounds. The hoist block contains four sheaves.

The polar crane is designed such that no nuts, bolts, screws, etc., can fall into the refueling cavity or reactor vessel if they work loose.

New Fuel Elevator

The new fuel elevator (Figure 9.1-14) consists of a box-shaped elevator assembly with its top end open and sized to house one fuel assembly.

The new fuel elevator is used to lower new fuel to the bottom of the spent fuel pool. Once at the bottom, fuel is moved into the spent fuel storage racks with the long-handled spent fuel handling tool. The elevator is also used in conjunction with a dummy fuel assembly to lower thimble plugs to the bottom of the pool in a similar fashion. When utilizing top-nozzle reconstitution of irradiated fuel or similar procedures, the elevator will be equipped with suitable stops or interlocks and used to raise fuel assemblies to a working height. During these evolutions, the minimum required shielding depth (9 feet) and maximum allowable dose (4 mrem/hour) as delineated in Subsection 9.1.4.3.4 will remain in effect. No operation of the elevator with irradiated components or fuel is allowed if the transfer canal or cask loading pit is drained.

Fuel Transfer System

The fuel transfer system (FTS) (Figure 9.1-15) includes a cable-driven transfer car that runs on tracks extending from the refueling cavity through the transfer tube and into the fuel transfer canal. There is a hydraulically actuated lifting arm at each end of the transfer tube. The fuel container in the refueling cavity receives a spent fuel assembly in the vertical position from the refueling machine. The spent fuel assembly is then lowered to a horizontal position for passage through the transfer tube. After passing through the tube, the spent fuel assembly is raised to a vertical position

and removed from the container by a tool suspended from a hoist mounted on the spent fuel pool bridge crane. The spent fuel pool bridge crane then moves to a storage loading position and places the spent fuel assembly in the spent fuel storage racks.

During reactor operation, the transfer car is stored in the refueling canal. A blind flange is bolted to a tube surrounding the transfer tube on the containment end to seal the reactor containment. The terminus of the tube outside the containment is closed by a gate valve.

Fuel Handling Building Crane

The fuel handling building overhead crane handling system consists of an overhead, bridge-type crane and is equipped with a 125-ton main hoist and a 15-ton auxiliary hoist. The overhead crane handling system is used for lifting and transporting the spent fuel cask from the spent fuel pool cask loading area, to the cask decontamination area and to the FHB trackway. It is also used to lift and move other equipment located or stored in the fuel handling building. The maximum critical load (MCL) the overhead crane can handle is 125 tons.

The overhead crane meets the single-failure proof criteria of ASME NOG-1-2004; NUREG-0554: and NUREG-0612, Appendix C. The main hoist is classified as a Type I main hoist per ASME NOG-1-2004 - single-failure proof for loads up to 125 tons. The auxiliary hoist is single-failure proof up to 15 tons per NUREG-0554.

The fuel handling building crane is classified as Safety Class II equipment and is seismically analyzed. The crane is seismically designed such that it will maintain control of the MCL during a design basis seismic event (SSE).

Spent Fuel Assembly Handling Tool

The spent fuel assembly handling tool (Figure 9.1-16) is used to handle new and spent fuel assemblies in the fuel storage area. It is a manually actuated tool suspended from the spent fuel pool bridge crane which uses four cam-actuated latching fingers to grip the underside of the fuel assembly top nozzle. The operating handle which actuates the fingers is located at the top of the tool. When the fingers are latched, a pin is inserted into the operating handle which prevents the fingers from being accidentally unlatched during fuel handling operations.

New Fuel Assembly Handling Tool

The new fuel assembly handling tool (Figure 9.1-17) is used to lift and transfer fuel assemblies from the new fuel shipping containers to the fuel storage vaults or the new fuel elevator. The new fuel assembly handling tool is a manually actuated tool suspended from the fuel building crane and uses four cam-actuated latching fingers to grip the underside of the fuel assembly top nozzle. The operating handles which actuate the fingers are located on the side of tool. When the fingers are latched, the safety screw is turned in to prevent the accidental unlatching of the fingers.

Integral Reactor Vessel Head Assembly

The integral upper head cooling shroud is a system which combines the head lifting rig, seismic platform, lift columns, reactor vessel missile shield, control rod drive mechanism (CRDM) forced air cooling system, and electrical and instrumentation cable routing into an efficient, one-package reactor vessel head design.

Cooling Shroud Structure

The cooling shroud structure provides support for the CRDM cooling system fans and the stud tensioner hoists. Cooling air is directed through openings in the shroud, down along the mechanisms, back up the shroud through the CRDM cooling fans, and is finally exhausted upward into the containment atmosphere. Four fans are provided on the shroud to deliver the required flow. Two fans will provide the design flow rate, while the other two fans are held in reserve as standby spares that are available to service the CRDM. The shroud structure is bolted to a support ring on the reactor vessel head and is also attached to the three lift columns. The shroud also provides support for the CRDM power and instrumentation (reactor protection instrumentation and thermocouple) cables. Cables are routed from the mechanisms to the cable tray platform which is attached to the shroud. Connectors are provided on the platform so that the cable tray with the cables may be

easily removable. Access is also provided through the shroud for use of a thermocouple (T/C) column loading tool.

Missile Shield

The reactor vessel missile shield is used to prevent any postulated missiles from the reactor vessel head appendages from penetrating other reactor coolant system pressure boundaries and/or containment structure. In addition to this function, the missile shield also transfers the reactor vessel head load to the lifting rig. The missile shield also provides seismic support for the CRDMs. Attached to the three lift rods during plant operation, the missile shield has the ability to be properly leveled for the lift operation as well as to be easily detached from the lift rods to provide access to the control rod drive mechanisms.

Cable Tray

The cable tray is a structure which is attached to the cable tray platform on the cooling shroud and pivots on the steam generator wall or another appropriate support structure. The cable tray serves to support the power and instrumentation cables from the cable tray platform to the terminal boxes. It also provides a method of easily disassembling and storing the cables in preparation for head removal.

Stud Handling System

By providing the capability of handling studs independent of the main polar crane, the stud handling system permits more efficient and smoother stud handling. Studs and stud tensioners are handled by the hoists supported from a monorail on the shroud structure. Radial travel of studs and stud tensioners is also provided through transfer beam assemblies to improve the flexibility of stud movement.

Cable Support System

To provide a support system for the CRDM power and instrumentation (RPI and T/C) cables. Cables are routed from the mechanisms and T/C columns to the cable tray to the terminal boxes. Connectors would be provided on the cables so that the cable tray with the cables may be easily removable as desired.

Reactor Vessel Head Assembly Lifting Device

The reactor vessel head-lifting device consists of a welded and bolted structural steel frame with suitable rigging to enable the crane operator to lift the head and store it during refueling operations. The lifting device is permanently attached to the reactor vessel head.

Reactor Internals Lifting Device

The reactor internals lifting device (Figure 9.1-18) is a structural frame suspended from the overhead crane. The frame is lowered onto the guide tube support plate of the internals and is mechanically connected to the support plate by three breech-lock-type connectors. Bushings on the frame engage guide studs in the vessel flange to provide guidance during removal and replacement of the internals package.

Reactor Vessel Stud Tensioner

The stud tensioners (Figure 9.1-19) are employed to secure the head closure joint at every refueling. The stud tensioner is a hydraulically operated device that uses oil as the working fluid. The device permits preloading and unloading of the reactor vessel closure studs at cold shutdown conditions. Stud tensioners minimize the time required for the tensioning or unloading operation. Tensioners are provided and are applied simultaneously to studs located 120° apart. A single hydraulic pumping unit operates the tensioners, which are hydraulically connected in series. The studs are tensioned to their operational load in two steps to prevent high stresses in the flange region and unequal loadings in the studs. Relief valves on each tensioner prevent overtensioning of the studs due to excessive pressure.

9.1.4.3 Safety Evaluation

9.1.4.3.1 Safe Handling

Design Criteria for the Fuel Handling System

1. The primary design requirement of the equipment is reliability. A conservative design approach was used for all load-bearing parts. Where possible, components were used that have a proven record of reliable service. Throughout the design, consideration was given to the fact that the equipment will spend long idle periods stored in an atmosphere of 120° F and high humidity. The refueling machine control console and motor control center can be removed from containment between refueling outages.

2. Except as otherwise specified, the refueling machine and spent fuel pool bridge crane were designed and constructed in accordance with Crane Manufacturer Association of America (CMAA) Specification No. 70.

3. Design load for the refueling machine and spent fuel pool bridge crane shall be normal dead and live loads plus maximum hoist load.

4. The allowable stresses for the refueling machine and spent fuel pool bridge crane structures supporting the weight of the fuel shall be as specified in Subarticle XVII-2200 of

Appendix XVII of the ASME Code Section III (1974), or AISC Steel Construction Manual.

Hoisting components loaded in simple tension shall have an allowable stress of 0.20 ultimate stress maximum. Two cables are used: each shall be assumed to carry one-half the load.

5. All components critical to the operation of the equipment or located so that parts can fall into the reactor shall be assembled with the fasteners positively restrained from loosening under vibration.

Industrial Codes and Standards Used in the Design of the Fuel Handling Equipment

1. Refueling Machine and Spent Fuel Pool Bridge Crane: Applicable sections of Crane Manufacturer Association of America Specification No. 70.

2. Structural: a. AISC Steel Construction Manual (for the refueling machine), which is equivalent to ASME Code, Section III, Appendix XVII, Subarticle XVII-2000, 1974 Edition; and b. ASME Code, Section III, Appendix XVII, Subarticle 2200 (for the spent fuel pool bridge crane); and c. AWS D1.1/D1.1M:2006, Structural Welding Code-Steel (for overhead crane single-failure proof trolley).

3. Electrical: Applicable standards and requirements of IEEE 279, National Electrical Code, National Fire Protection Association (NFPA) 70, and National Electrical Manufacturers Association (NEMA) Standards MGI and ICS shall be used in the design, installation, and manufacturing of all electrical equipment.

4. Materials: Materials conform to the specifications of ASTM standards.

5. Safety: The applicable requirements of section 1910.179 of Subpart N of the Occupational Safety and Health Act (OSHA) code, the requirements of ANSI N.18.2, Regulatory Guide 1.29 and General Design Criteria 61 and 62.

6. Mechanical (for the FHB crane trolley): a. ASME NOG-1-2004, Rules for Construction of Overhead and Gantry Cranes (Top Running Bridge, Multiple Girder) - for overhead crane single-failure proof trolley.

Refueling Machine

The refueling machine design includes the following provisions to ensure safe handling of fuel assemblies:

a. Electrical Interlocks

1. Bridge, Trolley and Hoist Drive Mutual Interlocks

Bridge, trolley and winch drives are mutually interlocked using redundant interlocks to

prevent simultaneous operation of any two drives and can therefore withstand a single failure.

2. Bridge Trolley Drive - Gripper Tube Up

   Bridge and trolley drive full speed operation is prevented except when the gripper tube up position switches are actuated. The interlock is redundant and can withstand a single failure. Off-index inching allows the bridge and trolley to be moved at approximately 3 fpm with the gripper above the top of the core or the fuel assembly above the lower guide pins.

3. Gripper Interlock

   An interlock is supplied which prevents the opening of a solenoid valve in the air line to the gripper except when less than 1200 pounds suspended weight is indicated by a force gauge. As backup protection for this interlock, the mechanical weight-actuated lock in the gripper prevents operation of the gripper under load even if air pressure is applied to the operating cylinder. This interlock is redundant and can withstand a single failure.

4. Excessive Suspended Weight

   Two excessive suspended weight switches open the hoist drive circuit in the up direction to protect the fuel assembly and the refueling machine. The first switch is set to open the hoist drive circuit in the up direction, if the suspended weight is in excess of 2850 pounds (approximately 110% of the combined weight of a fuel assembly, RCCA and the gripper mast). The second switch is set to open the hoist drive circuit in the up direction if the load is in excess of 3400 pounds (approximately 125% (3200±200) of the combined load of a fuel assembly, RCCA and the gripper mast).

5. Hoist-Gripper Position Interlock

   An interlock in the hoist drive circuit in the up direction permits the hoist to be operated only when either the open or closed indicating switch on the gripper is actuated. The hoistgripper position interlock consists of two separate circuits that work parallel such that one circuit must be closed for the hoist to operate. If one or both interlocking circuits fail in the closed position, an audible and visual alarm on the console is actuated. The interlock is therefore not redundant but can withstand a single failure, since both an

interlocking circuit and the monitoring circuit must fail to cause a hazardous condition.

b. Bridge and Trolley Hold-Down Devices

Both refueling machine bridge and trolley are horizontally restrained on the rails by two pairs of guide rollers, one pair at each wheel location on one truck only. The rollers are attached to the bridge truck and contact the vertical faces on either side of the rail to prevent horizontal movement. Vertical restraint is accomplished by antirotation bars located at each of the four wheels for both the bridge and trolley. The antirotation bars are bolted to the trucks and, for the bridge restraints, extended under the rail flange. For the trolley restraints they extend beneath the top flange of the bridge girder which supports the trolley rail. Both horizontal and vertical restraints are adequately designed to withstand the forces and overturning moments resulting from the safe shutdown earthquake.

c. Design Load

The design load for structural components supporting the fuel assembly is the dead weight plus 4500 pounds (approximately 3 times the fuel assembly weight).

d. Main Hoist Braking System

The main hoists are equipped with two independent braking systems. A solenoid release-springset electric brake is mounted on the motor shaft. This brake operates in the normal manner to release upon application of current to the motor and set when current is interrupted. The second brake is a mechanically actuated load brake internal to the hoist gear box that sets if the load starts to overhaul the hoist. It is necessary to apply torque from the motor to raise or lower the load. In raising, this motor cams the brake open; in lowering, the motor slips the brake, allowing the load to lower. This brake actuates upon loss of torque from the motor for any reason and is not dependent on any electrical circuits. On the main hoist, the motor brake and the mechanical brake are rated at the capacity of the hoist.

e. Fuel Assembly Support System

The main hoist system is supplied with redundant paths of load support such that failure of any one

component will not result in free fall of the fuel assembly. Two wire ropes are anchored to the winch drum and carried over independent sheaves to a load-equalizing mechanism on the top of the gripper tube. In addition, supports for the sheaves and equalizing mechanism are backed up by passive restraints to pick up the load in the event of failure of this primary support. Each cable system is designed to support 13,750 pounds or 27,500 pounds acting together.

The working load of the fuel assembly plus the gripper is approximately 2500 pounds.

The gripper itself has four fingers gripping the fuel, any two of which will support the fuel assembly weight.

The gripper mechanism contains a spring-actuated mechanical lock which prevents the gripper from opening unless the gripper is under a compressive load.

During each refueling outage and prior to removing fuel, the gripper and hoist system are routinely load tested to 3563 pounds.

Fuel Transfer System

The following safety features are provided for in the fuel transfer system:

a. Carriage Transfer Permissive

Transfer carriage controls are located in the fuel storage area and containment. Transfer carriage operation is only possible when both lifting arms are in the down position as indicated by the limit switches. The automatic carriage traverse may only be initiated by the operator in visual contact with the upender, providing a backup for the lift arm interlock. The interlock can therefore withstand a single failure.

THIS PAGE HAS BEEN DELETED INTENTIONALLY

b. Lifting Arm - Transfer Carriage Position

Two redundant interlocks allow lifting arm operation only when the transfer car is at the respective end of its travel and can therefore withstand a single failure.

Of the two redundant interlocks which allow lifting arm operation only when the transfer car is at the end of its travel, one interlock is a position limit switch in the control circuit. The backup interlock is a mechanical latch device on the lifting arm that is opened by the car moving into position.

c. Transfer Carriage - Valve Open

An interlock on the transfer tube valve permits transfer car operation only when the transfer tube valve position switch indicates the valve is fully open.

d. Transfer Carriage - Lifting Arm

The transfer carriage lifting arm is primarily designed to protect the equipment from overload and possible damage if an attempt is made to move the car when the fuel container is in the vertical position. This interlock is redundant and can withstand a single failure. The basic interlock is a position limit switch in the control circuit. The backup interlock is a mechanical latch device that is opened by the weight of the fuel container when in the horizontal position.

e. Lifting Arm - Refueling Machine

The refueling cavity lifting arm is interlocked with the refueling machine. Whenever the transfer car is located in the refueling cavity, the lifting arm cannot be operated unless the refueling machine mast is in the fully retracted position (gripper up disengaged or gripper tube up) or the refueling machine is over the core.

f. Lifting Arm - Spent Fuel Pool Bridge Crane

The lifting arm is interlocked with the spent fuel pool bridge crane. The lifting arm cannot be operated unless the spent fuel pool bridge crane is not over the lifting arm area.

Spent Fuel Pool Bridge Crane

The spent fuel pool bridge crane includes the following safety features:

a. The spent fuel pool bridge crane hoist is interlocked to prevent operation if the trolley or bridge is in motion. The trolley/bridge control is interlocked to prevent operation if the hoist is in motion.

b. The bridge and trolley drive speed is reduced to less than 10 fpm when the hoist is not in the full up position with a load greater than 1200 pounds (weight of a fuel assembly).

c. An overload protection device is included on the hoist to limit the uplift force which could be applied to the spent fuel storage racks. The protection device limits the hoist load to 100% (4000 pounds) of the rated 2-ton hoist capacity and can withstand a single failure.

d. The design load on the hoist is the weight of one fuel assembly (approximately 1600 pounds), weight of one failed fuel container (approximately 1000 pounds), and the weight of the tool, which gives it a total weight of approximately 3000 pounds.

e. Restraining bars are provided on each truck to prevent the bridge from overturning.

f. Two independent wire ropes support the load and can withstand single failure.

g. The spent fuel pool bridge crane is equipped with two independent hoist systems that are designed to prevent simultaneous operation.

h. Each spent fuel pool bridge crane hoist system is equipped with a load-sensing monitor (load weight). This monitor provides the operator with continuous digital indication.

i. If an underload condition is detected while moving the spent fuel assembly, the hoist comes to a complete stop and the "UNDERLOAD" message is displayed on the main control touch screen and applicable pendant.

j. If an overload condition is detected while moving the spent fuel assembly, the hoist comes to a complete stop and the "OVERLOAD" message is displayed on the main control touch screen and applicable pendant.

k. During spent fuel handling operations, inputs from the inactive pendant will be ignored with the exception of the EMERGENCY STOP, which will stop all bridge, trolley and hoist movement.

Fuel Handling Tools and Equipment

All fuel handling tools and equipment handled over an open reactor vessel are designed to prevent inadvertent decoupling from machine hooks (i.e., lifting rigs are pinned to the machine hook, and safety latches are provided on hooks supporting tools).

Tools required for handling internal reactor components are designed with fail-safe features that prevent disengagement of the component in the event of operating mechanism malfunction. These safety features apply to the following tools:

a. Control rod drive shaft unlatching tool: The air cylinders actuating the gripper mechanism are equipped with backup springs which close the gripper in the event of loss of air to the cylinder. Air operated valves are equipped with safety locking rings to prevent inadvertent actuation.

b. Spent fuel handling tool: When the fingers are latched, a pin is inserted into the operating handle and prevents inadvertent actuation. The tool weighs approximately 385 pounds and is preoperationally tested at 125% percent the weight of one fuel assembly (approximately 1600 pounds).

c. New fuel assembly handling tool: When the fingers are latched, a safety screw is screwed in, preventing inadvertent actuations. The tool weighs approximately 100 pounds and is preoperationally tested at 125% the weight of one fuel assembly (approximately 1600 pounds).

9.1.4.3.2 Seismic Considerations

The safety classifications for all fuel handling and storage equipment are listed in Table 3.2-1. These safety classes provide criteria for the seismic design of the various components. Seismic Category I equipment is designed to withstand the forces of the Operating-Basis Earthquake (OBE) and Safe Shutdown Earthquake (SSE). For normal conditions plus OBE loadings, the resulting stresses are limited to allowable stresses as defined in the ASME Code, Section III, Appendix XVII, Subarticle XVII-2200 for normal and upset conditions. For normal conditions plus SSE loadings, the stresses are limited to within the allowable values given by Subarticle XVII-2100 for critical parts of the equipment which are required to maintain the capability of the equipment to perform its safety function. Permanent deformation is allowed for the loading combination which includes the SSE to the extent that there is no loss of safety function.

For Seismic Category II equipment, design for the SSE is considered if failure might adversely affect a Seismic Category I, Quality Group A, B, or C component. Permanent deformation is allowed for the loading combination that includes the SSE to the extent there is no adverse effect on any Seismic Category I component.

9.1.4.3.3 Containment Pressure Boundary Integrity

The fuel transfer tube which connects the refueling cavity (inside the reactor containment) and the fuel transfer canal (outside the containment) is closed on the refueling canal side by a blind flange at all times except during refueling operations. Two seals are located around the periphery of the blind flange with leak-check provisions between them.

9.1.4.3.4 Radiation Shielding

During all phases of spent fuel transfer, the gamma dose rate at the surface of the water should be less than or equal to an administrative limit of 4 mrem/hr above background. This is accomplished by maintaining a minimum of 9 feet of water above the top of the active region of the fuel assembly during all normal handling operations.

Three fuel handling devices are used to lift spent fuel assemblies. These are the refueling machine, spent fuel pool bridge crane, and the new fuel elevator. The refueling machine contains positive stops, which prevent the top of the active region of the fuel assembly from being raised close to the surface of the water. The hoists on the spent fuel pool bridge crane move fuel assemblies with a long-handled tool. Hoist travel and tool length limit the maximum lift of a fuel assembly such that at least 9 feet of water remain above the active region of the fuel. During operations with irradiated fuel or other components, the new fuel elevator has stops installed which also restrict the height to which these components may be lifted.

9.1.4.4 Inspection and Testing Requirements

The test and inspection requirements for the equipment in the fuel handling system are as follows:

a. Spent Fuel Pool Bridge Crane, Refueling Machine, RCC Change Fixture and New Fuel Elevator

   The minimum acceptable test at the shop site included the following:

   1. Hoists and cable shall be load tested at 125% of the rated load.

   2. The equipment shall be assembled and checked for proper functional and running operation.

The equipment manufacturers recommendations and station practices are considered in determining required maintenance.

b. Head Lifting Rig and Internals Lifting Rig

The minimum acceptable test at the shop site included the following:

1. The rigs shall be load tested to 125% of the rated load.

2. The rigs shall be assembled to ensure proper component fitup.

The equipment manufacturers recommendations and station practices are considered when determining required maintenance.

c. New Fuel Assembly Handling Tool and Spent Fuel Assembly Handling Tool

The minimum acceptable test at the shop site included the following:

1. The tools shall be load tested to 125% of the rated load.

2. The tools shall be assembled and checked for proper functional operation.

The equipment manufacturers recommendations and station practices are considered when determining required maintenance.

d. Fuel Transfer System

The minimum acceptable test at the shop site include assembly and check for proper function and running operation.

The equipment manufacturers recommendations and station practices are considered when determining required maintenance.

e. Reactor Vessel Stud Tensioner

The minimum acceptable test at the shop included the following:

1. The tensioner shall be assembled and checked for proper functional and running operation.

The equipment manufacturers recommendations and station practices are considered when determining required maintenance.

9.1.4.5 Instrumentation Requirements

The control systems for the refueling and spent fuel pool bridge crane and fuel transfer system are discussed in Subsection 9.1.4.2.2. A discussion of additional electrical controls for the FHS, such as the interlocks and main hoist braking system, can be found in Subsection 9.1.4.3.1.

9.1.5 Control of Heavy Loads

9.1.5.1 Introduction/Licensing Background

In response to the request for information relative to NRC Generic Letter 80-113 "Control of Heavy Loads," Byron and Braidwood Stations submitted the requested information to the NRC providing specific responses associated with NUREG 0612, "Control of Heavy Loads at Nuclear Power Plants," in References 52a through 52d.

The information relative to NUREG 0612, Section 5.1.1 (Phase I) was reviewed by the NRC, with the results of this review documented in References 53a and 53c. Subsequently, as discussed in References 53b and 53c, the NRC completed its review of a sample of submittals related to NUREG 0612, Section 5.1.2 thru 5.1.4 (Phase II) and determined that no further actions were required regarding Phase II.

In response to NRC Bulletin 96-02, Byron and Braidwood provided confirmation in Reference 54, that all heavy load handling activities that were planned at that time were within existing regulatory guidelines. Furthermore, the responses indicated that if any subsequent activities that identified an unreviewed safety question per the provisions of 10 CFR 50.59, a license amendment request would be submitted.

Maintenance and administrative procedures provide the necessary controls for the handling of heavy loads at Byron and Braidwood Stations such that the requirements of NUREG 0612 are met in accordance with the previously submitted documents.

9.1.5.2 Safety Basis

The risk associated with handling of heavy loads at Byron and Braidwood Stations is acceptably low based on compliance with the NUREG 0612 Section 5.1.1 (Phase I) requirements.

For movement of the reactor vessel closure head, a load drop evaluation concluded that the structural integrity of the reactor vessel nozzles and core cooling is maintained following a head drop event (Reference 50).

9.1.5.3 Scope of Heavy Load Handling Systems

Table 9.1-7 provides the list of Byron and Braidwood load handling equipment that has been determined to be within the scope of NUREG 0612 Section 5.1.1 (Phase I).

9.1.5.4 Control of Heavy Loads Program

The Control of Heavy Loads Program consists of the following:

1) Licensee commitments in response to NUREG 0612, Phase I elements
2) For Reactor Pressure Vessel Head lifts
   a) EITHER a load drop analysis with assumptions (lift height, load weight, medium present) from the head drop analysis incorporated into plant procedures.
   b) OR single failure proof crane (or equivalent) with justification.
3) For spent fuel cask lifts over the spent fuel pool, either a load drop analysis OR single failure proof crane.

The sections that follow provide details of these aspects of the Byron and Braidwood Control of Heavy Loads Program.

9.1.5.4.1 Byron and Braidwood Station Commitments in Response to NUREG 0612, Phase I Elements

For cranes that are within the scope of NUREG 0612, seven elements must be met as described in NUREG 0612, Section 5.1.1 commonly known as Phase I ["…Accordingly, all plants should satisfy each of the following for handling heavy loads that could be brought in proximity to or over safe shutdown equipment or irradiated fuel in the spent fuel pool area or containment (PWRs), in the reactor building (BWRs), and in other plant areas."]

These seven elements of Phase I have been implemented at Byron and Braidwood Stations as follows:

9.1.5.4.1.1 Safe Load Paths

Safe load paths have been defined at Byron and Braidwood Stations for the handling of heavy loads (utilizing the load handling equipment identified in Tables 9.1-7), which, if dropped could impact irradiated fuel or safe shutdown equipment. Deviations from defined load paths will require alternative procedures approved by the plant operations review committee. Load paths are not defined for loads less than 2,000 lbs., however, they typically follow the safest and shortest route with the load as close to the floor as practical.

Procedures for heavy load movement inside containment incorporate Quality Control or Quality Assurance hold points as necessary and provide independent verification of proper load paths. Load movements will be directed by the responsible Maintenance Supervisor.

Administrative procedures describe the job responsibility of the person directing the heavy load movement.

9.1.5.4.1.2 Load Handling Procedures

Procedures have been developed to cover load handling operations for the heavy loads identified in Table 3.1-1 of NUREG 0612 at Byron and Braidwood Stations. These procedures identify the required equipment, the inspections and acceptance criteria prior to load movement, the steps and sequence in handling the load and define the safe load path and other special precautions.

9.1.5.4.1.3 Qualifications, Training, and Conduct of Crane Operators

Byron and Braidwood Stations comply with ANSI B30.2-1976 with respect to operator training, qualification and conduct.

9.1.5.4.1.4 Special Lifting Devices

The special lifting devices employed at Byron and Braidwood Stations have been designed in accordance with industrial standards using good engineering practices. The special lifting devices for the reactor vessel head and upper internals have been provided by Westinghouse. The fabrication of these lifting devices used standard quality control procedures. Both lifting rigs have been designed for 200% of the dead load using AISC allowables and load tested to 125% of their rated load.

Prior to use of specially designed lifting assemblies, visual inspection is performed and certain critical and accessible parts or members such as hooks and pins is non-destructively examined at appropriate time intervals.

Should an incident occur in which a special lifting device is overloaded, damaged or distorted, an engineering assessment is performed. This assessment addresses ANSI N14.6 and includes consideration of the load test up to the original procurement load test value or 150%, whichever is less.

9.1.5.4.1.5 Lifting Devices Not Specially Designed

Byron and Braidwood Stations procure and inspect slings to ANSI B30.9-1971. Inspections are conducted annually and examined visually prior to use. Slings are installed and used in accordance with ANSI B30.9-1971. All lifting devices were designed according to industrial standards using good engineering practices.

The dynamic loads generated by cranes and hoists at Byron and Braidwood Station are reasonably small percentages of the overall static load and, therefore, may be disregarded when selecting slings. Slings are not restricted to special cranes.

9.1.5.4.1.6 Inspection and Testing of Cranes

Cranes at Byron and Braidwood Stations are inspected, tested, and maintained in accordance with Chapter 2-2 of ANSI B30.2-1976, with the exception that test and inspections are performed prior to use where it is not practical to meet the frequencies of ANSI B30.2. For cranes having limited usage, the inspections and tests are performed prior to their use.

9.1.5.4.1.7 Crane Design

The polar cranes and fuel handling building cranes were designed in accordance with the 1975 Revision of CMAA-70 and the AISC specifications for those portions not covered by CMAA-70. Welding was performed in accordance with AWS D.1.1.

The trolley beams were designed and fabricated in accordance with AISC-1978 standards. The PTS and single girder systems (SG) were designed in accordance with MMA and AISC-1978 standards. The jib cranes were designed and fabricated according to AISC-1978 standards.

The polar cranes, turbine building cranes and fuel handling cranes were all designed and fabricated in accordance with CMAA70 1975 Revision and ANSI B30.2-1976.

The polar crane is provided with limit switches for bridge overtravel, plus two upper and one lower limit switch for each hoist. Mechanical end stops are also provided on the bridge.

The fuel handling building crane is provided with end stops on the runways and bridge, plus upper and lower limit switches on both hoists.

9.1.5.4.2 Reactor Pressure Vessel Head (RPVH) Lifting Procedures

Once the plant is in operation, the only critical loads carried by the polar crane are the reactor vessel head, and upper and lower internals which are carried during refueling. There are no other loads which, if dropped, would affect the cooling of the reactor or fuel integrity. When carrying the reactor vessel head, the operator is restricted in movement to the north-south directions by the high walls enclosing the steam generators. The head must, therefore, be dropped on the reactor vessel to affect reactor cooling or fuel integrity.

The results of a load drop analysis for the RESAR-414 docket were provided in WCAP-9198, "Reactor Vessel Head Drop Analyses," originally issued in 1978. The load drop analysis provided in WCAP-9198 is similar to an NRC approved load drop evaluation performed for the Westinghouse RESAR-41 Standard Nuclear Steam Supply System (Reference 48). A Byron and Braidwood load drop evaluation was performed using the same assumptions and methodology used in the RESAR-41 analysis and WCAP-9198 (Reference 49). The effect of the refueling cavity water level was also included in this analysis.

The Byron and Braidwood load drop evaluation concluded that the structural integrity of the reactor vessel nozzles and core cooling is maintained following a head drop event (Reference 50).

The procedures for lifting the Byron and Braidwood reactor head include restrictions on lift height, weight and medium present under the head during the lift. These values reflect the parameters considered in the head drop analysis described above.

9.1.5.4.3 Single Failure Proof Cranes for Spent Fuel Casks

Refer to section 9.1.2.2 and section 15.7.5 for the handling of a Spent Fuel Cask.

9.1.5.5 Safety Evaluation

The overhead handling of heavy loads at Byron and Braidwood Stations is conducted in a safe manner through the use of safe load paths, qualified operators and adequately designed and maintained load handling equipment.

These controls as implemented by NUREG 0612 "Control of Heavy Loads at Nuclear Power Plants," Section 5.1.1 (Phase I), ensure that the risk of a load drop accident is low.

In the event of a postulated load drop for the reactor vessel head, a load drop analysis has determined that the consequences of this event are acceptable. Restrictions for load height, weight and medium present are procedurally controlled for this activity to ensure the analysis remains valid.

Requirements to ensure that the handling of heavy loads is performed in a safe manner and that the risk associated with these activities is adequately evaluated are provided in station procedures that control these activities.

9.1.6 References

1. Letter from B.K. Grimes of NRC to All Power Reactor Licensees, "OT Position for Review and Acceptance of Spent Fuel Storage and Handling Applications," dated April 14, 1978.

2. Ford III, W. E., "CSRL-V: Processed ENDF/B-V 227-Neutron-Group and Pointwise Cross-Section Libraries for Criticality Safety, Reactor and Shielding Studies," ORNL/CSD/TM-160, June 1982.

3. Green, N. M., NITAWL-II: Scale System Module for Performing Resonance Shielding and Working Library Production, NUREG/CR-0200, Volume 2, Section F2, June 1989.

4. Petrie, L. M., and Landers, N. F., KENO Va "An Improved Monte Carlo Criticality Program With Supergrouping," NUREG/CR-0200, Volume 2, Section F-11, November 1993.

5. Nordheim, T. W., "The Theory of Resonance Absorption," Proceeding of Symposia I Applied Mathematics, Vol XI, p. 58, Garrett Birkhoff and Eugene Wigner, Am. Math Soc., 1961.

6. Baldwin, M. N., Critical Experiments Supporting Close Proximity Water Storage of Power Reactor Fuel, BAW-1484-7, July 1979.

7. Bierman, S. R., and Clayton, E. D., Criticality Separation Between Subcritical Clusters of 2.35 wt% U-235 Enriched UO2 Rods in Water with Fixed Neutron Poisons, PNL-2438, October 1977.

8. Bierman, S. R., and Clayton, E. D., Criticality Separation Between Subcritical Clusters of 4.29 wt% U-235 Enriched UO2 Rods in Water with Fixed Neutron Poisons, PNL-2615, August 1979.

9. Bierman, S. R., and Clayton, E. D., Criticality Separation Between Subcritical Clusters of 4.31 wt% U-235 Enriched UO2 Rods in Water at a Water-to-Fuel Volume Ratio of 1.6, PNL-3314, July 1980.

10. Thomas, J. T., Critical Three-Dimensional Arrays of U(93.2) Metal Cylinders, Nuclear Science and Engineering, Volume 52, pages 350-359, 1973.

11. Mueller, D. E., Boyd, W. A., and Fecteau, M. W., (Westinghouse NFD), Qualification of KENO Calculations with ENDF/B-V Cross Sections, American Nuclear Society Transactions, Volume 56, pages 321-323, June 1988.

12. Nguyen, T. Q., Qualification of the PHOENIX-P/ANC Nuclear Design System for Pressurized Water Reactor Cores, WCAP-11596-P-A, June 1988.

13. Davidson, S. L., et al., VANTAGE 5 Fuel Assembly Reference Core Report, Addendum 1, WCAP-10444-P-A, March 1986.

14. England, T. R., CINDER, "A One-Point Depletion and Fission Product Program," WAPD-TM-334, August 1962.

15. Melehan, J. B., Yankee Core Evaluation Program Final Report, WCAP-3017-6094, January 1971.

16. Boyd, W. A., and Mueller, D. E., (Westinghouse NFD), Effects of Poison Panel Shrinkage and Gaps on Fuel Storage Rack Reactivity, American Nuclear Society Transactions, Volume 56, pages 323-324, June 1988.

17. Not used.

18. Not used.

19. Not used.

20. USNRC Standard Review Plan, NUREG-0800 (1981).

21. Rabinowicz, E., "Friction Coefficients of Water Lubricated Stainless Steels for a Spent Fuel Rack Facility," MIT, a report for Boston Edison Company, 1976.

22. Levy, S., and Wilkinson, J. P. D., "The Component Element Method in Dynamics with Application to Earthquake and Vehicle Engineering," McGraw Hill, 1976.

23. Clough, R. W., and Penzien, J., "Dynamics of Structures," McGraw Hill (1975).

24. Singh, K. P., and Soler, A. I., "Mechanical Design of Heat Exchangers and Pressure Vessel Components," Chapter 16, Arcturus Publishers, Inc., 1984.

25. Fritz, R. J., "The Effects of Liquids on the Dynamic Motions of Immersed Solids," Journal of Engineering for Industry, Trans. of the ASME, February 1972, pp 167-172.

26. Singh, K. P., and Soler, A. I., "Dynamic Coupling in a Closely Spaced Two-Body System Vibrating in Liquid Medium: The Case of Fuel Rack,"3rd International Conference on Nuclear Power Safety, Keswick, England, May 1982.

27. Blevens, R. D., "Flow Induced Vibration," VanNostrand (1977).

28. M. C. Potter and J. F. Foss, "Fluid Mechanics," Ronald Press, p 459 (1975).

29. NUREG-0800 U. S. Nuclear Regulatory Commission, Standard Review Plan, Branch Technical Position ASB9-2, Rev. 2, July 1981.

30. Singh, K. P., "Some Fundamental Relationships for Tubular Heat Exchanger Thermal Performance," Journal of Heat Transfer, Fundamental Transactions of the ASME, Vol. 103, August 1981.

31. Letter from K. A. Ainger of CECo to H. R. Denton of NRC, dated March 11, 1987.

32. "Criticality Analysis of Byron and Braidwood Station High Density Fuel Racks," Rev. 1, NRC Docket No. 50-454/455 and 50-456/457, Commonwealth Edison Company, Chicago, Illinois, August 14, 1989.

33. Fecteau, M. W., et al., "Criticality Analysis of the Byron/Braidwood Fresh Fuel Racks," June 1989.

34. Newmyer, W. D., et al., "Byron and Braidwood Spent Fuel Rack Criticality Analysis Considering Gaps and Shrinkage," 94CB*-G-0091, June 1994.

35. Lam, H. Q., et al., "Byron and Braidwood Spent Fuel Rack Criticality Analysis Using Soluble Boron Credit," 97CB-G-0083, May 1997.

36. WCAP-14416-NP-A, "Westinghouse Spent Fuel Rack Criticality Analysis Methodology," Revision 1, November 1996.

37. "Design Temperature of Spent Fuel Pool," Calculation BRW-96-830-M/BYR97-128, Rev. 1, March 4, 1998.

38. "Evaluation of Spent Fuel Pool for Elevated Temperature," Calculation 8.1.12-BRW-96-754, Rev. 0, November 27, 1996.

39. "Criticality Evaluation for the Byron/Braidwood Rack Installation Project," Calculation (HI-982094), Rev. 2, July 12, 2000.

40. J.F. Briesmeister, Ed., "MCNP - A General Monte Carlo N-Particle Transport Code, Version 4A", Los Alamos National Laboratory, LA-12625-M (1993).

41. R.M. Westfall, et. Al., "NITAWL-S: Scale System Module for Performing Resonance Shielding and Working Library Production" in SCALE: A Modular Code System for Performing Standardized Computer Analyses for Licensing Evaluation., NUREG/CR-0200, 1979.

42. L.M. Petrie and N.F. Landers, "KENO Va. An Improved Monte Carlo Criticality Program with Subgrouping" in SCALE: A Modular Code System for Performing Standardized Computer Analyses for Licensing Evaluation., NUREG/V-0200, 1979.

43. A. Ahlin, M. Edenius, H. Haggblom, "CASMO- A Fuel Assembly Burnup Program", AE-RF-76-4158, Studsvik Report (proprietary)

44. M. Edenius et al., "CASMO4A, A Fuel Burnup Program, Users Manual" Studsvik Report SOA/95/1.

45. W.D. Newmyer and N.L. Domenico, "Fuel Rod Storage Canister Criticality Analysis", October 1994.

46. M.R. Breach, "KO-RI Unit No. 1 Damaged Fuel Storage Canisters: Thermal and Hydraulic Qualification Report", MED-RPV-643, February 1985.

47. Westinghouse memorandum STD-8.2.3-7084 with subject "Thermal/Hydraulic Analysis Fuel Rod Storage Baskets", March 26, 1987.

48. Letter from J. Stolz (U.S. NRC) to C. Eicheldinger (Westinghouse Electric Corporation), "Evaluation of Postulated Reactor Vessel Head Assembly Drop (RESAR-41)," dated November 1976.

49. WCAP-9198, "Reactor Vessel Head Drop Analysis," Revision 1, October 2004.

50. Analysis No. BYR08-067 / BRW-08-0059-S, "Byron/Braidwood Reactor Head Drop Analysis", Revision 1.

51. Westinghouse letter CCE-08-68 with subject "Spent Fuel Pool Demineralizer Flow Increase at Byron and Braidwood", dated April 17, 2008 (EC 372898).

52. NRC Correspondence

a. Letter from Commonwealth Edison to Director of Nuclear Reactor Regulation. Subject: Byron Station Units 1 and 2, Braidwood Station Units 1 and 2, dated April 7, 1982.

b. Letter from Commonwealth Edison to Director of Nuclear Reactor Regulation. Subject: Byron Station Units 1 and 2, Braidwood Station Units 1 and 2, Control of Heavy Loads,dated October 25, 1982.

c. Letter from Commonwealth Edison to Director of Nuclear Reactor Regulation. Subject: Byron Station Units 1 and 2, Braidwood Station Units 1 and 2, Supplemental Information to the resolution of "Control of Heavy Loads at Nuclear Power Plants," dated February 10, 1984.

d. Letter from Commonwealth Edison to Director of Nuclear Reactor Regulation. Subject: Byron Station Units 1 and 2, Braidwood Station Units 1 and 2, Supplemental Information to the resolution of "Control of Heavy Loads at Nuclear Power Plants," April 11, 1984.

53. Safety Evaluation Reports

a. Supplement No.5 to the Safety Evaluation Report related to the operation of Byron Station, Units 1 and 2 (SSER 5)

b. Supplement No.6 to the Safety Evaluation Report related to the operation of Byron Station, Units 1 and 2 (SSER 6)

c. Supplement No.1 to the Safety Evaluation Report related to the operation of Braidwood Station, Units 1 and 2 (SSER 1)

54. Letter from ComEd to NRC dated May 13, 1996: Commonwealth Edison Company Response to NRC Bulletin 96-02, "Movement of Heavy Loads Over Spent Fuel, Over Fuel in the Reactor Core, or Over Safety-Related Equipment," dated April 11, 1996

55. Holtec Report (FSAR) No. HI-2002444, "Holtec International Final Safety Analysis Report for the HI-STORM 100 Cask System", revision 7, dated August 9, 2008.

TABLE 9.1-1

SPENT FUEL POOL COOLING SYSTEM

DESIGN PARAMETERS

Spent fuel pool storage capacity (Byron only)	2,984 fuel assemblies
Spent fuel pool storage capacity (Braidwood only)	2964 fuel assemblies
Spent fuel pool water volume, gallons*	589,450
Nominal boron concentration of the spent fuel pool water, ppm	2,300
Normal refueling discharge case:	
Decay heat production, MBtu/hr	38.5
Spent fuel pool water temperature, °F	141**
Spent fuel pool water heat inertia (time to heat from 141°F to 212°F assuming no heat loss), hours	7.0
Full core discharge case:	
Decay heat production, MBtu/hr	61.4
Spent fuel pool water temperature (with one cooling train in operation), °F	163
Spent fuel pool water heat inertia (time to heat from 163°F to 212°F assuming no heat loss), hours	3.1

* Volume of spent fuel pool without racks or fuel assemblies.

** Considering the conservatism used in the analysis and that no credit was taken from evaporative heat loss, the actual pool temperature is not expected to reach 140°F for the one-third core offload.

TABLE 9.1-1a

LIST OF CASES ANALYZED

Case No.	Condition	No. of Fuel Assemblies Discharged, N	Total Time to Transfer Fuel Into the Pool t_h, hrs	Decay Time Before Transfer, Begins, hrs
1	Normal refueling discharge*	84	10.5	100
2	Full core discharge*	193	24.1	100
3	Back-to-back refueling*	277	+	100

* Discharge is assumed to be into a pool containing 2864 fuel assemblies from 34 previous discharges.

\+ 10.5 hours for first discharge (84 assemblies), 24.1 hours for second discharge (full cores).
17 days between the discharges and 6 months to the previous discharge.

TABLE 9.1-2

SPENT FUEL POOL COOLING SYSTEM COMPONENT DESIGN PARAMETERS

SPENT FUEL POOL PUMP	
Number	2
Design pressure, psig	150
Design temperature, °F	200
Design flow, gpm	4500
Total developed head, ft	150
Material	Stainless steel
SPENT FUEL POOL SKIMMER PUMP	
Number	1
Design pressure, psig	50
Design temperature, °F	200
Design flow, gpm	100
Total developed head, ft	50
Material	Stainless steel
REFUELING WATER PURIFICATION PUMPS	
Number	2
Design pressure, psig	150
Design temperature, °F	200
Design flow, gpm	150 and 250
Total developed head, ft	150 and 150
Material	Stainless steel

TABLE 9.1-2 (Cont'd)

SPENT FUEL POOL HEAT EXCHANGER		
Number	2	
Type	Shell and U-tube	
Design heat transfer, Btu/hr	16.0×10^6	
Required UA, Btu/hr/°F	2.1×10^6	
	Shell	Tube
Design pressure, psig	150	150
Design temperature, °F	200	200
Design flow, lb/hr	2.72×10^6	2.23×10^6
Inlet temperature, °F	105	120
Outlet temperature, °F	110.8	112.9
Fluid circulated	Component cooling water	Spent fuel pool water
Material	Carbon steel	Stainless steel
SPENT FUEL POOL DEMINERALIZER		
Number	2	
Type	Flushable, mixed bed	
Design pressure, psig	300	
Design temperature, °F	200	
Design flow, gpm	120*	
Resin volume, ft^3	30	
Material	Stainless steel	

*Reference 51 increased the flow limit to 180 gpm at Braidwood.

TABLE 9.1-2 (Cont'd)

SPENT FUEL POOL FILTER	
Number	2
Design pressure, psig	150
Design temperature, °F	200
Design flow, gpm	250
Material, vessel	Stainless steel
SPENT FUEL POOL SKIMMER FILTER	
Number	1
Design pressure, psig	300
Design temperature, °F	250
Rated flow, gpm	150
Material, vessel	Stainless steel
SPENT FUEL POOL STRAINER	
Number	2
Design temperature, °F	200
Rated flow, gpm	4500
Perforation, in.	Approximately 0.2
Material	Stainless steel

TABLE 9.1-2 (Cont'd)

SPENT FUEL POOL FLOATING SKIMMER (Byron Only)

Number	2
Design temperature, °F	200
Rated flow, gpm	50 – 150
Material	Stainless steel

SPENT FUEL POOL FLOATING SKIMMER (Braidwood Only)

Number	1
Rated flow, gpm	50 - 150
Material	Stainless steel

TABLE 9.1-3

MAXIMUM POOL BULK TEMPERATURE

Case No.	No. of Assemblies	Time to Transfer Fuel Into Pool, hrs	Maximum Pool Bulk Temp., t, °F	Notes
1	84	10.5	141	Normal discharge* (1 Hx)
2	193	24.1	163	Full core discharge* (1 Hx)
3	277	+	139	Abnormal discharge* (2 Hx)

* Discharge is assumed to be into a pool containing 2864 fuel assemblies from 34 previous discharges.

\+ 10.5 hours for first discharge; 24.1 hours for the second discharge; 17 days between first and second discharge and 6 months to the previous discharge.

TABLE 9.1-4

VAPORIZATION RATE FROM THE INSTANT ALL COOLING IS LOST

	Loss of Cooling at Maximum Pool Bulk Temperature and Maximum Power Discharge	
Case No.	Time (Hrs) To Boil	Vap. Rate (lb/hr)
1	7.0	39680
2	3.1	63210
3	3.8	75340

TABLE 9.1-5

MAXIMUM LOCAL POOL WATER TEMPERATURE AND LOCAL FUEL CLADDING TEMPERATURE AT INSTANT OF MAXIMUM POOL BULK TEMPERATURE

Maximum Local Water Temperature, °F	Maximum Local Fuel Cladding Temperature, °F
206.2	247.6

TABLE 9.1-6

This table has been intentionally deleted.

TABLE 9.1-7
HEAVY LOAD HANDLING SYSTEMS

Load Handling Equipment	Location	Capacity (tons)
Bridge Cranes		
Polar Cranes	Containment (Unit 1 & 2)	230/40
Turbine Building Cranes	Turbine Building (Unit 1 & 2)	150/25
Fuel Handling Building Crane	Fuel Handling Building	125/15
Spent Fuel Pool Bridge Crane	Fuel Handling Building	2
Trolley Beams		
23	Auxiliary Building	10
24 & 25	Auxiliary Building	12
42 (Braidwood Only)	Lake Screen House	12
53	Auxiliary Building	8
54	Auxiliary Building	8
Patented Track Systems (PTS)		
PTS-2 & PTS-3	Auxiliary Building	6
PTS-4 & PTS-5	Auxiliary Building	6
PTS-8 & PTS-9 (Braidwood Only)	Lake Screen House	30
Single Girder Cranes		
SG-1, SG-2,SG-3 & SG-4	Auxiliary Building	2
Other		
Cable Tray Drawbridge Winch	Containment (Unit 1 & 2)	10
Stud Tensioner Hoists	Containment (Unit 1 & 2)	2

TABLE 9.1-8

SPENT FUEL POOL BRIDGE CRANE PENDANT SCREEN PARAMETERS

ITEM	SCREEN DISPLAYED PARAMETER
1	**[HOIST POSITION]:** Numerical displayed value of the current hoist position (inches) from the PLC. The value follows the hoist elevation icon as it moves up and down the screen.
2	**[HOIST CLEAR/NOT CLEAR]:** Message indicating the Hoist is either clear or not clear for safe bridge and trolley movements.
3	**[HOIST LOAD]:** Numerical displayed value of the current hoist load in pounds.
4	**[FAULT]:** A General Message explaining that a fault occurred.
5	**[INTERLOCK OVERRIDE ACTIVE]:** Message indicating the Interlock Override is active.
6	**[E_STOP ACTIVE]:** Message indicating the EMERGENCY STOP is active.
7	**[SLACK CABLE]:** Message indicating Slack Cable.
8	**[UNDERLOAD]:** Message indicating a Hoist Underload.
9	**[OVERLOAD]:** Message indicating a Hoist Overload.
10	**[PLC MAX OVERLOAD]:** Message indicating a Hoist Maximum Overload.
11	**[EXTERNAL MAX OVERLOAD]:** Message indicating a Hoist Maximum Overload setpoint is detected.
12	**[ENCODER UP LIMIT]:** Message indicating the main hoist is at its Encoder Up Limit.
13	**[ENCODER DOWN LIMIT]:** Message indicating the main hoist is at its Encoder Down Limit.
14	**[HOIST UP LIMIT SWITCH]:** Message indicating main hoist up limit switch has closed and the main hoist is at Normal Up.
15	**[1900 LB. LOAD LIMIT]:** Message indicating that the PLC Max. Overload Limit is 1900 pounds.
16	**[BYRON/BRAIDWOOD]:** Message indicating at which plant the unit is installed.
17	**[UNIT 1/UNIT 2]:** Message indicating which hoist unit has been selected.
18	**[MAINTENANCE MODE]:** Message indicating that the unit is in Maintenance Mode.
19	**[FUEL MOVE MODE]:** Message indicating that the unit is in Fuel Movement Mode.

9.2 WATER SYSTEMS

9.2.1 Station Service Water System

Two service water systems are provided for the Station: (1) nonessential service water, supplying only those loads which are not safety-related and not essential to the safe shutdown of the reactor; and (2) essential service water, supplying only those loads which are safety-related or essential to the safe shutdown of the reactor, with the exception of the nonessential positive displacement charging pump cubicle cooler.

9.2.1.1 Nonessential Service Water System

The nonessential service water system is illustrated in Drawing M-43. Three 35,000 gpm pumps are provided to provide water to both units. Normally two pumps will be in operation with the third providing full capacity backup for either unit. Three 35,000 gpm strainers are provided downstream of the pumps. These may be used in any combination with the pumps to provide normal operation and full backup.

At Byron, the three nonessential service water pumps and three strainers are located in the circulating water pump house. The pumps take their suction from the pump house forebay. This bay is fed by a flume approximately 32 feet wide and 22 feet deep which connects the basins of the two natural draft cooling towers serving the two units.

At Braidwood, the three nonessential service water pumps and three strainers are located in the lake screen house, and take their suction from the screen house forebay.

The radiation monitoring provisions for detecting potential in-leakage of contaminated fluids is described in Section 11.5.

9.2.1.1.1 Safety Evaluation

The nonessential service water system is not safety-related since all essential loads, and those required for the safe shut-down of the reactor, are serviced by the essential service water system. Accordingly, the nonessential service water system is designated Safety Category II, Quality Group D. None of the loads serviced by this system affect the safety of the plant.

9.2.1.1.2 Tests and Inspections

Inspection of this system follows normal power plant rules of good practice, with no special requirements imposed.

9.2.1.1.3 Chemistry Control

The nonessential service water system is treated to control organic slime buildup. Corrosion and/or scale inhibitors are used. Silt dispersants are used at Braidwood.

9.2.1.2 Essential Service Water System

9.2.1.2.1 Design Bases

The essential service water system is illustrated in Drawings M-42, M-42A, M-900-7 (Byron), M-900-8 (Byron), M-906-6, M-906-7 (Braidwood), M-907-2 (Braidwood) and M-907-3. The essential service water system is designed to ensure that sufficient cooling capacity is available to provide adequate cooling during normal and accident conditions. The components served by essential service water for normal, LOCA, loss of offsite power (LOOP), or shutdown conditions are shown in Table 9.2-1.

The essential service water system is divided into two redundant loops for each unit. The system may be operated with the loops cross-tied or as two separate loops. Table 9.2-11 lists nominal design flows for the essential service water system. These nominal design flow rates are sufficient for all operating conditions, including normal operation, post-LOCA operation, and during a LOOP or normal shutdown. Typically, the flow rate specified is a nominal value based on maintaining a desired oil temperature or equipment temperature for long-term operation, and design margin exists between the specified flow rate and the flow rate required to remove the design heat load. Actual component flows vary depending on system alignments, mode of operation, and ambient conditions. In addition, either train can supply 990 gpm to the suction of the auxiliary feedwater pump of the same train. Refer to Subsection 10.4.9 for a discussion of the auxiliary feedwater system and this cross-tie.

All safety-related heat transfer equipment is designed for a 100°F essential service water inlet temperature. Heat rejection capacity of the essential service water system is discussed more fully in Subsection 9.2.5.

The SX System includes provisions to crosstie the Unit 1 and Unit 2 essential service water systems (opposite-unit crosstie). The crosstie flowpath along with an opposite-unit SX pump are capable of providing backup cooling in the event of a loss of all SX on one unit.

9.2.1.2.2 System Description

Each full-capacity essential service water loop in each unit is supplied by a single pump rated at 24,000 gpm at 180 feet ±10% total developed head. Actual system flow varies with system lineup and conditions. See Table 9.2-1 and Table 9.2-11 for the components served and the nominal rated component flows. The pumps are located on the lowest level of the auxiliary building to ensure the availability of sufficient NPSH. Emergency power is available to each pump from its respective ESF bus as shown in Table 8.3-5 and described in Subsection 8.3.1. At Byron, the suction supply is by one supply line running from each of the two redundant essential service mechanical draft cooling towers to the auxiliary building. Each supply line supplies one essential service water pump in each unit; each of the two pumps in a given

unit takes its suction from a separate supply line. At Braidwood, the suction supply is by two intake lines running from the Safety Category I portion of the lake screen house essential pond to the auxiliary building. Each intake line supplies one essential service water pump in each unit; each of the two pumps in a given unit takes its suction from a separate intake line.

The system, therefore, meets the single-failure criterion as shown in the analysis in Table 9.2-2 for Braidwood, and Tables 9.2-2 and 9.2-16 for Byron.

On each unit, the cross-tie header valves on the discharge of each pair of essential service water pumps are powered from sep-

arate ESF buses and are normally open. The suction line valves are each assigned to the same ESF bus as the pump with which it is associated. A cross-tie between the Unit 1 and Unit 2 essential service water systems can be established through the 1SX005 and 2SX005 valves.

At Byron, heat rejection from the essential service water system is to the essential service water cooling towers, both on a normal and on an emergency basis. The discharges from each loop in each unit are separate and fed to two separate and redundant return lines for return to the towers. The two discharges from each unit and the two return lines to the towers are arranged similar to the intakes, i.e., the two discharges from each unit run into separate return lines, and each return line is fed from one discharge from each unit. The single failure criterion is met as shown in Tables 9.2-2 and 9.2-16.

At Braidwood, heat rejection from the essential service water system is to the essential cooling pond, both on a normal and on an emergency basis. The discharges from each loop in each unit are separate and fed to two separate and redundant return lines for return to the pond. The two discharges from each unit and the two return lines to the pond are arranged similar to the intakes, i.e., the two discharges from each unit run into separate return lines, and each return line is fed from one of the two discharges from each unit. The single-failure criterion is met as shown in Table 9.2-2. The essential service water piping exiting the discharge structure in the cooling pond has been extended above the pond surface. This has been done to reduce the probability of cooling pond water from back flowing into the Auxiliary Building in the event of a non-design bases postulated break on a nonisolable portions of the SX system concurrent with a failure of the corresponding 0SX165A/B valves to close. Since the essential service water system is composed of moderate energy lines, pipe breaks are not postulated in design bases scenarios.

The essential cooling pond is more fully discussed in Subsection 9.2.5.

At Byron, the essential service water cooling towers are designed to accommodate the heat load from both units simultaneously under both normal and accident conditions. The essential service water cooling towers and their auxiliary systems are more fully discussed in Subsection 9.2.5.

9.2.1.2.3 Safety Evaluation

The entire essential service water system is designated Safety Category I, Quality Group C, including supply lines, pumps, and return lines with the exceptions identified in Table 3.2-1.

The essential service water supply and discharge lines are either below or incorporated in the turbine building base mat. They are not inside the turbine building and, the lines are adequately protected from any occurrence within the turbine building. The routing of this piping is shown in Drawings M-900-7 (Byron), M-900-8 (Byron), M-906-6, M-906-7 (Braidwood), M-907-2 (Braidwood), and M-907-3. These figures show plan and elevation views between the ultimate heat sink and the pumps. The turbine building base mat is designed and constructed such that it will not suffer gross failure or collapse during either a safe shutdown earthquake (SSE) or a design-basis tornado.

This has been accomplished by utilizing applicable ACI and AISC codes and imposing the SSE and the design basis tornado loads on the turbine building and the base mat design. Because these additional loads were used in the design of the turbine building base mat, the requirements of General Design Criteria 2 and 44 of Appendix A to 10 CFR 50 are satisfied. Therefore, the turbine building has the same margin of safety as the Category I structures. This complies with the Regulatory Staff position regarding interaction of non-Category I structures with Category I structures, as given in SRP Section 3.7.2.II.8. Although the specific requirements of Appendix B to 10 CFR 50 cannot be demonstrated, comparable practice was used in the construction of the turbine building base mat. The material suppliers and contractors for the construction of the turbine building were the same as for the construction of the Category I structures. The Applicant's construction personnel monitored the construction work and have ensured quality control. The quality of the construction is reflected in the average actual concrete strengths. The use of the same material and process controls, as were used to construct the Category I structures, resulted in actual concrete strengths that consistently exceeded the required design strengths for the Category II structures. Therefore, the "in-place" strength of the reinforced concrete used in the construction of the turbine building basemat exceeds the design requirement.

The Applicant's and contractor's quality control documentation for the construction of the turbine building base mat including the responsible quality control records are available at the plant sites.

Based on the equivalent margins of safety provided in the design of the turbine building and the Category I structures, and the quality control provided in the construction, the integrity and functionality of the essential service water piping has been assured.

Normal essential service water heat loads are as indicated in Table 9.2-1. These loads are supplied from one of the full-capacity loops in each unit, so that one of the supply pumps is in continuous operation. Upon receipt of a safeguards actuation signal, both essential service water pumps will automatically start and the diesel engine generator units will automatically start. If power is lost to the ESF buses, all safety-related equipment will be automatically sequenced to start upon restoration of bus voltage. Components are all individually sealed in (latched) so that loss of the actuation signal will not cause these components to return to the position held prior to the advent of the actuation signal.

The centrifugal charging pumps and the safety injection (SI) pumps are safety-related equipment and are cooled with essential service water. In the event of a loss of offsite power, with or without SI, these pumps are supplied with cooling water within 60 seconds. The diesel generators are designed to operate only 5 minutes without a cooling supply.

The diesel generator load sequencing times ensure that these safety-related pumps are supplied with cooling water within 60 seconds in the event of a loss of offsite power, with or without SI.

At Byron, the essential service water system pumps receive their suction water supply from the basin, which is at grade level, of the essential service water cooling towers. The essential service water pumps are located about 70 feet below ground level in the lowest area in the auxiliary building. At the nominal design flow of 24,000 gpm the pumps required net positive suction head is 32 feet. With two pumps drawing water through the common suction line and minimum water level in the cooling tower basin the net positive suction head available for each pump is more than two times the required NPSH.

The essential service water pumps at Braidwood receive their suction water supply from the essential cooling pond. The essential service water pumps are located in the lowest area in the auxiliary building. Considering a maximum drawdown in the level of water in the essential cooling pond to elevation 589 feet MSL following a 30-day period under post-LOCA conditions, and with 33 feet (dirty piping) of friction loss in the supply line while furnishing 24,000 gpm to each of two pumps, there is 56.6 feet of net positive suction head available versus 32 feet required by the pumps at design capacity.

The system satisfies the single-failure criteria (either active or passive) since all its components are multiple and redundant. A failure analysis is given in Table 9.2-2.

9.2.1.2.4 Leak Detection

Leak detection is provided by means of system flow and pressure drop instrumentation and leak detection sumps in the auxiliary building basement where the essential service water pumps are installed. The 1A and 2A essential service water pumps are located in one compartment and the 1B and 2B pumps are located in a separate adjacent compartment. Each compartment contains an essential service water sump as shown in Drawing M-11. Each sump has two sump pumps. Since the essential service water is nonradioactive, the pumps normally discharge to the turbine building drain tank. However, at Braidwood, upon

contamination or anticipation of contamination in the essential service water sump, local operator action may be taken to direct the flow to the auxiliary building floor drain tank.

Shown in the same drawing are subcompartments in which the auxiliary building floor drain sumps are located. Drainage from upper elevations is collected and pumped to the auxiliary building floor drain tank. Each sump is provided with two sump pumps. Radiation monitors are provided to detect inleakage of radioactive material as discussed in Section 11.5.

9.2.1.2.5 Chemistry Control

The essential service water system is treated to control organic slime buildup. Corrosion and/or scale inhibitors are employed. Silt dispersants are used at Braidwood. Additionally, at Byron, the SX makeup from the river is treated with a low concentration of copper ions to prevent the infestation of zebra mussels.

9.2.1.2.6 Instrumentation Applications

Flow, temperature, pressure, and radiation monitoring instruments are employed as shown in Drawings M-42 and M-42A.

9.2.1.2.7 Flood Protection

Inasmuch as Byron Station is at an elevation approximately 200 feet above the normal level of the Rock River, it is not susceptible to being flooded by the Rock River. There are no other bodies of water or rivers in the vicinity that could flood the Byron Station. The Byron river screen house is discussed in Subsection 2.4.3. Flood protection for the ultimate heat sink is discussed in Subsection 9.2.5.

Inasmuch as Braidwood Station is at an elevation approximately 62 feet above the normal water level in the Kankakee River, from which it derives makeup water for the cooling pond, it is not susceptible to being flooded by the Kankakee River. There are no other rivers or bodies of water in the vicinity that could flood the Braidwood Station. The spillway overflow level from the cooling pond is at elevation 595 feet 9 inches MSL and is designed to pass an outflow from the pond due to a probable maximum precipitation on the pond drainage area as discussed in Subsection 2.4.8 Flood protection for the ultimate heat sink is discussed in Subsection 9.2.5.

Internal flood protection is provided for the essential service water pumps as described below. The essential service water pumps are located in the auxiliary building basement (elevation 330 feet). The 1A and 2A pumps are located in one compartment and the 1B and 2B pumps are located in a separate adjacent compartment. Entrance to each compartment is via a watertight door. Each compartment is constructed to prevent flooding due to a pipe failure in one compartment from affecting the equipment in the opposite train essential service water compartment. Therefore, flooding of one compartment will not result in loss of function in either unit.

9.2.2 Component Cooling System

The component cooling system is required to provide cooling water to various plant components of either unit during normal operation, plant shutdown, and after an accident and to act as an intermediate system between the components being cooled and the essential service water system. The necessity for separation of heat sink and heat source is due to the fact that some of the cooled components may contain radioactive material. This intermediate system arrangement minimizes possible leakage of radioactive material into the environment.

9.2.2.1 Design Bases

The component cooling system design is based on the design-basis service water supply maximum temperature of 100°F.

During normal operation, the component cooling system may be shared by both units or split into separate unit operation dependent on plant conditions. Isolation valves make it possible to divide the system into individual subloops. The major heat loads for each unit may be run "split" into isolated loops in which no cooling water from one loop goes into another loop. The loads may be divided into a Unit 1 and Unit 2 loop with the exception of RHR pump and RHR heat exchanger cooling in one of the two RHR loops of each unit. These RHR trains are supplied from a common header which may be aligned with Unit 1 pumps, Unit 2 pumps, or isolated and supplied by the common pump. Isolated modes of operation may be used if necessary due to heat load considerations. It is also possible to align sub-loops for either unit such that redundant trains of safety related equipment are supplied by separate cooling loops.

9.2.2.2 System Design and Description

The Safety Category I, Quality Group C component cooling system is shown on Drawings M-66 and M-66A. It consists of five pumps, three heat exchangers, two surge tanks and associated valves, piping and instrumentation. Two pumps, one heat exchanger, and one surge tank serve each unit. The remaining pump and heat exchanger are provided as backup equipment for either unit, e.g. during maintenance or shutdown of a unit. During normal operation, one pump and one heat exchanger are required to accommodate the heat load for each unit. However, with full spent fuel pit heat load an additional pump is required.

Cooling water is circulated by the pumps through the shell side of the heat exchangers to the components using the cooling water and back to the pump suction. The surge tank is connected to the pump suction lines. This tank accommodates expansion and contraction of the system water due to temperature change or inleakage; it also provides a water supply until a small leak in the system can be isolated. This water volume is separated into two parts by a baffle which protects against complete draining of the tank in case a leak develops in one train of a subloop during postaccident alignments.

Demineralized makeup water is supplied to the system into the surge tank from the water treatment plant as required. A backup source of makeup water is provided from the primary water storage tank. Chemicals may be added via the chemical addition tank.

The makeup system to the component cooling surge tank is automated. The makeup valves receive a signal from level transmitters on the surge tank. The demineralized water makeup valve opens first. If the level continues to drop, the primary water makeup valve will open. The baffle plate in the surge tank allows for independent filling of each train from a separate makeup water source. In the event surge tank level falls below the baffle plate level, Train A is supplied by Primary Water and Train B is supplied by Demineralized Water. A control switch on the main control board for each makeup valve allows for manual initiation of makeup to the surge tank. In addition, Braidwood has the capability of manually adding chromated drains to the B Train side of the surge tank.

In order to prevent essential service water in-leakage to the component cooling system, the component cooling water in the component cooling heat exchanger is at a higher pressure than the essential service water.

9.2.2.2.1 Equipment Served

The component cooling system provides cooling water to the following equipment:

a. residual heat removal system

    1. residual heat exchangers, and

    2. residual heat removal pumps;

b. chemical and volume control system

    1. letdown heat exchangers,

    2. excess letdown heat exchangers,

    3. seal water heat exchanger, and

    4. charging pump (positive displacement);

c. reactor coolant system

    1. reactor coolant pumps;

d. Process sampling system

1. sample cooler panel

a. pressurizer steam space,

b. pressurizer liquid,

c. reactor coolant hot leg loops 1 and 3,

d. reactor coolant cold leg loops 1 through 4,

e. spent fuel pit cooling system

   1. spent fuel pit heat exchangers;

f. gaseous radwaste system

   1. waste gas compressors;

g. boron recycle system

   1. boron recycle evaporator condenser, distillate cooler, and vent condenser; and

h. containment penetrations.

Of the equipment listed above, the RHR pumps are safety-related, and require cooling water within 60 seconds in the event of a loss of offsite power. The diesel generator load sequencing times ensure that the component cooling pumps are started with in 60 seconds. Other components are either not safety-related, or do not require cooling from the component cooling system within critical time frames.

9.2.2.2.2 Component and Instrumentation Description

The codes and standards to which the individual components of the component cooling system are designed are selected according to the most severe conditions expected for each component either during normal operation or during operation in conjunction with the emergency core cooling system. The codes selected are appropriate for the limiting conditions of operation and are consistent with the safety classifications for these components. The limiting heat loads on the component cooling system occur for a simultaneous shutdown of one unit with the other unit undergoing a LOCA. Component design parameters are given in Table 9.2-3.

9.2.2.2.2.1 Component Cooling Piping

Carbon steel is used for piping since it has good corrosion resistance when in contact with the inhibited component cooling water. Piping joints and connections at some pumps, heat exchangers, valves, and instrumentation connections are flanged to facilitate removal for maintenance.

9.2.2.2.2.2 Component Cooling Valves

There are no special provisions to prevent valve leakage to the atmosphere since the component cooling water is not normally radioactive. Isolation valves in the component cooling system are designed for minimum pressure drop. All valve bodies are socket-welded or butt-welded carbon steel with stellite or stainless steel trim.

Relief valves relieve the volumetric expansion which occurs if the cooling water lines to the component are isolated and the water temperature rises. The valve set pressure equals the lower of the system design pressure or the component design pressure.

Valves are installed in the cooling water inlet and outlet headers to the reactor coolant pumps and the excess letdown heat exchangers for the purpose of containment isolation. In the event of a safety injection signal, the excess letdown heat exchanger isolation valves close on phase A isolation and the reactor coolant pumps are isolated upon activation of phase B isolation. Check valves are also provided inside the containment on both inlet headers.

The subloop train to the reactor coolant pump thermal barrier has been given special consideration. Each supply line to the thermal barrier is provided with a check valve. On the discharge header, high coolant flow will automatically close the containment isolation valve preventing thermal barrier leakage into the component cooling system.

9.2.2.2.2.3 Component Cooling Surge Tanks

There are two surge tanks provided. Each tank serves one loop of the systems under normal operating conditions. The tanks are connected to the pump suction lines. The tanks purpose is to: (1) accommodate system water expansion and contraction due to temperature changes; (2) accommodate inleakage to the system; and (3) provide makeup for small system leaks until they can be isolated. Design of the tanks is covered in Table 9.2-3.

9.2.2.2.2.4 Component Cooling Heat Exchangers

Three heat exchangers serve the system. Each heat exchanger is sized for 100% capacity of normal single unit heat loads. One heat exchanger serves each loop with the third available as a maintenance spare or for additional heat requirements of a particular loop. Design of the heat exchangers is covered in Table 9.2-3.

9.2.2.2.2.5 Component Cooling Pumps

There are five pumps serving the system. Under normal conditions, up to two pumps will serve each unit with the fifth pump

available as a maintenance spare or for additional load requirements of a particular unit. Design of the pumps is covered in Table 9.2-3.

9.2.2.2.2.6 Component Cooling Instrumentation

The operation of the loop is monitored with the following instrumentation:

a. Flow indicators on the outlet lines for the following components:

* 1. RCP upper and lower motor radial bearing oil coolers and thermal barriers,

* 2. RH heat exchangers,

* 3. RH pump seal coolers,

* 4. PD pump oil cooler,

5. excess letdown heat exchanger,

* 6. seal water heat exchanger,

7. letdown heat exchanger,

8. spent fuel pit heat exchanger,

9. recycle evaporator package,

10. waste gas compressors, and

* 11. penetration cooling.

b. Temperature indicators on the outlet lines for the following components:

* 1. RCP upper and lower motor radial bearing oil coolers and thermal barriers (located in common outlet headers),

* 2. RH heat exchangers,

3. excess letdown heat exchangers,

4. seal water heat exchanger,

5. letdown heat exchanger,

* 6. component cooling heat exchangers,

7. process sampling heat exchangers,

8. spent fuel pit heat exchanger,

9. waste gas compressors,

10. recycle evaporator package,

11. component cooling pumps, and

12. penetration cooling lines.

*c. Pressure detectors on the inlet lines to the pumps and on the discharge headers between the component cooling pumps and the component cooling heat exchangers.

*d. Water level indicators and low tank level pump trip switches on the component cooling surge tank.

e. Radiation monitors on the outlet lines of each component cooling heat exchanger.

*Note: Indicators are provided with alarms in the main control room that actuate at preset limits.

The pressure in the component cooling water headers downstream of the component cooling pumps is indicated locally and remotely on the Main Control Board. If a component cooling pump fails during operation, the resulting low pressure automatically starts one of the standby pumps.

A local pressure indicator is provided in each component cooling pump suction line. These indicators are used to monitor pump suction pressures during pump operation.

The component cooling surge tank water level is indicated locally and in the plant control room. High and low level signals actuate alarms if the water level is above or below the normal range. Redundant instruments are provided to indicate if the level in one of the two sides of the surge tank falls below the low-level setting. Demineralized water and primary water makeup valves cycle at preset level limits to maintain the normal range in the event if a need to makeup to the Component Cooling Surge tank. The Demineralized Water makeup valve will open first. If the level continues to drop, the Primary Water makeup valve will open. Control switches on the Main Control Board for each valve allow the operator to makeup to the surge tank prior to reaching the preset level limits. An alarm is provided in the Main Control Room which indicates that automatic makeup has been initiated. In addition, a

separate pair of level switches trips the respective train of component cooling pumps on low surge tank level for pump protection.

9.2.2.3 System Operation

During normal operation, two pumps (one pump in operation, one pump in standby), one heat exchanger, and the one surge tank serve each unit. With the maximum spent fuel pit heat load, a

standby pump would be employed from either unit. The CC system could also be operated shared with two pumps (one per unit), two heat exchangers, and the two surge tanks serving the two units. During the limiting mode of operation (simultaneous LOCA and safe shutdown), three heat exchangers and four pumps are normally available (prior to a postulated single failure) and the units will be "split" each being served by two pumps and one surge tank and with the third heat exchanger lined up to the system undergoing post-LOCA recovery. Table 9.2-4 gives typical component flow rates for the major plant operating phases.

9.2.2.3.1 Reactor Startup

Reactor startup is defined as those operations which bring the reactor plant from cold shutdown to normal operating temperature and pressure.

During a cold shutdown condition, residual heat from the reactor core is removed by the component cooling and residual heat removal systems. The number of pumps and heat exchangers in service varies depending upon the residual heat removal load, the spent fuel pit load and the operations in progress in the waste recycle system and the boron recycle system.

When required, component cooling system water is sampled and a corrosion inhibitor is added as necessary. The surge tank water level can be adjusted automatically or manually with the loop makeup valve.

After the reactor coolant pumps are started and once the residual heat removal operation is discontinued, the residual heat removal system is isolated from the reactor coolant system. This decreases the component cooling water system heat load for the unit. One component cooling pump is placed on standby to start automatically on low pressure in the component cooling pump discharge header. The standby component cooling heat exchanger may be isolated from the system. At the completion of the startup procedure, adjustments are made, if necessary, to correct cooling water flows.

9.2.2.3.2 Power Generation and Hot Standby Operation

Table 9.2-4 gives a typical flow distribution for normal operation, assuming that the reactor has recently returned to power following a refueling operation. The recycle evaporator is put in service whenever required and the spent fuel pit heat exchangers are used when there is spent fuel to be cooled.

9.2.2.3.3 Reactor Shutdown

Reactor shutdown is defined as those operations which bring the reactor from normal operating temperature and pressure to cold shutdown for maintenance or refueling.

The initial phase of reactor cooldown is accomplished by removing steam from the steam generator through the steam bypass to the main condenser. In the next phase, when the reactor coolant temperature and pressure are reduced to less than 350°F and about 350 psig, the residual heat removal operation is initiated, i.e. approximately 4 hours after shutdown. Design cooldown rates are accomplished by placing three pumps and two heat exchangers in service on the unit being cooled which assumes both residual heat exchangers are placed in service. Normal operating practice is to place two component cooling pumps and two component cooling heat exchangers in service on the unit cooling down which has one RHR train aligned for cooldown. The consequences of cooldown with less equipment than considered for the design scenario, only slows down the cooldown rate from the design value and does not affect the safe operation of the plant.

The rate of heat removal from the reactor coolant is controlled by regulating the reactor coolant flow rate through the residual heat exchangers. The flow rate is regulated from the plant control room by adjusting the throttling valves downstream of the residual heat exchangers and by letting part of the flow by-pass the heat exchanger. The cooldown rate is limited by an allowable cooling rate based on the PTLR limits. During the cooldown period, the cooling water inlet temperature to the various components is permitted to increase to 120°F. As the reactor coolant temperature decreases, the reactor coolant flow through the residual heat exchangers is increased.

A typical flow distribution for the system during various cooldown periods is shown in Table 9.2-4. At the start of cooldown, normal flow is assumed to the letdown heat exchangers seal water heat exchanger, sample heat exchangers and the charging pumps. Clearly, full flow is not necessarily required to each of the components throughout cooldown; flow reductions may be made as cooldown progresses.

After the reactor coolant pressure has been reduced, temperature is reduced to 140°F or lower, and RHR flow is established at 1000 gpm or greater, the reactor coolant system may be opened for refueling or maintenance operations. Depending on the residual heat load, which decreases with time, the number of pumps and heat exchangers in the component cooling and residual heat removal systems may be reduced and cooling water flow to the various components may be discontinued as desired.

9.2.2.3.4 Refueling

During the refueling operation, the residual heat removal load determines the required number of pumps and heat exchangers in the component cooling and residual heat removal systems. Prior to placing expended fuel elements in the spent fuel pool, the

required component cooling water flow is established to the spent fuel pool heat exchanger and the spent fuel pool cooling system is placed in operation. Operation of the spent fuel pool cooling system is continued as necessary to maintain the spent fuel pool at or below 120°F.

9.2.2.3.5 Post-LOCA Recovery

Two pumps, two heat exchangers, and one surge tank are normally provided for the unit undergoing post-LOCA recovery. Unit 1 equipment is isolated from Unit 2 equipment, with equipment in the unit with the LOCA capable of being divided into redundant safeguard trains each having one pump and one heat exchanger. The baffle separating the surge tank into two equal water volumes maintains train separability.

9.2.2.4 Safety Evaluation

The combined capability of the component cooling heat exchangers is sufficient to remove the heat generated from the various plant components during normal power operation and to provide adequate cooling and single-failure protection to safety features loads after an accident.

Table 9.2-5 shows the results of the system malfunction analysis.

Four CCW pumps can be required for the limiting mode of operation (simultaneous LOCA and safe shutdown), meaning that two pumps can be expected for each unit prior to any single failure. This is the assumption upon which the malfunction analysis in Table 9.2-5 is based (there is also a fifth, common pump which could be realigned). Sufficient cooling would be provided following the loss of a pump on a particular unit (single failure). Consequently, should a single failure render one of the two pumps inoperable in a unit undergoing post-LOCA recovery, sufficient cooling would be provided by the redundant cooling pump, although the time required for normal cooldown would be extended. Similarly, should one of the pumps available for normal operation (including normal shutdown) in the other unit become inoperable, acceptable cooling could be provided with only one pump, although the time required for normal cooldown would be extended.

The CCWS is designed to give the operator flexibility in aligning the desired pumps and heat exchangers to each unit. Adequate manual and motor-operated valves are included to provide for isolation between units and between redundant subsystems within a unit. These valves are not, however, required to function during normal power operation or in the short term following an accident. Should the single failure of one of the valves to function in the long term make it undesirable to use a particular pump and heat exchanger, sufficient cooling would

be provided with a different subsystem. Should a piping break occur in one of the common headers in the long term, adequate valves are provided to isolate the break, and, as before, sufficient cooling would be provided by a different subsystem.

The plant conditions and details of the failure must be evaluated in order for the operator to determine the specific actions required.

9.2.2.4.1 System Availability and Reliability

Either unit may be aligned with two completely independent, parallel trains, each consisting of one pump and one component cooling heat exchanger. Either train provides sufficient cooling to accommodate the heat loads experienced by that unit during a loss-of-coolant accident. Hence, any single active or passive failure in the system does not prevent it from performing its design function.

Inside the containment, most of the piping, valves and instrumentation are located outside the shield wall at a location above the calculated water level in the bottom of the containment at postaccident conditions. In this location, the portions of the system within the containment are protected against missiles and against flooding during postaccident operations. This location also provides radiation shielding which permits maintenance and inspection to be performed during normal power operation.

The component cooling pumps, heat exchangers, surge tanks and associated valves, piping and instrumentation are located outside the containment and are, therefore, available for maintenance and inspection during power operation. Replacement of a pump or heat exchanger may be performed in accordance with technical specification limitations while the other units are in service.

Sufficient cooling capacity is provided to fulfill all system requirements under normal and accident conditions. Adequate safety margins are included in the size and number of components to preclude the possibility of a component malfunction adversely affecting operation of safety features equipment. The relief valves on the component cooling water lines downstream from each reactor coolant pump provide thermal expansion protection of an isolated pipe in the event of a severance-type break of the reactor coolant pump thermal barrier cooling coil. The valve set pressure equals the design pressure of the component cooling piping.

The relief valves on the cooling water lines downstream from the sample, excess letdown, letdown, seal water, spent fuel

pit, and residual heat exchangers are sized to relieve the volumetric expansion occurring if the exchanger shell side is isolated and high-temperature coolant flows through the tube side. The set pressure equals the design pressure of the shell side of the heat exchangers.

9.2.2.4.2 Leakage Provisions and Activity Release

Welded construction is used where possible throughout the component cooling system piping, valves and equipment to minimize the possibility of leakage. The component cooling water could become contaminated with radioactive water due to a leak in any heat exchanger tube in the chemical and volume control, the sampling, the residual heat removal or the spent fuel pit cooling systems or due to a leak in the cooling coil for the reactor coolant pump thermal barrier.

Leakage from or to the component cooling system can be detected by a change of level in the component cooling surge tank. The rate of water-level change and the area of the water surface in the tank permit determination of the leakage rate. In-leakage is detected anytime by radiation monitors located on the main return headers. To assure accurate determinations, the operator must check that temperatures are stable.

A cooling water temperature increase of about 250°F in one of the units would be required to overfill its component cooling surge tank. However, should a large leak develop in a residual heat removal heat exchanger, letdown heat exchanger, or due to a ruptured reactor coolant pump thermal barrier, the water level in the component cooling surge tank of that unit would rise, and the operator would be alerted by a high-water level alarm. The vent on the surge tank is automatically closed in the event of high radiation level detected at the component cooling heat exchanger discharge header. If the leaking component is not isolated from the loop before the inflow fills the surge tank, the overflow line with a loop seal will prevent component cooling system overpressurization. The overflow is routed to the auxiliary building equipment drains system.

Three heat exchangers are provided to serve the two units. During all conditions of plant operation, this provides for one backup exchanger. If all three exchangers are available, however, the backup exchanger may be employed on the unit undergoing a LOCA or shutdown (RHR heat exchanger in operation). Design cooldown rates are determined on this basis (two exchangers operating on the unit recovering from a LOCA or shutdown), but the consequence of the loss of one heat exchanger during this time only slows down the cooldown rate from the design value and does not affect the safe operation of the plant.

Five pumps are provided to serve the two units. Under the limiting case, four pumps are required for the two units leaving one pump as backup pump for either unit.

9.2.2.4.3 Incident Control

Containment isolation valves are automatically closed on an engineered safety features actuation signal per Table 6.2-58. The cooling water supply header to the reactor coolant pumps contains a check valve inside and remotely operated valves outside the containment wall. The cooling water supply line to the excess letdown heat exchangers contains a check valve inside the containment which is closed during normal operation. Except for the normally closed makeup line and equipment vent and drain lines, there are no direct connections between the cooling water and other systems. The equipment vent and drain lines outside the containment have manual valves which are normally closed unless the equipment is being vented or drained for maintenance or repair. The vent lines are also capped as an additional safety feature.

9.2.2.4.4 Shared Function

During normal operation, the Component Cooling System may be shared by both units or split into separate unit operation, dependent on plant conditions. Byron and Braidwood normally operate on a unit-separate alignment. Electrically, each unit has two pumps, with the fifth pump being used as a maintenance spare for any of the other four. During normal operation of both units, one heat exchanger and one pump per unit is required. During peak heat load periods for a unit the second pump may be started. The third heat exchanger is available for either unit.

During cooldown, three pumps and two heat exchangers are available for the unit being cooled, leaving two pumps and one heat exchanger for the normal unit. Should a lesser number of pumps or heat exchangers be available, the cooldown time will be extended but this will not affect the safe operation of the plant.

Operation during the recirculation phase of the LOCA requires that two pumps and two heat exchangers be available to the Unit which has experienced the accident. One pump and heat exchanger is sufficient to carry the required heat load during this time, however, since the CCWS system must be capable of accommodating an active or a passive failure under these conditions, two complete "trains" of CCWS equipment (pump-heat exchanger-surge tank) must be available. When operating

during the ECCS recirculation mode, the CCWS trains can be separated from one another by valves such that a leak (passive failure) in one train does not affect operation of the other. Each surge tank has a baffle plate which essentially provides two tanks, one for each train of CCWS equipment. Consistent with the UFSAR discussion of passive failures in the ECCS (UFSAR section 6.3.2.5), a passive failure in the component cooling system is postulated to result in a maximum leakage rate of 50 gpm.

For the case when the Unit 1B or Unit 2B CC pump is out of service and the Unit 0 CC pump is being relied upon, separation of the trains can isolate one train of CC from a CC surge tank. A system leak beyond the design basis leak is the only passive failure that could require placing the system in this configuration.

Placing the system in a configuration that would isolate a running pump from the CC surge tank is administratively controlled by procedure.

The instrumentation in the CCWS is provided primarily for initial system flow balancing and for monitoring purposes during normal operation. Thus failure of any of this instrumentation has no effect on system performance. Exceptions to this are:

a. letdown heat exchanger CCWS flow controllers,

b. reactor coolant pump thermal barrier outlet flow controller, and

c. component cooling surge tank radiation control valve.

The letdown heat exchanger tube side outlet temperature controls a butterfly valve which regulates the CCWS flow to the shell side of this heat exchanger. Should the controller fail in a way to shut off CCWS flow to the circuit, a high temperature alarm will sound in the control room allowing the operator to take corrective action.

Safety-related indication of component cooling water flow from the reactor coolant pump motor oil coolers is provided and alarmed in the main control board. The reactor coolant pump (RCP) thermal barrier outlet header has a flow indicating switch which causes a motor-operated valve (_CC685) to close in this line in the event of high flow (an indication of a tube rupture in a RCP thermal barrier heat exchanger). Should the valve or switch not operate properly, an increasing level is noted in the CCWS surge tank, resulting in a high level alarm, if the leak is not isolated. A second motor-operated valve (_CC9438) is available for manual isolation of the component cooling water return line from the RCP thermal barrier, if required. This valve is located inside the containment building upstream of valve _CC685, and is provided with the design capability of closing against the calculated maximum differential pressure resulting from a rupture of a tube in a RCP thermal barrier heat exchanger. Additionally, two level instruments are provided on each surge tank, both of which will give a high level alarm in the control room.

Each component cooling surge tank vent has an air operated valve which will close on a high radiation signal from the radiation monitors in the discharge headers from the CCWS heat exchangers. This high radiation alarm normally indicates a primary to CCWS leak. Three radiation monitors are provided. The monitor on the common heat exchanger will alarm and close the vent valve on both surge tanks. The radiation monitors on each unit's heat exchanger will alarm and close its respective surge tank vent valve.

9.2.2.4.5 Electrical Power Supply

The normal power supply to the system is from the ESF buses. These are more fully described in Subsection 8.3.1.1.

Four of the component cooling pump motors are supplied, one each, from the four 4160-volt ESF buses. The power supply for the fifth component cooling pump motor can be from any one of the four ESF 4160-volt ESF buses 141, 142, 241, or 242.

For maintaining complete separation, a separate 4160-volt bus (identified as common component cooling pump [CCCP] bus) is provided. The CCCP bus consists of four separate 4160-volt switchgear cubicles, each connected and interlocked to one of the four ESF divisions. Only one 4160-volt breaker is provided and this is racked into the cubicle from which the common component cooling pump motor is supplied.

9.2.2.5 Tests and Inspections

During the life of the Station, the component cooling system is in continuous operation and pump performance tests are conducted on a quarterly basis. The equipment manufacturer's recommendations and station practices are considered in determining required maintenance.

Periodically, a sample of the component cooling water is analyzed to ascertain that water chemistry specifications are met. If the inhibitor concentration and pH is below the specified limits, appropriate chemicals are added to the component cooling chemical addition tank and fed into the component cooling surge tank.

9.2.3 Demineralized Water Makeup System

The makeup demineralizer system, shown in Drawing M-49, provides demineralized water of the required quality for the following purposes:

a. condensate makeup,

b. auxiliary steam boiler makeup,

c. primary and secondary process sampling makeup,

d. chemical feed and handling makeup,

e. waste disposal system,

f. reactor coolant makeup,

g. decanting and drumming station (radwaste),

h. boric acid processing,

i. component cooling,

j. chemical and volume control and boron thermal regeneration, and

k. plant chilled water system.

The makeup demineralizer has no safety functions. The following subdivisions provide information on (1) design bases, (2) system description, (3) safety evaluation, and (4) instrumentation application for makeup demineralizer system.

9.2.3.1 Design Bases

The makeup demineralizer system consists of two parallel trains. The system is designed to produce 216,000 gallons (nominal) per day using one train at 150 gallons per minute, with a maximum output of 504,000 gallons per day using both trains operating at 175 gpm. These capacities are sufficient to supply the expected normal makeup demand when the plant is in operation, with allowance for the regeneration of the demineralizers and a normal amount of downtime for maintenance.

The system is designed to produce demineralized water at the design flow rates with concentrations not exceeding the following:

a. Maximum Silica (as SiO_2) - 0.01 ppm,

b. Maximum Conductivity - 0.10 μmho/cm, and

c. pH - 5.5-7.0.

All pressurized vessels in the system are designed and constructed in accordance with the ASME Code for Unfired Pressure Vessels of ASME Division 1, Section VIII of the ASME Boiler and Pressure Vessel Code to a minimum design pressure of 125 psig and hydrostatically tested at 1-1/2 times the design pressure.

9.2.3.2 System Description

9.2.3.2.1 General Description and System Operation

The makeup system consists of three parallel pressure sand filters and two parallel demineralizer trains. The filters receive water from either of the two station deep wells and discharge to the filtered water storage tank. The water from this tank is fed to either demineralizer via any one of three filtered water transfer pumps. Each demineralizer train consists of a weak acid cation exchanger, a strong acid cation exchanger, a shared decarbonator, a strong base anion exchanger, and a mixed bed polisher. System functions can be controlled automatically or manually.

Filter backwash is performed based on throughput (automatic) or on pressure drop across the filters (manual). Backwash flow is provided by either of two backwash pumps from the filtered water storage tank and is discharged to the station treated waste system. Two of three sand filters can provide full flow makeup while the third is being backwashed.

Demineralizer regeneration is based on primary train (cations/anions) throughput (automatic) or on anion or mixed bed effluent conductivity (manual). The capability to exhaust a train manually is provided. This allows regeneration to be performed automatically.

Mixed bed demineralizer resin is not regenerated. The resin bed is replaced when effluent conductivity is above 0.1 μmho/cm or routine samples indicate a degraded condition.

9.2.3.2.2 Component Description

9.2.3.2.2.1 Sand Filters

Raw water from wells is used to produce demineralized water. The raw water is pumped from the wells through three parallel sand filters. The three 8-foot diameter sand filters are designed for a total maximum flow rate of 450 gpm. The filters are designed so that the remaining two filters, with one filter out of service, will be operating at a service rate of 4.5 gpm/ft^2, based on 450 gpm flow rate.

9.2.3.2.2.2 Demineralizer Trains

Each demineralizer train consists of a 6-foot diameter vessel containing 126 ft^3 of weak acid cation resin, a 6-foot diameter vessel containing 84 ft^3 of strong acid cation resin, a 6-foot diameter vessel containing 84 ft^3 of strong base anion resin, and a 4-foot diameter vessel containing 70 ft^3 of mixed strong acid cation/strong base anion resin in a 1:1 equivalent ratio.

The vessels are designed for a pressure of 125 psig. They are equipped with drains, vents and manholes for sluicing out the resin. The internals are of corrosion-resistant material and designed to adequately distribute and collect the flow without channeling or bypassing.

9.2.3.2.2.3 Demineralizer Regeneration Equipment

The cation regeneration equipment consists of an acid day tank and two acid injection pumps with all the necessary piping and instrumentation and controls. Dilution water is provided by the filtered water transfer pumps from the filtered water storage tank.

The anion regeneration equipment consists of a caustic day tank, two caustic pumps, a regeneration water storage tank, and a hot water tank with heaters with all the necessary piping, instrumentation and controls. Demineralized dilution water is provided by two regeneration pumps that draw from the regeneration water storage tank.

Regeneration takes place as described in Subsection 9.2.3.2.1.

9.2.3.2.2.4 Decarbonator

The decarbonator, common to both trains, is 5 feet in diameter and 12 feet in height with a storage section that is 7 feet 6 inches in diameter and 5 feet in height. The decarbonator reduces the concentration of free carbon dioxide in the cation exchanger effluent to 10 ppm or less.

9.2.3.3 Safety Evaluation

The makeup demineralizer system is designed to produce demineralized water at a rate corresponding to the maximum continuous requirements of the plant. The demineralized effluent normally feeds five tanks: two 500,000-gallon primary water storage tanks, two 500,000-gallon condensate storage tanks, and the makeup demineralizer regeneration water storage tank. Check valves prevent contamination of the makeup demineralizer system by backflow from the system which it supplies. A provision has also been made to send makeup demineralizer effluent directly to each unit's stator cooling tank.

9.2.3.4 Instrumentation Application

Instrumentation for automatic control of the system is provided as described in Subsection 9.2.3.2 and as shown in Drawing M-49. Local and remote indicators and alarms are provided, as required, for monitoring the system and protection of components in the system.

9.2.3.1 Design Bases

The makeup demineralizer system consists of two parallel trains, one serving as a spare. Each train is designed for an average flow of approximately 100 gpm when in service. These capacities are sufficient to supply the expected normal makeup demand when the plant is in operation with allowance for the regeneration of the anion and cation demineralizers and a normal amount of downtime for maintenance.

The system is designed to produce demineralized water at the design flow rates with concentrations not exceeding the following:

a. Maximum Silica (as SiO_2) - 0.01 ppm, and

b. Maximum Conductivity - 0.08 μmho/cm.

All pressurized vessels in the system are designed and constructed in accordance with the ASME Code for Unfired Pressure Vessels of ASME Division 1, Section VIII of the ASME Boiler and Pressure Vessel Code to a minimum design pressure of 125 psig and hydrostatically tested at 1 1/2 times the design pressure.

9.2.3.2 System Description

9.2.3.2.1 General Description and System Operation

The makeup system consists of two parallel lime softeners, three parallel pressure sand filters, three parallel carbon filters, and two parallel demineralizer trains. In addition, a vendor-supplied water treatment trailer may be used for supplemental demineralizer pretreatment. Each train consists of a cation exchanger, an anion exchanger and a mixed bed exchanger. Each train is designed to have an average flow of approximately 100 gpm and a minimum daily net capacity of 100,000 gallons.

The plant is designed for recirculation of plant effluent to the first cation vessel inlet during low-flow conditions, start-up after anion/cation regeneration, or return to service, and for anion rinse recovery.

Filters (both sand and carbon) are backwashed with filtered water from the filtered water storage tank. The backwash may be automatic, based on pressure drop through the beds, or manual. During the backwash of a filter, the entire flow is carried by the other filters. Filters are interlocked to prevent simultaneous backwashing of filters.

Regenerations are not performed on-site via the demineralizer regeneration equipment. All regenerations on the demineralizer trains are performed by off-site vendor services.

Demineralized water is used for acid and caustic dilution during primary regenerations.

9.2.3.2.2 Component Description

9.2.3.2.2.1 Lime Softeners

Raw water from the Kankakee River or Braidwood Lake is used to produce demineralized water at Braidwood Station. The raw water, after flowing through the retention tank, enters the lime softeners, where coagulant and/or flocculant aids are added. The lime softeners consist of two parallel 26-foot diameter reaction tanks. Each lime softener is a full size unit; however, they may be operated in parallel. Normal operation has either softener processing the full flow with the second unit idle.

9.2.3.2.2.2 Sand Filters

The three parallel sand filters, each of 8 feet 6 inches in diameter, are designed for a total maximum flow rate of 500 gpm. (This includes 50 gpm at 35 psig for miscellaneous uses.) The filters are designed so that the remaining two filters, with one filter out of service, are operating at a service rate of 4.5 gpm/ft^2, based on the 500 gpm flow rate.

9.2.3.2.2.3 Carbon Filters

The makeup water flows through three parallel carbon filters, after the three parallel pressure sand filters. The three carbon filters are each 8 feet 6 inches in diameter and are designed for a total maximum flow rate of 500 gpm. The filters are designed to operate at 4.5 gpm/ft^2, based on the 500 gpm flow rate, with one filter out of service. Each filter vessel has a minimum 5-foot bed for activated carbon. Part of the carbon filter effluent is used for the potable water system.

9.2.3.2.2.4 Demineralizer Trains

Each demineralizer train consists of one 7-foot diameter cation column with a capacity of up to 220 ft^3 of cation exchange resin, one 7-foot diameter anion column with a capacity of up to 315 ft^3 of anion exchange resin, and one 4-foot diameter mixed bed column with a capacity of up to 49 ft^3 of mixed bed resin in an approximately 1:1 chemically equivalent ratio.

The vessels are designed for a pressure of 125 psig. They are equipped with drains, vents, and manholes for sluicing out the resin. The internals are of corrosion-resistant material and designed to adequately distribute and collect the flow without channeling or bypassing.

9.2.3.2.2.5 Demineralizer Regeneration Equipment

The demineralizer regeneration equipment consists of an acid day tank, caustic day tank, two sulfuric acid pumps for anion/cation regeneration, two caustic pumps, a dilution water tank, an acid dilution system, a caustic dilution system, and heating system. The regeneration system is equipped with all necessary piping, instrumentation, valves, pumps, and controls needed to automatically provide regeneration chemicals in the required amount, temperature, and concentration to the demineralizer columns during regeneration. The demineralizer regeneration equipment has been abandoned and is not used in the regeneration process. Regeneration takes place as described in Subsection 9.2.3.2.1.

9.2.3.3 Safety Evaluation

The makeup demineralizer system is designed to produce demineralized water at a rate corresponding to the maximum continuous requirements of the plant. Part of the demineralized effluent can be sent through a vacuum deaerator and stored in two 500,000-gallon primary water storage tanks. The rest is sent to the two condensate storage tanks.

Each of the three outlets contain a check valve to prevent contamination of the makeup demineralizer system by backflow from the systems which it supplies.

9.2.3.4 Instrumentation Application

Instrumentation for automatic control of the system is provided as described in Subsection 9.2.3.2 and as shown in Drawing M-49. Local and remote indicators and alarms are provided, as required, for monitoring the system and protection of components in the system.

9.2.4 Potable and Sanitary Water Systems

The purpose of the potable and sanitary water system is to provide potable water and water for the sewage treatment plant.

9.2.4.1 Design Basis

The plant potable water system provides water for drinking and sanitary purposes for approximately 1500 people. At 50 gallons per day per person the sanitary waste system is designed to treat wastes from approximately 1500 people.

9.2.4.2 System Description

Water for drinking and sanitary use at Byron is obtained from deep wells (well water system) located on the plant site and comply with requirements of federal, state, and local authorities. A variance to the Illinois Plumbing Code was obtained from the Illinois Department of Public Health (IDPH) for the well water piping at the essential service water (SX) cooling tower. The plumbing code requires either installation of an approved backflow prevention device or physical separation of the well water and river water makeup systems by an approved air gap. The well water makeup system is physically separated from the river water makeup system but the bottom of the well water makeup line is lower than the overflow elevation of the SX tower basin and an approved backflow prevention device is not installed. IDPH inspectors determined that the air gap between the bottom of the makeup line and the 100% basin level was adequate and granted the variance to the plumbing code. The SX tower basin level is closely monitored and controlled. Unexpected and undetected submergence of the makeup line is very unlikely. The amount of water required is approximately 75,000 gallons per day.

Water for drinking and sanitary use at Braidwood is drawn from the river at a location on the plant site. The water complies with requirements of federal, state, and local authorities. The amount of water required is approximately 75,000 gallons per day.

The potable water treatment system is shown on Drawing M-49-2 and M-49-6 (Byron) and Drawing M-49-3 and M-49-6 (Braidwood). The pneumatic tank supplies all of the sanitary fixtures (toilets, showers, drinking fountains) throughout the plant.

All sanitary waste is treated in a sewage treatment plant in accordance with plans approved by the State of Illinois.

Tertiary treatment is given in the effluent from the sewage treatment plant, and the effluent from the tertiary treatment system is chlorinated before discharging into the receiving body of water.

9.2.4.3 Safety Evaluation

The potable and sanitary water system is not required for safe shutdown of the plant.

The potable and sanitary water system does not connect to any system that might discharge radioactive materials.

9.2.4.4 Testing and Inspection

The potable and sanitary water system are proved operable and tested by their use during normal operations.

9.2.5 Ultimate Heat Sink

9.2.5.1 Design Basis

Since the ultimate heat sink is shared by two units, the condition of both units must be determined for the design basis event. The design basis accident scenario considered for the Byron ultimate heat sink is a loss of coolant accident (LOCA) coincident with a loss of offsite power (LOOP) on one unit and the concurrent orderly shutdown and cooldown from maximum power to cold shutdown of the other unit using normal shutdown operating procedures. The accident scenario also includes a single failure.

The ultimate heat sink for the station consists of the two essential service water mechanical draft cooling towers and the makeup system to these cooling towers. As discussed in Subsection 9.2.1.2, heat from the essential service water system is rejected to the essential service water cooling towers. The towers are used during normal operation thereby providing a means of availability and surveillance not obtainable with an emergency system maintained on a strictly standby basis. Components which contribute to the essential service water heat loads are listed in Table 9.2-1.

Figure 9.2-7 shows the combined heat rejection rate versus time for the unit undergoing post-LOCA cooldown, plus heat rejection rate versus time for the unit undergoing safe shutdown.

9.2.5.2 System Description

9.2.5.2.1 Essential Service Water Cooling Towers

The essential service water cooling towers are part of the essential service water system, a diagram of which is provided in Drawing M-42a Plan and section drawings for the essential service water cooling towers are shown in Drawings NCT-683-4H, NCT-683-14H, M-900 Sheet 9 and S-259. The cold water basins of the two cooling towers are connected by an overflow.

The essential service water cooling towers are required for safe shutdown and are Safety Category I, Quality Class C, Seismic Category I. The essential service water mechanical draft cooling towers are the ultimate heat sinks for the essential service water system. There are two induced draft cooling towers of the counterflow design. Each of the two safety-related mechanical draft cooling towers consists of a water storage basin, an antivortex duct, a trash rack, four fans, four riser valves, and two bypass valves.

The ultimate heat sink is capable of providing adequate cooling capability for a LOCA coincident with a LOOP in one unit and the concurrent orderly shutdown and cooldown from maximum power of the other unit to cold shutdown using normal shutdown operating procedures. This scenario also includes a single failure.

Emergency power to the essential cooling tower mechanical draft fans is supplied from ESF buses which may be supplied by the onsite emergency diesel generators.

The temperatures of the essential service water cooling tower basin and the supply headers must be controlled to prevent freezing in the tower fill. This is accomplished by sensing pump discharge temperature and controlling hot water bypass valves to the cooling tower basins. A Category I sensing element and temperature controller is provided for each cooling water train for each unit. The controller provides visual indication of temperature in the control room. The controller also maintains cooling water temperature in the tower basins by opening the bypass valves when the temperature drops to a predetermined value, so that the cooling section is removed from service, and closing the bypass valves when the water supply temperature increases to a predetermined value so that the cooling section is returned to service.

The cooling towers must have a source of makeup water to compensate for drift losses, evaporation, and blowdown. The normal supply of makeup water comes from the Category II circulating water system. An emergency source of makeup water is provided by the Category I diesel driven makeup pumps. These are described in Subsection 9.2.5.2.2. An additional source of makeup water is provided by the Category II onsite deep well pumps, which are described in Subsection 9.2.5.2.3.

9.2.5.2.2 Category I Essential Service Water Makeup System

The essential service water makeup pumps, which are active components required for safe shutdown, are ASME Section III Safety Category I Quality Class C components.

Under low levels in the Byron essential service water cooling towers, each tower is provided with a Category I diesel engine-driven makeup pump which automatically starts on low water level signal. These pumps are located in the river screen house and take suction from behind bar grilles and traveling screens located therein. Each essential service water cooling tower is supplied by a separate makeup train consisting of a pump and Safety Category I supply line.

Each diesel-driven essential service water makeup pump located in the river screen house is provided with a dedicated Seismic Category I fuel oil supply. This fuel oil supply is discussed in Subsection 9.5.4.

Therefore, Category I makeup water can be supplied to the basins of both towers by either of the two lines from the river screen house. Similarly, the system can return water to one tower while deriving water from the other tower's basin, by way of the overflow.

The river screen house is shown in Drawing M-20. A detailed cross section of the river intake structure is shown in Figure 9.2-28. The rating curve for low flows on the Rock River at the structure is shown in Figure 9.2-29.

The top of the base mat is at elevation 663 feet 6 inches MSL, and the screens are recessed within the base mat so that essential service water makeup can be provided. A sump is provided for each essential service water makeup pump, having a bottom of sump elevation of 660 feet 6 inches MSL.

Minimum pump submergence requirement is 22-1/2 inches. The pump intake is about 15-1/2 inches above the bottom of the sump.

The essential service water makeup pumps may be started manually from the control room, locally at the river screen house, or automatically on level controls of the cooling tower basins. Once started, they continue to operate until the fuel supply to each engine drive (fuel consumption at 100% rated engine load is 12 gallons per hour) is exhausted or until the engines are manually stopped from the control room or locally. The engines and pumps are capable of meeting makeup requirements for the actual design basis LOCA heat rejection rates under worst case evaporative loss conditions. A minimum indicated level of 47% of the 2000-gallon tank will ensure 72 hours of makeup pump operation before refueling is required. The 47% indicated level ensures that there is at least 864 gallons of usable fuel available to each diesel powered essential service water makeup pump, with an allowance for instrumentation tolerances.

The Category I makeup pumps are designed for the combined event flood, but not for the probable maximum flood.

9.2.5.2.3 Category II Deep Well Pumps

The Category II, Quality Group D onsite deep wells provide a source of makeup water to the essential service cooling tower basins in the event of a flood more severe than the combined event flood on the Rock River. Since the onsite wells are located approximately 200 feet above the river at plant grade elevation, they will not be affected by flooding on the Rock River.

The onsite wells at Byron are powered by ESF buses E11 and E12. The well pumps will, therefore, be capable of supplying makeup water to the essential service water cooling towers in the event of the loss of the river screen house coupled with the loss of offsite power. The wells supply the required amount of water for tower consumptive makeup for a minimum of 30 days. An aquifer pumping test was performed in the Byron water wells in July 1980. The test verified that the wells are capable of satisfying the requirement for essential service water makeup. Test results indicated that the total drawdown in each well after 30 days of continuous pumping at 800 gpm will be approximately 85 feet. This is substantially less than 125 feet of available drawdown in each well and demonstrates the adequacy of the wells.

The deep wells and portions of the well water system, which are an alternate source of water to the essential service water cooling towers, have been qualified for the safe shutdown earthquake.

9.2.5.3 Safety Evaluation

9.2.5.3.1 Ultimate Heat Sink Design Basis

The ultimate heat sink is designed to withstand either the safe shutdown earthquake or the probable maximum flood of the Rock River occurring separately, consistent with the philosophy for ultimate heat sinks for nuclear power plants. The system withstands a single active failure, while maintaining the system's ability to perform its safety function. Tables 9.2-2 and 9.2-16 present a failure analysis.

The review of the ultimate heat sink for single active electrical failures was based on guidance from IEEE standards, the Byron Safety Evaluation Report (1983), and the Standard Review Plan. Passive failures in fluid systems do not represent a challenge to the heat removal capability of the ultimate heat sink because of the cross-tie and bypass capabilities in the cooling water system. Passive failures (i.e., loss of a tower) were analyzed for Byron station but were limited to nonaccident conditions. Acceptability was based on the ability of the system to perform its safety function in the presence of such a failure.

The Safety Category I river screen house is designed for the combined event flood as discussed in Subsection 2.4.3.7, thus, should a flood more severe than the combined event flood occur, the Safety Category I makeup systems would be unavailable. In this event, the onsite wells would provide makeup.

The ultimate heat sink is designed to withstand a design-basis tornado, with noted exceptions stated in Section 3.5.4.1. The design basis of the cooling towers is discussed in Subsection 9.2.5.2.1. For the case of a tornado

impacting the river screen house, which is not protected against such missiles, the onsite wells will provide makeup.

The Category I structures and components of the ultimate heat sink are designed to withstand the SSE. In the event of failure of the Oregon Dam downstream of the river screen house, concurrent with a low river discharge condition, the water level of the Rock River would be 664 feet 4 inches MSL, which is above the base mat elevation of the river screen house. Thus the Category I makeup pumps would have adequate submergence. In addition, under these conditions, an alternate source of makeup water is available from the seismically qualified deep wells.

9.2.5.3.1.1 Design Basis Reconstitution

A design basis reconstitution of the Byron ultimate heat sink was performed (Reference 8) to verify the design of the ultimate heat sink. The design basis event for the Byron ultimate heat sink is a loss-of-coolant accident (LOCA) coincident with a loss-of-offsite power (LOOP) in one unit and the concurrent orderly shutdown from maximum power to cold shutdown of the other unit using normal shutdown operating procedures. The accident scenarios analyzed various single failures and assumed that one or two essential service water cooling tower cells were initially out of service. These scenarios maximized heat supplied to the essential service water cooling towers and minimized tower heat removal capability.

In addition to evaluating the normal configuration of the SX systems trains cross-tied, scenarios were performed with the SX system trains assumed to be aligned as two separate loops (trains split) on one or both units. In this configuration a single failure of an EDG or SX pump could result in water flow to only one of the two cooling towers.

An additional scenario was performed assuming two fans powered by the same electrical division are initially out of service with a passive electrical failure that impacts the other two fans on the same SX cooling tower. To offset the reduced performance of the UHS in this potential configuration, a lower outside air wet bulb temperature is assumed.

The design heat load from the nonaccident unit is conservatively calculated as the energy required to reduce the unit from maximum to zero power and reduce the reactor coolant temperature to cold shutdown conditions (<200°F). Additional heat load is placed on the essential service water system and ultimate heat sink once residual heat removal is placed in operation (at approximately 350°F). Under normal conditions, the minimum time to reach this condition, assuming an orderly shutdown and cooldown from maximum power using normal operating procedures, would be 8 hours. For some single failure scenarios (high wet bulb temperatures with multiple SXCT fans not running) the start of RHR cooling may need to be delayed on the non-accident unit and/or the cool down rate may need to be slowed to maintain basin temperatures within design limits.

9.2.5.3.1.1.1 Containment Heat Load Calculations

The containment integrity calculations contained in Subsection 6.2.2 were reviewed to determine the scenario where the highest containment heat load would occur. The greatest heat load occurs as a result of a reactor coolant system double-ended pump suction (DEPS) break with maximum ECCS and maximum heat removal assumptions. This case is a scenario in which all emergency core cooling systems inject with two diesel generators in operation. This was conservative in the sense that it combined a maximum energy release assumption with a coincident loss of heat dissipation capability (i.e., the failure of two essential service water cooling tower fans to operate).

The containment heat loads consist of loads from the RCFCs and the residual heat removal (RHR) system. The analysis examined generated RCFC heat removal rates versus time. The sump water temperature results from these runs were combined with system performance data to develop RHR loads.

The new containment heat load calculations used heat removal rates via the RCFCs and the RHR system that were maximized to determine the limiting heat load on the ultimate heat sink. The performance of the RCFCs was recalculated to bound maximum expected essential service water flow rates and air flow rates. The heat removal rates during recirculation were maximized.

The accident unit containment heat load to the UHS is maximized by:

- Assuming higher essential service water flow rates to the RCFCs,
- Assuming higher air flow rates to the RCFCs, and
- Assuming earlier switchover to containment recirculation phase and corresponding earlier RHR heat loads.
- Clean heat exchanger transfer rate and maximum water flows are assumed for the CC and RH heat exchangers.

Scenarios were performed postulating all four reactor containment fan coolers (RCFCs) in operation. For postulated passive electrical failures, additional scenarios were performed assuming operator action is taken to reduce accident unit heat input to the UHS. Emergency operating procedures direct the operators to secure up to two of the RCFCs on the LOCA unit if less than six SXCT fans are running in high speed with high outside air wet bulb temperatures. This action is assumed to occur within 21.6 minutes of the initiation of the LOCA. As discussed in UFSAR Sections 6.2.1 and 6.2.2.3.1 any two of the four RCFC units will provide sufficient heat-removal capability to maintain containment pressure below the design value following a LOCA.

The integrated heat load during the critical period for basin temperature was maximized. These increased heat loads were used for conservatively evaluating UHS Tower performance and do not affect Chapter 6 containment analyses.

9.2.5.3.1.1.2 Steady State Tower Performance Analysis

Essential service water cooling tower performance was calculated based on the averaged cell flow for each of the two SX cooling towers and the wet bulb temperature for the scenario. The design wet bulb temperature during warm weather operation is 82°F (Refer to UFSAR Section 2.3.1.2.4). The wet bulb temperature assumed when the bypass valves are open (cold weather operation) is 70°F. When two fans powered by the same electrical division are initially out of service, the maximum wet bulb temperature is assumed to be 76°F.

The results of this calculation provide the cooling tower cold water outlet temperature for a range of cooling tower inlet water temperatures.

An essential service water cooling tower performance curve is then generated from the temperature parameters. This curve is used as input to the basin calculation, which develops a basin temperature profile as a function of time.

9.2.5.3.1.1.3 Time Dependent Basin Temperature Calculations

These calculations predicted the basin temperature using a time dependent two cooling tower model.

The time dependent feature of the model was developed to account for the transient nature of the LOCA heat load. The calculations used the time-dependent total heat loads to determine the amount of heat added to the essential service water system.

The two-cooling-tower models were developed to provide the capability to analyze different flow and energy (heat load) going to each of the cooling towers. The flow to each of the cooling towers could be significantly different under different accident scenarios. Depending on the scenario, the modeling of energy transport also considered the distribution of miscellaneous heat loads. For scenarios with failed fans that have open riser valves, the SXCT cells operating in the natural draft mode are assumed to provide 10 percent of the heat removal of a cell with the fan running in high speed.

9.2.5.3.1.1.4 Conclusion

The capability of the ultimate heat sink to perform its safety functions also has been verified. The analyses performed show that essential service water cold water basin temperature does not exceed 100°F during normal and potential accident conditions. For additional information see Reference 9.

9.2.5.3.1.2 Combination of Seismic Event and Drought

The ultimate heat sink can withstand combinations of events less severe than the design-basis events discussed in Subsection 9.2.5.3.1.1. The simultaneous occurrence of a 500-year seismic event with the 100-year 30-day duration drought is discussed below.

The 30-day 100-year recurrence drought flow at the intake is 739 cfs (Table 2.4-15). The corresponding water surface elevation at the intake with the Oregon Dam in place is 670.6 feet. The invert of the intake is at elevation 663.5 feet; thus, a water depth of 7.1 feet is available.

A 500-year seismic event at the site corresponds to a maximum horizontal ground acceleration of 0.05 g. The assumption of a failure of the Oregon Dam subject to this level of seismic loading is extremely conservative. However, if such a failure is postulated coincident with a 30-day 100-year recurrence drought, the water surface elevation at the intake would be 665 feet providing a depth of 1.5 feet of water on the floor of the intake.

A simplified evaluation of the seismic resistance of the Oregon Dam was made using data from Reference 1. The lateral resistance of sheet piling, liquefaction potential of the subsurface sand (Reference 2), and the stability of the dam were evaluated. On a conservative basis, it was determined that the dam can sustain a maximum horizontal ground acceleration of at least 0.1 g without failure.

From data presented in a recent study by Dames and Moore (Reference 3), it is estimated that an earthquake having a maximum acceleration equal to or greater than 0.1 g is about 0.3×10^{-3} per year. Hence, the probability of occurrence of an earthquake causing failure of the Oregon Dam is much less than 1/500.

It is estimated that the Rock River water temperature would be low enough for ice formation and accumulation, at most, for 2 months of the year. Therefore, the probability of not having the Rock River provide makeup water during a 30-day 100-year drought coincident with an earthquake having a maximum acceleration of 0.1 g would be no greater than:

$$P = (0.3 \times 10^{-3})\ (1/100)\ (2/12)$$

$$= 5.0 \times 10^{-7} \text{ occurrences/year}$$

Blockage of the intake structure by sedimentation is not expected to be a concern as discussed below.

In order to prevent the blockage of the intake structure by the aggradation of sediment and to maintain a permanent connection to

the main deep channel of the river, a sediment management system is installed. The system, which was rigorously tested using a scale hydraulic model at the University of Iowa's Institute of Hydraulic Research (Reference 7), consists of submerged upstream wing dams and precast concrete vanes in front of the intake. These structures plus river configuration maintain a connection between the main deep channel of the river and the intake structure. This system also prevents sediment from accumulating at the face of the intake.

The Iowa Institute of Hydraulic Research measured sediment concentration at the intake (Reference 4). The bed load at the intake mainly consists of fine sands. The particle size distribution is fairly uniform with a d_{50} = 0.4 mm. The suspended sediments are entirely in the fine silt to clay particles size range. Ninety percent of the suspended sediment is finer than 0.062 mm. Table 9.2-14 provides suspended sediment concentration at the intake.

The U.S. Geological Survey (USGS) has published suspended sediment data for the Rock River at Joslin for the water years 1975-1979. The drainage area of the Rock River at Joslin is 9549 square miles.

About 90% of the sediment carried by the river constitutes suspended sediment and it is kept in suspension due to the turbulence of the river. The sediment management system installed in the Rock River is designed to maintain the bed levels at the intake structure below the intake sill elevation and to maintain a channel connection to the main deep channel of the river. It is also designed to maintain the channel connection below the intake sill elevation along its entire length. Even during a combined seismic dam failure and 30-day, 100-year drought (with a water level as low as 665'-0"), sufficient water will be available at the intake structure. Since the Rock River is considered to be stable and does not meander in the vicinity of the intake, blockage of the intake with bed load is not probable.

9.2.5.3.1.3 Ice Buildup

Estimates of ice buildups on the Rock River are discussed below.

There is no data available regarding ice thickness on the Rock River. USGS indicated that the maximum thickness of ice observed at the discharge measuring stations at Rockton, Byron, and Como was 1.9 feet during the 1978-79 winter which is one of the severest winters of record.

The thickness of ice on lakes can be predicted by using the following equation (Reference 5):

$$h_i = L\ (1.06\ \sqrt{S})$$

where:

h_i = the ice thickness in inches,

L = the coefficient of snow cover and location conditions

S = the accumulated degree-days since freezeup, based on °F below freezing.

L = 0.75 to 0.65 for medium size lakes with moderate snow cover. Average annual snowfall at the Byron site is about 28 inches. Hence, L is taken at 0.65. The average annual freezing degree-days at Rockford, Illinois are 1123°F-day. The winter year 1976-1977 was the coldest year on record in Northern Illinois. The corresponding freezing degree-days at Rockford

were 1727°F-day. The above equation gives the thickness of ice cover for a lake at 23 inches during an average year and 29 inches for the coldest year (1976-1977). However, these values are for a lake and not directly applicable to rivers. For rivers, the flow resistance reduces the thickness of the ice. Freezeup starts in late November and reaches a maximum in March. Based on historic flow data, minimum flow occurs during August-September. During winter, the flow gradually increases from November to March. The minimum monthly flows and the average monthly flows at the intake based on the recorded flow data at Como gauging station are given in Table 9.2-15.

From the above discussion, it is clear that ice (maximum thickness is 29 inches) does not block the intake since the depth of water available is 7.1 feet under 30-day 100-year low flow conditions.

9.2.5.3.1.4 Frazzle Ice

Frazzle ice is a term referring to small ice particles which may form at the water surface if the air temperature is quite low and the mixing and conductivity of the water is insufficient to prevent freezing at the water surface. Based on operating experience, frazzle ice is not expected to affect the operation of the river intake at the Byron Station. To help prevent frazzle ice formation on the intake bar grills and traveling screens, circulating water system blowdown can be directed from the blowdown outfall structure to the intake of the river screen house. The line is routed underwater and outside of the bar grills. Nozzles direct the water up and along the bar grills. The warm blowdown water mixes with the incoming Rock River water to prevent formation of frazzle ice on the bar grills and traveling screens during winter operation.

Ice and sediment cannot block the intake because of the availability of the 7.1 foot depth of water. The probability of the dam failure during the 30-day 100-year recurrence drought and in the winter months is very low. Even in the case of no flow in the Rock River, the Oregon Dam will maintain a water depth of 6.75 feet over the invert of intake (the crest of the Oregon Dam is at 670.25 feet and the invert of intake is at 663.50 feet).

9.2.5.3.2 Essential Service Water Cooling Towers

An analysis of the effect of tornado missiles on the essential service water cooling towers is provided in UFSAR Section 3.5.4.1.

This page has been intentionally deleted.

Ice formation on the fill during cold weather operation is analyzed below:

A Category I temperature controller is provided to actuate each of two bypass valves per tower during winter operation. When the temperature of water in the basin drops to a predetermined value, the bypass valves open, diverting water from the cooling section to the cold water basin. When the temperature of water in the basin increases to a predetermined value, the bypass valves close.

Computer code TODTBM was utilized to verify that the basin temperature does increase from 50°F to 80°F. Under -25°F ambient conditions, the length of time required is 12.7 hours maximum under minimum refueling heat load conditions of 11.0×10^6 Btu/hr. Under extended bypass operating conditions, the greatest potential exists for vapor rising from the cold water basin and condensing on the fill. The maximum ice formation rate would be 0.1019 lb/sec for one tower, which would over a 13-hour period, result in an ice thickness of 0.15 inch on the lowest row of fill. However, each pound of ice that forms on the tile fill releases 144 Btu which tends to increase the temperature of the tile, and in addition the tile absorbs heat by radiation from the water in the basin. It is, therefore, doubtful that any ice will form on the tile fill.

The wind speed across the basin was assumed to be at an ambient average of 10.7 mph in arriving at 12.7 hours of continuous bypass operation. By comparison, a 4.2-mph wind speed results from operation of the fans at half speed. It is, therefore, concluded that if the fans are inadvertently left operating under minimum ambient temperature conditions concurrent with minimum refueling heat load, 12.7 hours of operation in the bypass mode is not exceeded.

When the fans are operated at half speed, air flow into the tower (i.e., across the basin) is 391,475 cfm per cell which results in a velocity across the basin of 4.2 mph. At full speed, the airflow is 782,950 cfm resulting in a velocity across the basin of 8.4 mph. The average ambient wind speed of 10.7 mph is therefore greater than the velocity produced by running the fans at rated speed. The critical wind speed derived from Ryan's equations is the wind speed at which the heat dissipated is equal to the heat added. The critical wind speed for -25°F ambient air and 0 psia ambient vapor pressure was found to be 137 mph at 40°F basin water temperature and 109 mph at 50°F basin water temperature. The maximum wind speed recorded at Rockford airport for the 1950-1970 period is 46 mph.

Inasmuch as the fans occupy only 36% of the total projected area above the drift eliminators, it is concluded that adequate cooling can be obtained from the remainder of the tower should a heavy snowfall occur. Moreover, a maximum snowfall of record, 44.8 inches during December 1909 through January 1910, would produce a loading of 70 lb/ft^2 which is well within the load carrying capability of the drift eliminator and its supports.

The design snow load of 104 lb/ft^2 from Subsection 2.3.1 is clearly for roofs of safety-related structures. A roof is a relatively flat receptacle for falling precipitation whereas the plastic angular drift eliminators are sheltered by 11 fan blades per cell, and to a lesser extent by the velocity recovery stacks. Thus, 70 lb/ft^2 is a conservative design snow load for the drift eliminators.

Failure of the nonseismic portion of the blowdown line would not affect the ability of the cooling towers to perform their safety function.

Blowdown for the SX system is taken from each of the return headers and delivered to the natural draft cooling tower (NDCT) cold water flume. The blowdown flow is limited by the restriction orifice to a maximum of 300 gpm. The blowdown lines up to and including the restriction orifices are Safety Category I, Quality Group C. Downstream of the restriction orifice in each blowdown line and the common blowdown line to the NDCT flume is Safety Category II, Quality Group D, since return of the blowdown water to the Rock River is not essential to the operation of the ultimate heat sink.

Meteorological data for worst case conditions is presented in Subsection 2.3.1.

The cooling tower is adequate for all worst case meteorological conditions concurrent with a loss-of-cooling accident coincident with a loss of offsite power of one unit and the concurrent orderly shutdown and cooldown from maximum power to cold shutdown of the other unit using normal shutdown operating procedures. The accident scenario also includes a single active failure.

9.2.5.3.3 Category I Essential Service Water Makeup System

The capability of the essential service water makeup pumps to function under low Rock River level conditions is discussed in Subsection 9.2.5.2.2. An analysis of the ability of the ultimate heat sink to function during flood conditions coincident with a loss of offsite power has been performed.

The combined event flood coincident with maximum wave runup will have an elevation of 703.39 and an annual probability of 1.0×10^{-6}. The engine is mounted on its subbase at elevation 703 feet 8-1/2 inches. The engine shaft centerline elevation is 705 feet 4 inches and the lower battery post elevation is approximately 703 feet 8 inches. It is anticipated that the latter elevation would be limiting under flood conditions. This is above the combined event plus maximum wave run up elevation and is anticipated to be the elevation at which the engine would stop.

The engine-driven essential service water makeup pumps will automatically start and continue to operate regardless of whether offsite power is available or not.

In the unlikely event that the engines are rendered inoperative by a flood level in excess of 703 feet 8 inches the onsite water wells will be powered from their respective Unit 1 ESF buses.

The ESW makeup pump drives at the Byron river screen house are the only Class 1E components not served by a redundant Class 1E ventilation system. The fans serving this area are non-safety-related components. However, on loss of electric power to this building, louvers at the outside walls of the building and ventilators located at the upper roof of the screen house open to allow the natural draft of outside air to cool the ESW makeup pump drives. The louvers and ventilators are sized such that the maximum temperature in the screen house will be 115°F.

The diesels are qualified to start at 40°F ambient diesel temperature, assuming their Jacket Water heaters are operating, with no loss of reliability. Based on discussions with the pump vendor (Stewart & Stevenson), the unavailability of the jacket water heater greater than or equal to a conservative minimum ambient diesel temperature of 70°F would not adversely affect the starting of the diesels. Routine checks are made of the RSH temperature and jacket water heater operability to assure readiness of the pump and diesel driver. The diesels may be started from the control room, if desired, to ensure they remain operable. A river screen house low temperature annunciator is provided which alarms at 50°F.

As discussed above, on loss of electric power to the river screen house, the louvers at the outside walls of the building and the ventilators located at the upper roof open. However, if the temperature within the river screen house falls below 60°F, these devices will close. An analysis was performed to determine the minimum temperature conditions which will be reached in the Byron river screen house following a prolonged loss of the building heaters and other building heat loads during extremely cold weather due to loss of power to the river screen house. The results of the analysis show that with the louvers closed and the diesel pumps not operating the river screen house temperature drops from 60°F to 40°F in approximately 20 minutes. Loss of power at the RSH is annunciated in the control room by the telemetry system powered by a backup d-c battery. Byron Station annunciator response procedures direct the operators to evaluate the operability of the diesels based on ambient diesel temperature. The diesels may be started from the control room, if desired, to ensure they remain operable.

A second analysis was performed to determine the minimum temperature conditions which will be reached in the Byron river screen house upon loss of the heating system. The analysis is based on outside conditions of -10°F, a 15-mph wind speed, and a 65°F inside temperature. Conservative values for the expected heat load in the building, including only one CW Makeup Pump operating, were used. The results of the analysis show that the river screen house temperature will not drop below 50°F. For this event, the diesel Jacket Water heaters would be operating and the diesels would start if required.

The diesel oil storage tank that supplies fuel to the diesel-driven essential service water makeup pump is not required during a tornado because the river screen house is not designed for tornados. Therefore, no credit is taken for the safety-related ESW makeup system during tornados.

9.2.5.3.4 Category II Deep Wells

The onsite deep well pumps and portions of the well water system, which are an alternate source of makeup water to the essential service water cooling towers, have been seismically qualified for the Safe Shutdown Earthquake. These wells are also protected from tornado generated missiles by reinforced concrete enclosures. These wells are available to provide makeup in the event that the Rock River screen house is unavailable due to flood, tornado, or combined failure of the Oregon Dam and low flow on the Rock River (Refer to Subsection 2.4.11.6).

9.2.5.3.5 Makeup and Minimum Basin Levels

Time dependent basin volume calculations were performed to establish the minimum acceptable SXCT basin water levels for

normal operations and to verify the adequacy of the SX river makeup and deep well makeup pumps. Scenarios were run with makeup available from either the SX river makeup or the deep well pumps. The following assumptions and inputs are used in the analysis:

a) The cooling tower evaporation rate is based on the maximum one-day evaporation period and time dependent heat load on the cooling towers.

b) SX blowdown is assumed to be a maximum of 600 gpm (300 gpm per basin). Blowdown is assumed to be isolated within two hours.

c) UHS cooling tower drift flow rate is assumed to 10.4 gpm.

d) Auxiliary Feedwater supply is assumed to be from the SX system. For the LOOP/LOCA scenario, AF flow to the accident unit is assumed to be 1280 gpm for the first 30 minutes. For the non-accident unit, AF flow was assumed to be initiated after four hours and the flow rate is based on the decay heat and a cooldown rate to 50°F/hr.

e) For the two unit plant trip scenario, time dependent AF flow is based on decay heat from a full power trip and a cooldown rate of 50°F/hr. Auxiliary Feedwater supply is assumed to be from the SX system.

f) A single active failure is postulated.

g) Manual initiation of deep well pump(s) is assumed to occur 1.5 hours into the event.

h) Makeup flow from a single SX river makeup pump is 1350 gpm. Makeup flow from a single deep well pump is 550 gpm.

i) Operator action is assumed after 3 hours to equalize SXCT basin levels by matching in-flow and out-flow to each basin.

The analysis showed that starting with the Technical Specification minimum acceptable water levels, basin levels would remain above the minimum acceptable usable water level. Initially the inventory losses exceed the makeup rate and basin level drops. The inventory losses drop off as the plant cools. Adequate water is available in the SX cooling tower basins to

accommodate the draw down of inventory until the makeup rate exceeds the inventory losses and the basins begin to refill. Both the SX river makeup pump and the deep well pump were demonstrated to be able to provide sufficient water to replenish the inventory loss and support the availability of a 30-day cooling water supply.

9.2.5.4 Tests and Inspections

The Ultimate Heat Sink is a common system shared by two units with both mechanical draft cooling towers normally in operation. Tower makeup may be switched from the Rock River source to the onsite wells. In this manner, continuous surveillance of all equipment availability and operability is maintained.

The essential service water cooling towers have been tested to validate their full-load power performance.

9.2.5.5 Instrumentation Requirements

Category I level switches are provided in each essential service water cooling tower basin. In the event of low level in a cooling tower basin, the corresponding essential service water makeup pump is automatically started. It continues operating until it is manually stopped, or exhausts the supply of diesel fuel oil in its 2000-gallon storage tank.

Local alarms and shutdown equipment for the diesel engine makeup pump drives are provided for high cooling water temperature in the closed cycle cooling system, low lubricating oil pressure, engine overspeed, and engine overcrank. Annunciation is transmitted to the main control room indicating "Engine Trouble," auto start, and auto trip for each engine.

9.2.5 Ultimate Heat Sink

9.2.5.1 Design Basis

The condenser water cooling facility at Braidwood Station is referred to as a cooling pond rather than as a cooling lake. This is consistent with the definition of "pond" in EPA Effluent Guidelines and Standards for Steam Electric Power Generation, 40 CFR 423, Section 432.11, which became effective in 1974.

The Braidwood Station's ultimate heat sink consists of an excavated essential cooling pond integral with the main Braidwood cooling pond. The excavation is made such that the essential pond remains intact in the event of failure of the Category II retaining dikes impounding the main cooling pond. Thus, the essential pond does not depend upon man-made structural features for retention so that redundancy, per criteria, for ultimate heat sinks for nuclear power plants is not required.

Figure 9.2-7 shows the combined heat rejection rate versus time for the unit undergoing post-LOCA cooldown, plus heat rejection rate versus time for the unit undergoing safe shutdown. The LOCA unit containment heat load was maximized to determine the limiting heat load to the ultimate heat sink. Refer to Byron Subsection 9.2.5.3.1.1.1 for additional discussion of the containment heat load calculations, which also apply to Braidwood station. Figure 9.2-8 shows area and volume versus surface elevation in feet for the essential cooling pond. The maximum operating level of the essential cooling pond is assumed to be 590 feet above mean sea level, at which point it loses communication with the main cooling pond.

The maximum heat load on the UHS consists of one unit undergoing post-LOCA cooldown concurrent with a LOOP, and the unaffected unit undergoing a safe non-accident shutdown. Both units are assumed to be at full power operation prior to the shutdown. The main cooling pond is assumed to be unavailable at the beginning of the accident. Only the UHS is assumed to be available. The UHS is the source of water for the ESW pumps to cooldown the plant.

9.2.5.2 System Description

Under normal circumstances, the essential cooling pond is indistinguishable from the remainder of the Braidwood cooling pond. The essential cooling water intakes and discharges are arranged, however, to extract water from and return water to the cooling pond in that portion which would become the essential cooling pond, should failure of the Category II cooling pond retaining dikes occur.

The substructure of the lake screen house, which houses the essential service water intakes, is designed as a seismic structure. Postulated failure of nonseismic portions of the structure and equipment will not affect the intakes due to the location of the intakes away from any such structures and equipment. In addition, the intakes are protected by concrete enclosures protruding above the top of the mat. The three

intakes are also separated by 26.5 and 30 feet to prevent a single object from blocking two intakes.

The essential service water discharge structure is Seismic Category I. The essential service water discharge piping downstream of the discharge structure has been classified as non-safety related. That is, since the pipes are open ended (non-pressure retaining) and in the unlikely event of a loss of piping integrity, the discharge flow would still return to the ultimate heat sink, the pipes do not perform a safety related function and do not need to comply with the requirements of ASME Section III, Class 3.

During normal operation, the makeup and blowdown lines are used for the control of cooling pond water chemistry. Additionally, sulfuric acid is periodically injected into the cooling pond at the circulating water discharge for pH and alkalinity control of the water.

Makeup and blowdown of the essential pond is not required for fulfillment of its safety function. The makeup and blowdown lines from the Kankakee River serving the cooling pond are Category II and may not be available following a design-basis event. To cover this situation, the essential pond is sized to provide sufficient water for a minimum 30-day period without requiring makeup, per criteria for ultimate heat sinks for nuclear power plants. Peak makeup requirements are only on the order of 1000 to 2000 gpm which can be provided by a temporary pumping arrangement. The time period for restoration of the normal facilities can thus be extended indefinitely. If blowdown of the pond is deemed necessary to preserve system chemistry during long-term operation, temporary arrangements can be made.

9.2.5.3 Safety Evaluation

The Braidwood Station's ultimate heat sink is designed to withstand the separate occurrence of either the safe shutdown earthquake or the probable maximum flood on the cooling pond and in Crane Creek, Granary Creek, the Mazon River, and the Kankakee River, which is consistent with the requirements for ultimate heat sinks for nuclear power plants. The essential cooling pond is sufficiently oversized to permit a minimum of 30 days operation with no makeup.

For the effects of the probable maximum flood with coincident wind wave activity see Subsection 2.4.8.2.6.

Worst period of record conditions for maximum temperature and evaporation were determined by performing a computer analysis of the weather data furnished by the U.S. Weather Bureau for Peoria, Illinois, January 1948 to August 1976 (Tape 1625). Because Peoria weather data was not available from January 1952 through December 1956, Springfield data was substituted for that period. The data consists of 3-hour interval readings for the wind speed, dry bulb and dew-point temperatures, and cloud cover information from which long and short wave solar radiation may be calculated.

These data were used to calculate the temperature and evaporative loss of a body of water having the surface area and depth of the ultimate heat sink while subject to the average 30 day heat input of the ultimate heat sink. The heat exchange at the surface and evaporative loss is based on methods described in Reference 6. Dates and weather parameters giving maximum 5 day, 24 hour, and 30 day average water temperatures were assembled for use as a design weather period of 36 days for maximum temperature analyses of

the ultimate heat sink. Dates and weather parameters giving maximum 30 day average net evaporative loss (actual maximum evaporation less precipitation) were saved for use as a maximum design water loss period of analysis.

These periods have the following dates and parameters:

Maximum 30 Day Average Net Evaporative Loss

15:00 on June 5, 1971 to 14:00 on July 5, 1971

Mean dry bulb temp	(°F)	76.6
Mean dew point temp	(°F)	60.1
Mean wind speed	(mph)	8.4
Total precipitation	(inches)	0.75

Maximum Temperature

Worst 5 days	18:00 on July 28, 1955 to 17:00 on August 2, 1955
Worst 24 hours	15:00 on July 29, 1955 to 14:00 on July 30, 1955
Worst 30 days	15:00 on July 7, 1955 to 14:00 on August 6, 1955

	Mean Dry Bulb Temp. (°F)	Mean Wind Speed (mph)
Worst 5 days	85.0	5.9
Worst 24 hours	86.1	7.5
Worst 30 days	81.4	8.5

Weather conditions for the maximum temperature periods are conducive to poor heat rejection because of low wind speeds as well as high ambient temperature. Although higher temperatures are recorded, the simultaneously occurring wind speeds and other parameters yielded lower calculated water temperatures than the periods given.

Heat sink temperatures and evaporation losses for these weather periods were evaluated with the computer model LAKET. In the model, the heat sink is represented by a number of small segments upon which mass and heat balance calculations are performed. The model predicts the transient response of the heat sink to all of the transient phenomena of plant heat rejection, wind speed, dry bulb, and dew-point air temperature and solar radiation.

Results obtained for the heat sink inlet and outlet temperatures, lake drawdown, and natural temperatures are shown in the following exhibits for both worst temperature conditions (Figures 9.2-9, 9.2-10, and 9.2-11) and worst evaporation conditions (Figures 9.2-12, 9.2-13, and 9.2-14).

The analysis demonstrates that for an initial UHS temperature of 100°F, the subsequent UHS temperatures remain below 100°F. The maximum drawdown under worst case evaporation conditions including the power uprate is 1.71 ft. This drawdown is based upon an average seepage rate of 0.69 cfs. This analysis, performed in accordance with Regulatory Guide 1.27, Revision 2, shows that the Braidwood ultimate heat sink has the capacity for cooling the plant in the event of a postulated LOCA in one unit and simultaneous shutdown of the other unit, assuming extreme meteorological conditions.

9.2.5.4 Tests and Inspections

The essential cooling pond was constructed by excavating natural soil to form the pond in the bottom of the Braidwood cooling pond. Prior to filling the Braidwood cooling pond, a survey was made of the perimeter of the essential cooling pond to confirm the elevations of the soil on the exterior of the essential cooling pond. After the Braidwood cooling pond was filled, a survey of the essential cooling pond was made by hand sounding or by means of a fathometer or by another comparable method.

9.2.5.5 Instrumentation Requirements

There are no instrumentation requirements for operation of the essential service water cooling pond which is a passive type of heat sink with no mechanical, electrical, or pneumatic devices associated with it.

9.2.6 Condensate Storage Facilities

9.2.6.1 Design Bases

The principal purposes of this system are:

a. to provide surge capability for the main condensate system (Subsection 10.4.7), and

b. to provide a source of demineralized water for testing the auxiliary feedwater system (Subsection 10.4.9.4).

No part of the system is safety-related, thus it is designated Safety Category II.

9.2.6.2 System Description

The condensate storage facility for the station consists of two tanks, with associated pumps and valves, to serve both Units 1 and 2. The tanks at Byron have a capacity of 500,000 gallons each. The tanks at Braidwood have a capacity of 650,000 gallons each. A diagram is provided in Drawings M-39 and M-124.

During periods of startup or load change, transient conditions exist in the power conversion system (steam generator, turbine, etc.) which necessitate changes in the water inventory of that system. On a high hotwell level, flow is manually diverted from the system. On a low level, makeup pumps are provided for supplying condensate from the condensate storage tanks to the main condenser hotwell. Secondary functions of this system are:

a. surge capability for the auxiliary steam boilers, and

b. alternate supply for the pump seal water system.

A connection is also provided from the makeup demineralized water system, which serves as the ultimate supply source for the condensate storage system.

It is intended to use the stored condensate in this system, if it is available when required, as a water source for the auxiliary feedwater system. A low-level alarm is provided on the condensate storage tanks to inform the operator if sufficient condensate is available for this purpose. When pressure in the supply line to the auxiliary feedwater pumps is low, water supply to the pump is automatically switched over to the essential service water system. A Safety Category II recirculation line is also provided to these tanks for the testing of the auxiliary feedwater pumps on a periodic basis. The condensate storage tank is constructed of aluminum, which has high resistance to condensate water which might contain

chemicals, and is insulated to prevent freezing. The tank is also provided with heaters to prevent freezing.

9.2.6.3 Safety Evaluation

Chapter 12.0 contains a discussion of the radioactivity levels of the isotopes involved. It is seen that these levels are far below the limits of 10 CFR 20.

9.2.6.4 Testing and Inspections

All welded points in the tank are radiographically tested in accordance with the requirements of ANSI B96.1 1967. Leak testing and hydrostatic testing are performed as installation tests.

9.2.6.5 Instrumentation Application

Level indication is provided in the main control room for each condensate storage tank and alarms are initiated in the main control room on high and low levels.

Makeup to the condensate storage tanks is controlled from a tank level controller which varies the flow of makeup demineralizer water to the storage tank.

Condensate storage tank thermostats, control tank heaters, and heat tracing are provided to prevent freezing of tanks contents. Low water temperature is alarmed in the main control room.

The condensate makeup pumps have handswitches in the main control rooms.

9.2.7 Plant Chilled Water Systems

The plant chilled water systems consist of the following independent subsystems:

a. containment chilled water system,

b. service building chilled water system,

c. auxiliary building chilled water system, and

d. control room chilled water system.

9.2.7.1 Containment Chilled Water Systems

This system provides chilled water to the reactor containment fan cooler (RCFC) chilled water coils of Units 1 and 2, during normal plant operating conditions.

9.2.7.1.1 Design Bases

9.2.7.1.1.1 Safety Design Bases

a. The containment chilled water system is non-safety-related.

b. The chilled water piping components within each containment are supported in accordance with Seismic Category I criteria to preclude damage to safety-related components during a safe shutdown earthquake.

c. At penetrations through the containment, the chilled water supply piping is equipped with a motor-operated valve outside and a check valve inside the containment in accordance with NRC General Design Criterion 56, to ensure containment isolation. Also, the return piping is equipped with a motor-operated valve outside the containment in accordance with NRC General Design Criterion 57, to ensure containment isolation.

9.2.7.1.1.2 Power Generation Design Bases

a. The system cooling capacity is based on heat losses from piping and valves, equipment, reactor pressure vessel, and unidentified steam leakages. The chilled water leaving and entering the system is approximately 42°F and 50°F, respectively.

b. Two full-capacity redundant chilled water circuits are provided to meet the power generation objectives.

c. The power supply to the refrigeration units is designed to allow a manual connection to the ESF power supply, if the normal electric power is not available.

d. The chilled water pumps may be transferred manually to the ESF buses upon loss of offsite power.

e. Water from the essential service water system is used to remove heat from the condenser of the containment refrigeration units during normal plant operation. Following a design-basis accident (DBA), the refrigeration unit is isolated from the

essential service water system. (For further details see Subsection 9.2.1.)

9.2.7.1.2 System Description

The schematic diagram of the containment chilled water system is shown in Drawing M-118-4 through -7. Equipment parameters of principal system components are listed in Table 9.2-7.

a. A separate chilled water system is provided for each containment.

b. The system is designed to provide an adequate quantity of chilled water to the RCFC units at a temperature of 42°F from the refrigeration unit with a ΔT of approximately 8°F across the refrigeration unit. Each of the Unit 1 and 2 containment chilled water systems consist of two, 100% capacity chilled water circuits, each comprised of one chilled water pump, one centrifugal refrigeration unit, chilled water coils located in the reactor containment fan coolers, associated piping and instrumentation.

   Refrigerant R-11 is used in the containment refrigeration units.

c. The containment refrigeration units are located on elevation 401 feet 0 inch of the auxiliary building for both Units 1 and 2.

d. Isolation valves are provided in each supply and return line at the point of containment penetration. These valves are powered from the essential buses and can be manually operated from switches provided on the main control board.

e. The containment chilled water system works in conjunction with the primary containment ventilation system to meet the cooling requirements inside the containment. For further details see Subsection 9.4.9.

f. Instrumentation and Controls

   1. Each piece of equipment is manually started from the main control panel in the control room.

   2. The refrigeration unit is interlocked with a flow switch provided in the chilled water line leaving the refrigeration unit; the unit does not start until flow is established. Freeze protection and other necessary safety protections, such as high refrigerant head pressure,

low suction pressure, and lubricant oil failure, are provided with the refrigeration unit. High temperature of the water entering the refrigeration unit and loss of water flow through the refrigeration unit are annunciated on the local control panel. Each refrigeration unit is provided with the necessary controls to maintain the design outlet water temperature.

3. Thermocouples are provided in the RCFC discharge air duct in the containment to monitor temperature. These temperatures are indicated in the main control board.

9.2.7.1.3 Safety Evaluation

a. The containment chilled water system is a non-safety-related system. A system failure analysis is presented in Table 9.2-8.

b. All piping and supports within the containment, and all containment isolation valves are designed to Seismic Category I requirements.

c. Refer to Section 3.2 for further classification of structures and systems.

9.2.7.1.4 Testing and Inspection

a. All equipment is factory inspected and tested in accordance with the applicable equipment specifications and codes. Component demonstration tests are conducted on the system.

b. The equipment manufacturer's recommendations and station practices were considered in determining required maintenance.

9.2.7.2 Service Building Chilled Water System

This system provides chilled water to the chilled water coils in the following systems:

a. service building HVAC systems,

b. laboratory HVAC system,

c. control room office HVAC system,

d. turbine building future offices HVAC system

e. secondary sample room HVAC system, and

f. radwaste facility HVAC system.

9.2.7.2.1 Design Bases

9.2.7.2.1.1 Safety Design Bases

The service building chilled water system is non-safety-related; therefore, it has no safety design bases.

9.2.7.2.1.2 Power Generation Design Bases

a. The system cooling capacity is based on cooling the supply air to each air handling unit in the systems listed previously.

b. Two 100% capacity redundant chilled water circuits consisting of refrigeration units, primary chilled water pumps, and booster pumps are provided.

c. Water from the nonessential service water system is used to remove heat from the condenser of the service building refrigeration units during normal plant operation.

d. On loss of offsite power, the service building chilled water system is inoperative.

9.2.7.2.2 System Description

The schematic diagram of the service building chilled water system is shown in Drawing M-118-2, -3 and -10. Equipment parameters of principal system components are listed in Table 9.2-7.

a. The system is designed to provide sufficient quantity of water to cool the supply air for the areas served by the service building HVAC system, laboratory HVAC system, control room offices HVAC system, turbine building future offices HVAC system, and the secondary sample room HVAC system.

b. The service building chilled water HVAC system consists of one chilled water compressor tank, air separator, two 100% capacity chilled water circuits each comprised of one primary chilled water pump, one booster pump, and one centrifugal refrigeration unit.

c. The service building refrigeration units are located on elevation 433 feet 0 inch of the service building.

d. Instrumentation and Controls

1. The service building refrigeration units are designed with provisions for manual start and stop function. The handswitches are located on the local control panels. Each refrigeration unit is interlocked with a flow switch provided in the chilled waterline entering each refrigeration unit.

2. Freeze protection and other safety protections, such as high refrigerant head pressure, low suction pressure, and lubricant oil failure are provided with each refrigeration unit. High temperature of the water entering the refrigeration unit and loss of water flow through the refrigeration unit are annunciated on the local control panel.

9.2.7.2.3 Safety Evaluation

The service building chilled water system is a non-safety-related system. See Table 9.2-8 for system failure analysis.

9.2.7.2.4 Testing and Inspection

a. All equipment is factory inspected and tested in accordance with the applicable equipment specifications and codes. Component demonstration tests are conducted on the system.

b. The equipment manufacturer's recommendations and station practices are considered in determining required maintenance.

9.2.7.3 Auxiliary Building Chilled Water System

This system provides chilled water to the auxiliary building HVAC system chilled water coils.

9.2.7.3.1 Design Bases

9.2.7.3.1.1 Safety Design Bases

a. The auxiliary building chilled water system is non-safety-related.

b. The refrigeration units are designed and supported to Seismic Category I requirements to preclude damage to Safety Category I equipment.

9.2.7.3.1.2 Power Generation Design Bases

a. The system cooling capacity is based on cooling the auxiliary building HVAC system supply air (100% outside air) from 95°F to 70°F.

b. Two (Byron) or three (Braidwood) 50% capacity refrigeration units and chilled water pumps are provided to meet the power generation objectives. Two refrigeration units and two chilled water pumps are required for normal operation when the outside air temperature exceeds 70°F.

c. Water from nonessential service water system is used to remove heat from the condenser of the auxiliary building refrigeration units during normal plant operation.

d. On loss of offsite power, the refrigeration units and chilled water pumps have provisions to be manually transferred to the ESF buses.

9.2.7.3.2 System Description

The schematic diagram of auxiliary building chilled water system is shown in Drawing M-118-8 and -9. Equipment parameters of principal system components are listed in Table 9.2-7.

a. The system is designed to provide an adequate quantity of chilled water to the auxiliary building HVAC system chilled water coils at a temperature of 55°F from the refrigeration unit with a ΔT of 16°F across the refrigeration unit.

b. The auxiliary building chilled water system consists of a compression tank, air separator, two (Byron) or three (Braidwood) 50% capacity chilled water circuits, each comprised of one chilled water pump and one centrifugal refrigeration unit. These circuits serve the two chilled water coils banks of the auxiliary building HVAC system. Refer to Subsection 9.4.3.4 for further discussion of the auxiliary building HVAC system.

c. The auxiliary building refrigeration units are located on elevation 463 feet 0 inches of the auxiliary building.

d. Instrumentation and Controls

The auxiliary building refrigeration units are designed with provisions for manual start and stop functions. The handswitches are located on the local control panel. Each refrigeration

unit is interlocked with a flow switch provided in the chilled water lines entering each refrigeration unit. Freeze protection and other safety protections, such as high refrigerant head pressure, low suction pressure, and lubricant oil failure are provided with each refrigeration unit.

High temperature of the water entering the refrigeration unit and loss of water flow through the refrigeration unit are annunciated on the local control panel.

9.2.7.3.3 Safety Evaluation

a. The auxiliary building chilled water system is a non-safety-related system. See Table 9.2-8 for system failure analysis.

b. The refrigeration units are supported to Seismic Category I requirements.

c. Refer to Section 3.2 for further classification of structures and systems.

9.2.7.3.4 Testing and Inspection

a. All equipment is factory inspected and tested in accordance with the applicable equipment specifications and codes. Component demonstration tests are performed on the system.

b. The equipment manufacturer's recommendations and station practices are considered in determining required maintenance.

9.2.7.4 Control Room Chilled Water System

This system provides chilled water to the control room HVAC system chilled water coils, during normal and abnormal plant operating conditions.

9.2.7.4.1 Design Bases

9.2.7.4.1.1 Safety Design Bases

a. The control room chilled water system is a Safety Category I system. All the components of the system are designed in accordance with applicable ASME Codes and IEEE Standards.

b. Classification of all the components of this system are shown in Section 3.2. All portions of this

system are protected from tornadoes, missiles, pipe whip, and flooding.

c. Water from the essential service water system is used in normal and abnormal conditions to remove heat from the condenser of control room refrigeration units. For further details see Subsection 9.2.1.

d. Two 100% capacity equipment trains are provided to meet the single failure criteria.

e. The electrical equipment in each train is powered from independent ESF electrical buses.

9.2.7.4.1.2 Power Generation Design Bases

a. The system cooling capacity is based on cooling the control room HVAC system supply air to dissipate the heat generated from all the equipment contained within the control room envelope.

b. Two full-capacity redundant chilled water circuits are provided to meet the power generation objectives.

9.2.7.4.2 System Description

The diagram of the control room chilled water system is shown in Drawing M-118-1. Equipment parameters of principal components are listed in Table 9.2-7.

a. The system is designed to provide a sufficient quantity of chilled water to the control room HVAC system chilled water coils at a temperature of 42°F from the refrigeration unit with a ΔT of 10°F across the refrigeration unit. Refrigerant R-114 is used in the control room refrigeration unit. Each refrigeration unit serves one cooling coil with no provisions for cross-tie. For further discussion of the control room HVAC system refer to Subsection 9.4.1 and Section 6.4.

b. The control room refrigeration units are located on elevation 383 feet 0 inch of the auxiliary building.

c. The control room chilled water system consists of two full capacity independent subsystems. Each subsystem consists of a chilled water pump, one refrigeration unit, chilled water coils, one air separator, one chilled water compressor tank and associated piping, valves, and instrumentation.

d. The evaporator tubes and the condenser tubes of the refrigeration unit are designed to include an allowance for tube fouling of 0.0005 (hr-ft^2-°F)/Btu and 0.0015 (hr-ft^2-°F)/Btu, respectively.

e. All the components of the system are designed in accordance with the Seismic Category 1 and Class 1E requirements.

f. Instrumentation and Controls

Each piece of equipment of the control room chilled water system is manually started from the HVAC panel in the main control room. Each compressor of the refrigeration unit is interlocked with a flow switch provided in the chilled water loop. Freeze protection and other necessary safety protections such as a high refrigerant head pressure, low suction temperature, and lubricant oil failure are provided with the refrigeration unit. High temperature of the water entering the refrigeration unit is alarmed on the main control panel. Loss of water flow through the refrigeration unit is indicated on the local control panel. Each refrigeration unit is provided with the necessary controls to maintain the design outlet water temperature.

Refer to Section 7.3 for further controls and instrumentation details.

9.2.7.4.3 Safety Evaluation

a. The control room chilled water system is a Seismic Category I system.

b. Loss of one control room chilled water system does not affect the safe shutdown capability of the station, as a redundant control room chilled water system is provided.

c. A system failure analysis is presented in Table 9.2-8.

d. Refer to Section 3.2 for further classification of structures, systems, and components.

9.2.7.4.4 Testing and Inspection

a. All equipment is factory inspected and tested in accordance with the applicable equipment specifications and codes. Preoperational tests are performed on the system.

b. The equipment manufacturer's recommendations and station practices are considered in determining required maintenance.

9.2.8 Station Heating System

This system provides hot water to the following equipment to meet the station space heating requirements:

a. unit heaters located in the auxiliary building, Units 1 and 2 turbine building, fuel handling building, service/radwaste building and waste treatment area, HVAC equipment rooms, Units 1 and 2 heating steam boiler rooms, Units 1 and 2 diesel-generator rooms, Units 1 and 2 diesel oil rooms;

b. unit heaters located in the lime softeners building (Braidwood only);

c. auxiliary building HVAC system heating coils;

d. containment normal purge system heating coils;

e. miscellaneous HVAC system control room offices heating coils;

f. train shed heating coil;

g. laboratory HVAC system preheating and heating coils;

h. radwaste facility HVAC system heating coils;

i. machine shop ventilation system heating coil;

j. turbine building HVAC system future offices heating coil; and

k. turbine building battery room and secondary sample room heating coil.

9.2.8.1 Design Bases

9.2.8.1.1 Safety Design Bases

a. The hot water heating system is non-safety-related.

b. Though classified as non-safety-related equipment, the unit heaters in the auxiliary building are

supported in accordance with Seismic Category I criteria to preclude damage to safety-related components during a safe shutdown earthquake (SSE).

9.2.8.1.2 Power Generation Design Bases

a. The station heating system is designed to heat the various HVAC systems' supply air to compensate for transmission and infiltration heat losses from the fuel handling building, auxiliary building, Units 1 and 2 turbine building, service/radwaste building, water treatment area, and lime softener area (Braidwood only) of the plant.

   Horizontal air discharge unit heaters and finned tubes are used to supplement the ducted heating systems and compensate for transmission and infiltration heat losses through walls and roofs of the plant. Vertical downward air discharge unit heaters are used to compensate for infiltration heat losses caused by open roll-up doors to the outside.

b. Four 50% capacity main hot water circulating pumps are provided to meet the station requirements.

c. Water from the station demineralized water system is used for the initial fill and makeup requirements of the system.

d. All heating coils in ventilation systems which induce a minimum 30% or more of outside air are provided with booster pumps to keep full flow through coils to prevent them from freezing.

e. Three-way mixing valves are provided to modulate the hot water flow to the heating coils, to achieve desired air temperatures.

f. Strainers are provided at the suction of all the pumps to protect the pumps and to prevent plugging of heating coils.

g. A relief valve set at 150 psig is provided to protect the system from overpressurization.

9.2.8.2 System Description

The schematic diagram of the station heating system is shown in Drawing M-72. Equipment parameters of principal system components are listed in Table 9.2-9.

a. The system consists of four 50% capacity hot water circulating pumps, two 50% capacity heating steam

heat exchangers, unit heaters, finned tubes, heating coils, heating coil booster pumps, air separator, hot water expansion tank, mixing valves, strainers, associated piping, valves, and instrumentation.

b. The hot water to the heating equipment is supplied in four main supply lines from the heat exchanger main header and all the returns are connected to a main header and returned to the pump suction.

c. The system utilizes heat from two steam heat exchangers that use extraction steam (from low-pressure turbine extraction) during normal plant operation and steam from the auxiliary boiler during unit shutdown or during plant operating load of 40% or less.

d. The air-operated three-way mixing valves are modulated by a temperature controller which senses the air temperature leaving the heating coil, to maintain required air temperatures. Failure modes of these valves on loss of instrument air to the valve operator are as indicated in Drawing M-72.

e. Instrumentation and Controls

1. The station heating system hot water circulating pumps are provided with manual start/stop handswitches that are mounted on a local control panel. All the booster pumps have auto or manual start/stop provisions. All the handswitches for these pumps are located on the local control panels.

2. A flow control valve modulated by the hot water temperature controller at the heat exchanger discharge line controls the flow of steam to the heat exchanger to maintain the required hot water temperature. The flow control valve is provided on the hot water inlet to the heat exchanger to maintain the design flow through the heat exchanger and bypass the rest of the flow through the heat exchanger bypass line.

3. All three-way mixing valves are modulated by locally mounted air temperature controllers.

4. Each unit heater is provided with a thermostat that automatically starts the unit heater fan when room temperature is below the setpoint. Fan shuts off automatically when setpoint is exceeded.

5. Flow balancing valves are provided to initially balance the system. Pressure indicators are provided on the suction and discharge lines of the heat exchange coils. Temperature wells are provided at many points of the system to measure the water temperature, if desired.

9.2.8.3 Safety Evaluation

The station heating system is a non-safety-related system. See Table 9.2-10 for system failure analysis.

9.2.8.4 Testing and Inspection

All equipment is factory inspected and tested in accordance with the applicable specifications and codes. During various stages of construction, field inspections are made of the equipment. Component demonstration tests are performed on the system.

The equipment manufacturer's recommendations and station practices are considered in determining required maintenance.

9.2.9 References

1. Schumaker and Svoboda, Inc., "Oregon Dam Inspection and Evaluation," report prepared for the Dept. of Conservation, State of Illinois, January 1979.

2. H. B. Seed and I. M. Idriss, "Simplified Procedure for Evaluating Soil Liquefaction Potential," Journal of Soil Mechanics and Foundations Division, ASCE, Vol. 97, No. SM9, September 1971.

3. Dames & Moore, "Seismic Ground Motion Hazard at Zion Nuclear Power Plant Site," July 1980.

4. R. Ettema and T. Nakato, "Sediments in the Byron Power Plant," IIHR Report No. 82, Iowa Institute of Hydraulic Research, University of Iowa, Iowa City, Iowa, January 1981.

5. V. T. Chow, Handbook of Applied Hydrology, Chapter 23, McGraw Hill Co., New York, 1964.

6. P. J. Ryan and D. Harleman, "An Analytical and Experimental Study of Transient Cooling Pond Behavior," Report No. 161, R. M. Parsons Laboratory for Water Resources and Hydrodynamics, M.I.T.

7. Iowa Institute of Hydraulic Research, "Hydraulic Model Study of Sediment Management Alternatives, Commonwealth Edison Byron Station, River Water Intake Structure," Report No. 198, Revision 0.

8. T. K. Schuster (Commonwealth Edison Company) to T. E. Murley (Nuclear Regulatory Commission) letter dated January 9, 1992, transmitting the "Byron Station UHS Design Basis Reconstitution Final Report."

9. Safety Evaluation by the Office on Nuclear Reactor Regulation Related to Amendment No. 173 for Byron Station Units 1 and 2, dated June 14, 2011.

90

TABLE 9.2-1

ESSENTIAL SERVICE WATER HEAT LOADS

ITEM	NORMAL	LOCA	LOSS-OF-OFFSITE POWER OR SHUTDOWN
Diesel-generator coolers		X	X
Containment fan coolers	X	X	X
Component cooling heat exchangers	X	X	X
Diesel- and Motor-driven auxiliary feedwater pump lube oil coolers		X	X
Diesel-driven auxiliary feedwater pump cubicle coolers		X	X
Diesel-driven auxiliary feedwater pump diesel coolers		X	X
Essential service water pump lube oil coolers	X	X	X
Essential service water pump cubicle coolers	X	X	X
Centrifugal charging pump cubicle coolers	X	X	X
Centrifugal charging pump oil coolers	X	X	X
Positive displacement charging pump cubicle cooler	X		
Safety injection pump cubicle coolers		X	
Safety injection pump oil coolers		X	
Containment spray pump cubicle coolers		X	

TABLE 9.2-1 (Cont'd)

ITEM	NORMAL	LOCA	LOSS-OF-OFFSITE POWER OR SHUTDOWN
Residual heat removal pump cubicle coolers		X	X
Control room refrigeration units	X	X	X
Spent fuel pit pump cubicle coolers	X	X	X
Primary containment refrigeration units	X		

TABLE 9.2-2

SINGLE-FAILURE ANALYSIS OF THE ESSENTIAL SERVICE WATER SYSTEM

COMPONENT	FAILURE	ALTERNATIVE
Essential service water pump (1SX01PA/B, 2SX01PA/B)	Failure to operate	Two full-capacity pumps available in each unit.
Essential equipment cooler	Failure to operate	All equipment which is relied upon to place the unit in a safe shutdown condition and which requires cooling water to operate is redundant so that loss of cooling water to a single piece of equipment will still leave its redundant counterpart in operable condition.
Essential service water supply line	Break	Remaining supply line supplies water to one remaining loop in each unit.
Essential service water return line	Break	Remaining return line services one remaining loop in each unit.
Diesel-driven auxiliary feedwater pump engine driven cooling water booster pump (1SX04P, 2SX04P)	Failure to Operate	Failure of this pump would prevent cooling water flow to the diesel-driven auxiliary feedwater pump and its auxiliaries, which could result in overheating of the diesel-driven auxiliary feedwater pump. The redundant motor-driven AFW pump would remain available.

TABLE 9.2-2 (Cont'd)

COMPONENT	FAILURE	ALTERNATIVE
Control room refrigeration unit condenser isolation valves (0SX063A/B) (Braidwood only)	Failure to operate	Failure of a valve to operate when required would affect, at most, one of the two trains of the control room chillers. The redundant train would be unaffected. This failure would not adversely affect essential service water flow to any other components.
Common component cooling heat exchanger outlet valves (0SX146, 0SX147)	Failure to operate	Failure of one of these valves could preclude aligning the common component cooling heat exchanger with one of the two units (0SX146-Unit 1, 0SX147 - Unit 2). A single component cooling heat exchanger is adequate to support one unit's requirements. The redundant system is unaffected in either case and remains available.
Common component cooling heat exchanger inlet valves (1SX005, 2SX005)	Failure to operate	Failure of one of these valves could preclude aligning the common component cooling heat exchanger with one of the two units (1SX005 - Unit 1, 2SX005 - Unit 2). A single component cooling heat exchanger is adequate to support one unit's requirements. The redundant system is unaffected in either case and remains available.
Essential service water pump discharge check valves (1SX002A/B, 2SX002A/B)	Failure to operate	Failure of one of these valves to operate may affect, at most, flow from one essential service water pump. The remaining full-capacity pump would be unaffected and would remain available in all cases.

TABLE 9.2-2 (Cont'd)

COMPONENT	FAILURE	ALTERNATIVE
RCFC Essential service water cooling coil containment isolation valves (1SX016A/B, 2SX016A/B, 1SX027A/B, 2SX027A/B)	Failure to operate	These are supply (SX016) and return (SX027) containment isolation valves for the RCFC cooling coils. Failure of any one valve could affect one train (2/4) of RCFCs. The redundant train of RCFCs (2/4) is unaffected.
Diesel-driven auxiliary feedwater pump cubicle cooler flow control valves (1/2SX168)	Failure to operate	During normal operation, the diesel-driven auxiliary feedwater pump cubicle cooler flow control valves modulate SX flow in response to room temperature. Failure of the valves would prevent cooling water flow to the cubicle cooler, which could result in high room temperatures and overheating of the diesel driven auxiliary feedwater pump. The redundant motor-driven pump would remain available.
Diesel-driven auxiliary feedwater pump cooling water supply valves (1SX173, 2SX173) and Diesel-driven auxiliary feedwater pump cooling return valves (1SX178, 2SX178) Braidwood only, Engine driven cooling water pump discharge check valves (1SX174, 2SX174)	Failure to operate	Failure of any one of these valves could prevent cooling water flow to the diesel-driven auxiliary feedwater pump and its auxiliaries, which could result in overheating of the diesel-driven auxiliary feedwater pump. The redundant motor-driven pump would remain available.

TABLE 9.2-2 (Cont'd)

COMPONENT	FAILURE	ALTERNATIVE
Primary containment refrigeration unit bypass valves (1SX147A/B, 2SX147A/B)	Fail closed	During normal operation, the primary containment refrigeration unit inlet and outlet valves are open, and the bypass valve functions as a modulating valve. In emergency conditions, the inlet and outlet valves close, and the bypass valve moves to the full open position. If the bypass valve failed closed, all flow in this flow path would be blocked. Since the primary containment refrigeration units are downstream of the RCFC cooling coils, this failure would have the effect of blocking flow to one train (2/4) of RCFCs. The redundant train of RCFCs (2/4) will be unaffected.
Diesel generator heat exchanger outlet valves (1SX169A/B, 2SX169A/B)	Failure to operate	Failure of one of these valves would disable cooling to the diesel generator jacket water cooler, potentially resulting in failure of the diesel generator. The redundant diesel generator will remain available.

TABLE 9.2-3

COMPONENT COOLING SYSTEM DESIGN PARAMETERS

GENERAL	
Service water supply temperature, °F	100
Component cooling water design temperature, °F	105/120 (max)
COMPONENT COOLING SURGE TANK	
Number	1 (per unit)
Design pressure, psig	
Internal	100
External	10 (vacuum breaker provided)
Design temperature, °F	200
Total volume, gallons	2000
Normal water volume, gallons	1000
COMPONENT COOLING HEAT EXCHANGER	
Number	1 per unit, 1 shared
Design heat transfer Btu/hr	42.1×10^6

	Shell	Tube
Design pressure, psig	150	150
Design temperature, °F	200	200
Design flow rate, lb/hr	3.07×10^6	9.96×10^6
Design inlet temperature, °F	118.7	100
Design outlet temperature, °F	105	104.3
Fluid circulated	Component cooling	Service water

TABLE 9.2-3 (Cont'd)

	Shell	Tube
Material	Carbon steel	90-10 Cu-Ni (or SA-268 Grade 26-3-3 stainless steel for Braidwood only)
COMPONENT COOLING WATER PUMP		
Type	Horizontal	
Number	5 (2 per unit, 1 shared)	
Design pressure, psig	200	
Design temperature, °F	200	
Design flow rate, gallons per minute	4800	
Required net positive suction head (at 4800 gpm), feet	16	
Minimum developed head at design flow, feet	250	
Material	Carbon steel internals and shafts cast iron casings	
COMPONENT COOLING WATER PUMP MOTOR		
Type	Squirrel cage induction	
Rated horsepower	450	
Rated voltage, volts	4000	
Full load, rpm	1778	

TABLE 9.2-4

TYPICAL/NOMINAL SYSTEM FLOW CONDITIONS FOR MAIN PLANT OPERATING PHASES (ONE UNIT)
(Flow rates in gpm)

COMPONENT COOLING LOOP	PLANT STARTUP		NORMAL OPERATION		4 HOURS AFTER REACTOR SHUTDOWN		24 HOURS AFTER REACTOR SHUTDOWN		150 HOURS AFTER REACTOR SHUTDOWN		LOSS OF COOLANT ACCIDENT INJECTION		LOSS OF COOLANT ACCIDENT RECIRC		LOSS-OF-POWER HOT SHUTDOWN		LOSS-OF-POWER COOLDOWN	
	NO.	FLOW	NO.	FLOW	NO.	FLOW	NO.	FLOW	NO.	FLOW	NO.	FLOW	NO.	FLOW	NO.	FLOW	NO.	FLOW
Reactor Coolant Pumps Thermal Barrier (1)	4	160	4	160	4	160	4	160	0	0	4	160	4	160	4	160	4	160
Bearing Cooler Header (1)	4	704	4	704	4	704	4	704	0	0	4	704	4	704	4	704	4	704
Residual Heat Removal Heat Exchanger	0	0	0	0	2	10,000	2	10,000	1	5,000	0	0	2	10,000	0	0	2	10,000
Letdown Heat Exchanger (2)	1	1,000	1	1,000	1	~700	1	~300	1	~300	0	0	0	0	1	~300	1	~500
Excess Letdown Heat Exchanger (3)	2	250	0	0	0	0	0	0	0	0	0	0	0	0	0	0	0	0
Seal Water Heat Exchanger	1	250	1	250	1	250	1	250	1	250	1	250	1	250	1	250	1	250
Sample Cooler Panel	1	17	1	17	1	17	1	17	1	17	1	17	1	17	1	17	1	17
Spent Fuel Pit Heat Exchanger (4)	1	1,200-5,500	1	1,200-5,500	1	1,200-5,500	1	1,200-5,500	1	1,200-5,500	1	1,200-5,500	1	(8)	1	1,200-5,500	1	1,200-5,500
Residual Heat Removal Pump Seal Packages	2	15	2	15	2	15	2	15	2	15	2	15	2	15	2	15	2	15
Charging Pumps Reciprocating (5)	1	90	1	90	1	90	1	90	1	90	1	90	1	90	1	90	1	90
Waste Gas Compressor (5)	2	60	2	60	2	60	2	60	2	60	2	60	2	60	2	60	2	60

TABLE 9.2-4 (Cont'd)

COMPONENT COOLING LOOP	PLANT STARTUP		NORMAL OPERATION		4 HOURS AFTER REACTOR SHUTDOWN		24 HOURS AFTER REACTOR SHUTDOWN		150 HOURS AFTER REACTOR SHUTDOWN		LOSS OF COOLANT ACCIDENT INJECTION		LOSS OF COOLANT ACCIDENT RECIRC		LOSS-OF-POWER HOT SHUTDOWN		LOSS-OF-POWER COOLDOWN	
	NO.	FLOW	NO.	FLOW	NO.	FLOW	NO.	FLOW	NO.	FLOW	NO.	FLOW	NO.	FLOW	NO.	FLOW	NO.	FLOW
Boric Acid Evaporator (5,6)																		
Condenser	1	600	1	600	1	600	1	600	1	600	1	600	1	600	1	600	1	600
Distillate Cooler	1	150	1	150	1	150	1	150	1	150	1	150	1	150	1	150	1	150
Vent Condenser	1	30	1	30	1	30	1	30	1	30	1	30	1	30	1	30	1	30
Containment Penetrations (7)	29	44	29	44	29	44	29	44	29	44	29	44	29	44	29	44	29	44

NOTES:

(1) CC flow to the RCPs is automatically isolated on a Containment Phase B isolation signal.
(2) CC flow to the letdown heat exchanger is dependent upon CV outlet temperature from the heat exchanger.
(3) CC flow to the excess letdown heat exchanger is automatically isolated on a Containment Phase A isolation signal.
(4) CC flow to the spent fuel pit heat exchangers is dependent upon spent fuel pit heat load, and is typically throttled to maintain desired CC discharge header pressure. CC flow to the spent fuel pit heat exchangers assures CC pump minimum flow requirements are satisfied during the injection phase of a LOCA and prior to establishing CC flow to the residual heat removal heat exchangers.
(5) CC flow through these non-essential components may be isolated or aligned to the opposite unit (waste gas compressors), as necessary to support system operation.
(6) Boric Acid Evaporators are not used at Byron and Braidwood Stations, but flow may be maintained through these components for system layup.
(7) CC flow to the containment penetrations is isolated on a Containment Phase B isolation signal.
(8) At Byron, CC flow to the spent fuel pit heat exchanger during the recirculation phase of a LOCA may be aligned to the opposite unit or throttled to maintain the designed CC flow through each residual heat removal heat exchanger while preventing CC pump runout. At Braidwood, CC flow to the Service Loop may be isolated to ensure the required CC flow through each residual heat removal heat exchanger and to prevent CC pump run out during the recirculation phase of a LOCA.

TABLE 9.2-5

COMPONENT COOLING SYSTEM MALFUNCTION ANALYSIS

COMPONENT	MALFUNCTION	COMMENTS AND CONSEQUENCES
Component cooling water pumps	Failure to operate	One of two pumps per unit provide sufficient flow for normal or emergency conditions. The standby pump will auto-start on low discharge header pressure. A common pump could be realigned to affected unit.
Component cooling water heat exchanger	Failure to function	Two of three heat exchangers provide sufficient cooling for normal and emergency conditions for both units. A failed heat exchanger for one of the units can be replaced with the common het exchanger.
Component cooling water surge tank	Failure to function	Center divider prevents loss of both safeguards trains. Suction header cross-tie capability between units allows operability by utilizing the other units surge tank in the event of total loss of a unit's surge tank.
Piping in safeguards loop	Cracked pipe	Second safeguards train is sufficient for safe reactor shutdown.

TABLE 9.2-5 (Cont'd)

COMPONENT	MALFUNCTION	COMMENTS AND CONSEQUENCES
		Component Cooling pump protection is ensured via the Surge Tank low-low level pump trip. Isolation capability is provided in the event of a single failure in the system. Operator action is required to restore the system.
Piping in nonsafeguards loop	Cracked pipe	Surge tank divider and nonsafeguards isolation valve prevent loss of both safeguard loops.
		Component Cooling pump protection is ensured via the Surge Tank low-low level pump trip. Isolation capability is provided in the event of a single failure in the system. Operator action is required to restore the system.

TABLE 9.2-5 (Cont'd)

COMPONENT	MALFUNCTION	COMMENTS AND CONSEQUENCES
Valves in Unit 1 to Unit 2 Common supply and return headers	Valve fail to perform its Unit 1 to Unit 2 separation function (direct flow)	The component cooling system is designed to operate unit-separate or unit-shared. Redundant isolation valves are also available.

TABLE 9.2-5 (Cont'd)

COMPONENT	MALFUNCTION	COMMENTS AND CONSEQUENCES
Passive failure in header between isolation valves	Pipe between Unit 1 and Unit 2 valve ruptures	Regardless of whether the break is in the pump suction header or in the discharge header a low pressure alarm should sound, as well as low component cooling water flow at each reactor coolant pump. The nature of the loads is such that they can be partially supplied for 30 minutes while awaiting operation action, regardless as to whether the unit is in normal operation, start up, or shutdown at the time of the break.
Isolation valves	Valve fails to perform its active function (secure flow)	Valves that fail to secure flow to a leakage loop or branch are backed up by local component isolation valves. Lines penetrating the containment for the RCPs have redundant isolation valves.
Isolation valves	Valve fails to perform its active function (allow flow)	The redundant safeguards loop provides required safeguards cooling.

Table 9.2-6 has been deleted intentionally.

TABLE 9.2-7

PLANT CHILLED WATER SYSTEM EQUIPMENT PARAMETERS

NAME OF EQUIPMENT	NUMBER, TYPE, QUANTITY, AND NOMINAL CAPACITY	
A. CONTAINMENT CHILLED WATER SYSTEM		
Type	Built-up	
Following are the components:		
1. Refrigeration Units	1W001CA 1W001CB	2W001CA 2W001CB
Type of Unit	Water Cooled	Water Cooled
Quantity	2	2
Type of Compressor	Centrifugal	Centrifugal
Cooling Capacity (Btu/hr)	12.54×10^6	12.54×10^6
2. Chilled Water Pumps	1W001PA 1W001PB	2W001PA 2W001PB
Type	Centrifugal	Centrifugal
Quantity	2	2
Flow Rate (gpm)	3000	3000
Total Developed Head (ft of H_2O)	175	175
3. Air Separator	1W004M	2W004M
Quantity	1	1
Capacity (gal)	2750	2750
4. Compression Tank	1W005M	2W005M
Quantity	1	1
Capacity (gal)	163	163

TABLE 9.2-7 (Cont'd)

NAME OF EQUIPMENT	NUMBER, TYPE, QUANTITY, AND NOMINAL CAPACITY	
B. SERVICE BUILDING CHILLED WATER SYSTEM		
Type	Built-up	
Following are the components:		
1. Refrigeration Units	0W002CA	0W002CB
Type of Unit	Water Cooled	
Quantity	2	
Type of Compressor	Centrifugal	
Cooling Capacity (Btu/hr)	6.9×10^6 (w\R-12) 6.84×10^6 (w\R-134a)	
2. Chilled Water Pumps	0W002PA	0W002PB
Type	Centrifugal	
Quantity	2	
Flow Rate (gpm)	1380	
Total Developed Head (ft of H_2O)	170	
3. Air Separator	0W015M	
Quantity	1	
Capacity (gal)	1220	
4. Compression Tank	0W018M	
Quantity	1	
Capacity (gal)	202	
5. Booster Pumps	0W004PA	0W004PB
Type	Centrifugal	
Quantity	2	

TABLE 9.2-7 (Cont'd)

NAME OF EQUIPMENT	NUMBER, TYPE, QUANTITY, AND NOMINAL CAPACITY
Flow Rate (gpm)	620
Total Developed Head (ft of H_2O)	190
C. AUXILIARY BUILDING CHILLED WATER SYSTEM	
Type	Built-up
Following are the Components:	
1. Refrigeration Units	0W003CA, 0W003CB 0W003CC (Braidwood only)
Type of Unit	Water Cooled
Quantity	2 (Byron) 3 (Braidwood)
Type of Compressor	Centrifugal
Cooling Capacity (Btu/hr)	7.2×10^6
2. Chilled Water Pumps	OW003PA, OW003PB OW003PC (Braidwood only)
Type	Centrifugal
Quantity	2 (Byron) 3 (Braidwood)
Flow Rate (gpm)	900
Total Developed Head (ft of H_2O)	110
3. Air Separator	0W016M
Quantity	1
Capacity (gal)	2000
4. Compression Tank	0W019M
Quantity	1
Capacity (gal)	100

TABLE 9.2-7 (Cont'd)

NAME OF EQUIPMENT	NUMBER, TYPE, QUANTITY, AND NOMINAL CAPACITY	
D. CONTROL ROOM CHILLED WATER SYSTEM		
Type	Built-up	
Following are the Components:		
1. Refrigeration Units	0W001CA	0W001CB
Type of Unit	Water Cooled	
Quantity	2	
Type of Compressor	Centrifugal	
Cooling Capacity (Btu/hr)	2.317×10^6	
2. Chilled Water Pumps	0W001PA	0W001PB
Type	Centrifugal	
Quantity	2	
Flow Rate (gpm)	555	
Total Developed Head (ft of H_2O)	130	
3. Air Separator	OW014MA	OW014MB
Quantity	2	
Capacity (gal)	196	
4. Compression Tank	0W020MA	0W020MB
Quantity	2	
Capacity (gal)	625	

TABLE 9.2-8

PLANT CHILLED WATER SYSTEM FAILURE ANALYSIS

COMPONENT	MALFUNCTION	RESULTS
Auxiliary building, containment and service building refrigeration units	Loss of chilled water flow, or compressor trip.	An alarm is annunciated at the local control panel. Warning lights on local control panel indicate the low chilled water flow or trip on internal refrigeration unit safeties.
Control room refrigeration unit	Loss of chilled water flow, or compressor trip.	Refrigeration unit trouble alarm is annunciated on the main control panel. A redundant equipment train is provided.
Auxiliary building, containment and service building chilled water pumps and booster pumps	Loss of chilled water flow or pump motor trip.	Loss of water flow actuates an alarm on the local control panel* and the refrigeration unit trips. Refrigeration unit compressor trouble is annunciated on the local control panel.* (Directly on MCP for containment units.)
Control room chilled water pumps	Loss of chilled water flow or pump motor trip.	Loss of water flow actuates an alarm on main control panel. A redundant equipment train is provided.
Containment isolation valves	Loss of control power.	Valves fail as is. Redundant isolation valve closes on containment isolation signal. Valve closure trips pump.

*Any alarm on the local control panel results in a subsequent local panel trouble alarm in the main control room.

TABLE 9.2-9

STATION HEATING SYSTEM EQUIPMENT PARAMETERS

	NAME OF EQUIPMENT	NUMBER, TYPE, QUANTITY, AND NOMINAL CAPACITY
A.	HOT WATER CIRCULATING PUMPS	1SHO1PA, 2SHO1PA 1SHO1PB, 2SHO1PB
	Type	Centrifugal
	Quantity	4
	Drive	Direct
	Capacity (gpm)	2,205
	Total Developed Head (ft of H_2O)	195
B.	HEATING STEAM HEAT EXCHANGERS	1ASO1A, 2ASO1A
	Type	Horizontal U-tube
	Quantity	2
	Water Flow (gpm)	650
	Steam Condensed (lb/hr)	35,900
	Heat Transfer Load (Btu/hr)	30.0×10^6
C.	HOT WATER EXPANSION TANK	OSHO1T
	Quantity	1
	Capacity (gal)	6,000
D.	AIR SEPARATOR	0SH18M
	Quantity	1
	Capacity (gpm)	4,410
E.	FINNED TUBES	
	Deleted	

TABLE 9.2-9 (Cont'd)

NAME OF EQUIPMENT	NUMBER, TYPE, QUANTITY, AND NOMINAL CAPACITY
F. AUXILIARY BUILDING HEATING COIL BOOSTER PUMP	OSHO8PA, OSHO8PB OSHO8PC, OSHO8PD
Type	Centrifugal
Quantity	4
Drive	Direct
Capacity (gpm)	660
Total Developed Head (ft of H_2O)	120
G. CONTAINMENT PURGE HEATING COIL BOOSTER PUMP	1SH06M, 2SH06M
Type	Centrifugal
Quantity	2
Drive	Direct
Capacity (gpm)	290
Total Developed Head (ft of H_2O)	95
H. TRAIN SHED HEATING COIL BOOSTER PUMP	OSHO5P
Type	Centrifugal
Quantity	1
Drive	Direct
Capacity (gpm)	40
Total Developed Head (ft of H_2O)	110

TABLE 9.2-9 (Cont'd)

NAME OF EQUIPMENT	NUMBER, TYPE, QUANTITY, AND NOMINAL CAPACITY
I. LABORATORY PREHEAT COIL BOOSTER PUMP	OSHO3P
Type	Centrifugal
Quantity	1
Drive	Direct
Capacity (gpm)	90
Total Developed Head (ft of H_2O)	120
J. RADWASTE FACILITY HEATING COIL BOOSTER PUMP	OSHO2P, OSHO9P
Type	Centrifugal
Quantity	2
Drive	Direct
Capacity (gpm)	40
Total Developed Head (ft of H_2O)	120
K. MACHINE SHOP HEATING COIL BOOSTER PUMP	OSHO1P
Type	Centrifugal
Quantity	1
Drive	Direct
Capacity (gpm)	50
Total Developed Head (ft of H_2O)	120

TABLE 9.2-9 (Cont'd)

NAME OF EQUIPMENT	NUMBER, TYPE, QUANTITY, AND NOMINAL CAPACITY
L. LIME SOFTENER BUILDING HEATING COIL BOOSTER PUMP (BRAIDWOOD ONLY)	OSH06P
Type	Centrifugal
Quantity	1
Drive	Direct
Capacity (gpm)	60
Total Developed Head (ft of H_20)	120

THIS PAGE DELETED INTENTIONALLY.

THIS PAGE DELETED INTENTIONALLY.

THIS PAGE DELETED INTENTIONALLY.

THIS PAGE DELETED INTENTIONALLY.

THIS PAGE DELETED INTENTIONALLY.

THIS PAGE DELETED INTENTIONALLY.

THIS PAGE DELETED INTENTIONALLY.

THIS PAGE DELETED INTENTIONALLY.

TABLE 9.2-9 (Cont'd)

NAME OF EQUIPMENT	NUMBER, TYPE, QUANTITY, AND NOMINAL CAPACITY	
V. TYPE 1 UNIT HEATERS		
Byron	0SH16AA-AD	1SH02AP-AZ
	0SHAF-AK*	1SH03AA-AH
	0SH16AT	2SH02AA-AK*
	0SH16AV-AZ	2SH02AN
	0SH17AA-AK*	2SH02AP-AV
	0SH17AT-AX	2SH02AY-AZ
	1SH02AA-AN*	2SH03AA-AK*
Braidwood	0SH16AA-AD	2SH02AP-AV
	0SH1GAL-AM	0SH16AF-AK*
	2SH02AY-AZ	0SH17AL-AN
	0SH16AN	0SH17AP-AS
	0SH16AP-AT	0SH17AT-AW
	1SH02AA-AN*	1SH02AW-AZ
	1SH02AP	2SH02AA-AN*
	2SH03AA	2SH03AJ-AK
	1SH02AS-AV	
Type	Horizontal Discharge	
Quantity	92 (Byron) 75 (Braidwood)	
Following are the components:		
1. Heating Coils		
Type	Hot Water	
Quantity	1	
Capacity (Btu/hr)	24,867	
Water Quantity (gpm)	1.5	

*Excluding equipment number AI

TABLE 9.2-9 (Cont'd)

NAME OF EQUIPMENT	NUMBER, TYPE, QUANTITY, AND NOMINAL CAPACITY
2. Fans	
Type	Propeller
Quantity	1
Drive	Direct
Capacity (scfm)	815
W. TYPE 2 UNIT HEATERS	
Byron	0SH20AA,AD,AE,AF (Abondoned in place) 0SH20AG-AN* 1SH06AA-AN* 1SH06AP-AQ 2SH06AA-AN* 2SH06AP
Braidwood	0SH20AC 0SH20AD (Abondoned in place) 0SH20AP-AT 1SH06AC-AF 1SH06AQ 2SH06AA-AF
Type	Horizontal Discharge
Quantity	40 (Byron) 18 (Braidwood)

*Excluding equipment number AI

TABLE 9.2-9 (Cont'd)

NAME OF EQUIPMENT	NUMBER, TYPE, QUANTITY, AND NOMINAL CAPACITY
Following are the components:	
1. Heating Coils	
Type	Hot Water
Quantity	1
Capacity (Btu/hr)	36,998
Water Quantity (gpm)	2
2. Fans	
Type	Propeller
Quantity	1
Drive	Direct
Capacity (scfm)	1,004
X. TYPE 3 UNIT HEATERS	
Byron	0SH23AA-AN* 1SH09AA 0SH23AP-AV 1SH09AD-AE 0SH24AC 2SH09AA-AE
Braidwood	0SH23AC-AD 1SH09AA 0SH23AJ-AN 2SH09AA-AC 0SH23AR-AZ 0SH24AA-AC
Type	Horizontal Discharge
Quantity	29 (Byron) 23 (Braidwood)
Following are the components:	
1. Heating Coils	
Type	Hot Water
Quantity	1
Capacity (Btu/hr)	55,033
Water Quantity (gpm)	3

*Excluding equipment number AI

TABLE 9.2-9 (Cont'd)

NAME OF EQUIPMENT	NUMBER, TYPE, QUANTITY, AND NOMINAL CAPACITY
2. Fans	
Type	Propeller
Quantity	1
Drive	Direct
Capacity (scfm)	1,162

TABLE 9.2-9 (Cont'd)

NAME OF EQUIPMENT	NUMBER, TYPE, QUANTITY, AND NOMINAL CAPACITY
Y. TYPE 4 UNIT HEATERS	
Byron	0SH27AA-AC 1SH11AA-AD 2SH11AA-AD
Braidwood	0SH27AA-AC 1SH11AB 2SH11AA-AB
Type	Horizontal Discharge
Quantity	11 (Byron) 6 (Braidwood)
Following are the components:	
1. Heating Coils	
Type	Hot Water
Quantity	1
Capacity (Btu/hr)	77,320
Water Quantity (gpm)	4
2. Fans	
Type	Propeller
Quantity	1
Drive	Direct
Capacity (scfm)	1,661

TABLE 9.2-9 (Cont'd)

NAME OF EQUIPMENT	NUMBER, TYPE, QUANTITY, AND NOMINAL CAPACITY	
Z. TYPE 5 UNIT HEATERS		
Byron	0SH28A 1SH13AA-AH	2SH13AA-AH 2SH13AJ-AM
Braidwood	0SH28A 0SH29AB-AD 2SH13AQ	0SH35A 2SH13AJ-AN
Type	Horizontal Discharge	
Quantity	21 (Byron) 11 (Braidwood)	

Following are the components:

1. Heating Coils

TABLE 9.2-9 (Cont'd)

NAME OF EQUIPMENT	NUMBER, TYPE, QUANTITY, AND NOMINAL CAPACITY
Type	Hot Water
Quantity	1
Capacity (Btu/hr)	107,820
Water Quantity (gpm)	6
2. Fans	
Type	Propeller
Quantity	1
Drive	Direct
Capacity (scfm)	2,267
AA. TYPE 6 UNIT HEATERS	
Byron	0SH29AA-AD 1SH16AA-AB 1SH15AA-AN* 2SH15AA-AN* 1SH15AP-AZ 2SH15AP-AZ
Braidwood	1SH15AB-AD 1SH16AA-AB 1SH15AG-AN* 2SH15AA-AD 1SH15AP 2SH15AG-AN* 1SH15AS-AZ 2SH15AP-AZ
Type	Horizontal Discharge
Quantity	54 (Byron) 43 (Braidwood)
Following are the components:	
1. Heating Coils	
Type	Hot Water
Quantity	1
Capacity (Btu/hr)	171,500
Water Quantity (gpm)	10

*Excluding equipment number AI.

TABLE 9.2-9 (Cont'd)

NAME OF EQUIPMENT	NUMBER, TYPE, QUANTITY, AND NOMINAL CAPACITY
2. Fans	
Type	Propeller
Quantity	1
Drive	Direct
Capacity (scfm)	3,933
AB. TYPE 7 UNIT HEATERS	
Byron	0SH31AA-AD 0SH31AE-AF 1SH18AA-AB 2SH18AA-AB
Braidwood	0SH31AA 1SH31AB-AD (abondoned in place) 0SH31AE-AF 1SH18AA-AB 2SH18AA-AB 0SH31AB-AD
Type	Vertical Discharge
Quantity	10 (Byron) 13 (Braidwood)

TABLE 9.2-9 (Cont'd)

Following are the components:

1. Heating Coils

Type	Hot Water
Quantity	1
Capacity (Btu/hr)	600,000
Water Quantity (gpm)	40

2. Fans

Type	Propeller
Quantity	1
Drive	Belt
Capacity (scfm)	13,000

THIS PAGE DELETED INTENTIONALLY.

TABLE 9.2-10

STATION HEATING SYSTEM FAILURE ANALYSIS

COMPONENT	MALFUNCTION	RESULTS
Hot water circulating pumps and booster pumps	Pump motor trip	Pump motor trip is annunciated on the local control panel.
Heating coils with 3-way valve	Loss of instrument signal to control	Heating coil goes to full heat.

*Any alarm on the local control panel results in a subsequent local panel trouble alarm in the main control room.

TABLE 9.2-11

ESSENTIAL SERVICE WATER
COMPONENT NOMINAL DESIGN FLOW RATES

Component	Equipment No.	Nominal Flow (gpm)
CC Heat Exchangers	0/1/2CC01A	8,000 (Note 1)
SX Pump Lube Oil Coolers	1/2SX01AA,B	10
SX Pump Cubicle Coolers	1/2VA01SA,B	105
AF Pump (Motor Driven) Lube Oil Coolers	1/2AF01AA	14
AF Pumps (Diesel Driven)		
Closed Cycle HX	1/2SX01K	250
Lube Oil Coolers	1/2AF01AB	14
Gear Oil Coolers	1/2AF02A	20
Right Angle Gear Lube Oil Coolers	1/2SX02K	20
Cubicle Coolers	1/2VA08S	150
CV Pump Lube Oil Coolers	1/2CV03SA,B	15 (Note 6)
CV Pump Gear Oil Coolers	1/2CV02SA,B	25 (Note 6)
CV Pump Cubicle Coolers	1/2VA06SA,B	60
D/G Jacket Water Coolers	1/2DG01KA,B -X1,X2	1650
Spent Fuel Pit Pump Cubicle Coolers (Note 2)	1/2VA07S	45
SI Pump Bearing Oil Coolers	1/2SI01SA,B	33
SI Pump Cubicle Coolers	1/2VA04SA,B	45
CS Pump Cubicle Coolers	1/2VA03SA,B	70
Positive Displacement Pump Cubicle Coolers (Note 3)	1/2VA05S	25
Control Room Refrigeration Units	0WO01CA,B	950 (Note 4)
RHR Pump Cubicle Coolers	1/2VA02SA,B	45
RCFC SX Water Coils	1/2VP01AA-D	2660
Primary Containment Refrigeration Units	1/2WO01CA,B	4160 (Note 5)

TABLE 9.2-11 (Cont'd)

NOTES

1. At Byron, SX flow to the CC heat exchanger is manually throttled between 5,400 to 20,000 gpm. At Braidwood, SX flow to the CC heat exchangers is manually throttled due to seasonal temperature variances.
2. The spent fuel pit pump cubicle coolers are served by SX train B.
3. The positive displacement pump cubicle cooler is served by SX train A.
4. Control room refrigeration unit flow varies automatically in response to condenser load. The control room refrigeration units are served by the Unit 1 SX system.
5. The primary containment refrigeration units are in series with the RCFC SX water coils. Flow varies automatically in response to condenser load.
6. An alternate cooling source is available to the centrifugal charging pumps by use of temporary hoses from the Fire Protection System (not credited in any design basis accident).

Tables 9.2-12 and 9.2-13 have been deleted intentionally.

TABLE 9.2-14

SUSPENDED SEDIMENT CONCENTRATIONS

DATE	SECTION	LOCATION	DISTANCE FROM LEFT BANK (ft)	CONCEN-TRATION (PPM)	DISCHARGE (cfs)
7-29-80	3	Centerline of Intake	173	73.4	3219
			185	65.8	
			200	72.6	
7-31-80	2	464 ft upstream of Section 1	155	55.3	2800
			181	56.7	
7-31-80	4	457 ft downstream of Section 1	88	166.3	2500
			107	79.8	
			150	40.9	
10-7-80	1	947 ft upstream of Section 3	131	76.5	8245
			157	71.4	
			186	67.2	

TABLE 9.2-15

MONTHLY FLOWS AT INTAKE

MONTH	LOWEST MEAN FLOW (cfs)	AVERAGE MEAN FLOW (cfs)
January	977	4100
February	1263	5704
March	1855	9227
April	2660	8170
May	1390	5399
June	1162	4648
July	826	3557
August	812	2851
September	932	2604
October	1129	3193
November	1314	3525
December	1317	3475

TABLE 9.2-16

SINGLE FAILURE ANALYSIS OF THE ULTIMATE HEAT SINK

COMPONENT	FAILURE	COMMENTS AND CONSEQUENCES
Containment spray pump (accident unit)	Failure to operate	A minimum of six cells will remain available to limit tower basin temperature below 100°F.
Essential service water tower fan	Failure to start	A minimum of five cells will remain available to limit tower basin temperature below 100°F.
Emergency diesel generator	Failure to start	Diesel generator failure results in a reduced rate of heat input to the ultimate heat sink. A minimum of four cells will remain available to limit tower basin temperature below 100°F.
Essential service water pump(accident unit)	Failure to operate	A minimum of six cells will remain available to limit tower basin temperature below 100°F.
4160 Volt bus	Failure to energize	Two SXCT fans and two RCFCs are powered from the same 4160 volt bus. A 4160 volt bus failure results in a reduced rate of heat input to the ultimate heat sink. A minimum of four cells will remain available to limit tower basin temperature below 100°F.

TABLE 9.2-16 (Cont'd)

SINGLE FAILURE ANALYSIS OF THE ULTIMATE HEAT SINK

COMPONENT	FAILURE	COMMENTS AND CONSEQUENCES
4160 Volt or 480 Volt feed breaker for the SXCT fans	Spurious failure/opening	Two SXCT fans and associated riser valves are powered from the same 4160 volt or 480 volt bus. A minimum of four cells will remain available to limit tower basin temperatures below 100°F. Operator action to reduce accident and non-accident heat input to the UHS may need to be taken if high wet bulb temperatures exist.

TABLE 9.2-16 (Cont'd)

Essential service water makeup pump (0SX02PA, 0SX02PB)	Failure to operate	Failure of one makeup pump may disable one train of the SX makeup system. This would result in loss of makeup flow for one cooling tower basin. The redundant train of makeup would remain available to supply makeup water to the second cooling tower basin. The tower basins are interconnected by a spillover between the basins at the 64% basin level. With the spillover connection, the supply from one operable essential service water makeup pump can provide adequate flow for both cooling tower basins. Two alternate Category II sources of makeup water are also available from the seismically qualified deep wells and the circulating water makeup system, but no credit is taken for them here.

TABLE 9.2-16 (Cont'd)

Essential service water makeup pump discharge check valve (0SX028A/B)	Failure to operate	Failure of one pump discharge check valve may disable one train of the SX makeup system. This would result in loss of makeup flow for one cooling tower basin. The redundant train of makeup would remain available to supply makeup water to the second cooling tower basin. The tower basins are interconnected by a spillover between the basins at the 64% basin level. With the spillover connection, the supply from one operable essential service water makeup pump can provide adequate flow for both cooling tower basins. Two alternate Category II sources of makeup water are also available from the seismically qualified deep wells and the circulating water makeup system, but no credit is taken for them here.
Essential service water makeup pump discharge check valve (0SX284A/B)	Failure to operate	Failure of one pump discharge check valve to open may disable one train of the SX makeup system. This would result in loss of makeup flow for one cooling tower basin. The redundant train of makeup would remain available to supply makeup water to the second cooling tower basin. The tower basins are interconnected by a spillover between the basins at 64% basin level. With the spillover connection, the supply from one operable essential

TABLE 9.2-16 (Cont'd)

	service water makeup pump can provide adequate flow for both cooling tower basins. Two alternate Category II sources of makeup water are available from the seismically qualified deep wells and the circulating water makeup system, but no credit is taken for them here.
	Failure of one pump discharge check valve to close, concurrent with a tornado event at the River Screen House may result in loss of basin inventory. Analysis demonstrates basin level and deep well pump makeup will be sufficient to support UHS function.

TABLE 9.2-16 (Cont'd)

Circulating water makeup system check valve (0SX143A/B)	Failure to operate	These valves isolate the Category II circulating water makeup system piping from the Category I essential service water system makeup piping. Failure of one check valve may disable one train of makeup. A redundant train of makeup piping and components remains available. The 0SX284A,B check valves will provide a redundant, safety grade, tornado protected, barrier to prevent back leakage from the UHS basin in the event of a failure of 0SX143A,B to close during any event where the non-safety related circulating water piping can fail.
Essential service water cooling tower hot water bypass valves (0SX162A-D)	Failure to operate	These valves automatically open to direct warm return water to the basin during cold weather to maintain a predetermined basin water temperature. Failure of one valve to open would affect one bypass line; the other bypass lines remain available. These valves automatically close to maintain the basin water temperature below a predetermined maximum temperature during normal operation. Following a postulated LOCA, the bypass valves would be closed via operator action. In the event one valve fails to close, the remaining available cooling tower riser flow provides adequate cooling of essential service water.

TABLE 9.2-16 (Cont'd)

Essential service water cooling tower riser valves (0SX163A-H)	Failure to operate	The ultimate heat sink post-LOCA transient temperature analysis conservatively assumes that one or two cooling tower riser valves are closed and out of service. In the event that one additional riser valve fails to open, the remaining available cooling tower cells provide adequate cooling of essential service water.
Essential service water blowdown isolation valve (0SX161A/B)	Failure to close	Failure of a blowdown isolation valve to close results in an additional inventory loss of 300 gpm. The operating SX makeup pumps or deep well pumps provide adequate makeup flow.
Essential service water strainer backwash isolation valve (1/2SX150A/B)	Failure to close	SX inventory will be lost until operator action is taken to manually isolate backwash. The operating SX makeup pumps or deep well pumps provide adequate makeup flow.

Note: All single failure analysis cases conservatively assume one or two cells initially out of service in addition to the subject single failure.

9.3 PROCESS AUXILIARIES

9.3.1 Compressed Air Systems

9.3.1.1 Design Bases

Two compressed air systems are employed for the station, the service air system and the instrument air system. The service air system provides oil-free compressed air for general plant use and maintenance use. The instrument air system provides dry, oil-free compressed air for both nonessential and essential components and instruments. Both systems are designated Safety Category II, Quality Group D with the exception of containment penetrations, inasmuch as there are no safety-related systems that require compressed air to perform their safety-related functions under postaccident or emergency cooldown conditions.

The instrument air system is supplied with service air which is dried to a dew-point of -40°F or less. Oil and dust are removed by a prefilter and an afterfilter fitted to the air dryer. The prefilter removes 100% of the particles 0.6 microns and larger and 98% of the particles 0.04 microns and larger. The afterfilter removes 100% of the particles 0.9 microns and larger and 98% of the particles 0.07 microns and larger.

The air quality monitoring program implemented by Exelon Generation Company uses the ANSI/ISA-S7.3-1975 Standard as a guideline. Air quality sampling is conducted on a periodic basis. Hydrocarbon (oil) measurements follow ANSI/ISA-S7.3 guidelines for quality acceptance. For dewpoint measurements, an acceptance criterion has been established at <-25°F. Based upon plant configurations, Instrument Air lines are not exposed to temperatures below 32°F (Instrument Air lines to out buildings are buried below frost line). To meet the ANSI/ISA-S7.3 requirements (18°F below lowest temperature that system is exposed during the year), dewpoints must be maintained lower than 14°F. The Byron/Braidwood acceptance criterion satisfies this requirement. For particulate measurements, ANSI/ISA-S7.3 does not provide a sampling method or particle concentration limit that can be tested. Therefore, this monitoring program samples for particles in various size ranges and, from these data, establishes a particulate acceptance criteria.

9.3.1.2 System Description

At Braidwood, service air and instrument air for both units are supplied by three motor driven centrifugal air compressors located in the turbine building. Each compressor has a design capacity of 2190 scfm at 115 psig, which will meet the air requirements for plant operations with the other two compressors in standby. The air intake to each compressor is taken from indoors and is filtered. The compressed air is intercooled between stages, utilizing non-essential service water in heat exchangers. The discharge of each compressor passes through a non-essential service water cooled aftercooler and moisture separator before entering the receivers, each of which has provisions for draining moisture. There is a station air receiver for each compressor.

At Byron, service air and instrument air for both units are supplied by four motor driven rotary screw air compressors located in the turbine building. Each of the rotary screw compressors can supply air requirements of 1500 scfm at 115 psig and two compressors are required to supply air demand for plant operation. The air intake to all the rotary screw air compressors is taken from indoors and is filtered. The compressed air from the rotary screw compressors is intercooled between stages, utilizing ambient air. The discharge of these compressors passes through an ambient air cooled aftercooler and moisture separator before entering the receivers, each of which has provisions for draining moisture. There is a station air receiver for each of the Unit 1 rotary screw compressors while the two Unit 2 rotary screw compressors share an air receiver. The cooling air is exhausted outside the turbine building via duct work and louvers.

Each station air receiver has two discharge connections, one to the service air system and the second to the instrument air system. The three discharges to the instrument air system are cross-tied to a header which feeds three instrument air dryer

units located in the turbine building. Each air dryer unit consists of a prefilter-dryer-afterfilter train. The three air dryer discharges are cross-tied to a header which supplies instrument air to three instrument air receivers located in the turbine building. The air receivers supply instrument air to the turbine building, auxiliary building, fuel handling building, and containment buildings. Additional instrument air receivers are located throughout the station to provide additional surge capacity in areas of heavy air usage.

Each air dryer is of the twin tower, dry desiccant type which uses activated alumina as the adsorption material. While one tower is in service, the other is being regenerated. The tower in service receives up to 1755 scfm of air saturated at 115 psig and 120°F, and discharges the air at a dew-point temperature of -40°F. At Byron, dry air from the discharge of the inservice tower is backflowed as required through the other tower, which gives up its moisture to the dry air purge flow. At Braidwood, dry air from the discharge of the inservice tower is backflowed at the rate of 232 scfm through the other tower, which gives up its moisture to the dry air purge flow. The tower is automatically removed from service when exhausted, and the other tower being regenerated is then aligned to receive incoming moist air from the receivers. At Byron, the dryer is equipped with an automatic inlet, outlet, and bypass valve, which would isolate and bypass the dryer in the event of low discharge pressure.

At Braidwood, the dryer is equipped with an automatic bypass valve which would bypass the dryer in the event of low discharge pressure.

The three discharges from the station air receivers are crosstied into the turbine building service air header which supplies service air to general plant and maintenance users throughout the turbine building. This header also supplies service air to the auxiliary building, fuel handling building, and containment building.

The river screen house at Byron is provided with two air compressors that supply both instrument air and service air. The river screen house at Braidwood is provided with an air compressor that supplies both instrument air and service air. The instrument air at the screen house is also dried through an air dryer. The river screen house instrument air system supplies air to instruments and components. The service air system supplies air for general maintenance use. The instrument air and service air systems at the river screen house are Category II, Quality Group D.

Diagrams of the service air and instrument air systems are provided in Drawings M-54 and M-55.

9.3.1.3 Safety Evaluation

The service air and instrument air systems are both designated as Safety Category II, Quality Group D systems. A portion of the piping and the associated isolation valves used for containment penetrations are designated as Safety Category I, Quality Group B. Failure of the service air and instrument air systems will not prevent safety-related components or systems from mitigating the consequences of any design-basis accident or performing as intended under emergency cooldown conditions. The containment isolation valves for the compressed air systems have been tested to ensure they fail to their designed safe position on loss of air to the valve operator.

Non-safety-related instrument air is provided to the air-operated control valves in the containment spray system that supply borated water for the motive force to the eductors that deliver sodium hydroxide solution into the system. On loss of instrument air to the valve operator, the valves fail open to ensure that sodium hydroxide will continue to be introduced into the system as required. The flow through these valves has been tested to verify that the minimum required flow rate of sodium hydroxide is maintained through the eductors when the valves are full open, ensuring that the proper pH values for the containment spray are maintained even with loss of instrument air to the valve operator.

On Byron Units 1 and 2 and Braidwood Unit 2, non-safety-related instrument air is also provided to the auxiliary feedwater flow control valves. On Braidwood Unit 1, non-safety -related instrument air is also provided to the auxiliary feedwater flow control valve accumulators. On a loss of the instrument air system, the air stored in these safety related tanks can provide AF005 valve isolation and control from the Main Control Room for approximately 30 minutes. On loss of instrument air to the valve operator, these valves fail open. Each of the auxiliary feedwater supply lines has sufficient flow restriction to limit the flow such that the minimum required flow for auxiliary feedwater design basis accident mitigation is delivered to each of the steam generators. Also, the auxiliary feedwater flow control valves have been tested to ensure they fail to their designed safe position on loss of air to the valve operator.

A safe plant shutdown is achieved by attaining a hot shutdown condition, which does not require that the power-operated main steam relief valves be operable. However, the main steam generator atmospheric relief valves have been modified to allow operation during loss of offsite power.

The main steam relief valves are hydraulically operated valves which do not utilize compressed air systems for operation. Class 1E qualified solenoid-actuated hydraulic operators are installed on these valves. The operators are powered from emergency power buses. The valve operators and control circuit for loops A and D are powered by Division 11 emergency power and Loops B and C are powered by Division 12 emergency power (Division 21 and 22 for Unit 2). Upon loss of power, the valves will fail closed.

As the rest of the air-operated safety-related valves are provided with non-safety-related instrument air, they will fail in their safe position on loss of instrument air to the valve operator.

9.3.1.4 Tests and Inspections

Component demonstration tests are performed on this system. The equipment manufacturer's recommendations and station practices are considered in determining required maintenance.

9.3.1.5 Instrumentation Applications

The compressed air systems are instrumented to automatically maintain the proper system pressure and to present annunciation in the main control room whenever system pressure drops below setpoint limits. Control switches are also provided on the main control board which allow the operator to remotely start

and stop the air compressors in response to changes in demand for compressed air or for other reasons such as maintenance. At Byron, the control switches and cables are not provided on the main control board for the remote start of the first air-cooled, rotary screw compressor 2SA10CA. The rotary screw type compressors have the capability to automatically start to maintain service air and instrument air system pressure and to provide annunciation in the main control room on equipment warnings. The remaining air cooled, rotary screw compressors 1SA10CA, 1SA10CB and 2SA10CB can be started or stopped from the main control room or the compressor control panel.

9.3.2 Sampling Systems

The sampling system provides a means for obtaining fluid and gas samples for laboratory analysis of the chemical and radiochemical conditions of the designated reactor fluid systems. The systems are designed to permit taking samples during all normal reactor operations. The refueling water storage tank is sampled in accordance with the Technical Specifications. The boric acid mixing tank and containment floor drain sump have provisions to obtain samples on demand. Due to its mode of operation, it is not required to sample the chemical additive tank. The spray additive tank is sampled in accordance with the Technical Specifications.

9.3.2.1 Primary Sampling System

9.3.2.1.1 Design Bases

The primary sampling system is designed for manual operation on an intermittent basis, under conditions ranging from full-power operation to cold shutdown. To reduce the quantity of purge fluid needed to obtain representative samples, pipe internal diameters are kept to a minimum consistent with the requirement that the lines should not clog with solids.

Sample system equipment is located outside the reactor containment to facilitate maintenance on the sample stream mechanical components and instrumentation. The primary sampling system is designated in Table 3.2-1.

9.3.2.1.1.1 Contamination and Radiation Protection

The primary sampling system discharge flows are limited under normal and anticipated fault conditions (malfunctions or failure) to preclude any fission product release beyond the plant release limitation given in the Radioactive Effluent Controls Program. Adequate safety features are provided to protect personnel and to prevent the spread of contamination from the sampling room. The reactor coolant loop samples pass through a delay coil inside the containment; sufficient delay is provided to limit the dose rate outside the containment due to short-lived isotopes (e.g., N-16).

9.3.2.1.2 System Description

The primary sampling system provides the representative samples for laboratory analysis. Analysis results provide guidance in the operation of the reactor coolant, residual heat removal, chemical and volume control, and emergency core cooling systems. Analyses show both chemical and radiochemical conditions. Typical information

obtained includes reactor coolant boron and chloride concentrations, fission product radioactivity level, hydrogen, oxygen, and fission gas content, conductivity, pH, corrosion product concentration, and chemical additive concentration. The information is used in regulating boron concentration, evaluating fuel element integrity and demineralizer performance, and regulating additions of corrosion-controlling chemicals to the systems.

The HRSS liquid sample panels have the capability of sampling the following: (Various radwaste demineralizer sample points have been plumbed into the panel as a backup for local grab samples and do not necessarily serve a routine function.)

a. pressurizer steam space,

b. pressurizer liquid,

c. reactor coolant hot leg loops 1 and 3,

d. reactor coolant cold leg loops 1 through 4,

e. RHR heat exchanger A and B outlets,

f. each SI accumulator (emergency core cooling system),

g. CVCS demineralizer outlet,

h. BTRS demineralizer outlet,

i. reactor coolant filter outlet,

j. reactor coolant letdown heat exchanger outlet,

k. containment floor drain sump,

l. steam generator blowdown,

m. HRSS waste drain tank, and

n. chemical drain tank.

Local sample connections are provided at various locations throughout the plant. These connections are shown on the respective flow diagrams and are not considered part of the sampling system.

Samples originating from locations within the containment flow through lines to the sampling room in the auxiliary building. Each line is equipped with: (1) a manual isolation valve close to the source; (2) a remote air-operated valve immediately downstream of the isolation valve; (3) containment boundary

isolation/trip valves located inside and outside the containment, and manual valves located inside the sampling room or component isolation, sample flow control, and routing. High-temperature sample lines also contain a sample heat exchanger.

In addition, the high-pressure reactor coolant loop sample line contains a delay coil which has sufficient length to provide at least a 45-second sample transit time within the containment. Additional transit time from the reactor containment to the sampling room is provided by the sampling line. This allows for decay of the short-lived isotope, N-16, to a level that permits normal access to the sampling room.

The sample room has controlled ventilation and drainage, to control radioactivity release.

All sample lines originating from locations outside the containment are provided with manual isolation valves and remote air-operated sampling isolation valves.

9.3.2.1.2.1 Component Description

Component codes and classifications for the sampling system components are given in Section 3.2; component design parameters are listed in Table 9.3-1.

Liquid Sample Cooler Rack

The sample heat exchangers are of the shell-and-coil-tube type. Sample flow circulates through the tube side, while component cooling water circulates through the shell. The

inlet and outlet tube sides have socket-welded joints for connections to the high-pressure sample lines.

Liquid Sample Panel

The liquid sample panel contains three modules: the reactor coolant sampling module, the demineralizer sampling module, and the radwaste sampling module. Samples are obtained during normal operating and contingency conditions. Contingency plans for obtaining and analyzing highly radioactive samples from the reactor coolant system, containment sump, and containment atmosphere are maintained within plant procedures.

The following maximum flow rates apply to the liquid sample panel modules listed:

Module	Normal Operation/ Contingency Purge Flow Rate	Normal Operation Sample Flow Rate	Contingency Sample Flow Rate
Reactor Coolant	1900 cc/min	1900 cc/min	200 cc/min
Demineralizer	1900 cc/min	1900 cc/min	200 cc/min
Radwaste	1900 cc/min	1900 cc/min	200 cc/min

Purge flow rates for all modules of at least 2-3 times the sample rate can be attained for all modules of the high radiation sample system.

Purge times and flow rates are calculated based on the installed sample piping lengths to achieve sufficient volume changes to ensure a representative sample is obtained.

Purge paths are provided for the sample lines and panels. Purge flow can be directed back to the sample source or to the waste drain tank.

An HRSS liquid sample panel is installed for each unit. Each is designed to obtain from its respective unit:

a. cooled, depressurized grab samples for routine reactor coolant analysis and

b. cooled, pressurized grab samples for routine reactor coolant analysis.

All sample lines and valving are located behind the panel shield. Ventilation of the back side of the shield maintains a negative pressure. All sampling operations are completed on the shielded side of the panel. Grab sample splash boxes are located in the panel for normal sampling. A cart/cask is provided for taking diluted and undiluted reactor coolant and radwaste samples.

Delay Coil

The high-pressure reactor coolant loop sample line contains a delay coil, consisting of coiled tubing, which has sufficient length to provide at least a 45-second sample transit time within the containment.

Piping

All liquid and gas sample lines are austenitic stainless steel tubing and are designed for high-pressure service. Lines are

so located as to be protected from accidental damage during routine operation and maintenance.

Valves

Stop valves in the containment are remotely operated from the sampling room. They are used to isolate all sample points and to route sample fluid flow. Isolation valves used in high radiation areas are remotely operated so that the operator does not have to enter a possibly high radiation area for operation.

Stop valves are provided for sample point isolation and flow path control at all sampling system locations which are normally accessible. All manually operated valves used for radioactive service have backseats to allow repacking under pressure. A check valve in the residual heat removal sample line prevents accidental overpressurization of the residual heat removal system by preventing flow from the reactor coolant system, should both the air-operated sample valves be open.

Two qualified solenoid air-operated valves are provided, one inside and one outside the containment, on all sample lines leaving the containment. The valves close upon actuation of the containment isolation signal. Also, the valves fail closed on loss of power or instrument air to the valve operator and are remotely controlled from the main control room.

All valves in the system are constructed of austenitic stainless steel or equivalent corrosion-resistant material.

9.3.2.1.2.2 System Operation

Liquid samples are obtained by opening the remotely-operated isolation valve of the selected sample line. The sample heat exchangers cool those samples requiring temperature reduction. Pressures are reduced in the liquid sample panel and sample stream flow is established through the liquid sample panel until sufficient volume is purged to ensure that a representative sample will be obtained. When the purge is complete, flow is diverted to a suitable sample container. Subsequent to a sampling operation, the panel and sample lines are flushed as required.

Routine reactor coolant samples are analyzed in the station's hot laboratory, located on the 426-foot elevation of the auxiliary building. Cooled, pressurized, and depressurized grab samples are obtained at the liquid sample panel and transported to the laboratory via the auxiliary building dumbwaiter.

9.3.2.1.3 Safety Evaluation

9.3.2.1.3.1 Availability and Reliability

In the event of a loss-of-coolant accident, the system is isolated at the containment boundary.

9.3.2.1.3.2 Leakage Provisions

The sample panels are ventilated to the auxiliary building exhaust ventilation system (filtered vent system). Liquid leakage in the sample panel is collected in the panel and drained to the waste drain tank. If there is any leakage from the sampling system inside the containment (e.g., valve stem leakage), it is collected in the containment sump.

9.3.2.1.3.3 Exposure Control

The sampling room is ventilated to reduce the potential for airborne radioactivity exposure of operating personnel.

Sufficient length is provided in the reactor coolant sample line to reduce personnel exposure from short-lived radionuclides. Shielding is provided as necessary to reduce personnel exposures. The operating procedures will specify the precautions to be observed when purging and drawing samples.

9.3.2.1.3.4 Incident Control

The sampling system is designed to be operated on an intermittent basis under administrative control. The system is normally closed with no flow.

Sample lines penetrating the containment are equipped with remotely operated isolation valves which close on receipt of a containment isolation signal. In addition, the isolation valve in the chemical and volume control system letdown line outside the containment will close on receipt of the containment isolation signal, isolating the letdown line sample lines from the containment.

9.3.2.1.4 Tests and Inspections

The sampling system is normally in use daily. The equipment manufacturer's recommendations and station practices are considered in determining required maintenance. A preoperational test is performed on the system.

9.3.2.2 Secondary Sampling Systems

9.3.2.2.1 Design Bases

The secondary sampling systems extract and analyze samples from the secondary cycle and plant auxiliary systems. The secondary

sampling systems are those covered in the following material. The sampling systems are designed to permit liquid sampling of the secondary systems to determine chemical concentrations. Sampling facilities provide a means to obtain grab samples for laboratory analysis for all sample points. Certain sample points have continuous analyzers. Sampling systems are described in Section 11.5. Radiation sources for which sampling and/or monitoring systems are provided are listed in Section 12.1.

Adequate safety features are provided to protect laboratory personnel and to prevent the spread of contamination from the sampling room when samples are being drawn. Access to the containment is not required. Potentially radioactive sample discharge systems are designed to preclude any effluent releases in excess of 10 CFR 20 limits. These samples are held to a sufficiently low temperature to permit safe handling and to minimize the generation of radioactive aerosols.

Sampling systems are designed to assure representative sampling of the process streams. Parameters are regulated within limits required to maintain accuracy of analyses in accordance with plant requirements.

Sample system equipment and piping upstream from and including pressure and temperature regulating stations are designed for the maximum pressure and temperature of the sampled process systems. Sample systems are designed in accordance with Safety Category II, Quality Group D requirements.

The system has no emergency function, nor is it required to take action to prevent an emergency condition.

9.3.2.2.2 System Description

The secondary sampling system is divided into potentially radioactive and nonradioactive subsystems. Each subsystem is described separately.

Potentially Radioactive Secondary Subsystem

The potentially radioactive subsystem consists of a sample sink, instrument panels, and radiation monitor located in the high level laboratory of the auxiliary building. A continuous sample is drawn from each steam generator blowdown line at a point outside the containment. The sample from each steam generator is routed through automatic chemical and radiological monitoring systems. Upon a high radiation alarm from one of the analyzers, an isotopic analysis is performed for each steam generator of the affected unit to determine which steam generator is leaking. Steam generator blowdown process and sample containment isolation

valves are automatically closed on a Phase A containment isolation signal.

All wetted parts in contact with potentially radioactive sample fluid are constructed of stainless steel. The sample sink, located in the sampling hood, contains a drain line that is routed to the Steam Generator Blowdown Condenser Hot Well Tank, (1SD01T). At Byron, the sample is normally routed to the Unit 1 Steam Generator Blowdown Condenser Hot Well Tank (1SD01T), however provisions exist such that the sample may be routed via hose to the Unit 2 Steam Generator Blowdown Condenser Hot Well Tank (2SD01T), or directly to the Auxiliary Building Floor Drains. These activities are controlled by station procedures. The work area around the sink and the enclosure is large enough to provide space for portable radiation monitoring equipment in addition to the space needed for sample collection and storage.

Nonradioactive Secondary Subsystem

The nonradioactive subsystem consists of a sample sink and instrument panel located in the secondary sample room of the turbine building. The panel and sink house all sampling and analysis equipment for the following samples:

a. condensate makeup pump discharge,

b. condensers,

c. condensate pump discharge,

d. condensate booster pump discharge,

e. feedwater pump discharge,

f. main steam,

g. drain cooler outlets,

h. heater drain pump discharge,

i. auxiliary boiler feedwater,

j. auxiliary boiler blowdown, and

k. essential service water. (Byron Only)

The design of the nonradioactive subsystem is similar to the potentially radioactive subsystem described previously except that secondary sample room radiation is not monitored and a closed sampling hood is not provided since the samples do not normally contain significant quantities of radioactivity.

Design Features Common to Potentially Radioactive and Nonradioactive Subsystems

Local instrumentation is provided to permit manual control of sampling operations and to assure that the samples are at suitable temperatures and pressures before diverting flow to the sample sink. All purging flow rates are displayed by flow indicators. The sink contains valves, pressure regulators, pressure indicators, sample coolers, and miscellaneous "wet" equipment.

A temperature-controlled sample cooling system is provided where required by the continuous analyzers to eliminate temperature effect errors. The panels are ventilated to minimize ambient temperature effects on samples and electronics.

All sample lines are stainless-steel tubing. Sinks and work areas are of stainless steel. Joints for all potentially radioactive systems are socket-welded. Sample lines are routed so as to be protected from accidental damage during routine operation and maintenance.

Sample flow rates and sample line sizes and lengths are specified to ensure turbulent flow, thereby avoiding possible stratification or plateout of samples, and to minimize time lags. Sample lines are routed to avoid stagnant regions, lines, corrosion, and radioactive crud traps. At Byron, steam samples are extracted from sampling probes in accordance with ASTM Standard D1066-69 or EPRI report TR-100196, "Development of a Steam Sampling System."

Local sample connections are provided at various locations throughout the plant. These connections are shown on the respective flow diagrams and are not considered part of the sampling system.

9.3.2.2.3 Safety Evaluation

The system is not required to function during an emergency, nor is it required to take action to prevent an emergency condition.

The sample sinks for potentially radioactive samples in the secondary systems are contained in a vented hood (filtered vent system) to protect personnel performing sampling operations. The sink and floor drains flow to the waste disposal system, minimizing operator exposure to potential radioactive leakage. Leakage is minimized by the use of welded piping connections, where possible. Adequate safety/relief valves are provided in sample lines which discharge on excess pressure to the vented sample sink. Temperature and flow malfunctions in the sample temperature control system alarm locally and in the main control room. In the event of a significant radioactive discharge in the primary sample room, a high-radiation alarm is initiated in the main control room, thereby backing up other radiological protectives described previously.

9.3.2.2.4 Tests and Inspections

Preoperational tests are described in Chapter 14.0. A component demonstration test will be performed on the remainder of the secondary sample system.

The equipment manufacturer's recommendations and station practices are considered in determining required maintenance.

9.3.2.2.5 Instrumentation Application

Each continuous analyzer output is recorded and off-limit conditions are alarmed on the local analyzer panel. For analyzer and personnel protection purposes, loss-of-sample-cooling-waterflow alarms and a high-sample-cooling-water-temperature alarms are provided on the local analyzer panel. A master trouble alarm annunciates in the control room on the incidence of an alarm at the local analyzer panel.

Cooling water temperature is regulated by means of a modulating temperature control system. Cooling water temperature and actual sample temperature and pressure are indicated on the local analyzer panel. Sample flow indication is provided on the local panel for each analyzer.

Pages 9.3-13 through 9.3-18
have been deleted intentionally

9.3.3 Equipment and Floor Drainage System

Drainage from equipment and the floor drain system throughout the containments, auxiliary building, and turbine building are collected in drain tanks and sumps. From these collection points, the drainage is pumped to drain analysis tanks where composition and radioactivity are determined as required. Following such analyses, a suitable method of treatment and disposal or recycling is determined, as discussed in Section 11.2.

9.3.3.1 Auxiliary Building Leak Detection Sumps

Leak detection sumps are provided in the following locations in the auxiliary building:

a. residual heat removal pump areas,

b. containment spray pump areas,

c. residual heat removal heat exchanger rooms,

d. component cooling water pump and heat exchanger area,

e. auxiliary feedwater pump areas, and

f. essential service water pump cubicles.

The leak detection sumps are designed such that the orifice provided on the discharge of each sump passes a specified amount of drainage to the auxiliary building floor drain sumps. Any drainage in excess of the specified amount accumulates in the sump. When the sump level reaches a preset high level, an alarm annunciates at the radwaste panel

(OPL01J), and leakage will then flow through drain lines to the auxiliary building floor drain sumps. All floor areas near the leak detection sumps are sloped toward the sumps.

The auxiliary building equipment drain collecting sumps are shown diagrammatically in Drawing M-48-17; the essential service water sumps are shown diagrammatically in Drawing M-48-19; the auxiliary building sumps are shown diagrammatically in Drawings M-48-6A and -6B; and the auxiliary building leak detection sumps are shown diagrammatically in Drawing M-48-28. Inasmuch as the control room annunciators are neither safety-related nor redundant, the high level alarms at the leak detection sumps are neither safety-related nor redundant. Drawing M-82 diagrammatically shows auxiliary building equipment drains, and Drawings A-703 through A-705 diagrammatically show auxiliary building floor drains. There are separate compartments for the redundant essential service water pumps of each unit; there are no high energy lines that contain sufficient fluid to flood safety-related systems and components per Branch Technical Position ASB 3-1; and the floor drain system is adequate to handle the effluent from throughwall leakage cracks in moderate energy fluid systems per Appendix A of J. F. O'Leary's letter of July 12, 1973. Therefore, the floor drain and equipment drain systems meet current regulatory requirements.

9.3.3.2 Auxiliary Building Safety-Related Components Area Flood Analysis

Calculations have been completed for both Byron and Braidwood to ensure that the Byron/Braidwood design will accommodate flooding as a result of high and moderate energy line breaks with no adverse effects on the capability to safely shut the plant down. Design features such as enclosure of safety-related equipment by structural walls, separation of redundant safety systems, and drainage into stairways and open areas prevent a loss of safe shutdown capability in the event of moderate or high energy line breaks in the auxiliary building.

The auxiliary building flooding study examined 219 separate areas in the auxiliary building. Twenty-eight of these areas were large general areas and the remaining 191 were considered subcompartments. Subcompartments are enclosed by structural walls and open into other areas only by doorways. Pipe breaks and cracks were defined following the guidelines in Section 3.6. In general, fluid release was calculated for the lines with postulated breaks and the line that resulted in the greatest release rate was designated as the limiting failure. In certain areas, lines that exceeded the SRP criteria for postulating a break were conservatively assumed to fail because the postulated break of these lines resulted in the maximum release rate for the affected flood zone. Through-wall cracks were postulated in Category II systems following the Standard Review Plan guidelines. This approach is justified because of the Byron/Braidwood design criteria for Category II piping systems in the auxiliary building. The Category II piping is both designed and supported to withstand seismic loads. The allowable stresses are the same as those used with

equivalent Category I pipe. As a result, Category II systems are no more likely to be loaded beyond design than Category I systems. Maximum flood levels were defined for a break within an area and for breaks outside the area which might raise the flood level.

Fluids are considered to drain from subcompartments and general areas by way of doorways, stairwells, open hatches, and floor drains. Doors are considered to be open or closed to maximize the flood levels. The floor drain system in the Byron/Braidwood plants is a Safety Category II system but is supported to withstand seismic loads throughout the auxiliary building. Credit is taken for the floor drain capacity since there is no potential failure mode for the auxiliary building drain pipes which would prevent drainage.

No check valves are used in the drain system. Flooding caused by back flow does not adversely affect the plant. The floor drains are 4 inches in diameter. Drains between redundant safety-related subcompartments are 6 inches in diameter. As a result, drain flow is limited at the floor drain inlet and will not back up. The drains lead to the auxiliary building sump room (one per unit). In the event of a sump pump failure, water will accumulate in this room and could back up into the adjacent auxiliary building equipment drain tank pump room. The auxiliary building sump room in combination with the auxiliary building equipment drain tank pump room will hold about 4000 ft^3 of water. Assuming these rooms are watertight, the water would then begin to back up into the RHR and containment spray pump rooms at elevation 343 feet. No leaks or breaks will flood to the lowest safe shutdown equipment above elevation 346 feet within 30 minutes except for a break of the 48-inch essential service water line. This break, if all the leakage drained into one unit's floor drain system, would damage the RHR pump room cubicle coolers in 21 minutes. However, this line is between the two units in a general area which would drain to both auxiliary building sump rooms. At least one-third of the leakage would go to each unit, ensuring that the coolers would not be flooded within 30 minutes. Therefore, no check valves are required.

The auxiliary building is equipped with leak detection sumps which will detect any leakage above normal rates. Also, plant personnel regularly check the general conditions in the auxiliary building. As a result, it is assumed that any postulated break is isolated 30 minutes after the break occurrence. All systems with postulated breaks, which contain sufficient inventory to cause significant flooding can be isolated. After isolation, the analysis was continued until the levels stabilized to ensure that maximum levels were calculated in areas away from the break. If isolation is not assumed, 34 areas would experience increasing flood levels after 30 minutes. All but two of these areas are on elevations 330 feet or 346 feet. In general, safe shutdown equipment is not located in these areas or protected by watertight doors. The RHR pumps are not required for hot shutdown but are required for cold shutdown. The pumps are not protected by watertight doors but are elevated to prevent flood

damage. The two remaining areas are a surface condenser room on elevation 401 feet and a subcompartment on elevation 475 feet 6 inches. Neither of these areas contains safe shutdown equipment.

Of the 219 areas analyzed, at Byron 138 of these areas (145 at Braidwood) will not be subject to flooding greater than 4 inches deep. Electrical equipment is located at least 4 inches above the floor to eliminate flooding concerns. These areas, therefore, require no additional analysis.

The remaining 81 areas could experience water levels greater than 4 inches. These 81 areas are primarily located in the lower levels of the auxiliary building. Of these, 31 at Byron and 28 at Braidwood would not flood above 10 inches and 50 at Byron and 46 at Braidwood were predicted to flood above 10 inches. The more critical of these areas are individually discussed in the following paragraphs.

The auxiliary building basement is at elevation 330 feet. All rooms and areas on this elevation have been designed to accommodate flooding. The floor drain sump and equipment drain pump rooms for Units 1 and 2 have been fitted with watertight doors. These rooms can be filled without affecting safe shutdown equipment. The essential service water valve pits, if flooded, would result in failure of the motor-operated valves. The as-is position can be considered the safe position because the essential service water systems are redundant and separated by structural walls. The general area contains the essential service water pumps and strainers. The doorways and penetrations leading into this area are watertight, except for ventilation ducts connecting the essential service water pump areas with the adjacent auxiliary building floor drain sump pump and equipment drain pump rooms. The structural walls are adequate to withstand the forces of flooding in adjacent areas. Although not required to be postulated as a crack location due to low stress levels, at Byron the crack of a 36-inch essential service water line within the area would result in a maximum flood level of 19 inches. At Braidwood, a break of a 4-inch chemical feed line is the limiting postulated failure and results in a flood level below 2 inches. Even if the system in the area is affected, there will be no impact on the redundant system, which is separated by a structural wall. The worst case design basis flooding from a pipe break on auxiliary building elevation 346 feet and above will fill the auxiliary building floor drain sump pump and equipment drain pump rooms with water, eventually overflowing into the essential service water pump areas via the ventilation ducts. The resulting flood levels in the essential service water pump rooms will not impact the operation of safe shutdown equipment in the rooms.

On the 346-foot elevation, flooding above the 4-inch level is predicted in all general areas and subcompartments. The only equipment on this elevation required for either hot or cold shutdown of the plant under any conditions is in either the residual heat removal pump rooms or the containment spray pump rooms. The residual heat removal pump rooms and the containment spray pump rooms are interconnected.

The floor of these rooms is at elevation 343 feet, 3 feet below the general area. The containment spray pumps are required only during accident conditions and, therefore, are not required under normal conditions as defined in the Standard Review Plan. However, the containment spray pumps are elevated to prevent flooding from disabling the pump. The RHR pumps are used during normal shutdown but are not required (except in

LOCA conditions) to bring the plant to a safe hot shutdown condition. In a normal shutdown, the RHR system will be used when the reactor pressure is below about 360 psig to cool the reactor. At this time, a 16-inch RHR system line in the RHR pump room or a 24-inch safety injection system (RHR suction) line in the containment spray pump room will be pressurized. A failure of these lines would cause flooding up to the level of the 346 foot general area. The subcompartments in question are located at elevation 343 feet so a flood of about 3 feet could be postulated. The RHR pumps, like the containment spray pumps, are elevated well above the predicted flood level. This also protects the pumps from flooding in the event a pipe in the general area fails and floods these subcompartments. The only equipment which would be damaged by this flooding is the cubicle coolers. This would cause a gradual increase in the room operating temperatures, but would not impair the ability to safely shut down the plant.

On the 364-foot elevation, the general areas adjacent to Unit 1 and Unit 2 containments could experience flooding to a maximum level of 17 inches from a break of a 4-inch discharge line from a centrifugal charging pump. The only safe shutdown equipment affected is a motor control center. Following this break and any subsequent single active failure, the plant can be safely shut down without the safe shutdown equipment controlled by this motor control center.

A number of subcompartments could be flooded greater than 4 inches on each unit. These are: on each Byron and Braidwood unit the blowdown condenser room, the B safety injection pump room, and the two centrifugal charging pump rooms; the two RHR heat exchanger rooms for Byron and the 1A, 2A and 2B RHR heat exchanger rooms for Braidwood, and the Regeneration Waste Drain pump room. The loss of the safety-related equipment affected by these breaks does not prevent safe shutdown of the plant.

The only safe shutdown equipment located on the 383 foot elevation are the Auxiliary Feedwater pumps. At Byron, a crack in the 2-inch auxiliary feedwater line in the Unit 1 or Unit 2 auxiliary feedwater diesel-driven pump room could result in a 5-inch flood level. At Braidwood, although not required to be postulated as crack locations due to low stress levels, a crack in the 20-inch nonessential service water line in the Unit 1 auxiliary feedwater diesel-driven pump room and a crack in the 30-inch nonessential service water line in the Unit 2 auxiliary feedwater diesel-driven pump room could result in a 6-inch and a 13-inch flood level, respectively.

In both cases, this would have no effect on the diesel-driven auxiliary feedwater pumps or the redundant motor-driven pumps. The flood level calculated due to a crack in the non-essential service water lines at Braidwood are higher than the calculated design basis limiting flood levels.

On the 401-foot elevation, a failure of a 2-inch boric acid line would result in a flood level of about 7 inches in the boric acid transfer pump room. Borated water from the RWST can be used in lieu of the boric acid transfer pumps. Nonessential service water line failures could flood the radwaste surface condenser rooms to levels of near 70 inches.

No safe shutdown equipment is affected by flooding in the surface condenser rooms. An HVAC equipment room on elevation 401 feet is predicted to flood. This room contains the radwaste exhaust filter plenums and associated equipment which is not safety related. The only safety-related systems in this area are the essential service water piping and the radiation monitoring on the RCFC cooling water outlet. The flood will not affect the essential service water system operation and the radiation monitoring function is not required to mitigate any results of the flood.

On the 414-foot elevation, a crack in a 22-inch radwaste line could result in a 3-inch flood level in a radwaste evaporator room. This room does not contain safe shutdown equipment.

On the 426-foot elevation, a break in the CV letdown line could result in a 28-inch flood level in the VCT valve aisle. The plant would be shut down using excess letdown and charging from the RWST.

No flood levels greater than 4-inches are postulated on the 439, 451, 463, or 475 foot 6-inch elevations.

At elevation 475 feet 6 inches, all cables with safety functions have redundant cables located in another cable spreading area which is separated by structural walls.

Based on a review of the results of the flood level calculations, it has been concluded that flooding will not adversely affect the capability to safely shut down the plant. The architectural design of the plant, the drain systems, the redundancy and separation of safety systems and the installation of watertight closures ensure the plant safety.

9.3.4 Chemical and Volume Control System

The chemical and volume control system (CVCS) is shown in Drawings M-64 and M-64A and is designed to provide the following services to the reactor coolant system (RCS):

a. maintenance of programmed water level in the pressurizer, i.e., maintain required water inventory in the RCS;

b. maintenance of seal-water injection flow to the reactor coolant pumps;

c. control of reactor coolant water chemistry conditions, activity level, soluble chemical neutron absorber concentration, and makeup;

d. emergency core cooling (part of the system is shared with emergency core cooling system); and

e. provide means for filling, draining, and pressure testing of the RCS.

9.3.4.1 Design Bases

Quantitative design bases are given in Table 9.3-2 with qualitative descriptions given in the following.

9.3.4.1.1 Reactivity Control

The CVCS regulates the concentration of chemical neutron absorber (boron) in the reactor coolant to control reactivity changes resulting from the change in reactor coolant temperature between cold shutdown and hot full-power operation, burnup of fuel and burnable poisons, buildup of fission products in the fuel, and xenon transients.

Reactor Makeup Control

a. The CVCS is capable of borating the RCS through either one of two flow paths and from either one of two boric acid sources.

b. The amount of boric acid stored in the CVCS always exceeds that amount required to borate the RCS to cold shutdown concentration assuming that the control assembly with the highest reactivity worth is stuck in its fully withdrawn position. This amount of boric acid exceeds the amount required to bring the reactor to hot standby and to compensate for subsequent xenon decay.

Boron Thermal Regeneration

The CVCS is designed to control the changes in reactor coolant boron concentration to compensate for the xenon transients during load follow operations without adding makeup for either boration or dilution. This is accomplished by the boron thermal regeneration process which is designed to allow load follow operation as required by the design load cycle.

9.3.4.1.1.1 Regulation of Reactor Coolant Inventory

The CVCS maintains the coolant inventory in the RCS within the allowable pressurizer level range for all normal modes of operation including startup from cold shutdown, full power operation, and plant cooldown. This system also has sufficient

makeup capacity to maintain the minimum required inventory in the event of minor RCS leaks (see the Technical Specifications for a discussion of maximum allowable RCS leakage).

9.3.4.1.1.2 Reactor Coolant Purification

The CVCS is capable of removing fission and activation products, in ionic form or as particulates, from the reactor coolant in order to provide access to those process lines carrying reactor coolant during operation and to reduce activity releases due to leaks.

9.3.4.1.1.3 Chemical Additions for Corrosion Control

The CVCS provides a means for adding chemicals to the RCS which controls the pH of the coolant during initial startup and subsequent operation, scavenge oxygen from the coolant during startup, and counteract the production of oxygen in the reactor coolant due to radiolysis of water in the core region.

The CVCS is capable of maintaining the oxygen content and pH of the reactor coolant as defined in Subsection 5.2.3.2.1.

The CVCS also provides a means for adding zinc acetate solution to the RCS, which has been demonstrated to reduce corrosion rates on primary system surfaces.

9.3.4.1.1.4 Seal Water Injection

The CVCS is able to continuously supply filtered water to each reactor coolant pump seal, as required by the reactor coolant pump design.

9.3.4.1.1.5 Hydrostatic Testing of the Reactor Coolant System

The CVCS is capable of supplying water at the maximum test pressure specified to verify the integrity of the RCS. The hydrostatic test is performed prior to initial operation and system pressure tests are performed as part of the Inservice Pressure Testing program in accordance with ASME Section XI requirements.

9.3.4.1.1.6 Emergency Core Cooling

The centrifugal charging pumps in the CVCS also serve as the high-head safety injection pumps in the emergency core cooling system. Other than the centrifugal charging pumps and associated piping and valves, the CVCS is not required to function during a loss-of-coolant accident (LOCA). During a LOCA, the CVCS is isolated except for the centrifugal charging pumps and the piping in the safety injection path, and the reactor coolant pump seal injection path.

9.3.4.1.2 System Description

The CVCS is shown in Drawings M-64 and M-64A (piping and instrumentation diagram) with system design parameters listed in Table 9.3-2. The codes and standards to which the individual components of the CVCS are designed are listed in Subsection 3.2.1.1. The CVCS consists of several subsystems: the charging, letdown and

seal water system; the reactor coolant purification and chemistry control system; the reactor makeup control system; and the boron thermal regeneration system.

9.3.4.1.2.1 Charging, Letdown, and Seal Water System

The charging and letdown functions of the CVCS are employed to maintain a programmed water level in the RCS pressurizer, thus maintaining proper reactor coolant inventory during all phases of plant operation. This is achieved by means of continuous feed and bleed process during which the feed rate is automatically controlled based on pressurizer water level. The bleed rate can be chosen to suit various plant operational requirements by selecting the proper combination of letdown orifices in the letdown flow path.

Reactor coolant is discharged to the CVCS from a reactor coolant loop cold leg; it then flows through the shell side of the regenerative heat exchanger where its temperature is reduced by heat transfer to the charging flow passing through the tubes. The coolant then experiences a large pressure reduction as it passes through the letdown orifice(s) and flows through the tube side of the letdown heat exchanger where its temperature is further reduced. Downstream of the letdown heat exchanger a second pressure reduction occurs. This second pressure reduction is performed by the low pressure letdown valve, the function of which is to maintain upstream pressure thus preventing flashing downstream of the letdown orifices.

The coolant may then be directed through one of the mixed bed demineralizers. The flow may then pass through the cation bed demineralizer which is used intermittently when additional purification of the reactor coolant is required.

From a point upstream of the boron thermal regeneration system or from a point upstream of the reactor coolant filters (for Braidwood only), a small sample flow may be diverted from the letdown stream to the boron concentration measurement system (see Section 7.7). The readout on the boron concentration is given in the main control room at Braidwood only.

During reactor coolant boration and dilution operations, especially during load follow, the letdown flow leaving the demineralizers may be directed to the boron thermal regeneration system. The coolant then flows through the reactor coolant filter and into the volume control tank through a spray nozzle in the top of the tank. Hydrogen overpressure is maintained in the volume control tank. If tank pressure decreases, hydrogen is admitted and if tank pressure increases the hydrogen and fission gases (which have been stripped from the reactor coolant) may be vented to the waste processing system. The partial pressure of hydrogen in the volume control tank determines the concentration of hydrogen dissolved in the

reactor coolant for control of oxygen produced by radiolysis of water in the core.

Three pumps (one positive displacement pump, and two centrifugal charging pumps) are provided to take suction from the volume control tank and return the cooled, purified reactor coolant to the RCS. (The positive displacement charging pump can be expected to be administratively isolated for extended periods of time.) Normal charging flow is handled by one of the three charging pumps. This charging flow splits into two paths. The bulk of the charging flow is pumped back to the RCS through the tube side of the regenerative heat exchanger. The letdown flow in the shell side of the regenerative heat exchanger raises the charging flow to a temperature approaching the reactor coolant temperature. The flow is then injected into a cold leg of the RCS. Two charging paths are provided from a point downstream of the regenerative heat exchanger. A flow path is also provided from the regenerative heat exchanger outlet to the pressurizer spray line. An air-operated valve in the spray line is employed to provide auxiliary spray to the vapor space of the pressurizer during plant cooldown. This provides a means of cooling the pressurizer near the end of plant cooldown, when the reactor coolant pumps, which normally provide the driving head for the pressurizer spray, are not operating.

A portion of the charging flow is directed to the reactor coolant pumps (nominally 8 gpm per pump) through a seal water injection filter. It is directed down to a point between the pump shaft bearing and the thermal barrier cooling coil. Here the flow splits and a portion (nominally 5 gpm per pump) enters the RCS through the labyrinth seals and thermal barrier. The remainder of the flow is directed up the pump shaft, cooling the lower bearing, and to the number 1 seal leakoff. The number 1 seal leakoff flow discharges to a common manifold, exits from the containment, and then passes through the seal water return filter and the seal water heat exchanger to the suction side of the charging pumps, or by alternate path to the volume control tank. A very small portion of the seal flow leaks through to the number 2 seal. A number 3 seal provides a final barrier to leakage of reactor coolant to the containment atmosphere. The number 2 leakoff flow is discharged to the reactor coolant drain tank in the liquid waste processing system. The number 3 seal leakoff flow is discharged to the containment sump (this leakoff flow consists of a portion of the reactor makeup water which is injected into the number 3 seal).

The excess letdown path is provided as an alternate letdown path from the RCS in the event that the normal letdown path is inoperable. Reactor coolant can be discharged from a cold leg to flow through the tube side of the excess letdown heat exchanger where it is cooled by component cooling water. Downstream of the heat exchanger a remote-manual control valve controls the letdown flow. The flow normally joins the number 1 seal discharge manifold and passes through the seal water

return filter and heat exchanger to the suction side of the charging pumps. The excess letdown flow can also be directed to the reactor coolant drain tank or directly into the volume control tank via a spray nozzle. When the normal letdown line is not available, the normal purification path is also not in operation. Therefore, this alternate condition would allow continued power operation for a limited period of time, dependent on RCS chemistry and activity. The excess letdown flow path is also used to provide additional letdown capability during the final stages of plant heatup. This path removes some of the excess reactor coolant due to expansion of the system as a result of the RCS temperature increase.

Surges in RCS inventory due to load changes are accommodated for the most part in the pressurizer. The volume control tank provides surge capacity for reactor coolant expansion not accommodated by the pressurizer. If the water level in the volume control tank exceeds the normal operating range, a proportional controller modulates a three-way valve downstream of the reactor coolant filter to divert a portion of the letdown to the boron recycle system. If the high-high-level limit in the volume control tank is reached, an alarm is actuated in the control room and the letdown flow is completely diverted to the boron recycle system.

Low level in the volume control tank initiates makeup from the reactor makeup control system. If the reactor makeup control system does not supply sufficient makeup to keep the volume control tank level from falling to a lower level, a low alarm is actuated. Manual action may correct the situation or, if the level continues to decrease, an emergency low level signal from both level channels causes the suction of the charging pumps to be transferred to the refueling water storage tank.

The reciprocating charging pump is also used to perform hydrostatic tests which verify the integrity and leaktightness of the RCS. The pump can pressurize the RCS to the maximum designated test pressure. The hydrostatic test is performed prior to initial operation and system pressure tests are performed as part of the Inservice Pressure Testing program in accordance with ASME Section XI requirements.

9.3.4.1.2.2 Reactor Coolant Purification and Chemistry Control System

A description of the reactor coolant purification and chemistry control system can be found in Subsection 5.2.3.2.1. Reactor coolant water chemistry specifications are given in the Technical Requirements Manual (TRM) 3.4.b.

pH Control

The pH control chemical employed is lithium hydroxide. This chemical is chosen for its compatibility with the materials and water chemistry of borated water/stainless steel/zirconium/

inconel systems. In addition, Lithium-7 is produced in the core region due to irradiation of the dissolved boron in the coolant.

The concentration of Lithium-7 in the RCS is maintained in the range specified for pH control. If the concentration exceeds this range, as it may during the early stages of a core cycle, the cation bed demineralizer is employed in the letdown line in series operation with a mixed bed demineralizer. Since the amount of lithium to be removed is small and its buildup can be readily calculated, the flow through the cation bed demineralizer is not required to be full letdown flow. If the concentration of Lithium-7 is below the specified limits, lithium hydroxide can be introduced into the RCS via the charging flow. The solution is poured into the chemical mixing tank. Reactor makeup water is then used to flush the solution to the suction manifold of the charging pumps.

Oxygen Control

During initial reactor startup from the cold shutdown condition, hydrazine is employed as an oxygen scavenging agent. The hydrazine solution is introduced into the RCS in the same manner as described above for the pH control agent. Following initial power operation, hydrogen may be used in place of or in conjunction with hydrazine for oxygen scavenging during startup from the cold shutdown condition. Hydrogen is introduced into the RCS in the same manner as described below.

Dissolved hydrogen is employed to control and scavenge oxygen produced due to radiolysis of water in the core region. Sufficient partial pressure of hydrogen is maintained in the volume control tank such that the specified equilibrium concentration of hydrogen is maintained in the reactor coolant. A pressure control maintains a minimum pressure in the vapor space of the volume control tank. This valve can be adjusted to provide the correct equilibrium hydrogen concentration (25 to 50 cc hydrogen at STP per kilogram of water). Hydrogen is supplied from the hydrogen manifold in the gaseous waste processing system.

Reactor Coolant Purification

Mixed bed demineralizers are provided in the letdown line to provide cleanup of the letdown flow. The demineralizers remove ionic corrosion products and certain fission products. One demineralizer is in continuous service and can be supplemented intermittently by the cation bed demineralizer, if necessary, for additional purification. The cation resin removes principally cesium and lithium isotopes from the purification flow. The second mixed bed demineralizer serves as a standby unit for use if the operating demineralizer becomes exhausted during operation.

A further cleanup feature is provided for use during cold shutdown and residual heat removal. A remote operated valve admits a bypass flow from the residual heat removal system (RHRS) into the letdown line upstream of the letdown heat exchanger. The flow passes through the heat exchanger, through a mixed bed demineralizer and the reactor coolant filter to the volume control tank. The fluid is then returned to the RCS via the normal charging route.

Filters are provided at various locations to ensure filtration of particulate and resin fines and to protect the seals on the reactor coolant pumps.

9.3.4.1.2.3 Reactor Makeup Control System

The soluble neutron absorber (boric acid) concentration is controlled by the boron thermal regeneration system and by the reactor makeup control system. The reactor makeup control system is also used to maintain proper reactor coolant inventory. In addition, for emergency boration and makeup, the capability exists to provide refueling water or 4 wt. % boric acid directly to the suction of the charging pump.

The reactor makeup control system provides a manually preselected makeup composition to the charging pump suction header or to the volume control tank. The makeup control functions are those of maintaining desired operating fluid inventory in the volume control tank and adjusting reactor coolant boron concentration for reactivity control. Reactor makeup water and boric acid solution (4 wt. %) are blended together at the reactor coolant boron concentration for use as makeup to maintain volume control tank inventory or they can be used separately to change the reactor coolant boron concentration.

At Braidwood, a boron concentration measurement system (see Section 7.7) is provided to monitor the boron content of the reactor coolant in the letdown line. However, the equipment is not operated.

The boric acid is stored in two boric acid tanks. Three boric acid transfer pumps are provided with one pump normally aligned to provide boric acid to the suction header of the charging pumps of each unit and the third pump in reserve. On a demand signal by the reactor makeup controller, the pump starts and delivers boric acid to the suction header of the charging pumps. The pump can also be used to recirculate the boric acid tank fluid.

All portions of the CVCS which normally contain concentrated boric acid solution (4 wt. % boric acid) are required to be located with a heated area in order to maintain solution temperature at ≥ 65°F.

The reactor makeup water (primary water makeup) pumps, taking suction from the reactor makeup water (primary water) storage tank, are employed for various makeup and flushing operations throughout the systems. One of these pumps also starts on demand from the reactor makeup controller and provides flow to the suction header of the charging pumps or the volume control tank through the letdown line and spray nozzle.

During reactor operation, changes are made in the reactor coolant boron concentration for the following conditions:

a. Reactor startup - boron concentration must be decreased from shutdown concentration to return to power operation.

b. Load follow - boron concentration must be either increased or decreased to compensate for the xenon transient following a change in load.

c. Fuel burnup - boron concentration must be decreased to compensate for fuel burnup and the buildup of fission products in the fuel.

d. Cold shutdown - boron concentration must be increased to the cold shutdown concentration.

The boron thermal regeneration system is normally used to control boron concentration to compensate for xenon transients during load follow operations. Boron thermal regeneration can also be used in conjunction with dilution operations of the reactor makeup control system to reduce the amount of effluent to be processed by the boron recycle system.

The reactor makeup control system can be set up for the following modes of operation:

a. <u>Automatic Makeup</u>

The "automatic makeup" mode of operation of the reactor makeup control system provides blended boric acid solution, preset to match the boron concentration in the RCS. Automatic makeup compensates for minor leakage of reactor coolant without causing significant changes in the reactor coolant boron concentration.

Under normal plant operating conditions, the mode selector switch is set in the "automatic makeup" position. This switch position establishes a preset control signal to the total makeup flow controller and establishes positions for the makeup stop valves for automatic makeup. The boric acid flow controller is set to blend to the same concentration of borated water as contained in the RCS.

A preset low level signal from the volume control tank level controller causes the automatic makeup control action to start a reactor makeup water pump, start a boric acid transfer pump, open the makeup stop valve to the charging pump suction, and position the boric acid flow control valve and the reactor makeup water flow control valve. The flow controllers then blend the makeup stream according to the preset concentration. Makeup addition to the charging pump suction header causes the water level in the volume control tank to rise. At a preset high level point, the makeup is stopped. This operation may be terminated manually at any time.

If the automatic makeup fails or is not aligned for operation and the tank level continues to decrease, a low level alarm is actuated. Manual action may correct the situation or, if the level continues to decrease, an emergency low level signal opens the stop valves in the refueling water supply line to the charging pumps, and closes the stop valves in the volume control tank outlet line.

b. Dilution

The "dilute" mode of operation permits the addition of a preselected quantity of reactor makeup water at a preselected flow rate to the RCS. The operator sets the mode selector switch to "dilute," the total makeup flow controller setpoint to the desired flow rate, the total makeup batch integrator to the desired quantity and initiates system start. This opens the reactor makeup water flow control valves, opens the makeup stop valve to the volume control tank inlet, and starts a reactor makeup water pump. Excessive rise of the volume control tank water level is prevented by automatic actuation (by the tank level controller) of a three-way diversion valve which routes the reactor coolant letdown flow to the boron recycle system. When the preset quantity of water has been added, the batch integrator causes makeup to stop. Also, the operation may be terminated manually at any time.

Dilution can also be accomplished by operating the boron thermal regeneration system in the boron storage mode.

c. Alternate Dilution

The "alternate dilute" mode of operation is similar to the dilute mode except a portion of the dilution

water flows directly to the charging pump suction and a portion flows into the volume control tank via the spray nozzle and then flows to the charging pump suction. This decreases the delay in diluting the RCS caused by directing dilution water to the volume control tank.

d. Boration

The "borate" mode of operation permits the addition of a preselected quantity of concentrated boric acid solution at a preselected flow rate to the RCS. The operator sets the mode selection switch to "borate," the concentrated boric acid flow controller setpoint to the desired flow rate, the concentrated boric acid batch integrator to the desired quantity, and initiates system start. This opens the makeup stop valve to the charging pumps suction, positions the boric acid flow control valve, and starts the selected boric acid transfer pump, which delivers a 4 wt. % boric acid solution to the charging pumps suction header. The total quantity added in most cases is so small that it has only a minor effect on the volume control tank level. When the preset quantity of concentrated boric acid solution is added, the batch integrator causes makeup to stop. Also, the operation may be terminated manually at any time.

Boration can also be accomplished by operating the boron thermal regeneration system in the boron release mode.

e. Manual

The "manual" mode of operation permits the addition of a preselected quantity and blend of boric acid solution to the volume control tank, to the refueling water storage tank, to the recycle holdup tanks in the boron recycle system, or to some other location via a temporary connection. While in the manual mode of operation, automatic makeup to the RCS is precluded. The discharge flow path must be prepared by opening remote manual valves in the desired path.

The operator sets the mode selector switch to "manual," the boric acid and total makeup flow controllers to the desired flow rates, the boric acid and total makeup batch integrators to the desired quantities, and actuates the makeup start switch.

The start switch actuates the boric acid flow control valve and the reactor makeup water flow control valve and starts the preselected reactor makeup water pump and boric acid transfer pump.

When the preset quantities of boric acid and reactor makeup water have been added, the batch integrators cause makeup to stop. This operation may be stopped manually by actuating the makeup stop switch.

If either batch integrator is satisfied before the other has recorded its required total, the pump and valve associated with the integrator which has been satisfied will terminate flow. The flow controlled by the other integrator will continue until that integrator is satisfied. In the manual mode, the boric acid flow is terminated first to prevent piping systems from remaining filled with 4 wt. % boric acid solution.

The quantities of boric acid and reactor makeup water injected are totalized by the batch counters and the flow rates are recorded on recorders. Deviation alarms sound for both boric acid and reactor makeup water if flow rates deviate from setpoints.

9.3.4.1.2.4 Boron Thermal Regeneration System

The boron thermal regeneration system is no longer used. Portions of the chiller units' electrical system control circuitry and piping have been revised for use on the letdown booster pumps. These changes would need to be restored to their original configuration to allow operation of the boron thermal regeneration system.

Downstream of the mixed bed demineralizers, the letdown flow can be diverted to the boron thermal regeneration system where part or all of the letdown flow can be treated when boron concentration changes are desired for load follow. After processing, the flow is returned to a point upstream of the reactor coolant filter.

At Braidwood, the boron concentration measurement system (see Section 7.7) can be used to monitor the boron content in the letdown stream before it is diverted to the boron thermal regeneration system for processing; or, it can monitor the adjusted boron content of the letdown stream after it has been treated by the thermal regeneration process.

Storage and release of boron during load follow operation is determined by the temperature of fluid entering the thermal regeneration demineralizers. A chiller unit and a group of heat exchangers are employed to provide the desired fluid temperatures at the demineralizer inlets for either storage or release operation of the system.

At Byron, the nonessential service water supply to the boron thermal regeneration system chillers has been isolated permanently. Therefore, the chillers are not functional at Byron. The boron thermal regeneration system is no longer used at Byron or Braidwood. The following paragraphs describe intended or prior system operation at Byron and Braidwood.

The flow path through the boron thermal regeneration system is different for the boron storage and the boron release operations. During boron storage, the letdown stream enters the

moderating heat exchanger and from there it passes through the letdown chiller heat exchanger. These two heat exchangers cool the letdown stream prior to its entering the demineralizers. The letdown reheat heat exchanger is valved out on the tube side and performs no function during boron storage operations. The temperature of the letdown stream at the point of entry to the demineralizers is controlled automatically by the temperature control valve which controls the shell side flow to the letdown chiller heat exchanger. After passing through the demineralizers, the letdown enters the moderating heat exchanger shell side, where it is heated by the incoming letdown stream before going to the volume control tank.

Therefore, for boron storage, a decrease in the boric acid concentration in the reactor coolant is accomplished by sending the letdown flow at relatively low temperatures to the thermal regeneration demineralizers. The resin, which was depleted of boron at high temperature during a prior boron release operation, is now capable of storing boron from the low temperature letdown stream. Reactor coolant with a decreased concentration of boric acid leaves the demineralizers and is directed to the RCS via the charging system.

During the boron release operation, the letdown stream enters the moderating heat exchanger tube side, bypasses the letdown chiller heat exchanger, and passes through the shell side of the letdown reheat heat exchanger. The moderating and letdown reheat heat exchangers heat the letdown stream prior to its entering the resin beds. The temperature of the letdown at the point of entry to the demineralizers is controlled automatically by the temperature control valve which controls the flow rate on the tube side of the letdown reheat heat exchanger. After passing through the demineralizers, the letdown stream enters the shell side of the moderating heat exchanger, passes through the tube side of the letdown chiller heat exchanger and then goes to the volume control tank. The temperature of the letdown stream entering the volume control tank is controlled automatically by adjusting the shell side flow rate on the letdown chiller heat exchanger. Thus, the boron release, an increase in the boric acid concentration in the reactor coolant is accomplished by sending the letdown flow at relatively high temperatures to the thermal regeneration demineralizers. The water flowing through the demineralizers now releases boron which was stored by the resin at low temperature during a previous boron storage operation. The boron enriched reactor coolant is returned to the RCS via the charging system.

Although the boron thermal regeneration system is primarily designed to compensate for xenon transients occurring during load follow, it can also be used to adjust boron concentration during startup. For example, the resin beds can be saturated, then washed to the boron recycle system, resaturated and rewashed. This dilution operation continues until the desired RCS boron concentration is obtained.

As an additional function, a thermal regeneration demineralizer can be used as a deborating demineralizer, which would be used to dilute the RCS down to very low boron concentrations towards the end of a core cycle. To make such a bed effective, the effluent concentration from the bed must be kept very low, close to 0 ppm boron. This low effluent concentration can be achieved by using fresh resin. Use of fresh resin can be coupled with the normal replacement cycle of the resin; one resin bed being replaced during each core cycle.

9.3.4.1.2.5 Component Description

A summary of principal component design parameters is given in Table 9.3-3, and safety classifications and design codes are given in Section 3.2.

All CVCS piping that handles radioactive liquid is austenitic stainless steel. All piping joints and connections are welded, except where flanged connections are required to facilitate equipment removal for maintenance and hydrostatic testing.

Charging Pumps

In reference to the positive displacement charging pump in the following discussions and tables, it is understood that the pump can be isolated administratively mechanically and electrically for extended periods of time. The Centrifugal Charging Pumps are the preferred means of providing normal RCS charging. Three charging pumps are supplied to inject coolant into the RCS. Two of the pumps are of the single speed, horizontal, centrifugal type, and the third is a positive displacement (reciprocating) pump equipped with variable speed drive. All parts in contact with the reactor coolant are fabricated of austenitic stainless steel or other material of adequate corrosion resistance. The centrifugal pump seals and the reciprocating pump stuffing box are provided with leakoffs to collect the leakage before it can leak to the atmosphere. The reciprocating pump design prevents lubricating oil from contaminating the charging flow. There is a minimum flow recirculation line to protect the centrifugal charging pumps from a closed discharge valve condition.

Charging flow rate is determined from a pressurizer level signal. The means of flow control for the reciprocating pump is by variation of pump speed. The reciprocating charging pump is also used to hydrotest the RCS. When operating a centrifugal charging pump, the flow paths remain the same but charging flow control is accomplished by a modulating valve on the discharge side of the centrifugal pumps. The centrifugal charging pumps also serve as high head safety injection pumps in the emergency core cooling system. A description of the centrifugal charging pump function upon receipt of a safety injection signal is given in Subsection 6.3.2.2.

Boric Acid Transfer Pumps

Three motor-driven, single speed pumps are supplied to serve both units. Normally one pump is aligned with the boric acid

tank for each unit and starts automatically on demand from the corresponding reactor makeup control system. Miniflow from these pumps flows back to the boric acid tank and helps maintain thermal equilibrium. The third (common) pump is considered a standby pump which can operate once the pump power supply is connected to the desired unit. Emergency boration, the supplying of at least 30 gpm of 4 wt. % boric acid solution to the suction of the charging pumps, can be accomplished by manually starting a boric acid pump. This function represents the nuclear safety requirement of the pumps. The pump parameters in Table 9.3-3 are not necessarily representative of actual system performance of the pumps, but rather the nominal values for pump performance. The transfer pumps also function to transfer 4 wt. % boric acid solution from the batching tank to the boric acid tanks.

The pumps are located in a heated area to prevent crystallization of the boric acid solution. All parts in contact with the solution are of austenitic stainless steel.

Chiller Pumps

The centrifugal pumps circulate the water through the chilled water loop in the boron thermal regeneration system. Three centrifugal chiller pumps, which are shared for two units, are provided.

Regenerative Heat Exchanger

The regenerative heat exchanger is designed to recover heat from the letdown flow by reheating the charging flow, which reduces thermal effects on the charging penetrations into the reactor coolant loop piping.

The letdown stream flows through the shell of the regenerative heat exchanger and the charging stream flow through the tubes. The unit is constructed of austenitic stainless steel, and is of all welded construction.

The temperatures of both outlet streams from the heat exchanger are monitored with indication given in the control room. A high temperature alarm is actuated on the main control board if the temperature of the letdown stream exceeds desired limits.

A second regenerative heat exchanger with its associated piping and valving is provided as an installed maintenance spare.

Letdown Heat Exchanger

The letdown heat exchanger cools the letdown stream to the operating temperature of the mixed bed demineralizers. Reactor coolant flows through the tube side of the exchanger while component cooling water flow through the shell side. All surfaces in contact with the reactor coolant are austenitic stainless steel, and the shell is carbon steel.

The low pressure letdown valve, located downstream of the heat exchanger, maintains the pressure of the letdown flow upstream

of the heat exchanger in a range sufficiently high to prevent two phase flow. Pressure indication and high pressure alarm are provided on the main control board.

The letdown temperature control indicates and controls the temperature of the letdown flow exiting from the letdown heat exchanger. A temperature sensor, which is part of the CVCS, provides input to the controller in the component cooling system. The exit temperature of the letdown stream is thus controlled by regulating the component cooling water flow through the letdown heat exchanger. Temperature indication is provided locally and on the main control board. If the outlet temperature from the heat exchanger is excessive, a high temperature alarm is actuated and a temperature controlled valve diverts the letdown directly to the volume control tank.

The outlet temperature from the shell side of the heat exchanger is allowed to vary over an acceptable range compatible with the equipment design parameters and required performance of the heat exchanger in reducing letdown stream temperature.

A second letdown heat exchanger with its associated piping and valving is provided as an installed maintenance spare. However, this heat exchanger may be operated in parallel with the other letdown heat exchanger.

Excess Letdown Heat Exchanger

The excess letdown heat exchanger cools reactor coolant letdown flow. This letdown flow rate is equivalent to the portion of the nominal seal injection flow which flows into the RCS through the reactor coolant pump labyrinth seals.

The excess letdown heat exchanger can be employed either when normal letdown is temporarily out of service to maintain the reactor in operation or it can be used to supplement maximum letdown during the final stages of RCS heatup. The letdown flows through the tube side of the unit and component cooling water is circulated through the shell. All surfaces in contact with reactor coolant are austenitic stainless steel and the shell is carbon steel. All tube joints are welded.

A temperature detector measures the temperature of the excess letdown flow downstream of the excess letdown heat exchanger. Temperature indication and high temperature alarm are provided on the main control board.

A pressure sensor indicates the pressure of the excess letdown flow downstream of the excess letdown heat exchanger and excess letdown control valve. Pressure indication is provided on the main control board.

A second excess letdown heat exchanger with its associated piping and valving is provided as an installed maintenance spare.

Seal Water Heat Exchanger

The seal water heat exchanger is designed to cool fluid from three sources: reactor coolant pump number 1 seal leakage, reactor coolant discharged from the excess letdown heat exchanger, and miniflow from a centrifugal charging pump. Reactor coolant flows through the tube side of the heat exchanger and component cooling water is circulated through the shell. The design flow rate through the tube side is equal to the sum of the nominal excess letdown flow, maximum design reactor coolant pump seal leakage, and miniflow from one centrifugal charging pump. The unit is designed to cool the above flow to the temperature normally maintained in the volume control tank. All surfaces in contact with reactor coolant are austenitic stainless steel and the shell is carbon steel.

Moderating Heat Exchanger

The moderating heat exchanger operates as a regenerative heat exchanger between incoming and outgoing streams to and from the thermal regeneration demineralizers.

The incoming letdown flow enters the tube side of the moderating heat exchanger. The shell side fluid, which comes directly from the thermal regeneration demineralizers, enters at low temperature during boron storage and high temperature during boron release.

Letdown Chiller Heat Exchanger

During the boron storage operation, the process stream enters the tube side of the letdown chiller heat exchanger after leaving the tube side of the moderating heat exchanger. The letdown chiller heat exchanger cools the process stream to allow the thermal regeneration demineralizers to remove boron from the coolant. The desired cooling capacity is adjusted by controlling the chilled water flow rate passed through the shell side of the heat exchanger.

The letdown chiller heat exchanger is also used during the boron release operation to cool the liquid leaving the thermal regeneration demineralizers to ensure that its temperature does not exceed that of normal letdown to the volume control tank.

Letdown Reheat Heat Exchanger

The letdown reheat heat exchanger is used only during boron release operations and it is then used to heat the process stream. Water used for heating is diverted from the letdown line upstream of the letdown heat exchanger, passed through the tube side of the letdown reheat heat exchanger and then returned to the letdown stream upstream of the letdown heat exchanger.

Volume Control Tank

The volume control tank provides surge capacity for part of the reactor coolant expansion volume not accommodated by the pressurizer. When the level in the tank reaches the high level setpoint, the remainder of the expansion volume is accommodated by diversion of the letdown stream to the boron recycle system. The tank also provides a means for introducing hydrogen into the reactor coolant to maintain the required equilibrium concentration of 25 to 50 cc hydrogen (at STP) per kilogram of water and is used for degassing the reactor coolant. It also serves as a head tank for the charging pumps.

A spray nozzle located inside the tank on the letdown line provides liquid to gas contact between the incoming fluid and the hydrogen atmosphere in the tank.

Hydrogen (from the hydrogen manifold in the gaseous waste processing system) is continuously supplied to the volume control tank to maintain an overpressure between 15 and 20 psig. During normal plant operations, however, certain plant evolutions or conditions may require RCS dissolved hydrogen concentration to be increased to no greater than 50 cc/Kg H_2O, to achieve an increase in RCS dissolved hydrogen, volume control tank pressure may be raised to approximately 30 psig. Relief protection, gas space sampling, and nitrogen purge connections are also provided. The tank can also accept the seal water return flow from the reactor coolant pumps although this flow normally goes directly to the suction of the charging pumps.

Volume control tank pressure is monitored with indication given in the control room. An alarm is actuated in the control room for high and low pressure conditions. The volume control tank pressure is controlled by an inlet pressure regulator, sensing downstream pressure, an outlet pressure controller sensing upstream pressure, and actuated by a manual valve.

Two level channels govern the water inventory in the volume control tank. Level indication with a high and low alarm is provided on the main control board for one channel and local level indication with a high, high-high and low alarm on the main control board are provided for the other channel.

If the volume control tank level rises above the normal operating range, one level channel provides an analog signal to the proportional controller which modulates the three-way valve downstream of the reactor coolant filter to maintain the volume control tank level within the normal operating band. The three-way valve can split letdown flow so that a portion goes to the boron recycle system and a portion to the volume control tank. The controller may operate in this fashion during a dilution operation when reactor makeup water is being fed to the volume control tank from the reactor makeup control system.

If the modulating function of the channel fails and the volume control tank level continues to rise, the high-high level alarm will

alert the operator to the malfunction and the full letdown flow will be automatically diverted by the backup level channel.

During normal power operation, a low level in the volume control tank initiates auto makeup which injects a preselected blend of boric acid solution and reactor makeup water into the charging pump suction header. When the volume control tank level is restored to normal, auto makeup stops.

If the automatic makeup fails or is not aligned for operation and the tank level continues to decrease, a low level alarm is actuated. Manual action may correct the situation or, if the level continues to decrease, a low-low signal from both level channels opens to stop valves in the refueling water supply line, and closes the stop valves in the volume control tank outlet line.

Boric Acid Tanks

Each boric acid tank is sized to store sufficient boric acid solution for refueling plus enough for a cold shutdown from full power operation immediately following refueling with the most reactive control rod not inserted. The two boric acid tanks are shared between Units 1 and 2.

The concentration of boric acid solution in storage is maintained between 4% and 4.4% by weight. Periodic manual sampling and corrective action, if necessary, assure that these limits are maintained. A density indicator is available for determining tank boron concentration by placing a boric acid transfer pump in operation through recirculation flow. However at Braidwood, the density indication is not used. As a consequence, measured amounts of boric acid solution can be delivered to the reactor coolant to control the boron concentration.

A temperature sensor provides temperature measurement of each tank's contents. Temperature indication as well as high and low temperature alarms are provided on the main control board.

Two level detectors indicate the level in each boric acid tank. Level indication with high, low, low-low and empty level alarms is provided on the main control board. The high alarm indicates that the tank may soon overflow. The low alarm warns the operator to start makeup to the tank. The low-low alarm is set to indicate the minimum level of boric acid in the tank to ensure sufficient boric acid is available for a cold shutdown with one stuck rod. The empty level alarm is set to give warning of loss of pump suction.

Batching Tank and Agitator

The batching tank is used for mixing a makeup supply of boric acid solution for transfer to the boric acid tanks. One batching tank is shared between Units 1 and 2.

A local sampling point is provided for verifying the solution concentration prior to transferring it out of the tank. The tank is provided with an agitator to improve mixing during batching operations and a steam jacket for heating the boric acid solution.

Chemical Mixing Tank

The primary use of the chemical mixing tank is in the preparation of caustic solutions for pH control and hydrazine solution for oxygen scavenging.

Chiller Surge Tank

The chiller surge tank handles the thermal expansion and contraction of the water in the chiller loop. The surge volume in the tank also acts as a thermal buffer for the chiller. The fluid level in the tank is monitored with level indication and high and low level alarms provided on the main control board.

Mixed Bed Demineralizers

Two flushable mixed bed demineralizers assist in maintaining reactor coolant purity. These vessels can contain a variety of resin mixtures during power operation and shutdown conditions, depending on the intended application. During power operation, a bed containing lithium-7-form cation resin and hydroxyl-form anion resin is normally in service. The anion resin is converted to the borate form prior to the vessel being placed in service. The mixed bed vessel can also contain hydrogen-form cation resin and hydroxyl-form anion resin to be used just prior to and during shutdown. At Byron, mixed bed vessels may also contain all hydroxyl-form anion resin for the purpose of end-of-cycle deboration. At Braidwood, mixed bed vessels may also contain all hydroxyl-form anion resin or a mixture of anion and cation resin for the purpose of deboration. The resin bed is designed to reduce the concentration of ionic isotopes in the purification stream, except for cesium, yttrium, and molybdenum, by a minimum factor of 10.

Each demineralizer has more than sufficient capacity for one core cycle with one percent of the rated core thermal power being generated by defective fuel rods. One demineralizer is normally in service with the other in standby.

A temperature sensor monitors the temperature of the letdown flow downstream of the letdown heat exchanger and if the letdown temperature exceeds the maximum allowable resin operating temperature (approximately 133°F), a three-way valve is automatically actuated to bypass the flow around the demineralizers. Temperature indication and high alarm are provided on the main control board. The air-operated three-way valve failure mode directs flow to the volume control tank.

Cation Bed Demineralizers

A flushable demineralizer with cation resin in the hydrogen form is located downstream of the mixed bed demineralizers and is used intermittently to control the concentration of Li^7 which builds up in the coolant from the B^{10} (n,α) Li^7 reaction. The demineralizer also has sufficient capacity to maintain the Cesium-137 concentration in the coolant below 1.0

μCi/cc with 1% defective fuel. The resin bed is designed to reduce the concentration of ionic isotopes, particularly cesium, yttrium, and molybdenum by a minimum factor of 10.

The demineralizer has more than sufficient capacity for one core cycle with 1% of the rated core thermal power being generated by defective fuel rods.

Thermal Regeneration Demineralizers

The function of the thermal regeneration demineralizers is to store the total amount of boron that must be removed from the RCS to accomplish the required dilution during a load cycle in order to compensate for xenon buildup resulting from a decreased power level. Furthermore, the demineralizers must be able to release the previously stored boron to accomplish the required boration of the reactor coolant during the load cycle in order to compensate for a decrease in xenon concentration resulting from an increased power level.

The thermally reversible ion storage capacity of the resin applies only to borate ions. The capacity of the resin to store other ions is not thermally reversible. Thus, during boration, when borate ions are released by the resin, there is no corresponding release of the ionic fission and corrosion products stored on the resin.

The thermal regeneration demineralizer resin capacity is directly proportional to the solution boron concentration and inversely proportional to the temperature. Further, the differences in capacity as a function of both boron concentration and temperature are reversible. For the 50°F to 140°F temperature cycle this reversible capacity varies from the beginning of a core cycle to the end of core life by a factor of about 2.

The demineralizers are of the type that can accept flow in either direction. The flow direction during boron storage is therefore always opposite to that during release. This provides much faster response when the beds are switched from storage to release and vice versa, than would be the case if the demineralizers could accept flow in only one direction.

Temperature instrumentation is provided upstream of the thermal regeneration demineralizers to control the temperature of the process flow. During boron storage operations it controls the flow through the shell side of the letdown chiller heat exchanger to maintain the process flow at 50°F as it enters the demineralizers. During boron release operations, it controls the flow through the tube side of the letdown reheat heat exchanger to maintain the process flow at 140°F as it enters the demineralizers. Temperature indication and a high temperature alarm are provided on the main control board.

An additional temperature instrument is provided to protect the demineralizer resins from a high temperature condition. On reaching the high temperature setpoint, an alarm is sounded on the main control board and the letdown flow is diverted to the volume control tank from a point upstream of the mixed bed demineralizers.

Failure of the temperature controls resulting in hot water flow to the demineralizers would result in a release of boron stored on the resin with a resulting increase in reactor coolant boron concentration and increased margin for shutdown. If the temperature of the resin rises significantly above 140°F, the amount of ion storage will gradually decrease, thus reducing the capability of the resin to remove boron from the process stream during the dilution mode.

Degradation of ion removal capability will occur for temperatures of approximately 160°F and above. The extent of the degradation and rate at which it will occur depend upon the temperature experienced by the resin and the length of time that the resin experiences this elevated temperature.

Failure of the temperature control system resulting in cold water flow to the demineralizers would result in storage of boron on the resin and reduction of the reactor coolant boron concentration. The amount of reduction in reactor coolant boron concentration is limited by the capacity of the resin to remove boron from the water. As the boron concentration is reduced, the control rods would be driven into the core to maintain power level. If the rods were to reach the shutdown limit setpoint, an alarm would be actuated informing the operator that boration of the RCS is necessary in order to maintain capability of shutting the reactor down with control rods alone.

Reactor Coolant Filter

The reactor coolant filter is located in the letdown line upstream of the volume control tank. The filter collects resin fines and particulates from the letdown stream. The nominal flow capacity of the filter is greater than or equal to the maximum purification flow rate.

Two local pressure indicators are provided to show the pressure upstream and downstream of the reactor coolant filter and thus provide filter differential pressure.

Seal Water Injection Filters

Two seal water injection filters are located in parallel in a common line to the reactor coolant pump seals; they collect particulate matter that could be harmful to the seal faces. Each filter is sized to accept flow in excess of the normal seal water flow requirements.

A differential pressure indicator monitors the pressure drop across each seal water injection filter and gives local indication with high differential pressure alarm on the main control board.

Seal Water Return Filter

This filter collects particulates from the reactor coolant pump seal water return and from the excess letdown flow. The filter is designed to pass the sum of the excess letdown flow, the maximum design leakage from all reactor coolant pumps, and the charging pump miniflow.

Two local pressure indicators are provided to show the pressures upstream and downstream of the filter and thus provide differential pressure across the filter.

Boric Acid Filter

The boric acid filter collects particulates from the boric acid solution being pumped from the boric acid tanks by the boric acid transfer pumps. The filter is designed to pass the design flow of two boric acid transfer pumps operating simultaneously.

Two boric acid filters are provided which are shared between Units 1 and 2.

Local pressure indicators indicate the pressure upstream and downstream of the boric acid filter and thus provide filter differential pressure.

Letdown Orifices

Three letdown orifices are provided to reduce the letdown pressure from reactor conditions and to control the flow of reactor coolant leaving the RCS. The orifices are placed into or out of service by remote operation of their respective isolation valves. One or more orifices may be used in parallel for flow control at all operational RCS pressures and as required for RCS purification. Each orifice consists of an assembly which provides for permanent pressure loss without recovery, and is made of austenitic stainless steel or other adequate corrosion resistant material.

A flow monitor provides indication in the control room of the letdown flow rate, and a high alarm to indicate unusually high flow.

A low pressure letdown controller located downstream of the letdown heat exchanger controls the pressure upstream of the

letdown heat exchanger to prevent flashing of the letdown liquid. Pressure indication and high pressure alarm are provided on the main control board.

Number 1 Seal Bypass Orifice

An orifice in each reactor coolant pump number 1 seal bypass line is only in service during startup or shutdown when the RCS pressure is low. The bypass flow is necessary to ensure adequate flow for cooling of the pump's lower radial bearing and to limit the temperature rise of the water cooling the number 1 seal. The orifice is constructed of austenitic stainless steel and designed to pass adequate flow for the differential pressure existing at the lowest allowable RCS pressure for reactor coolant pump operation.

Boric Acid Transfer Pump Bypass Orifices

Each boric acid pump orifice is designed to pass the minimum flow required to allow recirculating of the piping and tanks with the transfer pumps.

Chiller

The chiller is located in a chilled water loop containing a surge tank, chiller pumps, the letdown chiller heat exchanger, piping, valves, and controls.

The purpose of the chiller is two fold:

a. to cool down the process stream during storage of boron on the resin, and

b. to maintain an outlet temperature from the boron thermal regeneration system at or below 115°F during release of boron.

Boric Acid Blender

The boric acid blender is provided to ensure thorough mixing of the 4 wt. % solution of boric acid and reactor makeup water when required. The blender consists of a conventional piece of pipe fitted with a perforated tube insert.

Valves

Where pressure and temperature conditions permit, bellows-sealed and diaphragm type valves are used to essentially eliminate leakage to the atmosphere. All packed valves which are larger than 2 inches and which are designated for radioactive service are provided with a stuffing box and lantern leakoff connections. All control (modulating) and three-way valves are either provided with stuffing box and leakoff connections or are totally enclosed. Leakage to the atmosphere is essentially zero for

these valves. Basic material of construction is stainless steel for all valves which handle radioactive liquid or boric acid solutions.

Relief valves are provided for lines and components that might be pressurized above design pressure by improper operation or component malfunction.

a. Charging Line Downstream of Regenerative Heat Exchanger

If the charging side of the regenerative heat exchanger is isolated while the hot letdown flow continues at its maximum rate, the volumetric expansion of coolant on the charging side of the heat exchanger is relieved to the RCS through a spring loaded check valve.

b. Letdown Line Downstream of Letdown Orifices

The pressure relief valve downstream of the letdown orifices protects the low pressure piping and the letdown heat exchanger from overpressure when the low pressure piping is isolated. The capacity of the relief valve is equal to the maximum flow rate through all letdown orifices. The valve set pressure is equal to the design pressure of the letdown heat exchanger tube side.

c. Letdown Line Downstream of Low Pressure Letdown Valve

The pressure relief valve downstream of the low pressure letdown valve protects the low pressure piping and equipment from overpressure when this section of the system is isolated. The overpressure may result from leakage through the low pressure letdown valve. The capacity of the relief valve exceeds the maximum flow rate through all letdown orifices. The valve set pressure is selected to prevent components downstream from experiencing pressures exceeding 300 psig. The set pressure is lower to allow for elevation differences.

d. Volume Control Tank

The safety/relief valve on the volume control tank permits the tank to be designed for a lower pressure than the upstream equipment. This valve has a capacity greater than the summation of the following items: maximum letdown, normal seal water return, excess letdown, and nominal flow from one reactor makeup water pump. The valve set pressure equals the design pressure of the volume control tank.

e. Charging Pump Suction

A relief valve on the charging pump suction header relieves pressure that may build up if the suction line isolation valves are closed or if the system is overpressurized. The valve set pressure is set slightly above the residual heat removal pump discharge pressure.

f. Charging Pump Discharge

The pressure relief valve on the positive displacement charging pump discharge line relieves the rate pumping capacity if the pump is started with the discharge isolation valve closed. The set pressure of the valve equals the design pressure of the pump discharge piping.

g. Seal Water Return Line (Inside Containment)

This relief valve is designed to relieve overpressurization in the seal water return piping inside the containment if the motor-operated isolation valve is closed. The valve is designed to relieve the total leakoff flow from the number 1 seals of the reactor coolant pumps plus the design excess letdown flow. The valve is set to relieve at the design pressure of the piping.

h. Seal Water Return Line (Charging Pumps Bypass Flow)

This relief valve protects the seal water heat exchanger and its associated piping from overpressurization. If either of the isolation valves for the heat exchanger are closed and if the bypass line is closed, the piping would be overpressurized by the miniflow from the centrifugal charging pumps. The valve is sized to handle the miniflow from the centrifugal charging pumps. The valve is set to relieve at the design pressure of the heat exchanger.

i Letdown Reheat Heat Exchanger

The relief valve is located on the piping leading from the shell side of the heat exchanger. If the shell side were isolated while flow was maintained in the tube side, overpressurization could occur. The valve is set to relieve at the design pressure of the heat exchanger shell side.

j. Letdown Chiller Heat Exchanger

The relief valve is located on the piping leading from the shell side of the heat exchanger. If the shell side were isolated while flow was maintained in the tube side, overpressurization could occur. The valve is set to relieve at the design pressure of the heat exchanger shell side.

k. Steamline to Batching Tank

The relief valve on the steamline to the batching tank protects the low pressure piping and batching tank heating jacket from overpressure when the condensate return line is isolated. The capacity of the relief valve equals the maximum expected steam inlet flow. The set pressure equals the design pressure of the heating jacket.

Piping

All CVCS piping that handles radioactive liquid is austenitic stainless steel. All piping joints and connections are welded, except where flanged connections are required to facilitate equipment removal for maintenance and hydrostatic testing.

9.3.4.1.2.6 System Operation

Reactor Startup

Reactor startup is defined as the operations which bring the reactor from cold shutdown to normal operating temperature and pressure.

It is assumed that:

a. Normal residual heat removal is in progress.

b. RCS boron concentration is at the cold shutdown concentration.

c. Reactor makeup control system is set to provide makeup at the cold shutdown concentration.

d. RCS is either water solid or drained to minimum level for the purpose of refueling or maintenance. If the RCS is water solid, system pressure is maintained by operation of a charging pump and controlled by the low pressure letdown valve in the letdown line (letdown is achieved via the residual heat removal system).

e. The charging and letdown lines of the CVCS are filled with coolant at the cold shutdown boron

concentration. The letdown orifice isolation valves are closed.

If the RCS requires filling and venting, the procedure is as follows:

a. One charging pump is started, which provides blended flow at the cold shutdown boron concentration from the volume control tank with makeup from the reactor makeup control system.

b. The vents on the head of the reactor vessel and pressurizer are opened.

c. The RCS is filled and the vents closed.

The system pressure is raised by using the charging pump and controlled by the low pressure letdown valve. When the system pressure is adequate for operation of the reactor coolant pumps, seal water flow to the pumps is established and the pumps are operated and vented until all gases are cleared from the system. Final venting takes place at the pressurizer.

An alternate method for filling the RCS can be implemented.

With the plant in Mode 5 or 6, the RCS loops isolated (the loop stop isolation valves, LSIVs, closed), and sensitive instrumentation isolated, a vacuum is reached, this loop is filled via the RCS loop fill line from the charging pumps. After all RCS loops are vacuum filled, each loop is returned to service by opening the Cold Leg and Hot Leg LSIVs.

Next, a vacuum is drawn on the pressurizer. After a target vacuum is reached, the vacuum equipment is isolated, an RH train is placed in shutdown cooling, letdown is aligned to the stand-by RH train, and the pressurizer back-up heaters are energized to draw a pressurizer bubble. At about 50 psig, the reactor vessel head is vented; when the RCS pressure is adequate, an RCP can be started.

After the filling and venting operations are completed, charging and letdown flows are established. All pressurizer heaters are energized and the reactor coolant pumps are employed to heat up the system. After the reactor coolant pumps are started, the residual heat removal pumps may be stopped and pressure control via the residual heat removal system (RHRS) and the low pressure letdown line may be continued as the pressurizer steam bubble is formed. At this point, level control in the pressurizer is accomplished by manual control of the charging flow and automatic pressure control of the letdown flow. When the pressurizer water level reaches the no-load programmed setpoint, the pressurizer level control is shifted to control the charging flow to maintain programmed level.

When appropriate the RHRS is then isolated from the RCS and the normal letdown path is established. The pressurizer heaters are now used to increase RCS pressure.

The reactor coolant boron concentration is now reduced either by operating the reactor makeup control system in the "dilute" mode or by operating the boron thermal regeneration system in the boron storage mode and, when the resin beds are saturated, washing off the beds to the boron recycle system. The reactor coolant boron concentration is corrected to the point where the control rods may be withdrawn and criticality achieved. Nuclear heatup may then proceed with corresponding manual adjustment of the reactor coolant boron concentration to balance the temperature coefficient effects and maintain the control rods within their operating range. During heatup, the appropriate combination of letdown orifices is used to provide necessary letdown flow.

Prior to or during the heating process, the CVCS is employed to obtain the correct chemical properties in the RCS. The reactor makeup control system is operated on a continuing basis to ensure correct control rod position. Chemicals are added through the chemical mixing tank as required to control reactor coolant chemistry such as pH and dissolved oxygen content. Hydrogen overpressure is established in the volume control tank to assure the appropriate hydrogen concentration in the reactor coolant.

Power Generation and Hot Standby Operation

Base Load

At a constant power level, the rates of charging and letdown are dictated by the requirements for seal water to the reactor coolant pumps and the normal purification of the RCS. One charging pump is normally employed and charging flow is controlled automatically from pressurizer level. The only adjustments in boron concentration necessary are those to compensate for core burnup. These adjustments are made at infrequent intervals to maintain the control groups within their allowable limits. Rapid variations in power demand are accommodated automatically by control rod movement. If variations in power level occur, and the new power level is sustained for long periods, some adjustment in boron concentration may be necessary to maintain the control groups within their maneuvering band.

During normal operation, normal letdown flow is maintained and one mixed bed demineralizer is in service. Reactor coolant samples are taken periodically to check boron concentration, water quality, pH, and activity level. The charging flow to the RCS is controlled automatically by the pressurizer level control signal through the discharge header flow control valve or the positive displacement pump speed controller.

Load Follow

A power reduction will initially cause a xenon buildup followed by xenon decay to a new, lower equilibrium value. The reverse occurs if the power level increases; initially, the xenon level decreases and then it increases to a new and higher equilibrium value associated with the amount of the power level change.

The boron thermal regeneration system is normally used to vary the reactor coolant boron concentration to compensate for xenon transients occurring when reactor power level is changed. The reactor makeup control system may also be used to vary the boron concentration in the reactor coolant.

The most important intelligence available to the plant operator, enabling him to determine whether dilution or boration of the RCS is necessary, is the position of the control rods. For

example, if the control rods are below their desired position, the operator must borate the reactor coolant to bring the rods outward. If, on the other hand, the control rods are above their desired position, the operator must dilute the reactor coolant to bring the rods inward.

During periods of plant loading, the reactor coolant expands as its temperature rises. The pressurizer absorbs this expansion as the level controller raises the level setpoint to the increased level associated with the new power level. The excess coolant due to RCS expansion is let down and stored in the volume control tank. During this period, the flow through the letdown orifice remains constant and the charging flow is reduced by the pressurizer level control signal, resulting in an increased temperature at the regenerative heat exchanger outlet. The temperature controller downstream from the letdown heat exchanger increases the component cooling water flow to maintain the desired letdown temperature.

During periods of plant unloading, the charging flow is increased to make up for the coolant contraction not accommodated by the programmed reduction in pressurizer level.

Hot Shutdown

If required, for periods of maintenance, or following spurious reactor trips, the reactor can be held subcritical, but with the capability to return to full power within the period of time it takes to withdraw control rods. During this hot shutdown period, temperature is maintained at no-load T_{avg} by initially dumping steam to remove core residual heat, or at later stages, by running reactor coolant pumps to maintain system temperature.

Following shutdown, xenon buildup occurs and increases the degree of shutdown; i.e., initially, with initial xenon concentration and all control rods inserted, the core is maintained at a minimum of 1% $\Delta k/k$ subcritical. The effect of xenon buildup is to increase this value to a minimum of about 4% $\Delta k/k$ at about 8 hours following shutdown from equilibrium full power conditions. If rapid return to power is expected during this period of increasing xenon, dilution will be required to counteract the xenon buildup. If hot shutdown is maintained past this point, xenon decay results in a decrease in degree of shutdown. Since the value of the initial xenon concentration is about 3% $\Delta k/k$ (assuming that an equilibrium concentration had been reached during operation), boration of the reactor coolant may be necessary to counteract the xenon decay and maintain shutdown.

Cold Shutdown

Cold shutdown is the operation which takes the reactor from hot shutdown conditions to cold shutdown conditions (reactor is subcritical by at least 1% $\Delta k/k$ and $T_{avg} \leq 200°F$).

Before initiating a cold shutdown for maintenance, where degassing is required, the RCS hydrogen concentration is lowered by reducing the volume control tank overpressure, and by replacing the volume control tank hydrogen atmosphere with nitrogen.

Before cooldown and depressurization of the reactor plant is initiated, the reactor coolant boron concentration is increased, if necessary to the cold shutdown value. After the boration is completed and reactor coolant samples verify that the concentration is correct, the operator resets the reactor makeup control system for leakage makeup and system contraction at the shutdown reactor coolant boron concentration.

Contraction of the coolant during cooldown of the RCS results in actuation of the pressurizer level control to maintain normal pressurizer water level. The charging flow is increased, relative to letdown flow, and results in a decreasing volume control tank level. The volume control tank level controller automatically initiates makeup to maintain the inventory.

After the RHRS is placed in service and the reactor coolant pumps are shut down, further cooling of the pressurizer liquid is accomplished by charging through the auxiliary spray line. Coincident with plant cooldown, a portion of the reactor coolant flow is diverted from the RHRS to the CVCS for cleanup. Demineralization of ionic radioactive impurities and stripping of fission gases reduce the reactor coolant activity level sufficiently to permit personnel access for refueling or maintenance operations.

9.3.4.1.3 Safety Evaluation

The classification of structures, components and systems is presented in Section 3.2. A further discussion on seismic design categories is given in Section 3.7. Conformance with NRC General Design Criteria for the plant systems, components and structures important to safety is presented in Section 3.1. Also, Appendix A provides a discussion on applicable regulatory guides.

9.3.4.1.3.1 Reactivity Control

Any time that the plant is at power, the quantity of boric acid retained and ready for injection always exceeds that quantity required for the normal cold shutdown assuming that the control assembly of greatest worth is in its fully withdrawn position.

This quantity always exceeds the quantity of boric acid required to bring the reactor to hot shutdown and to compensate for subsequent xenon decay. An adequate quantity of boric acid is also available in the refueling water storage tank to achieve cold shutdown.

When the reactor is subcritical, i.e., during cold or hot shutdown, refueling and approach to criticality, the neutron source multiplication is continuously monitored and indicated. Any appreciable increase in the neutron source multiplication, including that caused by the maximum physical boron dilution rate, is slow enough to give ample time to start a corrective action to prevent the core from becoming critical. A "Boron Dilution Alert" alarm(s) is (are) initiated in the main control room upon detection of source range neutron flux-doubling, VCT high level, or CV112A divert valve not in VCT position, to alert an operator to the potential of a boron dilution transient (the boron dilution accident is discussed in Subsection 15.4.6). The rate of boration, with a single boric acid transfer pump operating, is sufficient to take the reactor from full power operation to 1% shutdown in the hot condition, with no rods inserted, in approximately 90 minutes. In approximately 120 additional minutes, enough boric acid can be injected to compensate for xenon decay, although xenon decay below the equilibrium operating level will not begin until approximately 25 hours after shutdown. Additional boric acid is employed if it is desired to bring the reactor to cold shutdown conditions.

Two flow paths are available for reactor coolant boration; i.e., the charging line and the reactor coolant pump seal injection line. A single failure does not result in the inability to borate the RCS.

If the normal charging line is not available, charging to the RCS is continued via reactor coolant pump seal injection at the rate of approximately 5 gpm per pump. At the charging rate of 20 gpm, approximately 5 hours are required to add enough boric acid solution to counteract xenon decay, although xenon decay below the full power equilibrium operating level will not begin until approximately 25 hours after the reactor is shut down.

As backup to the normal boric acid supply, the operator can align the refueling water storage tank outlet to the suction of the charging pumps.

Operating procedures verify that adequate boron injection flowpaths to the RCS are available from the boric acid tank and/or the refueling water storage tank (RWST). Borated water from the boric acid tank can be delivered to the charging pump via the unit specific or unit common boric acid transfer pump. In addition, redundant trains are available to deliver borated water from the RWST to the charging pump.

9.3.4.1.3.2 Reactor Coolant Purification

The CVCS is capable of reducing the concentration of ionic isotopes in the purification stream as required in the design basis. This is accomplished by passing the letdown flow through one of the mixed bed demineralizers which removes ionic isotopes, except those of cesium, molybdenum and yttrium, with a minimum decontamination factor of 10. Through occasional use of the cation bed demineralizer the concentration of cesium can be maintained below 1.0 µc/cc, assuming 1% of the rated core thermal power is being produced by fuel with defective cladding. The cation bed demineralizer is capable of passing the maximum purification letdown flow, through only a portion of this capacity is normally utilized. Each mixed bed demineralizer is capable of processing the maximum purification letdown flow rate. If the normally operating mixed bed demineralizer's resin has become exhausted, the second demineralizer can be placed in service. Each demineralizer is designed, however, to operate for one core cycle with 1% defective fuel.

A further cleanup feature is provided for use during residual heat removal operations. A remote-operated valve may be used to admit bypass flow from the RHRS into the letdown line at a point upstream of the letdown heat exchanger. The flow passes through the heat exchanger and then passes through one of the mixed bed demineralizers and the reactor coolant filter to the volume control tank. The fluid is then returned to the RCS via the normal charging route.

A portable, resin-fill tank is one method that can be utilized for resin replenishment. This tank can be employed for all the demineralizers in the auxiliary building and it is provided with reactor makeup water flushing connections for resin fluidization.

The maximum temperature that will be allowed for the mixed bed and cation bed demineralizers is approximately 140°F. If the temperature of the letdown stream approaches this level, the flow will be automatically diverted so as to bypass the demineralizers. If the letdown is not diverted, the only consequence would be a decrease in ion removal capability. Ion removal capability starts to decrease when the temperature of the resin goes above approximately 160°F for anion resin or above approximately 250°F for cation resin. The resins do not lose their exchange capability immediately. Ion exchange still takes place (at a faster rate) when temperature is increased. However, with increasing temperature, the resin loses some of its ion exchange sites along with the ions that are held at the lost sites. The ions lost from the sites may be reexchanged farther down the bed. The number of sites lost is a function of the temperature reached in the bed and of the time the bed remains at the high temperature. Capability for ion exchange will not be lost until a significant portion of the exchange sites are lost from the resin.

There would be no safety problem associated with over-heating of the demineralizer resins. The only effect on reactor operating conditions would be the possibility of an increase in the reactor coolant activity level. If the activity level in the reactor coolant were to exceed the limit given in the technical specifications, reactor operation would be restricted as required by the technical specifications.

9.3.4.1.3.3 Seal Water Injection

Flow to the reactor coolant pump seals is assured by the fact that there are three charging pumps, any one of which is capable of supplying the normal charging line flow plus the nominal seal water flow.

9.3.4.1.3.4 Hydrostatic Testing of Reactor Coolant System

The positive displacement pump can pressurize the RCS to its maximum specified hydrostatic test pressure. The pump is capable of producing a hydrostatic test pressure greater than that required.

9.3.4.1.3.5 Leakage Provisions

CVCS components, valves, and piping which see radioactive service are designed to limit leakage to the atmosphere. The following are preventive means which are provided to limit radioactive leakage to the environment.

a. Where pressure and temperature conditions permit, diaphragm type valves are used to essentially eliminate leakage to the atmosphere.

b. All packed valves which are larger than 2 inches and which are designated for radioactive service are provided with a stuffing box and lantern leakoff connections.

c. All control (modulating) and three-way valves are either provided with stuffing box and leakoff connections or are totally enclosed.

d. Welding of all piping joints and connections except where flanged connections are provided to facilitate maintenance and hydrostatic testing.

The volume control tank provides an inferential measurement of leakage from the CVCS as well as the RCS. The amount of leakage can be inferred from the amount of makeup added by the reactor makeup control system.

Two mixed-bed demineralizers are also provided to maintain reactor coolant purity, thus reducing the radioactivity level of the RCS water.

9.3.4.1.3.6 Ability to Meet the Safeguards Function

A failure analysis of the portion of the CVCS which is safety-related (used as part of the emergency core cooling system) is included as part of the emergency core cooling system failure analysis presented in Tables 6.3-5 and 6.3-6.

9.3.4.1.3.7 Heat Tracing

Heat tracing requirements for boric acid solutions depend mainly on the solution concentration and the ability to maintain room temperature sufficiently above the solubility point. For this plant the concentration of boric acid ranges from 10 ppm to 4 wt. % boric acid. Electrical heat tracing is not required on any CVCS components which contain 4 wt. % boric acid providing these components are located in a room maintained at 65°F or higher. Please refer to Subsection 9.3.4.1.2 for more information.

9.3.4.1.3.8 Abnormal Operation

The CVCS is capable of making up for a small RCS leak of approximately 130 gpm using one centrifugal charging pump and still maintaining seal injection flow to the reactor coolant pumps. This also allows for a minimum RCS cooldown contraction. This is accomplished with the letdown isolated.

9.3.4.1.3.9 Failure Mode and Effects Analysis

The CVCS provides a number of functions. Certain of these functions (such as automatic pressurizer level control, automatic makeup, purification, chemistry control, control of boron concentration for load follow, and reactor coolant pump (RCP) seal water injection) are supplied for normal plant operation purposes. These functions are not designed to the single-failure criterion, and failure of these functions, if not corrected, could result in operational restrictions or the reaching of operational limits requiring a plant shutdown.

The CVCS also provides safe shutdown functions of: (1) boration, and (2) makeup. The failure modes and effects analysis (FMEA) presented herein demonstrates that the single-failure criterion is met for these functions. In addition, the CVCS provides containment isolation functions, which are covered in Chapter 6.0.

Borated water can be supplied to the charging pump suction header via either of two sources as follows:

a. The primary source is the boric acid tanks, which contain 4 wt. % boric acid. Two tanks are provided in parallel, each with its own boric acid transfer pump. The discharge from these pumps is headered

and normally is delivered to the charging pump suction header via the two series valves, CV110A and 110B. Should this flow path be blocked for any reason, the operator will be alerted by the boric acid makeup flow deviation alarm.

An alternate emergency boration flow path from the discharge of the boric acid transfer pumps to the charging pump suction header is available by opening CV8104. This subsystem itself is seen to incorporate considerable redundancy of active components.

b. A totally independent source of borated water is the refueling water storage tank, containing 2300 ppm boron. This supply is available upon opening either CV112D or CV112E, which directly supply refueling water to the charging pump suction header. This source therefore incorporated redundancy of active components.

Three charging pumps are provided in parallel to deliver borated water to the RCS via the charging line and/or the seal water injection line. Failure of the operating charging pump is detectable by:

a. low charging pump discharge header pressure, PI-120;

b. low charging flowrate and alarm, FI-139;

c. Low seal water injection flow alarms, F-142, F-143, F-144, and F-145;

d. high letdown temperature alarm, T-127; or

e. low pressurizer level.

The operator can start an alternate charging pump to reestablish flow. Blockage of either the charging line or the seal water injection line is detectable by the respective low-flow alarms. This would reduce the rate of boration, but the alternate path remains available and provides an adequate flowrate.

In the event of a boric acid makeup fault during automatic makeup, there is potential to charge unborated water. The boric acid makeup control provides boric acid flow indications and flow deviations alarms to alert the operator, and automatic isolation of valve CV110B to terminate reactor water makeup. Additional indication of boron dilution results from the control rod position indication and low and low-low insertion limit alarms, which would provide the operator adequate time to

determine the cause of dilution and isolate the reactor water makeup source before shutdown margin is lost. The boron dilution accident is analyzed in Chapter 15.0.

Table 9.3-5 summarizes results of an FMEA on this system, demonstrating that single active component failures do not compromise safe shutdown functions of borations and makeup. Table 9.3-5 also shows that single failures occurring during CVCS operation do not compromise the ability to prevent or mitigate accidents. These capabilities are accomplished by a combination of suitable redundancy, instrumentation for indication and/or alarm of abnormal conditions, and relief valves to protect piping and components against malfunctions.

9.3.4.1.4 Tests and Inspections

Preoperational tests will be performed on the system. The equipment manufacturer's recommendations and station practices are considered in determining required maintenance.

9.3.4.1.5 Instrumentation Application

Process control instrumentation is provided to acquire data concerning key parameters about the CVCS. The location of the instrumentation is shown on Drawings M-64 and M-64A.

The instrumentation furnishes input signals for monitoring and/or alarming purposes. Indication and/or alarms are provided for the following parameters:

a. temperature,

b. pressure,

c. flow, and

d. water level.

The instrumentation also supplies input signals for control purposes. Some specific control functions are:

a. Letdown flow is diverted to the volume control tank upon high temperature indication upstream of the mixed bed demineralizers.

b. Pressure upstream of the letdown heat exchanger is controlled to prevent flashing of the letdown liquid.

c. Charging flow rate is controlled during charging pump operation.

d. Water level is controlled in the volume control tank.

e. Temperature of the boric acid solution in the batching tank is maintained.

f. Reactor makeup is controlled.

g. Temperature of letdown flow to the boron thermal regeneration system is controlled.

h. Temperature of the chilled water flow to the letdown chiller heat exchanger is controlled.

i. Temperature of letdown flow return from the boron thermal regeneration demineralizers is controlled.

9.3.4.2 Boron Recycle System

The boron recycle system (BRS) receives and recycles reactor coolant effluent for reuse of the boric acid and makeup water. The system decontaminates the effluent by means of demineralization and gas stripping, and uses evaporation to separate and recover the boric acid and makeup water.

The recycle evaporators are components in this system, and are no longer used for boric acid recovery. At Byron, the nonessential service water supply to parts of the recycle evaporator skid has been abandoned permanently.

9.3.4.2.1 Design Bases

9.3.4.2.1.1 Collection Requirements

The BRS collects and processes effluents which can be readily reused as makeup to the reactor coolant system (RCS). For the most part, this effluent is the deaerated, tritiated, borated, and radioactive water from the letdown and process drains.

The BRS is designed to collect, via the letdown line in the chemical and volume control system (CVCS), the excess reactor coolant that results from the following plant operations during one core cycle:

a. Dilution for core burnup from approximately 1200 ppm boron at the beginning of an annual core cycle to approximately 10 ppm near the end of the core cycle.

b. Hot shutdowns and startups - Four hot shutdowns are assumed to take place during an annual core cycle.

c. Cold shutdowns and startups - Three cold shutdowns are assumed to take place during an annual core cycle.

d. Refueling shutdown and startup.

The BRS also collects water from the following sources:

a. Reactor coolant drain tank (liquid waste processing system) - collects leakoff type drains from equipment inside the containment.

b. Volume control tank and charging pump suction pressure reliefs (CVCS) - provides a volume that can contain the radioactive water and gas from the CVCS which can be processed and recycled.

c. Boric acid blender (CVCS) - provides storage of boric acid if a boric acid tank must be emptied for maintenance. The boric acid solution is stored in a recycle holdup tank after first being diluted with reactor makeup water by the blender to ensure against precipitation of the boric acid in the unheated recycle holdup tank.

d. Safety injection system (SIS) - recycle hold-up tanks collect effluents resulting from leak testing of accumulator and SI reactor coolant system (RCS) boundary check valves.

e. Spent fuel pool pumps (spent fuel pool cooling and cleanup system) - provides a means of storing the fuel transfer canal water in case maintenance is required on the transfer equipment.

f. Valve leakoffs, equipment drains, and borated equipment tanks.

g. Recycle monitor tank (boron recycle system) - provides flexibility for recycling water from the recycle monitor tank should the contents require further processing.

9.3.4.2.1.2 Capacity Requirement

The BRS is designed to process the total volume of water collected during a core cycle as well as short-term surges. The design surge is that produced by a cold shutdown and subsequent startup during the latter part of a core cycle or by a refueling shutdown and startup.

9.3.4.2.1.3 Purification Requirement

The water collected by the BRS contains dissolved gases, boric acid, and suspended solids. Based on reactor operations with 1% of the rated core thermal power being generated by fuel elements with defective cladding, the BRS is designed to provide sufficient cleanup of the water to satisfy the chemistry requirements of the recycled reactor makeup water and 4 wt. % boric acid solution.

The maximum radioactivity concentration buildup in the BRS components is based on operation of the reactor at its engineered safeguards design rating with defective fuel rods generating 1% of the rated core thermal power. For each component, the shielding design considers the maximum buildup on an isotopic basis including only those isotopes which are present in significant amounts. Filtration, demineralization, and evaporation are the means by which the activity concentrations are controlled.

9.3.4.2.2 System Description

The BRS is shown in Drawing M-65 (piping and instrumentation diagram). The codes and standards to which the individual components of the BRS are designed are listed in Section 3.2. When water is directed to the BRS, the flow passes first through the recycle evaporator feed demineralizers and filters and then into the recycle holdup tanks. The recycle evaporator feed pumps can be used to transfer liquid from one recycle holdup tank to the other if desired. When sufficient water is accumulated to warrant evaporator operation, the recycle evaporator feed pumps take suction from the selected recycle holdup tank. The fluid then flows through the recycle evaporator. Here, dissolved gases (i.e., hydrogen, fission gases, and other gases) are removed in the stripping column before the liquid enters the evaporator shell. These gases are directed to the gaseous waste processing system. If recycle holdup tank inventory increases faster than the processing rate of the recycle evaporators, a bypass line exists which facilitates holdup tank liquid processing via the recycle evaporator condensate demineralizers.

Water is separated into boric acid (concentrate) and makeup water (condensate). The makeup water is passed through the recycle evaporator condensate demineralizer to limit the boron and anion concentration, then filtered by the recycle evaporator condensate filter, and flows to the recycle monitor tank. The contents of the monitor tank are sampled and evaluated to determine subsequent handling of the distillate. The distillate from the monitor tank may be pumped to the reactor makeup water (primary water) storage tank, recycled to the recycle holdup tanks or to the recycle evaporator condensate demineralizers, or discharged to the waste processing system. The boric acid (concentrated to 4%) flows through the recycle evaporator concentrates filter prior to storage in the boric acid tanks (CVCS). If the boric acid deviates from the required chemical standards, it can be diverted to the waste processing system and drummed for disposal or returned to the recycle holdup tanks.

All portions of the BRS which contain concentrated boric acid solution are located within a heated area in order to maintain solution temperature at ≥65°F. This is 10°F above the solubility limit for the nominal 4 wt. % boric acid solution. Heat tracing is provided as a backup to plant heating system.

9.3.4.2.2.1 Component Descriptions

A summary of principal component data is given in Table 9.3-4 and the code requirements are given in Subsection 3.2.1.1.

Recycle Evaporator Feed Pumps

Two centrifugal, canned pumps supply feed to the recycle evaporator package from the recycle holdup tanks. The pumps can also be used to recirculate water from the recycle holdup tanks through the recycle evaporator feed demineralizers for cleanup if desired. An auxiliary discharge connection is provided to return water to the transfer canal from the recycle holdup tanks, if those tanks were used for storage of transfer canal water during refueling equipment maintenance. Another auxiliary discharge connection is provided to supply water to the suction of the charging pumps.

Recycle Monitor Tank Pumps

Two monitor tank pumps take suction from the monitor tanks. The pumps are used to pump the monitor tank contents to either the reactor makeup water (primary water) storage tank, the recycle holdup tanks, or the waste processing system. The pumps also can be used to recirculate water between the recycle monitor tanks via the recycle evaporator condensate demineralizer. The pumps are centrifugal type; all surfaces in contact with the pumped fluid are austenitic stainless steel.

Recycle Holdup Tanks

Two recycle holdup tanks provide storage for excess reactor effluents for processing by the evaporator package.

Recycle Monitor Tanks

Two monitor tanks are provided to collect the distillate from the evaporators. The tanks are filled sequentially, then sampled prior to disposal of the contents either to the reactor makeup water storage tank, the recycle holdup tanks, or the waste processing system. These tanks can also be used for processing the contents of the recycle holdup tanks via the recycle evaporator condensate demineralizer.

Recycle Evaporator Feed Demineralizers

Two flushable, mixed bed demineralizers remove fission products from the fluid directed to the recycle holdup tanks. The demineralizers also provide a means of cleaning the recycle holdup tank contents via recirculation.

Recycle Evaporator Condensate Demineralizer

A flushable demineralizer is provided for polishing distillate from the recycle evaporator.

Although the bed may become saturated with boron at the normally low concentration (<10 ppm) leaving the evaporator, it will still remove boron if the concentration increases because of an evaporator upset. Additionally, the recycle evaporator condensate demineralizer is used to process the water in the recycle holdup tanks when this water is routed to the recycle monitor tanks.

Recycle Evaporator Feed Filters

Two cage assembly type recycle evaporator feed filters are aligned in parallel to collect resin fines and particulates from the fluid entering the recycle holdup tanks.

Recycle Evaporator Condensate Filter

This filter collects resin fines and particulate from the boric acid evaporator condensate stream prior to storage in the recycle monitor tank.

Recycle Evaporator Concentrates Filter

This filter removes particulates from the evaporator concentrate as it leaves the evaporator.

Recycle Evaporator

The recycle evaporator package processes dilute boric acid and produces distillate and approximately 4 wt. % boric acid stripped of dissolved gases.

A boric acid solution is fed from the recycle holdup tanks to the evaporator by the recycle evaporator feed pumps. The feed first passes through a heat exchanger where condensing steam raises its temperature. The feed then passes into the top of the stripping column. Gases are stripped off as the feed passes over the packing in the tower in contra flow to stripping steam from the evaporator. After stripping, the feed is introduced into the evaporator as makeup. The vapors leaving the boiling pool are stripped of entrained liquid and volatile boron carryover. Pure vapors are then condensed in the condenser section and pumped from the system. When the desired concentration is reached in the boiling pool, the concentrates are pumped from the system.

Radioactive gases, hydrogen, and other noncondensibles are discharged from the system into the waste gas vent header.

Valves

All valves are welded to the piping, except the three way and relief valves, which are flanged. All three-way valves are provided with a stuffing box and lantern leakoff connection.

Piping

All piping joints and connections are welded, except where flanged connections are required to facilitate equipment removal for maintenance and hydrostatic testing.

9.3.4.2.2.2 System Operation

The BRS is manually operated with the exception of a few automatic protection functions. These automatic functions protect the recycle evaporator feed demineralizers from a high inlet temperature and a high differential pressure. The monitor tank pumps trip on low tank level. The recycle evaporator will automatically shut down on high temperature due to a blown rupture disk, or high recycle evaporator pressure. The BRS has sufficient instrumentation readouts and alarms to provide the operator information to assure proper system operation.

Evaporation

Water is accumulated in the recycle holdup tank until sufficient quantity exists to warrant an evaporator startup. Prior to startup of the evaporator, the contents of the recycle holdup tank are analyzed and, if necessary, are recirculated through the recycle evaporator feed demineralizers and filter. The flow can be discharged back to the recycle holdup tank or to the evaporator. The evaporator is then operated to produce a batch of approximately 4 wt. % boric acid.

During the operation of the evaporator, condensate is sent to the reactor makeup water storage tank via the recycle evaporator condensate demineralizer and recycle monitor tanks.

After a batch of boric acid is concentrated to approximately 4 wt. %, (and transferred to the monitor tanks) it is analyzed to ensure that it is within specifications to reuse. If it meets the specifications, it is pumped to the boric acid tanks. If it does not, it can be returned to the recycle holdup tank via the recycle evaporator feed demineralizers for reevaporation or, if desired, the concentrated boric acid can be sent to the liquid waste processing system for disposal.

Recycle Holdup Tank Venting

Because hydrogen is dissolved in the reactor coolant at approximately one atmosphere over-pressure, a portion of the hydrogen along with fission gases will come out of solution in the recycle holdup tank. The hydrogen and fission gases are vented to the gaseous waste processing system as required.

Maintenance Drains

When large amounts of water must be drained from the RCS or the fuel storage area (or fuel transfer canal) to the BRS, a recycle holdup tank is drained of water. The water can then be stored in this tank until maintenance is completed and, after checking the chemistry, returned.

9.3.4.2.3 Safety Evaluation

Malfunctions in the BRS do not affect the safety of station operations. The BRS is designed to tolerate equipment faults with critical functions being met by the use of two pieces of equipment so that the failure of one will, at most, reduce the capacity of the BRS but not completely shut it down. Because of the large surge capacity of the BRS, the nonavailability of the recycle evaporator can be tolerated for periods of time.

9.3.4.2.4 Tests and Inspections

Preoperational tests were performed on the system. The equipment manufacturer's recommendations and station practices are considered in determining required maintenance.

9.3.4.2.5 Instrumentation Application

The instrumentation available for the BRS is discussed in the following. Alarms are provided as noted. There is also a common alarm on the main control board which indicates any alarms on the BRS panel.

9.3.4.2.5.1 Temperature

Temperature at Inlet to the Recycle Evaporator Feed Demineralizer

Instrumentation is provided to measure the temperature of the inlet flow to the recycle evaporator feed demineralizers and to control a three-way bypass valve. If the inlet temperature becomes too high, the instrumentation aligns the valve to bypass the demineralizers. Local temperature indication and a high temperature alarm on the BRS panel are provided by this instrumentation.

9.3.4.2.5.2 Pressure

Pressure Differential Across the Recycle Evaporator Feed Demineralizers

Instrumentation is provided to measure the pressure differential across the recycle evaporator feed demineralizers and to control the same three-way valve as discussed above (but independently of the temperature control). If the pressure

drop through the demineralizers is too high, this instrumentation aligns the valve to divert flow directly to the recycle evaporator feed filters. Local pressure differential indication and a high alarm on the BRS panel are provided in this instrumentation.

PIS-253 measures the pressure differential across the recycle evaporator feed demineralizer and controls three-way valve PCV250, which on high pressure diverts flow directly to the feed filter. Pressure differential indication and a high alarm are provided.

PI-278 provides indication of pressure at the recycle evaporator condensate demineralizer inlet.

Pressure at Inlet and Outlet of Filters

Instrumentation is provided to measure the pressure differential across each recycle evaporator feed filter, the recycle evaporator concentrates filter, and the recycle evaporator condensate filter. Local indication of the pressure in each inlet and outlet line is provided.

PI-268 A/B and PI-269 A/B are pressure indicators upstream and downstream of the recycle evaporator feed filters.

PI-271 A/B provides upstream/downstream pressure indication of the recycle evaporator concentrates filters.

PI-272 A/B provides upstream and downstream pressure indications for the recycle evaporator condensate filter.

Pressure at Discharge of Recycle Evaporator Feed Pump

Instrumentation is provided to measure and give local indication of the discharge pressure of each recycle evaporator feed pump.

Pressure in Vent Line from the Recycle Holdup Tanks

Instrumentation is provided to measure the pressure in the recycle holdup tank vent line. Pressure instrumentation is provided locally and on the boron recycle panel. A high pressure alarm is also provided on the boron recycle panel. At Byron, pressure is also indicated locally by a pressure gauge that taps off the tank level instrument line. This pressure gauge is used if the pressure indicator for the vent line is valved out and not available to measure tank pressure.

Recycle Monitor Tank Pump Discharge Pressure

These pressure indicators provide local indication of the discharge pressure of each recycle monitor tank pump.

9.3.4.2.5.3 Flow

Condensate Flow from Evaporator

This local flow indicator is provided to show the flow of condensate from the recycle evaporators to the recycle evaporator condensate demineralizer.

Flow in Feed Line to the Recycle Evaporator

Instrumentation is provided which gives local indication of recycle evaporator feed flow.

Resin Sluice Water to Evaporator Condensate Demineralizer

This local flow indicator is provided to show the flow of resin sluice water to the recycle evaporator condensate demineralizer during resin regeneration.

9.3.4.2.5.4 Level

Level in the Recycle Holdup Tanks

Instrumentation is provided to give an indication of the water level of each recycle holdup tank. The BRS panel receives both high level and low level alarms from this instrumentation.

Level in the Recycle Monitor Tanks

Instrumentation is provided to give an indication of the water level of each recycle monitor tank. The BRS panel receives both high level and low level alarms from this instrumentation. A recycle monitor tank low level pump trip is also provided by the level instrumentation.

TABLE 9.3-1

SAMPLING SYSTEM COMPONENT DESIGN PARAMETERS

SAMPLE HEAT EXCHANGERS

Number	10	(3 heat exchangers for reactor coolant samples and 2 spares; 3 for demineralizers and 2 for radwaste samples)

REACTOR COOLANT HEAT EXCHANGERS:

Design heat transfer rate (Duty for 700° F saturated steam to 132° F liquid) each, Btu/hr 2.52×10^5

	Shell	Tube
Design pressure, psig	400	2300
Design temperature, °F	146	700
Design flow, gpm/cm^3/min	10	1900
Fluid	Component cooling water	Sample
Material	Stainless Steel	Stainless Steel

DEMINERALIZERS AND RADWASTE HEAT EXCHANGERS:

Design heat transfer rate (Duty for 340° F to 115° F liquid) each, Btu/hr 5.7×10^4

	Shell	Tube
Design pressure, psig	400	150
Design temperature, °F	111	340
Design flow, gpm/cm^3/min	7	1900
Material	Stainless Steel	Stainless Steel

SAMPLE PANEL

Number of modules	3

REACTOR COOLANT MODULE:

Design pressure, psig	2300
Design temperature, °F	700° F
Design flow, cm^3/min (contingency)	200
Fluid	Sample
Material (tubing, valves, fittings)	Stainless Steel

TABLE 9.3-1 (Cont'd)

RADWASTE MODULE:	Sample Lines With Cooler	Sample Lines Without Cooler
Design pressure, psig	150	150
Design temperature, °F	120	120
Design flow, cm3/min (contingency)	200	200
Fluid	Sample	Sample
Material(tubing, valves, fittings)	Stainless Steel	Stainless Steel

TABLE 9.3-2

CHEMICAL AND VOLUME CONTROL SYSTEM DESIGN PARAMETERS

GENERAL

Seal water supply flow rate, for four reactor coolant pumps, nominal, gpm	32
Seal water return flow rate, for four reactor coolant pumps, nominal, gpm	12
Letdown flow:	
Normal, gpm	75 - 120
Maximum, gpm	120*
Charging flow (excludes seal water):	
Normal, gpm	55 - 100
Maximum, gpm	100
Temperature of letdown reactor coolant entering system, °F	555.9
Temperature of charging flow directed to reactor coolant system, °F	518
Temperature of effluent directed to boron recycle system, °F	115
Centrifugal charging pump bypass flow (each), gpm	60

TABLE 9.3-2 (Cont'd)

Amount of 4% boric acid solution required to meet cold shutdown (Mode 5) requirements shortly after full power operation, gallons	13,487
Maximum pressurization required for hydrostatic testing of reactor coolant system, psig	3107

Maximum letdown flow may be increased up to 150 gpm during shutdown operation in Modes 5 and 6 with an RHR pump providing letdown to the volume control tank. During letdown booster pump operations the letdown flow may be greater than 150 gpm.

TABLE 9.3-3

PRINCIPAL COMPONENT DATA SUMMARY

DATA	POSITIVE DISPLACEMENT PUMP	CENTRIFUGAL CHARGING PUMPS	BORIC ACID TRANSFER PUMPS (shared)	CHILLER PUMPS (shared)
Number	1	2	3	3
Design Pressure (psig)	3200	2800	150	150
Design temperature (°F)	200	200	200	200
Design flow (gpm)	98	150	75	400
Design head (ft)	5800	5800	235	150
Material	Austenitic Stainless Steel	Austenitic Stainless Steel	Austenitic Stainless Steel	Carbon Steel
Maximum operating pressure (psig)	3125			

TABLE 9.3-3 (Cont'd)

DATA	VOLUME CONTROL TANK	BORIC ACID TANK	BORIC ACID BATCHING TANK	CHEMICAL MIXING TANK	CHILLER SURGE TANK
Number of tanks	1	2 (shared)	1	1	1
Capacity (gal.)	400(ft^3)	48,000	800	5	500
Design pressure (psig)	75	Atmospheric	Atmospheric		
Design temperature (°F)	250	200	300	200	200
Material	Austenitic Stainless Steel	Austenitic Stainless Steel	Austenitic Stainless Steel	Austenitic Stainless Steel	Carbon Steel

TABLE 9.3-3 (Cont'd)

DATA		REGENERATIVE HEAT EXCHANGER	LETDOWN HEAT EXCHANGER	EXCESS LETDOWN HEAT EXCHANGER	SEAL WATER HEAT EXCHANGER	LETDOWN REHEAT HEAT EXCHANGER	MODERATING HEAT EXCHANGER	LETDOWN CHILLER HEAT EXCHANGER
Number of heat exchangers		2	2	2	1	1	1	1
Design heat transfer rate, Btu/hr		11.0×10^6	15.9×10^6	5.18×10^6	1.6×10^6	1.49×10^6	2.53×10^6	1.65×10^6
SHELL SIDE								
Design pressure, (psig)		2485	150	150	150	300	300	150
Design temperature, (°F)		650	250	250	250	200	200	200
Flow, lb/hr:	Design	-	498,000	125,000	125,000	59,640	59,640	175,000*
	Normal	37,300	204,675	-	-	-	-	175,000**
Inlet temp: (°F)	Design	-	105	-	-	-	50*	39*
	Normal	560	105	105	105	115	140*	90**
Outlet temp: (°F)	Design	-	137	-	-	-	92.4*	48.4*
	Normal	290	137	146.4	121	140	123.2**	99.8**
Fluid		Borated Reactor Coolant	Component Cooling Water	Component Cooling Water	Component Cooling Water	-	-	-

* Design Boron storage mode
** Boron release mode

TABLE 9.3-3 (Cont'd)

DATA		REGENERATIVE HEAT EXCHANGER	LETDOWN HEAT EXCHANGER	EXCESS LETDOWN HEAT EXCHANGER	SEAL WATER HEAT EXCHANGER	LETDOWN REHEAT HEAT EXCHANGER	MODERATING HEAT EXCHANGER	LETDOWN CHILLER HEAT EXCHANGER
Material		Austenitic Stainless Steel	Carbon Steel	Carbon Steel	Carbon Steel	Austenitic Stainless Steel	Austenitic Stainless Steel	Carbon Steel
TUBE SIDE								
Design pressure, (psig)		3100	600	2485	150	600	300	300
Design temperature, (°F)		650	400	650	250	400	200	200
Flow lb/hr:	Design	-	59,600	12,410	48,400	44,730	59,640	59,640*
	Normal	27,400	37,300	-	-	-	-	59,600**
Inlet temp: (°F)	Design	-	380	-	-	-	115*	72.6*
	Normal	130	290	560	155.9	280	115**	123.7**
Outlet temp: (°F)	Design	-	115	-	-	-	72.6*	45*
	Normal	517	115	165	115	246.7	131.8**	94.9**
Fluid		Borated Reactor Coolant	Borated Reactor Coolant	Borated Reactor Coolant	Borated Reactor Coolant	-	-	-
Material		Austenitic Stainless Steel	Austenitic Stainless Steel	Austenitic Stainless Steel	Austenitic Stainless Steel	Austenitic Stainless Steel	Austenitic Stainless Steel	Austenitic Stainless Steel

* Design Boron storage mode
** Boron release mode

TABLE 9.3-3 (Cont'd)

MIXED BED DEMINERALIZERS	
Number	2
Design pressure, psig	300
Design temperature, °F	250
Design flow, gpm	120*
Resin volume, each, ft^3 (Design)	39
Material	Austenitic Stainless Steel
CATION BED DEMINERALIZERS	
Number	1
Design pressure, psig	300
Design temperature, °F	250
Design flow, gpm	75
Resin volume, ft^3	27
Material	Austenitic Stainless Steel
THERMAL REGENERATION DEMINERALIZERS	
Number (Per unit)	5
Design pressure, psig	300
Design temperature, °F	250
Design flow, gpm	250
Resin volume, ft^3	74.3
Material	Austenitic Stainless Steel

* At Byron, the maximum demineralizer flow may be increased up to 150 gpm during shutdown operation in Modes 5 and 6, with the RCS depressurized and at a temperature less than 140°F and an RHR pump providing letdown flow through a

TABLE 9.3-3 (Cont'd)

demineralizer to the volume control tank. At Braidwood, the maximum demineralizer flow may be increased up to 150 gpm during shutdown operation in Modes 5 and 6, with the RCS pressure less than 360 psig and at a temperature less than 200°F and an RHR pump providing letdown flow through a demineralizer to the volume control tank.

During letdown booster pump operations the letdown flow may be greater than 150 gpm.

TABLE 9.3-3 (Cont'd)

REACTOR COOLANT FILTER	
Number	1
Design pressure, psig	300
Design temperature, °F	250
Design flow, gpm	150
Particle retention	≥98% of 25 micron size
Material, (vessel)	Austenitic Stainless Steel
SEAL WATER INJECTION FILTERS	
Number	2
Design pressure, psig	3100
Design temperature, °F	250
Design flow, gpm	80
Particle retention	≥98% of 5 micron size
Material, (vessel)	Austenitic Stainless Steel
SEAL WATER RETURN FILTER	
Number	1
Design pressure, psig	300
Design temperature, °F	250
Design flow, gpm	150
Particle retention	≥98% of 25 micron size
Material, (vessel)	Austenitic Stainless Steel
BORIC ACID FILTER	
Number	2 shared
Design pressure, psig	300

TABLE 9.3-3 (Cont'd)

Design temperature, °F		250
Design flow, gpm		150
Particle retention		≥98% of 25 micron size
Material, (vessel)		Austenitic Stainless Steel
LETDOWN ORIFICE	45 gpm	75 gpm
Number	1	2
Design flow, lb/hr	22,230	37,050
Differential pressure at design flow, psia	1,700	1,700
Design pressure, psig	2,485	2,485
Design temperature, °F	650	650
Material	Austenitic Stainless Steel	Austenitic Stainless Steel
RCP NO. 1 SEAL BYPASS ORIFICES		
Number		1/loop
Design flow, gpm		1
Differential pressure at design flow, psig		300
Design pressure, psig		2485
Design temperature, °F		250
Material		Austenitic Stainless Steel
CHILLER		
Number		1
Capacity, Btu/hr		1.66×10^6

TABLE 9.3-3 (Cont'd)

EVAPORATOR PORTION	
Design flow, gpm	352
Inlet temperature, °F	48.4
Outlet temperature, °F	39
CONDENSER PORTION	
Flow, gpm	414
Inlet temperature, °F	100
Outlet temperature, °F	110.7
BORIC ACID BLENDER	
Design pressure, psig	150
Design temperature, °F	250

TABLE 9.3-4

PRINCIPAL COMPONENT DATA SUMMARY

DATA	RECYCLE EVAPORATOR FEED PUMPS	RECYCLE MONITOR TANK PUMPS
Number for both units	2	2
Design pressure (psig)	150	150
Design temperature (°F)	200	200
Design flow (gpm)	30/100	35/100
Design head (ft)	320/250	250/200
Material	Austenitic Stainless Steel	Austenitic Stainless Steel

TABLE 9.3-4 (Cont'd)

DATA	RECYCLE HOLDUP TANKS	RECYCLE MONITOR TANKS
Number for both units	2	2
Capacity (gal)	125,000	20,000
Design pressure (psig)	15	Atmospheric
Design temperature (°F)	200	150
Material	Austenitic Stainless Steel	Stainless Steel

TABLE 9.3-4 (Cont'd)

RECYCLE EVAPORATOR FEED DEMINERALIZERS	
Number for both units	2
Design pressure, psig	300
Design temperature, °F	250
Design flow, gpm	120
Resin volume, ft^3	39
Material	Austenitic Stainless Steel
RECYCLE EVAPORATOR CONDENSATE DEMINERALIZER	
Number for both units	1
Design pressure, psig	300
Design temperature, °F	250
Design flow, gpm	75
Resin volume, ft^3	27
Material	Austenitic Stainless Steel
RECYCLE EVAPORATOR FEED FILTER	
Number for both units	2
Design pressure, psig	300
Design temperature, °F	250
Design flow, gpm	150
Particle retention	98% of 5 micron size
Material, (vessel)	Austenitic Stainless Steel

TABLE 9.3-4 (Cont'd)

RECYCLE EVAPORATOR CONDENSATE FILTER	
Number for both units	1
Design pressure, psig	200
Design temperature, °F	250
Design flow, gpm	150
Particle retention	98% of 25 micron size
Material, (vessel)	Austenitic Stainless Steel
RECYCLE EVAPORATOR CONCENTRATES FILTER	
Number for both units	1
Design pressure, psig	200
Design temperature, °F	250
Design flow, gpm	150
Particle retention	98% of 25 micron size
Material, (vessel)	Austenitic Stainless Steel
RECYCLE EVAPORATOR PACKAGE	
Number for both units	2
Design flow, gpm	15
Concentration of concentrate (boric acid), wt. %	4
Concentration of condensate	<10 ppm boron as H_3BO_3
Material	Stainless Steel

TABLE 9.3-5

FAILURE MODE AND EFFECTS ANALYSIS CHEMICAL AND VOLUME CONTROL SYSTEM

ACTIVE COMPONENTS - NORMAL PLANT OPERATION AND LOAD FOLLOW

	COMPONENT	FAILURE MODE	CVCS OPERATION FUNCTION	*EFFECT ON SYSTEM OPERATION AND SHUTDOWN	**FAILURE DETECTION METHOD	REMARKS
1.	Air diaphragm operated globe valve 1CV459 (1CV460 analogous)	a. Fails open.	a. Charging and Volume Control - letdown flow.	a. Failure reduces redundancy of providing letdown flow isolation to protect PRZ heaters from uncovering at low water level in PRZ. No effect on system operation. Alternate isolation valve (1CV-460) provides backup letdown flow isolation.	a. Valve position indication (open to closed position change) at CB.	a. Valve is designed to fail "closed" and is electrically wired so that the electrical solenoid of the air diaphragm operator is energized to open the valve. Solenoid is deenergized to close the valve upon the generation of a low level PRZ control signal. The valve is electrically interlocked with three letdown orifice isolation valves and may not be
		b. Fails closed.	b. Charging and Volume Control - letdown flow.	b. Failure blocks normal letdown flow to VCT. Minimum letdown flow requirements for boration of RCS to hot standby concentration level may be met by establishing letdown flow through alternate excess letdown	b. Valve position indication (closed to open position change) at CB; letdown flow temperature indication TI-127) at CB; letdown flow pressure indication	

*See list at end of table for definition of acronyms and abbreviations used.

**As part of plant operation, periodic tests, surveillance inspections and instrument calibrations are made to monitor equipment and performance. Failures may be detected during such monitoring of equipment in addition to detection methods noted.

TABLE 9.3-5 (Cont'd)

COMPONENT	FAILURE MODE	CVCS OPERATION FUNCTION	EFFECT ON SYSTEM OPERATION AND SHUTDOWN	FAILURE DETECTION METHOD	REMARKS
			flow path. If the alternate excess letdown flow path to VCT is not available due to common mode failure (loss of instrument air supply) affecting the opening operation of isolation valves in each flow path, the plant operator can borate the RCS to a hot standby concentration level without letdown flow by taking advantage of the steam space available in the PRZ.	(PI-131) at CB; letdown flow indication (FI-132) at CB; and VCT level indication (LI-112) and low water level alarm at CB.	opened manually from the CB if any of these valves are at an open position.
2. Air diaphragm operated globe valve 1CV-8149B (1CV-8149C and 1CV-8149A analogous)	a. Fails open.	a. Charging and Volume Control - letdown flow.	a. Failure prevents isolation of normal letdown flow through regenerative heat exchanger when bringing the reactor to a cold shutdown condition after the RHRS is placed into operation. No effect on hot standby operation. Containment isolation valve (1CV8152 or 1CV8160)	a. Valve position indication (open to closed position change) at CB.	1. Valve is of similar design as that stated for item #1. Solenoid is deenergized to close the valve upon the generation of a low level PRZ signal or closing of letdown isolation valves (1CV459 and

TABLE 9.3-5 (Cont'd)

COMPONENT	FAILURE MODE	CVCS OPERATION FUNCTION	EFFECT ON SYSTEM OPERATION AND SHUTDOWN	FAILURE DETECTION METHOD	REMARKS
			may be remotely closed from the CB to isolate letdown flow through the heat exchanger.		1CV460) upstream of the regenerative heat exchanger.
	b. Fails closed.	a. Charging and Volume Control - letdown flow.	b. Failure blocks normal letdown flow to VCT. Normal letdown flow to VCT may be maintained by opening alternate letdown orifice isolation valve 1CV8149C. Minimum letdown flow requirements for boration of RCS to hot standby concentration level may be met by opening letdown orifice isolation valve 1CV-8149A or 1CV8149C. If common mode failure (loss of instrument air) prevents opening of these valves and also prevents establishing alternate flow through excess letdown flow path, plant operator can borate the RCS to a hot standby concentration level without letdown flow by		

TABLE 9.3-5 (Cont'd)

	COMPONENT	FAILURE MODE	CVCS OPERATION FUNCTION	EFFECT ON SYSTEM OPERATION AND SHUTDOWN	FAILURE DETECTION METHOD	REMARKS
				taking advantage of steam space available in PRZ.		
3.	Air diaphragm operated globe valve 1CV8152 (1CV8160 analogous)	a. Fails closed.	a. Charging and Volume Control - letdown flow.	a. Same effect on system operation as that stated for item #1, failure mode "Fails closed."	a. Same methods of detection as those stated for item #1, failure mode "Fails closed". In addition, close position group monitoring light at CE.	1. Valve is of similar design as that stated for item #1. Solenoid is deenergized to close the valve upon the generation of an ESF "T" signal.
		b. Fails open	b. Charging and Volume Control - letdown flow.	b. Failure has no effect on CVCS operation during normal plant operation and load follow. However, under accident conditions requiring containment isolation, failure reduces the redundancy of providing isolation of normal letdown line.	b. Valve position indication (open) at CB.	

TABLE 9.3-5 (Cont'd)

	COMPONENT	FAILURE MODE	CVCS OPERATION FUNCTION	EFFECT ON SYSTEM OPERATION AND SHUTDOWN	FAILURE DETECTION METHOD	REMARKS
4.	Air diaphragm operated globe valve 1CVTCV-381B	a. Fails open.	a. Boron Concentration Control - boron thermal regeneration (boration).	a. Failure inhibits use of BTRS for load follow operation (boration) due to low temperature of letdown flow entering BTRS demineralizers. Alternate boration of reactor coolant for load follow is possible using RMCS of CVCS. No effect on operation to bring reactor to hot standby condition.	a. Letdown heat exchanger tube discharge flow (FI-132) and pressure (PI-131) indications at CB and BTR demineralizer inlet flow temperature indication (TI-381) at CB if BTRS is in operation	1. Valve is designed to fail "open" and is electrically wired so that the electrical solenoid of the air diaphragm operator is energized to close the valve. 2. BTRS operation is not required in operations of CVCS systems used to bring the reactor to hot standby condition.
		b. Fails closed.	b. Boron Concentration Control - boron thermal regeneration (boration).	b. Failure inhibits use of BTRS for load follow operation (boration) due to loss of temperature control of letdown flow entering BTRS demineralizers. Failure also blocks normal letdown flow to VCT when BTRS is not being used for load	b. Same method of detection as those stated for item #1, failure mode "Fails closed" except no "closed to open position change" indication at CB.	

TABLE 9.3-5 (Cont'd)

COMPONENT	FAILURE MODE	CVCS OPERATION FUNCTION	EFFECT ON SYSTEM OPERATION AND SHUTDOWN	FAILURE DETECTION METHOD	REMARKS
			follow. Minimum letdown flow requirements for boration of RCS to hot standby concentration level may be met as stated for effect on system operation for item #1, failure mode "Fails closed."		
5. Air diaphragm operated globe valve 1CVPCV-131	a. Fails open.	a. Charging and Volume Control - letdown flow.	a. Failure prevents control of pressure to prevent flashing of letdown flow in letdown heat exchanger and also allows high pressure fluid to mixed bed demineralizers. Relief valve (1CV-8119) opens in demineralizer line to release pressure to VCT and valve (1CVTCV-129) changes position to divert flow to VCT. Boration of RCS to hot standby concentration level is possible with valve failing open.	a. Letdown heat exchanger tube discharge flow indication (FI-132) and high flow alarm at CB; temperature indication (TI-130) and high temperature alarm at CB; and pressure indication (PI-131) at CB.	1. Same remark as stated for item #4, in regards to valve design. 2. As a design transient the letdown heat exchanger is designed for complete loss of charging flow.

TABLE 9.3-5 (Cont'd)

	COMPONENT	FAILURE MODE	CVCS OPERATION FUNCTION	EFFECT ON SYSTEM OPERATION AND SHUTDOWN	FAILURE DETECTION METHOD	REMARKS
		b. Fails closed.	b. Charging and Volume Control - letdown flow.	b. Same effect on system operation as that for item #1, failure mode "Fail closed."	b. Letdown heat exchanger discharge flow indication (FI-132), and pressure indication (PI-131) and high pressure alarm at CB.	
6.	Air diaphragm operated three-way valve 1CVTCV-129	a. Fails open for flow only to VCT.	a. Charging and Volume Control - letdown flow.	a. Letdown flow bypassed from flowing to mixed bed demineralizers and BTRS. Failure prevents ionic purification of letdown flow and inhibits operation of BTRS. Boration of RCS to hot standby concentration level is possible with valve failing open for flow only to VCT.	a. Valve position indication (VC Tank) at CB and RCS activity level when sampling letdown flow.	1. Electrical solenoid of air diaphragm operator is electrically wired so that solenoid is energized to open valve for flow to the mixed bed demineralizers. Valve opens for flow to VCT on "High Letdown Temp." or on "High Letdown Reheat HX Outlet Temp."

TABLE 9.3-5 (Cont'd)

COMPONENT	FAILURE MODE	CVCS OPERATION FUNCTION	EFFECT ON SYSTEM OPERATION AND SHUTDOW	FAILURE DETECTION METHOD	REMARKS
	b. Fails open for flow only to mixed bed deminer-alizer.	b. Charging and Volume Control - letdown flow.	b. Continuous letdown to mixed bed demineralizers and BTRS. Failure prevents automatic isolation of mixed bed demineralizers and BTRS under fault condition of high letdown flow temperatures. These systems may be manually isolated using local valves (1CV8524A and 1CV8524B) at mixed bed demineralizers. Boration of RCS to hot standby concentration level is possible with valve failing open for flow only to demineralizer.	b. Valve position indication (Demin.) at CB. If BTRS is in operation, BTRS demineralizer return flow indication (FI-385) indicating flow during an alarm condition of high letdown reheat heat exchanger outlet temperature or high letdown temperature.	2. Technical specifications provide a limit on RCS activity.
7. Air diaphragm operated diaphragm valve 1BR7054	a. Fails closed.	a. Boron Concentration Control - boron thermal regeneration or storage.	a. Failure inhibits use of BTRS for load follow operation (boration or dilution) due to flow isolation of the BTRS. Alternate boration or dilution of reactor coolant for load follow may be accomplished using RMCS of CVCS. No	a. Valve position indication (closed to open position change) at CB; BTRS operation indication (borate or dilute) at CB and BTR deminer-alizer return flow indication	1. Valve is designed to fail "closed" and is electrically wired so that the electrical solenoid of air diaphragm operator is energized to open the valve.

TABLE 9.3-5 (Cont'd)

	COMPONENT	FAILURE MODE	CVCS OPERATION FUNCTION	EFFECT ON SYSTEM OPERATION AND SHUTDOWN	FAILURE DETECTION METHOD	REMARKS
				effect on operation to bring reactor to hot standby condition.	(FI-385) and inlet flow temperature indication (TI-381) at CB.	2. BTRS not required to bring reactor to hot standby condition.
8.	Air diaphragm operated diaphragm valve 1BR7002A	a. Fails closed.	a. Boron Concentration Control - boron storage.	a. Failure inhibits use of BRTS for load follow operation (dilution) due to flow isolation of letdown chiller heat exchanger. Alternate dilution of reactor coolant for load follow may be accomplished using RMCS of CVCS. No effect on operations to bring reactor to hot standby condition.	a. BTRS operation indication (dilute) at CB; letdown reheat heat exchanger outlet temperature (TI-381) at CB; and RCS boron level when sampling letdown flow.	1. Same remarks as those stated above for item #7.
		b. Fails open.	b. Boron Concentration Control - boron thermal regeneration.	b. Failure inhibits use of BTRS for load follow operation (boration) due to flow through letdown chiller heat exchanger. Alternate boration of reactor coolant for load follow may be accomplished using RMCS of CVCS. No	b. BTRS operation indication (boration) at CB; BTRS return flow temperature indication (TI-386) at CB; BTR return flow indication (FI-385) at CB; and RCS boron level	

TABLE 9.3-5 (Cont'd)

COMPONENT	FAILURE MODE	CVCS OPERATION FUNCTION	EFFECT ON SYSTEM OPERATION AND SHUTDOWN	FAILURE DETECTION METHOD	REMARKS
			effect on operation to bring reactor to hot standby operation.	when sampling letdown flow.	
9. Air diaphragm operated diaphragm valve 1BR7002B	a. Fails closed.	a. Boron Concentration Control - boron storage.	a. Same effect on system operation as that stated above for item #8, failure mode "Fails closed."	a. Same methods of detection as those stated above for item #8 failure mode "Fails closed."	1. Same remark as those stated above for item #7.
	b. Fails open.	b. Boron Concentration Control - boron thermal regeneration.	b. Failure inhibits use of BTRS for load follow operation (boration) due to bypass of letdown flow from letdown reheat heat exchanger. Alternate boration of reactor coolant may be accomplished using RMCS of CVCS. No effect on operation to bring reactor to hot standby condition.	b. Same methods of detection as those stated above for item #8, failure mode "Fails open."	
10. Relief valve 1CV8117	a. Fails open.	a. Charging and Volume Control - letdown flow.	a. Letdown flow is relieved to pressurizer relief tank. Failure inhibits use of demineralizers for reactor coolant purification	a. High temperature relief line indication (TI-125) and alarm at CB and VCT level indication	1. Radioactive fluid contained.

TABLE 9.3-5 (Cont'd)

COMPONENT	FAILURE MODE	CVCS OPERATION FUNCTION	EFFECT ON SYSTEM OPERATION AND SHUTDOWN	FAILURE DETECTION METHOD	REMARKS
			and use of BTRS. Normal letdown line can be isolated and minimum letdown flow requirements for hot standby may be met by establishing letdown flow through alternate excess letdown flow path.	(LI-112) and low level alarm at CB.	
11. Relief valve 1CV8119	a. Fails open.	a. Charging and Volume Control - letdown flow.	a. Letdown flow is relieved to VCT. Failure inhibits use of demineralizers for reactor coolant purification and use of BTRS. Normal letdown line can be isolated and minimum letdown flow requirement for hot standby may be met by establishing flow through alternate excess letdown flow path.	a. RCS activity level when sampling letdown flow. When BTRS is operating, low BTR demineralizer return flow indication (FI-385) at CB.	1. Radioactive fluid contained.
12. Air diaphragm operated diaphragm valve 1CV8542	a. Fails closed.	a. Boron Concentration Control - boron thermal regeneration or storage.	a. Normal purification of reactor coolant using only mixed bed demineralizers cannot be performed. Failure	a. BTRS operation indication (off) at CB and RCS activity level when sampling	1. Same remarks as those stated for item #4.

TABLE 9.3-5 (Cont'd)

COMPONENT	FAILURE MODE	CVCS OPERATION FUNCTION	EFFECT ON SYSTEM OPERATION AND SHUTDOWN	FAILURE DETECTION METHOD	REMARKS
			also blocks normal letdown flow. Boration of RCS to hot standby concentration level may be met as stated for effect on system operation for item #1, failure mode "Fails closed."	letdown flow. Valve position indication (closed to open position change) at CB.	
	b. Fails open.	b. Boron Concentration Control - boron thermal regeneration or storage.	b. Failure inhibits use of BTRS for load follow operation (boration or dilution) due to bypass of letdown flow from BTRS. Alternate boration or dilution of reactor coolant for load follow may be accomplished using RMCS of CVCS. No effect on operations to bring reactor to hot standby condition.	b. RCS boron level when sampling letdown flow. If BTRS is operating, low BTR demineralizer return flow indication (FI-385) at CB. Valve position indication (open to closed position change) at CB.	
13. Air diaphragm operated diaphragm valve 1BR7045	a. Fails closed.	a. Boron Concentration Control - boron storage.	a. Failure inhibits use of BTRS for load follow operation (dilution) due to flow isolation of BTR demineralizers.	a. RCS boron level when sampling letdown flow. If BTRS is operating, BTRS operation indication	1. Same remarks as those stated for item #7.

TABLE 9.3-5 (Cont'd)

COMPONENT	FAILURE MODE	CVCS OPERATION FUNCTION	EFFECT ON SYSTEM OPERATION AND SHUTDOWN	FAILURE DETECTION METHOD	REMARKS
			Alternate dilution of reactor coolant for load follow may be accomplished using RMCS of CVCS. No effect on operations to bring reactor to hot standby condition.	(dilute) at CB and low BTR demineralizer return flow indication (FI-385) at CB.	
	b. Fails open.	b. Boron Concentration Control - boron thermal regeneration	b. Failure inhibits use of BTRS for load follow operation (boration) due to flow bypass of BTR demineralizers. Alternate boration of reactor coolant for load follow may be accomplished using RMCS of CVCS. No effect on operations to bring reactor to hot standby condition.	b. RCS boron level when sampling letdown flow. If BTRS is operating, BTRS operation indication (borate) at CB.	
14. Air diaphragm operated diaphragm valve 1BR7059	a. Fails open	a. Boron Concentration Control - boron storage.	a. Failure inhibits use of BTRS for load follow operation (dilution) due to flow bypass of BTR demineralizers. Alternate dilution of reactor	a. RCS boron level when sampling letdown flow. If BTRS operation indication (dilute) at CB.	1. Same remarks as those stated for item #4.

TABLE 9.3-5 (Cont'd)

COMPONENT	FAILURE MODE	CVCS OPERATION FUNCTION	EFFECT ON SYSTEM OPERATION AND SHUTDOWN	FAILURE DETECTION METHOD	REMARKS
			coolant for load follow may be accomplished using RMCS of CVCS. No effect on operations to bring reactor to hot standby condition.		
	b. Fails closed.	b. Boron Concentration Control - boron thermal regeneration.	b. Failure inhibits use of BTRS for load follow operation (boration) due to flow bypass of BTR demineralizers. Alternate boration of reactor coolant for load follow may be accomplished using RMCS of CVCS. No effect on operations to bring reactor to hot standby condition.	a. RCS boron level when sampling letdown flow. If BTRS is operating, BTRS operation indication (borate) at CB and low BTR demineralizer return flow indication (FI-385) at CB.	
15. Air diaphragm operated diaphragm valve 1BR7058	a. Fails closed.	a. Boron Concentration Control - boron storage.	a. Failure inhibits use of BTRS for load follow operation (dilution) due to flow isolation of BTR demineralizers. Alternate dilution of reactor coolant for load follow may be accomplished using RMCS of CVCS.	a. RCS boron level when sampling letdown flow. If BTRS is operating, BTRS operation indication (dilute) at CB and low BTR demineralizer return	1. Same remarks as those stated for item #7.

TABLE 9.3-5 (Cont'd)

COMPONENT	FAILURE MODE	CVCS OPERATION FUNCTION	EFFECT ON SYSTEM OPERATION AND SHUTDOWN	FAILURE DETECTION METHOD	REMARKS
			No effect on operations to bring reactor to hot standby condition.	flow indication (FI-385) at CB.	
	b. Fails open	b. Boron Concentration Control-boron thermal regeneration.	b. Failure inhibits use of BTRS for load follow operation (boration) due to flow bypass of BTR demineralizers. Alternate boration of reactor coolant for load follow may be accomplished using RMCS of CVCS. No effect on operations to bring reactor to hot standby condition.	b. RCS boron level when sampling letdown flow. If BTRS is operating, BTRS operation indication (borate) at CB.	
16. Air diaphragm operated diaphragm valve 1BR7040	a. Fails open.	a. Boron Concentration Control - boron storage.	a. Same effect on system operation as that stated above for item #14, failure mode "Fails open to flow to BTR demineralizers only for boron release (boration)."	a. Same methods of detection as those stated above for item #14, failure mode "Fails open to flow to BTR demineralizers only for boron release (boration)."	1. Same remarks as those stated for item #4.

TABLE 9.3-5 (Cont'd)

COMPONENT	FAILURE MODE	CVCS OPERATION FUNCTION	EFFECT ON SYSTEM OPERATION AND SHUTDOWN	FAILURE DETECTION METHOD	REMARKS
	b. Fails closed.	b. Boron Concentration Control - boron thermal regeneration.	b. Failure inhibits use of BTRS for load follow operation (boration) due to blockage of return letdown flow from letdown chiller heat exchanger. Alternate boration of reactor coolant for load follow may be accomplished using RMCS of CVCS. No effect on operations to bring reactor to hot standby condition.	b. Same methods of detection as those stated above for item #14, failure mode, "Fails open to flow to BTR demineralizers only for boron storage (dilution)."	
17. Air diaphragm operated diaphragm valve 1BR7041	a. Fails open.	a. Boron Concentration Control - boron storage.	a. Failure inhibits use of BTRS for load follow operation (dilution) due to flow bypass of letdown chiller heat exchanger. Alternate dilution of reactor coolant for load follow may be accomplished using RMCS of CVCS. No effect on operations to bring reactor to hot standby condition.	a. RCS boron level when sampling letdown flow. If BTRS is operating, BTRS operation indication (dilute) at CB and letdown reheat heat exchanger outlet temperature indication (TI-381) at CB.	1. Same remarks as those stated for item #4.

TABLE 9.3-5 (Cont'd)

COMPONENT	FAILURE MODE	CVCS OPERATION FUNCTION	EFFECT ON SYSTEM OPERATION AND SHUTDOWN	FAILURE DETECTION METHOD	REMARKS
	b. Fails closed.	b. Boron Concentration Control - boron thermal regeneration.	b. Failure inhibits use of BTRS for load follow operation (boration) due to flow isolation of letdown reheat heat exchanger and BTR demineralizers. Alternate boration of reactor coolant for load follow may be accomplished using RMCS of CVCS. No effect on operation to bring reactor to hot standby condition.	b. Same methods of detection as those stated for item #15, failure mode "Fails closed."	
18. Air diaphragm operated diaphragm valve 1BR7022	a. Fails closed.	a. Boron Concentration Control - boron storage.	a. Failure inhibits use of BTRS for load follow operation (dilution) due to flow blockage of return letdown flow from moderating heat exchanger. Alternate dilution of reactor coolant for load follow may be accomplished using RMCS of CVCS. No effect on operations to bring reactor to hot standby condition.	a. RCS boron level when sampling letdown flow. If BTRS is operating, BTRS operation indication (dilute) at CB and low BTR demineralizer return flow indication (FI-385) at CB.	1. Same remarks as those stated for item #7.

TABLE 9.3-5 (Cont'd)

COMPONENT	FAILURE MODE	CVCS OPERATION FUNCTION	EFFECT ON SYSTEM OPERATION AND SHUTDOWN	FAILURE DETECTION METHOD	REMARKS
	b. Fails open.	a. Boron Concentration Control - boron thermal regeneration.	b. Failure inhibits use of BTRS for load follow operation (boration) due to bypass of flow from letdown chiller heat exchanger of return letdown flow. Alternate boration of reactor coolant for load follow may be accomplished using RMCS of CVCS. No effect on operation to bring reactor to hot standby condition.	b. RCS boron level when sampling letdown flow. If BTRS is operating, BTRS operate indication (borate) at CB and BTRS return flow temperature indication (TI-386) and high temperature alarm at CB.	
19. Air diaphragm operated butterfly valve 1BRTCV 386	a. Fails closed.	a. Boron Concentration Control - boron thermal regeneration and storage.	a. Failure inhibits use of BTRS for load follow operation (boration and dilution) due to flow blockage of chiller flow through letdown chiller heat exchanger. Alternate boration and dilution of reactor coolant for load follow may be accomplished using	a. RCS boron level when sampling letdown flow. If BTRS is operating, BTRS operate indication (borate or dilute) at CB; BTRS return flow temperature indication (TI-386) and high	1. Valve is designed to fail "closed." 2. BTRS not used to bring the reactor to hot standby condition.

TABLE 9.3-5 (Cont'd)

COMPONENT	FAILURE MODE	CVCS OPERATION FUNCTION	EFFECT ON SYSTEM OPERATION AND SHUTDOWN	FAILURE DETECTION METHOD	REMARKS
			RMCS or CVCS. No effect on operation to bring reactor to hot standby condition.	temperature alarm at CB; and chiller surge tank temperature indication (TI-379) at CB.	
20. Air diaphragm operated butterfly valve 1BRFC 375	a. Fails open.	a. Boron Concentration Control - boron thermal regeneration and storage.	a. Failure inhibits use of BTRS for load follow operation (boration and dilution) due to flow bypass of chiller flow from letdown chiller heat exchanger. Alternate boration and dilution of reactor coolant for load follow may be accomplished using RMCS of CVCS. No effect on operations to bring reactor to hot standby condition.	a. RCS boron level when sampling letdown flow. If BTRS is operating, BTRS return flow temperature indication (TI-386) and high temperature alarm at CB and chiller surge tank temperature indication (TI-379) at CB.	1. Valve is designed to fail "open." 2. BTRS not used to bring the reactor to hot standby condition.
21. Chiller Unit AHCU	a. Fails to cool liquid.	a. Boron Concentration Control - boron thermal regeneration and storage.	a. Failure inhibits use of BTRS for load follow operation (boration and dilution) due to loss of cooling capability of letdown	a. Same methods of detection as those stated above for item #19. In addition, BTRS	1. BTRS not used to bring the reactor to hot standby condition.

TABLE 9.3-5 (Cont'd)

COMPONENT	FAILURE MODE	CVCS OPERATION FUNCTION	EFFECT ON SYSTEM OPERATION AND SHUTDOWN	FAILURE DETECTION METHOD	REMARKS
			chiller heat exchanger. Alternate boration and dilution of reactor coolant for load follow may be accomplished using RMCS of CVCS. No effect on operations to bring reactor to hot standby condition.	operation indication (borate or dilute) at CB.	
22. Chiller Pump #1 APCI (Chiller Pump #2 analogous)	a. Fails to deliver working fluid.	a. Boron Concentration Control - boron thermal regeneration and storage.	a. No effect on BTRS system operation. Redundant chiller pump #3 provides necessary delivery of working fluid for chiller unit operation. BTRS not required in operations to bring reactor to hot standby condition.	a. BTRS operation indication (borate or dilute) at CB and local pump discharge flow pressure indication (PI-377A).	1. Chiller pump #1 provides flow to chiller of Unit #1 and chiller pump #2 provides flow to chiller of Unit #2. Chiller pump #3 is used as a replacement for either pump. Operator action is required to place chiller pump #3 in service.

TABLE 9.3-5 (Cont'd)

COMPONENT	FAILURE MODE	CVCS OPERATION FUNCTION	EFFECT ON SYSTEM OPERATION AND SHUTDOWN	FAILURE DETECTION METHOD	REMARKS
23. Air diaphragm operated globe valve 1CVTCV-381A	a. Fails closed.	a. Boron Concentration Control - boron thermal regeneration.	a. Failure inhibits use of BTRS for load follow operation (boration) due to flow isolation of shell side of letdown reheat heat exchanger. Alternate boration of reactor coolant for load follow may be accomplished using RMCS of CVCS. No effect on operation to bring reactor to hot standby condition.	a. RCS boron level when sampling letdown flow. If BTRS is operating, BTRS operation indication (borate) at CB and letdown reheat heat exchanger outlet temperature indication (TI-381) at CB.	1. Same remarks as those stated for item #7.
	b. Fails open.	b. Boron Concentration Control - boron storage	b. Failure inhibits use of BTRS for load follow operation (dilution) due to passage of CVCS letdown flow through tube side of letdown reheat heat exchanger. Alternate dilution of reactor coolant may be accomplished using RMCS of CVCS. No effect on operation to bring reactor to hot standby condition.	b. RCS boron level when sampling letdown flow. If BTRS is operating, BTRS operation indication (dilute) at CB and letdown reheat heat exchanger outlet temperature indication (TI-381) at CB.	

TABLE 9.3-5 (Cont'd)

COMPONENT	FAILURE MODE	CVCS OPERATION FUNCTION	EFFECT ON SYSTEM OPERATION AND SHUTDOWN	FAILURE DETECTION METHOD	REMARKS
24. Air diaphragm operated globe valve 1CV8153A (1CV8153B analogous)	a. Fails closed.	a. Charging and Volume Control - letdown flow.	a. Failure inhibits use of excessive letdown heat exchanger #1 of the excess letdown fluid system of the CVCS as an alternate system that may be used for letdown flow control during normal plant operation and inhibits use of excessive letdown heat exchanger #1 of the excess letdown system to control water level in the pressurizer of the RCS during final stage of plant startup due to flow blockage. No effect on system operation. Alternate excessive letdown heat exchanger #2 available.	a. Valve position indication (closed to open position change) at CB and excess letdown heat exchanger outlet pressure indication (PI-124) and temperature indication (TI-122A at CB.	1. Same remark as that stated for item #7 in regards to valve design. 2. If normal letdown and excess letdown flow is not available for hot standby operations, plant operator can borate RCS to hot standby concentration using steam space available in PRZ. 3. Operator action is required to place excessive heat exchanger #2 in service if isolation valve 1CV8153 fails closed.

TABLE 9.3-5 (Cont'd)

COMPONENT	FAILURE MODE	CVCS OPERATION FUNCTION	EFFECT ON SYSTEM OPERATION AND SHUTDOWN	FAILURE DETECTION METHOD	REMARKS
	b. Fails open	b. Charging and Volume Control - letdown flow.	b. Failure reduces redundancy of providing excess letdown flow isolation during normal plant operation and for plant startup. No effect on system operation. Alternate CVCS letdown header (RCS) valves (1RC8037A, 1RC8037B, 1RC8037C and 1RC8037D) closed to provide backup flow isolation of excess letdown line.	b. Valve position indication (open to closed position change) at CB.	
25. Air diaphragm operated globe valve 1CVHVC-123	a. Fails closed.	a. Charging and Volume Control - letdown flow.	a. Failure inhibits use of the excess letdown fluid system of the CVCS as an alternate system that may be used for letdown flow control during normal plant operation and inhibits use of the excess letdown system to control water level in the pressurizer of the RCS during final stage of plant startup due to flow blockage.	a. Same method of detection as those stated for item #23, failure mode "Fails closed" except for valve position indication at CB.	1. Same remarks as those stated above for item #23 except for remark #3.

TABLE 9.3-5 (Cont'd)

COMPONENT	FAILURE MODE	CVCS OPERATION FUNCTION	EFFECT ON SYSTEM OPERATION AND SHUTDOWN	FAILURE DETECTION METHOD	REMARKS
	b. Fails open	b. Charging and Volume Control - letdown flow.	b. Failure prevents manual adjustment at CB of RCS system pressure downstream of excess letdown heat exchanger to a low pressure consistent with No. 1 seal leak-off backpressure requirements. When using excess letdown system, failure leads to a decrease in seal water pump shaft flow for cooling pump bearings.	b. Excess letdown heat exchanger outlet pressure indication (PI-124) at CB, and seal water return flow recording (FR-156) and low flow alarm at CB.	
26. Air diaphragm operated diaphragm valve 1CV181 1CV180 1CV179 1CV178	a. Fails closed.	a. Charging and Volume Control - seal water flow.	a. No automatic makeup of seal water to seal standpipe that services No. 3 seal of RC pump #1. No effect on operation to bring the plant to hot standby condition.	a. Valve position indication (closed to open position change) and low standpipe level alarm at CB.	1. Same remark as that stated for item #7 in regards to valve design. 2. Low level standpipe alarm conservatively set

TABLE 9.3-5 (Cont'd)

COMPONENT	FAILURE MODE	CVCS OPERATION FUNCTION	EFFECT ON SYSTEM OPERATION AND SHUTDOWN	FAILURE DETECTION METHOD	REMARKS
	b. Fails open.	b. Charging and Volume Control - seal water flow.	b. Overfill of seal water standpipe and dumping of reactor makeup water to containment sump during automatic makeup of water for No. 3 seal of RC pump #1. No effect on operations to bring reactor hot standby condition.	b. Valve position indication (open to closed position change) and high standpipe level alarm at CB.	to allow additional time for RC pump operation without a complete loss of seal water from being injected to No. 3 seal after sounding of alarm.
27. Relief valve 1CV8121	a. Fails open.	a. Charging and Volume Control - seal water flow.	a. RC pump seal water return flow and excess letdown flow bypassed to PRZ relief tank of RCS. Failure inhibits use of the excess letdown fluid system of the CVCS as an alternate system that may be used for letdown flow control during normal plant operation and inhibits use of excess letdown system to control water level in the PRZ of the RCS during final stage of a plant startup.	a. Decrease in VCT level causing RMCS of CVCS to operate.	1. The capacity of the relief valve equals maximum flow from four RC pump seals plus excess letdown flow. 2. Radioactive fluid contained. 3. Same as remark #2 noted for item #23.

TABLE 9.3-5 (Cont'd)

COMPONENT	FAILURE MODE	CVCS OPERATION FUNCTION	EFFECT ON SYSTEM OPERATION AND SHUTDOWN	FAILURE DETECTION METHOD	REMARKS
28. Motor operated globe valve 1CV8112-1 (1CV8100-2 analogous)	a. Fails open.	a. Charging and Volume Control - seal water flow and excess letdown flow.	a. Failure has no effect on CVCS operation during normal plant operation and load follow. However, under accident conditions requiring containment isolation, failure reduces redundancy of providing isolation of seal water flow and excess letdown flow.	a. Valve position indicate (open to closed position change) at CB.	1. Valve is normally at a full open position and motor operator is energized to close the valve upon the generation of an ESF "T" signal. 2. If normal letdown and excess letdown flow is not available for hot standby operation, plant operator can borate RCS to hot standby concentration using steam space in PRZ.
	b. Fails closed.	b. Charging and Volume Control - seal water flow and excess letdown flow.	b. RC pump seal water return flow and excess letdown flow blocked. Failure inhibits use of the excess letdown fluid system of the CVCS as an alternate system that may be used for letdown flow control during normal plant operation and degrades cooling capability of seal water in cooling RC pump bearings.	b. Valve position indication (closed to open position change) at CB; group monitoring light and alarm at CB; and seal water return flow recording (FR-157) and low seal water return flow alarm at CB.	

TABLE 9.3-5 (Cont'd)

COMPONENT	FAILURE MODE	CVCS OPERATION FUNCTION	EFFECT ON SYSTEM OPERATION AND SHUTDOWN	FAILURE DETECTION METHOD	REMARKS
29. Motor operated gate valve 1CV8105-2 (1CV8106-1 analogous)	a. Fails open.	a. Charging and Volume Control - charging flow.	a. Failure has no effect on CVCS operation during normal plant operation and load follow. However, under accident condition requiring isolation of charging line, failure reduces redundancy of providing isolation of normal charging flow.	a. Valve position indication (open to closed position change) at CB.	1. Valve is normally at a full open position and motor operator is energized to close the valve upon the generation of a Safety Injection "S" signal.
	b. Fails closed.	b. Charging and Volume Control - charging flow.	b. Failure inhibits use of normal charging line to RCS for boration, dilution, and coolant makeup operations. Seal water injection path remains available for boration of RCS to a hot standby concentration level and makeup of coolant during operations to bring the reactor to hot standby condition.	b. Valve position indication (closed to open position change) and group monitoring light (valve closed) at CB; letdown temperature indication (TI-127) and high temperature alarm at CB; charging flow temperature indication (TI-126) at CB; seal water flow pressure indication	

TABLE 9.3-5 (Cont'd)

COMPONENT	FAILURE MODE	CVCS OPERATION FUNCTION	EFFECT ON SYSTEM OPERATION AND SHUTDOWN	FAILURE DETECTION METHOD	REMARKS
				(PI-120A) at CB; VCT level indication (LI-112) and high level alarm (Boron Dilution Alert or High-High Level) at CB.	
30. Air diaphragm operated globe valve 1CV-HCV-182	a. Fails open.	a. Charging and Volume Control - charging flow and seal water flow.	a. Failure prevents manual adjustment at CB of seal water flow through the control of back pressure in charging header resulting in a reduction of flow to RC pump seals leading to a reduction in flow to RCS via labyrinth seals and pump shaft flow for cooling pump shaft flow for cooling pump bearings. Boration of RCS to a hot standby concentration level and makeup of coolant during operations to bring reactor to hot standby condition is still possible through normal charging flow path.	a. Seal water flow pressure indication (PI-120A) at CB; seal water return recording (FR-157; and low seal water return flow alarm at CB.	1. Same remark as that stated for item #4 in regards to design of valve.

TABLE 9.3-5 (Cont'd)

COMPONENT	FAILURE MODE	CVCS OPERATION FUNCTION	EFFECT ON SYSTEM OPERATION AND SHUTDOWN	FAILURE DETECTION METHOD	REMARKS
	b. Fails closed.	b. Charging and Volume Control - charging flow.	b. Same effect on system operation as that stated for item #28, failure mode "Fails closed."	b. Same method of detection as those stated above for item #28, failure mode "Fails closed."	
31. Motor operated globe valve 1CV8110-1 (1CV8111-2 analogous)	a. Fails open.	a. Charging and Volume Control - charging flow and seal water flow.	a. Failure has no effect on CVCS operation during normal plant operation and load follow. However, under accident condition requiring isolation of centrifugal charging pump miniflow line, failure reduces redundancy of providing isolation of miniflow to suction of pump via seal water heat exchanger.	a. Valve position indication (open to closed position change) at CB.	1. Same remark as that stated for item #28. 2. Constant displacement charging pump is normally used to deliver charging and seal water flow.
	b. Fails closed.	b. Charging and Volume Control - charging flow and seal water flow.	b. Failure blocks miniflow to suction of centrifugal charging pumps via seal water heat exchanger. Normal charging flow and seal water flow prevents deadheading of	b. Valve position indication (closed to open position change) at CB; group monitoring light (valve closed) and alarm at CB;	

TABLE 9.3-5 (Cont'd)

COMPONENT	FAILURE MODE	CVCS OPERATION FUNCTION	EFFECT ON SYSTEM OPERATION AND SHUTDOWN	FAILURE DETECTION METHOD	REMARKS
			pumps when used. Boration of RCS to a hot standby concentration level and makeup of coolant during operations to bring reactor to hot standby condition is still possible.	and charging and seal water flow indication (FI-121A) and high flow alarm at CB.	
32. Air diaphragm operated globe valve 1CV8146	a. Fails open.	a. Charging and Volume Control - charging flow.	a. Failure has no effect on CVCS operation during normal plant operation, load follow and hot standby operation. Valve is used during cold shutdown operation to isolate normal charging line when using the auxiliary spray during the cooldown of the pressurizer. Cold shutdown of reactor is still possible, however, time for cooling down PRZ will be extended.	a. Valve position indication (open to closed position change) at CB.	1. Same remarks as that stated for item #4 in regards to design of valve.
	b. Fails closed.	b. Charging and Volume Control - charging flow.	b. Failure blocks normal charging flow to the RCS. No effect on CVCS operations during	a. Valve position indication (closed to open position change)	

TABLE 9.3-5 (Cont'd)

COMPONENT	FAILURE MODE	CVCS OPERATION FUNCTION	EFFECT ON SYSTEM OPERATION AND SHUTDOWN	FAILURE DETECTION METHOD	REMARKS
			normal plant operation, load follow or hot standby operation. Plant operator can maintain charging flow by establishing flow through alternate charging path by opening of isolation valve (1CV8147).	at CB; charging flow indication (TI-126) at CB; regenerative heat exchanger shell side exit temperature indication (TI-127) and high temperature alarm at CB; and charging and seal water flow indication (FI-121A) and low flow alarm at CB.	
33. Air diaphragm operated globe valve 1CV8147	a. Fails closed.	a. Charging and Volume Control - charging flow.	a. Failure reduces redundancy of charging flow paths to RCS. No effect on CVCS operations during normal plant operation, load follow, or hot standby operation. Normal charging flow path remains available for charging flow.	a. Valve position indication (closed to open position change) at CB.	1. Same remark as that stated for item #4 in regards to design of valve.

TABLE 9.3-5 (Cont'd)

COMPONENT	FAILURE MODE	CVCS OPERATION FUNCTION	EFFECT ON SYSTEM OPERATION AND SHUTDOWN	FAILURE DETECTION METHOD	REMARKS
	b. Fails open.	b. Charging and Volume Control - charging flow.	b. Same effect on system operation and shutdown as that stated above for item #31, failure mode "Fails open" if alternate charging line is in use.	b. Valve position indication (open to closed position change) at CB.	
34. Air diaphragm operated globe valve 1CV8145	a. Fails open.	a. Charging and Volume Control - charging flow.	a. Failure results in advertent operation of auxiliary spray that results in a reduction of PRZ pressure during normal plant operation and load follow. PRZ heaters operate to maintain required PRZ pressure. Boration of RCS to a hot standby concentration level and makeup of coolant during operation to bring reactor to hot standby condition is still possible.	a. Valve position indication (open to closed position change) at CB and PRZ pressure recording (PR-455) and low pressure alarm at CB.	1. Same remark as that stated for item #7 in regards to design of valve.
	b. Fails closed.	b. Charging and Volume Control - charging flow.	b. Failure has no effect on CVCS operation during normal plant operation, load follow and hot standby operation. Valve is used during	b. Valve position indication (closed to open position change) at CB.	

TABLE 9.3-5 (Cont'd)

COMPONENT	FAILURE MODE	CVCS OPERATION FUNCTION	EFFECT ON SYSTEM OPERATION AND SHUTDOWN	FAILURE DETECTION METHOD	REMARKS
			cold shutdown operation to activate auxiliary spray for cooling down the pressurizer after operation of RHRS.		
35. Relief Valve 1CV8123	a. Fails open.	a. Charging and Volume Control - charging flow.	a. Failure results in a portion of seal water return flow and centrifugal charging pump miniflow being bypassed to VCT. Boration of RCS to a hot standby concentration level and makeup of coolant during operations to bring reactor to hot standby condition is still possible.	a. Local pressure indication (PI-118 and PI-119) in discharge line of centrifugal charging pumps.	1. Radioactive fluid contained.
36. Relief Valve 1CV8118	a. Fails open.	a. Charging and Volume Control - charging flow and seal water.	a. Failure results in a portion of charging flow and seal water from positive displacement pump being bypassed to VCT. No effect on normal plant operation, load follow or bringing reactor to hot standby condition.	a. Local pressure indication (PI-117) in discharge line of positive displacement pump.	1. Positive displacement pump may be flow isolation by closing of manual gate valves in discharge and suction lines of pump.

TABLE 9.3-5 (Cont'd)

COMPONENT	FAILURE MODE	CVCS OPERATION FUNCTION	EFFECT ON SYSTEM OPERATION AND SHUTDOWN	FAILURE DETECTION METHOD	REMARKS
			Positive displacement pump may be taken out of service and an alternate centrifugal charging pump used for delivery of charging and seal water flow.		2. Radioactive fluid contained.
37. Air diaphragm operated globe valve 1CVFCV-121	a. Fails open.	a. Charging and Volume Control - charging flow and seal water flow.	a. Failure reduces redundancy of providing charging and seal water flow to RCS. No effect on normal plant operation, load follow, or bringing reactor to hot standby condition.	a. Charging and seal water flow indication (FI-121A) and high flow alarm at CB, and PRZ level recording (LR-459) and high alarm at CB.	1. Same remark as that stated for item #4 in regards to design of valve. 2. Methods of detection apply when a centrifugal charging pump is in operation.

TABLE 9.3-5 (Cont'd)

COMPONENT	FAILURE MODE	CVCS OPERATION FUNCTION	EFFECT ON SYSTEM OPERATION AND SHUTDOWN	FAILURE DETECTION METHOD	REMARKS
	b. Fails closed.	b. Charging and Volume Control - charging flow and seal water flow.	b. Failure reduces redundancy of providing charging and seal water flow to RCS. No effect on system operation during normal plant operation, load follow, or bringing reactor to hot standby condition. Valve failing closed under an accident condition requiring flow delivery by centrifugal charging inhibits flow from the pumps.	b. Charging and seal water flow indication (FI-121A) and low flow alarm at CB, and PRZ level recording (LR-459) and low level alarm at CB.	
38. Check valve 1CV8497	a. Fails open.	a. Charging and Volume Control - charging flow and seal water flow.	a. Failure reduces redundancy of providing charging and seal water to RCS. Discharge of positive displacement	a. Charging and seal water flow indication (FI-121A) and low flow alarm at	1. Positive displacement pump may be isolated by the closing of manual valves

TABLE 9.3-5 (Cont'd)

COMPONENT	FAILURE MODE	CVCS OPERATION FUNCTION	EFFECT ON SYSTEM OPERATION AND SHUTDOWN	FAILURE DETECTION METHOD	REMARKS
			pump remains open to "back-flow" when a centrifugal charging pump is placed into operation. No effect on normal plant operation, load follow, or bringing reactor to hot standby condition.	CB, and PRZ level recording (LR-459) and low level alarm at CB.	in pump's suction and discharge lines. 2. Methods of detection apply when centrifugal charging pump #1 is in operation.
39. Check valve 1CV-8481A (1CV-8481B analogous)	a. Fails open.	a. Charging and Volume Control - charging flow and seal water flow.	a. Failure reduces redundancy of providing charging and seal water flow to RCS. Discharge of centrifugal charging pump #1 is open to back-flow" when centrifugal charging pump #2 is placed into operation after failure of centrifugal charging pump #1 to deliver charging and seal water flow. No effect on normal plant operation, load follow, or bringing reactor to hot standby condition.	a. Same methods for detection as those stated above for item #37.	1. Centrifugal charging pump #1 may be isolated by the closing of manual valves in pump's suction and discharge lines.

TABLE 9.3-5 (Cont'd)

COMPONENT	FAILURE MODE	CVCS OPERATION FUNCTION	EFFECT ON SYSTEM OPERATION AND SHUTDOWN	FAILURE DETECTION METHOD	REMARKS
40. Positive displacement pump APPD	a. Fails to deliver working fluid.	a. Charging and Volume Control - charging flow and seal water flow.	a. Failure reduces redundancy of providing charging and seal water flow to RCS. No effect on normal plant operation, load follow, or bringing reactor to hot standby condition. Centrifugal charging pump (#1 or #2) is normally used for delivery of charging and seal water flow.	a. Pump circuit breaker position indication (open) at CB; common pump breaker trip alarm at CB; charging and seal water flow indication (FI-121A) and low flow alarm at CB; and PRZ level recording (LR-459) and low level alarm at CB.	1. Pump speed is regulated to control amount of charging flow delivered to the PRZ.
41. Centrifugal charging pump #1 APCH (Pump #2 analogous)	a. Fails to deliver working fluid.	a. Charging and Volume Control - charging flow and seal water flow.	a. Failure reduces redundancy of providing charging and seal water flow to RCS. Alternate delivery of charging and seal water flow by a centrifugal charging pump not available. No effect on normal plant operation, load	a. Same methods of detection as those stated above for item #39 when centrifugal charging pump #1 is in operation. In addition, monitor light	1. Flow rate of a centrifugal charging pump is controlled by a modulating valve (1CV-FCV-121) in discharge header for the centrifugal charging pumps.

TABLE 9.3-5 (Cont'd)

COMPONENT	FAILURE MODE	CVCS OPERATION FUNCTION	EFFECT ON SYSTEM OPERATION AND SHUTDOWN	FAILURE DETECTION METHOD	REMARKS
			follow, or bringing reactor to hot standby condition.	for group monitoring of components at CB.	
42. Air diaphragm operated globe valve 1CV8156	a. Fails closed.	a. Chemical Control Purification and Makeup - oxygen control.	a. Failure blocks hydrogen flow to VCT resulting in loss of gas stripping of fission products from RCS coolant. No effect on operation to bring the reactor to hot standby condition.	a. VCT pressure indication (PI-115) and periodic sampling of gas mixture in VCT.	1. Plant's technical specification sets limits on RCS activity level.
43. Relief valve 1CV8120	a. Fails open.	a. Charging and Volume Control - charging flow and seal water flow.	a. Failure allows VCT liquid to be relieved to BRS recycle holdup tank resulting in a loss of VCT liquid and makeup coolant available for charging and seal water flow during normal plant operation, load follow, and bringing the reactor to a hot standby condition. VCT isolation valves	a. Decrease in VCT level causing RMCS to operate; VCT level indication (LI-112) and low level alarm at CB; and BRS recycle holdup tank level increase.	1. Radioactive fluid contained.

TABLE 9.3-5 (Cont'd)

COMPONENT	FAILURE MODE	CVCS OPERATION FUNCTION	EFFECT ON SYSTEM OPERATION AND SHUTDOWN	FAILURE DETECTION METHOD	REMARKS
			(1CVLCV-112B and 1CV-LCV-112C) close on low water level tank level signal causing the suction of charging pumps to be transferred to the RWST for an alternate supply of borated (2300 ppm) coolant.		
44. Motor operated gate valve 1CVLCV-112B (1CVLCV-112C2 analogous)	a. Fails open.	a. Charging and Volume Control - charging flow and seal water flow.	a. Failure has no effect on CVCS operation during normal plant operation, load follow, and bringing reactor to a hot standby condition. However, under accident conditions requiring isolation of VCT, failure reduces redundancy of providing isolation for discharge line of VCT.	a. Valve position indication (open to closed position change) at CB.	1. During normal plant operation and load follow valve is at a full open position and the motor operator is energized to close the valve upon the generation of a VCT low water level signal or upon the generation of a Safety Injection "S" signal.

TABLE 9.3-5 (Cont'd)

COMPONENT	FAILURE MODE	CVCS OPERATION FUNCTION	EFFECT ON SYSTEM OPERATION AND SHUTDOWN	FAILURE DETECTION METHOD	REMARKS
	b. Fails closed.	b. Charging and Volume Control - charging flow and seal water flow.	b. Failure blocks fluid flow from VCT during normal plant operation, load follow and when bringing the reactor to a hot standby condition. Alternate supply of borated (2300 ppm) coolant from the RWST to suction of charging pumps can be established from the CB by the operator through the opening of RWST isolation valves (1CVLCV-112D and 1CVLCV-112E).	b. Valve position indication (closed to open position change) at CB; group monitoring light (valve closed) at CB; charging and seal water flow indication (FI-121A) and low flow alarm at CB; and PRZ level recording (LR-459) and low level alarm at CB.	
45. Air diaphragm operated globe valve 1CV8157	a. Fails closed.	a. Chemical Control, Purification and Makeup - oxygen control.	a. Failure blocks venting of VCT gas mixture to gas waste processing system for stripping of fission products from RCS coolant during normal plant operation and load follow. Operator may vent tank using vent lines to gas analyzer by opening isolation valve 1CV8102. No effect on	a. VCT pressure indication (PI-115) and high pressure alarm at CB. Periodic sampling of gas mixture in VCT.	1. Same remark as that stated for item #41 in regards to RCS activity.

TABLE 9.3-5 (Cont'd)

COMPONENT	FAILURE MODE	CVCS OPERATION FUNCTION	EFFECT ON SYSTEM OPERATION AND SHUTDOWN	FAILURE DETECTION METHOD	REMARKS
			operations to bring the reactor to hot standby condition.		
46. Air diaphragm operated diaphragm valve 1FCV-110B	a. Fails closed.	a. Boron Concentration Control - reactor makeup control - boration, auto make-up, and alternate dilution.	a. Failure blocks fluid flow from reactor makeup control system for automatic boric acid addition and reactor water makeup during normal plant operation and load follow. Failure also reduces redundancy of fluid flow paths for dilution of RC coolant by reactor makeup water and blocks fluid flow for boration of the RC coolant when bringing the reactor to a hot standby condition. Boration (at BA tank boron concentration level) of RCS coolant to bring the reactor to hot standby condition is possible by opening of alternate BA tank isolation valve (1CV8104) at CB.	a. Valve position indication (closed to open position change) at CB; total makeup flow deviation alarm at CB; and VCT level indication (LI-112) and low level alarm at CB.	1. Same remark as that stated for item #7 in regards to valve design.

TABLE 9.3-5 (Cont'd)

COMPONENT	FAILURE MODE	CVCS OPERATION FUNCTION	EFFECT ON SYSTEM OPERATION AND SHUTDOWN	FAILURE DETECTION METHOD	REMARKS
	b. Fails open.	b. Boron Concentration Control - reactor makeup control - boration, auto make-up, and alternate dilution.	b. Failure allows for alternate dilute mode type operation for system operation of normal dilution of RCS coolant. No effect on CVCS operation during normal plant operation and load follow, and when bringing the reactor to a hot standby condition.	b. Valve position indication (open to closed position change) at CB.	
47. Air diaphragm operated diaphragm valve 1CVFCV-111B	a. Fails closed.	a. Boron Concentration Control - reactor makeup control - dilution and alternate dilution.	a. Failure blocks fluid flow from RMCS for dilution of RCS coolant during normal plant operation and load follow. No effect on CVCS operation. Operator can dilute RCS coolant by establishing "alternate dilute" mode of system operation. Dilution of RCS coolant not required when bringing the reactor to a hot standby position.	a. Same methods of detection as those stated above for item #45, failure mode, "Fails closed."	1. Same remark as that stated for item #7 in regards to valve design.

TABLE 9.3-5 (Cont'd)

COMPONENT	FAILURE MODE	CVCS OPERATION FUNCTION	EFFECT ON SYSTEM OPERATION AND SHUTDOWN	FAILURE DETECTION METHOD	REMARKS
	b. Fails open.	b. Boron Concentration Control - reactor makeup control - dilution and alternate dilution.	b. Failure allows for alternate dilute mode type operation for system operation of boration and auto makeup of RCS coolant. No effect on CVCS operation during normal plant operation and load follow and when bringing the reactor to a hot standby operation.	b. Valve position indication (open to closed position change) at CB.	
48. Relief Valve 1CV8124	a. Fails open.	a. Charging and Volume Control - charging and seal water flow.	a. Failure allows for a portion of flow to suction header of charging pumps to be relieved to BRS recycle holdup tank. Boration of RCS coolant to bring reactor to hot standby condition is still possible.	a. Decrease in VCT level causing RMCS to operate; VCT level indication (LI-112) and low water level alarm at CB; and BRS recycle holdup tank level increase.	1. Radioactive fluid contained.
49. Air diaphragm operated globe valve 1CVFCV-110A	a. Fails open.	a. Boron Concentration Control - reactor makeup control - boration and auto makeup.	a. Failure prevents the addition of a preselected quantity of concentrated boric acid solution at a	b. Valve position indication (open to closed position change) at CB; and boric	1. Same remarks as that stated for item #4 in regards to valve design.

TABLE 9.3-5 (Cont'd)

COMPONENT	FAILURE MODE	CVCS OPERATION FUNCTION	EFFECT ON SYSTEM OPERATION AND SHUTDOWN	FAILURE DETECTION METHOD	REMARKS
			preselected flow rate to the RCS coolant during normal plant operation, load follow and when bringing the reactor to a hot standby condition. Boration to bring the reactor to a hot standby condition is possible, however, flow rate of solution from BA tanks cannot be automatically controlled.	acid flow recording (FR-110) and flow deviation alarm at CB.	
	b. Fails closed.	b. Boron Concentration Control - reactor makeup control - boration, and auto makeup.	b. Failure blocks fluid flow of boric acid solution from BA tanks during normal plant operation, load follow, and when bringing the reactor to a hot standby condition. Boration (at BA tank boron concentration level) of RCS coolant to bring the reactor to hot standby condition is possible	b. Valve position indication (closed to open position change) at CB; and boric acid flow recording (FR-110) and flow deviation alarm at CB.	

TABLE 9.3-5 (Cont'd)

COMPONENT	FAILURE MODE	CVCS OPERATION FUNCTION	EFFECT ON SYSTEM OPERATION AND SHUTDOWN	FAILURE DETECTION METHOD	REMARKS
			by opening of alternate BA tank isolation valve (1CV8104) at CB.		
50. Air diaphragm operated globe valve 1CVFCV-111A	a. Fails closed.	a. Boron Concentration Control - reactor makeup control - dilute, alternate dilute and auto makeup.	a. Failure blocks fluid flow of water from reactor makeup control system during normal plant operation and load follow. No effect on system operation when bringing the reactor to a hot standby condition.	a. Valve position indication (closed to open position change) at CB; VCT level indication (LI-112) and low water level alarm at CB; and makeup water flow recording (FR-110) and flow deviation alarm at CB.	1. Same remark as that stated for item #7 in regards to valve design.
	b. Fails open.	b. Boron Concentration Control - reactor makeup control - dilute, alternate dilute and auto makeup.	b. Failure prevents the addition of a preselected quantity of water makeup at a preselected flow rate to the RCS coolant during normal plant operation and load follow. No effect on system operation when bringing the reactor to a hot standby condition.	b. Valve position indication (open to closed position change) at CB and makeup flow recording (FR-110) and flow deviation alarm at CB.	

TABLE 9.3-5 (Cont'd)

COMPONENT	FAILURE MODE	CVCS OPERATION FUNCTION	EFFECT ON SYSTEM OPERATION AND SHUTDOWN	FAILURE DETECTION METHOD	REMARKS
51. Motor operated globe valve 1CV8104	a. Fails closed.	a. Boron Concentration Control - reactor makeup control - boration and auto makeup.	a. Failure reduces redundancy of flow paths for supplying boric acid solution from BA tanks to RCS via charging pumps. No effect on CVCS operation during normal plant operation, load follow, or hot standby operation. Normal flow path via RMCS remains available for boration of RCS coolant.	a. Valve position indication (closed to open position change) at CB and flow indication (FI-183A) at CB.	1. Valve is at a closed position during normal RMCS operation. 2. If both flow paths from BA tanks are blocked due to failure of isolation valves (1CVFCV-110A and 1CV8104), borated water (2300 ppm) from RWST is available opening isolation valve 1CV-LCV-1120 or 1CV-LCV-112E.
	b. Fails open.	b. Boron Concentration Control - reactor makeup control - boration and auto makeup.	b. Failure prevents the addition of a preselected quantity of concentrated boric acid solution at a preselected flow rate to the RCS coolant during normal plant operation, load follow and when bringing the reactor to a hot standby condition. Boration to bring the reactor to a	b. Valve position indication (open to closed position change) at CB and flow indication (FI-183A) at CB.	

TABLE 9.3-5 (Cont'd)

COMPONENT	FAILURE MODE	CVCS OPERATION FUNCTION	EFFECT ON SYSTEM OPERATION AND SHUTDOWN	FAILURE DETECTION METHOD	REMARKS
			hot standby condition, is possible, however, flow rate of solution from BA tanks cannot be automatically controlled.		
52. Boric acid transfer pump #1 APBA (BA transfer pump #3 analogous)	a. Fails to deliver working fluid.	a. Boron Concentration Control - reactor makeup control - boration and auto makeup.	a. No effect on CVCS system operation during normal plant operation, load follow or bringing reactor to hot standby condition. Alternate BA transfer pump #2 may be used to provide necessary delivery of working fluid for CVCS system operation.	a. Pump motor start relay position indication (open) at CB and local pump discharge pressure indication (PI-113).	1. The Unit 1 BA transfer pump provides boric acid for Unit 1 and the Unit 2 BA transfer pump provides boric acid for Unit 2. A Unit common BA transfer pump is used as a replacement for either pump. Operator action is required to place the Unit common pump in service.
53. Air diaphragm operated three-way valve 1CVLCV-112A	a. Fails open for flow only to BRS recycle holdup tank.	a. Charging and Volume Control - letdown flow.	a. Failure bypasses normal letdown flow to BRS recycle holdup tank resulting in excessive use of RMCS.	a. Valve position and alarm (Holdup Tank) at CB; VCT water level indication (LI-112) and low	1. Valve is designed to fail open for flow to VCT and is electrically wired so that

TABLE 9.3-5 (Cont'd)

COMPONENT	FAILURE MODE	CVCS OPERATION FUNCTION	EFFECT ON SYSTEM OPERATION AND SHUTDOWN	FAILURE DETECTION METHOD	REMARKS
			No effect on operation to bring reactor to hot standby condition.	level at CB; and increase water level in BRS recycle hold up tank.	electrical control solenoids for valve are energized for flow to BRS recycle holdup tank. Valve opens to flow to BRS recycle holdup tank on high VCT water level signal.
54. Air diaphragm operated diaphragm valve 1BR7046	a. Fails closed.	a. Boron Concentration Control - boron thermal regeneration.	a. Failure inhibits use of BTRS for load follow operation (boration) due to flow blockage of BTR demineralizers return flow. Alternate boration of reactor coolant for load follow may be accomplished using RMCS of CVCS. No effect on operations to bring reactor to hot standby condition.	a. RCS boron level when sampling letdown flow. If BTRS is operating, BTRS operation indication (borate) at CB and low BTR demineralizer return flow indication (FI-385) at CB.	1. Same remark as that for item #7 in regards to valve design.

TABLE 9.3-5 (Cont'd)

COMPONENT	FAILURE MODE	CVCS OPERATION FUNCTION	EFFECT ON SYSTEM OPERATION AND SHUTDOWN	FAILURE DETECTION METHOD	REMARKS
	b. Fails open.	b. Boron Concentration Control - boron storage.	b. Failure inhibits use of BTRS for load follow operation (dilution) due to flow bypass of BTR demineralizers. Alternate dilution of reactor coolant for load follow may be accomplished using RMCS of CVCS. No effect on operation to bring reactor to hot standby condition.	b. RCS boron level when sampling letdown flow. If BTRS is operating, BTRS operation indication (dilute) at CB.	
55. Air diaphragm operated globe valve 1CV8401A (1CV8401B analogous)	a. Fails closed.	a. Charging and Volume Control - letdown flow.	a. Failure reduces redundancy of letdown heat exchanger loops provided for cooling of letdown flow. No effect on system operation. Alternate letdown heat exchanger loop may be used for cooling by opening of isolation valve 1CV8401B.	a. Valve position indication (closed to open position change) at CB; letdown flow indication (FI-132) at CB; and letdown flow pressure indication (PI-131) at CB.	1. Same remark as that stated for Item #7 in regards to valve design. 2. Operator action is required to place letdown change #2 in service
56. Air diaphragm operated globe valve 1CV8389A (1CV8389B analogous)	a. Fails closed.	a. Charging and Volume Control - letdown flow.	a. Failure reduces redundancy of regenerative heat exchanger loops provided for cooling of letdown flow and	a. Valve position indication (closed to open position change) at CB; letdown	1. Same remark as that stated for item #7 in regards to valve design.

TABLE 9.3-5 (Cont'd)

COMPONENT	FAILURE MODE	CVCS OPERATION FUNCTION	EFFECT ON SYSTEM OPERATION AND SHUTDOWN	FAILURE DETECTION METHOD	REMARKS
			heating of charging flow. No effect on system operation. Alternate heat exchanger loop may be used for cooling of letdown flow and heating of charging flow by opening of isolation valves 1CV8389B and 1CV8324B.	flow temperature indication (TI-127) at CB; and letdown flow indication (FI-132) and pressure indication (PI-132) at CB.	2. Operator action is required to place regenerative heat exchanger #2 in service.
57. Air Diaphragm operated globe valve 1CV8324A (1CV8324B analogous)	a. Fails closed.	a. Chemical and Volume Control - charging flow.	a. Same effect on system operation as that stated above for item #55.	a. Valve position indication (closed to open position change) at CB and letdown flow temperature indication (TI-127) and high temperature alarm at CB.	1. Same remarks as those stated above for item #55.
58. Check Valve 1CV8440	a. Fails open.	a. Charging and Volume Control - charging flow and seal water flow.	a. Failure has no effect on CVCS operation during normal plant operation, load follow, and bringing reactor to a hot standby condition. However, under accident conditions requiring isolation of VCT, failure reduces redundancy of	a. VCT level indication (1LI-112) and high level alarm (Boron Dilution Alert or High-High Level) at CB.	

TABLE 9.3-5 (Cont'd)

COMPONENT	FAILURE MODE	CVCS OPERATION FUNCTION	EFFECT ON SYSTEM OPERATION AND SHUTDOWN	FAILURE DETECTION METHOD	REMARKS
			providing isolation for discharge line of VCT. Under certain accident conditions requiring recirc. flow, failure of the valve could result in a leak path to the VCT via the seal water heat exchanger relief valve. Operator action is required to manually isolate this leak path. (Close 1CV8398B or 1CV8484.)		
	b. Fails closed.	b. Charging and Volume Control - charging flow and seal water flow	b. Same effect on system operation as that stated above for item 44b. Fails closed.	b. Charging and seal water flow indication (FI-121A) and low flow alarm at CB, and Pzr level recording (LR-459) and low level alarm at CB.	

TABLE 9.3-5 (Cont'd)

LIST OF ACRONYMS AND ABBREVIATIONS
USED IN TABLE 9.3-5

BA	-	Boric Acid
BRS	-	Boron Recycle System
BTR	-	Boron Thermal Regeneration
BTRS	-	Boron Thermal Regeneration System
CB	-	Control Board
CVCS	-	Chemical and Volume Control System
Demin.	-	Demineralizer
HX	-	Heat Exchanger
PRZ	-	Pressurizer
RC	-	Reactor Coolant
RCS	-	Reactor Coolant System
RHRS	-	Residual Heat Removal System
RWST	-	Refueling Water Storage Tank
RMCS	-	Reactor Makeup Control System
VCT	-	Volume Control Tank

TABLE 9.3-6

MAXIMUM EXPECTED CONCENTRATIONS

IN LABORATORY SAMPLES (μCi/cc)*

ISOTOPE	DILUTED** PRIMARY COOLANT	STRIP*** GAS SAMPLE	CONTAINMENT*** AIR SAMPLE
Kr*85	___	477	201
Kr85	___	29.5	12.4
Rb88	126	___	___
Sr89	2.14	___	___
Sr90	.20	___	___
Y90	3.70	___	___
Zr95	5.19	___	___
Mo99	5.28	___	___
I131	158	79.0	33.3
TE132	4.40	___	___
I132	166	83.0	35.0
I133	231	116	48.8
Xe133	___	5950	2500
Cs134	.11	___	___
Xe135	___	1350	572
Cs137	.30	___	___
Entire Sample	1490.	10450.	4410.

* One hour after shutdown, postaccident with 100% cladding failure and Regulatory Guides 1.4 and 1.7 source

** Stripped primary coolant that is diluted by a factor of 1000

*** 100% core nobles and 2.5% of core halogens

TABLE 9.3-7

SUMMARY OF ESTIMATED INTEGRATED DOSES

87 ml DILUTED REACTOR COOLANT SAMPLE PROCEDURE*

(Assumes one individual performs all tasks)

STEP	TIME REQUIRED (min)	DOSE RATE RANGE (mrem/hr)	WHOLE BODY DOSE (mrem)	EXTREMITIES DOSE (mrem)
Assemble and instruct trained personnel	7.5	0	0.0	0.0
Purge** incoming lines to the panel	7.9	0-142	18.9	25
Purge** the panel to sampling	3.7	142-264	16.1	25
Fill the 100 ml bottle (87 ml)	3.2	264-321	17.1	25
Isolate the bottle within the cask	0.5	321	2.7	6
Pull cart and close lid	0.1	30	0.1	0.5
Flush the activity from the panel	17.1	321-0	23.2	30
Deliver samples to lab	< 20	10-1	1.0	1.0
TOTALS	60.0***		79.1	102.5

* Dilution is 10^{-3} times a degassed design basis primary coolant sample. The contact for 1 ml of this liquid should be less than 5 rem/hr and 200 mrem/hr at 10 centimeters.

** With primary coolant.

*** The estimated maximum time is 90 minutes. The extra 30 minutes is to allow for contingencies, i.e., loss of offsite power.

9.4 AIR CONDITIONING, HEATING, COOLING, AND VENTILATION SYSTEMS

9.4.1 Control Room HVAC System

The control room HVAC system is common to both Units 1 and 2 and serves the main control room (Units 1 and 2), auxiliary electric equipment rooms, upper cable spreading rooms, HVAC equipment room, security control center, Shift Manager's office/records room and miscellaneous locker room, toilets, kitchen (Braidwood only), and storage rooms.

9.4.1.1 Design Bases

The control room HVAC system, a Safety Category I system, is designed to provide environmental conditions conducive to habitability and long component life in the control room for both Units 1 and 2 under normal and abnormal station conditions.

9.4.1.1.1 Safety Design Bases

a. The system conforms to NRC General Design Criteria as discussed in Section 3.1.

b. The control room HVAC system is designed with redundancy to meet the single failure criteria.

c. The system monitors radioactive contamination in all makeup air intakes and limits the introduction of potential contaminants into the system by filtering the contaminated air on detection of high radiation. Area radiation monitors are provided in the control room.

d. Upon notification of an offsite chlorine accident at Braidwood, the control room outside air intakes are manually isolated and the HVAC system is operated in 100% recirculation mode, with all return air passing through the charcoal filter.

e. The system monitors products of combustion in makeup air intakes, return ducts from main control boards, and in equipment string mixed air. Ionization detector trips are alarmed in the control room. If ionization products are present in makeup air intakes, the makeup air can be switched to a redundant equipment string utilizing a remote intake. Provision is made to permit the operator to purge all spaces served by the control room HVAC system with 100% outside air unless radioactivity in excess of detector setpoints is present in intakes, or if an ESF signal is present.

f. The system is seismically designed with the exception of heating and humidification equipment, the

security computer A/C unit, and the kitchen (Braidwood only), toilet, and locker room exhaust fans, filters, and recirculation filter units which are seismically supported but may not function after SSE. This equipment is not needed to meet the habitability criteria or the equipment environmental criteria.

g. The Safety Category 1 equipment is powered from redundant ESF buses; the instrumentation and power supply to the system is described in Subsection 7.3.1.1.9 and Chapter 8.0.

h. The control room HVAC system is provided with 6000 cfm of makeup air except during the 100% outdoor air purge mode and (Braidwood only) chlorine isolation mode. This quantity of outside air is sufficient to maintain the Control Room Envelope (CRE) at a positive pressure with respect to areas adjacent to the CRE to minimize unfiltered inleakage. The positive pressure inside the control room envelope minimizes infiltration of potentially contaminated air from adjacent areas.

i. All the equipment, ducts, and accessories for the control room HVAC system are housed in a missile protected structure. The makeup air intake openings are also missile protected.

j. The control room HVAC system serves only essential areas in the habitability envelope and therefore, isolation devices to isolate nonessential areas of the system are not applicable and not provided.

9.4.1.1.2 Power Generation Design Bases

The control room HVAC system is designed to provide a controlled temperature of 75° ± 2° and a relative humidity of 20% to 60% in the control room, auxiliary electric equipment rooms, kitchen (Braidwood only), record room, storage room, and security control center. The control room HVAC system maintains the control room environment for personnel comfort and ensures that a temperature of 90° is not exceeded for equipment concerns. The upper cablespreading room ambients are expected to fluctuate between 65° and 90°, 20% relative humidity and 70% relative humidity depending on outside temperatures. Additional details on environmental conditions are contained in Section 3.11.

9.4.1.2 System Description

The design of the control room HVAC system is shown on the piping and instrumentation diagrams, Drawing M-96.

a. The control room HVAC system is comprised of two full capacity, redundant equipment trains, each located in separate HVAC equipment rooms. During normal operation the minimum outside air quantity is induced through an outside air intake to the return air ductwork where it is mixed with return air from all spaces. Particulates are removed from mixed air as it passes through high efficiency filters on its way to the operating supply fan inlet. The supply fan discharges air through the chilled water cooling coil cabinet into the main supply duct header. If required, heat is added to supply air in this header by a non-safety-related electric blast coil.

   Tempered air is distributed in the Unit 1 and Unit 2 branch supply ducts via the main supply duct header which interconnects the Unit 1 and Unit 2 equipment trains with suitable isolation dampers. An electric heating coil and humidifier manifold is provided in each equipment string main supply duct to maintain controlled space temperatures and humidities. Local electric reheat coils are provided for certain ancillary rooms to enhance temperature control.

   Return air is induced from the spaces through main control boards and return registers to a branch return duct network through a main return duct header (which also is interconnected to Unit 1 and Unit 2 equipment trains with suitable isolation dampers) to the suction of the operating return fan which discharges the return air to the mixed air plenum.

b. Each equipment train is connected to two missile protected makeup air intakes: an outside air intake and a turbine building air intake. The outside air intake is the preferred makeup source and is sized to provide normal minimum flow (6,000 cfm). Full supply flow (49,500 cfm) for purging purposes is provided via the maximum outdoor air intake.

   Each turbine building intake is an alternate intake for minimum flow only and is used during abnormal conditions if radiation in the outside air intake exceeds instrument setpoints. Each turbine building air intake is directly connected to an emergency makeup filter unit which removes potentially radioactive particulates and inorganic and organic forms of iodine from the airstream.

Low leakage motor-operated butterfly isolation dampers are also provided for each turbine building intake. Emergency makeup filter units are described in detail in Subsection 6.5.1.

Two radiation monitors, and two ionization detectors are located in each outdoor air intake plenum. The discharge of the emergency makeup filter unit contains two radiation monitors.

Double isolation dampers (including one bubbletight damper) are provided on minimum makeup air paths since these are open during normal operation. Maximum outdoor air paths (supply and exhaust) are closed except in the very unlikely event that there is a fire in the control room envelope. Bubble tight isolation dampers are provided on the maximum outside air paths. These are normally closed fail-closed dampers. At Braidwood, these dampers are blocked closed via a bolted configuration. These blocks can be removed, and the dampers can be opened manually should a main control room purge be required.

c. Each equipment train return fan discharge is connected to a missile protected relief opening to the turbine building. Whenever the operator chooses to purge the spaces served by the control room HVAC system with 100% outside air, the return air from these spaces is exhausted to the turbine building through this opening. The opening is provided with a bubble-tight motor-operated damper which is normally closed and will fail close on loss of power. At Braidwood, this damper is blocked closed via a bolted configuration. This block can be removed, and the dampers can be opened manually should a main control room purge be required.

d. Upstream of the supply air fan, a charcoal adsorber is provided which is normally bypassed. The mixed air is automatically routed through this adsorber whenever radiation levels in the makeup air exceed detector setpoints and whenever the mixed air duct ionization detector is actuated.

e. The source of cooling for each control room HVAC system equipment train is a corresponding control room chilled water equipment string which is described in detail in Subsection 9.2.7.

f. A non-safety-related full capacity electric steam generator is provided for each equipment string and is connected to a main duct mounted humidifier manifold and control valve.

g. Electric and electronic controls and instrumentation are used for the control room HVAC system. Each equipment train has a local control panel and important operating functions are monitored in the main control room. Abnormal conditions, i.e., high radiation detection at makeup air intakes and

ionization detection in return air ducts are annunciated on the main control board. Refer to Section 7.3 for a detailed description of the control and instrumentation of the control room HVAC system.

h. Water deluge valves connected to the station fire protection system are provided for the charcoal adsorber bed in the makeup air filter trains and normally bypassed charcoal adsorber in the supply air filter trains. These are described in Subsection 6.5.1.

i. All automatic isolation and control dampers are driven by spring loaded electric powered operators which fail safe on the loss of electric power or control signal.

9.4.1.3 Safety Evaluation

a. The control room HVAC system is designed to ensure control of space environment conditions within specified maximum and minimum limits (see Table 3.11-2) which are conducive to personnel habitability and prolonged service life of Safety Category I components under all normal and abnormal station operating conditions.

   Redundant equipment is provided where needed to ensure system function. Power for the redundant equipment is supplied from separate ESF buses which are energized during all normal and abnormal conditions. All of the HVAC equipment and surrounding structures are seismically designed except heating and humidification equipment which are only seismically supported. A system failure analysis is presented in Table 9.4-2.

b. Flood protection for this system is not applicable.

c. A local fire in the control room should not cause the abandonment of the control room because early detection, filtration, and purging capabilities are provided in addition to local fire fighting apparatus.

d. Air distribution in the control room is designed to supply air into the occupied area and exhaust approximately half of the supply quantity through the main control boards. In the event of smoke or products of combustion in the control boards, the ionization detection system automatically alarms in the main control room.

Manual control is provided to direct the mixed air through the normally bypassed charcoal adsorber for smoke and odor removal. A manual override is provided for this function as well as the ability to introduce 100% outside air to purge the spaces served by the system.

e. Two radiation monitors are provided in each control room HVAC system outside air makeup air intake to detect high radiation. These monitors alarm in the control room as do area radiation monitors located in the control room. The intake monitors are described in detail in Subsection 11.5.2 and the area monitors are described in Subsection 12.3.4. The high radiation actuation signal causes automatic closure of the normal outside makeup air source to the system and opening of turbine building makeup air intake as well as startup of the emergency makeup air filter unit to clean up the makeup air. In addition, the makeup air and return air are routed through the normally bypassed charcoal adsorber.

f. The control room ventilation system along with the CRE and control room shielding were originally designed to limit the control room operator dose below levels of 5 rem as required by Criterion 19 of 10 CFR 50, Appendix A. Habitability Systems are discussed in Section 6.4.

g. The control room HVAC system is provided with 6000 cfm of makeup air except during the 100% outdoor air purge mode and (Braidwood only) chlorine isolation mode. This quantity of outside air is sufficient to maintain the Control Room Envelope (CRE) at a positive pressure with respect to areas adjacent to the CRE to minimize unfiltered inleakage. The positive pressure inside the control room envelope minimizes infiltration of potentially contaminated air from adjacent areas.

h. (Braidwood only) Upon notification of an offsite chlorine accident, the control room outside air intakes are manually isolated and the HVAC system is operated in 100% recirculation mode, with all return air passing through the charcoal filter.

i. There are no high energy lines in close proximity to or within the control room envelope which will affect the habitability of the control room.

9.4.1.4 Testing and Inspection

All equipment is factory inspected and tested in accordance with the applicable equipment specification, quality assurance requirements, and applicable codes. System ductwork and erection of equipment are inspected during various construction stages for quality assurance. Construction tests are performed on all mechanical components and the system is balanced for the

design airflows and system operating pressures. Controls, interlocks, and safety devices on each system are cold checked, adjusted, and tested to ensure the proper sequence of operation.

Provisions are made for periodic inservice testing of the equipment and filters, as discussed in Section 6.4. The equipment manufacturer's recommendations and station practices are considered in determining required maintenance.

The system is subjected to the factory, preoperational, and subsequent periodic tests described in Subsection 6.4.5. Technical specifications state limiting conditions for system operation and testing requirements.

9.4.2 Spent Fuel Pool Area Ventilation System

The spent fuel pool area ventilation system is part of the auxiliary building ventilation system and is described in Subsections 9.4.5 and 6.5.1.

9.4.3 Auxiliary and Radwaste Area Ventilation Systems

The auxiliary and radwaste area ventilation systems are comprised of the following four systems:

a. radwaste and remote shutdown control room HVAC system,

b. laboratory HVAC system,

c. radwaste building ventilation system, and

d. auxiliary building HVAC system.

9.4.3.1 Radwaste and Remote Shutdown Control Room HVAC System

The radwaste and remote shutdown control room HVAC system is common to both Units 1 and 2. The system serves the control room which contains the radwaste system control panels and the remote shutdown panels, and the associated HVAC equipment room located on elevation 383 feet 0 inch.

9.4.3.1.1 Design Bases

The system is designed to limit the temperature and relative humidity of the radwaste and remote shutdown control room in conformance with the equipment requirements.

9.4.3.1.1.1 Safety Design Basis

The radwaste and remote shutdown control room HVAC system is non-safety-related; therefore, there is no safety design basis.

9.4.3.1.1.2 Power Generation Design Basis

a. The radwaste and remote shutdown control room HVAC system for Units 1 and 2 operate on a year round basis during normal plant operating conditions.

b. The system maintains 75 ± 2°F temperature and 40 ± 5% relative humidity.

c. The system draws approximately 10% of the total supply air from the Auxiliary Building general accessible area elevation 383 feet 0 inch air for odor dilution and area pressurization.

9.4.3.1.2 System Description

a. The schematic design of the radwaste and remote shutdown control room HVAC system is shown in Drawing M-117.

b. The radwaste and remote shutdown control room HVAC system is comprised of a filter bank, an air handling unit, water cooled condensing unit, packaged air conditioning unit, air flow measuring station, electric steam generator, humidifier, return fan, and ductwork. The air handling unit consists of a direct expansion cooling coil and a centrifugal fan.

c. The conditioned air is distributed by supply ducts and a return fan induces the air for recirculation back to the air handling unit.

d. 10% of the total air supplied to the radwaste and remote shutdown control room area is taken from the auxiliary building general accessible area.

e. A water cooled condensing unit, supplied by nonessential service water, is provided for mechanical cooling. Refrigerant is piped from the condensing unit to the direct expansion cooling coil in the supply air handling unit.

f. A packaged air conditioning unit with water-cooled condensing unit (water supplied by nonessential service water) is provided for the Unit 2 remote shutdown control panel area and the radwaste demineralizer panel area.

g. An electric steam generator provides the required steam for the humidifier to maintain 40 ± 5% relative humidity.

h. The supply air is filtered by a 95% efficient filter.

i. Controls and Instrumentation

1. Fans, condensing unit, and electric steam generator are controlled by handswitches located on the local control panel (LCP). Pertinent system, temperature, relative humidity, and differential pressures, are indicated on the LCP. The condensing unit operation is controlled by temperature controller located in the radwaste and remote shutdown control room.

2. Adverse conditions which are important to system operation are annunciated on the LCP, e.g., high differential pressure across filter and fans, low air and water flow conditions, ionization detection, condensing unit trouble, high room temperature, etc.

3. A differential pressure controller maintains a positive pressure between the radwaste and remote shutdown control room and the adjoining auxiliary building area.

4. Controls are pneumatic and electric.

9.4.3.1.3 Safety Evaluation

The radwaste and remote shutdown control room HVAC system is non-safety-related. A failure analysis is presented in Table 9.4-4.

9.4.3.1.4 Inspection and Testing Requirements

All equipment is factory inspected and tested in accordance with the applicable equipment specifications and codes. System ductwork and erection of equipment are inspected during various construction stages. Component demonstration tests are performed on all mechanical components and the system is balanced for the design airflows and system operating temperatures and pressures. Controls, interlocks, and safety devices on each system are checked, adjusted, and tested to ensure the proper sequence of operation. The equipment manufacturer's recommendations and station practices are considered in determining required maintenance.

9.4.3.2 Laboratory HVAC System

The laboratory HVAC system is common to both Units 1 and 2 and functions during normal operating conditions. The system serves the high level laboratory, low level laboratory, HRSS

room, counting room, decontamination room, Byron mask cleaning room, and other related offices located in the auxiliary building at elevation 426 feet 0 inch.

9.4.3.2.1 Design Bases

The laboratory HVAC system maintains comfort conditions in the laboratory and exhausts air through fume hoods and laundry room hood. This exhaust air is filtered of particulates before releasing through Unit 1 vent stack.

9.4.3.2.1.1 Safety Design Basis

The laboratory HVAC system is non-safety-related; therefore, there is no safety design basis.

9.4.3.2.1.2 Power Generation Design Basis

a. The laboratory HVAC system for Units 1 and 2 operates on a year round basis during normal plant operating conditions and maintains an environment suitable for personnel comfort, health, and safety in the laboratory area.

b. The system maintains the laboratory area at 75 ± 2°F and 40 ± 5% relative humidity. The Laboratory HVAC Equipment Room and Laundry Room are maintained at a maximum of 90°F and 40 ± 5% relative humidity.

c. The system induces air through laboratory fume hoods and the laundry room hood; and then filters out particulates before releasing to the atmosphere via the Unit 1 vent stack.

d. On loss of offsite power the system is shut down.

e. A radiation monitor is provided in the exhaust air duct from the laboratory fume hood filter unit. A radiation monitor is also provided in the exhaust air duct downstream of the laundry room hood exhaust fan.

9.4.3.2.2 System Description

a. The schematic design of the laboratory HVAC system is shown in Drawing M-102.

b. The laboratory HVAC system consists of the following supply and exhaust trains:

9.4.3.2.1.2 Power Generation Design Basis

a. The laboratory HVAC system for Units 1 and 2 operates on a year round basis during normal plant operating conditions and maintains an environment suitable for personnel comfort, health, and safety in the laboratory area.

b. The system maintains the laboratory area at 75 ± 2°F and 40 ± 5% relative humidity. The Laboratory HVAC Equipment Room and Laundry Room are maintained at a maximum of 90°F and 40 ± 5% relative humidity.

c. The system induces air through laboratory fume hoods and the laundry room hood; and then filters out particulates before releasing to the atmosphere via the Unit 1 vent stack.

d. On loss of offsite power or high radiation in control room outside air intakes, the system is shut down.

e. A radiation monitor is provided in the exhaust air duct from the laboratory fume hood filter unit. A radiation monitor is also provided in the exhaust air duct downstream of the laundry room hood exhaust fan.

9.4.3.2.2 System Description

a. The schematic design of the laboratory HVAC system is shown in Drawing M-102.

b. The laboratory HVAC system consists of the following supply and exhaust trains:

1. Laboratory Supply Train

   The supply train is dual duct air conditioning unit and consists of outside air intake, filters, hot water preheating coil, two 100% capacity supply fans, humidifier with an electric steam generator, hot water heating coils, and chilled water coils. The dual duct system distributes conditioned air through locally mounted mixing boxes. Two 100% capacity return air fans return air from laboratory offices to the air conditioning unit.

2. Laboratory Exhaust Trains

   The two exhaust train sets are provided as follows:

   a. Fume Hood Exhaust Filter Train

      This train consists of a prefilter, a HEPA filter, and two 100% capacity centrifugal fans.

   b. Laundry Room Exhaust Filter Train

      This train consists of a lint filter, a moisture separator, a prefilter, a HEPA filter, and a centrifugal fan. The laundry room hood exhaust fan discharges air into the filter unit.

c. The laundry room is kept at a slightly negative pressure with respect to all adjacent areas. The area behind the shielded wall of the HRSS room is kept at a negative pressure with respect to the general area of the HRSS room. The decontamination room, mask cleaning room (Byron only), instrument storage room (Braidwood only) are kept at a negative pressure with respect to the adjacent chemistry office area. The high level laboratory is kept at a negative pressure with respect to the counting room, corridor and low level laboratory. The low level laboratory is kept at a negative pressure with respect to the corridor. The counting room is kept at a slightly positive pressure with respect to all adjacent areas.

d. The exhaust from the HRSS room is discharged to the auxiliary building exhaust system which contains charcoal adsorbers.

e. Mechanical cooling is provided by the chilled water coils supplied from the service building chilled water system, described in Subsection 9.2.7.

f. Hot water preheating coil with a booster pump tempers the supply air. A second hot water heating coil in the dual duct system with a modulating valve provides the final heating. Hot water is supplied from the station heating system described in Subsection 9.2.8.

g. Control and Instrumentation

1. System handswitches and controls are provided on the local control panel (LCP). Pertinent system air and water flow rates; temperatures, relative humidity, and differential pressures are indicated on this panel.

2. Failure of a function important to the system operation is annunciated on the LCP, i.e., high differential pressures across filters and fans, ionization detection, low air, and water flow rates, etc.

3. Controls are pneumatic and electric.

4. Exhaust filter units at Braidwood are tripped on a high radiation signal from the radiation detectors located in the control room outside makeup air intake.

9.4.3.2.3 Safety Evaluation

a. The laboratory HVAC system is non-safety-related.

b. A failure analysis is presented in Table 9.4-6.

9.4.3.2.4 Inspection and Testing Requirements

a. All equipment is factory inspected and tested in accordance with the applicable equipment specifications and codes. System ductwork and erection of equipment are inspected during various construction stages. Component demonstration tests are performed on all mechanical components and the system is balanced for the design air and water flows and system operating pressures. Controls, interlocks, and safety devices on each system are checked, adjusted, and tested to ensure the proper sequence of operation.

b. The equipment manufacturer's recommendations and station practices are considered in determining required maintenance.

c. Provisions are made in the fume hood exhaust filter train to allow change out of filters while the system is in operation.

9.4.3.3 Radwaste Building Ventilation System

The radwaste building ventilation system is common to both Units 1 and 2. The system serves the empty drum storage area at elevation 401 feet 0 inch, the high level and low level drum

storage area at elevation 401 feet 0 inch, the truck-dock area at elevation 401 feet 0 inch, and the volume reduction system equipment area at elevation 397 feet 0 inch and elevation 410 feet 0 inch.

9.4.3.3.1 Design Bases

The system is designed to provide protection from radioactive contamination by providing proper airflow patterns from accessible areas to potentially contaminated areas. The system also ensures that the temperature is kept within an allowable range; thereby providing conformance with equipment requirements. The exhaust air from the system is filtered to remove the radioactive particulate before discharge to the outdoor atmosphere.

9.4.3.3.1.1 Safety Design Bases

The radwaste building ventilation system is non-safety-related; therefore, there is no safety design bases.

9.4.3.3.1.2 Power Generation Design Bases

a. The radwaste building ventilation system for Units 1 and 2 operates on a year round basis during normal plant operating conditions.

b. The system is designed to limit the maximum temperature to 104°F for all accessible areas, 122°F for all nonaccessible areas, and a minimum design temperature of 65°F.

c. Pressure differential control dampers are used to maintain negative pressure in the radwaste area by controlling supply air. Negative pressure may not be maintained while trucks are entering or exiting the building. Administrative controls require that no processing of radioactive materials take place during that time. Also, air samples must be taken in the truck bay while the doors are open.

d. The system supplies tempered air to the various radwaste storage areas and volume reduction system equipment areas. Air from potentially contaminated areas of volume reduction system equipment can be exhausted through a charcoal filter unit to the radwaste-auxiliary building transfer tunnel. Air from all other areas is discharged to the tunnel. The air from the tunnel is filtered through prefilters and HEPA filters and discharged to the Unit 2 ventilation stack.

e. Chilled water area coolers are provided to supplement the ventilation system heat removal capacity.

f. On loss of offsite electric power, the system is shut down.

g. Radiation monitors are provided in the exhaust duct to indicate radiation levels prior to discharge to the vent stack. A radiation monitor is provided in the charcoal filter exhaust duct work prior to discharge to the tunnel.

9.4.3.3.2 System Description

a. The schematic design of the radwaste building ventilation system is shown in Drawing M-114.

b. The radwaste building ventilation system consists of the following supply and exhaust trains:

1. Radwaste Building Supply System

Two 100% supply trains are provided, each consisting of an outside air intake, supply filter and air handling unit. The air handling unit is comprised of hot water heating coils, chilled water cooling coils and a supply fan. A booster pump provides positive circulation of hot water. The air handling unit provides supply air to the high level storage area, low level storage area, empty drum storage area and the cubicles of the volume reduction equipment areas. The area coolers consist of chilled water coil, 2-inch throw-away filters and a fan. These are provided for the empty drum storage area, metal detector area, the startup air heater area, radwaste solid package area, and the drumming area. An electric heating coil is provided in the supply duct to drum storage area to maintain a minimum of 65° in this area.

2. Radwaste Building Exhaust System

Two 100% capacity exhaust filter packages are provided, each consisting of a prefilter, a HEPA filter, and an exhaust fan. The exhaust system draws the air through the transfer tunnel and the drum processing area, located in the auxiliary building. The vent from the decant tank (Byron only) is filtered through the tank vent filter unit located in the auxiliary building before it is released to the plant stack, as discussed in Subsection 9.4.7.2.

A charcoal filter HVAC unit, comprised of a prefilter, HEPA filter, 4-inch charcoal adsorbers, downstream HEPA filter, and two 100% capacity fans, is provided for the potentially contaminated cubicles of the volume reduction system (VRS). Air from the VRS cubicles can be directed through the charcoal filter unit and discharged to the drum transfer tunnel. When the charcoal filter unit is not required, exhaust air can be discharged directly to the tunnel, bypassing the filter unit.

The charcoal adsorbers are provided with a two-stage temperature switch, which senses air temperature leaving the charcoal adsorber. When the air temperature exceeds the first stage setpoint, it is annunciated in the main control room and indicated on the local control panel. If the second stage setpoint is exceeded, it is annunciated on the local control panel.

A manual water deluge valve is located nearby to permit a local operator to quickly actuate the spray system after visual inspection. Upon manual operation the fan is tripped and the inlet and outlet dampers are closed.

The waste storage tanks exhaust fan and fluid bed dryer air blower are interlocked with the charcoal filter unit.

The charcoal filter HVAC unit is not used, inspected, tested, or maintained since Byron and Braidwood do not use the VRS.

c. Supply air is controlled by a pressure differential controller so that the exhaust fan maintains a nominal 1/8-inch negative pressure. Negative pressure may not be maintained while trucks are entering or exiting the building. Administrative controls require that no processing of radioactive materials take place during that time. Also, air samples must be taken in the truck bay while both doors are open.

d. A hot water heating coil with a booster pump and a modulation valve maintains a minimum of 65°F in the radwaste building. The hot water is supplied from the station heating system described under Subsection 9.2.8.

e. The chilled water to the cooling coils and area coolers is supplied from the service building chilled water system described in Subsection 9.2.7.2.

f. Controls and Instrumentation

Two local control panels (LCP) are provided: one for the supply system located at elevation 433 feet 0 inch for the radwaste/service building complex; and, the second for exhaust filter packages located at elevation 401 feet 0 inch of the auxiliary building.

1. System handswitches and controls are provided on the respective LCPs. Pertinent system flow rates, temperature, and differential pressure are displayed on the LCPs.

2. The radwaste building exhaust filter units at Braidwood are tripped on high radiation signal from the radiation detectors in the control

room outside makeup air intake or in the fan discharge ductwork. At Byron, these filter units are tripped by a high radiation detector located in the exhaust fan discharge ductwork.

3. Failure of a function important to the system operation is annunciated on the respective LCP; e.g., high differential pressure across filter, low flow conditions, etc.

4. Controls are pneumatic.

9.4.3.3.3 Safety Evaluation

The radwaste building ventilation system is non-safety-related.

A failure analysis is presented in Table 9.4-8.

9.4.3.3.4 Inspection and Testing Requirements

a. Since the volume reduction system is not used at Byron and Braidwood, the charcoal filter unit serving this area is not normally used, inspected, tested, or maintained. All other equipment is factory inspected and tested in accordance with the applicable equipment specifications and codes. System ductwork and erection of equipment are inspected during various construction stages. Component demonstration tests are performed on all mechanical components and the system is balanced for the design air and water flows and system operating pressures. Controls, interlocks, and safety devices on each system are checked, adjusted, and tested to ensure the proper sequence of operation.

b. The equipment manufacturer's recommendations and station practices are considered in determining required maintenance.

c. Provisions are made to allow change out of filters while the system is in operation in the exhaust filter train.

9.4.3.4 Auxiliary Building HVAC System

The auxiliary building HVAC system serves the liquid radwaste equipment area located in the auxiliary building and is described in Subsection 9.4.5.1.

9.4.4 Turbine Area Ventilation System

The turbine area ventilation system consists of the following non-safety-related subsystems:

a. main turbine room ventilation system,

b. condensate pumps ventilation system,

c. heater drain pumps ventilation system,

d. turbine lube oil storage room exhaust ventilation system,

e. MSR drain tanks level control and instrumentation ventilation systems,

f. turbine building elevator machinery room ventilation system,

g. toilet exhaust system,

h. future offices HVAC system,

i. makeup demineralizer equipment room ventilation system,

j. turbine building secondary sample room and battery rooms HVAC system, and

k. makeup demineralizer lime softener building ventilation system (Braidwood only).

9.4.5 Engineered Safety Features Ventilation System

The following are engineered safety features ventilation systems which serve various engineered safety feature equipment areas:

a. the auxiliary building HVAC system,

b. the diesel-generator room ventilation system,

c. the miscellaneous electrical equipment room ventilation system, and

d. the switchgear heat removal system.

9.4.5.1 Auxiliary Building HVAC System

The auxiliary building HVAC system serves all plant areas of the auxiliary building including engineered safety features cubicles, and fuel handling building, but excludes the solid radwaste facilities control room, computer rooms, auxiliary electric equipment rooms, control room, miscellaneous offices, and laboratories within auxiliary building, which are served by separate independent HVAC systems. The auxiliary building HVAC system is common for Unit 1 and Unit 2.

The VA system includes four main supply and four main exhaust fans. Under normal plant conditions, two supply and two exhaust fans are in operation. The configuration and operation (fan capacities and supply fan flow control dampers) are designed to maintain the auxiliary and fuel handling buildings at a negative pressure in relationship to the outside. While four fan operation is the normal configuration, two fan (one supply fan and one exhaust fan) operation or abnormal operation (two non-accessible charcoal booster fans in conjunction with a fuel handling building charcoal booster fan) during normal operation is acceptable as long as EQ zone temperatures, building differential pressures and airflow direction is maintained. Administrative controls and alarm response procedures are in place to ensure that EQ zone temperatures, building differential pressures and airflow directions are being met. Two fan or abnormal operation is required on an infrequent basis to support maintenance or testing activities on the VA system.

9.4.5.1.1 Design Bases

a. Safety Design Bases

1. The auxiliary building supply and exhaust systems are designed to operate under all plant operating conditions. In the unlikely event of a combined loss-of-coolant accident (LOCA) with loss of offsite power (LOOP) in one unit, the supply and exhaust fan powered by that unit are tripped and two out of six charcoal booster fans are started. The supply and exhaust fans associated with the second unit continue to operate. After 2 hours into the combined LOCA/LOOP the tripped supply and exhaust fans may be manually restarted at the operator's discretion.

a. the auxiliary building HVAC system,

b. the diesel-generator room ventilation system,

c. the miscellaneous electrical equipment room ventilation system, and

d. the switchgear heat removal system.

9.4.5.1 Auxiliary Building HVAC System

The auxiliary building HVAC system serves all plant areas of the auxiliary building including engineered safety features cubicles, and fuel handling building, but excludes the solid radwaste facilities control room, computer rooms, auxiliary electric equipment rooms, control room, miscellaneous offices, and laboratories within auxiliary building, which are served by separate independent HVAC systems. The auxiliary building HVAC system is common for Unit 1 and Unit 2.

The VA system includes four main supply and four main exhaust fans. Under normal plant conditions, two supply and two exhaust fans are in operation. The configuration and operation (fan capacities and supply fan flow control dampers) are designed to maintain the auxiliary and fuel handling buildings at a negative pressure in relationship to the outside. While four fan operation is the normal configuration, two fan (one supply fan and one exhaust fan) operation or abnormal operation (two non-accessible charcoal booster fans in conjunction with a fuel handling building charcoal booster fan) during normal operation is acceptable as long as EQ zone temperatures, building differential pressures and airflow direction is maintained. Administrative controls and alarm response procedures are in place to ensure that EQ zone temperatures, building differential pressures and airflow directions are being met. Two fan or abnormal operation is required on an infrequent basis to support maintenance or testing activities on the VA system.

9.4.5.1.1 Design Bases

a. Safety Design Bases

1. The auxiliary building supply and exhaust systems are designed to operate under all plant operating conditions. In the unlikely event of a loss-of-coolant accident (LOCA) in one unit, the supply and exhaust fan powered by that unit are tripped and two out of six charcoal booster fans are started. The supply and exhaust fans associated with the second unit continue to operate. After 2 hours into the event the tripped supply and exhaust fans may be manually restarted at the operator's discretion.

2. The auxiliary building HVAC system limits the environmental conditions in the various areas served in conformance with the equipment requirements as listed in Table 3.11-2 - Zones A8 through A13.

3. The system controls radioactivity in the areas served by staging the supply air from the clean areas to the areas of greater potential contamination.

4. The auxiliary building HVAC system minimizes the release of airborne radioactivity by treating the auxiliary building and fuel handling building exhaust air as described in Subsection 6.5.1.

5. Sufficient component redundancy is provided to assure continuous operation.

6. Outside air and cubicle coolers are used to ensure environmental conditions in the engineered safety features areas and cubicles, consistent with equipment requirements.

7. The auxiliary building supply and exhaust air flows are reduced following a design-basis accident, consistent with the requirements to maintain building negative pressure, air flow direction, and limit maximum temperature conditions.

8. All the electrical components are powered from ESF Buses. The power supplies meet IEEE-308 criteria to ensure uninterrupted operation.

9. All the components of the auxiliary building HVAC system are Safety Category I except for the following components:

   a. heating coils which are part of the station heating system (Subsection 9.2.8),

   b. cooling coils which are part of the plant chilled water systems (Subsection 9.2.7),

   c. chilled water area coolers located in the elevator machine room, auxiliary building refrigeration units area,

   d. wall fans located in the auxiliary building refrigeration unit area,

   e. supply air filter,

   f. hot machine shop filter unit,

   g. area coolers located in the spent fuel pit pump room and positive displacement pump rooms, and

   h. VA supply and exhaust fan vibration monitoring system.

   The heating and cooling coils are designed to Seismic Category I requirements.

10. The auxiliary building HVAC system is protected against the effects of missiles and flooding.

11. A radiation detection system monitors the air leaving the plant and various pump cubicles as described in Subsection 11.5.2 and initiates a circuit to limit the release of radioactive and nonradioactive forms of iodine to the outdoor atmosphere in accordance with as low as reasonably achievable (ALARA).

b. Power Generation Design Bases

The power generation design bases are same as the safety design bases.

5. Sufficient component redundancy is provided to assure continuous operation.

6. Outside air and cubicle coolers are used to ensure environmental conditions in the engineered safety features areas and cubicles, consistent with equipment requirements.

7. The auxiliary building supply and exhaust air flows are reduced following a design-basis accident, consistent with the requirements to maintain building negative pressure, air flow direction, and limit maximum temperature conditions.

8. All the electrical components are powered from ESF Buses. The power supplies meet IEEE-308 criteria to ensure uninterrupted operation.

9. All the components of the auxiliary building HVAC system are Safety Category I except for the following components:

   a. heating coils which are part of the station heating system (Subsection 9.2.8),

   b. cooling coils which are part of the plant chilled water systems (Subsection 9.2.7),

   c. chilled water area coolers located in the elevator machine room, auxiliary building refrigeration units area,

   d. wall fans located in the auxiliary building refrigeration unit area,

   e. supply air filter,

   f. mask cleaning room package A/C unit

   g. tool storage room filter unit,

   h. area coolers located in the spent fuel pit pump room and positive displacement pump rooms, and

   i. Unit 2 Collection drain sump room/hot machine shop filters and fans.

   The heating and cooling coils are designed to Seismic Category I requirements.

10. The auxiliary building HVAC system is protected against the effects of missiles and flooding.

11. A radiation detection system monitors the air leaving the plant and various pump cubicles as described in Subsection 11.5.2 and initiates a circuit to limit the release of radioactive and nonradioactive forms of iodine to the outdoor atmosphere in accordance with as low as reasonably achievable (ALARA).

b. Power Generation Design Bases

The power generation design bases are same as the safety design bases.

9.4.5.1.2 System Description

The schematic design of the auxiliary building HVAC system is shown in Drawing M-95.

The auxiliary building HVAC system is comprised of auxiliary building supply air and exhaust air subsystems which work in conjunction with each other.

a. The auxiliary building supply system is comprised of two 50% capacity supply air plenums. Each plenum is comprised of the following components in sequence.

   1. One 50% capacity missile protected outside air intake louver.

   2. One 50% capacity supply air filter bank, consisting of a prefilter and medium efficiency filter bank in series. The prefilters are rated for minimum 45% filtration efficiency and the medium efficiency filters are rated for 80% filtration efficiency in accordance with ASHRAE 52 testing method.

   3. One 50% capacity bank of hot water heating coils is capable of heating the outside air from -10°F to 45°F. Hot water for the heating coil is provided by the station heating system described in Subsection 9.2.8.

   4. One 50% capacity bank of chilled water cooling coils is capable of cooling the outside air from 95°F to 68.3°F when the outdoor wet bulb temperature is 78°F. Chilled water for the cooling coil is provided by the plant chilled water system described in Subsection 9.2.7.

5. Two 50% capacity direct driven vane axial fans. Each fan is powered by one of the four separate ESF electrical buses.

6. The supply air is distributed throughout all elevations of the auxiliary building via supply ductwork. The airflow path within the auxiliary building is from areas with lesser potential for contamination (general areas) to areas with greater potential for contamination (cubicle areas) where the air is mechanically exhausted.

b. The auxiliary building exhaust system is described in detail in Subsection 6.5.1.

c. Chilled water is provided to the auxiliary building cooling coils from two (Byron) or three (Braidwood) 50% capacity centrifugal refrigeration units. Refer to Subsection 9.2.7 for a discussion on these refrigeration units.

d. The cubicle coolers are provided in various equipment cubicles or areas of the auxiliary building to provide supplementary cooling. The cubicle coolers are draw-through type (except for the diesel driven auxiliary feedwater cubicle cooler) and each cubicle cooler is comprised of cooling coils and fans enclosed in a steel-plate housing. The cooling coils in each cubicle cooler is served by the essential service water system described in Subsection 9.2.1. One cubicle cooler is provided for each pump. Each cubicle cooler is powered from the same ESF power supply as its associated pump.

e. The cubicle coolers are provided for the following pump cubicles:

1. essential service water pump cubicles,

2. safety injection pump cubicles,

3. residual heat removal pump cubicles,

4. centrifugal charging pump cubicles,

5. spent fuel pit pump cubicles,

6. positive displacement pump cubicles,

7. containment spray pump cubicles, and

8. diesel-driven auxiliary feedwater pump cubicles.

f. Cubicle cooler items 1 through 7 in part e are interlocked to start with the operation of the corresponding pump. In addition, their operation is controlled by thermostats in the rooms to ensure that the room temperature does not exceed the maximum design temperature.

   Each auxiliary feedwater diesel room cubicle cooler is provided with two vane-axial fans. One fan is directly driven by the diesel and operates when the diesel is in operation.

   The second fan is motor-driven, and is controlled by a thermostat in the room to ensure that the room temperature does not exceed the maximum design temperature.

   All the cubicle coolers described previously except the cubicle coolers for spent fuel pit pump room and positive displacement pump room are safety-related. The cubicle coolers for spent fuel pump room and positive displacement pump room are not required to operate during design-basis accident; these have access to ESF buses and can be operated on loss of offsite electric power.

g. The auxiliary building elevator machine room and auxiliary building refrigeration unit room are provided with area coolers each consisting of a chilled water cooling coil, throw-away filter, and a fan. Chilled water is supplied from the plant chilled water system, as described in Subsection 9.2.7. Ventilation fans are provided to circulate the air in the auxiliary building refrigeration unit room through the auxiliary building HVAC control panel room.

h. Controls and Instrumentation

   1. The auxiliary building HVAC system has equipment controls and process monitors located on local control panels and significant operating functions are monitored in the main control room.

   2. Supply fans are started manually with control switches located on the main control panel and on the local control panel. Abnormal conditions, i.e., high and low differential fan pressure and high and low supply air temperature, are annunciated on the main control panel; ionization detection is annunciated on the local control panel.

3. Exhaust fans are started manually with control switches located on the main control panel and on the local control panel. Abnormal condition, i.e., high exhaust air temperature is annunciated on the main control panel; ionization detection is annunciated on the local control panel.

4. Charcoal filter booster fans are started manually with handswitches located on the main control panel and on the local control panel, and automatically on a safety injection signal. Abnormal conditions at Braidwood, i.e., high and low differential fan pressure, are annunciated on the local control panel. Booster fan airflows are indicated on the local control panel with high and low flow alarms on the main control board.

5. Differential pressure across all filter banks are indicated on the local control panels. High differential pressure across any of the filters in an individual plenum is annunciated on the main control panel. Flows through nonaccessible area exhaust plenum and fuel handling building exhaust plenums are indicated on the local control panel. High and low flows through these filter plenums are annunciated on the main control board.

6. Selection of the accessible area exhaust filter plenums is accomplished with handswitches located on the local control panels. Selection of the nonaccessible area exhaust filter plenum and the fuel handling building exhaust filter plenums is done with handswitches located on the main control panels.

7. Cubicle cooler start/stop controls are discussed in Subsection 9.4.5.1.2, item f.

8. At Byron, VA system supply and exhaust fans and motors are equipped with monitors for speed and vibration to detect abnormal operating conditions. The vibration/speed information is displayed on local panel 0VA40J. Panel 0VA40J is equipped with test connections for use with vibration analysis equipment. An abnormal condition from the vibration monitors is annunciated on main control board 0PM02J panel.

i. Auxiliary building HVAC system operation during abnormal plant conditions:

1. During the unlikely event of having a LOCA coincident with a loss of offsite power (LOOP) in one unit, the supply and exhaust fans powered from that unit are tripped and charcoal booster fans are started. The supply fan and exhaust fan associated with the second unit continue to operate. Two hours after the above events, the supply and exhaust fans associated with the LOCA/LOOP unit may be manually restarted. All dampers in the supply air duct are designed to fail open to allow for the introduction of supply air to the auxiliary building during abnormal plant operating conditions.

2. All exhaust air is filtered through the prefilters and HEPA filters. All air exhausted from the nonaccessible areas can be routed through the charcoal adsorbers and downstream HEPA filters before release to the auxiliary building vent stack by manually starting the associated charcoal booster fans. All exhaust air from the fuel handling building can be routed through charcoal adsorbers and downstream HEPA filters before release to the auxiliary building vent stack by manually or automatically (by radiation monitors) starting the charcoal booster fans.

3. The hot water heating coils and the chilled water cooling coils are not operable during abnormal plant operation.

4. During the initial 2 hours of abnormal plant operation, the building will be maintained at a negative pressure. (Refer to item a.1 of Subsection 9.4.5.1.1.)

5. Cubicle coolers provided for the ESF pumps (essential service water, safety injection, containment spray, residual heat removal, centrifugal charging) are designed to function during abnormal conditions to maintain a room temperature not exceeding the maximum design temperature. One cooler is provided for each pump and is fed from the same ESF power supply.

6. Controls and instrumentation - Refer to Subsection 9.4.5.1.2 item h and Sections 6.5 and 7.3 for controls and instrumentation.

i. Auxiliary building HVAC system operation during abnormal plant conditions:

1. During the unlikely event of having a LOCA or a loss of offsite power (LOOP) in one unit, the supply and exhaust fans powered from that unit are tripped and charcoal booster fans are started. The supply fan and exhaust fan associated with the second unit continue to operate. Two hours after the above events, the supply and exhaust fans associated with the unit may be manually restarted. All dampers in the supply air duct are designed to fail open to allow for the introduction of supply air to the auxiliary building during abnormal plant operating conditions.

2. All exhaust air is filtered through the prefilters and HEPA filters. All air exhausted from the nonaccessible areas can be routed through the charcoal adsorbers and downstream HEPA filters before release to the auxiliary building vent stack by manually starting the associated charcoal booster fans. All exhaust air from the fuel handling building can be routed through charcoal adsorbers and downstream HEPA filters before release to the auxiliary building vent stack by manually or automatically (by radiation monitors) starting the charcoal booster fans.

3. The hot water heating coils and the chilled water cooling coils are not operable during abnormal plant operation.

4. During the initial 2 hours of abnormal plant operation, the building will be maintained at a negative pressure. (Refer to item a.1 of Subsection 9.4.5.1.1.)

5. Cubicle coolers provided for the ESF pumps (essential service water, safety injection, containment spray, residual heat removal, centrifugal charging) are designed to function during abnormal conditions to maintain a room temperature not exceeding the maximum design temperature. One cooler is provided for each pump and is fed from the same ESF power supply.

6. Controls and instrumentation - Refer to Subsection 9.4.5.1.2 item h and Sections 6.5 and 7.3 for controls and instrumentation.

9.4.5.1.3 Safety Evaluation

a. The auxiliary building HVAC system is Safety Category I, except those components discussed in Item a.9 of Subsection 9.4.5.1.1, which are designed to Seismic Category I requirements.

b. Refer to Section 7.3 for further classification of control and instrumentation components.

c. The system incorporates features to ensure its reliable operation over the full range of normal and abnormal plant operations. These features include the installation of redundant principal system components. The failure analysis is presented in Table 9.4-10.

d. Refer to Section 3.2 for further classification of structures, systems, and components.

9.4.5.1.4 Testing and Inspection

a. All equipment is factory inspected and tested in accordance with the applicable equipment specifications, quality assurance requirements, and codes. System ductwork and erection of equipment are inspected during various construction stages.

   Construction tests are performed on all mechanical components, and the system is balanced for the design airflows and system operating pressures. Controls, interlocks, and safety devices on each system are checked, adjusted, and tested to ensure the proper sequence of operation. A final integrated preoperational test is conducted with all equipment and controls operational to verify the system performance.

b. The equipment manufacturer's recommendations and station practices are considered in determining required maintenance.

c. Operation of standby equipment is rotated to provide on-line checking and testing of the performance.

d. The auxiliary building and fuel handling exhaust trains are subjected to the factory preoperational and subsequent periodic tests described in Section 6.5.

9.4.5.2 Diesel-Generator Facilities Ventilation System

The diesel-generator facilities ventilation systems consist of the following independent subsystems for each Unit:

a. diesel-generator room and day tank room ventilation system, and

b. diesel oil storage room ventilation system.

9.4.5.2.1 Diesel-Generator Room and Day Tank Room Ventilation Systems

Each of the four diesel-generator rooms and day tank rooms is provided with an independent ventilation system which provides: (1) continuous ventilation for the day tank room during normal plant operation, (2) ventilation for the diesel generator when it operates, and (3) a source of combustion air for the diesel-generator.

9.4.5.2.1.1 Design Bases

a. Safety Design Bases

1. The diesel-generator and day tank room ventilation systems are designed to operate under all normal and abnormal plant operating conditions, except for the following conditions: 1) in the event of fire protection system actuation, the ventilation system is shutdown and 2) in the event of a high energy line break in the turbine building which causes the fire dampers in these rooms to close.

2. The diesel-generator room and day tank room ventilation systems are designed to Safety Category I requirements.

3. Each diesel-generator room and day tank room ventilation system component is powered from the ESF bus corresponding to the diesel-generator it serves.

4. All equipment, ducts, and accessories for the diesel-generator room and day tank room ventilation systems are housed in a missile protected structure.

5. Each diesel-generator room ventilation system is designed to induce outside air to maintain the diesel-generator room temperature conditions indicated in Table 3.11-2.

6. Primary combustion air is drawn by the diesel engine turbocharger from the outside air intake into a plenum and directly to the diesel air intake filter without being mixed with room air.

b. Power Generation Design Bases

1. Each diesel-generator room ventilation system is normally inoperative during normal plant operating conditions, except during testing of the diesel-generators.

2. Each day tank room ventilation system draws a nominal quantity of ventilation air through the corresponding room during normal plant operating conditions to prevent possible accumulation of oil fumes within the diesel oil storage room.

9.4.5.2.1.2 System Description

a. The schematic diagram of the diesel-generator room and tank room ventilation systems for Units 1 and 2 is shown in Drawings M-97 and M-98.

b. Each diesel-generator room and day tank room ventilation system consists of 100% capacity outside air intake louvers, vane axial supply fan, associated intake and recirculation dampers, and day tank room exhaust fan.

c. Provision is made to modulate the outside air intake and return air dampers to maintain a minimum diesel-generator room temperature of 65°F. Exhaust air is relieved to the turbine building.

d. During normal plant operating conditions a nominal quantity of ventilation air is induced through the relief openings by the day tank room exhaust fan. The nominal quantity of ventilation air drawn through the diesel-generator room and day tank room is exhausted to the turbine building.

e. Fire dampers are provided in the diesel-generator room and day tank room walls. The fire dampers are closed upon activation of the associated fire protection system, isolating the diesel-generator room and day tank room.

f. Controls and Instrumentation

1. Each diesel-generator room ventilation system is interlocked to start when its associated diesel-generator starts. In addition handswitches are provided in the main control room for manual starting and stopping of the diesel-generator room ventilation system.

2. Handswitches for manually controlling each day tank room ventilation system are provided on a local control panel associated with the diesel-generator room.

3. Temperature controllers located in each diesel-generator room modulate the outside air intake and return air motor-operated dampers to maintain a minimum diesel-generator room temperature of 65°F.

4. Diesel-generator room temperatures above 130°F and below 60°F are annunciated in the main control room (Byron only).

   Diesel-generator room temperatures above 130°F and supply air temperature below 40°F are annunciated in the main control room (Braidwood only).

5. Controls are electric or electronic.

6. Refer to Section 7.3 for further control and instrumentation details.

9.4.5.2.1.3 Safety Evaluation

a. Each diesel-generator room and day tank room ventilation system is designed to Safety Category I requirements.

b. Loss of a diesel-generator room ventilation system does not affect the safe shutdown capability of the unit, as an independent ventilation system is provided for each diesel-generator room.

c. A system failure analysis is presented in Table 9.4-12.

d. Refer to Section 3.2 for further classification of structures, systems, and components.

e. Loss of diesel-generator room ventilation in the event of a high energy line break in the turbine building will not affect the safe shutdown capability of the unit for the short duration of the transient. These rooms are exposed to elevated temperatures until operator action is taken to restore room ventilation.

9.4.5.2.1.4 Inspection and Testing

a. All equipment is factory inspected and tested in accordance with the applicable equipment specifications, quality assurance requirements, and codes. System ductwork and erection of equipment are inspected during various construction stages for quality assurance. Preoperational tests are performed on all mechanical components and the system

is balanced for the design air flow and system operating temperatures and pressures. Controls, interlocks, and safety devices on each system are checked, adjusted, and tested to ensure the proper sequence of operation.

b. The equipment manufacturer's recommendations and station practices are considered in determining required maintenance.

c. System and equipment operation is monitored during periodic testing of the diesel-generator units.

9.4.5.2.2 Diesel Oil Storage Room Ventilation System

Each of the four diesel oil storage rooms is provided with an independent ventilation system which provides continuous ventilation of each diesel oil storage room. A heat smoke ventilator is provided for each diesel oil storage room for removal of products of combustion.

9.4.5.2.2.1 Design Bases

a. Safety Design Bases

1. Each diesel oil storage room ventilation system is designed to operate under all normal and abnormal plant operating conditions, except in the event of a high energy line break in the turbine building which causes the fire dampers in these rooms to close.

2. The diesel oil storage room ventilation system is designed to Safety Category I requirements, except the heat and smoke ventilation system which is non-safety-related.

3. Each diesel oil storage room exhaust fan is powered from the ESF bus corresponding to the associated diesel-generator.

4. All equipment, ducts, and accessories for the diesel oil storage room are housed in a missile protected structure.

b. Power Generation Design Bases

Each diesel oil storage room ventilation system draws a nominal quantity of ventilation air through the corresponding room to prevent a possible accumulation of oil fumes.

9.4.5.2.2.2 System Description

a. The schematic diagram of the diesel oil storage room ventilation system for Units 1 and 2 is shown in Drawings M-97 and M-98.

b. Each diesel oil storage room ventilation systems consists of two 100% capacity exhaust fans (one standby) which induces a nominal quantity of ventilation air from the turbine building. The ventilation air is drawn through the diesel oil storage room and exhausted to the turbine building preventing a possible accumulation of oil fumes within the diesel oil storage room.

c. Each diesel oil storage room is provided with a heat and smoke ventilator which operates during and

after a postulated fire. The heat and smoke ventilator operates on the induction principle. Compressed air at 80 psig is supplied to the ventilator. The expansion of the compressed air causes an induction of air from the diesel oil storage room and is exhausted to the atmosphere.

d. Fire dampers are provided in the diesel oil storage room walls except for the heat and smoke ventilation opening. The fire dampers are closed upon activation of the associated fire protection system isolating the diesel oil storage room from the turbine building.

e. Controls and Instrumentation

1. Handswitches for manual starting and stopping the diesel oil storage room exhaust fans are provided on a local control panel.

2. Diesel oil storage room temperatures above 122°F are annunciated on the main control panel.

3. Controls are electric or electronic.

4. Refer to Section 7.3 for further control and instrumentation details.

9.4.5.2.2.3 Safety Evaluation

a. The diesel-oil storage room ventilation system is Safety Category I, except that the heat and smoke ventilation system is non-safety-related only.

b. Loss of any diesel oil storage room ventilation system does not affect the safe shutdown capability of the station as an independent ventilation system is provided for each diesel oil storage room. Also, a redundant fan is provided for each diesel oil storage room exhaust to ensure continuous operation.

c. A system failure analysis is presented in Table 9.4-12.

d. Refer to Section 3.2 for further classification of structures, systems, and components.

e. Loss of diesel-oil storage room ventilation in the event of a high energy line break in the turbine building will not affect the safe shutdown capability of the unit for the short duration of the transient. These rooms are exposed to elevated temperatures until operator action is taken to restore room ventilation.

9.4.5.2.2.4 Inspection and Testing

a. All equipment is factory inspected and tested in accordance with the applicable equipment specifications, quality assurance requirements, and codes. System ductwork and erection of equipment are

inspected during various construction stages for Quality Assurance. Preoperational tests are performed on all mechanical components and the system is balanced for the design air flow and system operating temperatures and pressures. Controls, interlocks, and safety devices on each system are checked, adjusted, and tested to ensure the proper sequence of operation.

b. The equipment manufacturer's recommendations and station practices are considered in determining required maintenance.

c. System and equipment operation is monitored during periodic testing of the diesel-generator units.

9.4.5.3 Miscellaneous Electric Equipment Room Ventilation System

The ESF portion of the miscellaneous electric equipment room ventilation system serves the miscellaneous electric equipment and battery rooms for Units 1 and 2. Each Unit 1 and 2 room is provided with an independent ventilation system. Supplemental, non-ESF cooling is provided to the inverters (Byron only) and rod drive cabinets.

9.4.5.3.1 Design Bases

9.4.5.3.1.1 Safety Design Bases

a. The ESF portion of the miscellaneous electric equipment room ventilation system is designed to remove equipment heat to limit the room temperature in accordance with equipment requirements for Units 1 and 2 under normal and abnormal station operating conditions, except in the event of a high energy line break in the turbine building which causes the fire dampers to close.

b. Each ESF portion of the system is powered from the ESF bus serving its associated miscellaneous electric equipment room. The supplemental, non-ESF portion of the system is powered from a non-ESF bus in the turbine building.

c. The ESF portion of the system is designed to Safety Category I requirements. The supplemental, non-ESF portion of the system is designed to Safety Category II requirements, except for the ductwork from each cooler to the equipment served, which is nonseismic.

d. All equipment, ducts, and accessories for the miscellaneous electric equipment room ventilation systems are housed in a missile protected structure.

e. An exhaust fan is provided for each battery room to maintain ventilation of the battery area to limit the hydrogen concentration to 2%. Administrative controls are implemented when ventilation is unavailable to limit hydrogen concentration to 2%. An exhaust fan is provided for Division 11, 12, 21, and 22 miscellaneous electrical equipment rooms to maintain the rooms at atmospheric pressure when the supply fans are in full outside air mode. Each exhaust fan is Safety Category I and is powered from the ESF electrical bus associated with the battery room it serves.

9.4.5.3.1.2 Power Generation Design Bases

The ventilation system for the miscellaneous electrical equipment and battery rooms provide the same functions for both normal and abnormal conditions, consequently, the power generation design bases are identical to the safety design bases, shown in Subsection 9.4.5.3.1.1.

9.4.5.3.2 System Description

The schematic diagram of the miscellaneous electric equipment room ventilation system for Units 1 and 2 is shown in Drawings M-115, M-116, and M-119 (Byron).

a. A supply fan induces air through the outside air intake louvers and a high efficiency filter and distributes it to the associated miscellaneous electric equipment and battery rooms (Division 12 and 22). The Division 11 and 21 miscellaneous electric equipment and battery rooms are supplied by the Division 11 and 21 ESF switchgear ventilation systems respectively. For further details refer to Subsection 7.3.2.2.11.

b. Division 11 and 21: Provision is made to modulate outside air and return air dampers to maintain an approximate maximum and minimum temperature of 108°F and 65°F, respectively.

c. Divisions 12 and 22: The supply fan operates in a 100% return air (RA) mode until the room temperature reaches the setpoint for outside air (OA) mode of operation. At this point, the exhaust fan starts and the outside air (OA) and RA dampers modulate so that the supply fan operates in a 100% outside air mode to limit the maximum room temperature to 108°F. Both fans continue to operate in this mode until the room temperature reaches the setpoint for return air (RA) mode of operation at which point the exhaust fan stops and the supply fan switches to 100% return air mode.

d. The exhaust air is relieved to the turbine building.

e. Fire dampers are provided in duct penetrations and/or ventilation openings in fire walls.

f. The battery area exhaust fan induces air from the associated miscellaneous electric equipment and battery room and discharges to the turbine building.

g. In each miscellaneous electric equipment room (divisions 11, 12, 21, and 22), supplemental, non-ESF cooling is provided to the inverters by a stand-alone air conditioner located within the room (Byron only). In addition, supplemental non-ESF cooling is provided to the rod drive cabinets in the division 12 and division 22 miscellaneous electric equipment rooms by stand-alone spot coolers located within each of those rooms.

h. Controls and Instrumentation.

1. Each ESF portion of the miscellaneous electric equipment room ventilation system has a local control panel. Important operating functions are monitored in the main control room.

2. An abnormal condition, i.e., high room temperature, is annunciated on the main control panel.

3. Ionization detection and low room temperature are annunciated on the local control panel.

4. Handswitches for manual starting of the miscellaneous electric equipment room exhaust and the other exhaust fans are provided only on the local control panels. The handswitches for the miscellaneous electric equipment room supply fans 1VE01C and 2VE01C are located on the MCP as well as on the LCP.

5. Controls are electric or electronic.

6. Refer to Section 7.3 for further control and instrumentation details.

9.4.5.3.3 Safety Evaluation

a. The ESF portion of the miscellaneous electric equipment room ventilation system including battery area exhaust is Safety Category I.

b. The loss of a miscellaneous electric equipment room ventilation system does not affect the safe shutdown capability of the station since independent ventilation systems are provided for each division of miscellaneous electric equipment and battery room.

c. Refer to Section 3.2 for further classification of structure, systems, and components.

d. A system failure analysis is presented in Table 9.4-14.

e. Loss of miscellaneous electrical equipment room ventilation in the event of a high energy line break in the turbine building will not affect the safe shutdown capability of the unit for the short duration of the transient. These rooms are exposed to elevated temperatures until operator action is taken to restore room ventilation.

9.4.5.3.4 Inspection and Testing

a. All ESF equipment is factory inspected and tested in accordance with the applicable equipment specifications, quality assurance requirements, and codes. System ductwork and erection of equipment are inspected during various construction stages for quality assurance. Preoperational tests are performed on all mechanical components and the system is balanced for the design air flow and system operating temperatures and pressure.

Controls, interlocks and safety devices on each system are checked, adjusted, and tested to ensure the proper sequence of operation.

b. The ESF equipment manufacturer's recommendations and station practices are considered in determining required maintenance.

c. ESF equipment and systems operation are demonstrated during normal plant operation since this system operates continuously.

9.4.5.4 ESF Switchgear Ventilation System

The switchgear ventilation system serves the ESF switchgear rooms. Independent switchgear ventilation systems are provided for each of Units 1 and 2 ESF switchgear Divisions, 11, 12, 21, and 22.

9.4.5.4.1 Design Bases

9.4.5.4.1.1 Safety Design Bases

a. The ESF switchgear ventilation systems are designed to remove equipment heat to maintain the switchgear room temperatures in accordance with equipment requirements as enumerated in Table 3.11-2.

b. The ESF switchgear ventilation systems are designed to operate under all normal and abnormal plant operating conditions, except in the event of a high energy line break in the turbine building which causes the fire dampers in the ESF switchgear rooms to close.

c. The ESF switchgear ventilation systems are designed to Safety Category I requirements.

d. Each ESF switchgear ventilation system is powered from the ESF bus corresponding to the ESF switchgear room it serves.

e. The outside air intake ducts and exhaust openings are missile protected. All equipment, ducts, and accessories for each ESF switchgear ventilation systems are housed on a missile protected structure.

f. Each ESF switchgear ventilation system provides cooling by outside air.

9.4.5.4.1.2 Power Generation Design Bases

The same as described in Subsection 9.4.5.4.1.1.

9.4.5.4.2 System Description

a. The ESF switchgear ventilation system is comprised of the following subsystems.

   1. Division 11 ESF switchgear ventilation system,

   2. Division 21 ESF switchgear ventilation system,

   3. Division 12 ESF switchgear ventilation system,

   4. Division 22 ESF switchgear ventilation system,

   5. Division 12 power cable spreading room ventilation system,

   6. Division 22 power cable spreading room ventilation system,

   7. Division 12 cooling tower electric substation ventilation system (Byron only),

   8. Division 22 cooling tower electric substation ventilation system (Byron only),

   9. Division 11 cooling tower electric substation ventilation system (Byron only), and

   10. Division 21 cooling tower electric substation ventilation system (Byron only).

b. All ten ESF switchgear ventilation systems as described previously are independent of each other. The various areas served by individual systems, and their schematic diagram is shown in Drawings M-115, M-116, and M-119 (Byron).

c. Each of the ten ESF switchgear ventilation systems are provided with the following:

   1. A supply fan induces air through the outside air intake and high efficiency filter and distributes it to the areas served by it.

   2. Provision is made to modulate the outside air and return air dampers to limit the temperatures to a maximum of 108°F and a minimum of 65°F.

   3. The exhaust air is relieved to the turbine building except in cases of Division 12 and 22 cooling tower electric substation ventilation

systems where the exhaust air is relieved to the atmosphere.

4. Fire dampers are provided in duct penetrations and/or ventilation openings in fire walls.

5. Controls and Instrumentation

   a) Each ESF switchgear ventilation system has a local control panel and important operating functions are monitored in the main control room.

   b) High room temperature, is annunciated on the main control panel.

   c) Ionization detection is annunciated on the local control panel.

   d) Control switches for manual starting of each of the switchgear ventilation fans are provided on the local control panel and on the main control panel.

   e) Controls are electric or electronic.

   f) Refer to Section 7.3 for further control and instrumentation details.

9.4.5.4.3 Safety Evaluation

a. The ESF switchgear ventilation systems are Safety Category I.

b. The loss of any single switchgear heat removal system does not affect the safe shutdown capability of the station since independent switchgear ventilation systems are provided for each redundant division of switchgear.

c. Refer to Section 3.2 for further classification of structure, systems, and components.

d. A system failure analysis is presented in Table 9.4-16.

e. Loss of ESF switchgear ventilation in the event of a high energy line break in the turbine building will not affect the safe shutdown capability of the unit for the short duration of the transient. The ESF switchgear rooms are exposed to elevated temperatures until operator action is taken to restore room ventilation.

9.4.5.4.4 Inspection and Testing

a. All equipment is factory inspected and tested in accordance with the applicable equipment specifications, quality assurance requirements, and codes. System ductwork and erection of equipment are inspected during various construction stages for

quality assurance. Preoperational tests are performed on all mechanical components and the system is balanced for the design airflow and system operating temperatures and pressures. Controls, interlocks, and safety devices on each system are checked, adjusted, and tested to ensure the proper sequence of operation.

b. The equipment manufacturer's recommendations and station practices are considered in determining required maintenance.

c. Equipment and systems operation are demonstrated during normal plant operation since this system operates continuously.

9.4.6 Pump House Ventilation Systems

The pump house ventilation systems are comprised of the following two systems:

a. circulating water pump house ventilation system, and

b. river screen house ventilation system.

9.4.6.1 Circulating Water Pump House Ventilation System

The circulating water pump house ventilation system is common for both Units 1 and 2, and operates during normal station conditions.

9.4.6.1.1 Design Basis

This non-safety-related system is designed to maintain temperatures in the circulating water pump house within the limits of equipment parameters.

9.4.6.1.1.1 Safety Design Bases

Since the circulating water pump house is not a safety-related system, it has no safety design bases.

9.4.6.1.1.2 Power Generation Design Bases

a. The circulating water pump house ventilation system is designed to operate on a continuous basis during normal plant operating conditions. In the event of a loss of offsite electric power, the system is shutdown.

b. The system limits the maximum temperature to 104°F, and the minimum to 53°F in conformance with equipment requirements.

c. The diesel driven fire pump room minimum flow exhaust fan operates on a continuous basis during normal plant operating conditions to purge the room of oil fumes. In the event of a loss of offsite electric power, the fan is shutdown.

d. The diesel driven fire pump room exhaust fan operates whenever the fire pump operates to limit the maximum room temperature to 122°F. In the event of a loss of offsite electric power, the fan is shutdown.

9.4.6.1.2 System Description

a. The schematic diagram of the circulating water pump house ventilation systems is shown in Drawing M-99.

b. The circulating water pump house is provided with wall mounted louvers and six 16.7% capacity supply fans, which discharge air to the upper level of the circulation water pump house. Provision is made to modulate outside air and return air dampers to maintain approximate maximum and minimum temperature of 104°F and 78°F, respectively.

c. Unit heaters limit the minimum temperature to approximately 53°F.

d. The diesel driven fire pump room minimum flow exhaust fan induces air from the circulating water pump house general area and discharges it to the atmosphere.

e. The diesel driven fire pump room exhaust fan induces air from both the outside and the circulating water pump house general area to limit the maximum temperature to approximately 122°F when the pump is running.

f. Controls and Instrumentation

1. Control switches for each supply fan are located on the turbine building HVAC local control panel and on a local control panel. Exhaust fans are controlled from locally mounted switches.

2. Temperatures above 104°F and below 40°F are annunciated on the local control panel with a local panel trouble alarm in the main control room.

3. Controls are pneumatic.

9.4.6.1.3 Safety Evaluation

The circulating water pump house ventilation system is not safety-related. See Table 9.4-18 for system failure analysis.

9.4.6.1.4 Inspection and Testing

a. All equipment is factory inspected and tested in accordance with the applicable equipment specifications and codes. System ductwork and erection of equipment are inspected during various construction states. Component demonstration tests are performed on all mechanical components and the system is balanced for the design air flow and system operating temperatures and pressures. Controls, interlocks, and safety devices on each system are checked, adjusted, and tested to ensure the proper sequence of operation.

b. The equipment manufacturer's recommendations and station practices are considered in determining required maintenance.

9.4.6.2 River Screen House Ventilation System

The river screen house ventilation system is common for both Units 1 and 2, and operates during normal station conditions.

9.4.6.2.1 Design Bases

This non-safety-related system is designed to maintain temperatures in the river screen house within the limits of equipment requirements.

9.4.6.2.1.1 Safety Design Bases

Since the river screen house ventilation system is not a safety-related system, it has no safety design bases.

9.4.6.2.1.2 Power Generation Design Bases

a. The river screen house ventilation system is designed to operate on a continuous basis during normal plant operating conditions. In the event of a loss of offsite electric power, the system is shut down.

b. The system maintains a maximum temperature of 104°F and a minimum temperature of 65°F in conformance with equipment temperature requirements.

c. The diesel oil storage rooms' exhaust fans operate on a continuous basis during normal plant operating conditions to purge the rooms of oil fumes. In the event of a loss of offsite electric power or fire protection system actuation, the system is shut down.

d. The battery room exhaust fan operates on a continuous basis during normal plant operating conditions to maintain an approximate annual average room temperature of 77°F and to purge the room. In the event of a loss of offsite electric power, the system is shut down.

9.4.6.2.2 System Description

a. The schematic diagram of the river screen house ventilation system is shown in Drawing M-99.

b. The river screen house is provided with wall-mounted louvers and roof-mounted gravity ventilators which open and close automatically to maintain an approximate maximum and minimum temperature of 104°F and 65°F, respectively with supply fans normally not operating. On loss of electric power to the river screen house, the resulting maximum screen house temperature is 115°F.

c. Additional natural ventilation may be provided when the outside air temperature is above 60°F by opening the river screen house rollup door.

d. To supplement the natural ventilation system, two 100% capacity supply air fans are provided to induce air through one of the wall-mounted louvers and discharge air to the upper level of the river screen house. When either of these fans is operating air is relieved to the atmosphere through the remaining wall-mounted louvers and the roof-mounted gravity ventilators. However, the fans are normally not operated due to excessive noise levels.

e. Unit heaters limit the minimum temperature to approximately 65°F.

f. The diesel oil storage rooms' exhaust fans induce air from the river screen house general area and discharge it to the atmosphere.

g. The battery room exhaust fan induces air from the outside air intake louvers and discharges it to the atmosphere. Provision is made to modulate outside air and return air dampers to maintain an approximate annual average room temperature of 77°F.

h. Operating outside air louvers located in the side wall of the river screen house and roof-mounted gravity ventilators will open in the event of a loss of power for gravity ventilation of the river screen house. If the temperature within the river screen house falls below 60°F, these devices will close.

i. Controls and Instrumentation

1. Control switches for each supply fan are mounted on a local control panel. Exhaust fans are controlled from locally mounted switches.

2. Temperatures above 104°F and below 50°F are alarmed on the local control panel and in the main control room.

3. Controls are pneumatic.

9.4.6.2.3 Safety Evaluation

The river screen house ventilation system is not safety-related. See Table 9.4-18 for system failure analysis.

The consequences of the loss of power during cold weather has been evaluated. An analysis was performed to determine the minimum temperature conditions which will be reached in the Byron river screen house following a prolonged loss of the building heaters and other building heat loads during extremely cold weather due to loss of power to the river screen house. The results of the analysis show that with the louvers closed and the diesel pumps not operating the river screen house temperature drops from 60°F to 40°F in approximately 20 minutes. Loss of power at the RSH is annunciated in the control room by the telemetry system powered by a backup d-c battery. Byron Station annunciator response procedures direct the operators to evaluate the operability of the diesels based on ambient diesel temperature and Jacket Water heater operability. The diesels may be started from the control room, if desired, to ensure they remain operable.

A second analysis was performed to determine the minimum temperature conditions which will be reached in the Byron river screen house upon loss of the heating system. The analysis is based on outside conditions of -10°F, a 15-mph wind speed, and a 65°F inside temperature. Conservative values for the expected heat load in the building, including only one CW Makeup Pump, were used. The results of the analysis show that the river screen house temperature will not drop below 50°F. For this event, the diesel Jacket Water heaters would be operating and the diesels would start if required.

9.4.6.2.4 Inspection and Testing

a. All equipment is factory inspected and tested in accordance with the applicable equipment specifications and codes. System ductwork and erection of equipment are inspected during various construction states. Component demonstration tests are performed on all mechanical components and the system is balanced for the design air flow and system operating temperatures and pressures. Controls, interlocks, and safety devices on each system are checked, adjusted, and tested to ensure the proper sequence of operation.

b. The equipment manufacturer's recommendations and station practices are considered in determining required maintenance.

9.4.6 Pump House Ventilation Systems

The pump house ventilation systems are comprised of the following two systems:

a. lake screen house ventilation system, and

b. river screen house ventilation system.

9.4.6.1 Lake Screen House Ventilation System

The lake screen house ventilation system is common for both Units 1 and 2 and operates during normal station conditions.

9.4.6.1.1 Design Bases

This non-safety-related system is designed to maintain temperatures in the lake screen house within the limits of equipment parameters.

9.4.6.1.1.1 Safety Design Bases

Since the lake screen house is not a safety-related system, it has no safety design bases.

9.4.6.1.1.2 Power Generation Design Bases

a. The lake screen house ventilation system is designed to operate on a continuous basis during normal plant operating conditions. In the event of a loss of offsite electric power, the system is shutdown.

b. The system limits the maximum temperature to 104°F and the minimum to 65°F in conformance with equipment requirements.

c. The diesel driven fire pump room minimum flow exhaust fan operates on a continuous basis during normal plant operating conditions to purge the room of oil fumes. In the event of a loss of offsite electric power, the fan is shutdown.

d. The diesel driven fire pump room exhaust fan operates whenever the fire pump operates to limit the maximum room temperature to 122°F. In the event of a loss of offsite electric power, the fan is shutdown.

9.4.6.1.2 System Description

a. The schematic diagram of the lake screen house ventilation systems is shown in Drawing M-99.

b. The lake screen house is provided with wall-mounted louvers and six 16.7% capacity supply fans which discharge air to the upper level of the lake screen house. Provision is made to modulate outside air and return air dampers to maintain approximate maximum and minimum temperatures of 104°F and 78°F, respectively.

c. Unit heaters limit the minimum temperature to approximately 65°F.

d. The diesel driven fire pump room minimum flow exhaust fan induces air from the lake screen house general area and discharges it to the atmosphere.

e. The diesel driven fire pump room exhaust fan induces air from both the outside and the lake screen house general area to limit the maximum temperature to approximately 122°F when the pump is running.

f. Controls and Instrumentation

1. Control switches for each supply fan are located on the turbine building HVAC local control panel and on a local control panel. Exhaust fans are controlled from locally mounted switches.

2. Temperatures above 104°F and below 40°F are annunciated on the local control panel with a local panel trouble alarm in the main control room.

3. Controls and pneumatic.

9.4.6.1.3 Safety Evaluation

The lake screen house ventilation system is not safety-related. See Table 9.4-18 for system failure analysis.

9.4.6.1.4 Inspection and Testing

a. All equipment is factory inspected and tested in accordance with the applicable equipment specifications and codes. System ductwork and erection of equipment are inspected during various construction states. Component demonstration tests are performed on all mechanical components and the system is balanced for the design air flow and system operating temperatures and pressures. Controls,

interlocks, and safety devices on each system are checked, adjusted, and tested to ensure the proper sequence of operation.

b. The equipment manufacturer's recommendations and station practices are considered in determining required maintenance.

9.4.6.2 River Screen House Ventilation System

The river screen house ventilation system is common for both Units 1 and 2, and operates during normal station conditions.

9.4.6.2.1 Design Bases

This non-safety-related system is designed to maintain temperatures in the river screen house within the limits of equipment requirements.

9.4.6.2.1.1 Safety Design Bases

Since the river screen house ventilation system is not a safety-related system, it has no safety design bases.

9.4.6.2.1.2 Power Generation Design Bases

a. The river screen house ventilation system is designed to operate on a continuous basis during normal plant operating conditions. In the event of a loss of offsite electric power, the system is shutdown.

b. The system maintains a maximum temperature of 104°F and a minimum temperature of 65°F in conformance with equipment temperature requirements.

c. The battery room exhaust fan operates on a continuous basis during normal plant operating conditions to maintain an approximate annual average room temperature of 77°F and to purge the room. In the event of a loss of offsite electric power, the system is shutdown.

9.4.6.2.2 System Description

a. The schematic diagram of the river screen house ventilation system is shown in Drawing M-99.

b. The river screen house is provided with wall-mounted louvers which open and close automatically on temperature.

c. To supplement the natural ventilation system, two 100% capacity supply air fans are provided to induce air through a wall-mounted louver and discharge air to the upper level of the river screen house. When either of these fans is operating air is relieved to the atmosphere through the remaining wall-mounted louver. However, the fans are normally not operated due to excessive noise levels.

d. Unit heaters limit the minimum temperature to approximately 65°F.

e. The battery room exhaust fan induces air from the screen house general area and discharges it to the atmosphere.

f. Controls and Instrumentation

1. Control switches for each supply fan are mounted on a local control panel. Exhaust fans are controlled from locally mounted switches.

2. Temperatures above 104°F and below 40°F are alarmed on the local control panel and in the main control room.

3. Controls are electric and pneumatic.

9.4.6.2.3 Safety Evaluation

The river screen house ventilation system is not safety-related. See Table 9.4-18 for system failure analysis.

9.4.6.2.4 Inspection and Testing

a. All equipment is factory inspected and tested in accordance with the applicable equipment specifications and codes. System ductwork and erection of equipment are inspected during various construction states. Component demonstration tests are performed on all mechanical components and the system is balanced for the design air flow and system operating temperatures and pressures. Controls, interlocks, and safety devices on each system are checked, adjusted, and tested to ensure the proper sequence of operation.

b. The equipment manufacturer's recommendations and station practices are considered in determining required maintenance.

9.4.7 Off-Gas and Miscellaneous Tank Vent Filter System

9.4.7.1 Off-Gas Filter System

9.4.7.1.1 Design Bases

9.4.7.1.1.1 Safety Design Bases

The off-gas filter system is a non-safety-related system; therefore, it has no safety design bases.

9.4.7.1.1.2 Power Generation Design Bases

a. This system is designed to operate during normal plant operating condition to filter the potential radioactive particulates and iodine from the exhaust gases of the following equipment (in the event of a primary to secondary steam generator tube leakage):

   1. priming and hogging vacuum pumps air separator tanks,

   2. steam jet air ejector, and

   3. gland steam condensers.

b. A water deluge system is provided for the charcoal adsorbers for fire protection purposes.

c. On loss of power, the system is inoperative.

9.4.7.1.2 System Description

The schematic diagram of the off-gas filter system is shown in Drawing M-113-3.

a. The filter system consists of a moisture separator, prefilters, electrical heating coil, HEPA filters, charcoal adsorbers, and a centrifugal fan.

b. The filter system is located on plant elevation 468 feet 2 inches in the turbine building. An 8-inch thick shielding wall is provided around the filter unit to shield the station personnel.

c. The off-gas filter system is a common system to both Units 1 and 2 and is capable of filtering the exhaust gases from either Unit 1 or 2 (Byron only) condenser priming and hogging vacuum pumps, steam jet air ejectors, and gland steam condensers. The off-gas filter system for Braidwood has been modified such that the exhaust gases from these components bypass the filter unit under all operating conditions. During normal operation, the filter unit is bypassed.

The off-gas filter system is designed to operate only if high radiation in the exhaust gases is detected by the radiation monitor. This condition could exist in the event of a primary to secondary leak in the steam generator with a high degree of fuel cladding failure.

d. Instrumentation and Controls

1. Upon high radiation detection, the air-operated valves upstream and downstream of the filter unit will open and the filter unit bypass valve will close to route the exhaust gases through the filter unit. This condition is annunciated in the main control room and indicated on the local control panel. The Braidwood off-gas filter system has been modified such that the filter unit inlet valves are blocked closed and the bypass valves have been replaced with a spool to direct all exhaust gas flow from Units components directly to the stack.

2. The charcoal adsorbers are provided with a two stage temperature switch that senses air temperature leaving the charcoal adsorbers. When the air temperature exceeds the first stage set point, it is annunciated in the main control room and the local panel.

   If the second state setpoint is exceeded, it is annunciated locally. A deluge valve is locally mounted to permit a local operator to deluge after visual inspection. Upon manual operation of the deluge valve, the fan is tripped and the outlet valves are closed.

3. A flow sensor is provided at the fan exhaust to monitor the air flow. Pressure differential indicators with alarms on the local control panel are provided for the prefilters and HEPA filters. Inlet and outlet temperature indicators are locally mounted on the filter unit.

4. Radiation monitors are provided upstream of the filter unit. For further discussion of the radiation monitoring system refer to Section 11.5.

9.4.7.1.3 Safety Evaluation

The off-gas filter system is a non-safety-related system. See Table 9.4-20 for system failure analysis.

9.4.7.1.4 Testing and Inspection

All equipment is factory inspected and tested in accordance with applicable equipment specifications and codes. During various stages of construction, field inspections are made of the equipment. Acceptance tests are performed on all mechanical components. The equipment is periodically checked and tested to ensure design operation and performance. The equipment manufacturers recommendations and station practices are considered in determining required maintenance.

9.4.7.2 Miscellaneous Tank Vent Filter System

9.4.7.2.1 Design Bases

9.4.7.2.1.1 Safety Design Bases

The miscellaneous tank vent filter system is a non-safety-related system; therefore, it has no safety design bases.

9.4.7.2.1.2 Power Generation Design Bases

a. This system is designed to operate during normal plant operating conditions to filter the potential radioactive particulates and iodine from the vent gases of various miscellaneous tanks and equipment. (See System Description for details)

b. A water deluge system is provided for the charcoal adsorbers for fire protection purposes.

c. On loss of power, the system is inoperative.

9.4.7.2.2 System Description

The schematic diagram of the miscellaneous tank vent filter system is shown in Drawing M-113-3.

a. The miscellaneous tank vent filter system is designed to filter the potential radioactive particulates and iodine from vent gases of the following equipment:

1. blowdown and radwaste demineralizer tanks,

2. blowdown prefilters and after filters,

3. recycle evaporator concentrates filters,

4. auxiliary building floor drain filters,

5. auxiliary building equipment drain filters,

6. radwaste after filters,
7. recycle evaporator condensate filter,
8. recycle evaporator feed filters,
9. seal water injection filters,
10. seal water filter,
11. spent fuel pit filters,
12. reactor coolant filters,
13. chemical drain filter,
14. regeneration waste drain filter,
15. spent fuel pit skimmer filter,
16. drum process units,
17. decanting tanks, (Byron only)
18. spent fuel heat exchangers and pumps,
19. radwaste evaporator heating elements,
20. automatic gas analyzer,
21. radwaste evaporator monitor tanks,
22. spent resin storage tank,
23. boric acid tanks,
24. boric acid filters,
25. laundry drain tank,
26. laundry drain filter,
27. blowdown monitor tanks,
28. seal water heat exchangers,
29. letdown heat exchangers,
30. auxiliary building floor drain tanks,
31. auxiliary building equipment drain tanks,
32. rhr heat exchangers,

33. blowdown condensers,

34. auxiliary building equipment drain collection sumps,

35. letdown reheat heat exchangers,

36. letdown chiller heat exchangers,

37. moderating heat exchangers,

38. auxiliary building borated equipment drain tanks,

39. regeneration waste drain tank,

40. chemical drain tank,

41. recycle evaporator monitor tanks,

42. process sampling hood,

43. drumming station decant tank,

44. volume reduction incinerator exhaust, and

45. chemical/regeneration waste drain tank.

46. Independent Spent Fuel Storage Installation (ISFSI) Multi-Purpose Canister (MPC) evacuation equipment (Byron Only)

b. The filter system consists of a moisture separator, prefilter, electric heating coil, HEPA filters, charcoal adsorber, two 100% capacity centrifugal fans and associated backdraft dampers, air-operated butterfly valves, and instrumentation.

c. The filter system is located on elevation 477 feet 0 inch of the auxiliary building. An 8-inch thick shielding wall is provided around the filter unit to provide shielding to station personnel.

d. The filtered gases are exhausted through the Unit 2 auxiliary building vent stack.

The miscellaneous tank vent filter system is common for both Units 1 and 2 and is designed to treat the vent gases of the equipment in the auxiliary building during normal plant operation.

e. Instrumentation and Controls

1. Flow monitoring is provided at the fan exhaust to monitor the air flow. Pressure differential indicators with alarms on local control panel are provided with all the filters.

2. The charcoal adsorbers are provided with a two stage temperature switch which senses air temperature leaving the charcoal adsorber. When the air temperature exceeds the first stage setpoint, it is annunciated in the main control room and the local control panel. If the second stage setpoint is exceeded, it is annunciated locally. A handswitch is locally mounted to permit a local operator to actuate after visual inspection. Upon manual operation the fan is tripped and the inlet and outlet valves are closed.

3. A flow sensor is provided at the fan exhaust to monitor the air flow. Pressure differential indicators with alarms on the local control panel are provided for the prefilters and HEPA filters. Inlet and outlet temperature indicators are locally mounted on the filter unit.

4. Radiation monitors are provided downstream of the filter unit. For further discussion of the radiation monitoring system refer to Section 11.5.

9.4.7.2.3 Safety Evaluation

The miscellaneous tank vent filter system is non-safety-related system. See Table 9.4-22 for system failure analysis.

9.4.7.2.4 Testing and Inspection

All equipment is factory inspected and tested in accordance with applicable specifications and codes. During various stages of construction, field inspections are made of the equipment. Component demonstration tests are performed on all mechanical components.

The equipment is periodically checked and tested to ensure design operation and performance. The equipment manufacturers recommendations and station practices are considered in determining required maintenance.

9.4.8 Containment Ventilation System

The containment ventilation system as shown in Drawings M-103 and M-104 consists of the following subsystems:

a. reactor containment fan cooler subsystem,

b. containment charcoal filter units subsystem,

c. control rod drive mechanism ventilation subsystem, and

d. reactor cavity and out-of-core instrumentation ventilation subsystem.

9.4.8.1 Reactor Containment Fan Cooler (RCFC) Subsystem

9.4.8.1.1 Design Bases

Refer to Subsection 6.2.2.1.

9.4.8.1.2 System Description

Description of system operation and design requirements under post loss-of-coolant accident condition is given in Subsection 6.2.2.2. Description of system operation and design requirements under normal operation is summarized as follows:

a. Similar to the post loss-of-coolant accident operation, only one train (out of two redundant trains provided) is required to meet the normal operating conditions.

b. Deleted

c. Air circulation pattern during normal operation is the same as the post-loss-of-coolant accident phase; however, the rate of air flow is higher in the normal operation phase. A two-speed fan motor provides lower air flow for the post-loss-of—coolant accident phase.

d. As detailed in Subsection 6.2.2.2, each train of the two redundant trains consists of two RCFC units. Each RCFC unit consists of fan/motor assembly, essential service water (ESW) cooling coil assembly, chilled water cooling assembly, check damper, housing, and ductwork. The chilled water coil assembly is used only for normal operation and is non-safety-related. The other components of the RCFC are safety-related.

e. The ESW return is used as cooling water supply to refrigeration units which are used to provide chilled water to the chilled water cooling coils in each RCFC Unit. On initiation of loss-of-coolant accident signal, the ESW return from the ESW cooling coils will bypass the refrigeration units and will return directly to the ultimate heat sink.

   Description of the RCFC refrigeration units operation is given in Subsection 9.2.7, plant chilled water system.

9.4.8.1.3 Safety Evaluation

Refer to Subsection 6.2.2.3.

9.4.8.1.4 Inspection and Testing Requirements

Refer to Subsection 6.2.2.4.

9.4.8.1.5 Instrumentation Requirements

Refer to Subsection 6.2.2.5.

9.4.8.2 Containment Charcoal Filter Units Subsystem

9.4.8.2.1 Design Basis

The purpose of the containment charcoal filter units subsystem is to reduce the concentration of fission product activity in the containment atmosphere, prior to routine personnel access at power or in advance of a scheduled reactor shutdown.

9.4.8.2.1.1 Safety Design Basis

a. The containment charcoal filter units subsystem is not required to function following a loss-of-coolant accident or for safe shutdown of the plant and therefore has no safety design basis.

b. The containment charcoal filter units subsystem components are designed and supported in accordance with Seismic Category I criteria to preclude damage to the safety-related equipment during the design-basis earthquake (DBE).

c. The containment charcoal filter unit was not designed to operate following a loss of coolant accident. The original HEPA filters contained aluminum separators. Post-LOCA operation of the unit with the original HEPA filters may expose the aluminum in the HEPA filters to containment spray and be a potential source of hydrogen generation. The original HEPA filters have been replaced with filters that do not contain aluminum.

9.4.8.2.1.2 Power Generation Design Basis

a. The containment charcoal filter units subsystem operation is intermittent and is not essential to maintain plant operation.

b. During a loss of offsite electric power, the containment charcoal filter units subsystem will not be operable.

9.4.8.2.2 System Description

This system consists of two 50% capacity units located on the operating floor in the space between the containment wall and the secondary shield wall, equally spaced around the containment perimeter. Each containment charcoal filter unit subsystem is designed to deliver 8000 cfm at Byron and 9000 cfm at Braidwood. Each unit consists of the following components:

a. Prefilters of 85% efficiency.

b. High efficiency particulate air (HEPA) filters of 99.97% efficiency based on 0.3 micron and larger in size.

c. Charcoal adsorber, capable of removing not less than 90% of methyl iodine. The adsorber is a 2-inch tray type.

d. Fire protection system.

e. One centrifugal fan.

f. Housing equipped with isolation dampers to isolate the unit when the fan is not operating.

Drawings M-103 and M-104 provide the subsystem configuration.

9.4.8.2.3 Safety Evaluation

a. This subsystem is non-safety-related with equipment components and supports designed to Seismic Category I requirements.

b. Performance capacity of both units operating together is based on the I-131 activity reduction required to reduce the airborne concentration of this isotope to approximately 1×10^{-10} μ/cm^3. This is consistent with the total exposure limitation of 100 mR received during a 2-hour access period and with site boundary doses consistent with Appendix I 10 CFR 50.

c. A system failure analysis is presented in Table 9.4-24.

9.4.8.2.4 Testing and Inspection

All equipment is factory inspected and tested in accordance with the applicable equipment specifications and codes. System ductwork and erection of equipment are inspected in accordance with the design drawings and manufacturers' recommendation. Component demonstration tests are performed during which time the system is balanced for the design flow and system operating pressure. Controls in each component are checked, adjusted, and tested to assure the proper sequence of operation for all modes of operating conditions. A final, integrated, preoperational test is conducted with all components and controls operational to verify that the system performance and operation meet all design requirements. The equipment manufacturer's recommendations and station practices are considered in determining required maintenance.

9.4.8.3 Control Rod Drive Mechanism (CRDM) Ventilation Subsystem

The CRDM cooling system is a forced air cooling system provided for removal of heat from the CRDM magnetic coil windings. The system is designed as an integral portion of the shroud-head package to reduce the time spent preparing for fuel movement.

9.4.8.3.1 Design Bases

The CRDM cooling system is designed in accordance with the following requirements:

a. The cooling system will maintain the temperature of the stationary and movable gripper and lift coils wiring insulation below design temperatures during normal reactor operation.

b. The cooling system shall have the capability of supplying a minimum of 40,000 cfm cooling air flow in the situation where the normal power supply is interrupted and the reactor is maintained at hot standby.

9.4.8.3.2 System Description

The CRDM supply system consisting of four 50% capacity vane-axial fans provides a reliable supply of cooling air to the CRDM magnetic coil housing during normal reactor operation. The system discharges containment air into a plenum area above the CRDM assemblies and down over the faces of the coil housings. The air exits below the coil housing and across the upper surface of the reactor vessel head via return duct to centrifugal fans which exhaust to the containment atmosphere. The four centrifugal fans are 50%-capacity fans mounted on the upper section of the shroud structure, at the 45° 135° 225° and 315° axes. Each of these fans is capable of exhausting 20,000 cfm of air.

9.4.8.3.3 Safety Evaluation

During normal operation, two CRDM cooling fans will be in operation to supply air through the CRDM coil area. The two other fans are standby units which can be started manually by the control room operator.

The CRDM cooling system is not a safety-related system; however, in the situation where the normal power supply is interrupted and the reactor is maintained at hot standby, the CRDM cooling system may be operable from the emergency power supply. This arrangement assures a minimum air flow to prevent economic damage to the CRDM components by limiting the maximum temperature in accordance with the rated life of the equipment.

It is considered highly unlikely that a complete loss of CRDM cooling could occur because of the system design and use of multiple fans. In the unlikely event of a complete loss of CRDM cooling air, assuming confirmed hot reactor operation, 392° would be reached in 2 to 5 minutes. However, if the reactor is tripped, it would take approximately 30 minutes to reach 392° with loss of all cooling. The CRDMs contain Class H insulation and loss in life can only be estimated from NEMA curves of insulation life versus temperature. Continuous overheating will eventually result in shorting of the coils and tripping of the rods. This is not a safety-related problem since the rods will trip and shut down the reactor. The rod position indicators and incore thermocouple leads would also be exposed to the elevated temperature. This is not a safety-related problem since these do not perform a safeguards function. A system failure analysis is provided in Table 9.4-24.

9.4.8.3.4 Inspection and Testing Requirements

Prior to delivery onsite, the cooling system is shop assembled and checked for proper fitup, as well as functional and running operation. The cooling fans are operated to ensure that all design considerations are satisfied.

Once assembled to the reactor vessel head, the cooling system is again inspected for proper fitup. Upon initial startup of the cooling fans, the cooling air flow is monitored and adjusted to the maximum operating capacity. All instrumentation indicating fan operation is checked and verified.

9.4.8.3.5 Instrumentation Requirements

Each fan provides indication of flow through the fan but not the amount of flow. Each operating fan runs at full capacity. Current readout of each fan motor is provided in the control room. The control room operator does have indication of the electrical status of each CRDM cooling fan.

9.4.8.4 Reactor Cavity Ventilation Subsystem

9.4.8.4.1 Design Bases

The purpose of the reactor cavity ventilation subsystem is to provide ventilation in the reactor vessel cavity to remove the thermal and gamma heat losses from the reactor vessel and thereby limit the maximum temperature of the primary shield wall to 150°F. In addition, the subsystem is designed to limit the normal maximum exhaust air temperature from the cavity and annulus areas to 124.7 °F.

9.4.8.4.1.1 Safety Design Bases

a. The reactor cavity ventilation subsystem is not required to operate following a loss-of-coolant accident or for safe shutdown of the plant and therefore has no safety design bases.

b. The reactor cavity ventilation subsystem components are designed and supported in accordance with Seismic Category I criteria to preclude damage to the safety-related equipment during the design-basis earthquake (DBE).

9.4.8.4.1.2 Power Generation Design Bases

a. The reactor cavity ventilation subsystem is required to operate to support reactor operation.

b. During a loss of offsite electric power, the reactor cavity ventilation subsystem will not be operable.

9.4.8.4.2 System Description

The reactor cavity ventilation subsystem consists of two 100%-capacity fans located on the lower floor between the containment wall and the shield wall. Operation of either fan draws relatively cool air (less than 100°F) from the above location and the discharge is ducted to the reactor cavity where it flows into the following paths:

a. through eight excore neutron detector cavity 4 inch diameter drain lines into the eight excore neutron detector cavities to dissipate thermal and gamma heat, then upward through eight 8 inch diameter pipes and into the cable junction boxes, where the airflow escapes through the sleeve space around the eight reactor vessel nozzles, and

b. upward through the annular gap between the biological shield and the reactor vessel, where part of the flow will escape through the reactor vessel flange annulus and the balance of air will flow out through the sleeve space around the eight reactor vessel nozzles.

Each fan is of the vane axial type and is designed to deliver 15,000 cfm.

Drawings M-103 and M-104 provide the subsystem configuration.

9.4.8.4.3 Safety Evaluation

a. This system is not safety-related and is not required to operate after a LOCA.

b. One spare fan is provided to ensure maintenance of design flow in the event of failure in an operating fan, during all normal modes of operation.

c. All components and their supports meet the requirements of Seismic Category I criteria.

9.4.8.4.4 Testing and Inspection

Refer to Subsystem 9.4.8.3.4.

9.4.8.5 Manipulator Crane Ventilation Subsystem

This subsection has been deleted.

9.4.9 Primary Containment Purge System

The primary containment purge system is subdivided into three subsystems, miniflow purge, normal purge, and post-LOCA purge. These subsystems serve the containment during normal plant operating conditions, during planned reactor shutdowns, and during post-LOCA operating conditions. An independent purge system is provided for each containment. However, the normal containment purge system is not normally used at Byron and it is not used at Braidwood.

9.4.9.1 Miniflow Purge System

The miniflow purge system may be used during Modes 1, 2, 3, or 4 to reduce the concentration of noble gases within containment prior to and during personnel access and to equalize internal and external pressures. These functions are accomplished under administrative control as required by Technical Specifications. The miniflow purge system may also be used during shutdown conditions (i.e., Modes 5, 6, or defueled).

9.4.9.1.1 Design Bases

a. Safety Design Bases

1. The miniflow purge system is non-safety related.

2. The ductwork and supports are designed to Seismic Category I requirements to preclude damage to Safety Category I equipment during a safe shutdown earthquake. The fans are nonseismic.

3. Primary containment isolation valves associated with this system are designed to function during normal and abnormal conditions and are classified as Safety Category I. For further details regarding the isolation valves refer to Subsection 6.2.4.

b. Power Generation Design Bases

1. Each miniflow purge system is designed to operate during normal and shutdown reactor conditions to purge the containment in order to keep personnel exposures to ALARA levels.

2. At Braidwood the exhaust air from this system is filtered through a separate miniflow purge exhaust filter unit to remove radioactive particulate prior to release to atmosphere.

3. At Byron the exhaust air from this system is filtered through the normal purge filter system to remove radioactive particulate prior to release to atmosphere.

9.4.9.1.2 System Description

The schematic diagram for this system is shown in Drawings M-105 and M-106.

a. The miniflow purge system consists of independent systems for Unit 1 and Unit 2 containments.

b. A supply fan induces air through outside air louvers, prefilters, medium efficiency filters, and distributes this air to the ductwork inside the containment via the normal purge.

c. Air is exhausted from the containment by the miniflow exhaust fan and is filtered through prefilters and HEPA filters prior to discharging to the atmosphere via the plant vent stack.

d. The containment penetrations are 8 inches maximum and each penetration contains two isolation valves, one inside and one outside the containment. The valves are designed to close in 5 seconds as a result of an ESF actuation signal.

e. Radiation monitors are provided to monitor the exhaust air prior to discharge to the plant vent stack. Refer to Subsections 11.5.2 and 12.3.4 for further discussion on radiation monitoring system.

f. Portions of the miniflow purge line can be used post-LOCA to provide a path from the containment to the post-LOCA purge unit. This portion of the system is Safety Category I. The portion of the system from the outside of the containment wall to the outside isolation valves is designed for the maximum containment pressure.

g. A debris screen is provided at the inlet of the first isolation valve on the supply system to prevent debris from clogging the valve. The screen and pipe from the screen to the valve are Category I and designed to the containment environment.

h. Controls and Instrumentation

1. Each supply and exhaust fan is controlled by a control switch located in the main control room.

2. Each isolation valve is controlled by a control switch located in the main control room. Each isolation valve will close on isolation signal.

3. The system is provided with flow control devices which will ensure design flow will be supplied under all normal operating conditions.

4. Instrumentation is provided for monitoring system operating variables during normal operating conditions. Loss of airflow, low supply air temperature and high differential pressure across filters are annunciated in the main control room.

5. Containment isolation valve position is indicated in the main control room.

6. The controls are pneumatic and electric.

9.4.9.1.3 Safety Evaluation

a. The miniflow purge system is non-safety related.

b. All ductwork within the containment is designed to conform to Seismic Category I requirements.

c. All containment penetration isolation valves are designed to conform to Safety Category I requirements.

d. A failure analysis is presented in Table 9.4-26.

9.4.9.1.4 Inspection and Testing

All equipment is factory inspected and tested in accordance with the applicable equipment specifications and codes. System ductwork and erection of equipment are inspected during various construction stages. Component demonstrations tests are performed on all mechanical components and the system is balanced for the design airflows and system operating pressures. Controls, interlocks, and safety devices on each system are checked, adjusted, and tested to ensure the proper sequence of

operation. The equipment manufacturer's recommendations and station practices are considered in determining required maintenance.

9.4.9.2 Normal Containment Purge System

The normal containment purge system was originally designed to be used during shutdown conditions (i.e., Modes 5, 6, or defueled) to supply outside air into the containment for ventilation and cooling or heating and to reduce the concentration of noble gases within containment prior to and during personnel access. However, the normal containment purge system is not normally used at Byron and it is not used at Braidwood.

9.4.9.2.1 Design Bases

a. Safety Design Bases

1. The normal containment purge system is nonsafety related.

2. Equipment components and supports are designed to Seismic Category I requirements to preclude damage to safety-related equipment during a safe shutdown earthquake. The heating coils are nonseismic.

3. Primary containment isolation valves associated with this system are designed to function during normal and abnormal shutdown conditions and are classified as Safety Category I. For further details on isolation valves refer to Subsection 6.2.4.

b. Power Generation Design Bases

1. The normal containment purge system is designed to assure safe access to the containment by reducing the airborne particulates of the containment atmosphere.

2. The exhaust air from this system is filtered through prefilters and HEPA filters to remove radioactive particulate prior to release to the atmosphere.

9.4.9.2.2 System Description

The schematic diagram for this system is shown in Drawings M-105 and M-106.

a. The normal containment purge system consists of independent systems for Unit 1 and Unit 2 containments.

b. Two 100% capacity, supply fans are provided. 100% outside air is induced through air louvers, prefilters, medium efficiency filters and distributed in the containment via ductwork around the periphery

of the reactor refueling pool. The air is discharged through linear grilles to create a fluid boundary, or air curtain, between access areas surrounding the pool and air with a potential tritium concentration. This purge rate provides approximately one air change per hour and will permit safe access to the containment 3 hours after a planned shutdown.

c. The exhaust air is induced from the containment by the purge exhaust fans. Suction is taken from the containment at the containment wall at elevation 463 feet 0 inch.

d. Two 100% capacity purge exhaust fans are provided. The purge exhaust is filtered through prefilters and HEPA filters prior to release to the atmosphere via the plant vent stack.

e. The normal purge supply and exhaust lines are 48-inches in diameter and are provided with two isolation valves each, one inside and one outside the containment.

f. Radiation monitors are provided to monitor exhaust air prior to discharge to the plant vent stack. Refer to Subsections 11.5.2 and 12.3.4 for further discussion on the radiation monitoring system.

g. The portion of the system between the inside and outside containment isolation valves is designed for the maximum containment pressure.

h. Control and Instrumentation

    1. Each supply and exhaust fan is controlled by a control switch located in the main control room.

    2. Each isolation valve is controlled by a control switch located in the main control room. Each isolation valve will close on isolation signal.

    3. The exhaust system is provided with flow control devices which ensures design flow will be supplied under all normal operating conditions.

    4. Instrumentation is provided for monitoring system operating variables during normal operating conditions. Loss of airflow, low supply air temperatures, and high differential pressure across filters are annunciated in the main control room.

5. Containment isolation valve position is indicated in the main control room.

6. The controls are pneumatic and electric.

9.4.9.2.3 Safety Evaluation

a. The normal containment purge system is non-safety related.

b. All ductwork within the containment is designed to conform to Seismic Category I requirements.

c. All containment penetration isolation valves are designed to conform to Safety Category I requirements.

d. A failure analysis is presented in Table 9.4-26.

9.4.9.2.4 Inspection and Testing

All equipment is factory inspected and tested in accordance with the applicable equipment specifications and codes. System ductwork and erection of equipment are inspected during various construction stages. Component demonstration tests are performed on all mechanical components and the system is balanced for the design airflows and system operating pressures. Controls, interlocks, and safety devices on each system are checked, adjusted, and tested to ensure the proper sequence of operation. The equipment manufacturer's recommendations and station practices are considered in determining required maintenance.

9.4.9.3 Post-LOCA Purge System

The combustible gas control system as defined by the requirements of 10 CFR 50.44 consists of a hydrogen monitoring system and a mixing system. Based on the revision to 10 CFR 50.44 which eliminated the design basis LOCA hydrogen release, the hydrogen recombiners and backup hydrogen vent and purge systems (i.e., post –LOCA purge system) are no longer required. Although the post LOCA purge system is no longer required to meet the requirements of 10 CFR 50.44, the system remains in place and could be utilized following an accident. See Subsection 6.2.5 for a discussion of the combustible gas control system.

9.4.9.3.1 Design Bases

a. Safety Design Bases

1. The post-LOCA purge system is a non-safety-related system (per Branch Technical Position CSB 6-2) which could be used to help reduce the concentration of combustible gas in the containment atmosphere following an accident.

2. The equipment components and supports are designed to Seismic Category I requirements.

3. Primary containment isolation valves associated with this system are designed to function during normal and abnormal conditions and are classified as Safety Category I. For further

details regarding the isolation valves refer to Subsection 6.2.4.

4. The exhaust air from this system is filtered through the post-LOCA purge filter system to remove radioactive particulate prior to release to atmosphere.

5. The system is powered from a non-ESF electrical bus but does have the capability of being transferred to an ESF bus.

b. Power Generation Design Bases

The post-LOCA purge system does not operate during normal plant operating conditions (except for testing purposes).

9.4.9.3.2 System Description

The schematic diagram for this system is shown in Drawings M-105 and M-106.

a. The post-LOCA purge system could be used to purge the containment atmosphere after the activity in the containment has reached a level low enough to allow its exhaust to the atmosphere.

b. The post-LOCA purge system takes its suction from the containment through the miniflow purge exhaust penetration. The purging air is then passed through prefilters, HEPA filters, and charcoal filters before being released to the stack.

c. In the unlikely event of a LOCA, the post-LOCA purge system is designed to operate continuously at 400 cfm if needed following a LOCA and initial containment spray. The post-LOCA purge system is controlled manually.

d. The containment post LOCA purge line is 8 inches maximum and contain two isolation valves, one inside and one outside the containment. The valves are designed to close in 5 seconds.

The outside valve in the inlet pipe to the post-LOCA purge filter unit is normally closed, except when the filter is being tested.

e. Radiation monitors are provided to monitor the exhaust air prior to discharge to the plant vent stack. Refer to Subsections 11.5.2 and 12.3.4 for further discussion on radiation monitoring system.

f. Each charcoal filter is provided with a water deluge system which is manually activated from the local control panel.

g. Controls and Instrumentation

1. Each exhaust fan is controlled by a control switch located in the main control room.

2. Functions important to operation of the system (filter pressure drop, fan differential pressure, air flow quantity, and temperature) are indicated on the local panel. Loss of airflow, high filter differential pressure, high charcoal filter temperature are annunciated in the main control room.

3. The position of each isolation valve associated with this system is indicated on the main control board. Each isolation valve is controlled by a handswitch on the main control board.

4. Isolation valves are provided with fail closed air operators. Those valves required to operate post-LOCA are capable of being reopened when required.

5. The controls are electric.

9.4.9.3.3 Safety Evaluation

a. The post-LOCA purge system is non-safety related.

b. All ductwork within the containment is designed to conform to Seismic Category I requirements.

c. All containment penetration isolation valves are designed to conform to Safety Category I requirements.

d. A water deluge nozzle is provided for fire protection of the charcoal filters.

e. A failure analysis is presented in Table 9.4-26.

9.4.9.3.4 Inspection and Testing

All equipment is factory inspected and tested in accordance with the applicable equipment specifications and codes. System ductwork and erection of equipment are inspected during various construction stages. Component demonstration tests are performed on all mechanical components and the system is balanced for the design airflows and system operating pressures. Controls, interlocks, and safety devices on each system are checked, adjusted, and tested to ensure the proper sequence of operation. The equipment manufacturer's recommendations and station practices are considered in determining required maintenance.

9.4.10 Miscellaneous HVAC System

The miscellaneous HVAC system consists of the following subsystems:

a. main steam pipe tunnel and safety valve enclosure ventilation system,

b. tendon access tunnel ventilation system,

c. control room offices HVAC system, and

d. fuel handling building train shed ventilation system.

9.4.10.1 Control Room Offices HVAC System

The control room offices HVAC system is common for Units 1 and 2.

9.4.10.1.1 Design Bases

9.4.10.1.1.1 Safety Design Bases

The control room offices HVAC system is a non-safety-related system and therefore has no safety design bases.

9.4.10.1.1.2 Power Generation Design Bases

a. The control room offices HVAC system is designed to maintain the rooms at a temperature of 73°F ±2°F and to maintain the room at a relative humidity of 40% RH ±5% RH as indicated in Table 3.11-2.

b. A continuous amount of exhaust is provided to dilute air in the women's locker room.

c. Sufficient redundancy is provided to ensure the continuous power generation objective.

d. The control room offices HVAC system operates on a continuous basis during normal plant operating conditions. In the event of a loss of offsite power or a high radiation signal from the radiation detectors located in the control room outside makeup air intake, the system is shut down.

9.4.10.1.2 System Description

a. The schematic diagram of the control room offices HVAC system is shown in Drawing M-113.

b. Deleted

c. Two 100% capacity supply equipment trains are provided to maintain temperature control in each room. Each train consists of fresh air intake louvers, control dampers, supply air filters, supply fan, hot water heating coils, and chilled water cooling coils. One train normally operates continuously.

d. Two 100% capacity return fans are provided. One fan normally operates continuously.

e. Humidification is provided by an electric steam boiler serving humidifiers in ducts serving each computer room and the control room offices.

f. Hot water for the heating coils is provided by the station heating system described in Subsection 9.2.8. The coil is sized to heat a mixture of outside and return air to a maximum of 80°F.

g. Chilled water for the cooling coils is provided by the plant chilled water system described in Subsection 9.2.7. The coil is sized to cool a mixture of outside and return air to a minimum of 53°F.

h. The system is designed to condition air supplied to the computer rooms located in the auxiliary building and the control room offices located in the turbine building.

i. Fire dampers are provided in any duct penetration in fire rated walls or floors.

j. A toilet exhaust fan is provided in the women's locker room. This fan is designed to dilute air in the room.

k. Controls and Instrumentation

1. The supply fans, return fans, and electric steam boiler are manually operated by control switches mounted on a local control panel. The standby fans are started manually if its companion fan fails.

2. Computer room thermostats modulate dampers in the heating and cooling ducts to maintain temperature setting.

3. Control room offices zone thermostats modulate dampers in the respective mixing boxes to maintain temperature setting.

4. Humidistats modulate humidifier steam valves to maintain humidity settings.

5. Differential pressure is indicated on the local control panel and high differential pressure is alarmed.

6. Ionization detectors are provided in the supply and exhaust ducts to isolate the system in the event of fire.

7. All controls are pneumatic and electric.

9.4.10.1.3 Safety Evaluation

a. The control room offices HVAC system is non-safety-related.

b. A system failure analysis is presented in Table 9.4-28.

9.4.10.1.4 Testing and Inspection

All equipment is factory-inspected and tested in accordance with the applicable equipment specifications. System ductwork and erection of equipment are inspected in accordance with the design drawings and manufacturers' recommendations. Acceptance tests are performed during which time each system is balanced for the design airflow, system operating temperatures, and pressures. Controls on each system are checked, adjusted, and tested to ensure the proper sequence of operation. A final, integrated, acceptance test is conducted with all equipment and controls in operation to verify that system performance and operation meet design requirements.

Each system is periodically checked and tested to ensure design operation and performance. The equipment manufacturers recom-

mendations and station practices are considered in determining required maintenance.

9.4.10.2 Main Steam Pipe Tunnel and Safety Valve Enclosures Ventilation System

9.4.10.2.1 Design Bases

9.4.10.2.1.1 Safety Design Basis

The ventilation system for the main steam pipe tunnel and safety valve enclosures is a non-safety-related system and, therefore, has no safety design basis.

9.4.10.2.1.2 Power Generation Design Bases

a. The main steam pipe tunnel and safety valve enclosures are designed for temperatures ranging from 65°F to 123°F.

b. Continuous ventilation is provided by drawing air from the turbine room to remove heat gained from the pipes, valves, etc., and exhausting through the main steam valve enclosures.

c. The ventilation system for the tunnel operates on a continuous basis during normal plant operating conditions. In the event of a loss of offsite power, the system is shut down.

9.4.10.2.2 System Description

a. The schematic diagram of the main steam pipe tunnel ventilation system is shown in Drawings M-111 and M-112.

b. A failure analysis is presented in Table 9.4-30.

c. As shown in Drawings M-111 and M-112, there are four ventilation exhaust fans; one fan located in each safety valve enclosure. All fans operate continuously.

d. Control and Instrumentation

At Byron, each fan is provided with recirculating dampers that are modulated along with the exhaust damper by a temperature controller located in the safety valve enclosure. The exhaust and recirculating dampers modulate to maintain a minimum temperature of 65°F.

At Braidwood, each fan is provided with an exhaust damper and a recirculating damper located in the safety valve enclosure. Damper open and closed positions are controlled pneumatically by a solenoid valve, which is powered from the fan control circuit.

9.4.10.2.3 Safety Evaluation

The ventilation system for the main steam pipe tunnel is non-safety-related.

9.4.10.2.4 Testing and Inspection

All equipment is factory-inspected and tested in accordance with the applicable equipment specifications. The system ductwork and erection of equipment are inspected in accordance with the design drawings and manufacturers recommendations. Acceptance tests are performed during the time each system is balanced for the design airflow, system operating temperatures, and pressures. Controls on each system are checked, adjusted, and tested to ensure the proper sequence of operation. The equipment manufacturers recommendations and station practices are considered in determining the required maintenance.

TABLE 9.4-1 HAS BEEN DELETED

TABLE 9.4-1 HAS BEEN DELETED

TABLE 9.4-1 HAS BEEN DELETED

TABLE 9.4-1 HAS BEEN DELETED

TABLE 9.4-1 HAS BEEN DELETED

TABLE 9.4-1 HAS BEEN DELETED

TABLE 9.4-2

CONTROL ROOM HVAC SYSTEM FAILURE ANALYSIS

COMPONENT	MALFUNCTION	RESULTS
Supply and Return Fans	Loss of airflow or flowpath (fan motor continues to operate).	An airflow switch sensing high or low differential pressure across the fan actuates an alarm on the main control room control panel. A fan trip occurs when differential pressure across the fan exceeds the airflow switch setpoint (after a short time-delay; supply fan only). A trip of the supply fan for any reason causes a subsequent trip of the return and make-up fans.
	Motor Trip	A fan trip alarm actuates on the main control room control panel when the Local/Remote control switch is in Remote mode. A trip of the supply fan for any reason causes a subsequent trip of the return and make-up fans. A redundant ventilation train is available for operation as required.
Chiller unit and chilled water pump		See Table 9.2-8
Supply Air Filter	High pressure drop across filter.	Differential pressure switch sensing filter pressure drop actuates an alarm on both the local and main control room control panels.
Emergency Make-up Air Filter Unit	Failure resulting in high differential pressure across HEPA filter.	High differential pressure is annunciated on both the local and main control room control panels
	Failure of fan resulting in loss of duct pressure.	Should an operating fan fail, resultant low airflow actuates main control room low pressure annunciator (Byron/Braidwood) and local control panel low flow annunciator (Braidwood only).*
	Failure of heater resulting in high humidity entering adsorber.	High humidity actuates an alarm on the local control panel.* A redundant filter train is available for operation as required.
Humidifiers and Electric Steam Generator	Steam Generator internal safety function activated.	Steam Generator trip occurs. Steam Generator trouble alarm actuates on the local control panel.* A main control room low humidity condition is annunciated on the local control panel.*

TABLE 9.4-2 (Cont'd)

CONTROL ROOM HVAC SYSTEM FAILURE ANALYSIS

COMPONENT	MALFUNCTION	RESULTS
Fire Dampers	Damper fails closed.	An airflow switch sensing high or low differential pressure across the fan may actuate an alarm or cause a fan trip as described previously. Main control room low differential pressure condition will annunciate at both the local and main control room control panel.
Outside air intake isolation damper	Failure of damper to close.	Damper non-closure is indicated on main control board. However, two dampers in series are provided so that failure of a single damper does not compromise system isolation.
Charcoal Filter	High leaving air temperature.	Temperature sensing devices sensing leaving air temperature actuates an alarm on the main control room control panel in the event of primary over-temperature condition. A secondary over-temperature condition actuates an alarm on the local control panel.* Local deluge valves are available for manual operation, as required.
Radiation monitor in make-up air intake	Failure resulting in loss of radiation-monitoring capability, low scale trip.	Redundant radiation monitors are provided.
Ionization Detectors	Ionization Detector fails.	An ionization smoke detector trouble alarm annunciates on both the local and main control room control panels.

* Any alarm on the local control panel results in a subsequent local panel trouble alarm in the main control room.

TABLE 9.4-3 HAS BEEN DELETED

TABLE 9.4-3 HAS BEEN DELETED

TABLE 9.4-3 HAS BEEN DELETED

TABLE 9.4-4

RADWASTE AND REMOTE SHUTDOWN CONTROL ROOM HVAC SYSTEM

FAILURE ANALYSIS

COMPONENT	MALFUNCTION	RESULTS
Supply and Return Fans	Loss of airflow or flowpath (fan motor continues to operate).	An airflow switch sensing high or low differential pressure across the fan actuates an alarm on the local control panel.* A high differential pressure also causes a fan trip. A high room temperature condition is alarmed on the local and main control room control panels when area temperature exceeds the alarm setpoint.
	Motor Trip.	An auto-trip alarm actuates at the local control panel.
Filters	High pressure drop across filter.	Differential pressure switch sensing filter pressure drop actuates an alarm on the local control panel.*
Cooling Coil and Condensing Unit	Condensing Unit internal safety activated.	Condensing Unit trips. Condensing Unit trip actuates a condensing unit control panel trip light and an alarm at the local control panel.*
Humidifiers and Electric Steam Generator	Steam Generator internal safety function activated.	Steam Generator trip occurs. Steam Generator trouble alarm actuates on the local control panel.*
Fire Dampers	Damper fails closed.	An airflow switch sensing high or low differential pressure across the fan may actuate an alarm on the local control panel.* A high differential pressure condition may also cause a fan trip and subsequent alarms as described previously.
Ionization Detectors	Ionization Detector fails.	An ionization smoke detector trouble alarm annunciates on local control panel.*

* Any alarm on the local control panel results in a subsequent local panel trouble alarm in the main control room.

TABLE 9.4-5 HAS BEEN DELETED |

TABLE 9.4-5 HAS BEEN DELETED |

TABLE 9.4-5 HAS BEEN DELETED |

TABLE 9.4-5 HAS BEEN DELETED |

TABLE 9.4-5 HAS BEEN DELETED |

TABLE 9.4-5 HAS BEEN DELETED |

TABLE 9.4-5 HAS BEEN DELETED |

TABLE 9.4-6

LABORATORY HVAC SYSTEM FAILURE ANALYSIS

COMPONENT	MALFUNCTION	RESULTS
Supply, Return, or Exhaust Fans (excluding HRSS exhaust fans)	Loss of airflow or flowpath (fan motor continues to operate).	An airflow switch sensing low differential pressure across the fan actuates an alarm on the local control panel.*
	Motor Trip	An auto-trip alarm actuates at the local control panel.* A trip of the operating exhaust fan for any reason will result in a complete shutdown of the system due to control circuit interlocks. A trip of the supply fan for any reason results in a subsequent trip of the return and laundry room exhaust fans. A trip of the laundry room exhaust fan results in a subsequent trip of the laundry room hood fan.
Supply or Exhaust Filters	High pressure drop across filter.	Differential pressure switch sensing filter pressure drop actuates an alarm on the local control panel.*
Heating Coil	Loss of instrument air signal to 3-way Flow Control Valve.	Station Heat flow control valve fails flow through coil. (i.e. - Heating coil goes to full heat).
	Loss of station heat flow.	Low fan inlet temperature is alarmed on the local control panel when temperatures fall below the alarm setpoint.* Low fan inlet temperature also results in a fan trip with alarms as described previously.
Humidifiers and Electric Steam Generators	Steam generator internal safety function trips.	Steam Generator trip occurs. Steam Generator trouble alarm actuates on the local control panel.*
Control Dampers	Normally open damper fails closed.	An airflow switch sensing high or low differential pressure across the fan may actuate an alarm on the local control panel.* A high differential pressure condition may also cause a fan trip and subsequent alarms as described previously.

TABLE 9.4-6 (Cont'd)

LABORATORY HVAC SYSTEM FAILURE ANALYSIS

COMPONENT	MALFUNCTION	RESULTS
Fire Dampers	Damper fails closed.	An airflow switch sensing high or low differential pressure across the fan may actuate an alarm on the local control panel.* A high differential pressure condition may also cause a fan trip and subsequent alarms as described previously.
Ionization Detectors	Ionization Detector fails.	An ionization smoke detector trouble alarm annunciates on local control panel.

* Any alarm on the local control panel results in a subsequent local panel trouble alarm in the main control room.

TABLE 9.4-7 HAS BEEN DELETED

TABLE 9.4-7 HAS BEEN DELETED

TABLE 9.4-7 HAS BEEN DELETED

TABLE 9.4-7 HAS BEEN DELETED

TABLE 9.4-7 HAS BEEN DELETED

TABLE 9.4-7 HAS BEEN DELETED

TABLE 9.4-7 HAS BEEN DELETED

TABLE 9.4-8

RADWASTE BUILDING VENTILATION SYSTEM FAILURE ANALYSIS

COMPONENT	MALFUNCTION	RESULTS
Supply and Exhaust Fans	Loss of airflow or flowpath (fan motor continues to operate).	An airflow switch sensing low differential pressure across the fan actuates an alarm on the local or remote control panel, as applicable.* An airflow switch sensing high differential pressure across the exhaust fan actuates an alarm on the remote control panel.* A high differential pressure across the exhaust fan causes a trip of the fan. A trip of the operating exhaust fan actuates an interlock that causes the supply fan to trip.
	Motor Trip	A fan trip alarm actuates at the local or remote control panel, as applicable. A trip of an operating exhaust fan actuates an interlock that causes the operating supply fan to trip.
Supply or Exhaust Filters	High pressure drop across filter.	Differential pressure switch sensing filter pressure drop actuates an alarm on the local control panel.*
Heating Coil	Loss of instrument air signal t 3-way Flow Control Valve.	Station Heat flow control valve fails flow through coil. (i.e. - Heating coil goes to full heat).
	Loss of station heat flow.	Low fan inlet temperature is alarmed on the local control panel when temperatures fall below the alarm setpoint.* Low fan inlet temperature also results in a supply fan trip with alarms as described previously.

TABLE 9.4-8 (Cont'd)

RADWASTE BUILDING VENTILATION SYSTEM FAILURE ANALYSIS

COMPONENT	MALFUNCTION	RESULTS
Charcoal Filter	High leaving air temperature.	Temperature sensing devices sensing leaving air temperature actuates an alarm on the main control room control panel in the event of primary over-temperature condition (charcoal filters only). A secondary over-temperature condition actuates an alarm on the local control panel (charcoal filters and electric heating coil). Local deluge valves are available for manual operation, as required.
Control Dampers	Normally open damper fails closed.	An airflow switch sensing high or low differential pressure across the fan may actuate an alarm on the local control panel.* A high differential pressure condition may also cause a fan trip and subsequent alarms as described previously.
Fire Dampers	Damper fails closed.	An airflow switch sensing high or low differential pressure across the fan may actuate an alarm on the local control panel.* A high differential pressure condition may also cause a fan trip and subsequent alarms as described previously.
Ionization Detectors (supply fan only)	Ionization Detector fails.	An ionization smoke detector trouble alarm annunciates on local control panel.*

* Any alarm on the local control panel results in a subsequent local panel trouble alarm in the main control room.

TABLE 9.4-9 HAS BEEN DELETED

TABLE 9.4-9 HAS BEEN DELETED

TABLE 9.4-9 HAS BEEN DELETED

TABLE 9.4-9 HAS BEEN DELETED

TABLE 9.4-9 HAS BEEN DELETED

TABLE 9.4-9 HAS BEEN DELETED

TABLE 9.4-9 HAS BEEN DELETED

TABLE 9.4-9 HAS BEEN DELETED

TABLE 9.4-9 HAS BEEN DELETED

TABLE 9.4-9 HAS BEEN DELETED

TABLE 9.4-9 HAS BEEN DELETED

TABLE 9.4-9 HAS BEEN DELETED

TABLE 9.4-9 HAS BEEN DELETED

TABLE 9.4-10

AUXILIARY BUILDING HVAC SYSTEM FAILURE ANALYSIS

COMPONENT	MALFUNCTION	RESULTS
Supply, Booster, or Exhaust Fans	Loss of airflow, flowpath (fan motor continues to operate).	An airflow switch sensing high or low differential pressure across the fan actuates an alarm on the main control panel (Supply and Exhaust fans, Byron/Braidwood; at Braidwod, Booster fans actuate alarms on both the main control room and local control panels). An airflow switch sensing high or low flow through the fan actuates an alarm on the main control room control panel (Supply and Exhaust fans, Byron only; Booster fans, Braidwood only). A redundant fan is available for operation, as required.
Supply Filters and Exhaust Filter Plenum Prefilters and HEPA Filters	High pressure drop across filter.	Differential pressure switch sensing filter pressure drop actuates an alarm on the local control panel.* Exhaust Filter Plenum Filters also actuate a corresponding alarm on the main control room control panel.* A standby exhaust filter plenum is available for operation as required.
Charcoal Filter	High leaving air temperature.	Temperature sensing devices sensing leaving air temperature actuates an alarm on the main control room control panel in the event of primary over-temperature condition. A secondary over-temperature condition actuates an alarm on the local control panel.* Local deluge valves are available for manual operation, as required. A standby filter plenum is available for operation, as required.
Control Dampers (Booster Fan)	Normally open damper fails closed.	A fan low flow condition actuates an alarm on the main control room control panel. A fan differential pressure alarm actuates in the main control room and local control panel (Braidwood only).
Ionization Detectors (Supply and Exhaust Fans only)	Ionization Detector fails.	An ionization smoke detector trouble alarm annunciates on local control panel.*

TABLE 9.4-10 (Cont'd)

AUXILIARY BUILDING HVAC SYSTEM FAILURE ANALYSIS

COMPONENT	MALFUNCTION	RESULTS
ESF Pump Cubicle Coolers	Loss of Cubicle Cooler Function	High cubicle temperature alarm is actuated on the main control room control panel when cubicle temperatures exceed the alarm setpoint.

* Any alarm on the local control panel results in a subsequent local panel trouble alarm in the main control room.

TABLE 9.4-11 HAS BEEN DELETED

TABLE 9.4-11 HAS BEEN DELETED

TABLE 9.4-12

DIESEL-GENERATOR FACILITIES VENTILATION SYSTEM

FAILURE ANALYSIS

COMPONENT	MALFUNCTION	RESULTS
Diesel-Generator Room and Day Tank Room - Supply Fan	Loss of airflow, fan motor trip, or high room temperature.	Differential pressure across the supply fan is indicated on the local control panel (LCP) and fan status is indicated on the main control panel (MCP). High or low differential pressure, or fan overload motor trip actuates an alarm on the MCP. Room temperature is indicated on the LCP and high room temperature is alarmed on the MCP.**
Diesel-Generator Room and Day Tank Room - Exhaust Fan	Loss of airflow or fan motor trip.	High or low differential pressure across the exhaust fans, or fan overload motor trip actuates an alarm on the LCP.* Fan status and differential pressure is indicated on the LCP.**
Diesel-Oil Storage Room Exhaust Fans	Loss of airflow, fan motor trip, or high room temperature.	High or low differential pressure across the exhaust fan, or motor trip activates an alarm on the LCP.* Differential pressure, fan status, and room temperature is indicated on the LCP. High room temperature activates an alarm on the MCP.**

TABLE 9.4-12 (Cont'd)

DIESEL-GENERATOR FACILITIES VENTILATION SYSTEM

FAILURE ANALYSIS

COMPONENT	MALFUNCTION	RESULTS
Diesel-Oil Storage Room Exhaust Fan Control Dampers	Normally open damper fails closed.	High or low fan differential press or fan trip activates alarm on the LCP.* (**)
Supply Fan Modulating Dampers	Outside air modulating damper fails open and recirculating air modulating damper fails closed.	Supply fan discharge air temperature is indicated on the LCP and low/high air temperature is alarmed on the MCP.**
Fire Dampers	Dampers fail closed.	High fan differential pressure,fan trip, or high or low temperature is alarmed on the MCP.**

*Any alarm on the local control panel results in a subsequent local panel trouble alarm in the main control room.
** Redundant system is available.

TABLE 9.4-13 HAS BEEN DELETED

TABLE 9.4-13 HAS BEEN DELETED

TABLE 9.4-14

MISCELLANEOUS ELECTRIC EQUIPMENT ROOM VENTILATION SYSTEM

FAILURE ANALYSIS

COMPONENT	MALFUNCTION	RESULTS
Supply and Exhaust Fans (exhaust fans include the main MEER and battery room fans)	Loss of airflow or flowpath (fan motor continues to operate).	An airflow switch sensing high or low differential pressure across the fan actuates an alarm on the local control panel.* A high differential pressure also causes a fan trip (Battery Room Fans at Braidwood do not trip on high DP). A high room temperature condition is alarmed on the main control room control panel when area temperatures exceed the alarm setpoint (MEER only).
	Motor Trip	An auto-trip alarm actuates at the local control panel (exhaust fans only; Battery Room Fans at Braidwood do not trip on high DP).* An auto-trip alarm actuates at the main control room control panel if the Local Remote control switch is in Remote mode (supply fan only).
Filters	High pressure drop across filter.	Differential pressure switch sensing filter pressure drop actuates an alarm on the local control panel.*
Control Dampers (supply fan only)	Control damper fails. (malfunction of supply fan control dampers may affect operation of exhaust fans in addition to the supply fan, as described in the results section)	An airflow switch sensing high or low differential pressure across the fan actuates an alarm on the local control panel.* A high differential pressure condition may also cause a fan trip and subsequent alarms as described previously. A high room temperature condition is alarmed on the main control room control panel when area temperatures exceed the alarm setpoint (MEER only). A low room temperature condition is alarmed on the local control panel when area temperatures fall below the alarm setpoint (MEER only).*

TABLE 9.4-14 (Cont'd)

MISCELLANEOUS ELECTRIC EQUIPMENT ROOM VENTILATION SYSTEM

FAILURE ANALYSIS

COMPONENT	MALFUNCTION	RESULTS
Fire Dampers	Damper fails closed.	An airflow switch sensing high or low differential pressure across the fan actuates an alarm on the local control panel.* A high differential pressure condition may also cause a fan trip and subsequent alarms as described previously. A high room temperature condition is alarmed on the main control room control panel when area temperatures exceed the alarm setpoint (MEER only). A low room temperature condition is alarmed on the local control panel when area temperatures fall below the alarm setpoint (MEER only).
Ionization Detectors (supply fan only)	Ionization Detector fails.	An ionization smoke detector trouble alarm annunciates on local control panel.*

TABLE 9.4-15 HAS BEEN DELETED

TABLE 9.4-15 HAS BEEN DELETED

TABLE 9.4-15 HAS BEEN DELETED

TABLE 9.4-15 HAS BEEN DELETED

TABLE 9.4-15 HAS BEEN DELETED

TABLE 9.4-16

SWITCHGEAR ROOM VENTILATION SYSTEM

FAILURE ANALYSIS

COMPONENT	MALFUNCTION	RESULTS
Supply	Loss of airflow or flowpath (fan motor continues to operate).	An airflow switch sensing high or low differential pressure across the fan actuates an alarm on the local control panel.* A high differential pressure also causes a fan trip. A high room temperature condition is alarmed on the main control room control panel when area temperatures exceed the alarm setpoint (ESF SWGR rooms and CSRs only).
	Motor Trip	An auto-trip alarm actuates at the local control panel (non ESF fan only).* An auto-trip alarm actuates at the main control room control panel if the Local Remote control switch is in Remote mode (ESF fans only).
Filters	High pressure drop across filter.	Differential pressure switch sensing filter pressure drop actuates an alarm on the local control panel.*
Control Dampers	Control damper fails.	An airflow switch high or low differential pressure across the fan actuates an alarm on the local control panel.* A high differential pressure condition may also cause a fan trip and subsequent alarms as described previously. A high room temperature condition is alarmed on the main control room control panel when area temperatures exceed the alarm setpoint (ESF SWGR rooms and CSR only).

TABLE 9.4-16

SWITCHGEAR ROOM VENTILATION SYSTEM

FAILURE ANALYSIS (Cont'd)

COMPONENT	MALFUNCTION	RESULTS
Fire Dampers	Damper fails closed.	An airflow switch sensing high or low differential pressure across the fan actuates an alarm on the local control panel.* A high differential pressure condition may also cause a fan trip and subsequent alarms as described previously. A high room temperature condition is alarmed on the main control room control panel when area temperatures exceed the alarm setpoint (ESF SWGR rooms and CSR only).
Ionization Detectors	Ionization Detector fails.	An ionization smoke detector trouble alarm annunciates on local control panel.*

* Any alarm on the local control panel results in a subsequent local panel trouble alarm in the main control room.

TABLE 9.4-17 HAS BEEN DELETED

TABLE 9.4-17 HAS BEEN DELETED

TABLE 9.4-17 HAS BEEN DELETED

TABLE 9.4-17 HAS BEEN DELETED

TABLE 9.4-18

PUMP HOUSES VENTILATION SYSTEM FAILURE ANALYSIS

COMPONENT	MALFUNCTION	RESULTS
Supply Fans	Loss of airflow or flowpath (fan motor continues to operate).	An airflow switch sensing low differential pressure across the fan actuates an alarm on the local control panel.* A RSH high room temperature condition is alarmed on the local and main control room control panels when area temperature exceed the alarm setpoint.
	Motor Trip	Local/Remote control switch in Local position, no control panel alarms annunciate (CWPH/LSH fans only). An auto-trip alarm actuates at the Turbine Building local control panel if Local/Remote control switch is in Remote (CWPH/LSH fans only).* An auto-trip alarm actuates at the main control room control panel (RSH fans only).
Control Dampers	Control damper fails.	An airflow switch sensing low differential pressure across the fan actuates an alarm on the local control panel.* A high room temperature condition is alarmed on the local and main control room control panels when area temperatures exceed the alarm setpoint. Low fan inlet temperature is alarmed on the local control panel when temperatures fall below the alarm setpoint.* Low fan inlet temperature also results in a fan trip with alarms as described previously (CWPH/LSH only).
Ionization Detectors	Ionization Detector fails.	An ionization smoke detector trouble alarm annunciates on local control panel.*

* Any alarm on the local control panel results in a subsequent local panel trouble alarm in the main control room.

TABLE 9.4-19 HAS BEEN DELETED

TABLE 9.4-19 HAS BEEN DELETED

TABLE 9.4-19 HAS BEEN DELETED

TABLE 9.4-20

OFF-GAS FILTER SYSTEM FAILURE ANALYSIS

COMPONENT	MALFUNCTION	RESULTS
Exhaust Fan	Loss of airflow or flowpath (fan motor continues to operate)	An airflow switch sensing high or low differential across the fan actuates a high differential pressure alarm on the main control room control panel or a low differential pressure alarm on the local control panel.* A high differential pressure also causes a fan trip.
	Motor Trip	An auto-trip alarm actuates at the local control panel.*
Exhaust Filters (prefilters and HEPA filters only)	High pressure drop across filter.	Differential pressure switch sensing filter pressure drop actuates an alarm on the local control panel.*
Charcoal Filters and Electric Heating Coil	High leaving air temperature.	Temperature sensing devices sensing leaving air temperature actuate an alarm on the main control room control panel in the event of primary over-temperature condition (charcoal filters only). A secondary over-temperature condition actuates an alarm on the local control panel (charcoal filters and electric heating coil). Local deluge valves are available for manual operation, as required.
Butterfly Dampers	Loss of instrument air	Filter Unit inlet/outlet dampers fail open, bypass dampers fail closed. An airflow switch sensing high differential pressure actuates an alarm on the local control panel. The same airflow switch also trips the exhaust fan. An exhaust fan motor trip de-energizes the electric heating coil.

* Any alarm on the local control panel results in a subsequent local panel trouble alarm in the main control room. This failure analysis is not applicable to the Braidwood Off-Gas Filter System.

TABLE 9.4-21 HAS BEEN DELETED

TABLE 9.4-21 HAS BEEN DELETED

TABLE 9.4-22

MISCELLANEOUS TANK VENT FILTER SYSTEM FAILURE ANALYSIS

COMPONENT	MALFUNCTION	RESULTS
Exhaust Fans	Loss of airflow or flowpath (fan motor continues to operate).	An airflow switch sensing low differential pressure across the fan actuates an alarm on the local control panel.* the same airflow switch also actuates a fan high differential pressure alarm on the main control room control panel.
	Motor Trip	An auto-trip alarm actuates at the local control panel.* A standby fan is available for operation, as required.
Exhaust Filters	High pressure drop across filter.	Differential pressure switch sensing filter pressure drop actuates an alarm on the local control panel.*
Charcoal Filter	High leaving air temperature.	Temperature sensing devices sensing leaving air temperature actuate an alarm on the main control room control panel in the event of primary over-temperature condition. A secondary over-temperature condition actuates an alarm on the local control panel.* Local deluge valves are available for manual operation, as required.

* Any alarm on the local control panel results in a subsequent local panel trouble alarm in the main control room.

TABLE 9.4-23 HAS BEEN DELETED

TABLE 9.4-23 HAS BEEN DELETED

TABLE 9.4-23 HAS BEEN DELETED

TABLE 9.4-23 HAS BEEN DELETED

TABLE 9.4-23 HAS BEEN DELETED

TABLE 9.4-24

PRIMARY CONTAINMENT VENTILATION SYSTEM FAILURE ANALYSIS

COMPONENT	MALFUNCTION	RESULTS
CRDM Booster Fan, Containment Charcoal Filter Unit Fans, Reactor Cavity Vent Fans	Loss of airflow (fan motor continues to operate).	An airflow switch sensing low differential pressure across the fan actuates an alarm on the main control panel.*
Reactor Containment Fan Cooler Fans (RCFC), Containment Charcoal Filter Unit Fans, CRDM Booster Fans, CRDM Exhaust Fans, Reactor Cavity Vent Fans	Motor Trip	An auto-trip alarm actuates on the main control panel if the Local/Remote control switch is in Remote mode (CRDM exhaust fans only).* A high/low speed breaker trip alarm actuates on the main control panel (RCFC fans only; Local/Remote control switch must be in Remote for high speed trip alarm).* An auto-trip alarm actuates at the main control room control panel (CRDM booster fans, Charcoal Filter Unit fans and Reactor Cavity Vent fans only).
Containment Charcoal Filter Unit Prefilter and HEPA Filters	High Pressure drop across filter.	Differential pressure switch sensing filter pressure drop actuates an alarm on the local control panel.*
Containment Charcoal Filter Unit Charcoal Filters	High leaving air temperature.	Temperature sensing devices sensing leaving air temperature actuate an alarm on the main control room control panel in the event of primary over-temperature condition. A secondary over-temperature condition actuates an alarm on the local control panel.* Local deluge valves are available for manual operation, as required.

*Any alarm on the local control panel results in a subsequent local panel trouble alarm in the main control room.

TABLE 9.4-25 HAS BEEN DELETED

TABLE 9.4-25 HAS BEEN DELETED

TABLE 9.4-25 HAS BEEN DELETED

TABLE 9.4-25 HAS BEEN DELETED

TABLE 9.4-25 HAS BEEN DELETED

TABLE 9.4-25 HAS BEEN DELETED

TABLE 9.4-25 HAS BEEN DELETED

TABLE 9.4-26

PRIMARY CONTAINMENT PURGE SYSTEM FAILURE ANALYSIS

COMPONENT	MALFUNCTION	RESULTS
Supply or Exhaust Fans	Loss of airflow or flowpath (fan motor continues to operate).	An airflow switch sensing low differential pressure across the fan actuates an alarm on the main control room control panel.
	Motor Trip	An auto-trip alarm actuates on the main control room control panel.
Supply and Exhaust Filters	High pressure drop across filter.	Differential pressure switch sensing filter pressure drop actuates an alarm on both the main control room and local control panels.
Heating Coil	Loss of instrument air signal to 3-way Flow Control Valve.	Station Heat flow control valve fails flow through coil. (i.e - Heating coil goes to full heat.)
Control Dampers and Isolation Valves	Normally open damper fails closed.	Interlock causes fan to trip if isolation valves do not remain full open.
Charcoal Filter	High leaving air temperature.	Temperature sensing devices sensing leaving air temperature actuate an alarm on the main control room control panel in the event of primary over-temperature condition. A secondary over-temperature condition actuates an alarm on the local control panel.* Local deluge valves are available for manual operation, as required.

* Any alarm on the local control panel results in a subsequent local panel trouble alarm in the main control room.

TABLE 9.4-27 HAS BEEN DELETED

TABLE 9.4-27 HAS BEEN DELETED

TABLE 9.4-27 HAS BEEN DELETED

TABLE 9.4-27 HAS BEEN DELETED

TABLE 9.4-28

MISCELLANEOUS VENTILATION SYSTEMS FAILURE ANALYSIS

COMPONENT	MALFUNCTION	RESULTS
Supply, Return, or Exhaust Fans	Loss of airflow or flowpath (fan motor continues to operate).	An airflow switch sensing high or low differential pressure across the fan actuates an alarm on the local control panel.* A high differential pressure also causes a fan trip.*
	Motor Trip	An auto-trip alarm actuates at the local control panel.* A trip of the supply fan for any reason results in a subsequent trip of the return fan. A trip of an operating return fan that results in operation of a supply fan in the absence of a return fan will cause U-1/2 Process Computer Room to main control room low pressure condition. The resulting low pressure condition subsequently actuates both local and main control room control panel pressure alarms.
Supply Filters	High pressure drop across filter.	Differential pressure switch sensing filter pressure drop actuates an alarm on the local control panel.*
Heating Coil	Loss of instrument air signal to 3-way Flow Control Valve.	Station Heat flow control valve fails flow through coil. (i.e. - Heating coil goes to full heat).
	Loss of station heat flow.	Low fan inlet temperature is alarmed on the local control panel when temperatures fall below the alarm setpoint.* Low fan inlet temperature also results in a supply fan trip with alarms as described previously.
Humidifiers and Electric Steam Generators	Steam generator internal safety function trips.	Steam Generator trip occurs. Steam Generator trouble alarm actuates on the local control panel.*

TABLE 9.4-28 (Cont'd)

MISCELLANEOUS VENTILATION SYSTEMS FAILURE ANALYSIS

COMPONENT	MALFUNCTION	RESULTS
Control Dampers	Normally open damper fails closed.	An airflow switch sensing high or low differential pressure across the fan may actuate an alarm on the local control panel.* A high differential pressure condition may also cause a fan trip and subsequent alarms as described previously.
Fire Dampers	Damper fails closed.	An airflow switch sensing high or low differential pressure across the fan may actuate an alarm on the local control panel.* A high differential pressure condition may also cause a fan trip and subsequent alarms as described previously.
Ionization Detectors	Ionization Detector fails.	An ionization smoke detector trouble alarm annunciates on local control panel.*

* Any alarm on the local control panel results in a subsequent local panel trouble alarm in the main control room.

TABLE 9.4-29 HAS BEEN DELETED

TABLE 9.4-30

MAIN STEAM PIPE TUNNEL AND SAFETY VALVE ENCLOSURES

HVAC SYSTEM FAILURE ANALYSIS

COMPONENT	MALFUNCTION	RESULTS
Exhaust Fans	Loss of airflow or flowpath (fan motor continues to operate).	An airflow switch sensing low differential pressure across the fan may actuate an alarm on the local control panel.*
	Motor Trip	An auto-trip alarm actuates at the local control panel.*
Control Dampers	Control damper fails.	An airflow switch sensing low differential pressure across the fan may actuate an alarm on the local control panel.*
Ionization Detectors	Ionization Detector fails.	An ionization smoke detector trouble alarm annunciates on local control panel.*

* Any alarm on the local control panel results in a subsequent local panel trouble alarm in the main control room

9.5 OTHER AUXILIARY SYSTEMS

9.5.1 Fire Protection Systems

The design bases, system descriptions, safety evaluation, inspection and testing requirements, personnel qualification, and training are described in Reference 1.

9.5.2 Communication Systems

9.5.2.1 Design Bases

The plant communications systems are designed to provide reliable internal and external communications during normal as well as abnormal operating conditions.

The following communication systems are normally available:

a. a public address system which includes the assembly alarm system,

b. a telephone system which includes access to the "portable pager" system and the station public address system,

c. a sound-powered telephone system,

d. an intraplant radio system,

e. a plant-to-offsite radio system (E-Plan radio system),

f. a microwave system,

g. Emergency Notification System (ENS), and

h. Emergency Response Data System (ERDS).

The following listed work areas are areas on the plant site where it may be necessary for plant personnel to communicate with the control room or the emergency shutdown panel:

a. turbine pedestal areas Units 1 and 2,

b. manual emergency boration valves 1CV8439 and 2CV8439,

c. spent fuel pool area,

d. diesel generators Units 1 and 2,

e. relay house,

f. auxiliary electrical equipment room Units 1 and 2

g. 4-kV (ESF) switchgear room Units 1 and 2,

h. radwaste evaporator control panel area,

i. primary sample room,

j. secondary sample room, and

k. H_2 and stator cooling panel Units 1 and 2.

The locations of the above listed components can be found on Drawings M-6 through M-10.

Communication systems available at the above listed locations are listed in Table 9.5-1.

The public address system is designed so that it provides effective communication between plant personnel in all vital areas during the full spectrum of accident or incident conditions under nominal operating noise levels. Actual demonstrations of the installed system checked for effective communication between plant personnel in all vital areas during nominal operating noise levels. The outcome of these high noise level tests have resulted in some modification to the installation. These tests were conducted after installation work was complete and a copy of this test report is available for onsite review. The power source for the Unit 1 public address system is ESF motor control center 131X2 (1AP25E). The power source for the Unit 2 public address system is ESF motor control center 231X2 (2AP25E).

The dial telephone system consists of PBX equipment and telephone stations located throughout the plant and main control room. The power source for the telephone PBX equipment and the intraplant radio system is the security system motor control center 033W3 (OAP15E). The non-safety-related "normal" a-c supply to 033W3 is backed by a diesel generator which starts automatically upon loss of the "normal" supply.

A "portable pager" system for locating personnel by phone throughout the plant is furnished in conjunction with the dial telephone system. The "portable pager" system a-c power supply is the same as that for the telephone PBX equipment.

Sound-powered telephones may be used in special areas where instrumentation racks and controls are installed. This type of communication is to aid the instrument mechanics when testing and adjusting instrumentation and controls. No power supply is needed.

The intraplant radio system is designed to provide radio communications from a control point (base station) to various hand-held units throughout the plant, and to provide direct radio communications between hand-held units via a repeater system. It is an independent subsystem of the plant communications system. The power source of the intraplant radio is MCC 033W3, which is backed up by the security diesel generator.

The radio system operates on five distinct frequencies during normal operation and two other distinct frequencies during abnormal operations at the 900 MHz level that were licensed by the FCC. The system is designed to operate within the protected area of the plant and contains five radio repeaters, local base stations (DGT9000 radio phone and control station), radio trunking control components, computer components for configuring and monitoring the system, and recording equipment. The system employs a trunking system that allows users to share all five repeaters as opposed to being dedicated to only one repeater in a conventional system.

Radio users are assigned to one or more talk groups based on their job function. Of the 20 talk groups developed, each uses four of the radio repeaters (one repeater is the data line) and has a default repeater in the event of the loss of the trunking system controller. Therefore, in this event, the system reverts to a conventional mode. Persons within a talk group are only able to communicate with others in that same talk group. However, each hand-held unit, base station, and console unit has the capability to communicate on multiple talk groups.

All five repeaters are located above the shift engineer's office (West Turbine Building office at Byron) on elevation 468 feet in the turbine building along column-row L. A single credible fire at this location could disable all repeaters. However, the remaining base stations and hand held radios would remain operable for the fire brigade and security to mitigate the consequences of such a fire.

A functionally operable onsite communication system is assured by the multiplicity of independent subsystems which form the overall onsite communication system. These systems include the following:

a. public address system,

b. automatic telephone system serviced by a local telephone company,

c. sound-powered telephone system, and

d. intraplant radio system.

Reliability is further enhanced by (a) routing the cables for each of these systems separately at Byron and in separate raceways at Braidwood, (b) locating the major equipment for each of these systems in different locations, and (c) utilizing reliable and (where practical) independent sources.

The public address system is provided with multiple amplifiers (typically a separate amplifier for each speaker unit); i.e., the failure of any one amplifier will affect only one speaker unit. In addition, the P.A. system is made of plug-in, modular type components to facilitate quick servicing by replacement.

The intraplant radio system operates on five separate frequencies normally and two additional frequencies during abnormal events as described above.

Emergency offsite backup communication facilities are provided through a licensed emergency two-way radio transmitter and receiver. The power supply to the emergency radio equipment is obtained from a non-safety-related power supply with backup power being provided by the security diesel generator.

The microwave system consists of solid-state, battery-powered equipment designed and engineered primarily for the protective relaying of the transmission system. However, a voice channel is also provided which serves as an additional offsite communication medium. The tones received via this channel have volume, fidelity, and freedom from extraneous noises comparable with the quality normally obtained on a commercial telephone.

Together with the dial telephone system and the emergency two-way radio transmitter and receiver, the microwave system

provides the plant communications system with three diverse offsite communication types, of which a loss of any two types will not jeopardize the total offsite communications system of the plant. This three-system redundancy, therefore, satisfies the compliance to the single-failure criterion.

The Emergency Notification System (ENS) consists of a dedicated telephone connected to the NRC. The ENS phone is located in the Main Control Room with an extension in the Technical Support Center. The ENS phone system is part of the Federal Telephone System which provides telephone communication with the NRC.

The Emergency Response Data System (ERDS) provides direct electronic transmission of a limited set of station parameters from the main computer to the NRC during an emergency.

9.5.2.2 Inspection and Testing Requirements

Prior to being placed in service, the communication systems were operationally tested and a copy of this test is available for onsite review.

The inspection and testing requirements for the communication systems are provided as follows:

a. The plant-to-offsite radio is checked once per day in accordance with the requirements for testing of communications equipment used for security and will be frequency-checked once a year in accordance with the Federal Communication Commission's requirements.

b. The intraplant radio system is checked at the beginning of each security shift in accordance with the requirements for testing of communications equipment used for security and it will be given a frequency-check once a year.

c. The other communication systems are in daily use and will be tested and repaired as needed unless physical protection regulations require additional testing procedure.

9.5.3 Lighting Systems

9.5.3.1 General Design

The plant lighting system can be subdivided into five general categories according to the power source utilized:

a. A-c normal station lighting is the normal lighting system used throughout the plant. It is energized from the normal 480-volt station auxiliary switchgear buses and will remain in operation only as long as the supply from either the unit or the system auxiliary transformer remains in operation. The fluorescent and high pressure sodium vapor

fixtures are operated at 277 volts and are supplied directly from the 480/277-volt, three-phase, four-wire system. Incandescent lighting fixtures are fed from 480/120-volt transformers.

b. A-c essential (or standby) lighting is intended to supply only the lighting required for plant operation during a loss of normal a-c auxiliary power.

It is limited to the lighting required for the control and maintenance of ESF equipment (such as the Braidwood Unit 2 remote shutdown panels, ESF switchgear, emergency cooling equipment, control equipment, etc.) and the access routes to this equipment. It is energized from the 480-Vac ESF buses and thus will receive power from the diesel generators when, and if, the sources of normal a-c auxiliary power fail.

c. Standby (battery-operated) lighting units are provided in various locations in sufficient quantity to provide supplemental lighting in essential equipment areas and fire routes. These units are each equipped with an 8-hour rated battery and lamps which turn on automatically if power to the unit fails. Sufficient 8-hour battery pack lighting is provided to meet requirements of Section III.J of 10 CFR 50 Appendix R. The number and location of 8-hour battery pack lighting units are shown on station lighting drawings, which are available for review onsite.

d. In addition to the 8-hour rated battery-operated units discussed above, d-c emergency lighting consisting of incandescent lamp fixtures is provided in the control room, at stairwells, and at points leading to plant exits. The d-c incandescent lamp fixtures in the control room, turbine room, and stairwells are energized only when the a-c lighting fails so as to avoid excessive operating time on the d-c incandescent lamps.

e. D-c lighting over exit doors is provided on doors exiting from the plant and on doors leading to the plant exits. Each is equipped with a long life lamp and has a battery and battery charger arrangement.

The control room, engineered safety features switchgear rooms, auxiliary electrical equipment rooms, and remote shutdown rooms are provided with emergency lighting for safe shutdown of the reactor and the evacuation of personnel in the event of an accident. The control room and auxiliary electrical equipment rooms are equipped with regular, essential a-c, d-c station battery and d-c 8-hour battery pack lighting. The engineered safety features switchgear rooms are equipped with regular, essential a-c and d-c 8-hour battery pack lighting. The remote shutdown rooms are equipped with regular, essential a-c and d-c 8-hour battery pack lighting.

Emergency lighting with 8-hour minimum battery power supplies is provided, as necessary, for equipment required for safe shutdown and for access and egress routes. The Licensee complies with Section III. J of 10 CFR 50 Appendix R.

Work areas listed in Table 9.5-1 are provided with lighting as listed in Table 9.5-2. Working stations requiring emergency lighting may not necessarily require communication systems.

9.5.4 Diesel-Generator Fuel Oil Storage and Transfer System

9.5.4.1 Design Bases

The design bases for the fuel oil storage and transfer system is to provide each of the two diesel engine generator sets with sufficient bulk storage for 7 days of operation under post-accident generator loads that will occur during the 7-day interval. Day tank storage will provide for approximately 72 minutes running time for each engine when loaded to its nameplate rating. There are two motor-driven fuel oil transfer pumps for each engine, each pump capable of transferring oil from the diesel oil storage tank to its corresponding day tank at sufficient pressure and flow to exceed the maximum demand rate. The system is designed to operate during and after a design-basis seismic event and is designated Category I.

9.5.4.2 System Description

Drawing M-50 is a diagram of the diesel-generator fuel oil storage and transfer system. The fuel oil storage and transfer system complies with ANSI Standard N195 "Fuel Oil Systems for Standby Diesel Generators," with two exceptions discussed below.

The diesel oil storage tanks were sized in accordance with ANSI-N195 using a post-LOCA condition in which the diesel generators experienced the following loading: 100% for 2 hours, 75% for 48 hours, and 50% for 118 hours. A design analysis was performed to determine actual post-LOCA diesel oil consumption and loading profile based on current design conditions and operating procedures. This analysis is updated for changes in EDG loading to verify that each engine will operate for 7 days with the Technical Specification limit of 44,000 gallons in the storage tank.

The diesel oil storage tank fill and vent lines external to the buildings are not safety-related. The four 25,000-gallon diesel oil storage tanks (two 50,000-gallon tanks on Unit 2) are the only safety-related tanks which are required during a tornado. The vents on all tanks are either 2- or 3-inch pipe and exit through the turbine building roof. Impact from tornado missiles will not result in loss of function of the vent. Breakage would occur prior to crimping on pipes of this size. The diesel oil storage tanks are filled from the fuel oil storage tank, rather than from outside connections. The tanks would not require oil addition in the first few days after a tornado which negates the concern about damage to fill lines.

Piping

Excluding vent and drain lines, all fuel oil piping up to the engine is designed to ASME Section III Class 3 requirements in the diesel generator rooms and fuel oil storage tank rooms.

Engine mounted piping is designed to the Cooper-Bessemer standards which are indicated as DEMA Standards. The piping furnished is ASTM A106, Grade B and is acceptable under ANSI B31.1. The piping has been evaluated for seismic loads. Wall thicknesses are dependent on both the seismic and service conditions.

Underground piping in the diesel oil system is protected from external corrosion by the station's Cathodic Protection System and/or by coating/wrapping. High density polyethylene is one coating material used. A filament wound fiberglass jacket including polyurethane insulation may also be used.

Outside Fill and Vent Line

The fill connection is 2 feet above the finished ground level and has a blind flange and is isolated from the remainder of the system by means of two locked closed valves to prevent inflow of water.

The vent pipes exit the turbine building at elevation 490 feet 0 inch.

The end of each vent line is equipped with a flame arrestor which will also prevent entering of rain or snow. In the event that the flame arrestors are damaged, their connecting vent pipes are of sufficient length to serve as effective heat sinks.

To accommodate the requirement for the vent and fill lines to maintain their integrity during design basis seismic events, additional supports have been added to the lines. The lines are protected from tornado missiles inside the auxiliary building.

In the event of damage to the fill or vent lines, the tanks have a welded capped-off 4-inch line in the fill system (see Drawing M-50-1B). This Category I line could be opened and used as either an emergency fill or vent line if required. Additionally, the overflow line (4-inch diameter) would serve to vent the tank. The portion of the overflow line which penetrates the tank is Category I and could be used as a vent.

Tanks

For Unit 1, two 25,000-gallon diesel oil storage tanks are associated with each diesel generator. For Unit 2, a single 50,000-gallon diesel oil storage tank is provided for each diesel generator. The internal surface of the six diesel oil storage tanks have been cleaned and coated with Mobil Series 78 for corrosion protection in accordance with Regulatory Guide 1.137 and ANSI-N195.

The capacity of the storage tank is based upon Regulatory Guide 1.137, paragraph C, Item C, method 2, the time dependent loads of the diesel generator.

A single above grade fill connection is common to the diesel oil storage tanks of each unit. However, normal refill will be from either the 125,000 or 50,000-gallon, Category II storage tank utilizing gravity flow.

In order to minimize turbulence of the sediment in the bottom of the storage tanks during addition of new fuel while the engine is in operation, the following procedure will be followed for Unit 1. The twin diesel oil tanks supplying the Unit 1 emergency diesels, during prolonged periods of operation, will be replenished by refilling one tank with the other tank in service and allowing the refilled tank to settle for 12 hours. This requirement will apply only when the tank to be refilled has been drained below the 50% level.

Since the Unit 2 diesels have only one tank per diesel, the above procedure cannot be followed. Minimization of turbulence in the Unit 2 tanks is accomplished by providing a flow distributor inside each tank on the fill line. This flow distributor consists of a section of pipe capped at the end, projecting approximately 12 inches into the tank and containing a multiple number of holes. The flow distributor acts to minimize turbulence by distributing the flow of new fuel oil over a large surface area in the tank.

Strainers are provided to remove particulate matter should any become mixed in the fuel oil. A strainer has been provided on the fill lines to the diesel oil storage tanks. The strainers are rated 5 micron, 98% removal. In addition, strainers have been provided on the suction of each diesel oil storage tank transfer pump. The rating of those strainers is also 5 micron, 98% removal.

Each diesel fuel oil day tank is 4 feet in diameter with a centerline elevation of 404 feet 7 inches. After flowing through the inlet strainers mounted on the frame of the engine, the oil is piped to the inlet of the engine-drive fuel oil pump, which is at elevation 406 feet 0 inch. Each engine has been factory-tested with a 55-gallon fuel supply drum which provides less favorable head conditions than will be encountered at the stations. The positive displacement engine-driven pumps performed well under factory test conditions. Therefore, the existing day tank location provides adequate pressure at the engine-driven fuel oil pumps.

Fuel Pumps

Two motor-driven fuel oil transfer pumps are provided for each diesel generator. The transfer pumps supply fuel from the diesel oil storage tanks to the fuel oil day tanks. Each motor-driven fuel oil transfer pump is rated at 20 gpm at a discharge pressure of 50 psi when the pump is driven at 1150 rpm. The transfer pump motors are 3-phase, 60-Hz, 460 V, and are rated at 2 Hp. They are powered from 480-V ESF MCCs.

The engine-driven fuel oil pump for each diesel generator is rated at 10 gpm at a discharge pressure of 50 psig. These pumps are driven at 1734 rpm off of the back of the jacket water pump drive. The engine-driven fuel oil pumps have been designed and tested with the fuel supply elevation lower than the pump centerline. These pumps provide a sufficient suction lift to ensure adequate fuel supply to the injection pumps at all times.

During starting, the injection pump for each cylinder is supplied with fuel oil from a small 5-gallon day tank located on the generator end of the engine, above and between the cylinder banks. A check valve prevents drainage of this small supply tank when the diesel is not in operation.

Instrumentation and Controls

Level in the diesel oil storage tank is monitored with a level transmitter and a local level gauge. Low level in the diesel oil storage tank is annunciated in the main control room.

The fuel oil day tank level may be observed with a local level gauge. A level switch will automatically start one of the two transfer pumps when the level of the 4 feet 0 inch diameter by

5 feet 6 inches horizontal day tank decreases to the setpoint. In the event that the level drops another inch, a low level alarm will be annunciated on the diesel control panel and "Engine Trouble" will be annunciated in the main control room. (In general, alarms received at the diesel control panel annunciator are relayed and appear as the "Engine Trouble" alarm in the main control room.) The transfer pumps can also be started by a handswitch on the diesel control panel.

Fuel oil strainers are provided upstream of each transfer pump. The differential pressure across each strainer is monitored by a combination differential switch and indicator, with high differential pressure annunciated on the diesel control panel.

Gravity flow from the day tank supplies fuel to the engine-driven fuel oil pump through a two-element duplex strainer. A combination differential switch and indicator monitors this strainer with high differential pressure annunciated on the diesel control panel. When the alarm occurs, flow is manually diverted through a parallel strainer and new strainer elements will be installed.

A relief valve in the engine-driven fuel oil pump discharge regulates the pressure to the injection pumps. A two-element duplex filter assures clean fuel to the high-pressure injection pumps. A combination differential pressure switch and indicator monitors this filter with high differential pressure annunciated on the diesel control panel. When the alarm occurs, flow is manually diverted through parallel filters and new filter elements will be installed.

Fuel oil supply pressure after the filter is indicated by a pressure gauge on the engine panel (located on the diesel skid). A 1:1 ratio relay transmits a signal to a pressure gauge on the diesel control panel to indicate fuel oil pressure downstream of the filter. Low pressure in the engine fuel oil supply header downstream of the filter will be annunciated on the diesel control panel.

9.5.4.3 Safety Evaluation

Following is a failure analysis of the transfer pump and day tank supply line to the diesel:

Component	Failure	Alternative
1. Transfer Pump	Failure to operate.	One of the two transfer pumps can supply the day tank at the required rate.

2. Day Tank Supply Line to Diesel	Pipe break.	Two diesel generators are available for each unit, each capable of supplying all essential loads individually.

An analysis of the effects of internally generated missiles, high and moderate energy line breaks, and flooding on components of the fuel oil storage and transfer system within the diesel generator room is provided in Subsection 8.3.1.2. Within the diesel storage tank rooms, internally generated missiles are not postulated due to a lack of potential sources. Similarly, no high or moderate energy piping is routed through these rooms. These rooms are protected from flooding in the turbine building by watertight doors. These doors will withstand a flood in the turbine building up to grade elevation.

Spurious actuation of the foam suppression systems due to a seismic event could cause damage to the fuel oil transfer pumps and prevent extended operation of the emergency diesel generators. To prevent this, the foam system has been modified to require manual actuation. This modification eliminates the possibility of a spurious actuation. With this change, the suppression systems are fixed manual suppression systems.

The two diesel fuel oil storage rooms are separated by 3-hour fire walls. The rooms have detection systems which alarm in the control room. In the event of either a fire and loss of offsite power or a seismic event and a single failure of a diesel generator, the emergency power system will remain functional for the duration of the event.

The diesel generator day tanks are enclosed in rooms with 3-hour fire barriers separate from the diesel generators. Each day tank room has an independent carbon dioxide system that is automatically actuated in the event of fire. A 2-foot high curb is provided under the walls to contain any oil spillage. Except where the fuel oil piping connects to the tanks and diesels, the majority of fuel oil supply lines are embedded in the floor surrounding the diesel generators. There are no ignition sources or hot surfaces, which can affect the fuel oil piping.

Some diesel oil system piping associated with one emergency diesel generator is routed through rooms associated with the redundant emergency diesel generator. Each diesel is affected to some extent. Affected piping may include one or more of the following lines: fill lines, drain lines, vent lines, overflow lines, and instrument lines. Calculations have determined that even if this DO piping is unprotected, a fire in this zone does not affect the operability of the redundant diesel generator; therefore, a fire in this zone will not affect the ability to safely shutdown the plant. However, fire wrap is added as a conservative measure on most DO lines associated with the ESF

train credited for safe shutdown. Thus, operability of one of the redundant emergency diesel generators is assured for all postulated design basis events.

9.5.4.4 Inspection and Testing

The diesel-generator fuel oil system is tested to demonstrate its ability to meet the design and operational requirements outlined in Subsection 9.5.4.1. The fuel consumption of the diesel generators was determined during the testing of the unit. The fuel oil system is tested to ensure a fuel supply to the day tank in excess of the maximum consumption rate. Two, 100% capacity transfer pumps satisfy the single active failure criteria.

See Table 14.2-26 for a discussion of the diesel-generator fuel oil system preoperational test.

See Table 14.2-25 and Table 14.2-25a for a discussion of the diesel-generator preoperational test. Fuel oil transfer pump operation is also verified during this test.

Testing of the diesel engine fuel oil storage and transfer system instrumentation and controls is performed on a periodic schedule and, where applicable, in accordance with maintenance and test recommendations made by the equipment manufacturer in the instruction manual.

A blend of Number 1 and Number 2 diesel fuel oil may be used in the diesel-generator engines as discussed in the Technical Requirements Manual (TRM). A diesel fuel oil testing program has been established to implement the required testing of both new fuel oil and stored fuel oil. The program includes sampling and testing requirements and acceptance criteria, all in accordance with applicable ASTM Standards. The purpose of the program is to establish the acceptability of new fuel oil for use prior to addition to the storage tanks by determining that the fuel oil has:

a. an API gravity or an absolute specific gravity within limits.

b. a flash point and kinematic viscosity within limits, and

c. a clear and bright appearance with proper color.

Other properties of new fuel oil are verified to be within limits within 30 days following sampling and addition to the storage tanks. Additionally, total particulate concentration of the stored fuel oil is verified to be ≤ 10 mg/l when tested every 31 days in accordance with Technical Specification Bases 3.8.3 and Technical Requirements Manual Appendix M.

This program also ensures that the system is inspected and condensate is removed from the storage tanks in accordance with applicable NRC guides.

9.5.4.5 Fuel Oil Supply

The principle fuel oil distributor utilized by Exelon Generation Company has many local outlets within 75 miles of the site. Fuel oil is purchased and allocated 1 year in advance of delivery, however, fuel oil is available on an emergency basis from numerous suppliers.

Access to the site under extremely unfavorable environmental conditions, such as flooding, is available by several alternate paths. At Byron the site is located approximately 200 feet above the Rock River. At Braidwood, the site is located approximately 5 miles from the Kankakee River. There is little potential for flooding conditions to develop that will cut off all access to the site.

Other extremely unfavorable environmental conditions such as tornados would not be long lasting and any necessary access routes could be opened in a short period of time. Onsite diesel oil storage is sufficient to allow operation of each diesel generator for well over a week under partial load conditions. This is more than adequate time to replenish the diesel oil supply under the most unfavorable environmental conditions.

Page 9.5-14 has been deleted intentionally.

9.5.5 Diesel-Generator Cooling Water System

9.5.5.1 Design Bases

The engine cooling system is designed for the 2000-hour generator rating of 5935 kW, and the 2-hour out of 24-hour rating of 6050 kW.

9.5.5.2 System Description

The diesel generator sets are described in Subsection 8.3.1. Each diesel engine generator set is equipped with a closed cycle cooling system, consisting of two service water/closed coolant heat exchangers, a standpipe type of reservoir for the closed cycle coolant with automatic level controls for admitting makeup water and an engine-driven jacket water pump used for circulation. The engine-driven jacket water pump circulates closed cycle coolant through the service water/closed cycle heat exchangers, fuel oil and lube oil coolers, combustion air preheaters, and turbocharger aftercoolers in addition to the engine jackets. A motor-driven pump and electric heater circulates electrically heated warm water through the system while the engine is not running, to enhance quick starting capability. Figure 9.5-2 is a diagram of the system.

Connecting auxiliary piping up to the engine is designed to ASME Section III. Engine-mounted components and piping are designed to the Cooper-Bessemer standards which are indicated as DEMA Standards; the piping furnished is ASTM A106, Grade B and is acceptable under ANSI B31.1. The piping has been evaluated for seismic loads. Wall thicknesses are dependent on both the seismic and service conditions.

Pumps and Heat Exchangers

The jacket water heat exchangers are shell and tube type and have removable tube bundles. Engine jacket water flows through the shell and essential service water flows through the tubes. The exchangers are designed to remove heat from engine operation in excess of that generated at 110% engine loading conditions (approximately $12.2X10^6$ Btu/hr) assuming conservative tube and shell side fouling factors. At the 110% engine loading condition, essential service water enters the heat exchanger at a maximum of 100°F and leaves at a maximum of 115°F. The essential service water flow through the heat exchanger is greater or equal to 1650 gpm. Jacket water enters the heat exchanger at approximately 170° F and exits at a maximum of 115°F. Jacket water flow through the heat exchanger is controlled by a thermostatic valve which modulates to maintain engine outlet (or heat exchanger inlet temperature) at approximately 170°F. A system flow diagram is provided in Figure 9.5-2.

Data for lube oil coolers is presented in Subsection 9.5.7. The engine air water coolers (combustion air intercoolers) supply 3.53×10^6 Btu/hr to the jacket water at 110% engine loading conditions. Jacket water enters at a maximum of 115° F and exits at a maximum temperature of 130° F. Data on the small governor lube oil cooler and fuel oil cooler is not available.

Motor-Driven Jacket Water Pump and Heater

The capacity and discharge head of the motor-driven jacket water pump are 175 gpm at 40 feet of head. The pressure indicated at the engine for this flow and head is approximately 5 psig.

The source of power and characteristics for the motor-driven jacket water pump and electric jacket water heater are as follows:

Diesel Generator A

	Source of Power	Characteristics
Motor	Motor Control Center	5 hp, 460-V, 3 phase, 60 Hertz
Heater	Motor Control Center	18 kw, 460-V, 3 phase, 60 Hertz

Diesel Generator B

	Source of Power	Characteristics
Motor	Motor Control Center	5 hp, 460-V, 3 phase, 60 Hertz
Heater	Motor Control Center	18 kw, 460-V, 3 phase, 60 Hertz.

Standpipe

Each emergency diesel generator engine has a standpipe that serves as a vital component for the jacket water cooling system. The purpose of the jacket water standpipe is:

a. provide sufficient net positive suction head (NPSH) for the jacket water circulating pump and the engine driven jacket water cooling pump,

b. provide for expansion of the jacket water coolant in the system as the coolant heats up during operation of the diesel engine,

c. provide a means of deaerating the jacket water coolant by slowing down its motion, and

d. provide a reserve capacity of jacket water coolant to compensate for any minor system losses of coolant even though there is no normal consumption of jacket water.

Based on the height of the jacket water standpipe and its as-built configuration, adequate NPSH will be available to the jacket water cooling pump at the temperature of the system (engine outlet temperature) corresponding to the Jacket Water System Off Normal alarm setpoint of 190°F with standpipe level corresponding to the Low Standpipe alarm setpoint. Station procedures allow diesel engine operation at higher temperatures if required to support the emergency mode operation of the diesel generator. The jacket water high temperature trip (set at 205°F) is bypassed in the emergency mode.

The capacity of the jacket water standpipe is approximately 420 gallons. The top of the standpipe is high enough above the cooling water outlet piping to provide for proper deaeration and thermal expansion of the jacket water coolant. The velocity of fluid in the standpipe is 0.65 ft/sec, which is within the limits specified by the vendor for deaeration. The thermal expansion of the jacket water coolant can also be accommodated within the configuration of the standpipe.

There is no normal consumption of coolant from the jacket water system during operation of the diesel generator. The manufacturer has indicated that the standpipe is large enough to provide for 7 days of continuous operation of the diesel, in the absence of leakage, without makeup to the jacket water system. Leakage is compensated for by makeup from the Demineralized Water system or from alternate sources to support the continued operation of the diesel generator.

Makeup water is normally supplied from the safety Category II demineralized water supply. Station procedures ensure that water can also be added manually should the Category II demineralized water supply ever be unavailable.

Instrumentation and Controls

The standpipe, which serves as a type of reservoir for the closed cycle coolant, is supplied with a level controller for admitting makeup water and a level switch which will annunciate low level in the standpipe on the diesel control panel.

Temperature indicators are mounted on the auxiliary skid piping to monitor inlet and outlet temperature for the jacket water coolers and lube oil coolers, and the jacket water discharge header.

Resistance temperature detectors, connected to the temperature meter on the diesel control panel, are used to monitor the left and right bank turbocharger aftercooler outlet temperature, lube oil cooling water outlet temperature, jacket water cooler outlet temperature, and jacket water inlet and outlet temperature.

A pressure gauge on the local gauge panel and diesel control panel is used to monitor the jacket water pressure directly from the main inlet header. A pressure switch will annunciate low engine-driven jacket water pump discharge pressure on the diesel control panel.

Temperature switches in the jacket water discharge header will annunciate high temperature or low temperature on the diesel control panel. A temperature operated valve in the jacket water discharge header will vent air to a pressure switch in the pneumatic protection system to automatically trip the engine and generator, when the water temperature increases to 205°F if the engine is being operated in the test mode. The jacket water discharge header temperature trip function is bypassed during emergency operation. When the unit is operating in the emergency mode, the diesel control panel will be monitored for abnormal conditions. The annunciator panel will light and an alarm will sound when an abnormal condition exists even though the trip function is bypassed.

9.5.5.3 Safety Evaluation

All subsystems are completely independent for each diesel generator. Failure of a subsystem for one diesel generator does not affect the operation of the other diesel generator.

The jacket water cooler transfers heat from the closed loop water system of the engine to the essential service water

system. A tube rupture would cause essential service water to enter the jacket water system of the engine since the service water system operates at a higher pressure. The consequences of this tube rupture would be that additional water would be placed in the jacket water system, perhaps in sufficient quantities, to cause the volume to expand to the point of overflowing the standpipe. Providing the overflow does not exceed the room drain capacity, there will be no problem.

The lube oil cooler interfaces the lubricating oil of the engine with the closed loop jacket water system. If a tube were to rupture, oil would enter the jacket water system due to the higher operating pressure of the oil systems. Small quantities of oil in the jacket water system will have no detrimental effect. The oil sump low level alarm will indicate excessive leakage from the lube oil system.

In the event of a failure in the cooling water system such as a break of a pipe, the engines will trip under test conditions but will continue to run under postaccident conditions. Inasmuch as there are two mutually redundant diesel engine generator sets per unit, the single failure criterion is satisfied should one diesel engine generator set sustain a failure in its cooling water system.

9.5.5.4 Inspection and Testing

Testing of the diesel engine cooling water system instrumentation and controls will be done on a periodic schedule, and where applicable, in accordance with maintenance and test recommendations made by the equipment manufacturer in the instruction manual.

The procedure developed includes the engine manufacturer's supplied recommendations.

The diesel engine cooling water system instrumentation and controls will be monitored monthly during surveillance testing.

Chemical additives are used to control corrosion of the diesel engine cooling water system. The diesel engine cooling water corrosion inhibitor contains nitrites, borates, and a copper corrosion inhibitor. In addition, a biocide is used to control microbiological growth.

9.5.6 Diesel-Generator Starting System

9.5.6.1 System Description

Drawing M-152 (Byron) and Figure 9.5-3 (Braidwood) provide a diagram of the diesel-generator starting system.

The engine is started using compressed air furnished by two separate air tanks supplied by two separate motor-driven air

compressors mounted on the starting air skid. Each compressor pumps air through a check valve past a relief valve through either a membrane type or a refrigerant type dryer into an air tank. This is a dual system with either half capable of starting the engine.

Components between the air dryer bypass isolation valve and the air supply to air receiver check valve, including the air compressor, are classified Safety Category II, Quality Group D. The compressor motor remains safety related to prevent failure of a non safety related component from affecting a SR bus. The rest of the components on the starting air skid, including the air receiver, are Safety Category I, Quality Group C. The air dryer packages are Safety Category II, Quality Group D. The starting air piping, valves, and components located on the diesel engine generator skid are designed and fabricated in accordance with "Diesel Engine Manufacturers Association Standard Practices for Low and Medium Speed Stationary Diesel Engines."

Air Compressors

A panel on each tank contains a pressure gauge, and pressure switch to automatically start and stop the associated air tank compressor. The compressors can also be started by manually setting the switch on the local control panel to the "HAND" position.

Each compressor is driven by a 15 hp motor and delivers 32.2 cfm to the 65 ft^3 air tanks. Due to the interconnecting starting air piping on the engine generator skid, both tanks should be depleted at the same rate. Therefore, both compressors will start to replenish the air supply at approximately the same time. The pressure switch on each air tank panel starts and stops the compressor at the appropriate pressures. Pressure relief valves are set at a pressure above the compressor shut off pressure but below the equipment's maximum rated pressure. At Byron, there is a time delay associated with the compressor and air dryer alarm and control logic to permit the air dryer refrigeration system to reach normal operational temperatures prior to the compressor starting. At Braidwood, there is a time delay for the compressor start to allow refrigeration type air dryers to reach operation temperature. Air start subsystems with membrane type dryers do not require a time delay on the compressor start. The compressors receive an instantaneous start signal on an emergency start signal to the diesel generators.

The source of power and motor characteristics for the diesel engine air starting system compressors are as follows:

Diesel Engine A

	Source of Power	Characteristics
Air Compressor A	Motor Control Center	15 hp, 460-V, 3 phase, 60 Hertz
Air Compressor B	Motor Control Center	15 hp, 460-V, 3 phase, 60 Hertz

Diesel Engine B

	Source of Power	Characteristics
Air Compressor A	Motor Control Center	15 hp, 460-V, 3 phase, 60 Hertz
Air Compressor B	Motor Control Center	15 hp, 460-V, 3 phase, 60 Hertz

Air Dryer

An air dryer of either the refrigeration type or membrane type is located between each compressor and its respective air tank. The refrigeration type air dryers receive start and stop signals from the pressure switches located on each air tank panel. Lights on the control panel show whether the dryer is running or stopped. Membrane type air dryers do not receive start and stop signals or have lights on the control panel that show whether the dryer is running or stopped. The dryers remove moisture from the air before it enters the tank. At Byron, the dryer package consists of two, air-cooled aftercoolers; a moisture separator; particulate/coalescer filters; two drain traps; and a refrigerated-type air dryer. At Braidwood, the refrigerated-type dryers contain a heat exchanger with two blowers, a separator, and an air dryer with two motors. Three moisture traps are provided in each dryer (one for each major component) at Braidwood. Each of the membrane type air dryer units are equipped with a pre-filter, an after-filter, a membrane type dryer, and the required piping and valves.

Starting Air Control Valve

The starting air control valves are air operated with a single inlet and a double outlet. Air from the tanks must be applied to the inlet of each valve at all times. One normally open outlet supplies the engine control system and the automatic starting system. The normally closed outlet supplies air to the starting air distributor and the starting air valves during a start sequence. During a start sequence, control air is applied to the top of a piston, which overpowers a spring and unseats the valve to admit starting air to the distributor and air start valves.

When the engine starting sequence has been completed, control air is removed from the valve. The spring force then seats the valve and isolates air from the starting air distributor and starting air valves.

Starting Air Distributors

The air distributors act as timers to open and close the air start valves in each cylinder head. The distributors are driven off the forward end of the camshafts by a splined shaft and a

flexible coupling.

The bronze distributor body has an inlet port that is connected to the end of the starting air header on its particular bank.

Ports on the body are connected to the air starting valves according to the firing order of the engine. A steel rotor inside the body turns at camshaft speed. Annular grooves on the rotor are designed to connect with the ports on the distributor body to admit air to the proper port. The inlet port is in position to admit pressure to the top port on the distributor body. As the rotor turns, the next port on the body is uncovered by the groove on the rotor. After each port is closed by the rotor, it is vented. The starting air valves close as air is vented from the distributor through the distributor bracket as the distributor rotor continues to rotate.

Starting Air Controls

Control air is supplied through the normally open outlets of the two starting air control valves. There are two control air isolation points for each supply. The first isolation point is a manual ball valve labeled the Cranking Air Valve. The second isolation point is the turning gear interlock valve. When the turning gear is engaged, control air is isolated to prevent potential engine damage. Downstream of the turning gear interlocks are the starting air solenoids. During a start signal, four starting air solenoids, two per starting air control valve, energize and direct control air to the starting air control valve actuators. The normally closed outlet on the starting air control valve then opens, allowing air to the starting air distributor and starting air valves. When the engine reaches 280 rpm, the starting air solenoids deenergize and vent air from the starting air control valve actuators.

Diesel Engine Starting Sequence

Compressed air from the starting air tanks is applied to two starting air control valves, one on each cylinder bank of the engine. The starting air control valves are controlled by starting air solenoid valves. When the starting air control valves open, starting air is supplied to both banks of air start valves and air distributors. One start valve is located in each cylinder head and all are controlled by the air distributors.

Normally both starting air control valves open simultaneously and air is taken from both tanks. If a malfunction occurs and one of the control valves fails to open, the crossover piping will admit air to the other bank of cylinders. As the air tanks lose pressure, the compressors start to replenish the air supply. If both compressors are inoperative, each individual air tank has sufficient capacity to provide for four starts.

The piping between the air start valve and the air control valve is continuously purged with combustion air during engine operation from the turbocharger discharge. This compressed air, approximately 300° F, prevents the possibility of an

explosion due to a leaky air start valve and prevents any moisture condensation buildup in the air start piping. In the unlikely event that some condensation occurs when the turbocharger purging air cools to ambient temperature, the line filter in the air start piping, located between the air start valve and air distributor, will collect the moisture. (Based on ambient conditions of 120° F and 100% humidity, only 0.09 ounces of moisture can be theoretically condensed inside the approximately 50 feet of 2-inch diameter air start piping.)

The arrangement of the air start piping prevents any possible condensation from accumulating on the air start valves.

Instrumentation

Air tank pressure indicators are located on each air tank panel. In addition, a duplex pressure gauge on the local control panel provides indication for both air tanks. Air tank pressure switches, set at 175 psig (190 psig for starting air subsystems which use membrane type air dryers), feed a starting system low pressure annunciator at the diesel control panel. A temperature switch in the refrigerant system of the air dryer package actuates an air dryer high temperature annunciator at the local control panel. At Byron, an equivalent method may be used to detect temperature by measuring saturated refrigerant pressure in place of the temperature switch. This alarm has been deleted on the starting air subsystems that use membrane type dryers. A starting system malfunction annunciator at the local panel alarms if any of the four starting air solenoids or the two starting air control valves do not actuate. If any of the above annunciators alarm at the local control panel, a D/G trouble/fail to start annunciator alarms in the main control room.

9.5.6.2 Safety Evaluation

In order to preclude fouling of the air start valves, an air dryer has been provided for each starting air compressor. The dryers ensure that air stored under pressure in the accumulators is undersaturated at all local ambient temperatures conditions. In addition, engine-mounted, 40-micron filters are provided on the right and left bank starting air headers. This will preclude the fouling of the starting air valves.

In the event of a failure in the starting air system such as a break of the pipe that cross-connects the headers for the two cylinder banks, there is a second diesel engine generator set for each unit. The system, therefore, meets the single failure criterion.

9.5.6.3 Tests and Inspection

Testing of the diesel engine air starting system instrumentation and controls will be done on a periodic schedule and, where applicable, in accordance with maintenance and test recommendations made by the equipment manufacturer in the instruction manual.

Testing of air start instrumentation is performed every 18 months and the start sequence is tested monthly.

During the Technical Specifications monthly surveillance, the bottom drains on the air receivers will be opened to check for condensate.

9.5.7 Diesel-Generator Lubrication System

9.5.7.1 System Description

The diesel-generator lubrication system is shown diagrammatically in Figure 9.5-4.

The components that are mounted on the auxiliary skid are classified as Safety Category I, Quality Group G and C (Braidwood only); interconnecting piping is Safety Category I, Quality Group C. The piping and components that are located on the engine generator skid are designed and fabricated in accordance with Diesel Engine Manufacturers Association Standard Practices for Low and Medium Speed Stationary Diesel Engines.

General

The primary purpose of the lubrication system is to lubricate bearings and other moving parts. Other functions performed by the oil system are; keeping the engine warm to enhance immediate start-up, cooling the pistons, and keeping the inside of the engine clean by preventing rust and corrosion.

Two oil pumps serve this system, a full capacity main pump and a motor-driven circulating pump.

When the engine is not operating, and during startup, the motor-driven circulating pump furnishes oil to keep the engine warm and to prelube it.

When the engine is running, the engine-driven oil pump takes oil from the sump and pumps it to a thermostatic valve. This valve directs oil through and/or around the oil cooler as the temperature of the oil dictates. A check valve prevents oil from flowing back through the circulating pump. After leaving the thermostatic valve and/or cooler, the oil flows through a filter, strainers and to the engine main header.

A small header, off the inlet end of the main header (at the forward end of the engine) supplies oil to the turbocharger, rocker arm headers, camshaft bearing headers, air distributors and to the forward camshaft bearing on the right bank. The camshaft drive gear on both banks receive oil from the camshaft bearing headers at the drive end. Oil from all these points

with the exception of the turbocharger drains back to the sump by gravity. Oil from the turbocharger is returned to the engine sump by drain piping.

The engine internal oil header runs the length of the engine. From this header, flexible lines supply oil to the main bearing caps. From the main bearings, oil flows through drilled passages in the crankshaft to the connecting rod bearings, through the drilled connecting rods and pins into the piston crowns for cooling. Oil drains from the pistons into the sump.

At the drive end of the main header one flexible line carries oil to the chain tightener sprockets (both banks) and to an oil gallery cast into the center frame. A flexible oil line carries oil to an external header which feeds both camshaft drive sprockets and gear oilers, governor drives, governor drive shafts and camshaft bushings.

The cylinders and pistons are lubricated by oil thrown off the crankpins and by oil vapor in the crankcase.

The rocker shaft headers run the length of the engine and have individual leads which direct oil to the valve rocker shafts of each cylinder head to lubricate the main valve mechanism. From the rocker shaft, oil is directed to each fuel injection pump pedestal to lubricate the pump drive. Excess oil drains by gravity into the main valve push rod compartment to lubricate the crosshead guide, bearings, roller and cam. From the camshaft trough, oil flows by gravity to the sump.

Motor-Driven Circulating Oil Pump and Heater

This pump and heater are used to circulate warm oil through the engine when it is not operating. The pump operates any time engine rpm is below 280 rpm.

Located on the auxiliary skid, the pump is driven by a 15-hp electric motor at 1750 rpm, pumping 120 gpm at a design pressure of 50 psig. The electric heater is controlled by a temperature switch to come on at 120°F decreasing and go off at 130°F increasing.

The source of power and motor characteristics for the motor-driven circulating oil pump are as follows:

Diesel Generator A	Source of Power	Characteristics
Motor-Driven Circulating Oil Pump	Motor Control Center	15 hp, 460-V, 3 phase, 60 Hertz

Diesel Generator B	Source of Power	Characteristics
Motor-Driven Circulating Oil Pump	Motor Control Center	15 hp, 460-V, 3 phase, 60 Hertz

The pump and heater control switches on the control panel are normally set at AUTO for automatic sequential operation, but may be started manually by setting the selector to HAND.

A relief valve set at 50 psig will bypass excess oil back to the suction side of the pump, if necessary.

Main Oil Pump

The main pump is mounted on the forward end of the engine and driven off the end of the crankshaft through a flexible coupling. Pump capacity is 670 gpm at 90 psig at rated engine speed. The pump is protected from reverse flow by a check valve on the suction side. However, should the diesel generator inadvertently run backward, this check valve is designed to relieve pressure on the suction side by opening at 87 psig. The pump is further protected by a relief valve on the pressure side, which is set to relieve at 45 psig above operation pressure.

Thermostatic Valve

The oil inlet temperature to the engine is controlled by a thermostatic three-way valve located ahead of the lube oil coolers. This valve is set at 165°F. As the oil reaches operating temperature, the valve will modulate flow to maintain the temperature at approximately 165°F.

A 1-1/4-inch continuous bypass line around the thermostatic valve and plug valve helps ensure a closer balance between oil and water temperature especially during startup.

Lube Oil Cooler

The lube oil coolers are shell and tube type and have removable bundles. Oil passes through the shell and over the tubes as directed by crossflow baffles. Jacket water circulates inside the tubes.

The exchangers are designed to remove heat from engine operation in excess of that generated at 110% engine loading conditions (approximately 2.64×10^6 Btu/hr) assuming conservative tube and shell side fouling factors. At the 110% engine loading condition, jacket water enters the heat exchanger at a maximum of 133°F, and leaves at a maximum of 146°F. The jacket water flow through the lube oil cooler is equal to that through the jacket water heat exchanger (see Subsection 9.5.5). Lube oil enters the heat exchanger at approximately 165°F and exits at approximately 146°F. Lube oil flow through the heat exchanger is controlled by a thermostatic valve which modulates to maintain engine outlet (or heat exchanger inlet temperature) at approximately 165°F as previously discussed in this subsection.

Full-Flow Filter

The full-flow filter contains 146 replaceable elements which operate in parallel to give the required capacity and degree of filtration. The elements are nominally 2-11/16 inches in diameter by 27 inches long. Rated lube oil flow through clean elements, at normal operating temperatures, results in a pressure drop of less than 5 psi based on the filtration capability of the elements. As the elements become contaminated, the pressure drop will increase. A differential pressure indicating switch provides an alarm function when the differential pressure across the full-flow filter reaches 20 psi.

Lube Oil Strainer

Two oil strainers are mounted on the auxiliary skid in the oil header downstream of the filter. The strainers prevent any foreign particles such as pipe scale, weld slag, rust or debris from a ruptured oil filter from getting into the engine. Each strainer consists of a single case with a cover held down by studs and nuts. The inlet and outlet flanges are 6 inches. An eyebolt in the cover is used for removing the cover and a drain plug in the case permits draining the oil. The basket (element) is a 150-mesh wire screen made of Type 304 stainless steel. At Byron, a differential pressure indicator and switch is used for the lube oil strainer. High differential pressure will be annunciated on the diesel control panel.

Turbocharger Oil Filter

All the oil to the turbocharger is filtered by a duplex filter. A three-way valve directs oil through either or both sides of the filter. Normal operation of the filter is one side open to flow while the other side is clean and standing by.

If turbocharger lube oil pressure falls to 32 psig as a result of a clogged or dirty filter, the three-way valve will be repositioned manually to allow oil to flow through the clean half of the filter.

Oil Pressure (Relief Valves)

There are two relief valves in the system that limit oil pressure. One relief valve, located at the discharge of the main oil pump, operates on a 45 psi differential pressure. Oil is bypassed back to the engine sump if pressure downstream of the strainers is 45 psi less than pump discharge pressure. The primary purpose of this valve is to protect the system at start-up. The other relief valve is set to bypass oil back to the sump when pressure in the main header, just ahead of the main bearings and turbocharger, exceeds 50 psi.

A regulating valve controls oil pressure to the turbocharger at a nominal pressure of 35 psig.

Low Oil Pressure Shutdowns

The engine is equipped with two low oil pressure shutdown devices to stop the engine in case oil pressure drops to 30 psi. These devices are located one in the main header and one downstream of the turbocharger pressure regulator.

Oil Temperature

The desired oil temperature is maintained by the thermostatic three-way valve that directs the flow of oil through the oil cooler.

Temperature indicators are located both up and downstream of the cooler.

Lube Oil Drain Tank and Transfer Pump

The 3000-gallon lube oil drain tank, pump, and purifier is shown on Drawing M-50-4. The equipment is located in the turbine building at elevation 357 feet 6 inches and is designated Safety Category II. The equipment is isolated from each diesel as shown in Drawings M-50-1C and M-50-1D.

The purifier is designed to filter the lube oil to remove all particulate matter 10 microns and larger. A water separator removes all free water. The unit is designed in accordance with Section VIII, Division 1 of the ASME Boiler and Pressure Vessel Code.

The lube oil drain tank transfer pump serves both diesel engines A and B. The pump motor is 7.5 hp, 460-V, 3 phase, 60 Hertz. The transfer pump is rated at 25 gpm at 75 psig.

The lube oil drain tank is equipped with heaters to maintain the lube oil at 150°F. A level switch in the tank automatically stops the pump on low level.

Instrumentation and Controls

When the engine is running, the engine-driven oil pump takes oil from the sump and pumps it to a thermostatic valve which directs oil through and/or around the lube oil coolers as required to maintain the temperature at approximately 165°F. Temperature indicators are located both upstream and downstream of the coolers. Temperature switches will annunciate on the diesel control panel for high and/or low lube oil temperature. When an alarm occurs, the operator will investigate cooling water flow to the lube oil coolers, and proper functioning of the self-contained temperature control valves.

A differential pressure indicator and switch is used for the lube oil filter. High differential pressure will be annunciated on the diesel control panel. When an alarm occurs, the filter elements will be replaced.

At Byron, a differential pressure indicator and switch is used for the lube oil strainer. High differential pressure will be annunciated on the diesel control panel. When an alarm occurs, the appropriate actions to clean the strainers will be taken.

A pressure switch in the main header will annunciate low engine lube oil pressure on the diesel control panel. The engine and generator will be automatically tripped when the lube oil pressure drops to 30 psig if the engine is being operated in the test mode. The engine lube oil pressure switch trip function is bypassed during emergency operation. A pressure switch downstream of the turbocharger pressure regulator will annunciate low turbocharger lube oil pressure on the diesel control panel. The engine and generator will be automatically tripped when the pressure drops to 30 psig if the engine is being operated in the test mode. The turbocharger lube oil pressure switch trip function is bypassed during emergency operation.

Pressure gauges are located on the engine gauge panel and the local control panel to monitor lube oil pressure to the engine and turbocharger.

9.5.7.2 Safety Evaluation

Failure of a diesel system such as lube oil or cooling water, does not affect the operation of the other diesel.

All subsystems are completely independent for each diesel generator. Failure of a subsystem for one diesel generator does not affect the operation of the other diesel generator.

The jacket water cooler transfers heat from the closed loop water system of the engine to the essential service water system. A tube rupture would cause essential service water to enter the jacket water system of the engine since the service water system operates at a higher pressure. The consequences of this tube rupture would be that additional water would be placed in the jacket water system, perhaps in sufficient quantities to cause the volume to expand to the point of overflowing the standpipe. Providing the overflow does not exceed the room drain capacity, there will be no problem.

The lube oil cooler interfaces the lubricating oil of the engine with the closed loop jacket water system. If a tube were to rupture, oil would enter the jacket water system due to the higher operating pressure of the oil systems. Small quantities of oil in the jacket water system will have no detrimental effect. The oil sump low level alarm will indicate excessive leakage from the lube oil system.

9.5.7.3 Tests and Inspections

Testing of the diesel engine lubrication oil system instrumentation and controls will be done on a periodic schedule and, where applicable, in accordance with maintenance and test recommendations made by the equipment manufacturer in the instruction manual.

Lube oil system instrumentation and controls are monitored during Technical Specifications monthly surveillance of the diesel generators.

Diesel lube oil is sampled and analyzed in accordance with the recommendations in the diesel generator instruction book.

Lube oil leakage is observable via sight glass, low level alarm, visual observation of floor and jacket water samples.

Oil addition to the diesels is directed by station personnel who have been trained as described in Subsection 13.2.1.3.3. This training includes emphasis on the cleanliness requirements for lube oil addition. The manufacturers requirements in this area are included in this training to ensure proper maintenance of the diesels.

9.5.8 Diesel-Generator Combustion Air Intake and Exhaust System

9.5.8.1 Design Basis

The basis for design is that intake air is available to each diesel engine generator set under all design basis conditions including design-basis seismic events, tornados, and tornado missile impact. The diesel engine exhausts are located so that combustion products do not mix with fresh combustion air entering the supply plenums for the diesel engines. The diesel engine exhaust systems are designed to remain functional under all conditions described previously for the intake air supply systems.

9.5.8.2 System Description

General

The intake and exhaust piping external to the diesel generator are fabricated from ASTM A 155 KC65CL and ASTM A 155 CM65 materials, respectively. These materials are also acceptable ASME Section III materials. Field welding of the piping was done using certified rod and qualified welders. The piping, designed to remain functional during seismic conditions, meets the analysis requirements of ANSI B31.1, and is only subjected to low working stresses.

The quality of the welds in this piping was originally verified with undocumented visual inspection. Much of the piping is inaccessible for reinspection after installation. Portions can be inspected, however, and at least 10% of the exhaust piping welds on each diesel generator have been subjected to the magnetic-particle testing required for ASME Section III Class 3 piping. If repairs were found to be necessary because of these inspections, all accessible exhaust piping welds were magnetic-particle tested and repaired as necessary.

Since the application of this piping does not involve any pressure considerations (less than 5 psig), the Licensee concludes that the existing design and installation of this piping is equivalent to a system designed to ASME Section III Class 3 requirements.

Combustion Air Intakes

The same plenum that supplies ventilating air to an individual diesel engine generator room, is used as a source of combustion air for the diesel engine generator set. The plenum is missile protected. The turbocharger for each diesel engine generator set draws combustion air through an intake air filter located in the wall of the plenum. The turbocharger is driven by the energy contained in the exhaust gases of each cylinder, so that combustion air requirements are satisfied under all load conditions. In addition to the stoichiometric requirements for complete combustion of the fuel, approximately 40% excess air is supplied by the turbocharger so that complete combustion is assured under all operating and transient load conditions.

The diesel-generator building combustion and cooling air intakes are located on the roof of the auxiliary building. The room exhausts are directed into the turbine building. The combustion air is piped directly to each diesel so there is no mixing of combustion air and room air in the diesel-generator rooms. Combustion products from a fire in any diesel-generator room will have no effect on the operation of any diesel-generator.

Operation of the CO_2 fire protection system will likewise have no effect on diesel generator operation, however, manual action will be required to restore the diesel-generator room ventilation.

The diesel generator air intakes (combustion and ventilation air) are completely independent for the two redundant diesel generators. The air intakes on the auxiliary building roof are separated. In the event of complete failure of an intake fire damper, the diesel generator room vent fan could continue to run until the diesel generator was shut down or until closure of exhaust fire dampers caused an increase in exhaust pressure. Motor operated intake dampers do not automatically close when the fan is tripped. Therefore, under certain low temperature conditions, it is possible for smoke to enter and

travel up the air intake stack. In the event of a fire, however, the fire dampers located adjacent to the motor operated dampers will close, isolating the Diesel Room from the air intake stack.

Drawing M-364-1 shows a plan view of the diesel generator combustion air intakes and the exhaust piping. An elevation view is shown in Drawing M-364-2. The relief valve vent stacks are shown in Drawing M-425.

The louvered air intakes for each diesel-engine generator set are located on a vertical wall on the roof of the auxiliary building and are so arranged that clogging is not likely to occur. Although the exposure has been minimized, flow paths must be maintained at all times. The louver blades, therefore, cannot be protected by screens or other devices when the engine generator set is not in use.

The diesel-engine exhaust pipes have been terminated at an elevation sufficiently above and away from the louvered air intakes to prevent a significant reduction of oxygen in the combustion air. Moreover, the engine is supplied with 40% excess air, and the degree of contamination required to cause incomplete combustion is extremely unlikely.

Drawings M-364 and M-425 more clearly illustrate the locations of the relief valve vent stacks in relation to the diesel-generator combustion air intakes. The relief valve vents are above the air intakes and do not discharge directly toward the intakes. Diesel operation will not be degraded. Also, the louvers will act as baffles to keep most of the moisture from entering the intakes.

As can be seen in Drawings M-364 and M-425, the relief valve stacks are located approximately 31 feet from the air intakes. The stacks are 28 inches in diameter and 1/2 inch thick. A tornado missile will not impart damage on these stacks, which would affect diesel generator operation.

The Diesel Generator air intake structures are adequate to assure a clean air supply in case of a fire in the Station Auxiliary Transformers (SATs).

The transformers are all a minimum of 50 feet horizontally and 70 feet vertically from the nearest diesel air intake structures opening on the roof of the auxiliary building.

As stated above, 40% excess air is supplied to each diesel generator. Therefore, an extraordinarily large quantity of smoke and noncombustible gases would be required to affect the diesel performance. In addition, the environmental conditions necessary to transport transformer fire combustion products to the diesel air intakes would dilute the concentration of these noncombustibles such that diesel operation would be unaffected.

Diesel Engine Exhausts

Drawing M-364-1 clearly illustrates the diesel exhaust stacks arrangement. All horizontal piping including silencer is protected by concrete. The vertical portion of the stack outside along the wall is not missile protected.

The diesel generator exhausts are completely protected up to the point where they penetrate the tornado proof concrete enclosure on the auxiliary building roof. Above this point, they are exposed for about 35 feet as they travel vertically. Analysis has established that the stacks can be damaged to the extent that the flow area is reduced to 50% of the original flow area without reducing the diesel power output.

To prevent the stacks from being damaged to the extent that diesel performance is reduced, positive action has been taken to ensure operability in spite of tornado missile impact.

Each exhaust pipe has a short vertical run and terminates in an elbow with the elbow outlet in a vertical plane. This minimizes the buildup of ice and snow that would tend to restrict the exhaust outlet, and prevents precipitation from entering the exhaust pipe.

In the event that the diesel exhaust stacks are blocked or crushed such that diesel backpressure is increased, rupture discs located within the missile protected enclosure on the auxiliary building roof will burst providing adequate flow for full power from the diesels.

Instrumentation and Controls

One temperature indicator and one resistance temperature detector are located in each of the two intake inlet manifolds. The resistance temperature detectors are connected to the temperature meter on the diesel control panel. A temperature test well is also located in each intake manifold.

Thermocouples are used to monitor the exhaust temperature out of each cylinder and exhaust temperature in and out of the turbocharger. The thermocouples are connected to a temperature meter on the diesel control panel.

Inlet manifold pressure and turbocharger outlet pressure are displayed by a pressure indicator on the diesel control panel.

The exhaust system has no interlocks or alarm instrumentation. A high filter differential pressure alarm is actuated by an air inlet filter dP switch, which is set at 2.7 inches water. Other instrumentation/interlocks include a temperature controller that regulates the amount of jacket water flow through the jacket water coolers and air intake intercoolers, based on temperature of the right bank air manifold intake air.

9.5.8.3 Safety Evaluation

The louvered air intake for each diesel engine generator set is located such that a tornado missile could cause partial obstruction of flow of ventilating and combustion air to one diesel engine generator set. However, there are two diesel engine generator sets per unit, and disruption of air flow to one set will not prevent the other set from performing its safety-related function. The diesel engine exhaust pipes are exposed to tornado missiles above the elevation of the air intake louvers. In the event that all exhaust pipes are impacted by a single tornado missile the combustion and ventilating air for each engine would not be diluted with combustion products to the extent that loss of function would occur. There are no high energy lines in the vicinity of the engine exhaust lines.

9.5.8.4 Inspection and Testing Requirements

The diesel engine exhaust lines and exhaust silencers are Safety Category I, Quality Group G and do not require inservice inspection. The combustion air intake and exhaust systems cannot be tested independently of the diesel engine generator sets. The air inlet filters are cleaned or replaced on a scheduled basis.

Testing of the diesel engine air intake and exhaust system instrumentation will be done on a periodic schedule and, where applicable, in accordance with maintenance and test recommendations made by the equipment manufacturer in the instruction manual.

The air intake and exhaust system instrumentation will be monitored during the Technical Specifications monthly surveillance of the diesel generators.

9.5.9 References

1. Commonwealth Edison Company, "Byron/Braidwood Stations Fire Protection Report in Response to Appendix A of BTP APCSB 9.5-1" (current amendment).

TABLE 9.5-1

COMMUNICATION SYSTEMS

	TURBINE PEDESTAL AREAS	LOCATION
	UNIT 1	
Type -	Public Address System	E-12, K-15
	Telephone	K-12
	Sound Powered Phone	E-10
		Turbine Building 451 ft
	UNIT 2	
Type -	Public Address System	E-24
	Telephone	K-24
	Sound Powered (Jack)	E-26
		Turbine Building 451 ft
	MANUAL EMERGENCY BORATION VALVES UNIT 1 (1CV8439)	
Type -	Public Address System	Q-17
	Telephone	U-17
	Sound Powered (Jack)	S-17
		Aux. Bldg. Mezz. 426 ft and 439 ft
	UNIT 2 (2CV8439)	
Type -	Public Address System	U-19
	Telephone	Q-19, U-19
	Sound Powered (Jack)	S21
		Aux. Bldg. Mezz. 426 ft and 439 ft
	SPENT FUEL POOL AREA	
Type -	Public Address System	Y21
	Telephone	Y21, Y15
	Sound Powered (Jack)	Y21
		Fuel Handling Bldg. 426 ft.
	DIESEL GENERATORS	
Type -	Unit 1 - A	P7
	Telephone	P7
	Sound Powered (Jack)	
Type -	Unit 1 - B	N10
	Telephone	P10
	Sound Powered (Jack)	
Type -	Unit 2 - A	N26
	Telephone	N26
	Sound Powered (Jack)	

TABLE 9.5-1 (Cont'd)

	TURBINE PEDESTAL AREAS	LOCATION
Type -	Unit 2 - B	N29
	Telephone	N29
	Sound Powered (Jack)	Aux. Bldg. 401 ft
	AUXILIARY ELECTRICAL EQUIPMENT ROOMS	
	UNIT 1	
Type -	Telephone	P11
	Sound Powered (Jack)	N11
	UNIT 2	
Type -	Public Address System	N23
	Sound Powered (Jack)	N23
		Aux. Bldg. 451 ft
	4-kV (ESF) SWITCHGEAR ROOMS	
	UNIT 1	
Type -	Telephone	L6, L8, P7,
	Sound Powered (Jack)	P9, P6, P8
	UNIT 2	
Type -	Telephone	P29, P27, L30,
	Sound Powered (Jack)	L28, N28, N26
		Aux. Bldg. Mezz.
		426 ft & 439 ft
	RADWASTE EVAPORATOR CONTROL PANEL	
Type -	Public Address System	N25
	Telephone	N25
	Sound Powered (Jack)	N24
		Aux. Bldg. 383 ft
	SECONDARY SAMPLE ROOM	
Type -	Public Address System	D18
	Telephone	D18
		Turb. Bldg. 401 ft
	PRIMARY SAMPLE ROOM	
Type -	Public Address System	L14
	Sound Powered (Jack)	M13
	Telephone	L14
		Aux Bldg 401 ft
	HYDROGEN AND STATOR COOLING PANELS	
	UNIT 1	
Type -	Public Address System	F4
	Telephone	E4
	Sound Powered (Jack)	E4

TABLE 9.5-1 (Cont'd)

	TURBINE PEDESTAL AREAS	LOCATION
	UNIT 2	
Type -	Public Address System	F32
	Telephone	E32
	Sound Powered (Jack)	E32
		Turb. Bldg. Mezz. 426 ft
	RELAY HOUSE	
Type -	Public Address System	Switchyard
	Telephone	

TABLE 9.5-2

VITAL AREA LIGHTING

	NORMAL LIGHTING		BACKUP LIGHTING
	REGULAR LIGHTING	AC ESS. LIGHTING	125-VDC LIGHTING AND/OR BATTERY PACK
Turbine Pedestal Areas Units 1 and 2	Yes	No	Yes
Manual Emergency Boration Valves 1CV8439 and 2CV8439	Yes	No	No
Spent Fuel Pool Areas	Yes	Yes	No
Diesel Generators Units 1 and 2	Yes	Yes	Yes
Relay House	Yes	No	No
Auxiliary Electrical Equipment Room Units 1 and 2	Yes	Yes	Yes
4-kV (ESF) Switchgear Room Units 1 and 2	Yes	Yes	Yes
Radwaste Evaporator Control Panel Area	Yes	Yes	Yes
Primary Sample Room (401')	Yes	Yes	No
Secondary Sample Panel (426')	Yes	No	No
H2 and Stator Cooling Panel Units 1 and 2	Yes	No	1No

1 Battery pack located within 100 feet.

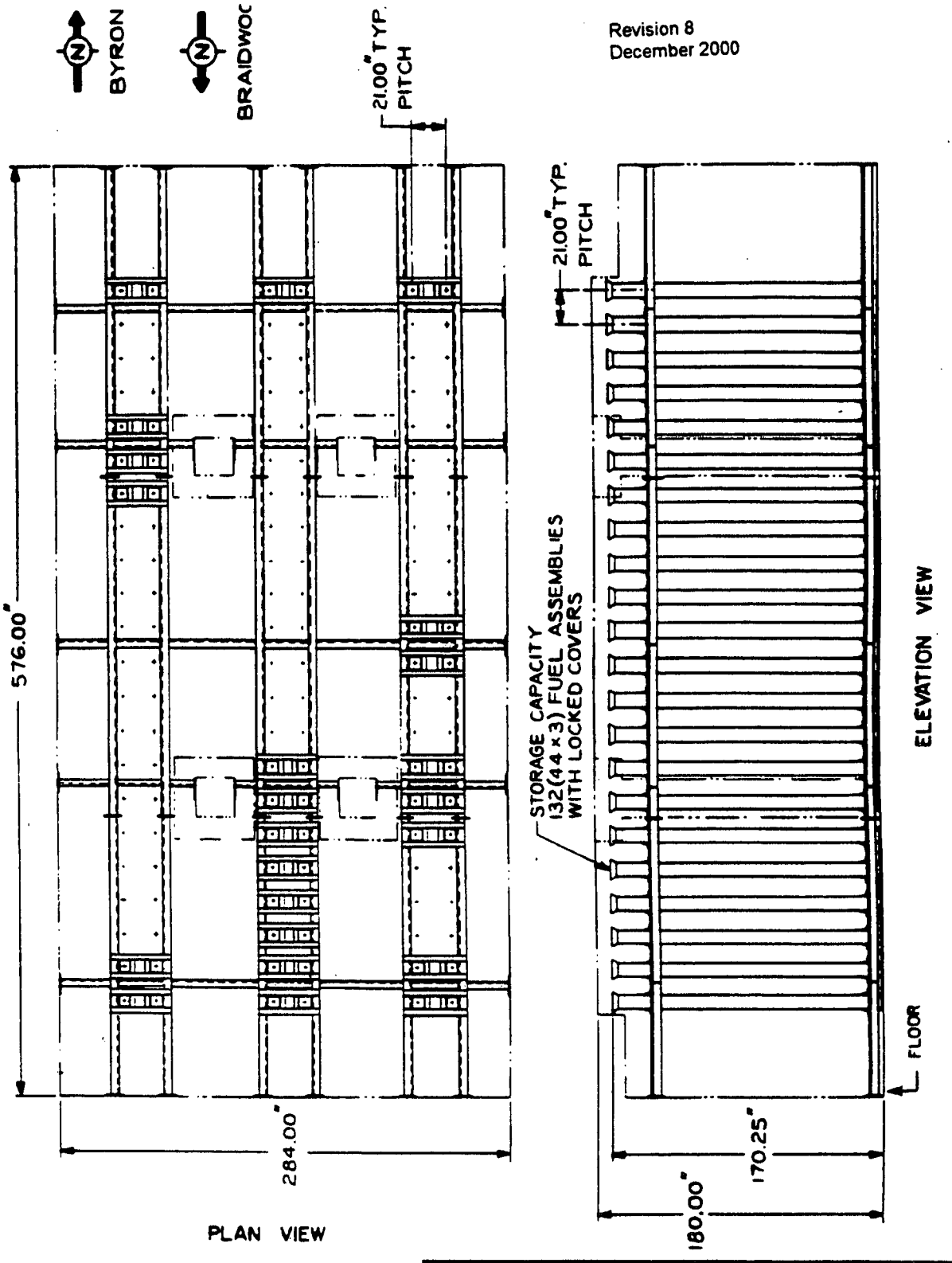

BYRON/BRAIDWOOD STATIONS
UPDATED FINAL SAFETY ANALYSIS REPORT

FIGURE 9.1-1

NEW FUEL RACK INSTALLATION

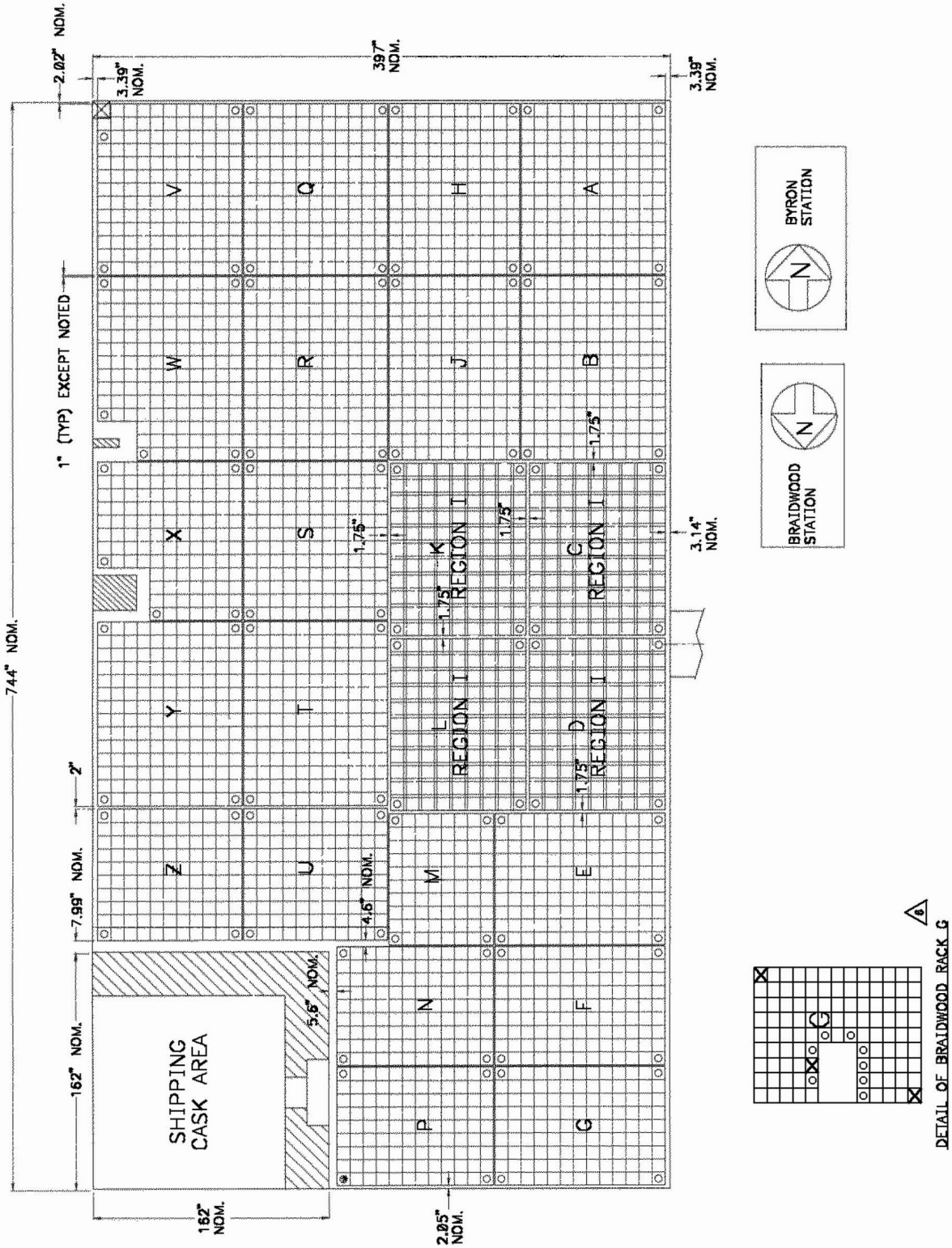

BYRON / BRAIDWOOD STATIONS
UPDATED FINAL SAFETY ANALYSIS REPORT

FIGURE 9.1-2

SPENT FUEL STORAGE
RACK ARRANGEMENT

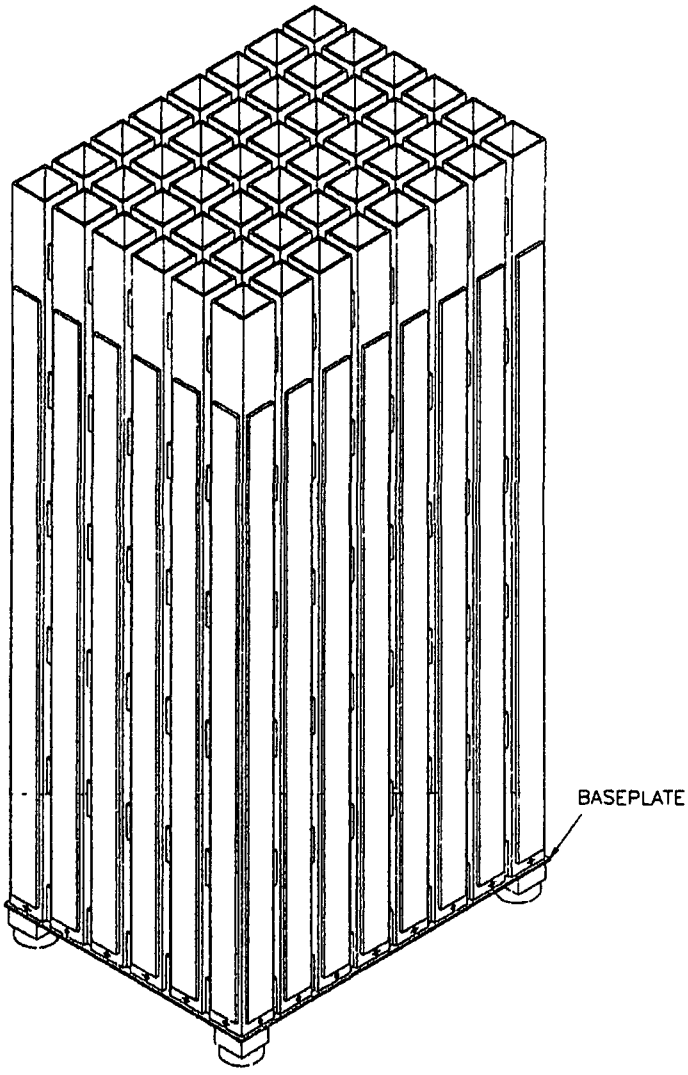

NOTE:
LEAD-INS AT
BRAIDWOOD STATION
NOT SHOWN.

BYRON / BRAIDWOOD STATIONS
UPDATED FINAL SAFETY ANALYSIS REPORT

FIGURE 9.1-3

TYPICAL RACK ISOMETERIC
REGION 1

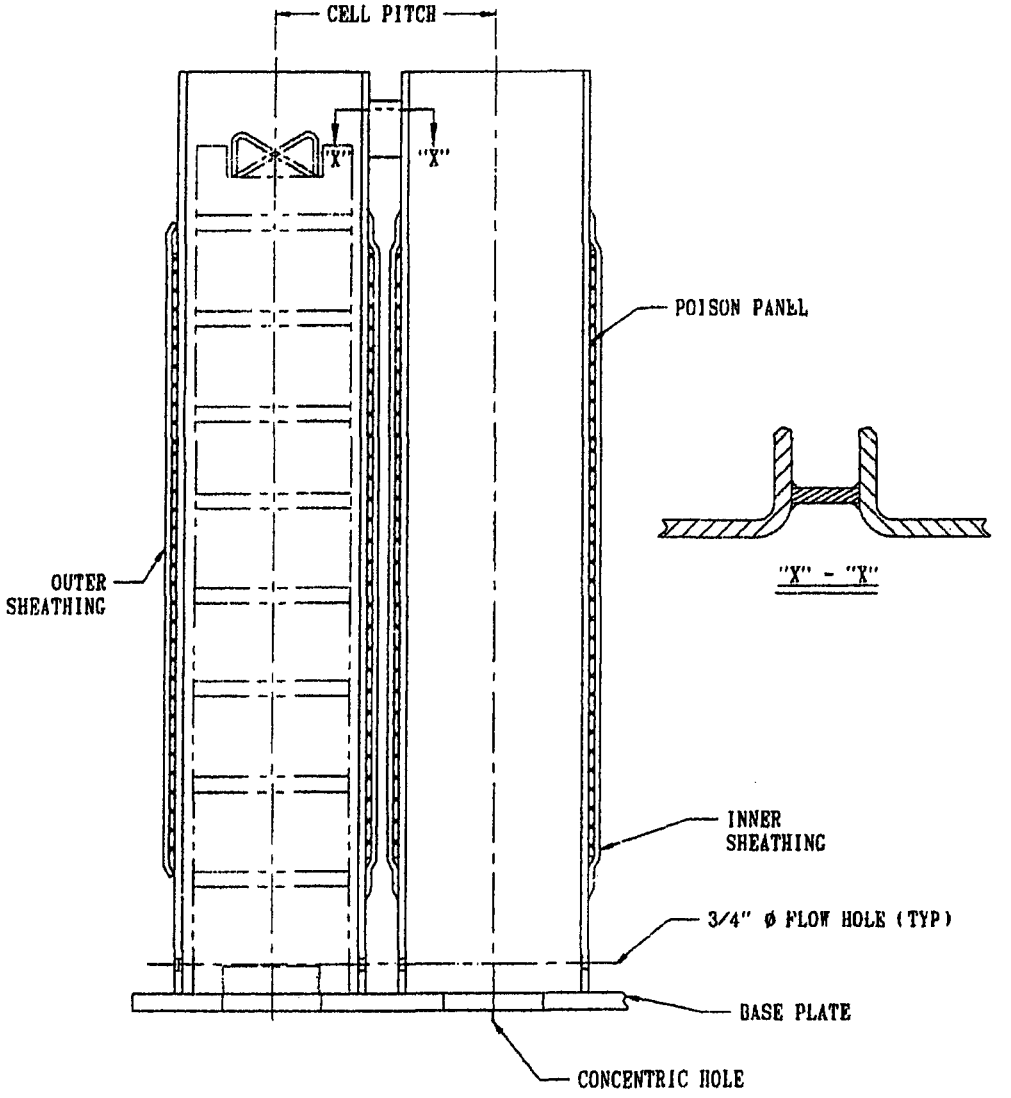

BYRON / BRAIDWOOD STATIONS
UPDATED FINAL SAFETY ANALYSIS REPORT

FIGURE 9.1-4

TYPICAL CELL ELEVATION
REGION 1

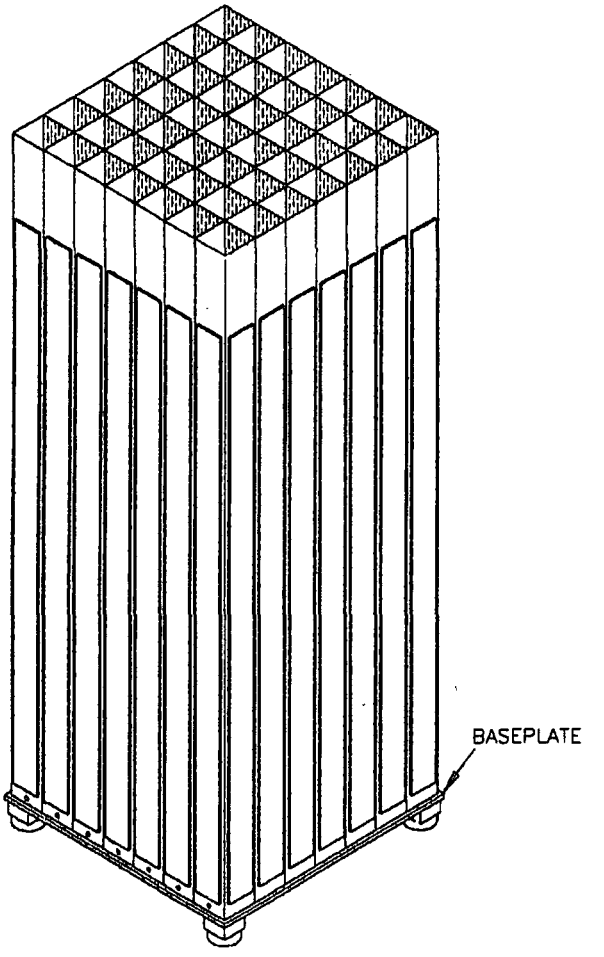

BYRON / BRAIDWOOD STATIONS
UPDATED FINAL SAFETY ANALYSIS REPORT

FIGURE 9.1-5

TYPICAL RACK ISOMETRIC
REGION 2

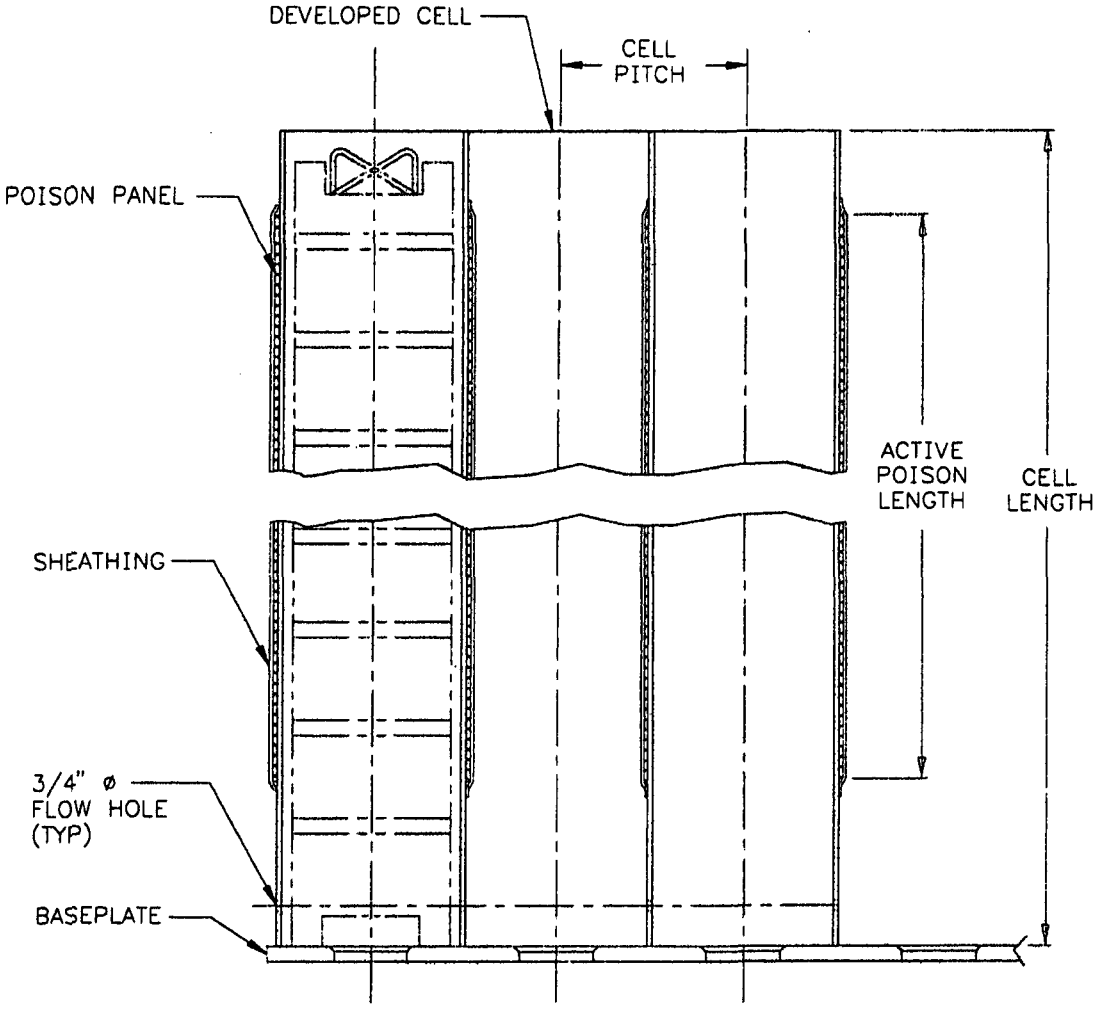

BYRON / BRAIDWOOD STATIONS
UPDATED FINAL SAFETY ANALYSIS REPORT

FIGURE 9.1-6

TYPICAL CELL ELEVATION
REGION 2

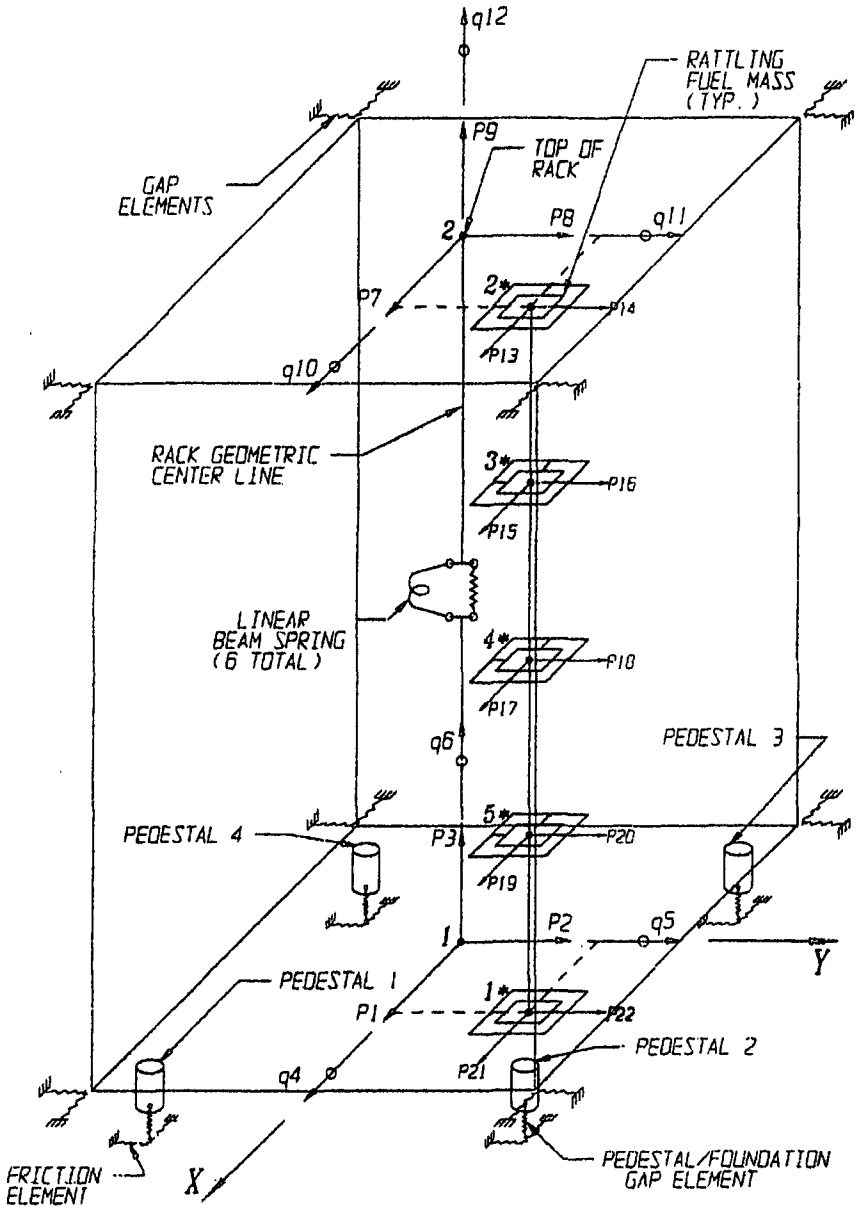

BYRON / BRAIDWOOD STATIONS UPDATED FINAL SAFETY ANALYSIS REPORT
FIGURE 9.1-7 DYNAMIC MODEL

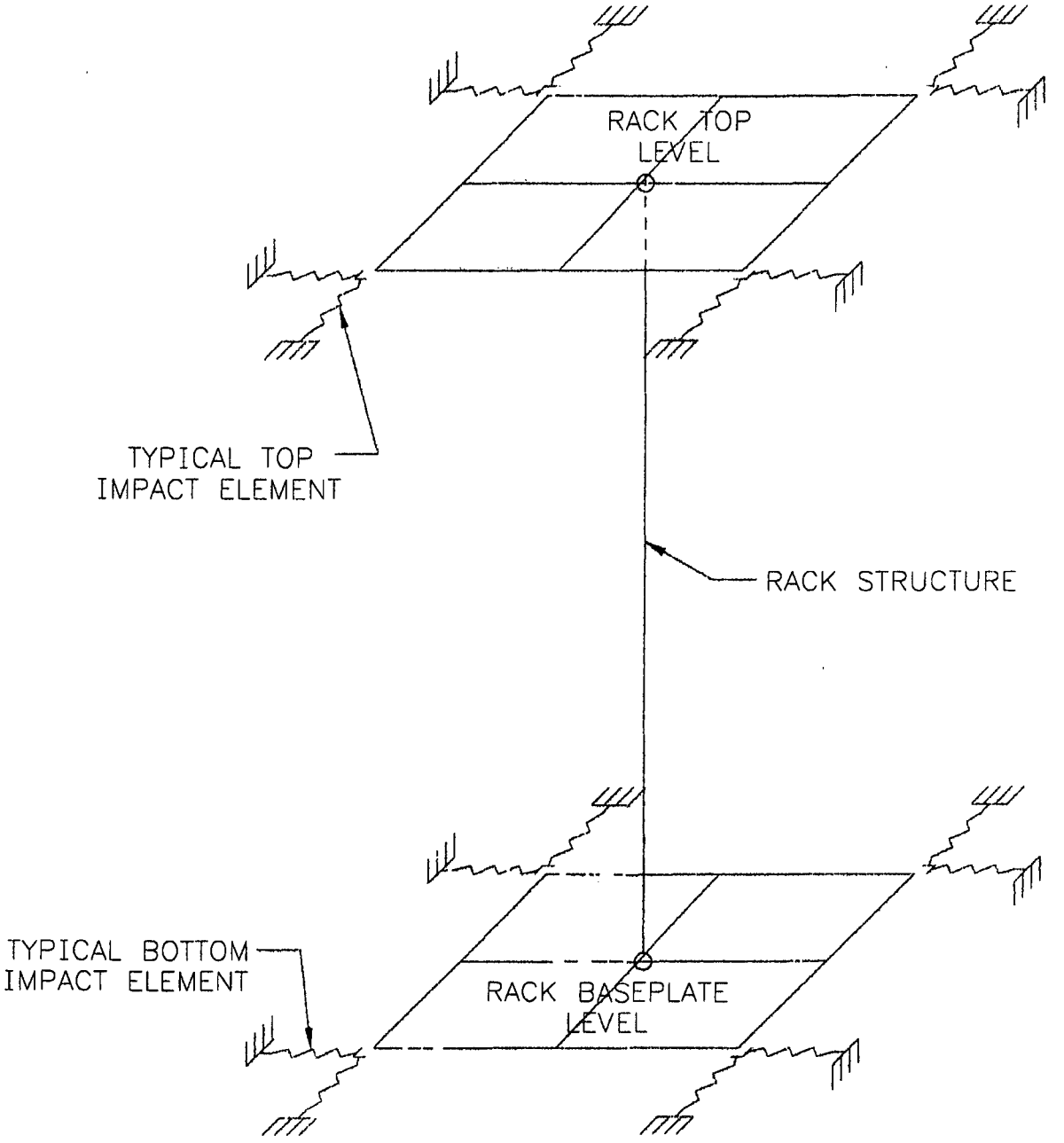

BYRON / BRAIDWOOD STATIONS UPDATED FINAL SAFETY ANALYSIS REPORT
FIGURE 9.1-7a GAP ELEMEMTS TO STIMULATE INTER-RACK IMPACTS FOR MODEL

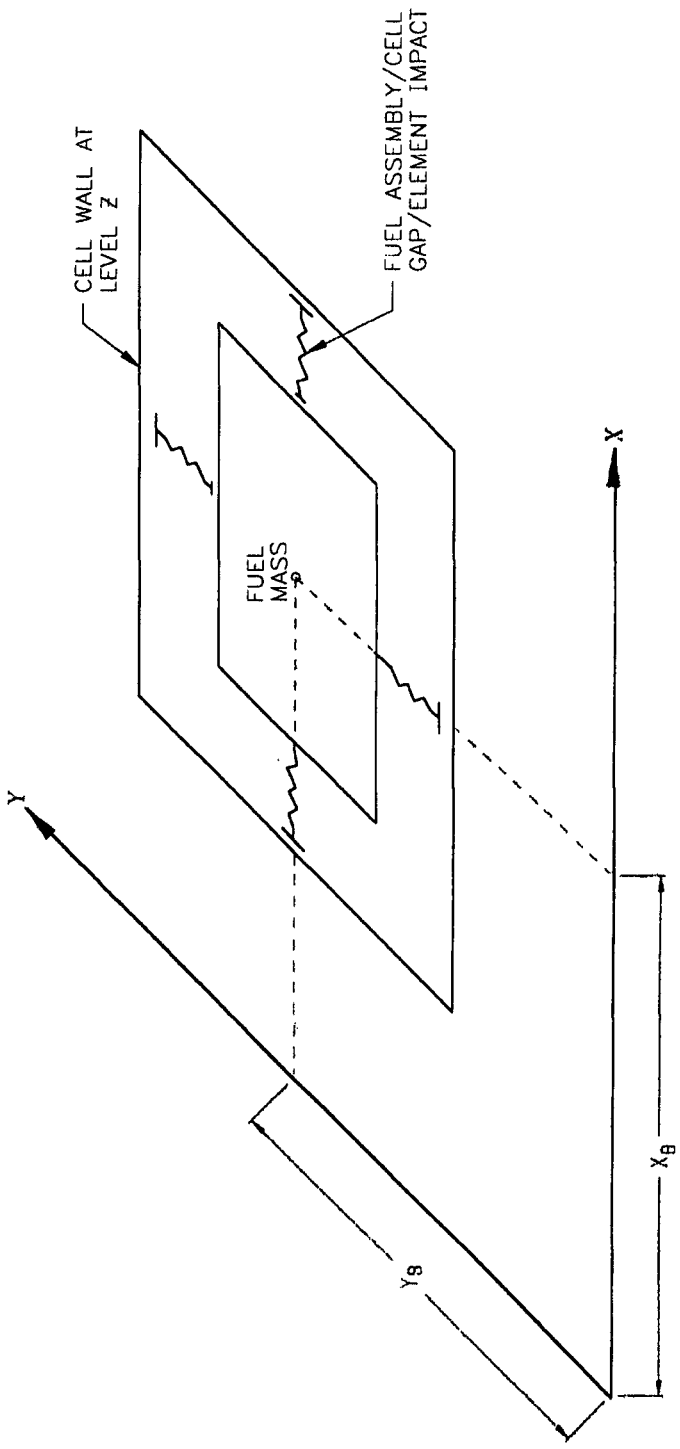

BYRON / BRAIDWOOD STATIONS
UPDATED FINAL SAFETY ANALYSIS REPORT

FIGURE 9.1-7b

FUEL ASSEMBLY / STORAGE CELL
IMPACT SPRINGS FOR MODEL

Figures 9.1-7c through 9.1-7g has been deleted intentionally.

Figures 9.1-7 through 9.1-9a have been deleted intentionally.

Figure 9.1-10 through 9.1-10d have been deleted intentionally.

Figure 9.1-11 has been deleted intentionally.

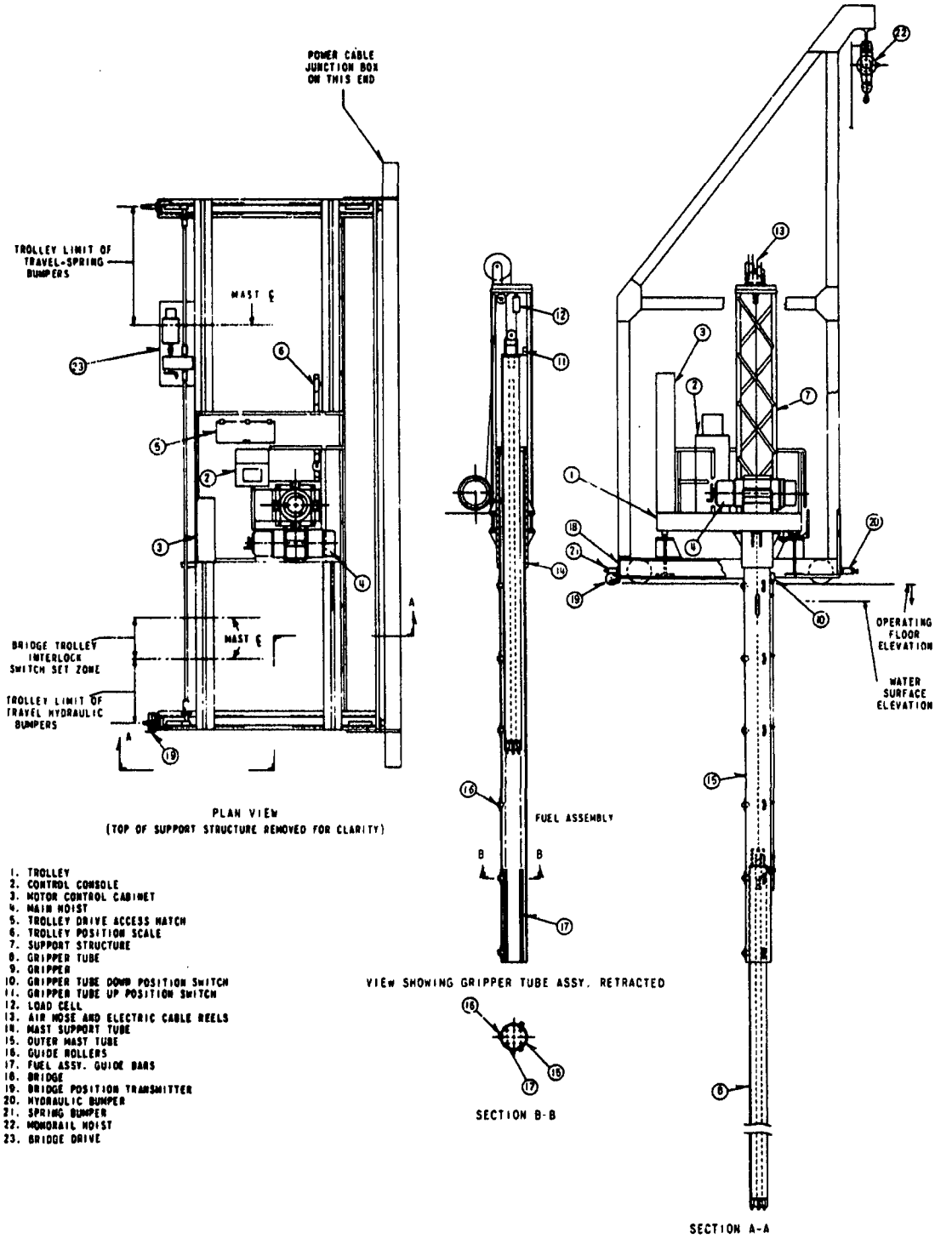

BYRON/BRAIDWOOD STATIONS
UPDATED FINAL SAFETY ANALYSIS REPORT

FIGURE 9.1-12

REFUELING MACHINE

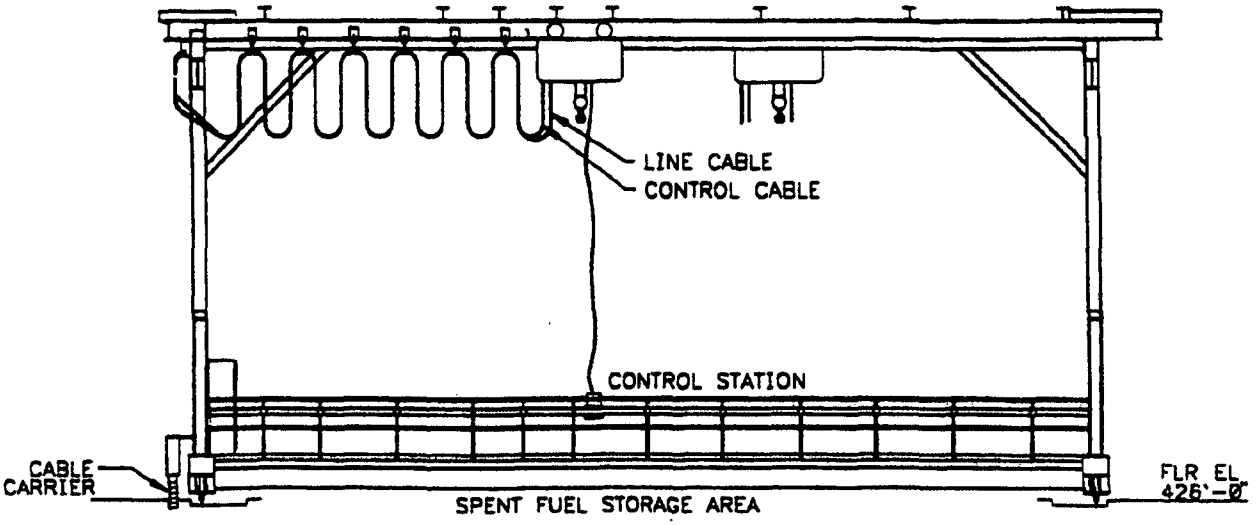

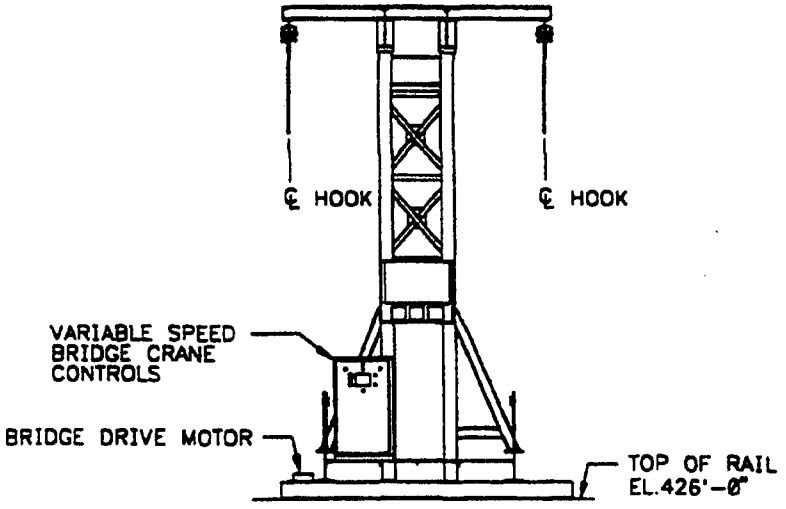

BYRON/BRAIDWOOD STATIONS
UPDATED FINAL SAFETY ANALYSIS REPORT

FIGURE 9.1-13

SPENT FUEL POOL BRIDGE CRANE

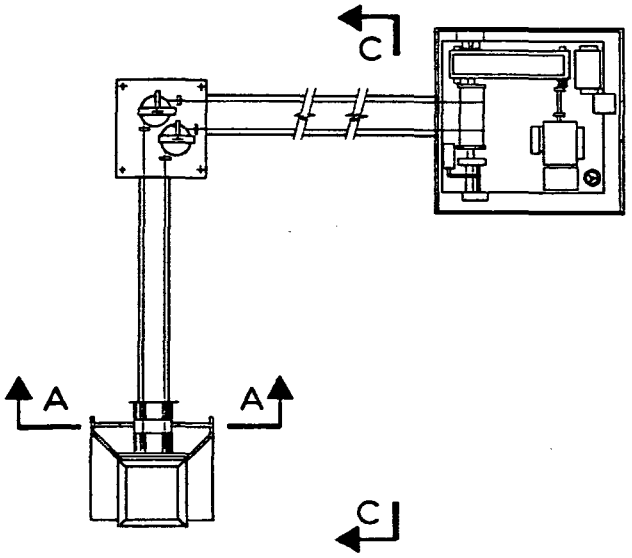

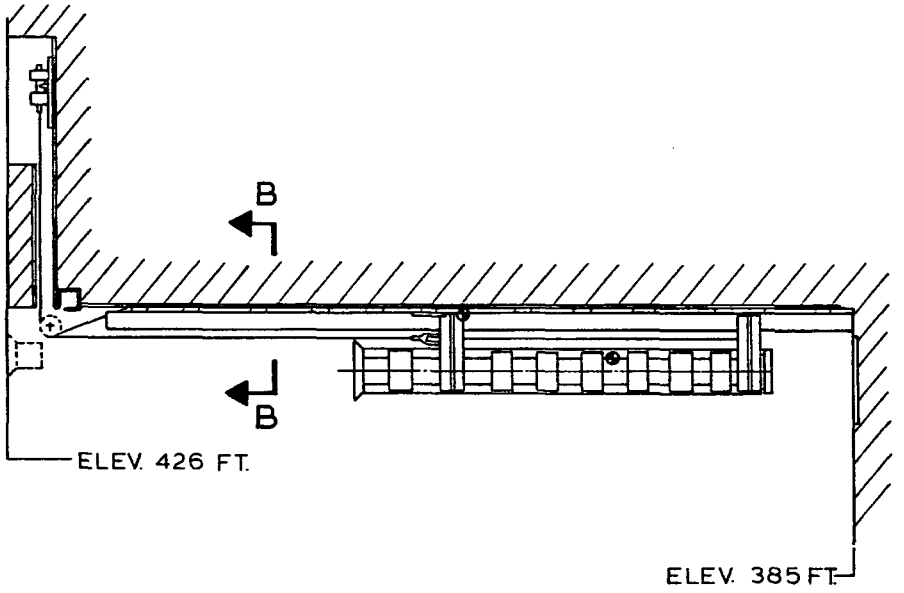

SECTION C-C

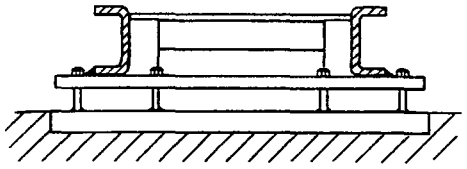

SECTION B-B
VIEW ROTATED 90°

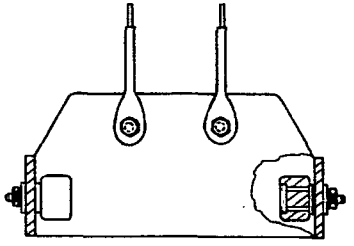

SECTION A-A

BYRON/BRAIDWOOD STATIONS
UPDATED FINAL SAFETY ANALYSIS REPORT

FIGURE 9.1-14

NEW FUEL ELEVATOR

REVISION 7
DECEMBER 1998

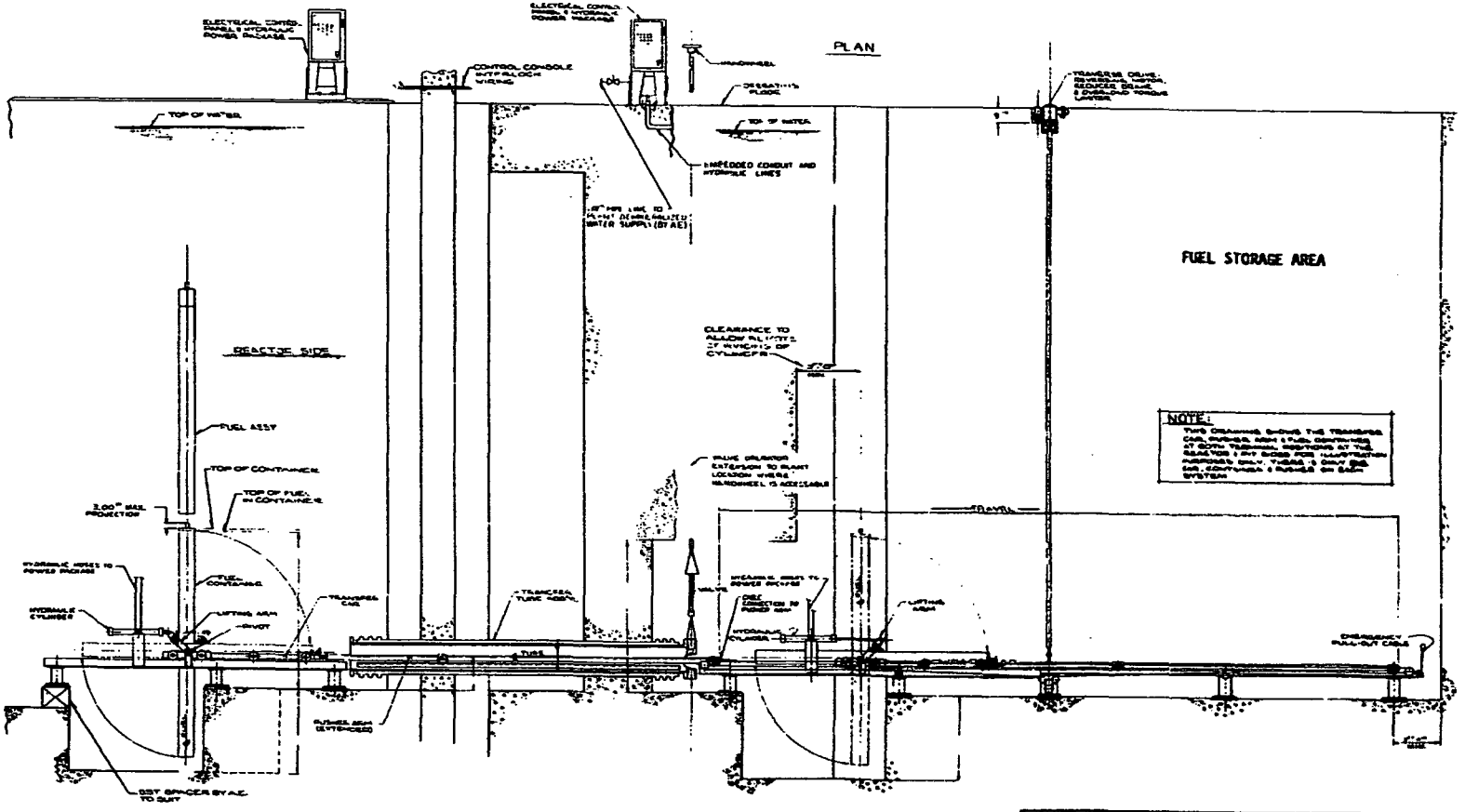

BYRON/BRAIDWOOD STATIONS
UPDATED FINAL SAFETY ANALYSIS REPORT

FIGURE 9.1-15

FUEL TRANSFER SYSTEM

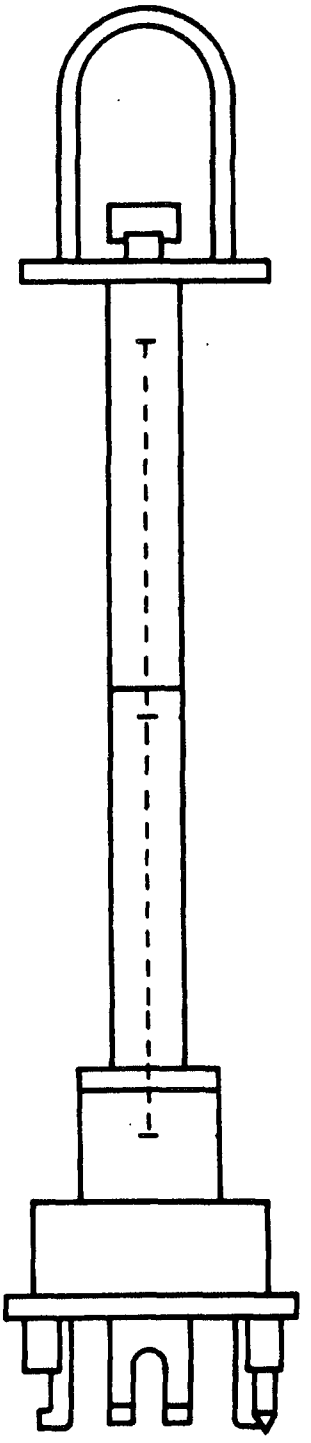

BYRON/BRAIDWOOD STATIONS
UPDATED FINAL SAFETY ANALYSIS REPORT

FIGURE 9.1-16

SPENT FUEL HANDLING TOOL

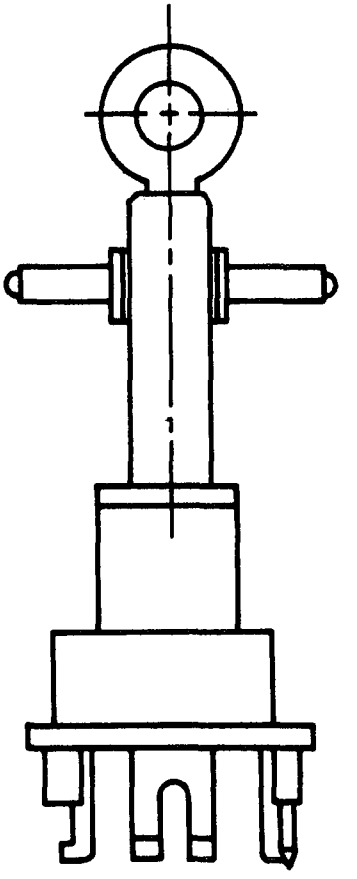

BYRON/BRAIDWOOD STATIONS
UPDATED FINAL SAFETY ANALYSIS REPORT

FIGURE 9.1-17

NEW FUEL HANDLING TOOL

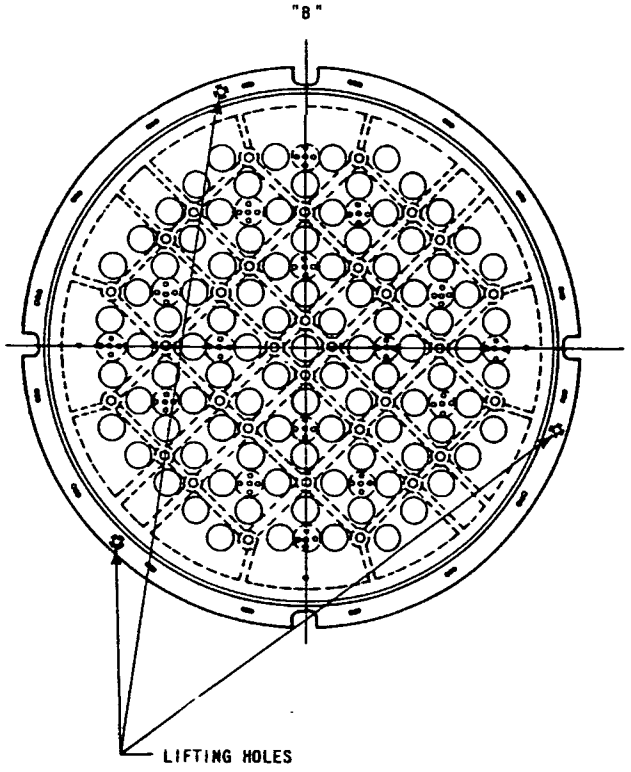

PLAN VIEW OF UPPER CORE SUPPORT STRUCTURE

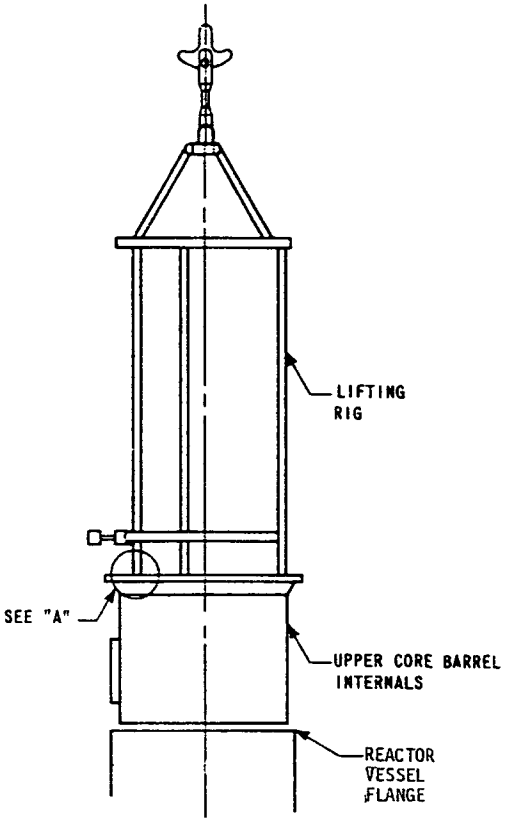

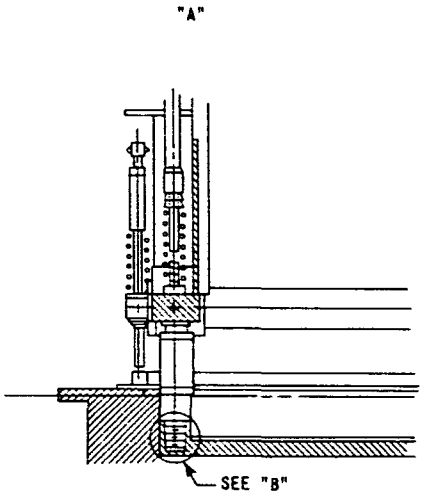

BYRON/BRAIDWOOD STATIONS
UPDATED FINAL SAFETY ANALYSIS REPORT

FIGURE 9.1-18

LIFTING RIG

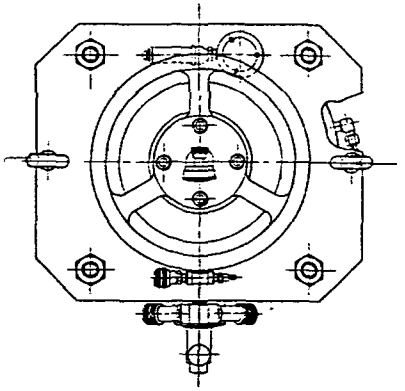

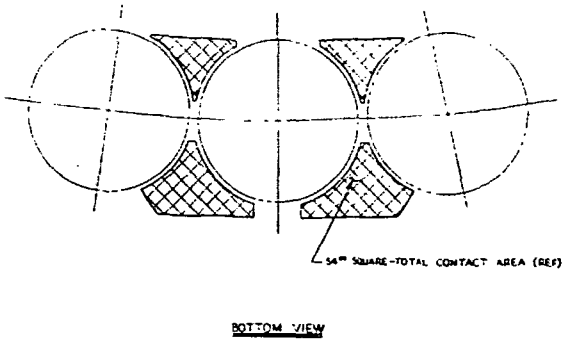

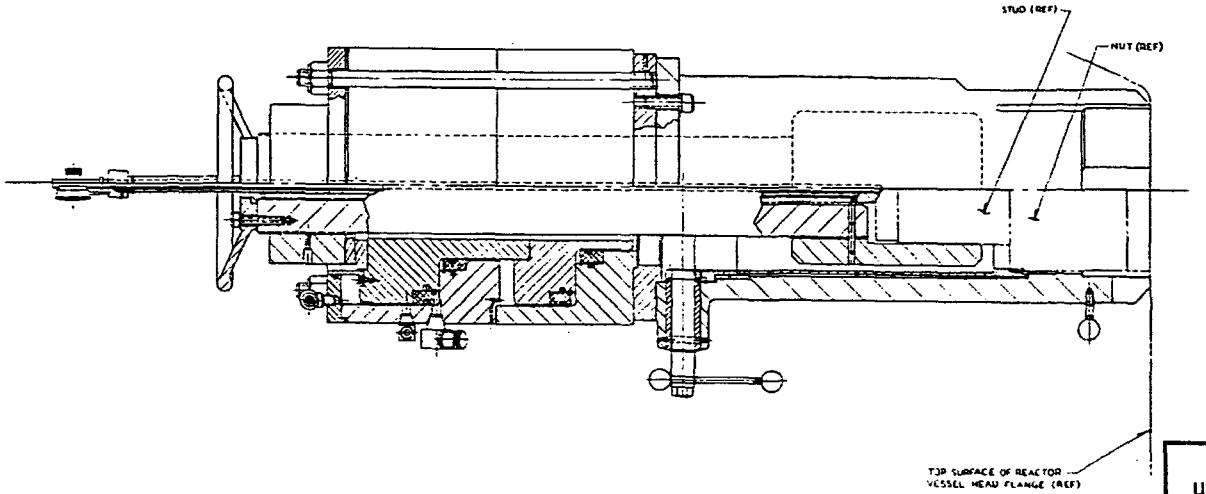

BYRON/BRAIDWOOD STATIONS
UPDATED FINAL SAFETY ANALYSIS REPORT

FIGURE 9.1-19

STUD TENSIONER

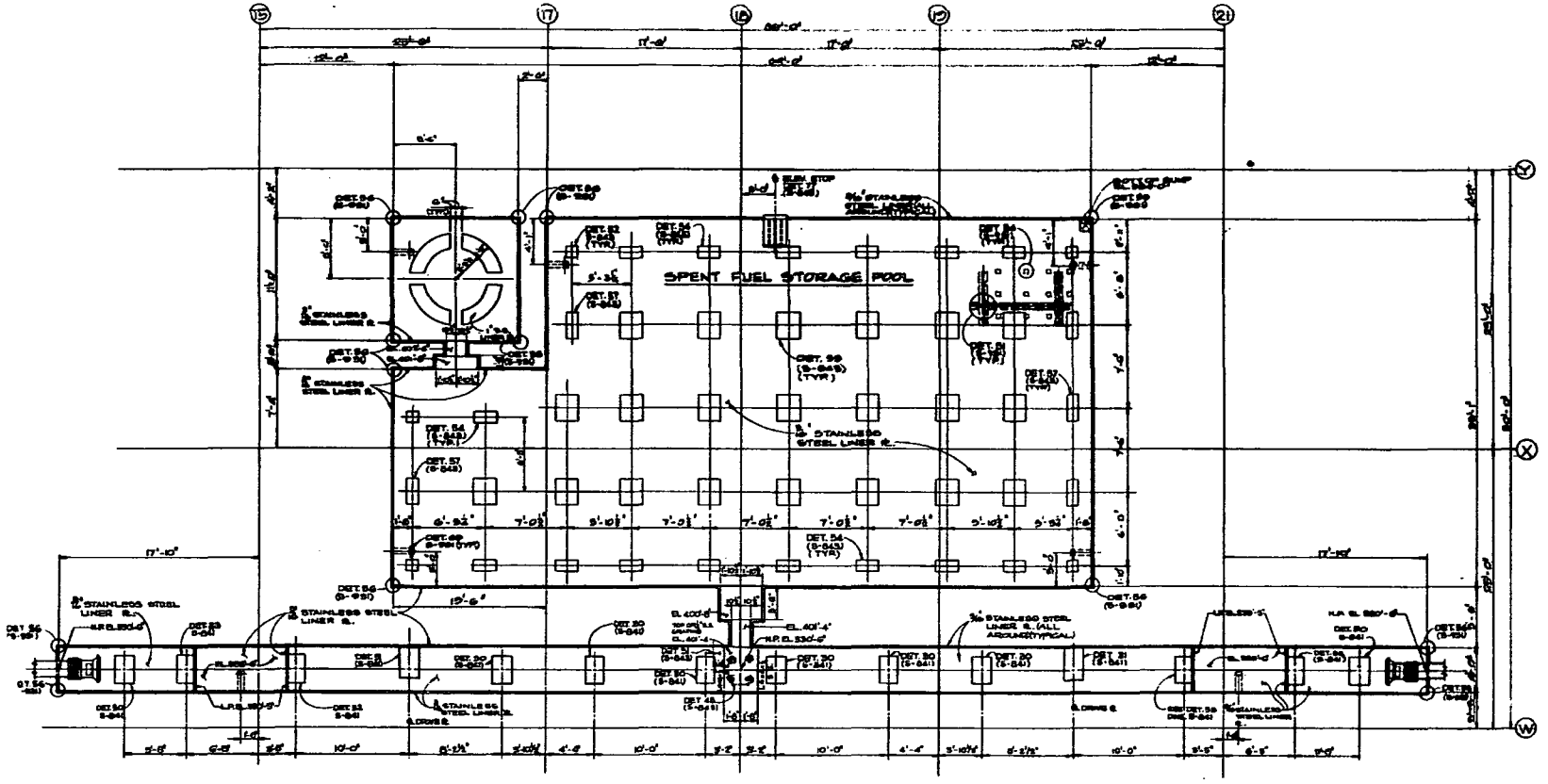

SPENT FUEL STORAGE POOL LINER PLAN
ELEVATION 385'-0' UNLESS NOTED

BYRON/BRAIDWOOD STATION
UPDATED FINAL SAFETY ANALYSIS REPORT

FIGURE 9.1-20

SPENT FUEL STORAGE LINER PLAN

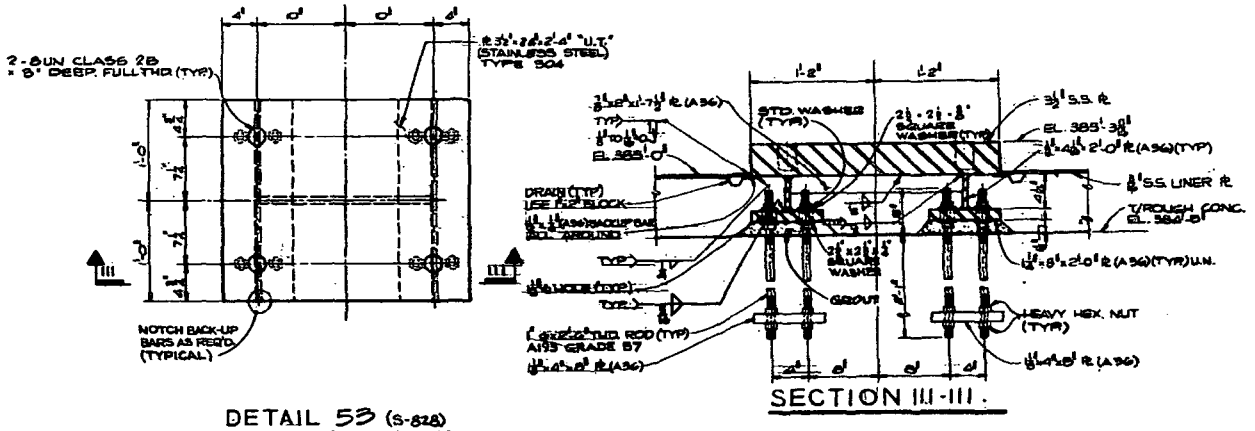

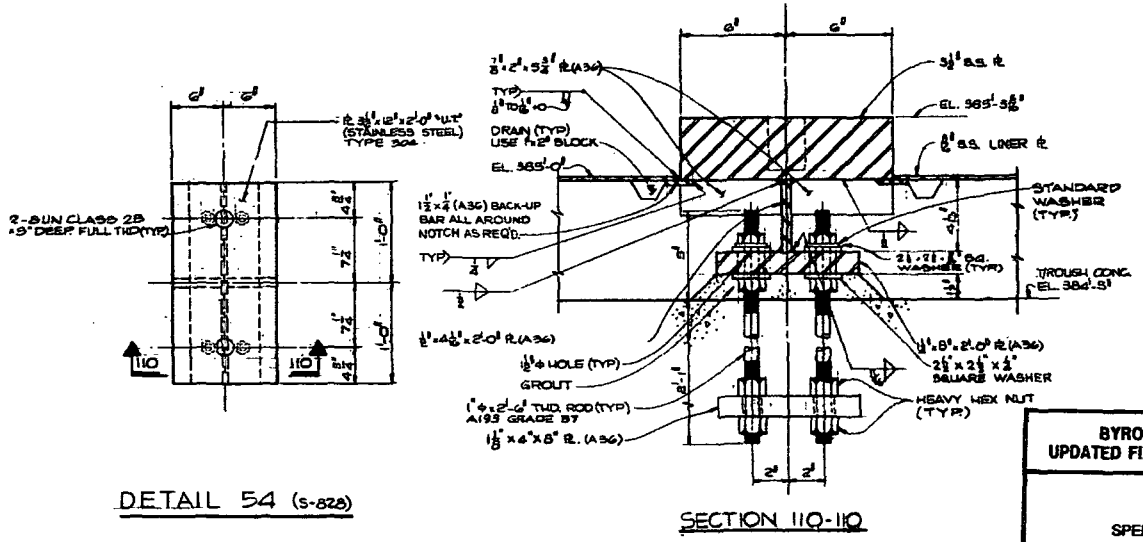

BYRON/BRAIDWOOD STATIONS
UPDATED FINAL SAFETY ANALYSIS REPORT

FIGURE 9.1-21

SPENT FUEL STORAGE LINER DETAIL

Figure 9.1-22 has been deleted intentionally.

Figures 9.2-1 through 9.2-6 have been deleted intentionally.

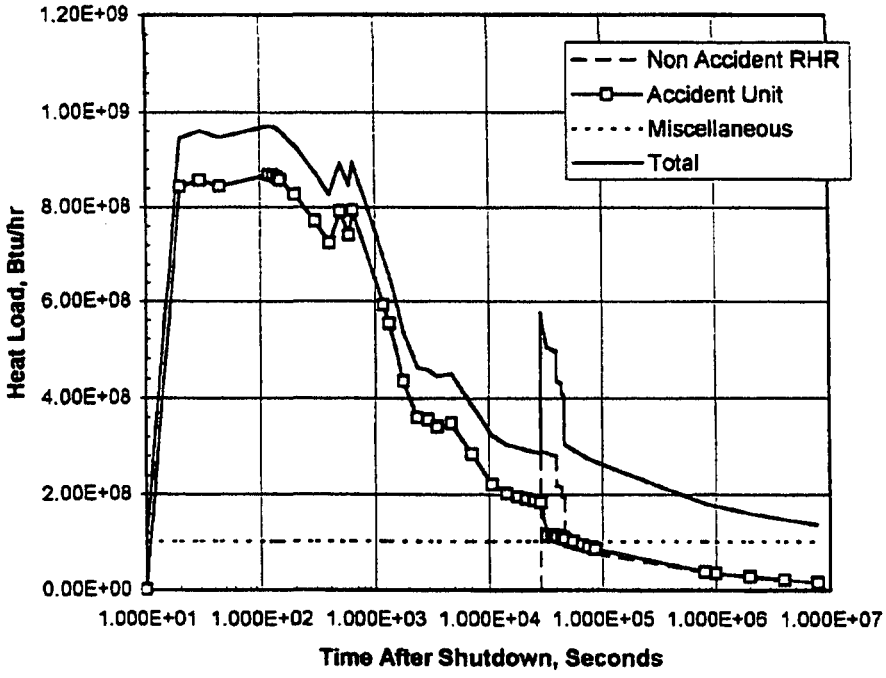

BYRON/BRAIDWOOD STATIONS
UPDATED FINAL SAFETY ANALYSIS REPORT

FIGURE 9.2-7
HEAT REJECTION TO THE ULTIMATE HEAT SINK FOR TWO 3411 MWT (GUARANTEED CORE THERMAL POWER) PWR REACTORS BROUGHT TO COLD SHUTDOWN

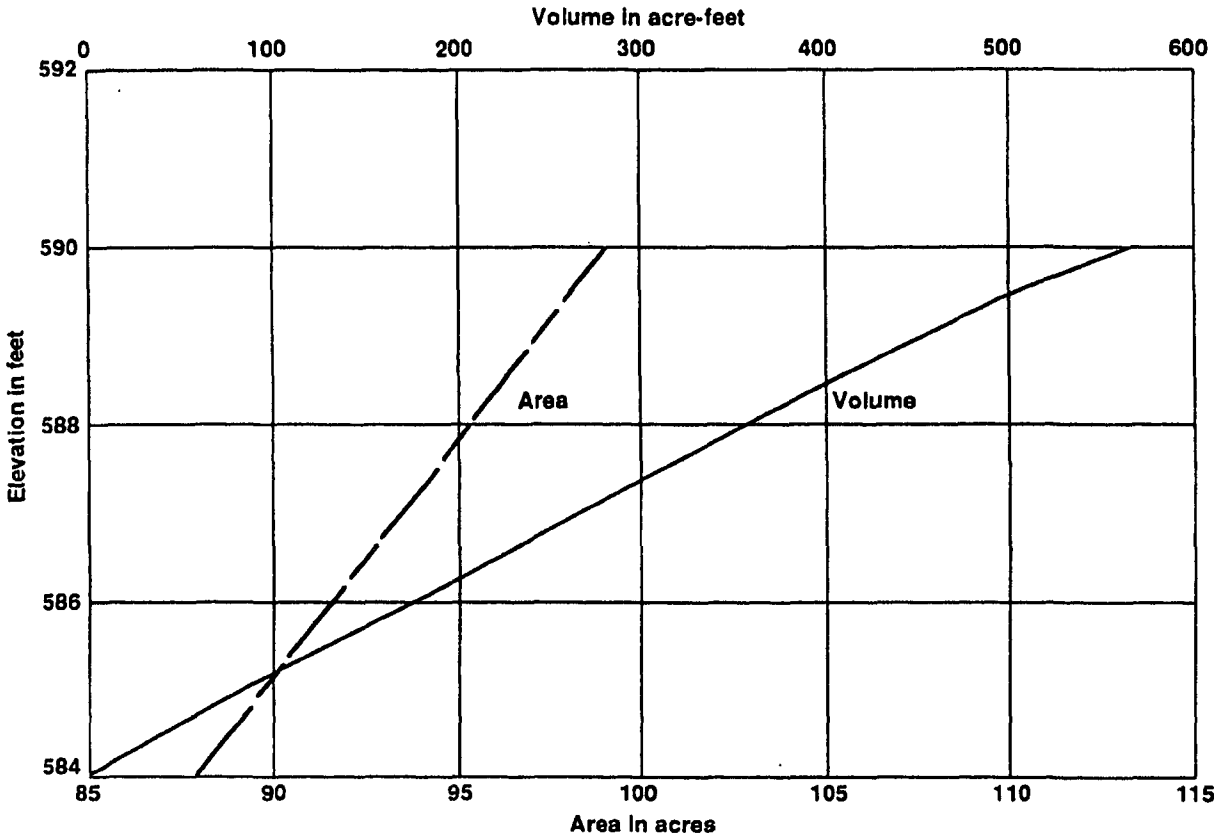

BRAIDWOOD STATION
UPDATED FINAL SAFETY ANALYSIS REPORT

FIGURE 9.2-8

ULTIMATE HEAT SINK AREA,
VOLUME (CAPACITY) CURVES

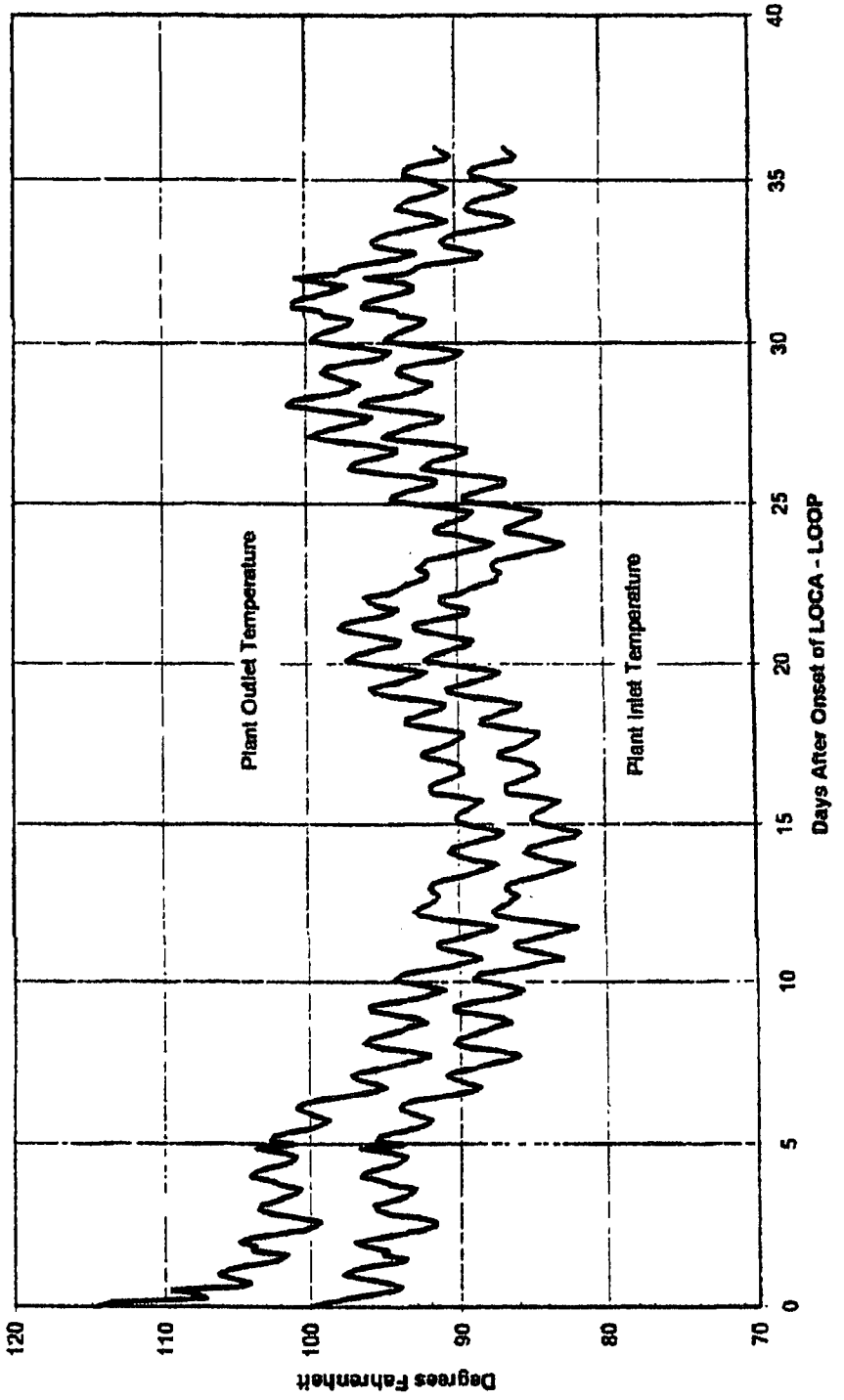

Figure 9.2-9: **Heat Sink Temperatures For Maximum Temperature (Weather) Conditions 3 Pump Operation**

BRAIDWOOD STATION
UPDATED FINAL SAFETY ANALYSIS REPORT

FIGURE 9.2-9

HEAT SINK TEMPERATURES FOR
MAXIMUM TEMPERATURE CONDITIONS

Figure 9.2-10: **Drawdown For Maximum Temperature (Weather) Conditions**
3 Pump Operation

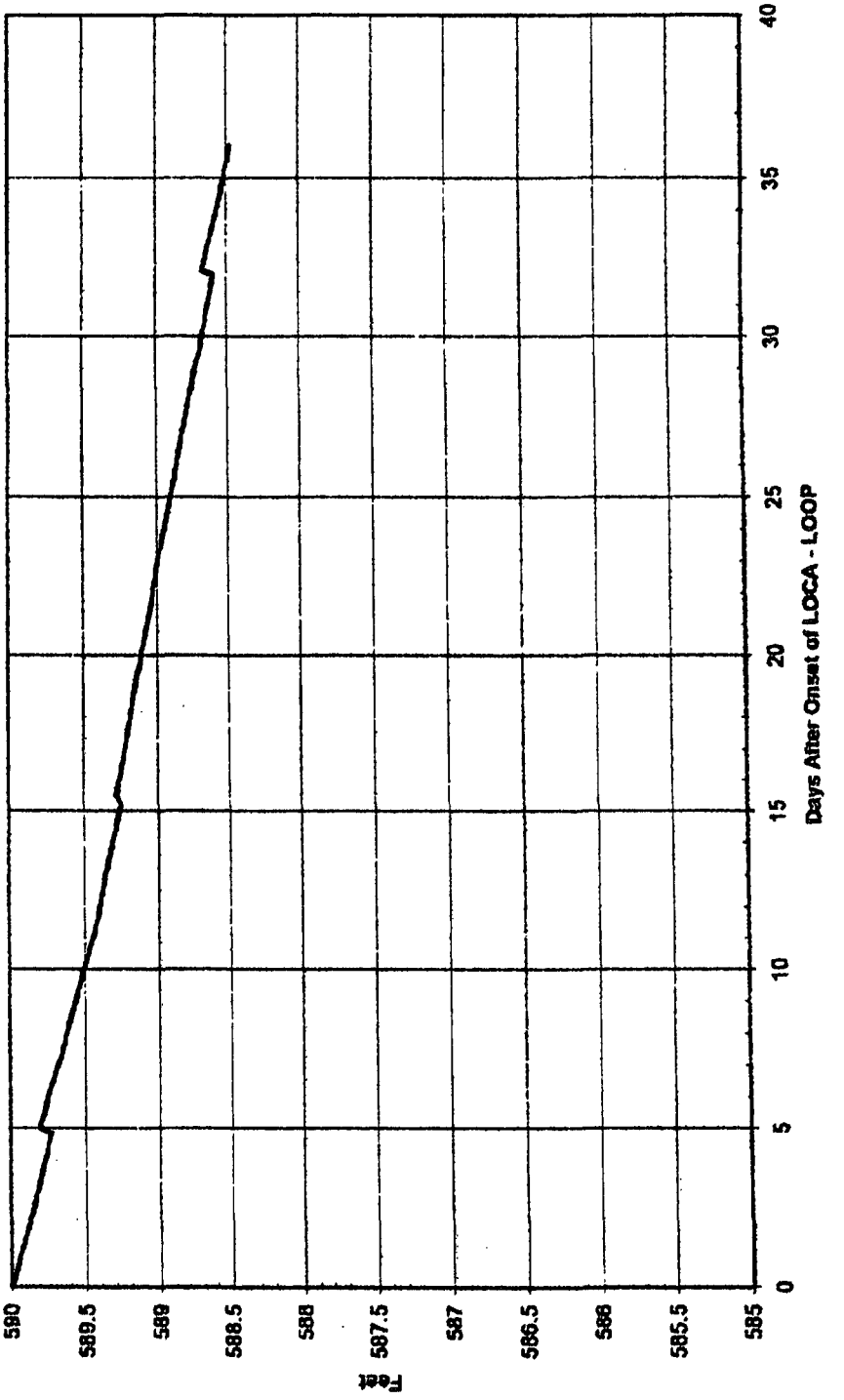

Calculation No. ATD-0109, Rev. 2
Appendix A, Page A11

BRAIDWOOD STATION
UPDATED FINAL SAFETY ANALYSIS REPORT

FIGURE 9.2-10

DRAWDOWN FOR MAXIMUM
TEMPERATURE CONDITIONS

Calculation No. ATD-0109, Rev. 2
Appendix A, Page A10

Figure 9.2-11: **Natural Temperature of Heat Sink - Maximum Temperature (Weather) Conditions**
3 Pump Operation

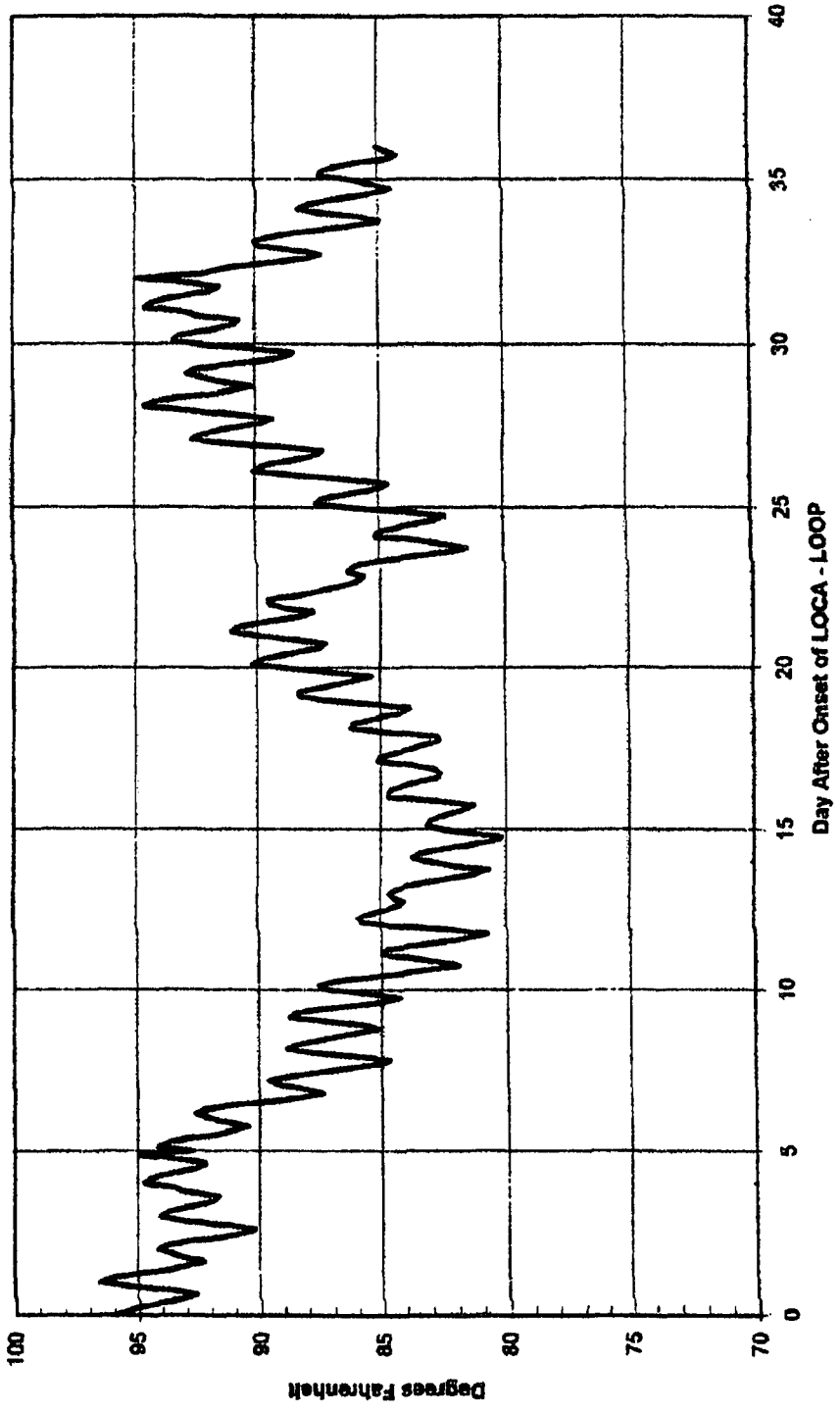

BRAIDWOOD STATION
UPDATED FINAL SAFETY ANALYSIS REPORT

FIGURE 9.2-11

NATURAL TEMPERATURES FOR
MAXIMUM TEMPERATURE CONDITIONS

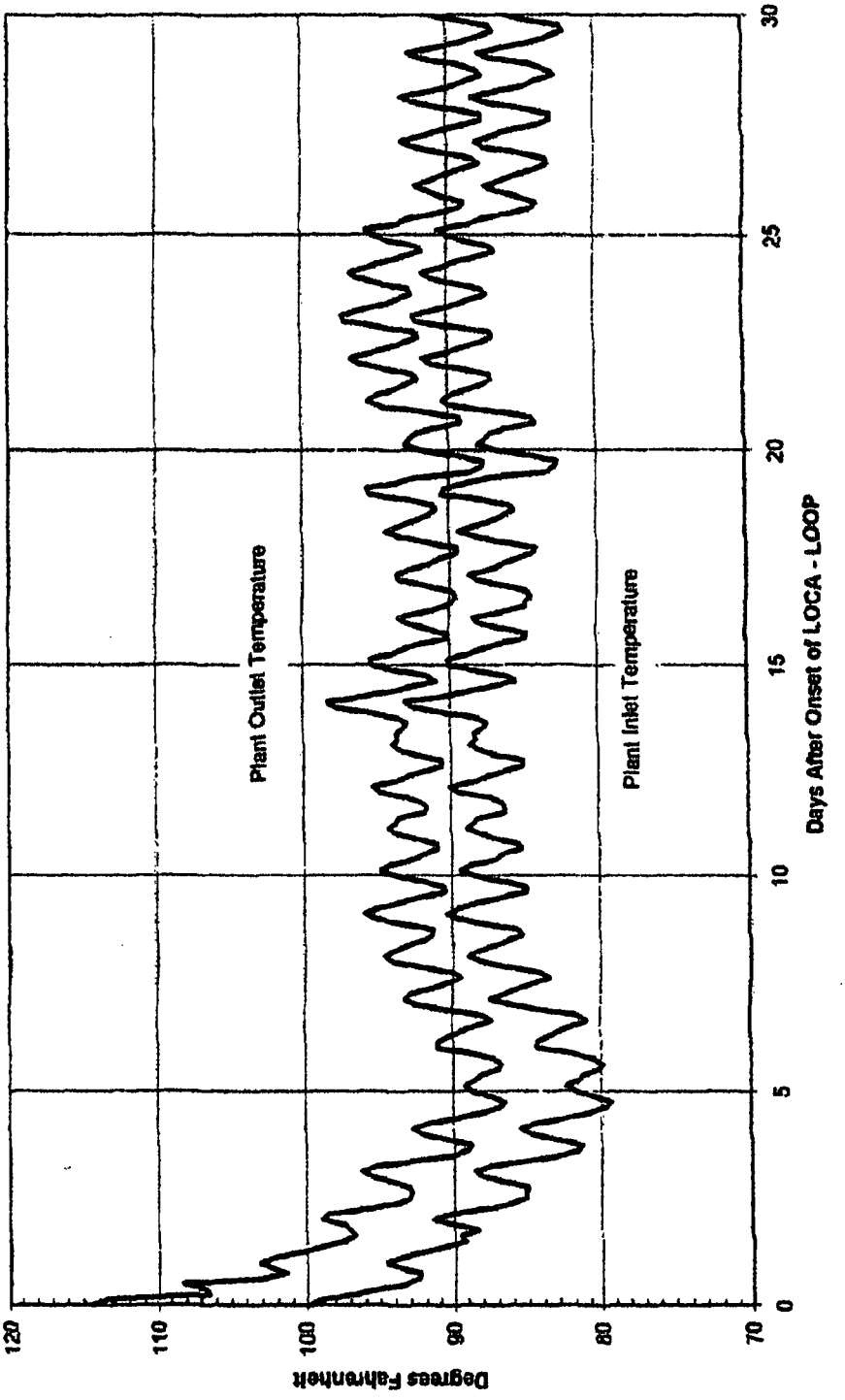

Figure 9.2-12: **Heat Sink Temperatures For Maximum Evaporation (Weather) Conditions 3 Pump Operation**

BRAIDWOOD STATION
UPDATED FINAL SAFETY ANALYSIS REPORT

FIGURE 9.2-12

HEAT SINK TEMPERATURES FOR
MAXIMUM EVAPORATION CONDITIONS

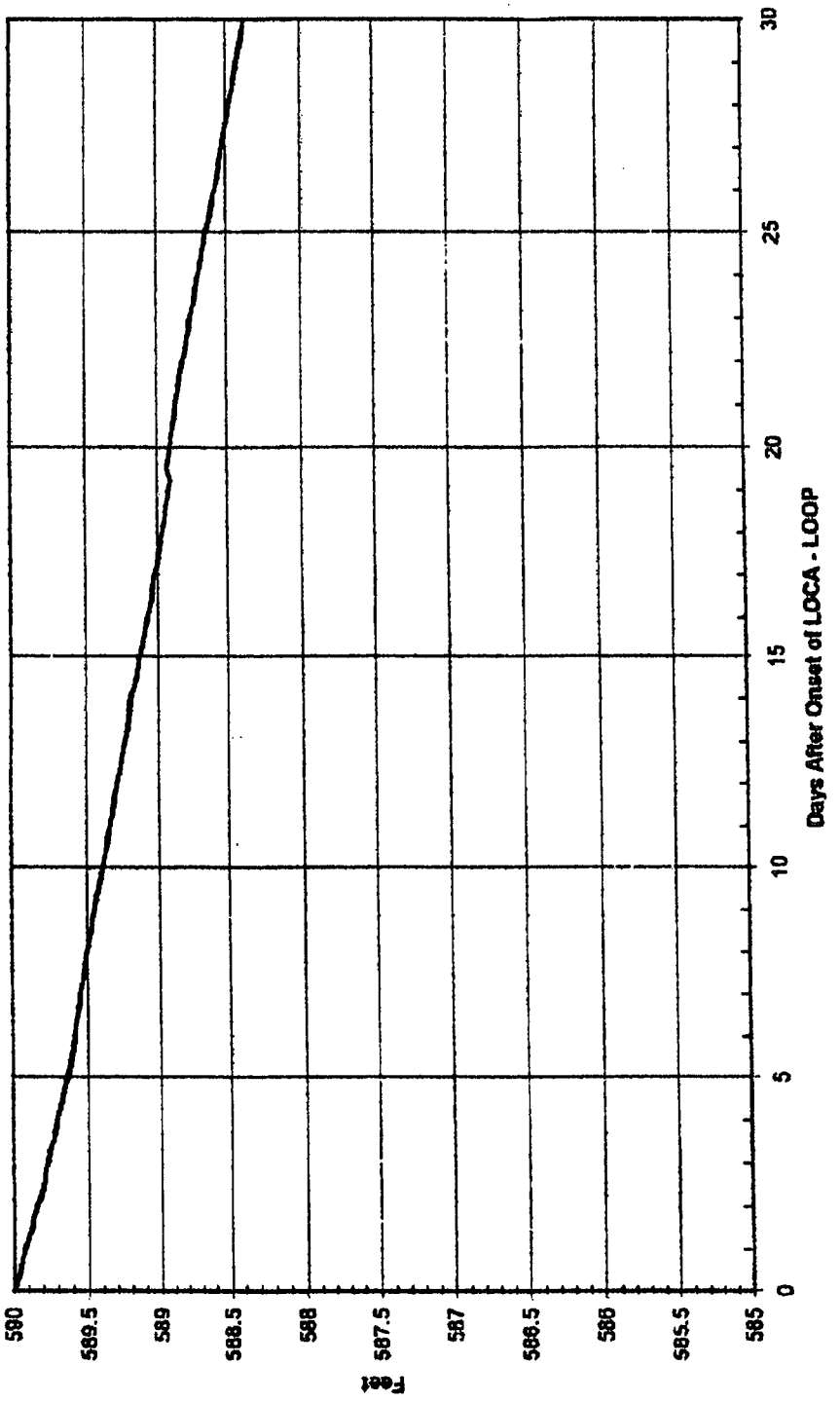

Figure 9.2-13: **Drawdown For Maximum Evaporation (Weather) Conditions**
3 Pump Operation

BRAIDWOOD STATION
UPDATED FINAL SAFETY ANALYSIS REPORT

FIGURE 9.2-13

DRAWDOWN FOR MAXIMUM
EVAPORATION CONDITIONS

Figure 9.2-14: **Natural Temperature of Heat Sink - Maximum Evaporation (Weather) Conditions**
3 Pump Operation

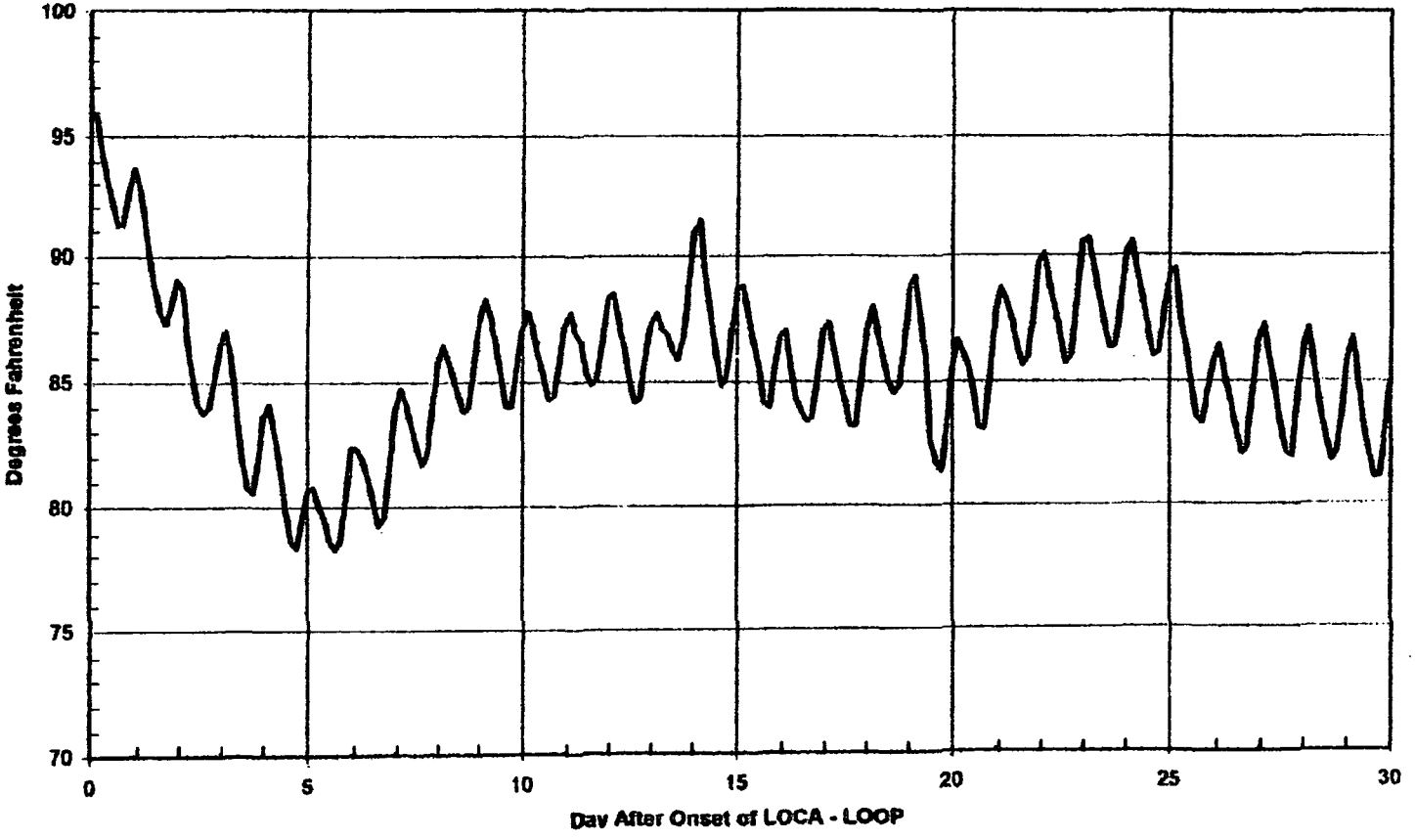

BRAIDWOOD STATION
UPDATED FINAL SAFETY ANALYSIS REPORT

FIGURE 9.2-14

NATURAL TEMPERATURES FOR
MAXIMUM EVAPORATION CONDITIONS

Figures 9.2-15 through 9.2-27a have been deleted intentionally.

REVISION 7
DECEMBER 1998

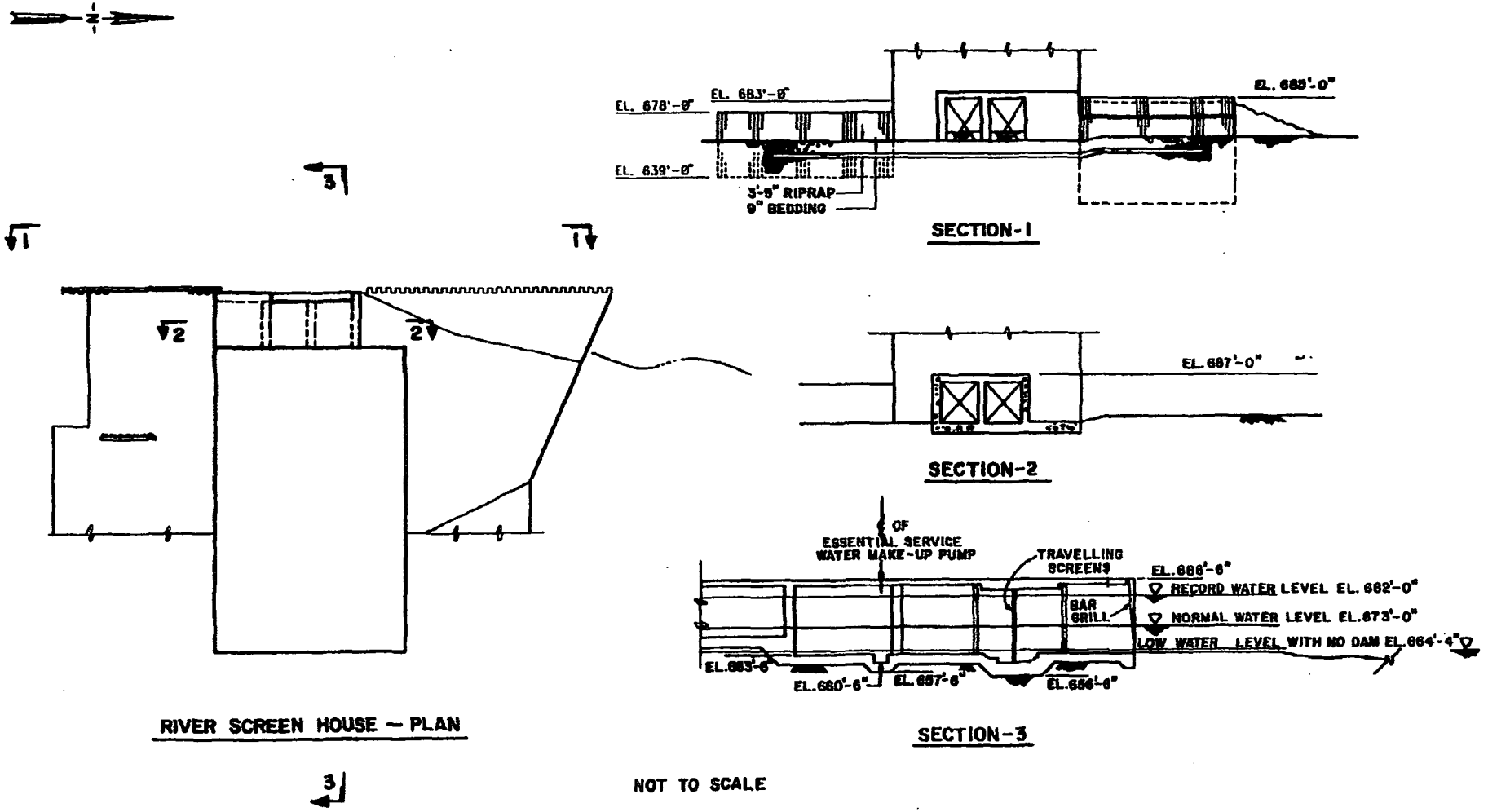

BYRON STATION
UPDATED FINAL SAFETY ANALYSIS REPORT

FIGURE 9.2-28

BYRON RIVER SCREEN HOUSE

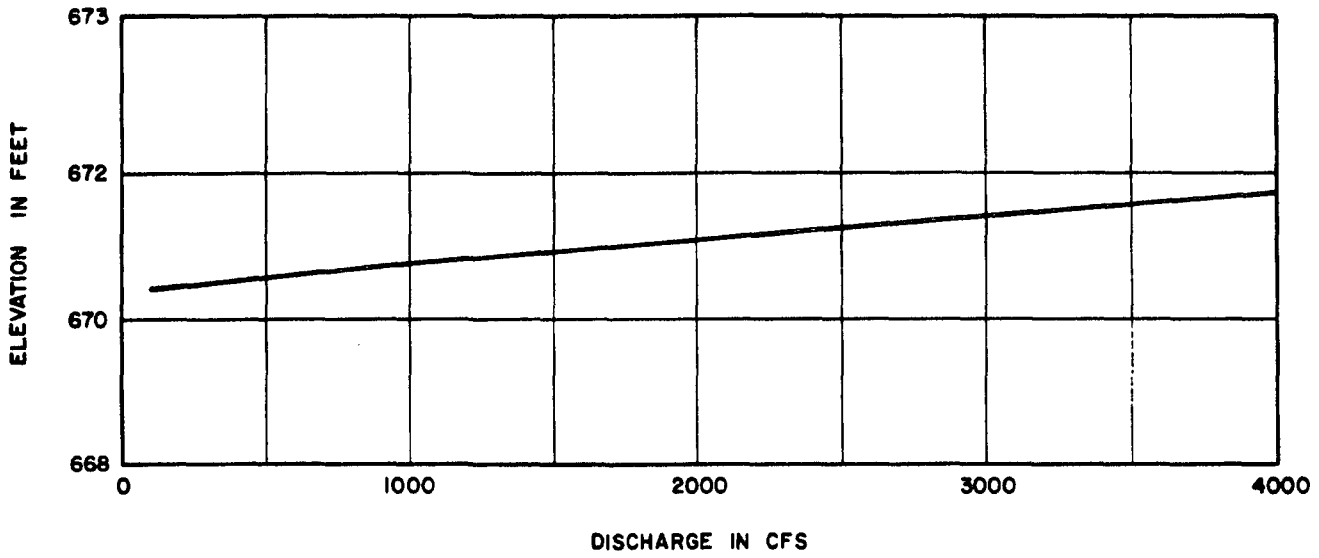

BYRON STATION
UPDATED FINAL SAFETY ANALYSIS REPORT

FIGURE 9.2-29

BYRON RSH RATING CURVE FOR LOW FLOWS

Figures 9.3-1 through 9.3-9 have been deleted intentionally.

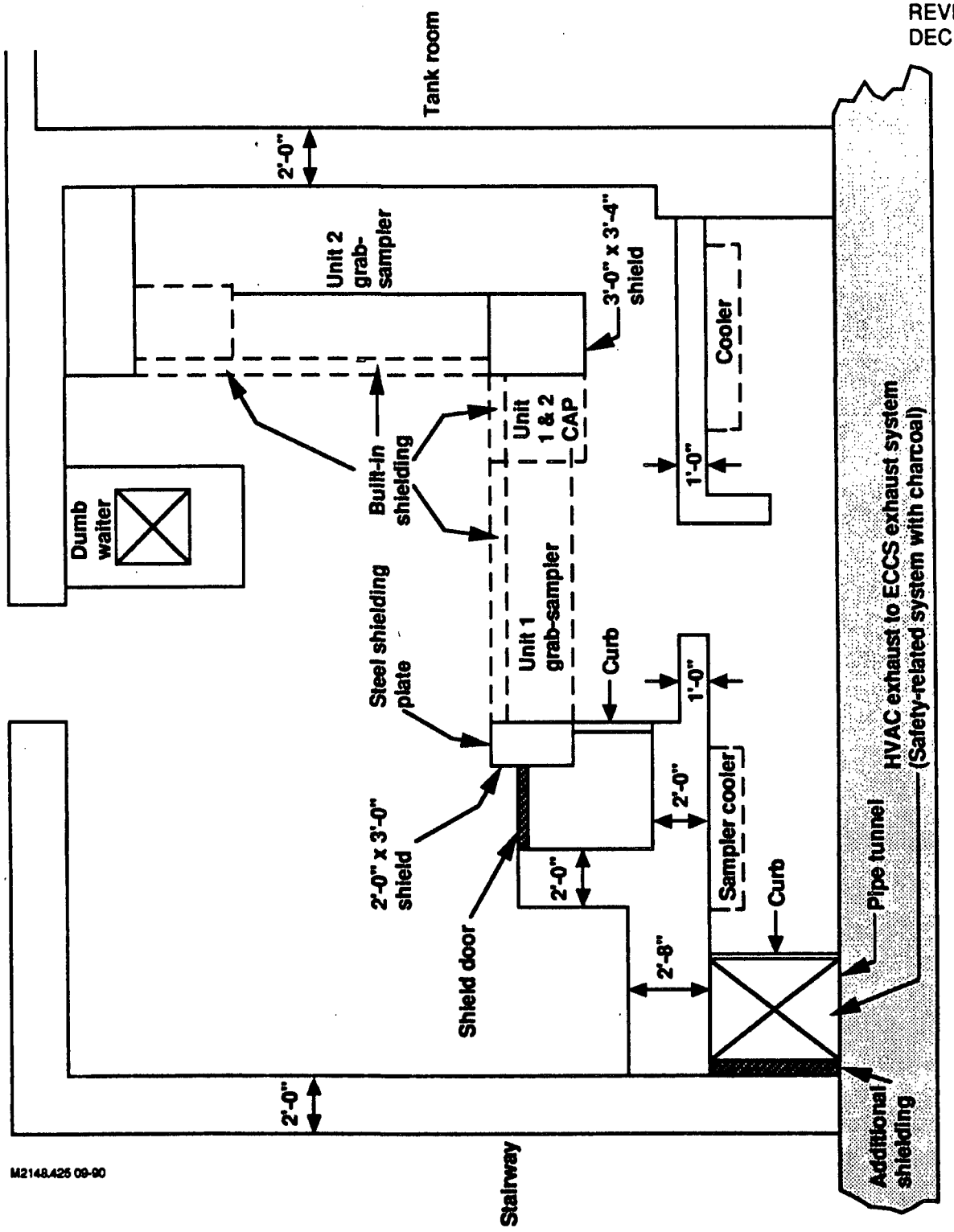

M2148.425 09-90

BYRON/BRAIDWOOD STATIONS
UPDATED FINAL SAFETY ANALYSIS REPORT

FIGURE 9.3-10

SAMPLING ROOM SHIELDING DESIGN

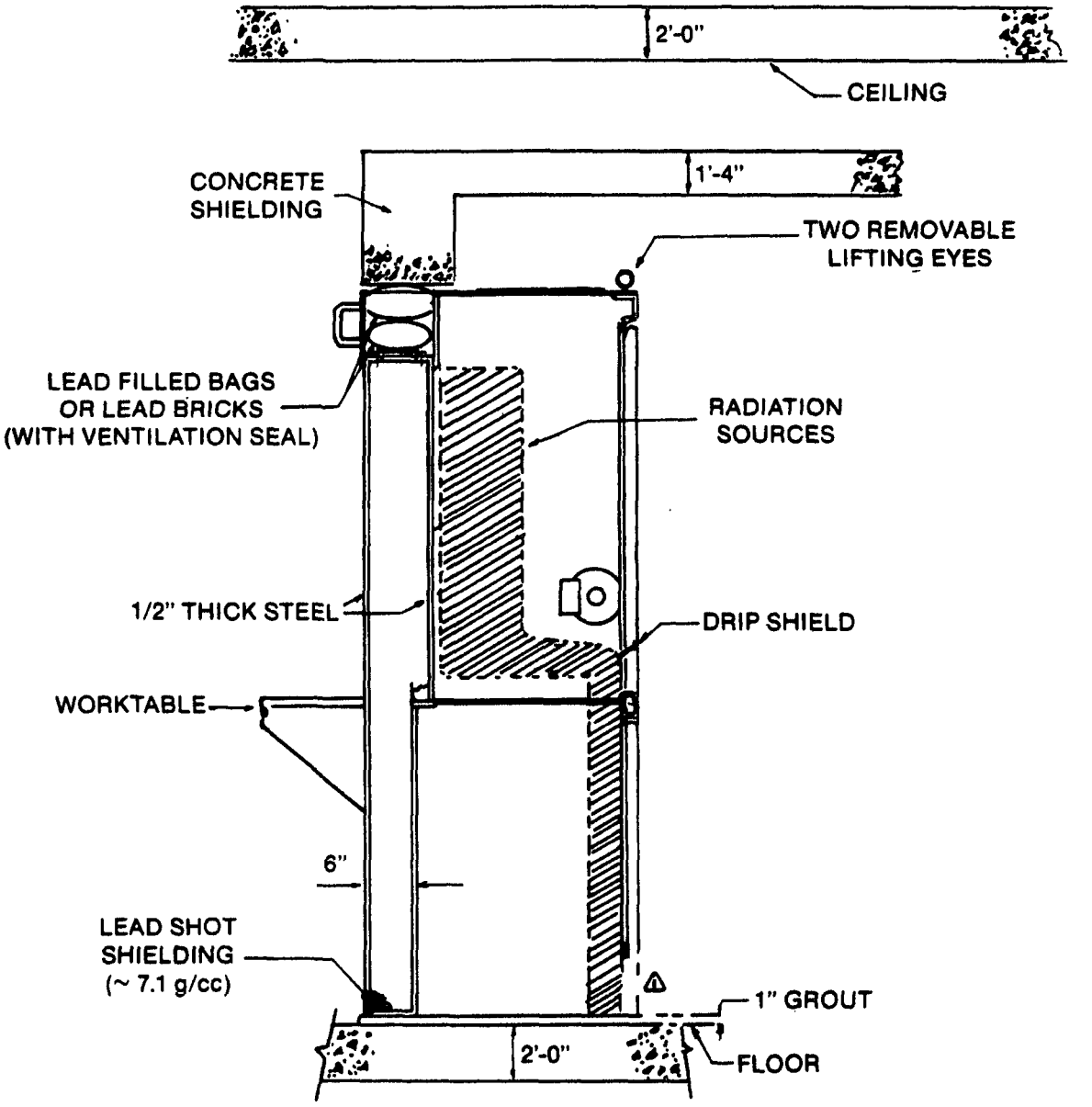

BYRON/BRAIDWOOD STATIONS
UPDATED FINAL SAFETY ANALYSIS REPORT

FIGURE 9.3-11

HIGH-RAD LIQUID SAMPLING PANEL

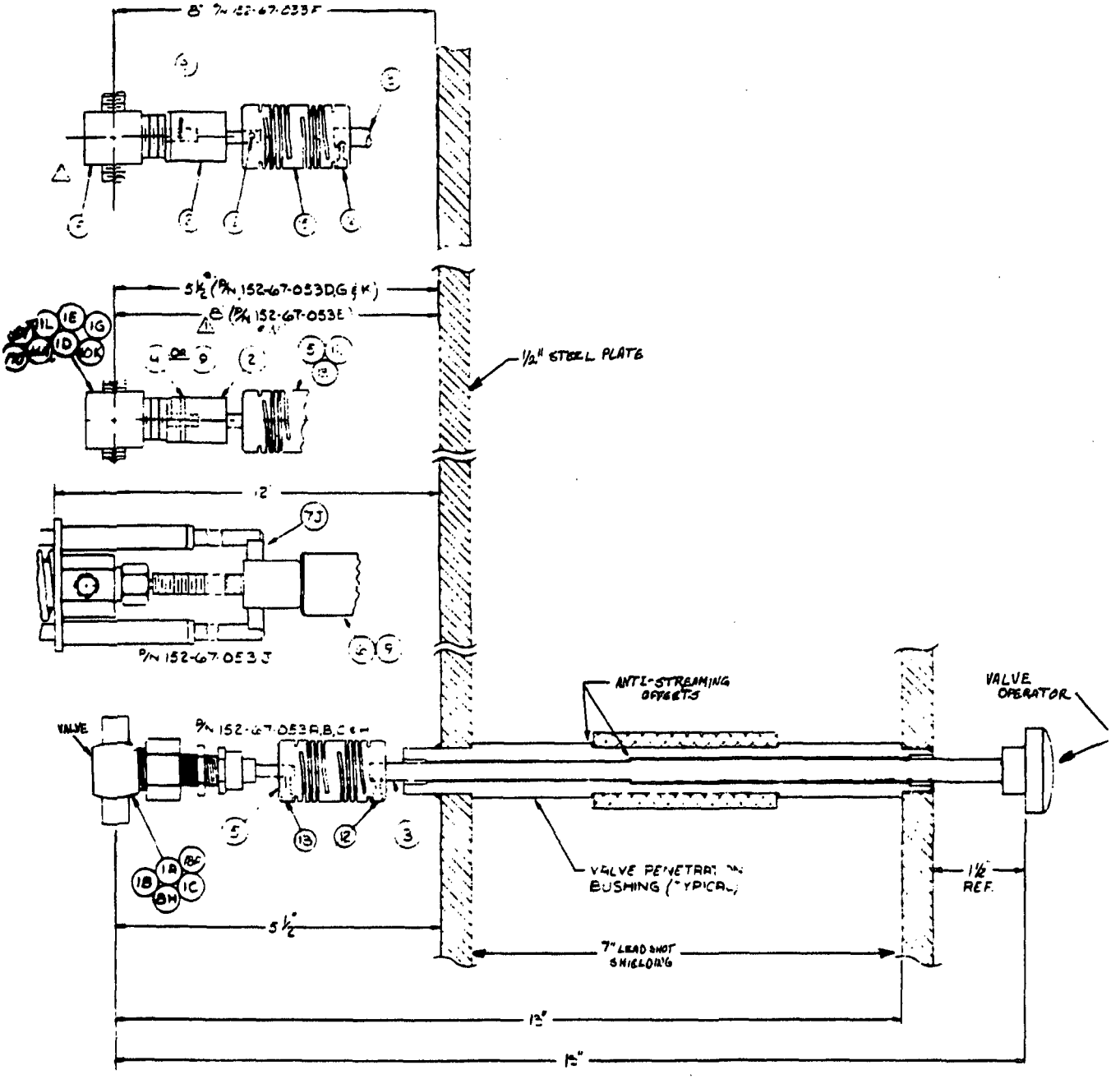

BYRON/BRAIDWOOD STATIONS
UPDATED FINAL SAFETY ANALYSIS REPORT

FIGURE 9.3-12

GRAB SAMPLER AND CAP VALVE OPERATOR DESIGN

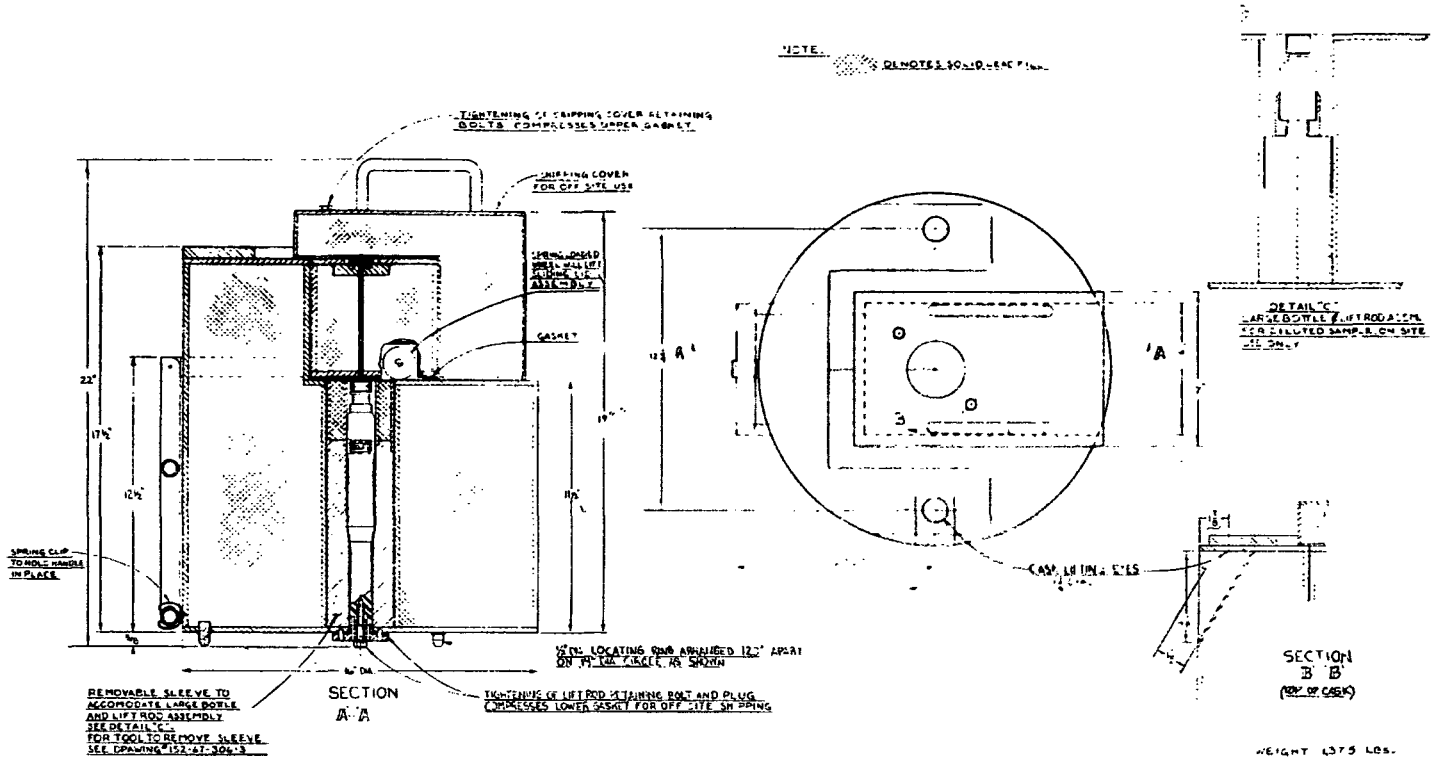

BYRON/BRAIDWOOD STATIONS
UPDATED FINAL SAFETY ANALYSIS REPORT

FIGURE 9.3-13

LIQUID SAMPLING PANEL
CASK OUTLINE

Figures 9.4-1 through 9.4-14 have been deleted intentionally.

Figures 9.5-1 have been deleted intentionally.

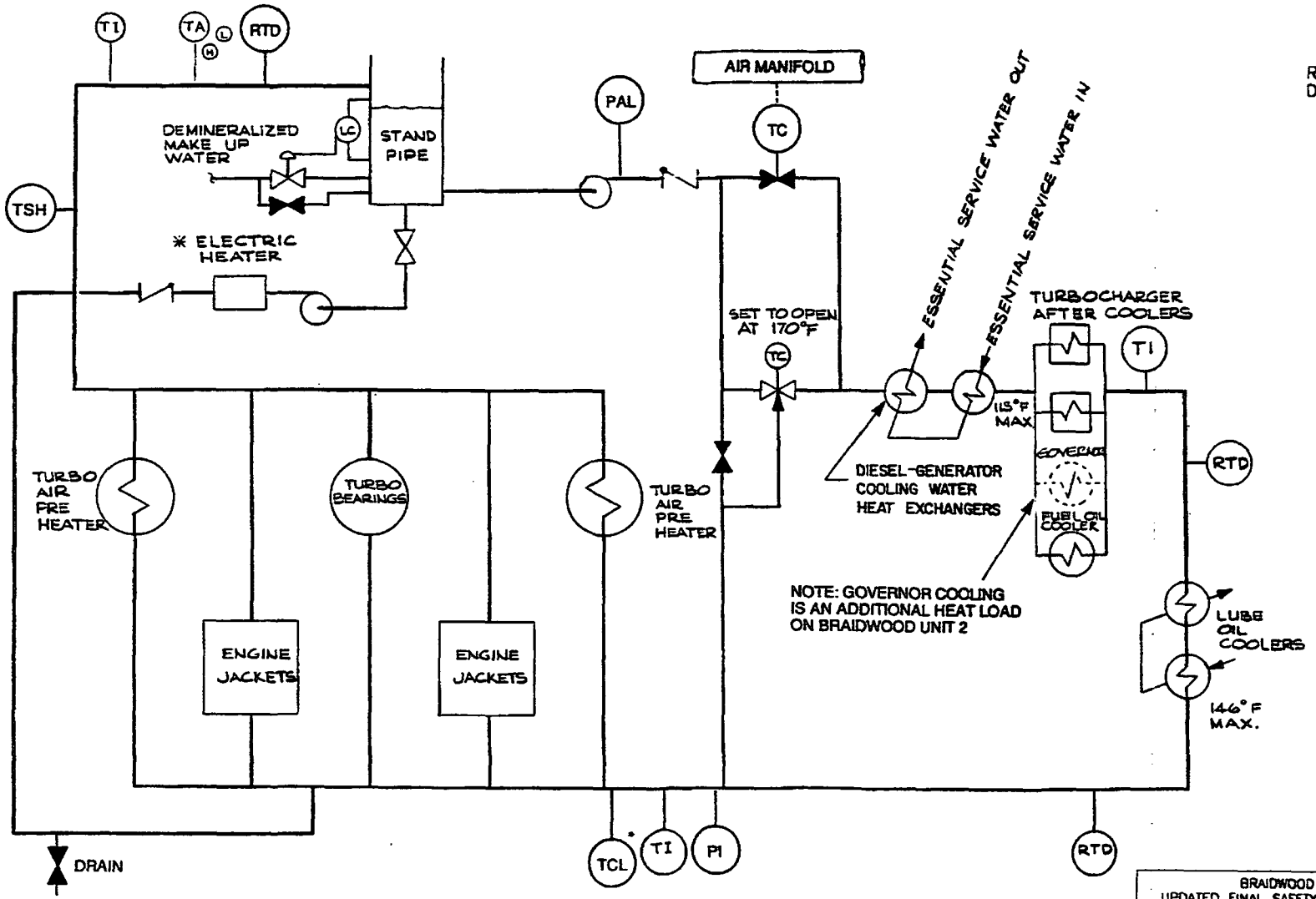

REVISION 6
DECEMBER 1996

* TCL CONTROLS ELECTRIC HEATER TO MAINTAIN 120° F MINIMUM

BRAIDWOOD STATION
UPDATED FINAL SAFETY ANALYSIS REPORT

FIGURE 9.5-2

DIESEL-GENERATOR COOLING WATER SYSTEM

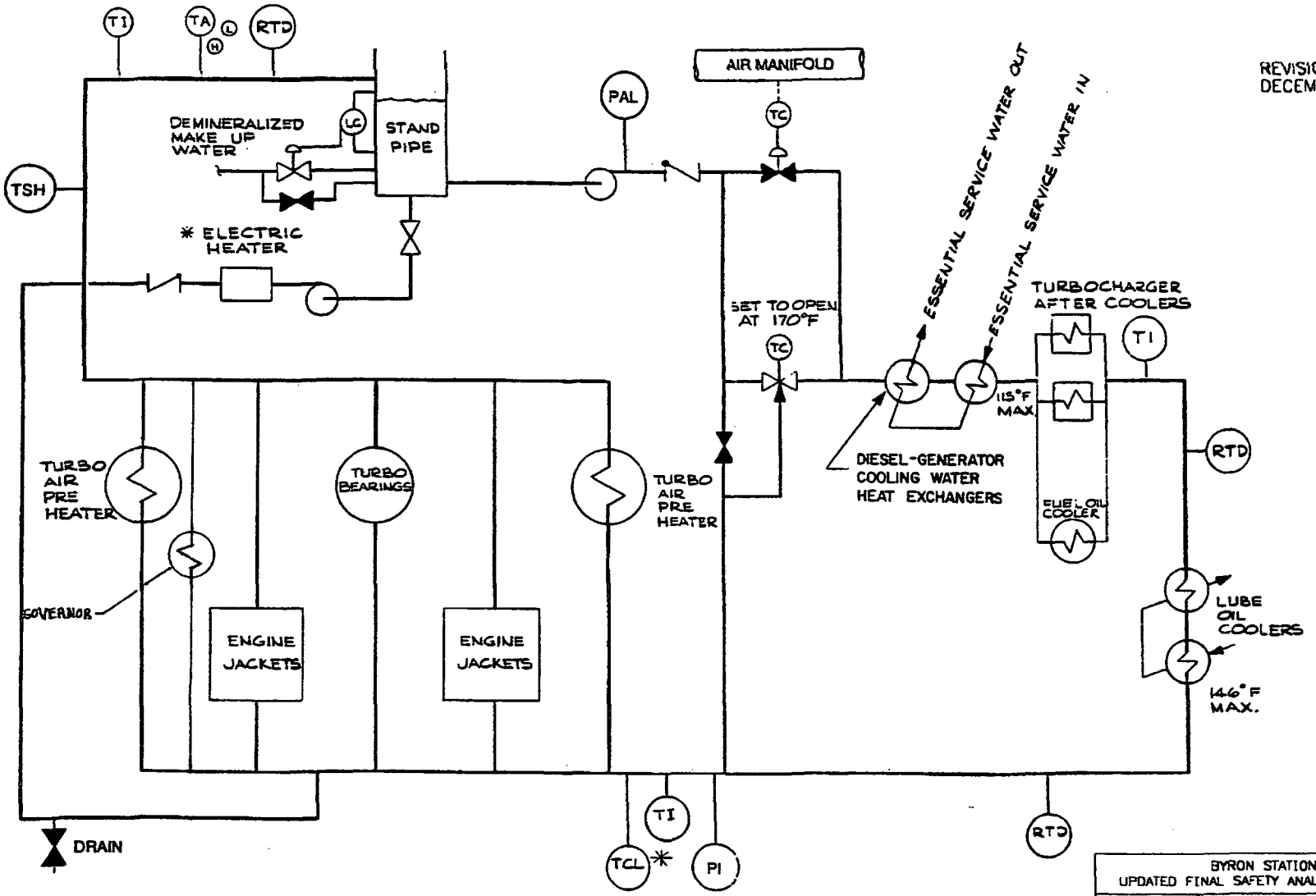

REVISION 6
DECEMBER 1996

* TCL CONTROLS ELECTRIC HEATER TO MAINTAIN 120° F MINIMUM

BYRON STATION
UPDATED FINAL SAFETY ANALYSIS REPORT

FIGURE 9.5-2

DIESEL-GENERATOR COOLING WATER SYSTEM

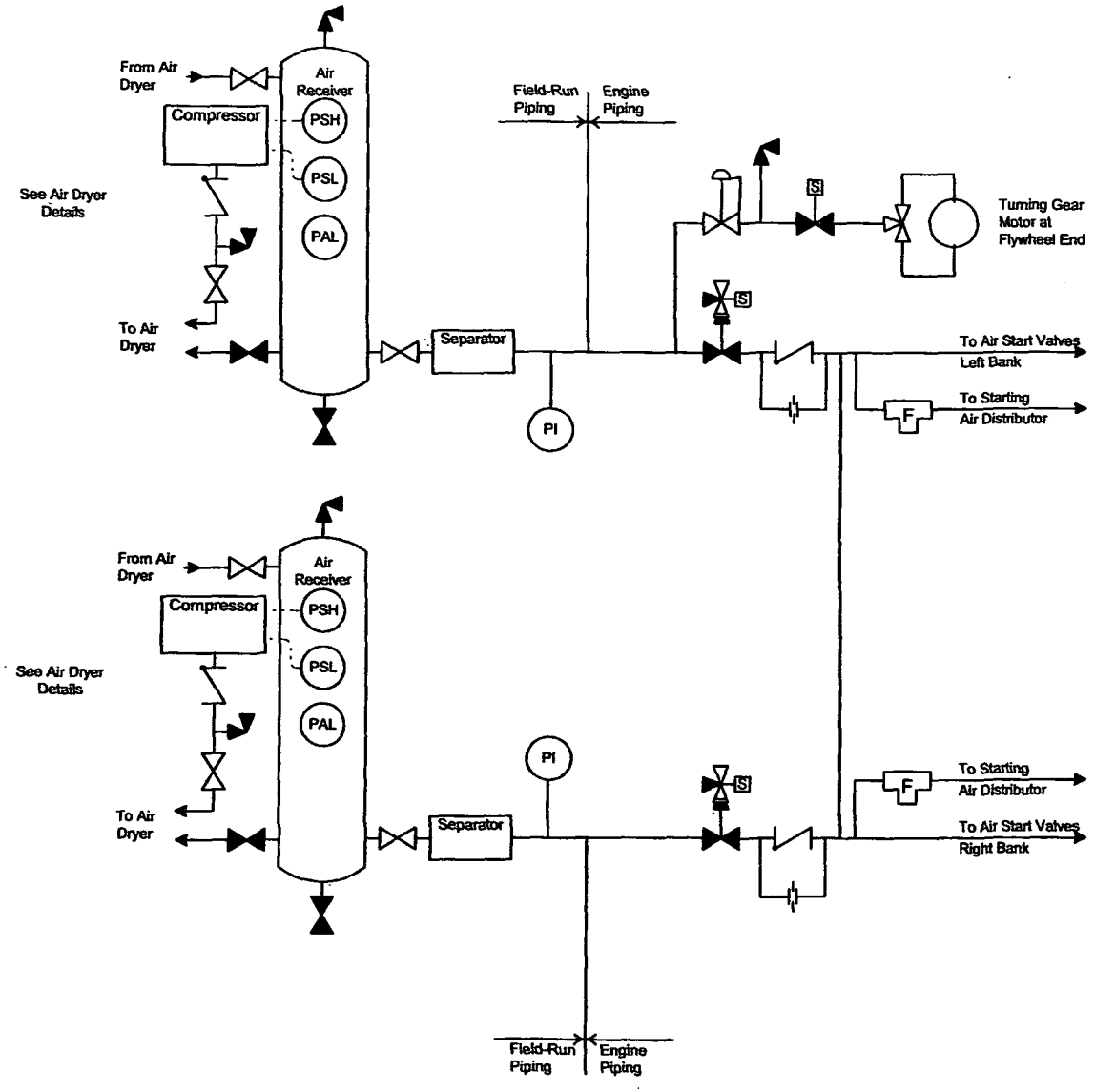

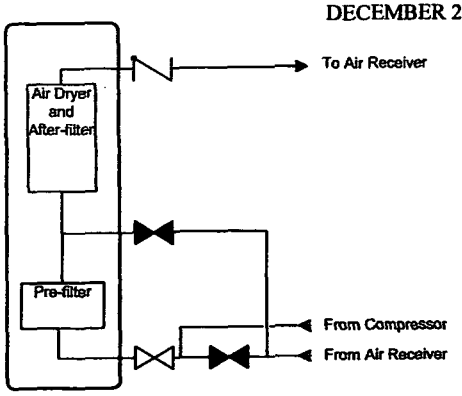

Membrane Type Air Dryer Detail (typical)

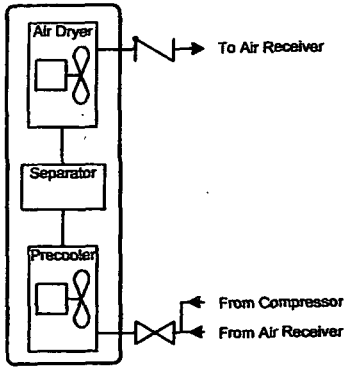

Refrigerated Type Air Dryer Detail (typical)

BRAIDWOOD STATION
UPDATED FINAL SAFETY ANALYSIS REPORT

FIGURE 9.5-3

DIESEL-GENERATOR STARTING SYSTEM

Figure 9.5-3 has been deleted intentionally.

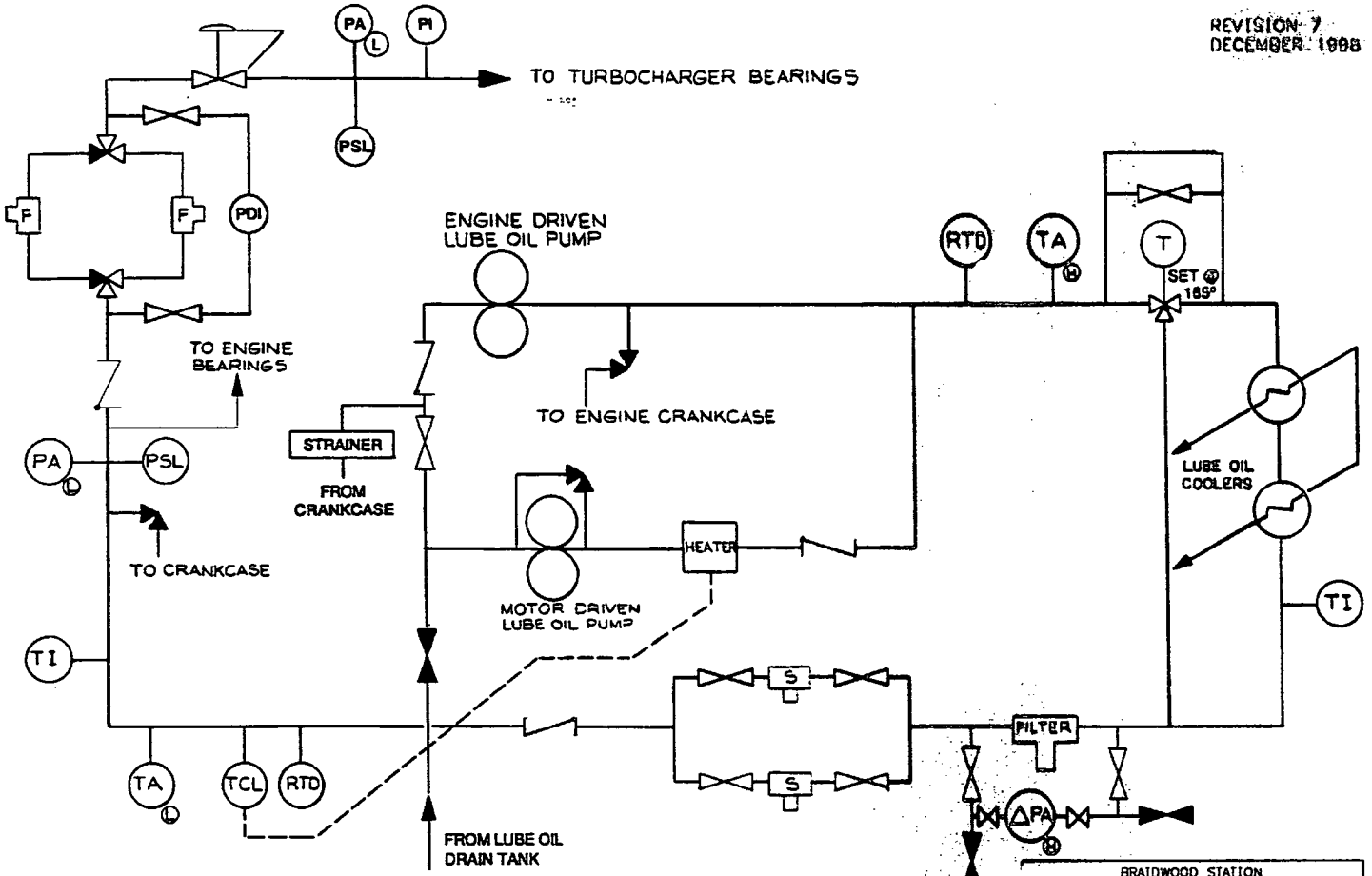

BRAIDWOOD STATION
UPDATED FINAL SAFETY ANALYSIS REPORT

FIGURE 9.5-4

DIESEL-GENERATOR
LUBRICATION SYSTEM

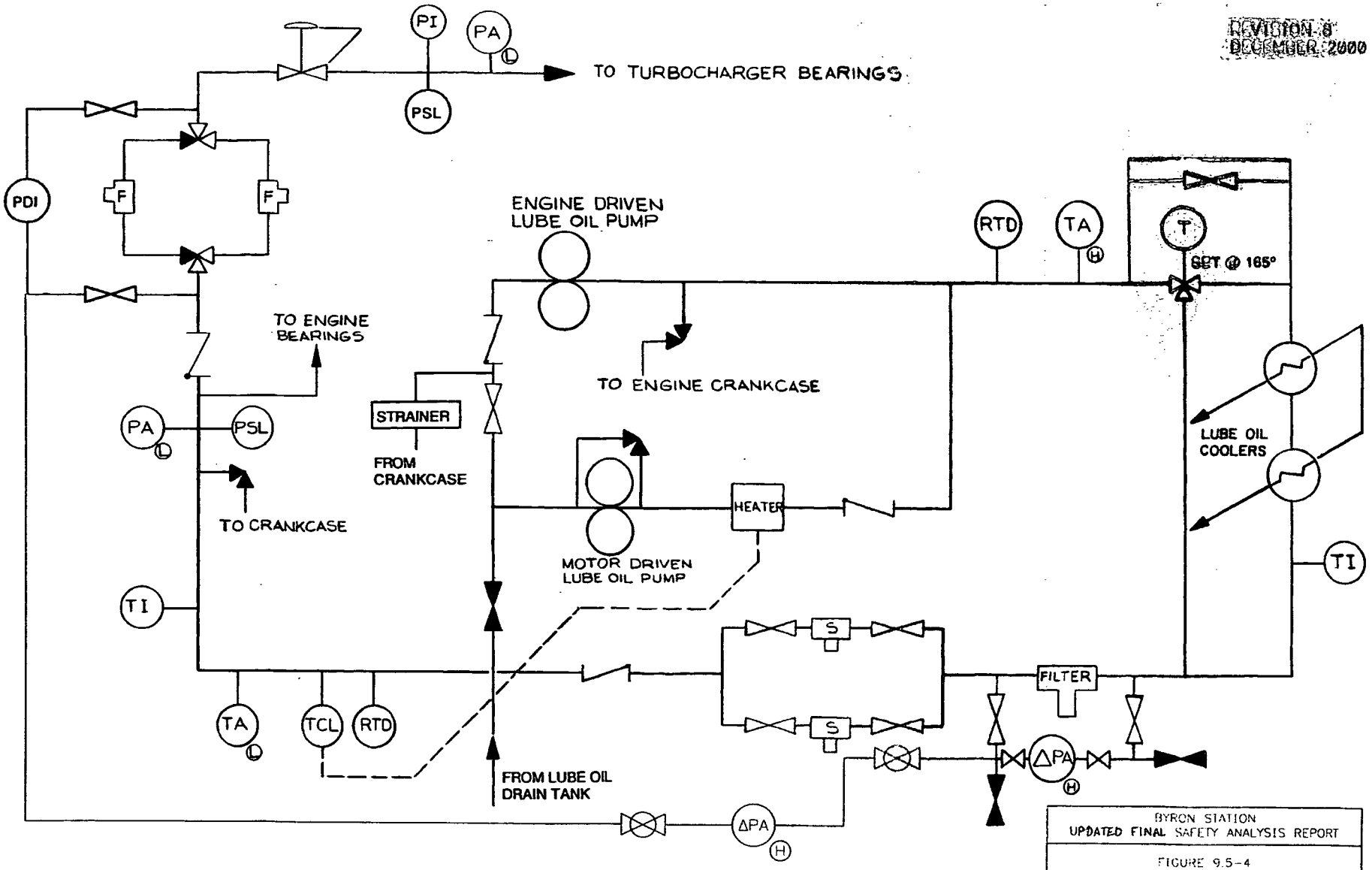

BYRON STATION
UPDATED FINAL SAFETY ANALYSIS REPORT

FIGURE 9.5-4

DIESEL-GENERATOR
LUBRICATION SYSTEM

Figures 9.5-5 through 9.5-7 have been deleted intentionally.