U.S.NRC
UNITED STATES NUCLEAR REGULATORY COMMISSION
Protecting People and the Environment

NUCLEAR REGULATORY COMMISSION

Reactor Technology Training Branch

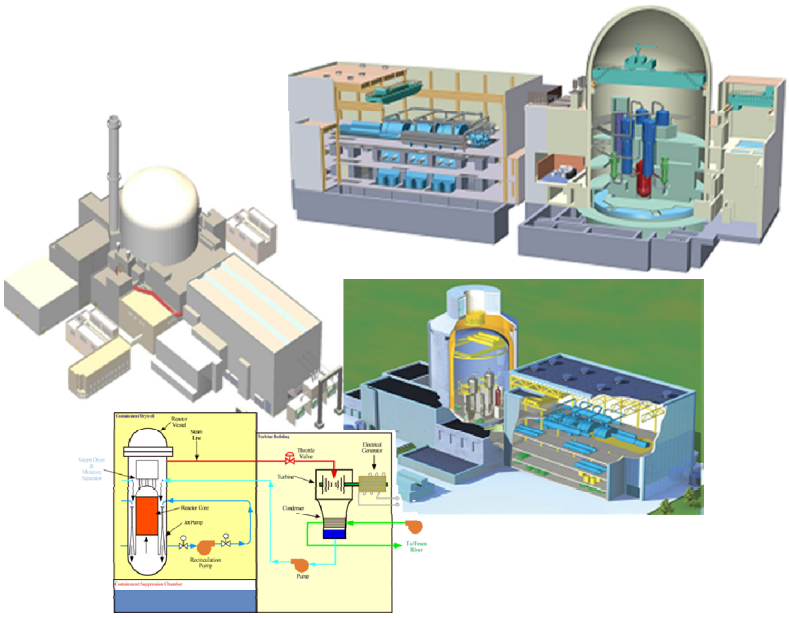

Part I

Introduction to Reactor Technology - PWR

Chapter 3.0 Combustion Engineering Plant Description

HRTD
Human Resources
Training & Development

UNITED STATES

NUCLEAR REGULATORY COMMISSION

HUMAN RESOURCES TRAINING & DEVELOPMENT

Introduction to Reactor Technology

This manual is a text and reference document for the Introduction to Reactor Technology. It should be used by students as a study guide during attendance at this course. This manual was compiled by staff members from the Human Resources Training & Development in the Office of Human Resources.

The information in this manual was compiled for NRC personnel in support of internal training and qualification programs. No assumptions should be made as to its applicability for any other purpose. Information or statements contained in this manual should not be interpreted as setting official policy. The data provided are not necessarily specific to any particular nuclear power plant, but can be considered to be representative of the vendor design.

U.S. Nuclear Regulatory Commission
Technical Training Center • Osborne Office Center
5746 Marlin Road • Suite 200
Chattanooga, TN 37411-5677
Phone 423.855.6500 • Fax 423.855.6543

Table of Contents

Table of Contents 3-3
List of Figures 3-3
3.0 COMBUSTION ENGINEERING PLANT DESCRIPTION 3-4
3.0.1 Introduction 3-4
3.0.2 Mechanical Systems 3-4
3.0.2.1 Reactor Coolant System 3-4
3.0.2.2 Steam Generator 3-4
3.0.2.3 Emergency Core Cooling Systems 3-4
3.0.2.4 Control Element Assembly and Drive Mechanism 3-5
3.0.3 Plant Protection and Monitoring Systems 3-5
3.0.3.1 Reactor Protection System 3-5
3.0.3.2 Core Protection Calculators 3-6
3.0.3.3 Core Operating Limits Supervisory System 3-6
3.0.4 Summary 3-6

List of Figures

Figure 3.0-1, Reactor Coolant System - Elevation View 3-7
Figure 3.0-2, Reactor Coolant System - Plan View 3-8
Figure 3.0-3, Steam Generator Secondary Side 3-9
Figure 3.0-4, Emergency Core Cooling Systems 3-10
Figure 3.0-5, Full Length CEA 3-11
Figure 3.0-6, Control Element Drive Mechanism 3-12
Figure 3.0-7, Simplified Reactor Protection System 3-13
Figure 3.0-8, Coincidence Logic Matrix AB 3-14
Figure 3.0-9, CPC Software Block Diagram 3-15
Figure 3.0-10, Core Operating Limits Supervisory System Block Diagram 3-16

The information contained in this chapter pertains to current operational reactor designs. Advanced reactor designs are provided in separate chapters.

3.0 COMBUSTION ENGINEERING PLANT DESCRIPTION

3.0.1 Introduction

This chapter provides a basic introduction to the Combustion Engineering (CE) technology by discussing the major differences between a Westinghouse design and a CE design. The first part of the discussion will be about the mechanical systems, specifically the reactor coolant system, the steam generator, the emergency core cooling systems, the control element assembly, and the control element drive mechanism. The second part will discuss plant protection and monitoring systems.

3.0.2 Mechanical Systems

3.0.2.1 Reactor Coolant System

The Reactor Coolant System (RCS) consists of two heat transport loops, each of which has two reactor coolant pumps and one steam generator. The reactor coolant exits the reactor vessel and is transported through hot leg (T_h) piping to the steam generators. The reactor coolant leaves the steam generator through two cold legs (T_c), each containing a reactor coolant pump. In each loop, the coolant is returned to the reactor vessel.

Figure 3.0-1 shows an elevation view of the RCS. Figure 3.0-2 shows a plan view of the system. The hot leg piping is 42” in diameter, and the cold leg piping is 30”. The RCS is designed to 2500 psia, with normal operating pressure around 2250 psia. T_{avg} at 100% power is 583°F.

3.0.2.2 Steam Generator

The CE steam generators are vertical, inverted, U-tube, tube and shell heat exchangers similar to the Westinghouse design. Each of the two steam generators in a CE plant are much larger than those in a four loop Westinghouse plant with the same rated electrical output. Each CE steam generator has 8,400 tubes providing 86,000 square feet of heat transfer area. Figure 3.0-3 shows the design features of a CE steam generator.

3.0.2.3 Emergency Core Cooling Systems

The emergency core cooling systems (Figure 3.0-4) consist of the High Head Injection System (HPSI), the Low Head Injection System (LPSI), and the Safety Injection Tanks (SITs).

The high head injection system consists of two trains. Borated water is taken from the refueling water storage tank during the injection phase or from the containment sump during the recirculation phase and pumped to the cold legs through motor operated valves. The HPSI pumps have a discharge pressure of 1600 psig. Three non-safety related positive

displacement pumps in the chemical and volume control system provide normal makeup to the RCS. These pumps charge water from boric acid makeup tanks into the RCS during an accident, but since they are non-safety related, this flow is not taken credit for in the FSAR accident analysis.

The low pressure injection system, or shutdown cooling system, consists of two trains. Water is taken from the refueling water storage tank during the injection phase. The LPSI pumps have a discharge pressure of 150 psig. The LPSI pumps are capable of taking a suction from the recirculation sump, but the HPSI system is designed to perform the recirculation function. When the LPSI system is aligned for shutdown cooling, the LPSI pump takes a suction on the RCS hot leg and discharges the water through the shutdown cooling heat exchangers to the RCS cold legs. Note that the shutdown cooling heat exchangers are normally aligned in the containment spray flowpath.

There are four safety injection tanks, one on each cold leg. The SITs are filled with borated water and pressurized with nitrogen. The normal pressure in the tanks is approximately 600 psig.

3.0.2.4 Control Element Assembly and Drive Mechanism

A CE control element assembly (CEA) has a spider and hub design with five fingers which are nearly one inch in diameter and consist of boron carbide pellets. A CEA is shown in Figure 3.0-5. The control element drive mechanism is a magnetic jack design (Figure 3.0-6), except five coils are used instead of three. A control element drive mechanism control system (CEDMCS) is used to automatically or manually move the CEAs.

3.0.3 Plant Protection and Monitoring Systems

3.0.3.1 Reactor Protection System

A simplified CE Reactor Protection System (RPS) is shown in Figure 3.0-7. CE uses separate instruments for protection and control. If one of the protection channel parameters exceeds its trip value, the associated bistable will trip. This will deenergize the trip relay in that channel. The six logic matrices consist of a series-parallel contact network (Figure 3.0-8) and are used to determine whether the two- out-of-four coincidence trip logic has been satisfied.

When a logic matrix determines that the trip coincidence is satisfied, the associated logic matrix relays deenergize, opening the associated trip path contacts. When these contacts open, all circuit breaker control relays deenergize and all reactor trip circuit breakers open. Eight reactor trip circuit breakers are in the circuit between the motor generator sets and the CEDM coils. One pair of breakers on each side must open for the CEAs to trip into the core.

The engineered safety features actuation system operation is very similar to the RPS described above.

3.0.3.2 Core Protection Calculators

Core protection calculators (CPC) (Figure 3.0-9) have been added to the newer CE plants to generate reactor trip signals based upon local power density and DNBR, which prevents these limits from being exceeded during anticipated operational occurrences. The CPC is a digital computer that continuously calculates a conservative value of plant local power density and DNBR using safety channel inputs from RCS flow, RCS pressure, RCS temperatures, reactor power, and flux distribution.

3.0.3.3 Core Operating Limits Supervisory System

The core operating limits supervisory system (COLSS) (Figure 3.0-10) is a plant computer program which provides comprehensive and continuously updated information. The program consists of on-line power distribution, DNBR correlation, calorimetric power, and maximum linear power generation rate calculations. When the COLSS is operable, the plant Technical Specifications allows the plant to operated closer to the kw/ft and DNBR limits.

3.0.4 Summary

This chapter discussed the major differences between a Westinghouse design plant and a Combustion Engineering design plant. The CE plant has two reactor coolant loops, each of which has two reactor coolant pumps and one steam generator.

The emergency core cooling systems in a CE plant consist of a high pressure injection system which is also used for the recirculation phase, a low pressure injection system which is also used for shutdown cooling, and four safety injection tanks.

The CE reactor protection system uses a two- out-of-four coincidence logic for reactor trips and engineered safety features actuations. The core protection calculator and the core operating limits supervisory system allows the plant to operate closer to the kw/ft and DNBR safety limits.

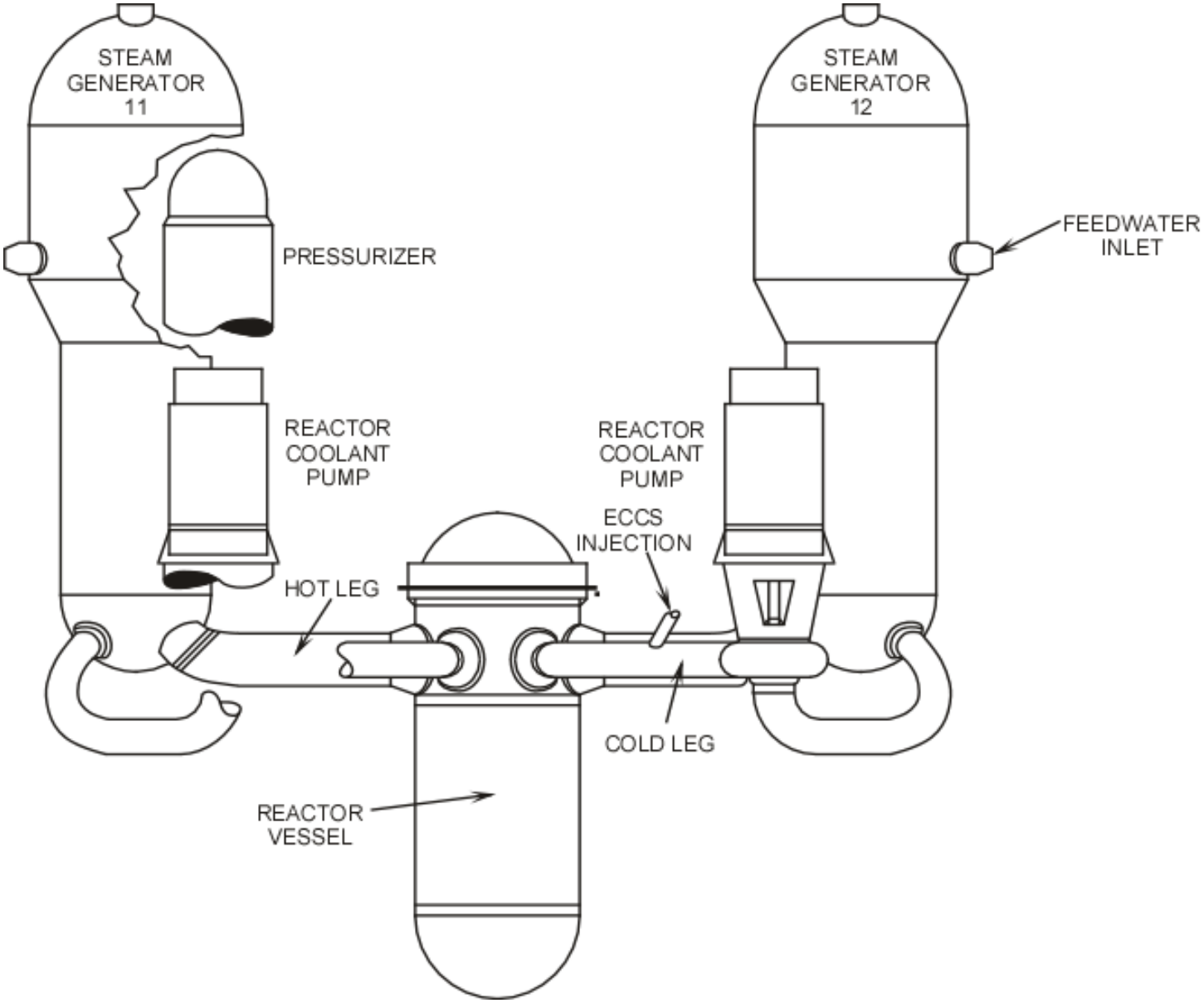

Figure 3.0-1, Reactor Coolant System - Elevation View

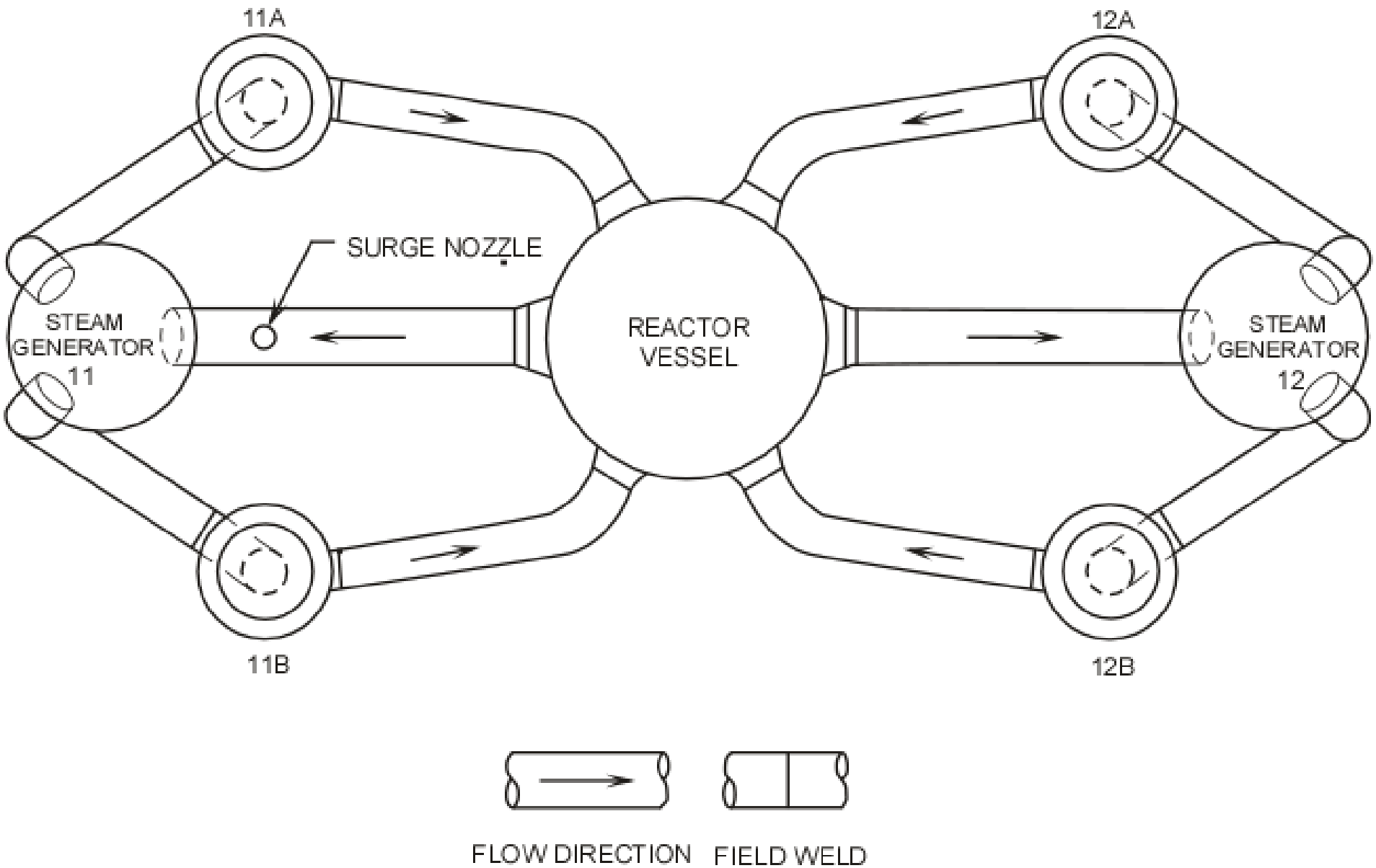

Figure 3.0-2, Reactor Coolant System - Plan View

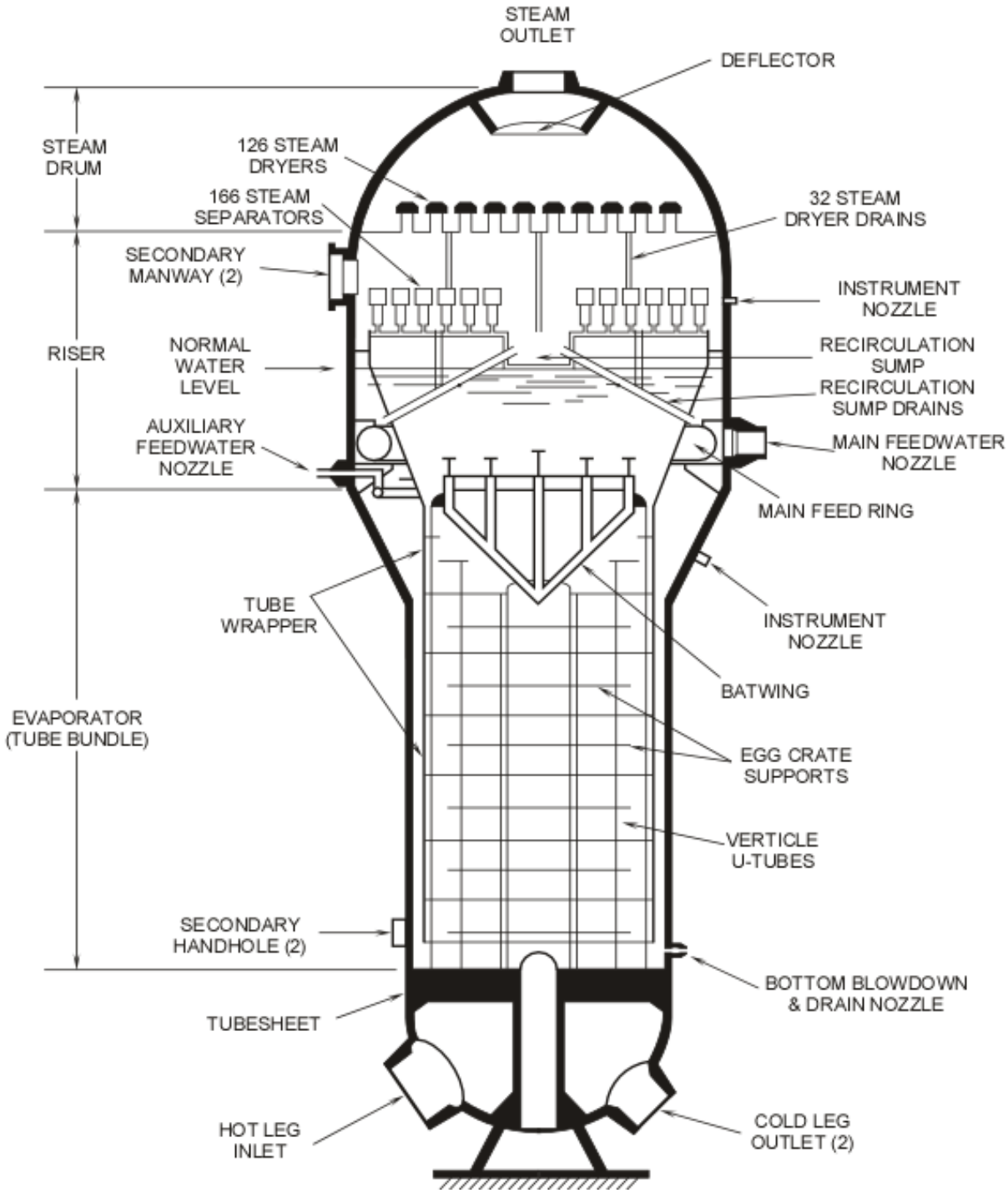

Figure 3.0-3, Steam Generator Secondary Side

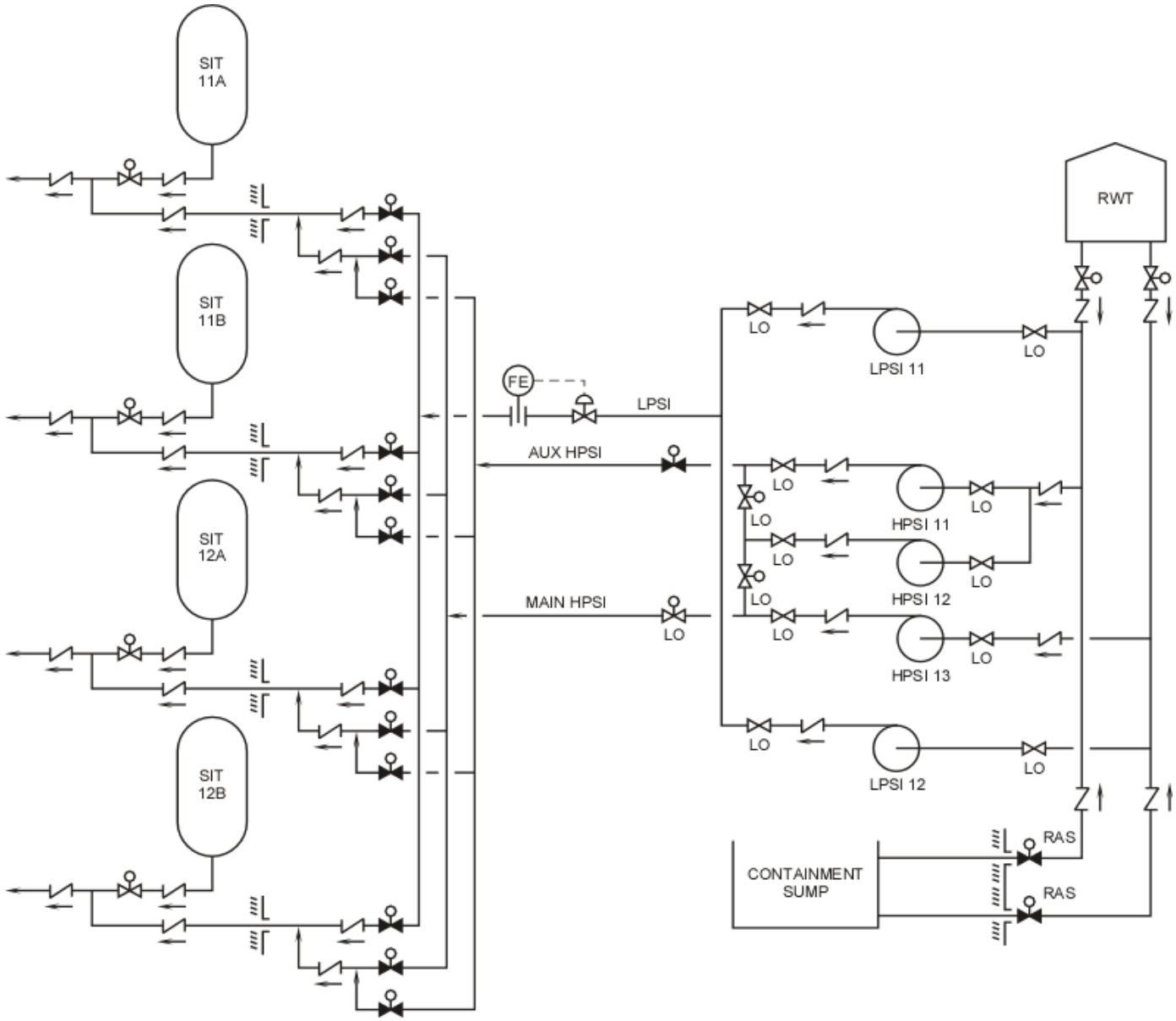

Figure 3.0-4, Emergency Core Cooling Systems

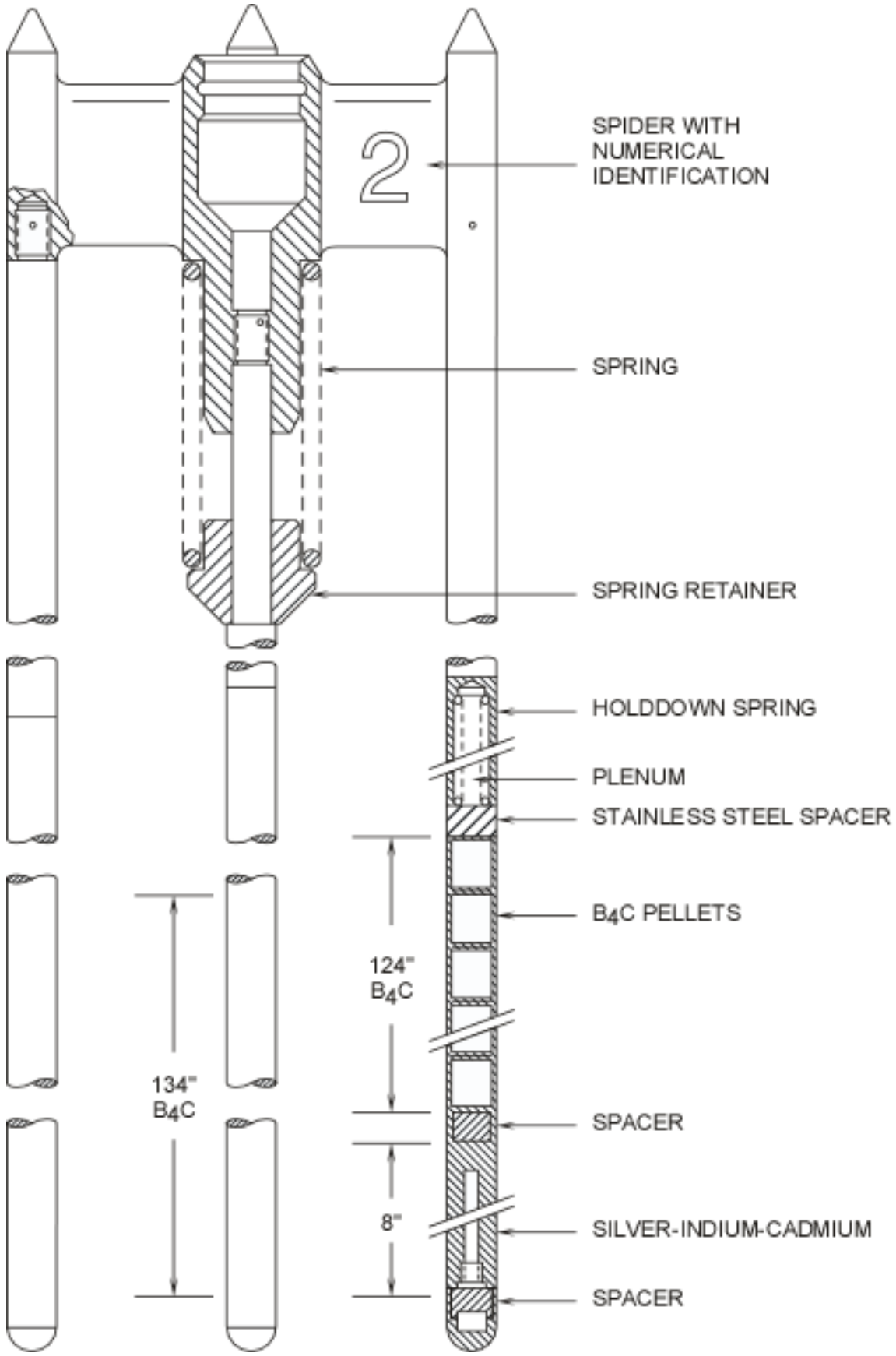

Figure 3.0-5, Full Length CEA

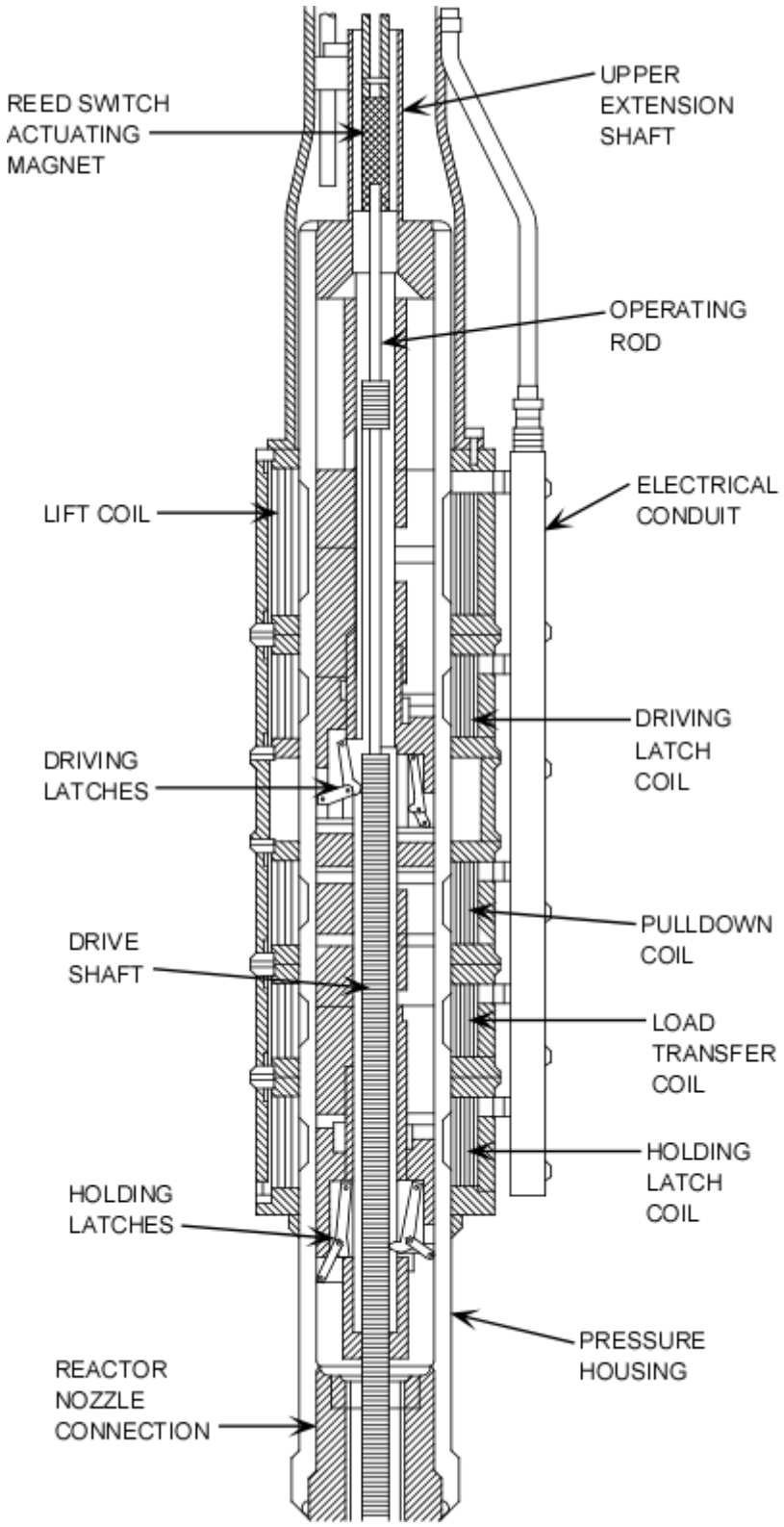

Figure 3.0-6, Control Element Drive Mechanism

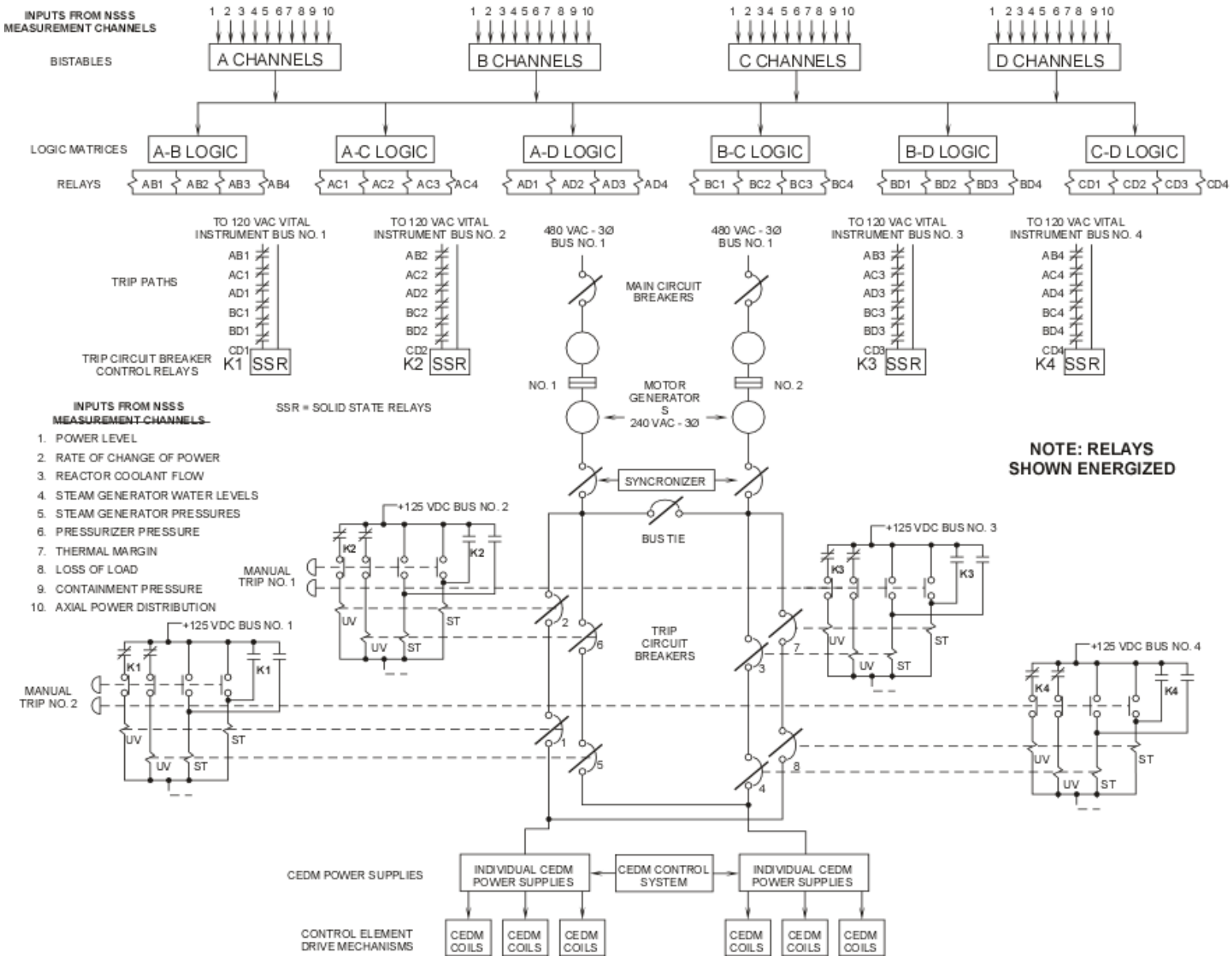

Figure 3.0-7, Simplified Reactor Protection System

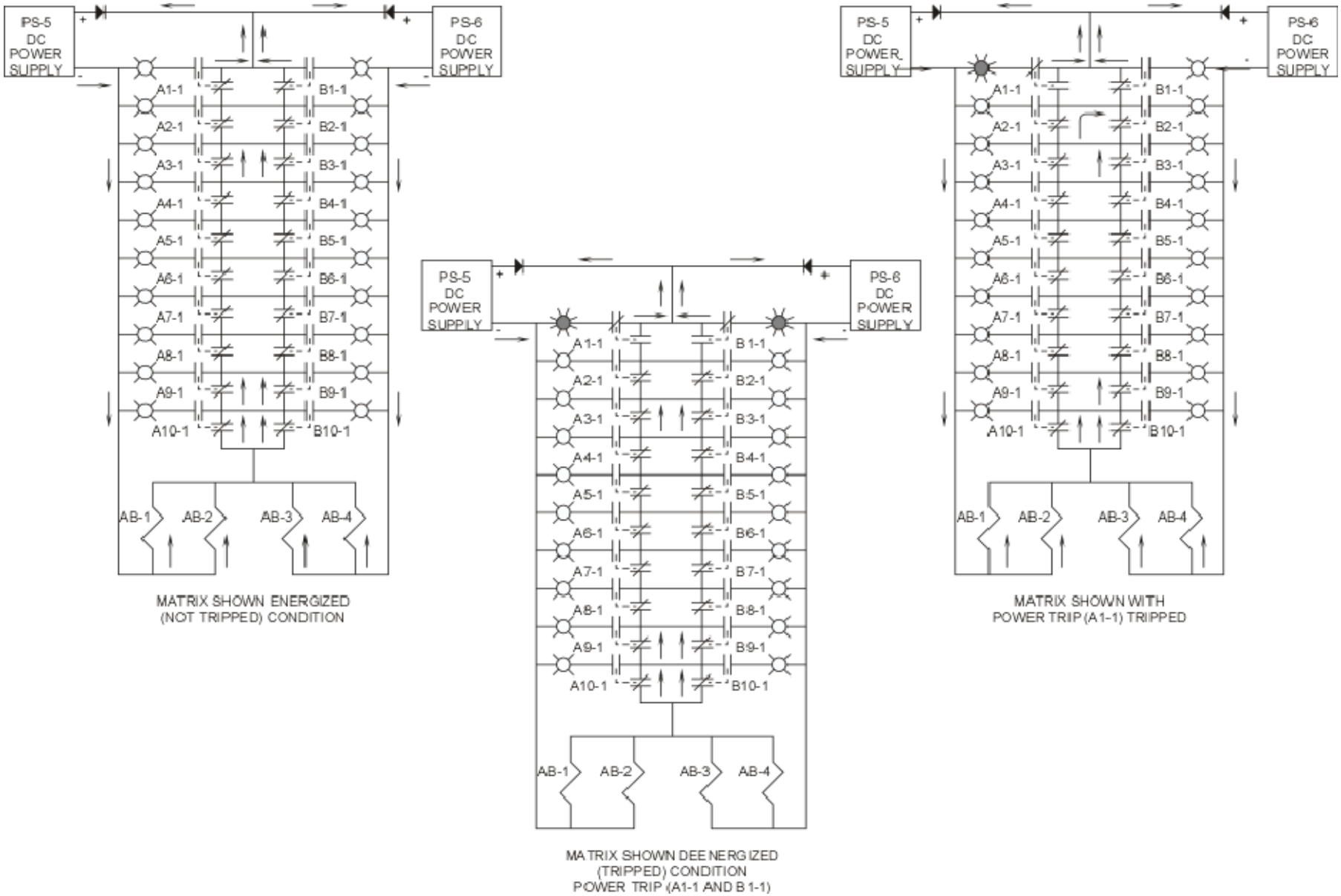

Figure 3.0-8, Coincidence Logic Matrix AB

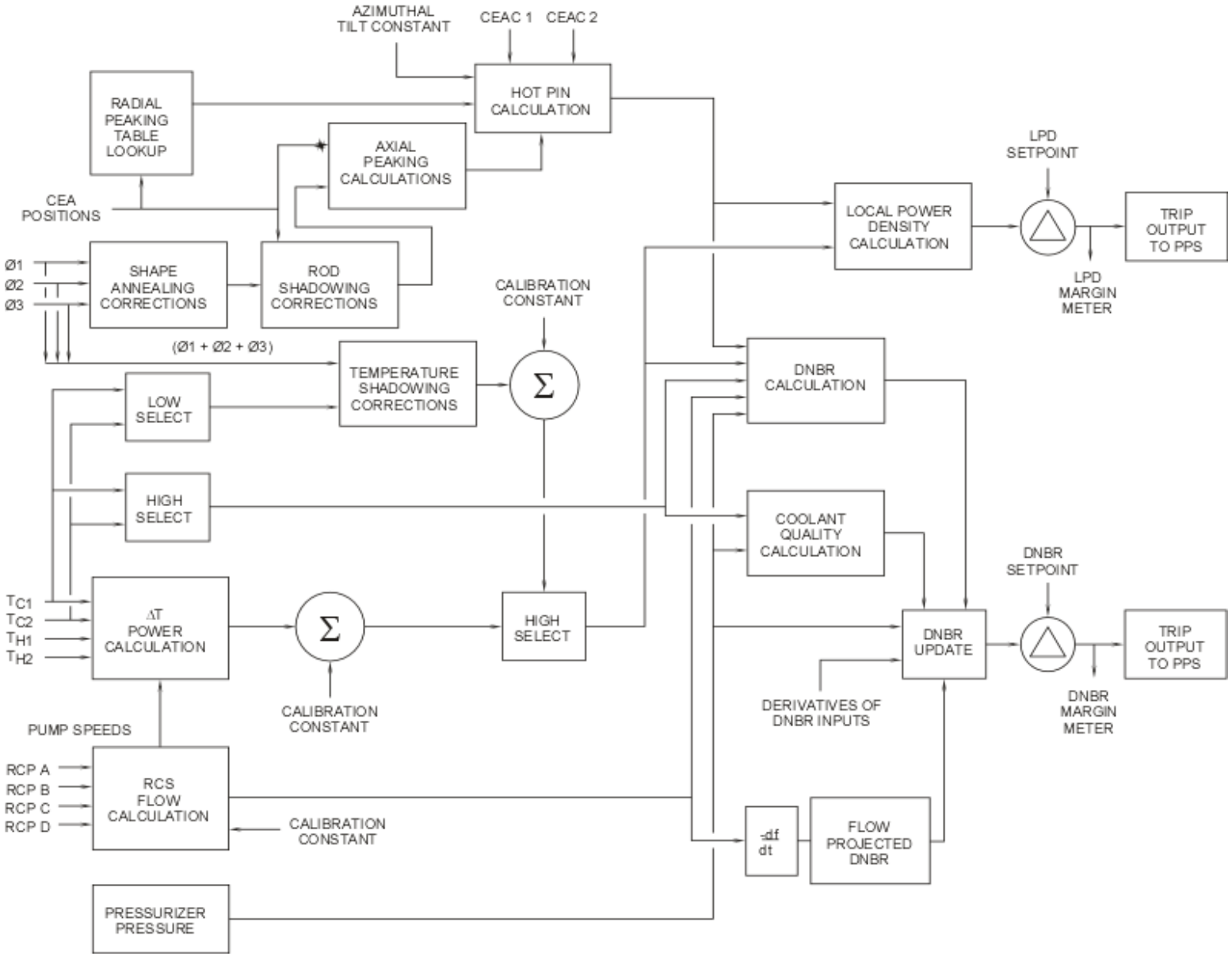

Figure 3.0-9, CPC Software Block Diagram

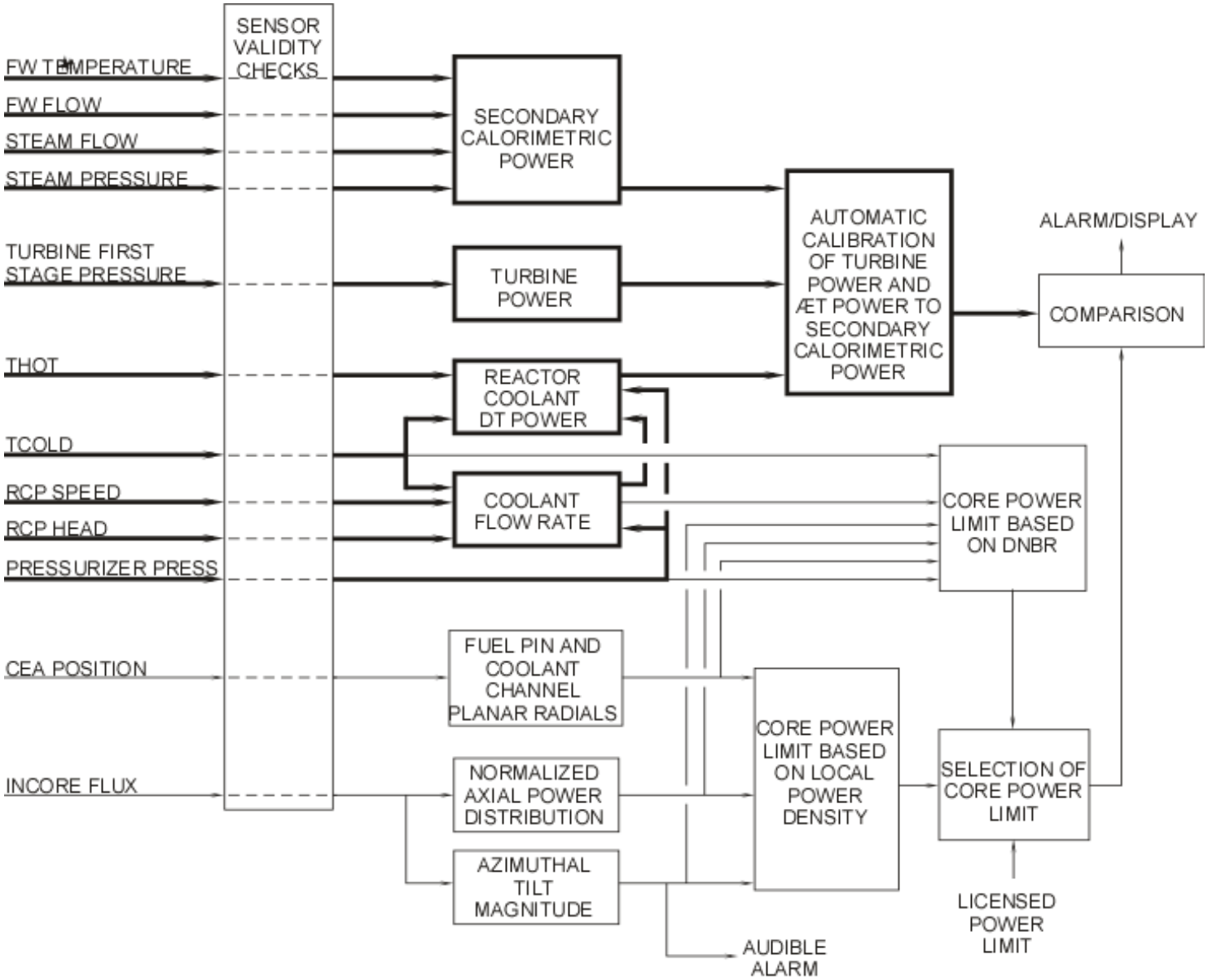

Figure 3.0-10, Core Operating Limits Supervisory System Block Diagram