General Electric Systems Technology Manual

Chapter 1.4

Types of Boiling Water Reactors

TABLE OF CONTENTS

1.4 TYPES OF BOILING WATER REACTORS..... 1

1.4.1 Forced Circulation BWRS..... 1

1.4.2 Forced Circulation BWR Control Systems..... 2

LIST OF FIGURES

1.4-1 Boiling Water Reactors In Various Systems

1.4 TYPES OF BOILING WATER REACTORS

In a direct cycle BWR, (Figure 1.4-1) steam leaving the reactor passes directly to the turbine. In an indirect cycle BWR, steam is passed to a primary coolant/secondary steam generator. No economic incentive exists for the latter cycle, although it does possess some advantage in that radioactive particles from the primary coolant normally cannot transfer to the steam used in the turbine generator portion of the plant. Dual cycle plants employ a combination of direct and indirect cycles. The first large utility owned BWR (Dresden 1) employed this dual cycle concept. Current BWRs use only the forced circulation direct cycle because it is more economical.

In a forced circulation direct cycle reactor system, the nuclear fuel generates heat within the reactor vessel and boils the water, producing wet steam that passes through internal steam separators and dryers. The water within the reactor is circulated through the core by two external recirculation pumps. The steam is directed from the reactor to the turbine, entering the turbine steam chest at about 950 psi and 540^0 F. Steam leaving the high pressure turbine passes through the moisture separator/reheater units before being admitted into the low pressure turbines. The low pressure turbine's exhaust steam is condensed in the main condenser, which also provides system deaeration. The condenser is followed by a full flow demineralizer system through which all condensate and makeup must pass before entering the feedwater heaters.

The demineralizer system removes corrosion products produced in the turbine, condenser, and feedwater piping. It also protects the reactor against condenser tube leaks and removes other sources of impurities which may enter the system in the makeup water. The turbine cycle uses a conventional regenerative feedwater system. The feedwater temperature and the number of feedwater heaters are selected in accordance with normal power plant considerations of turbine cycle performance and economics.

1.4.1 Forced Circulation BWRS

Power density in a BWR core may be increased by using a mechanical pumping system to force the water through the core. This is called a forced circulation BWR. In this design a portion of the coolant in the annulus area between the core shroud and vessel wall is taken outside the vessel in recirculation loops, where it is increased in pressure by means of recirculation pumps. Water at increased pressure is pumped from the two recirculation loops back into the bottom of the reactor pressure vessel via jet pumps. Flow orificing of the fuel support pieces provides desired flow distributions. Water enters the core through the fuel assembly nosepieces and passes upward inside the channels containing the fuel bundles, where it is heated to become a two phase, steam-water mixture. The steam-water mixture leaves the top of the fuel assemblies and enters a plenum area above the core which directs the flow into the steam separators. Here the water is separated by centrifugal action. The rejected water is returned to

recirculate through the pumping system. The steam then passes through a dryer where the last traces of water are removed. Dry steam exits through steam outlet nozzles at the top of the vessel body. Feedwater is added to the system through thermally sleeved spargers located in the downcomer annulus to match the inventory leaving the vessel as steam, thereby maintaining a constant water level above the reactor core. Here the feedwater joins the water rejected by the steam separators before entering the recirculation pumping system.

1.4.2 Forced Circulation BWR Control Systems

The fluid flow rates and reactivity level in a forced circulation direct cycle BWR require rigid control of steam flow from the reactor, of feedwater flow into the reactor, of recirculation flow through the reactor, and of control rod position. The design of the control systems considers conventional power generation objectives, such as reliability, ease of operation, and response times of the controlling parameter. Beyond the traditional power generation objectives, the control systems must incorporate features specific to reactivity control and nuclear plant safety. These considerations involve effects on moderator temperature, fuel temperature, and void content as a function of steam pressure; steam generation and feedwater input; fuel exposure; and automatic shutdown of the nuclear chain reaction during unsafe or potentially unsafe conditions.

DRESDEN 1 (BWR/1)

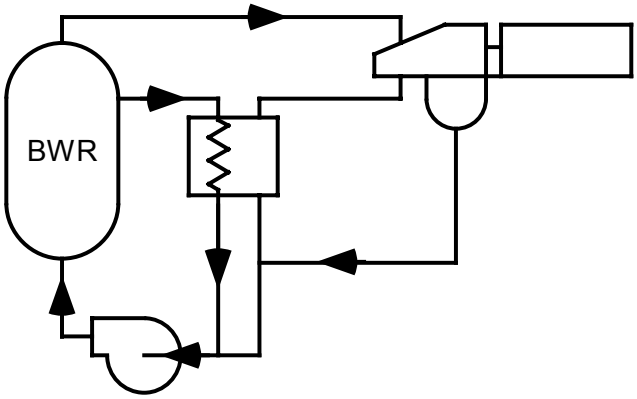

FORCED CIRCULATION, DUAL CYCLE

HUMBOLDT BAY (BWR/1)

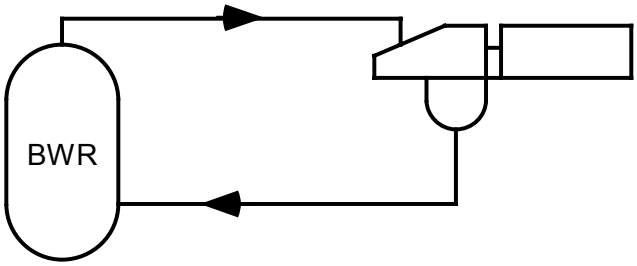

NATURAL CIRCULATION, DIRECT CYCLE

BIG ROCK POINT (BWR/1)
OYSTER CREEK (BWR/2)
DRESDEN 2&3 (BWR/3)
BROWNS FERRY (BWR/4)
LASALLE 1&2 (BWR/5)
GRAND GULF 1&2 (BWR/6)

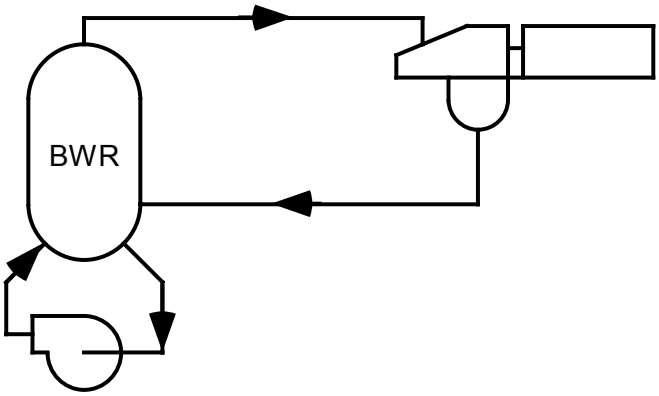

FORCE CIRCULATION, DIRECT CYCLE

Figure 1.4-1 Boiling Water Reactors In Various Systems