Plant Differences

Chapter 15.0

Objectives

1. Describe the basic design differences between the various Combustion Engineering plant generations.
2. Explain how later Combustion Engineering plants were able to increase their operating power densities.
3. Describe the basic control and protection system differences between the various Combustion Engineering plant generations.

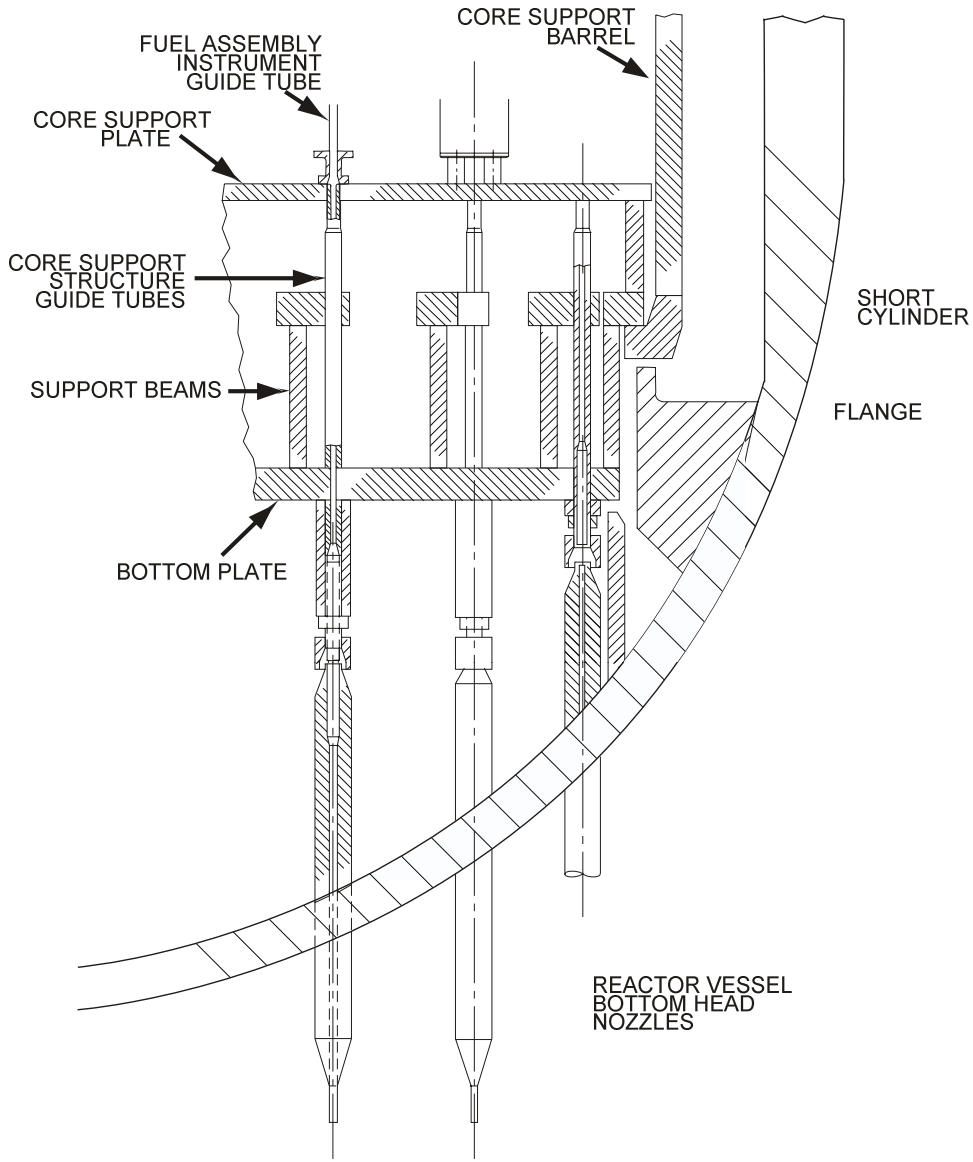

Figure 15-1 Core Support Plate and Lower Support Structure

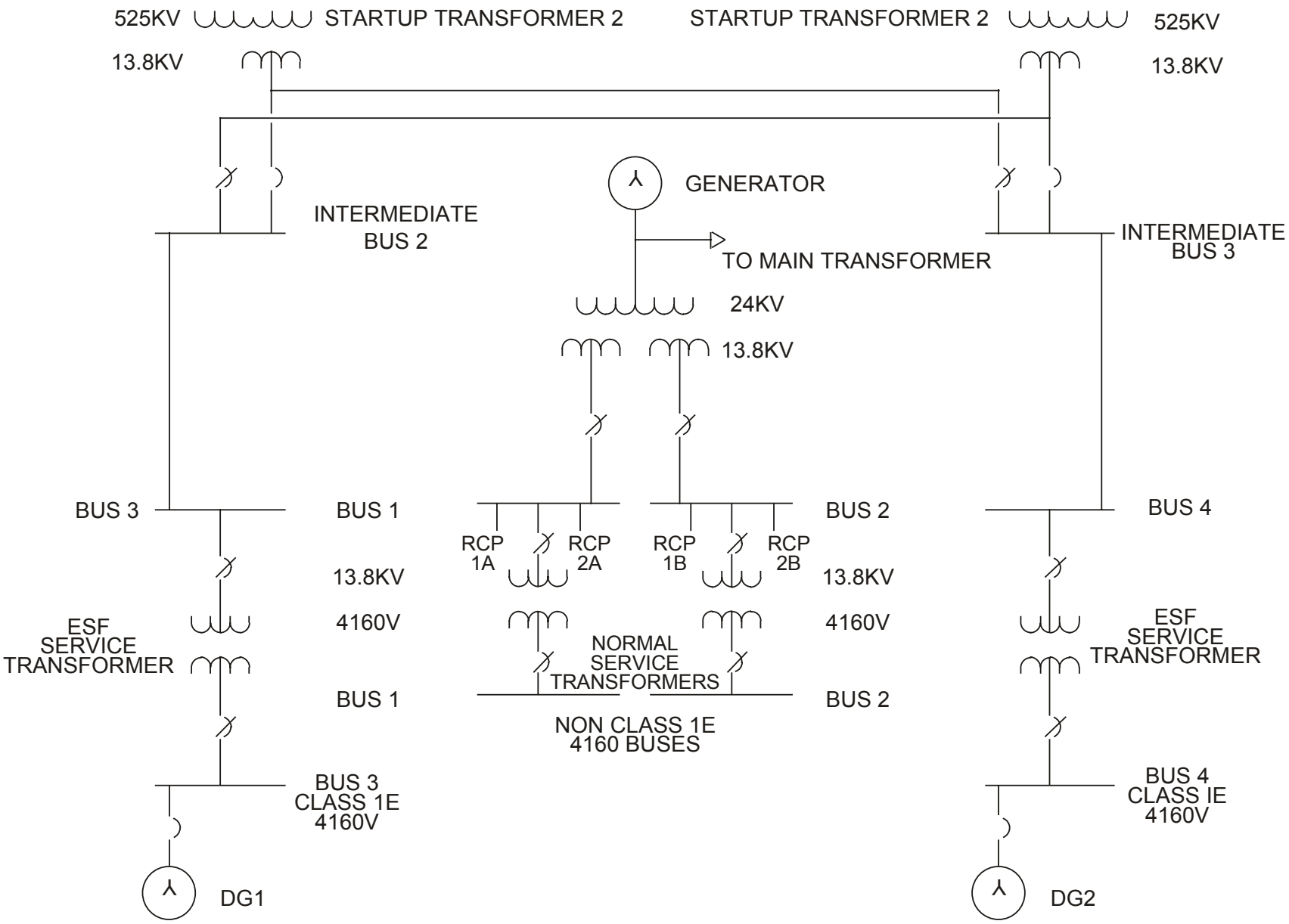

Figure 15-1 Palo Verde Electrical Distribution

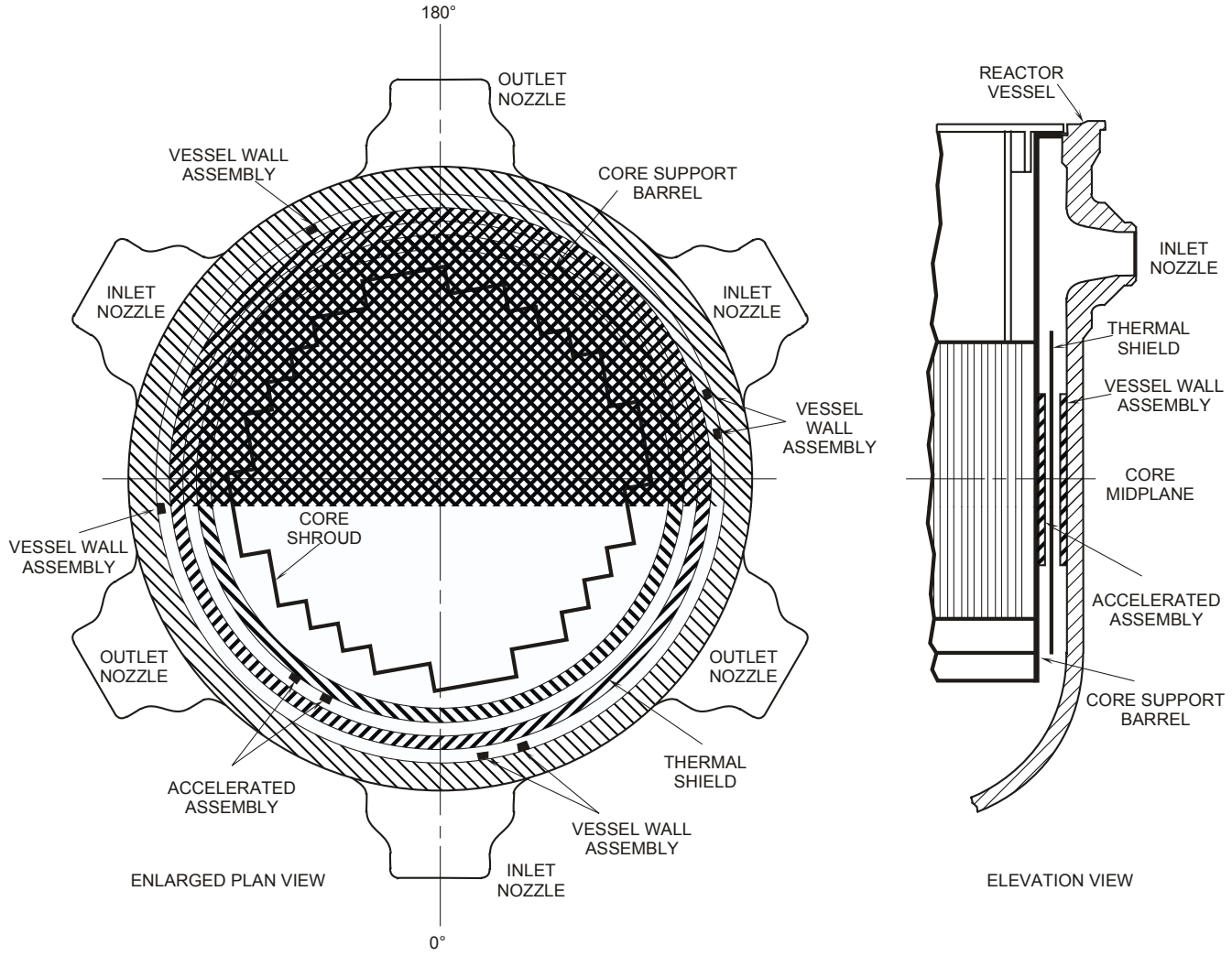

Figure 15-2 Typical Locations of Maine Yankee Surveillance Capsule Assemblies

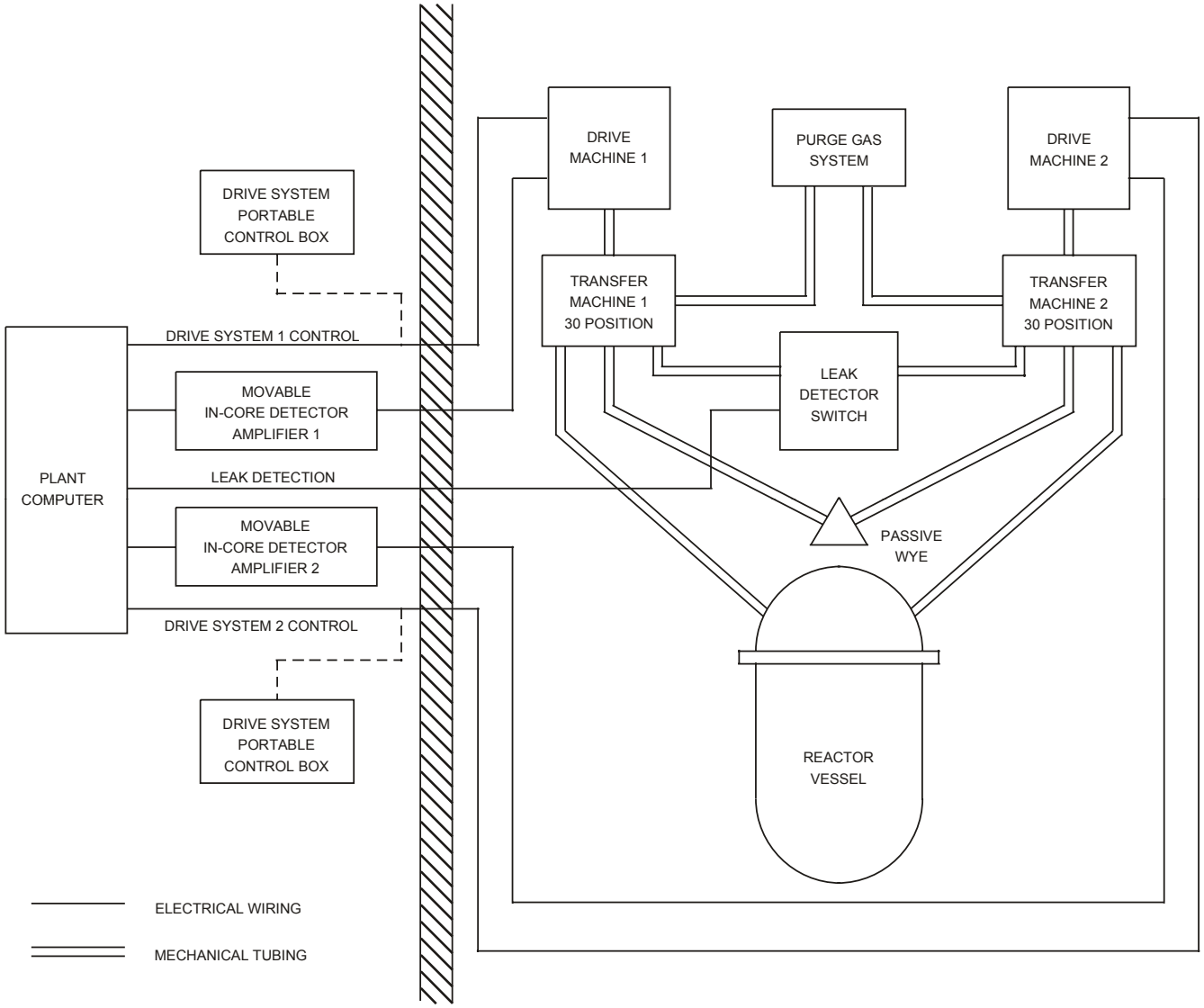

Figure 15-3 Movable Incore Layout

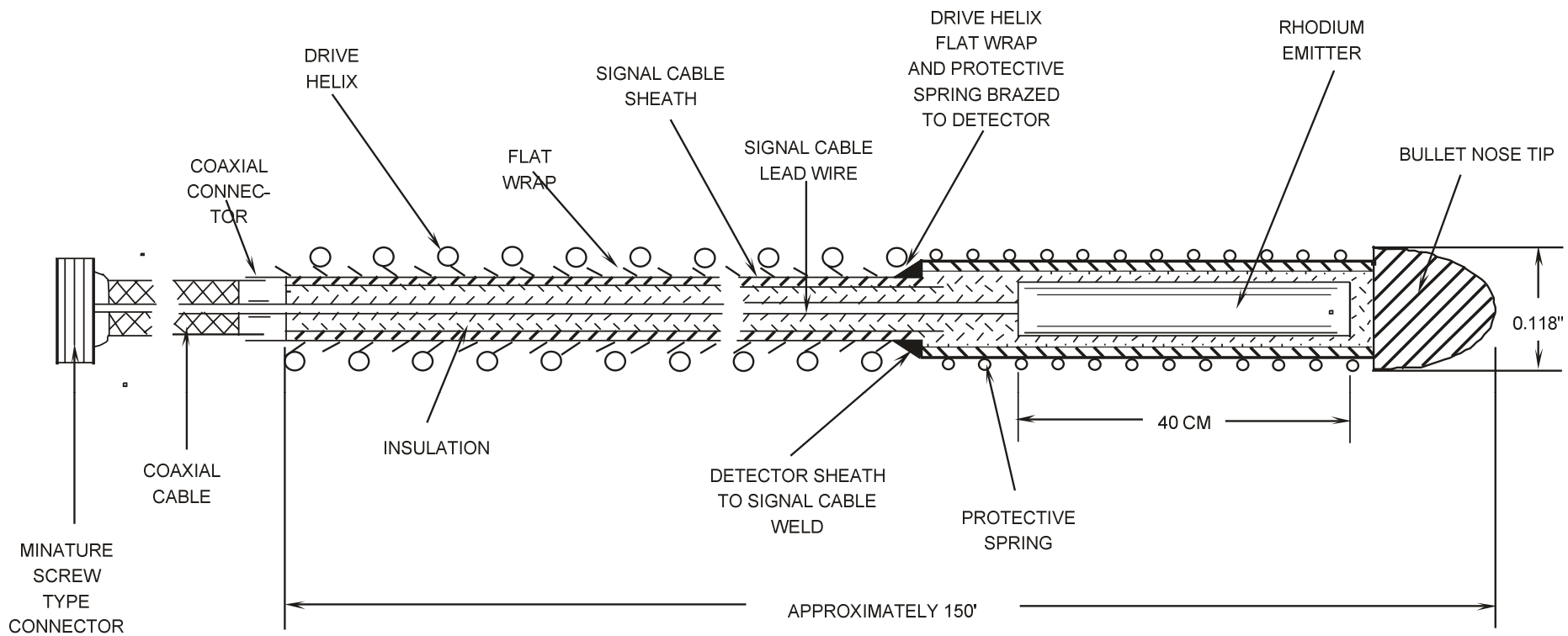

Figure 15-4 Movable Incore Detector

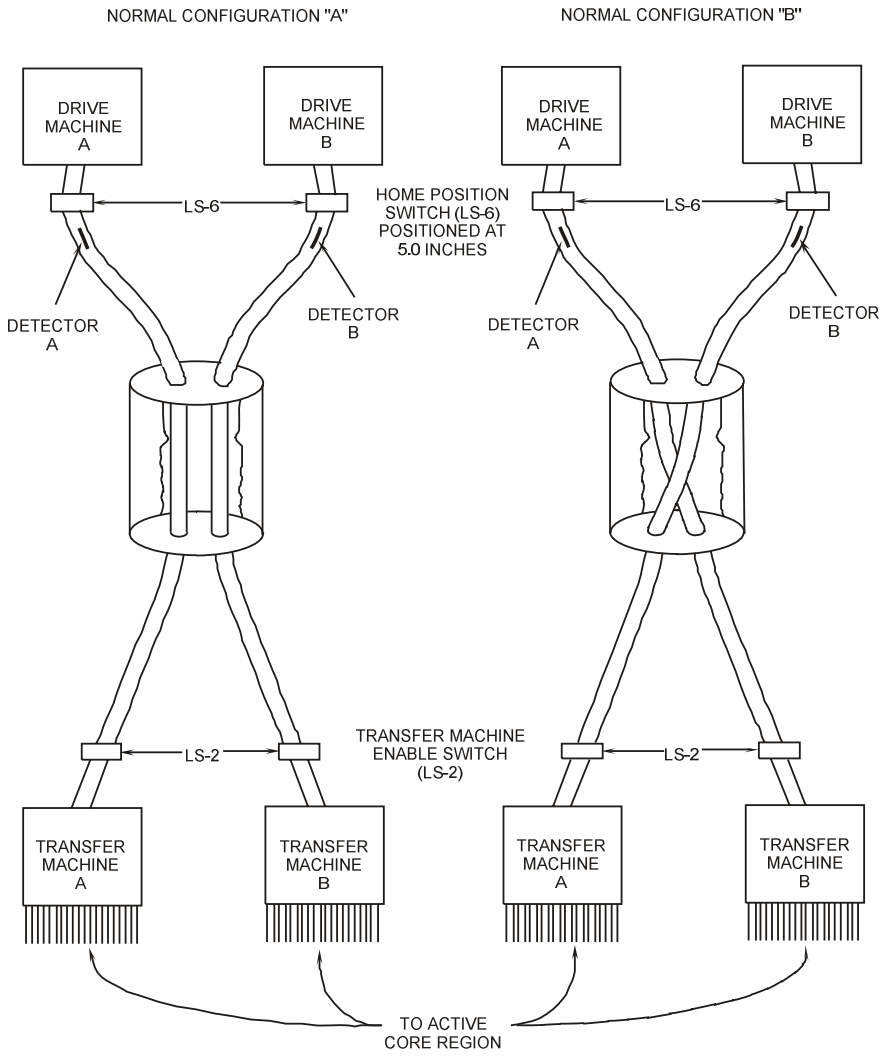

Figure 15-5 Drive Path Switching

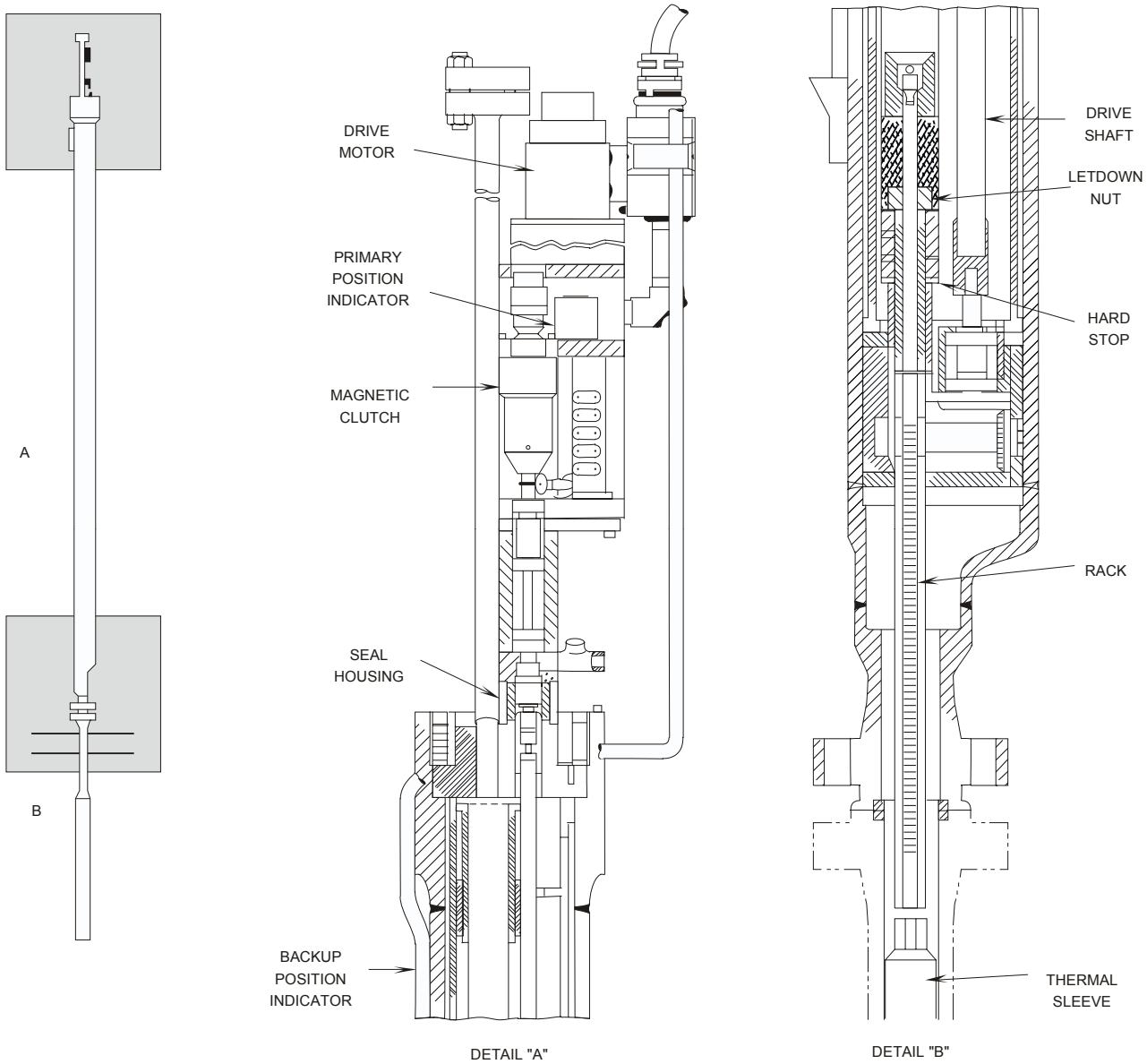

Figure 15-6 Control Rod Drive Mechanism

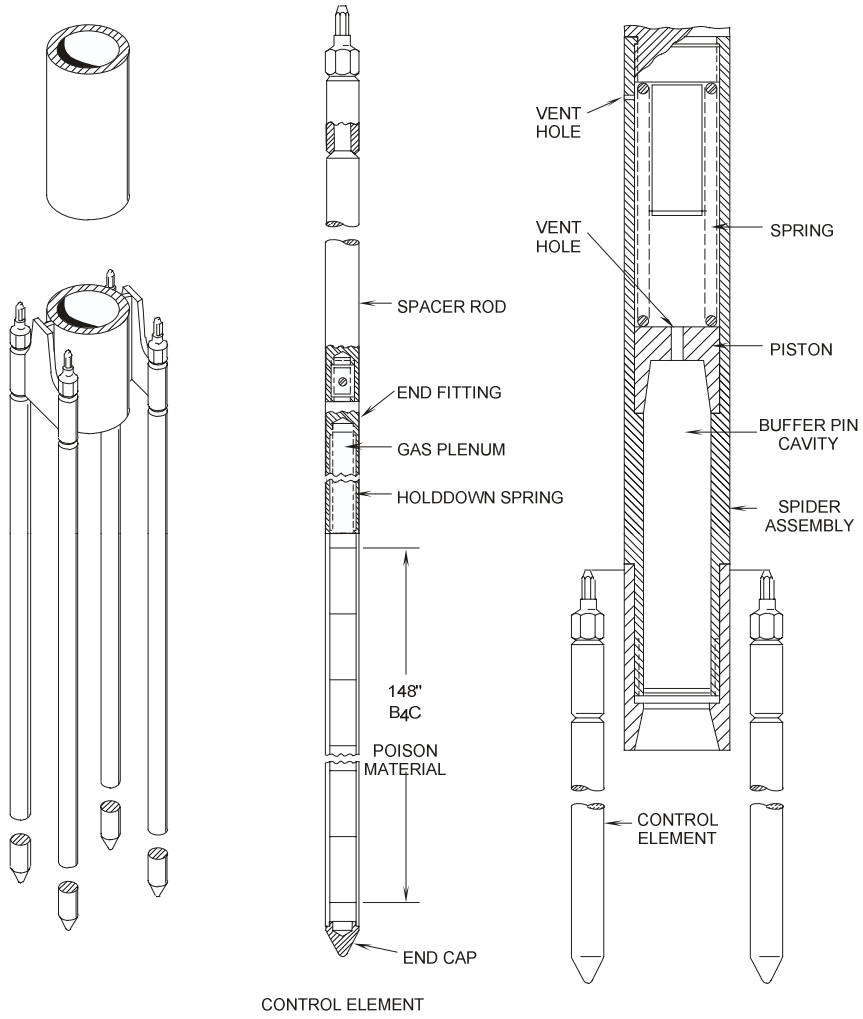

Figure 15-7 Four Element Control Element Assembly

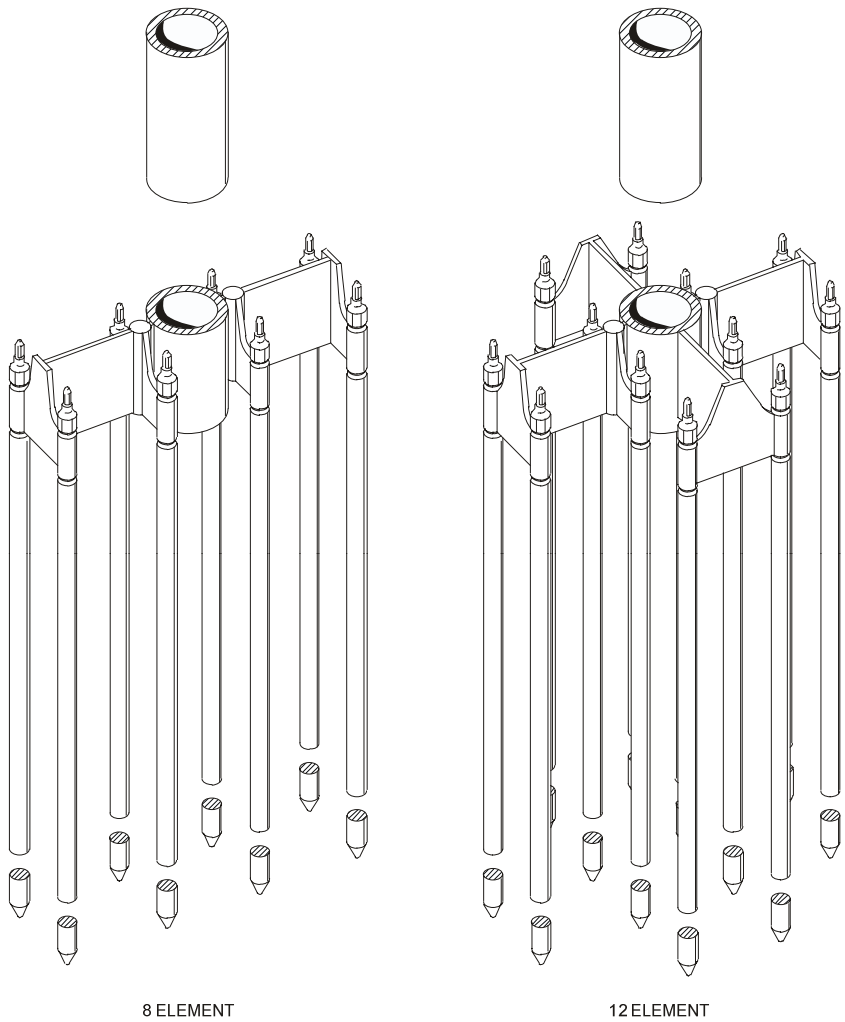

Figure 15-8 8 and 12 Element Control Element Assemblies

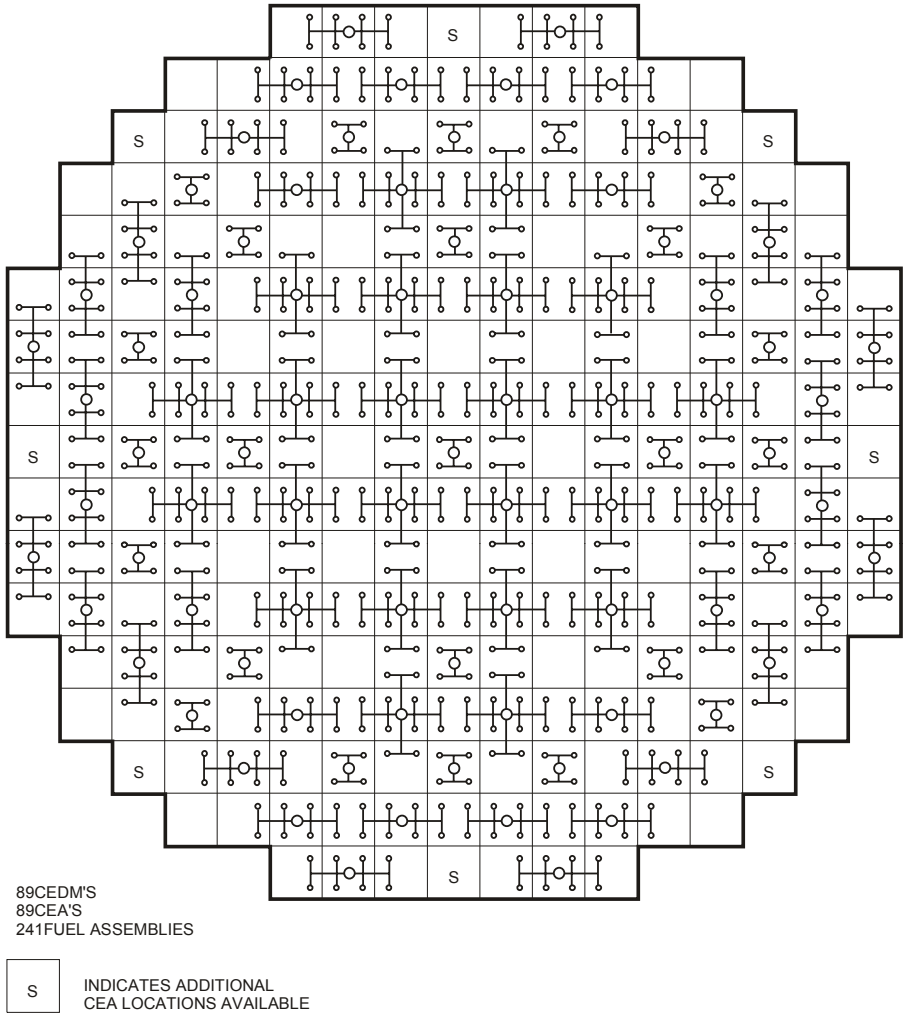

Figure 15-9 Control Element Pattern

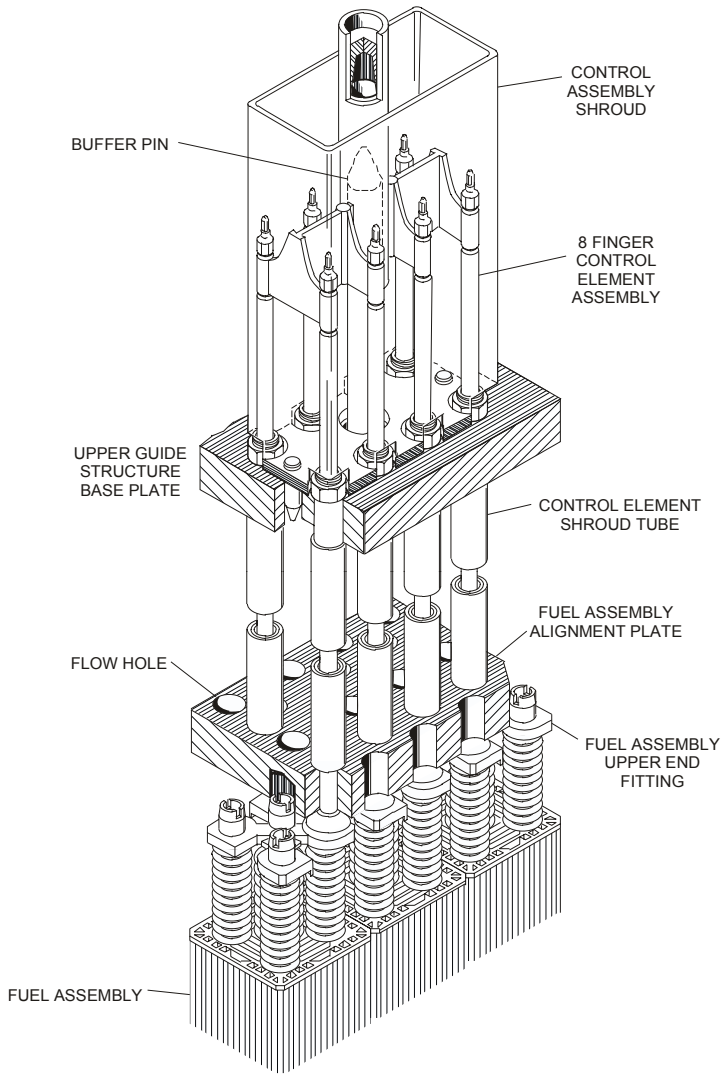

Figure 15-10 Fuel/Control Element/Upper Guide Structure Interface

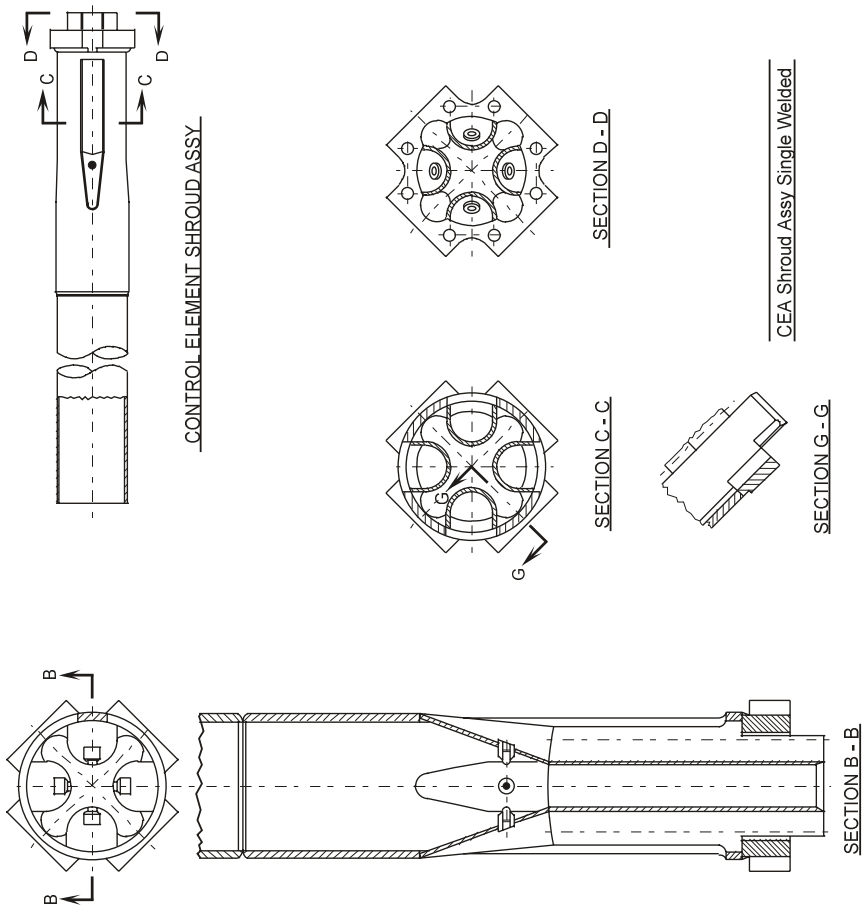

Figure 15-11 CEA Shroud

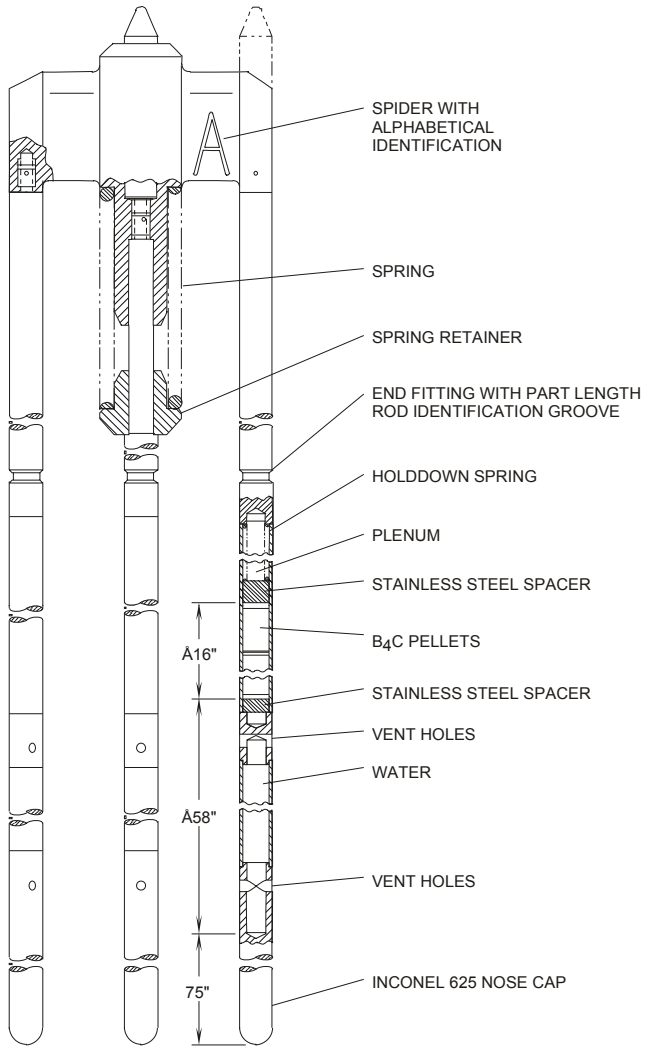

Figure 15-12 Part Length CEA

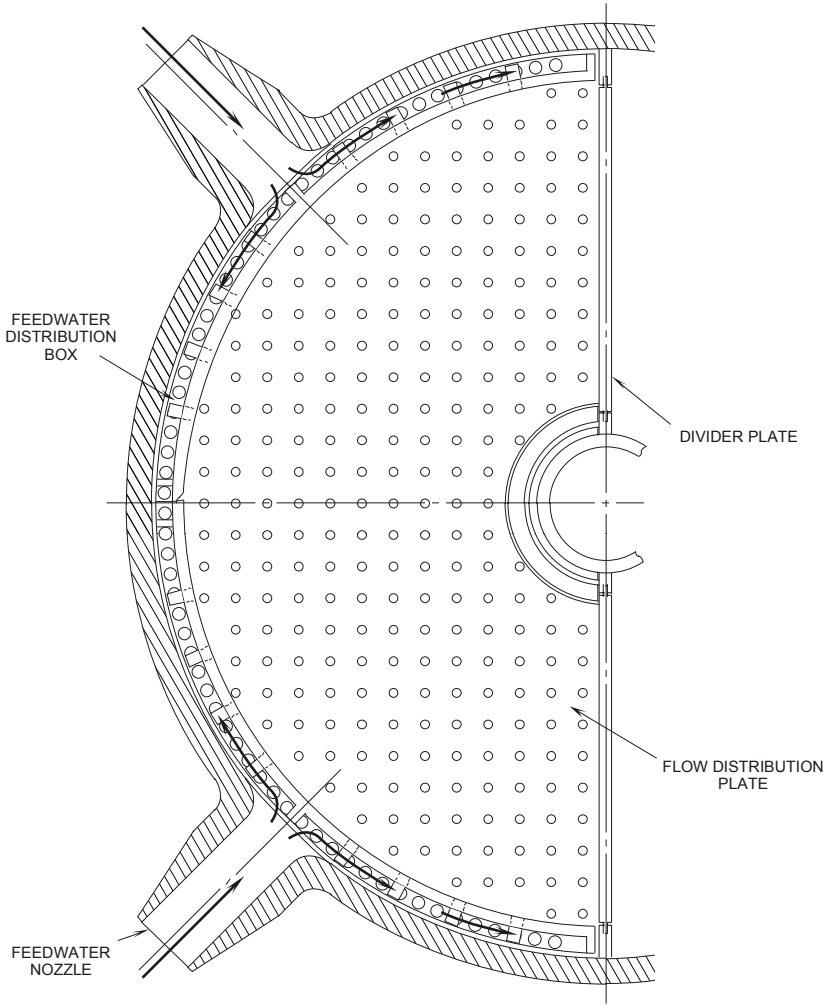

Figure 15-13 Economizer Plan View

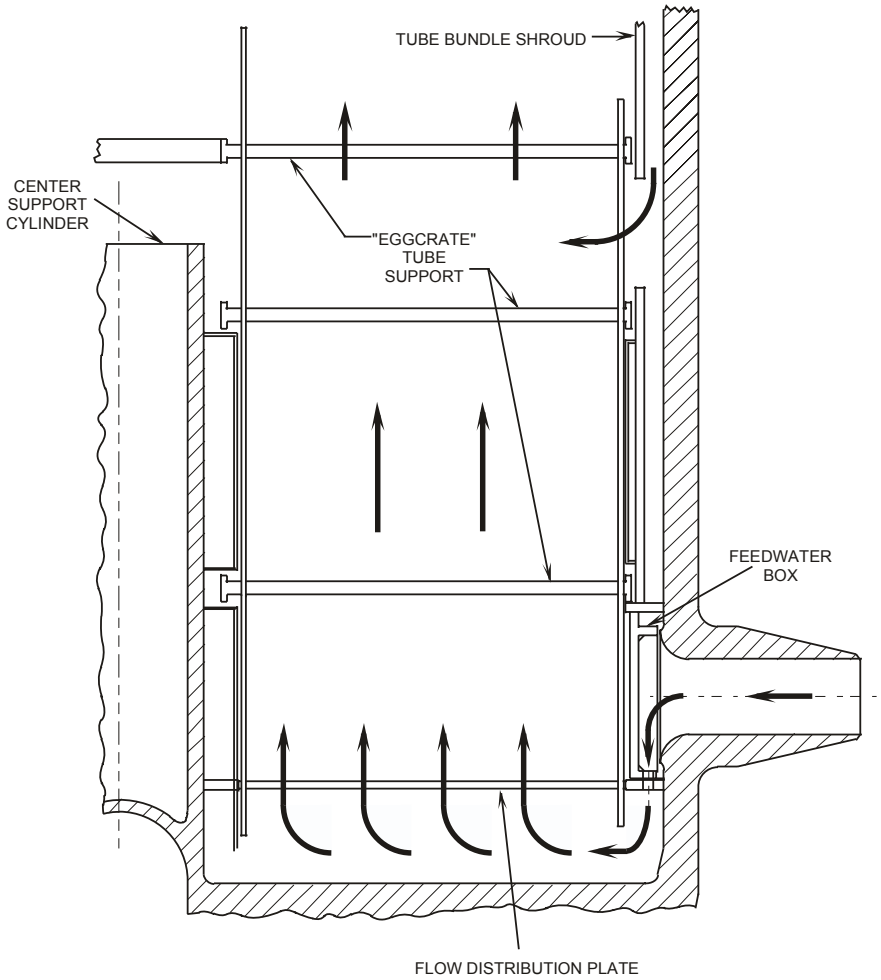

Figure 15-14 Economizer Elevation View

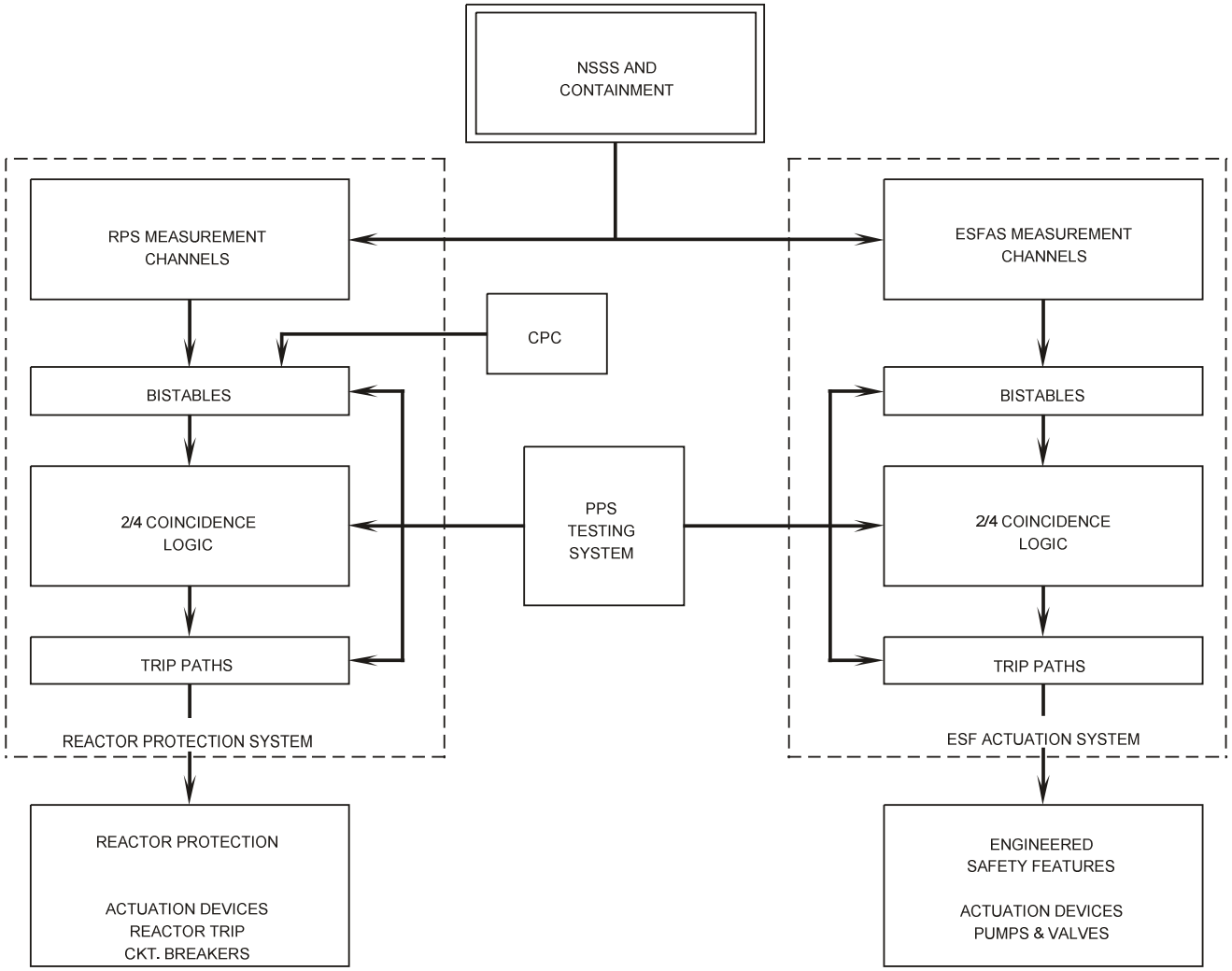

Figure 15-15 Plant Protection System Basic Block Diagram

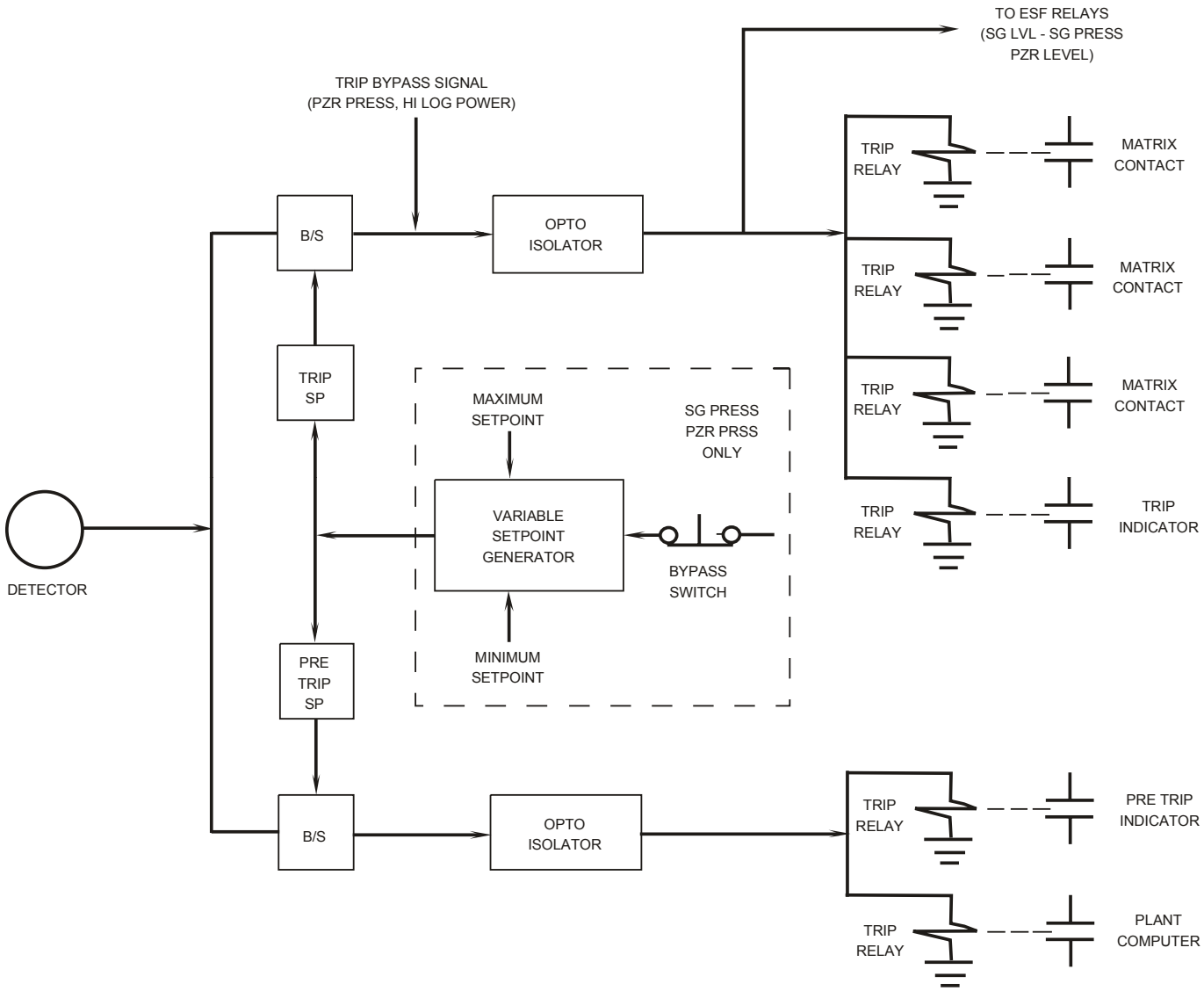

Figure 15-16 Analog Bistable Relay

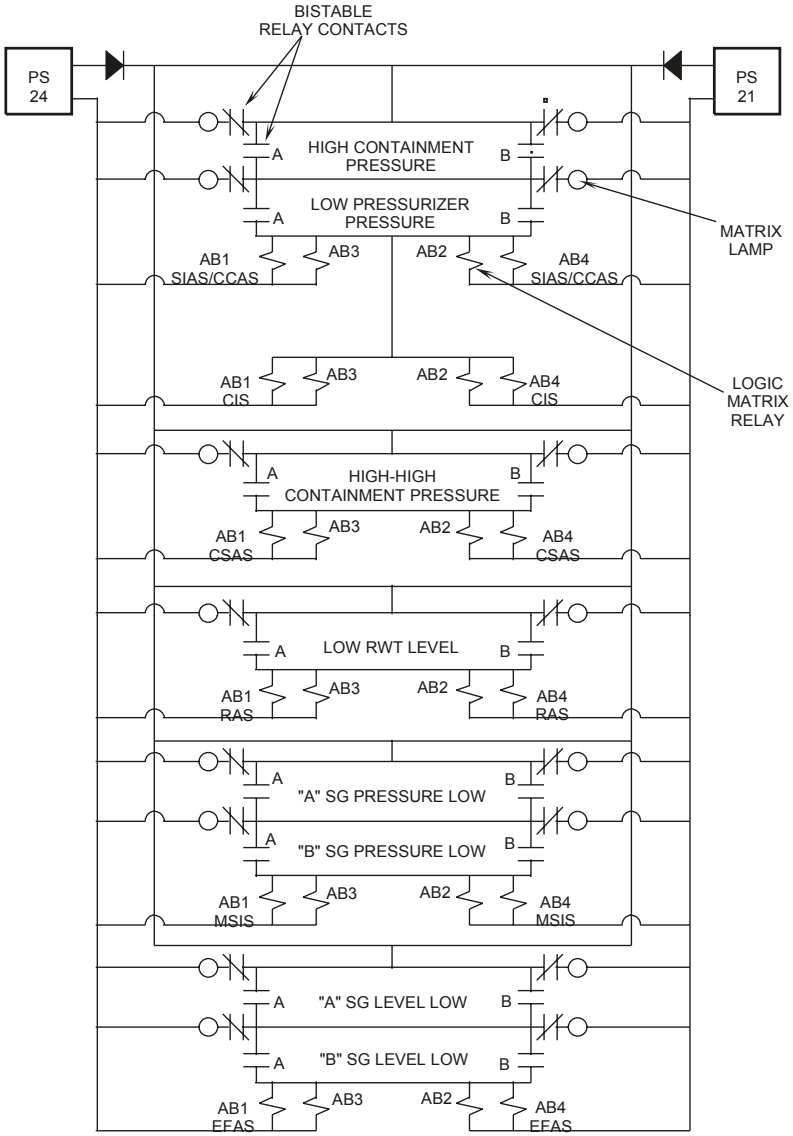

Figure 15-17 ESF Matrix

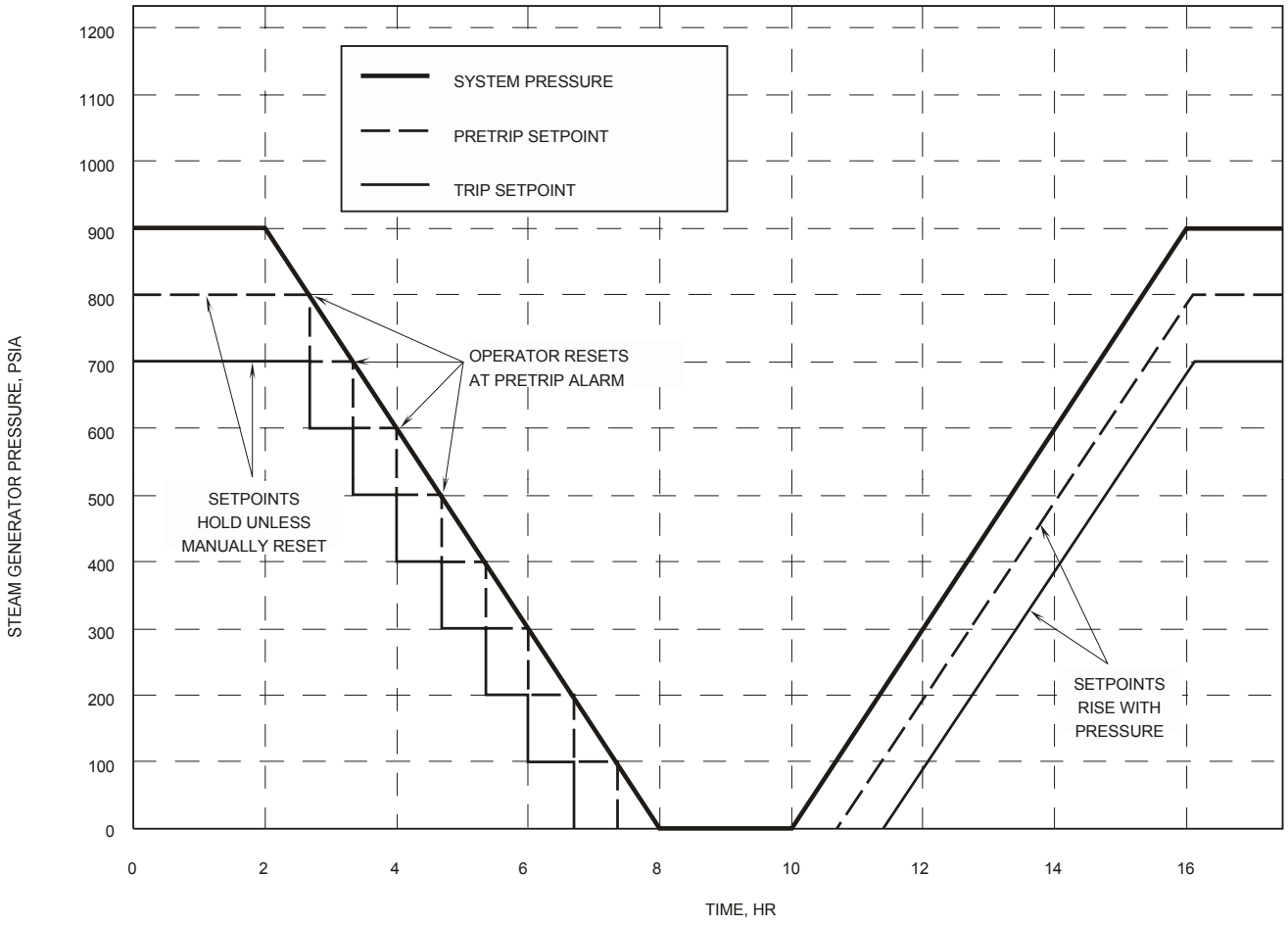

Figure 15-18 Steam Generator Variable Setpoint

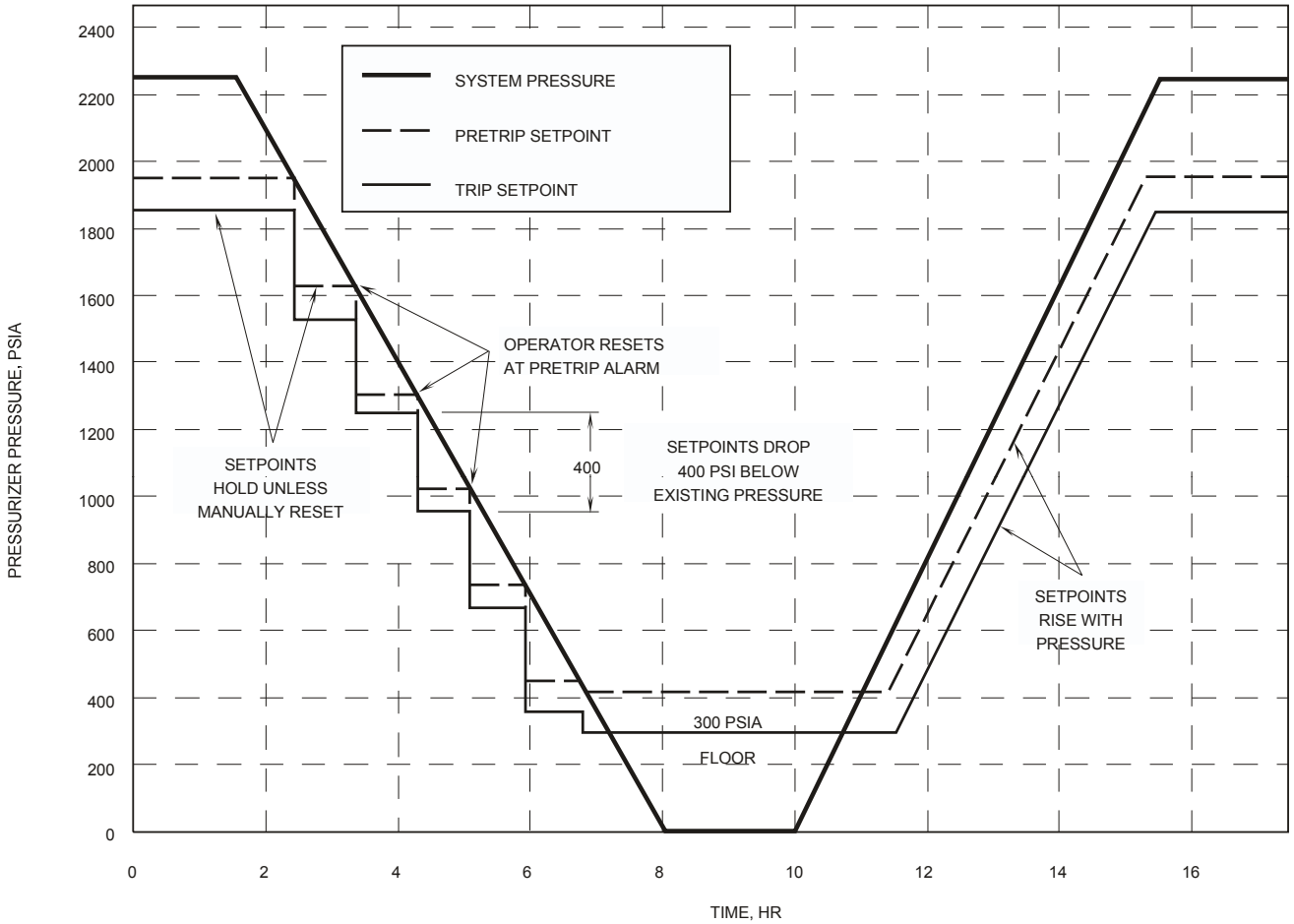

Figure 15-19 Pressurizer Pressure Variable Setpoint

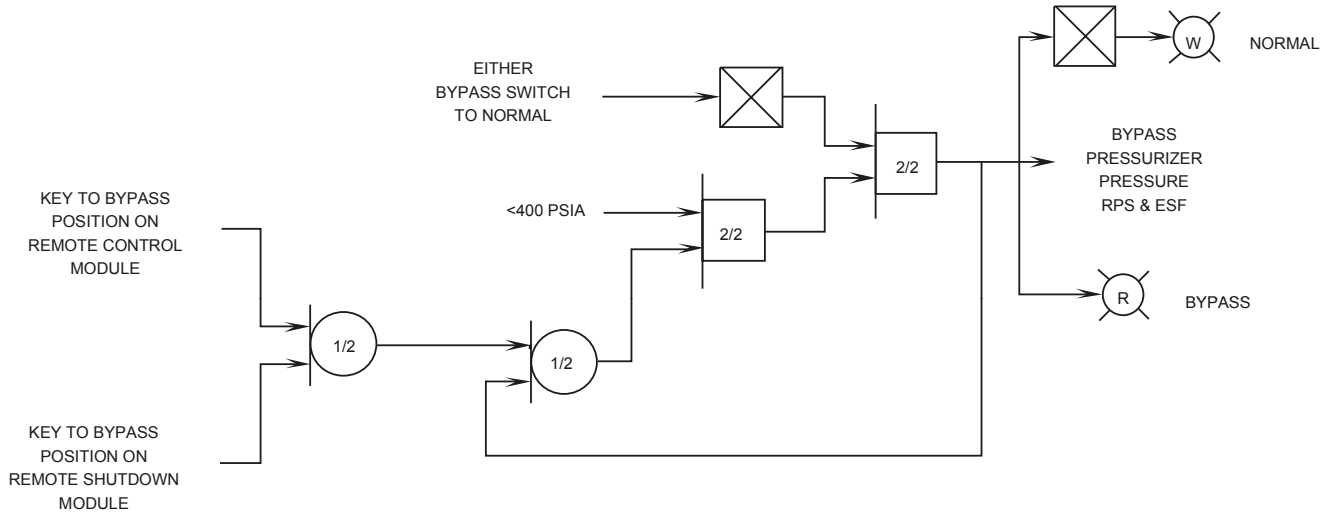

Figure 15-20 Pressurizer Pressure Bypass Logic

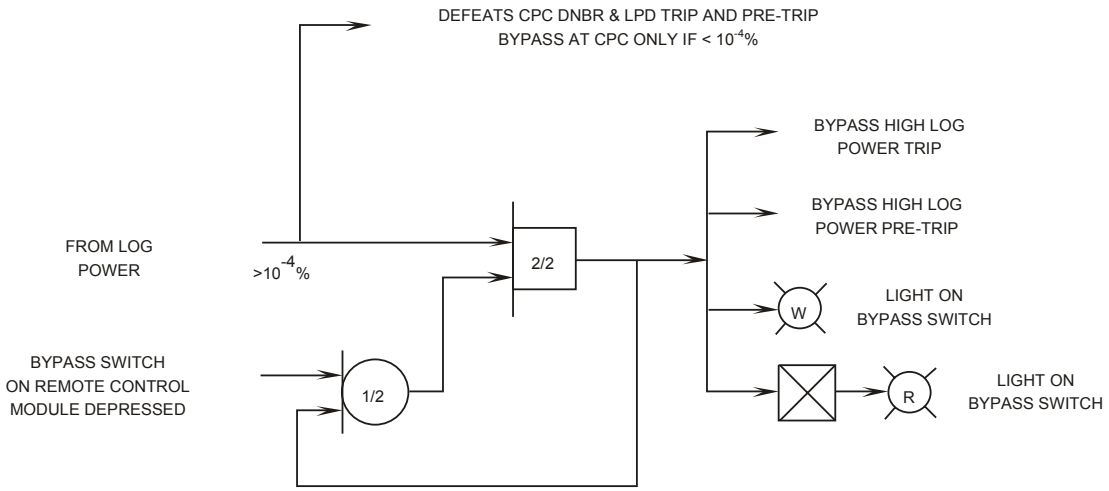

Figure 15-21 High Logarithmic Power Bypass Logic

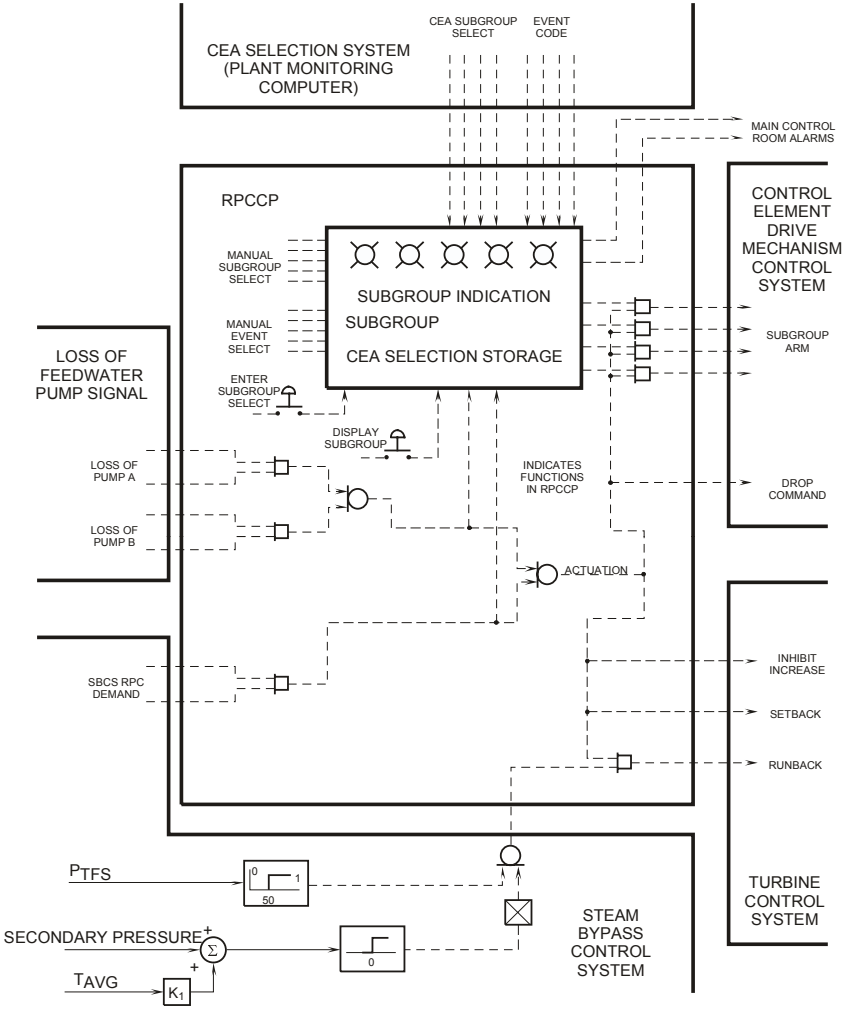

Figure 15-22 RPCS Functional Diagram

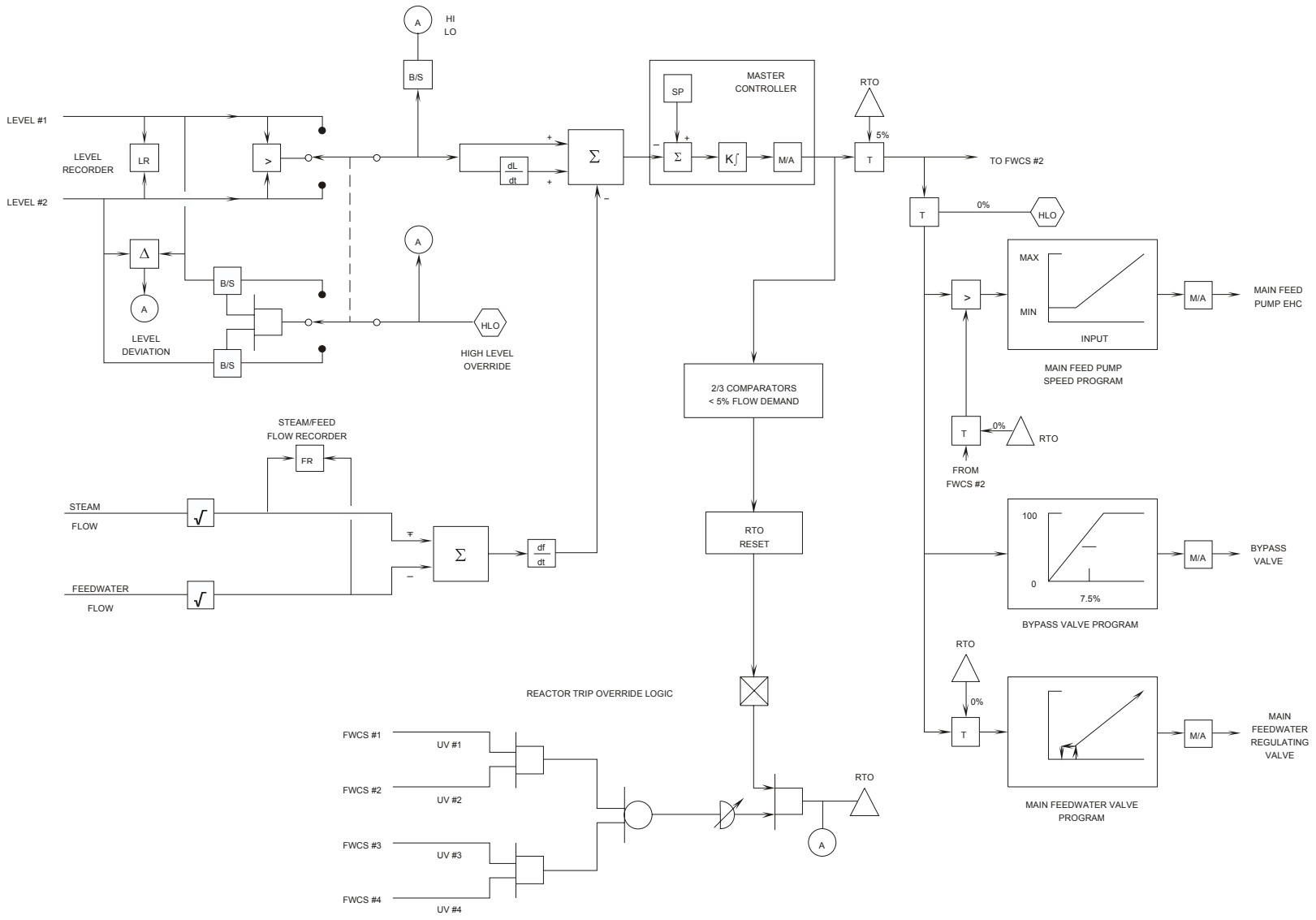

Figure 15-23 Feedwater Control System

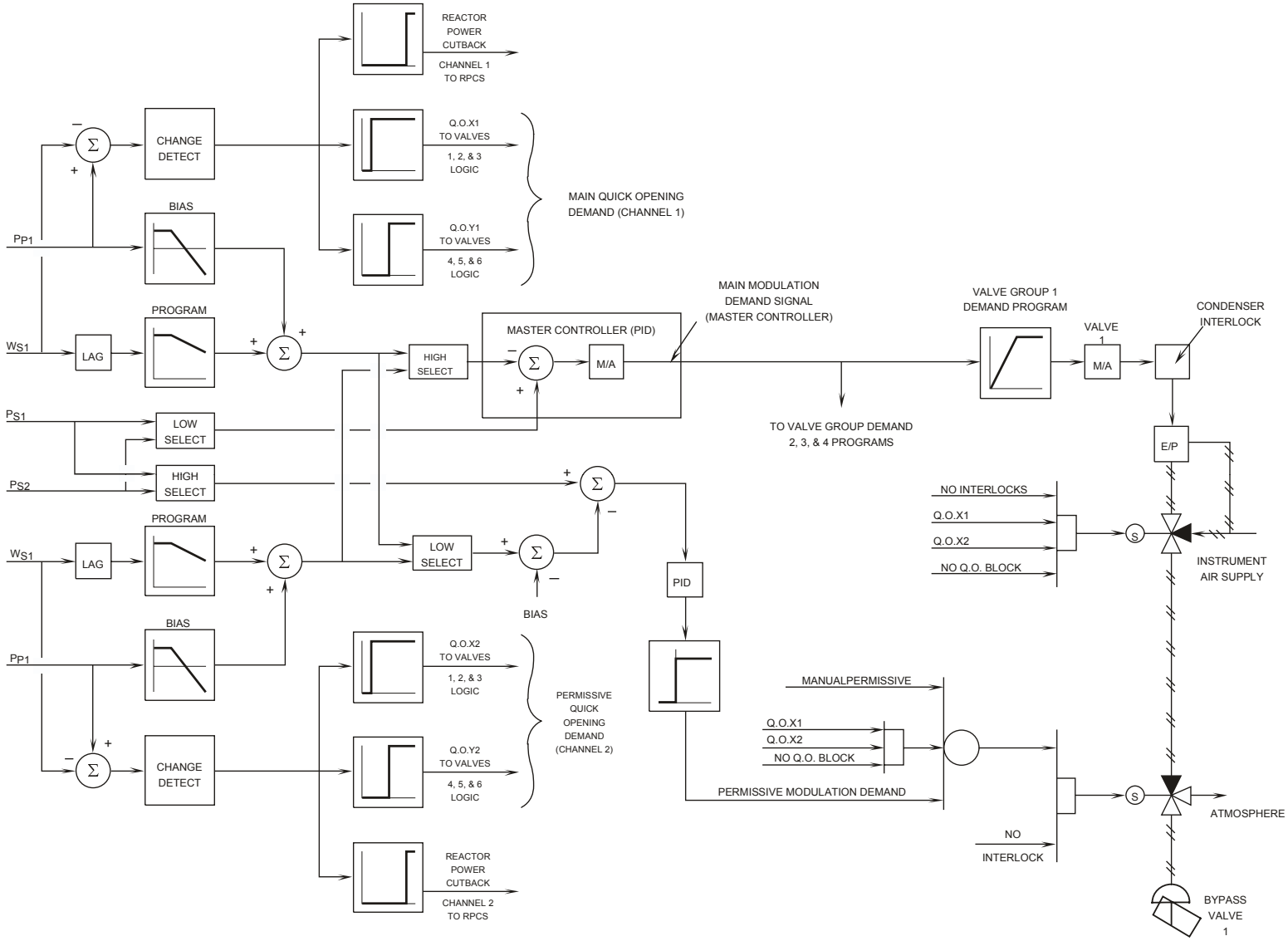

Figure 15-24 SBCS Simplified Functional Block Diagram

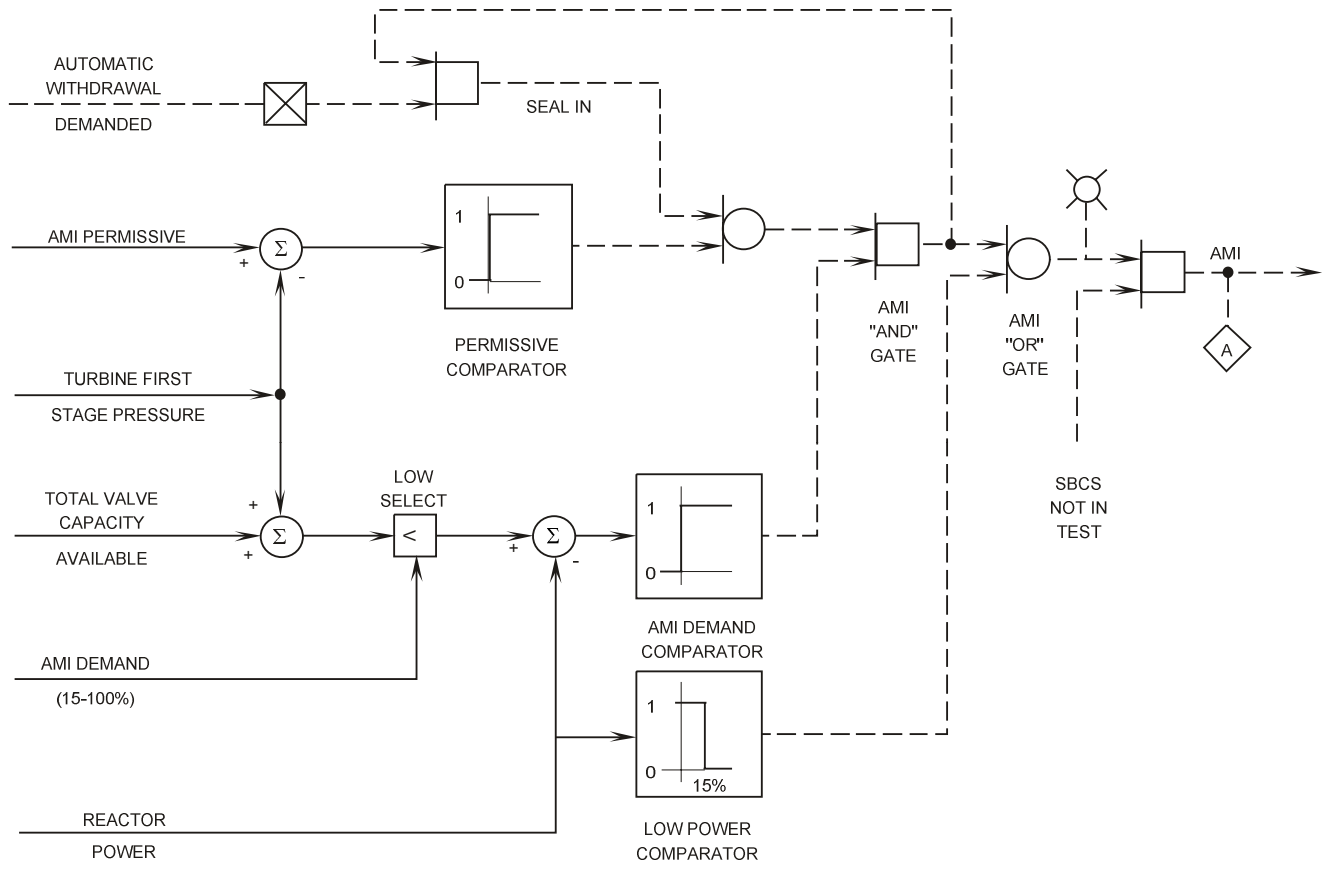

Figure 15-25 Automatic Motion Inhibit

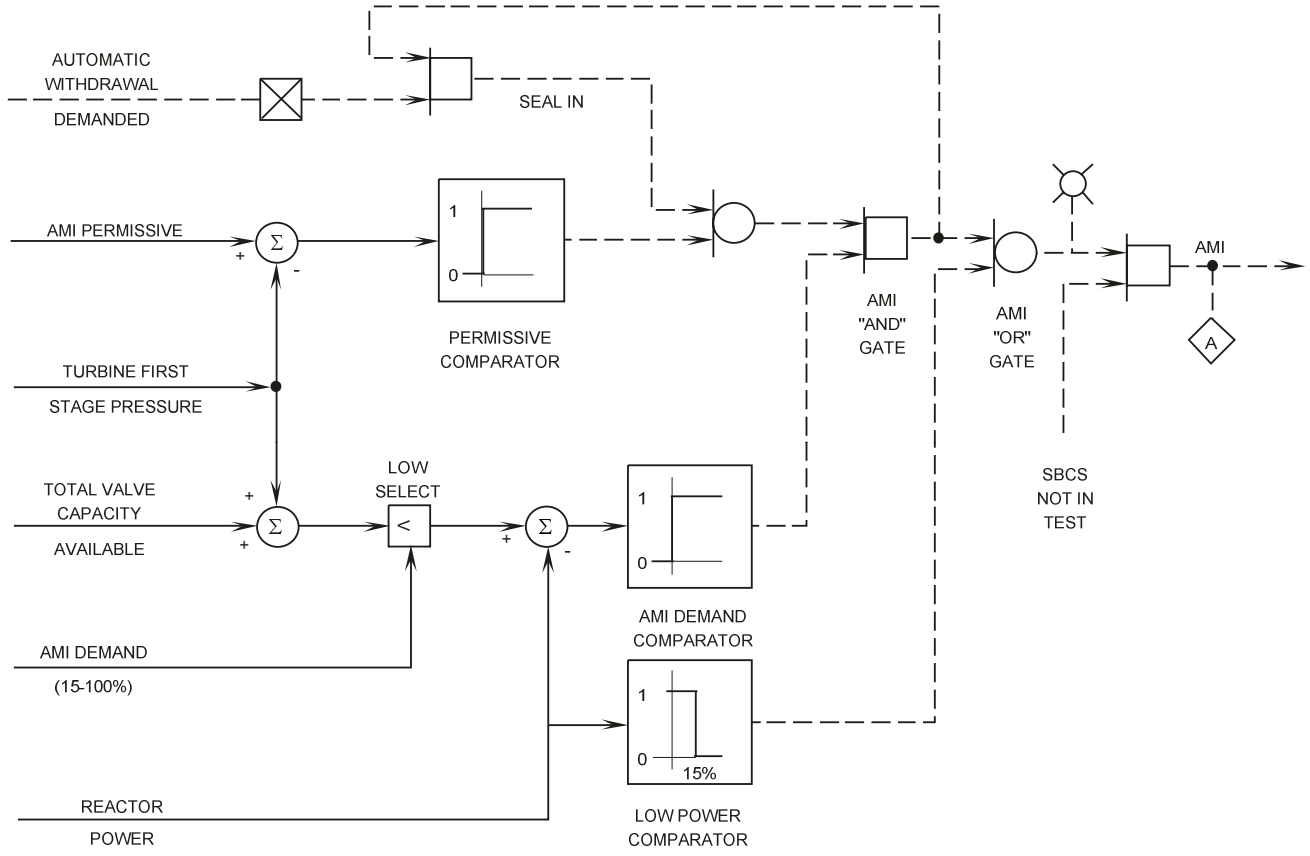

Figure 15-25 Automatic Motion Inhibit

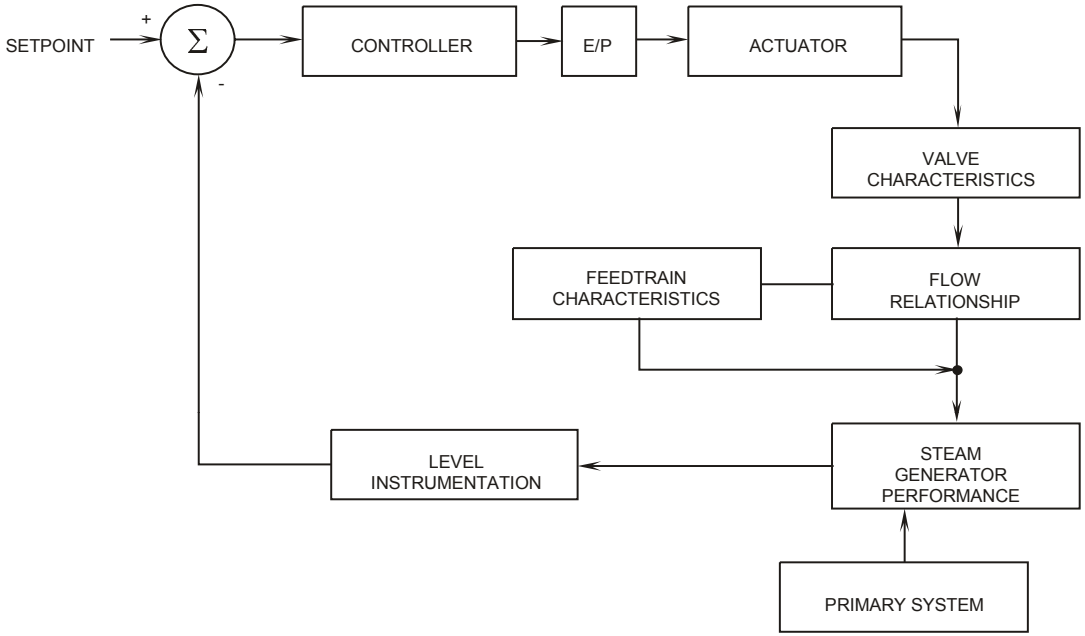

Figure 15-26 Feedwater Flow and Steam Generator Level Loop Block Diagram

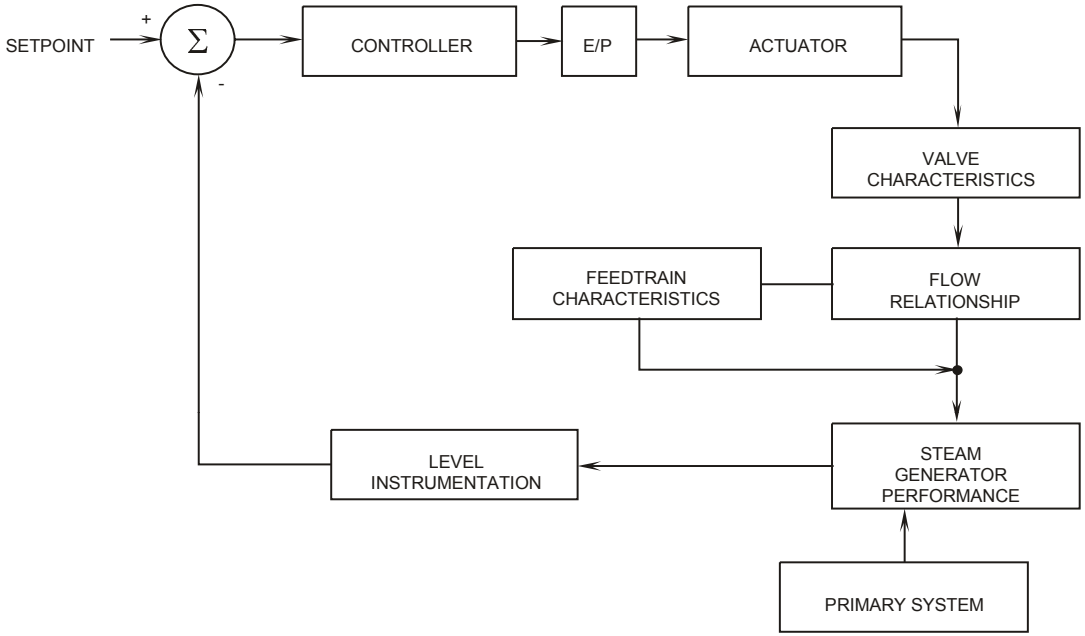

Figure 15-26 Feedwater Flow and Steam Generator Level Loop Block Diagram

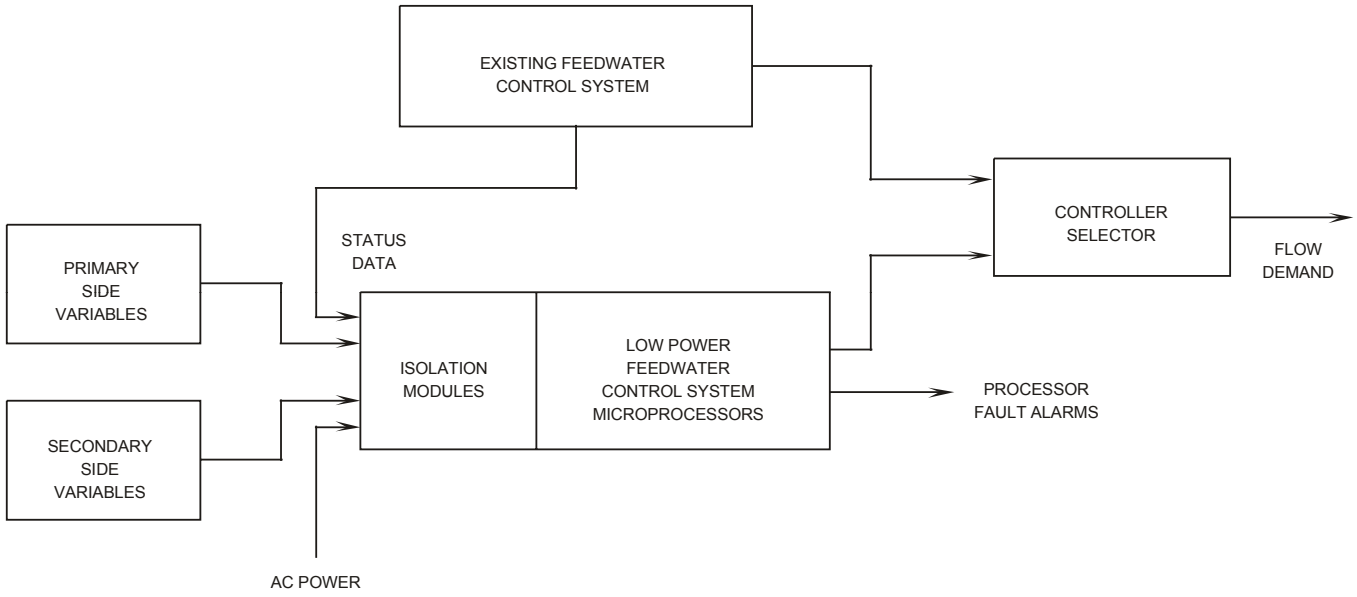

Figure 15-27 Low Power Feedwater Control System Block Diagram

The End