Core Operating Limit Supervisory System (COLSS)

Chapter 12.3

U.S.NRC
UNITED STATES NUCLEAR REGULATORY COMMISSION
Protecting People and the Environment

HRTD
Human Resources
Training & Development

Purpose of COLSS

- Monitor following LCOs
  - Azimuthal Tilt
  - LPD (Local Power Density)
  - DNBR
  - ASI
- and monitor compliance with Licensed Power Limit

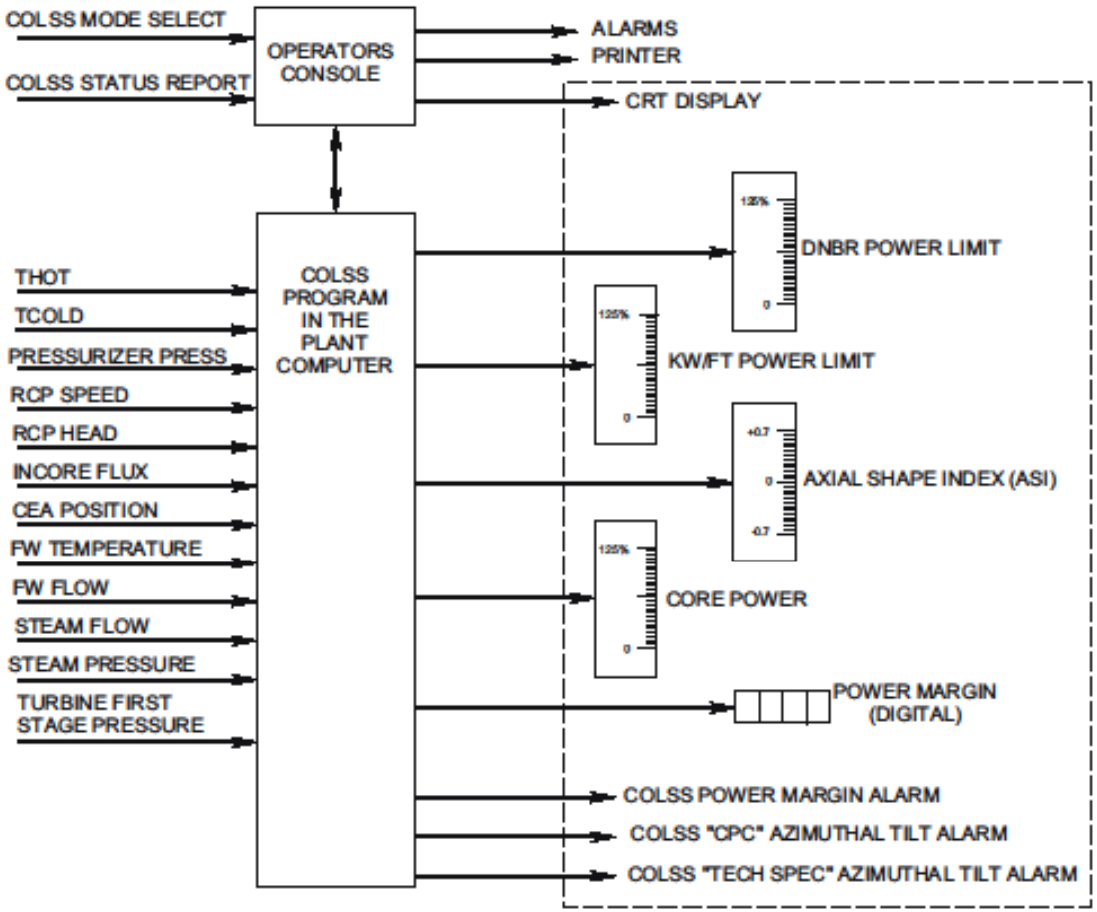

Figure 12.3-1 Core Operating Limit Supervisory Systems (COLSS)

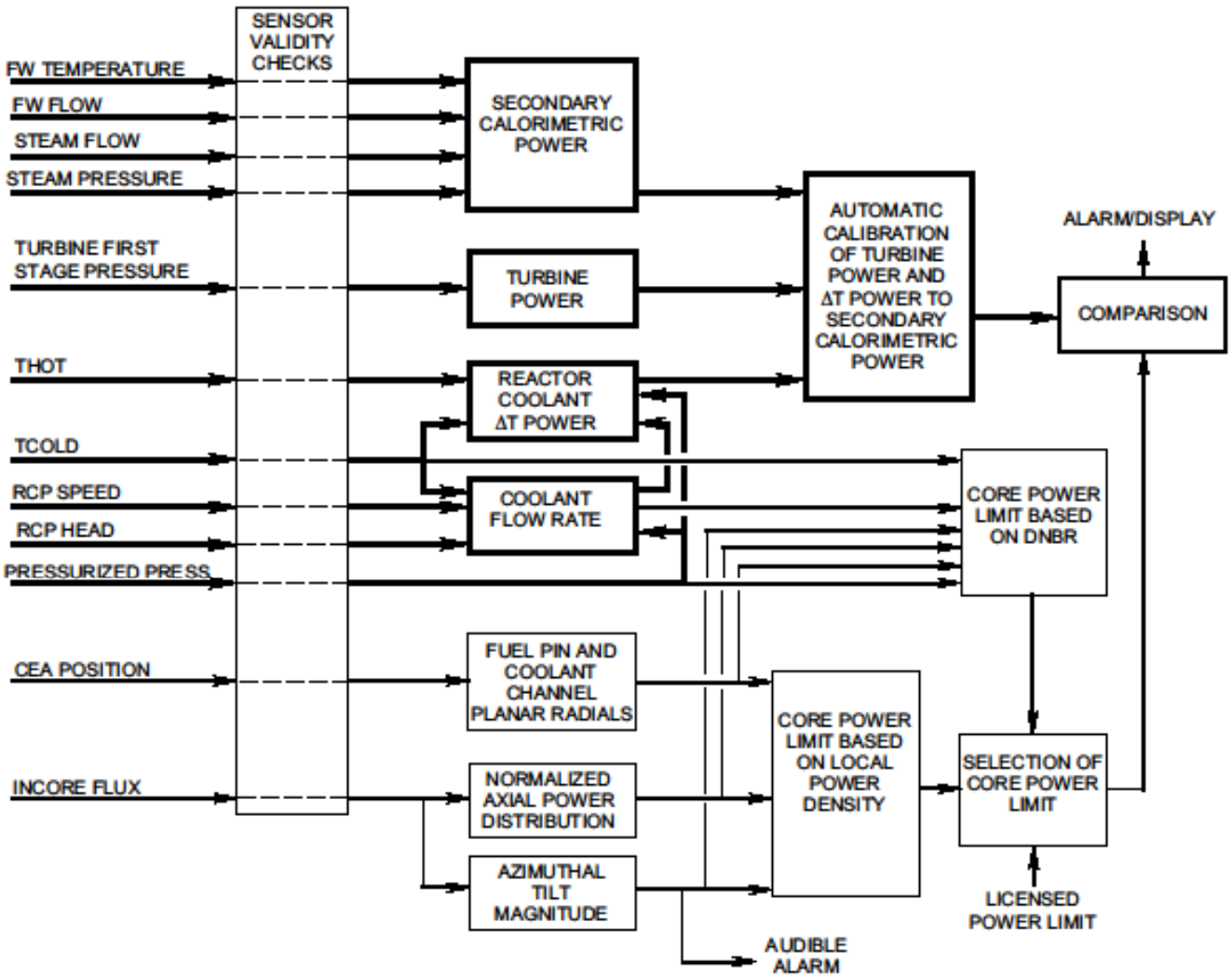

Figure 12.3-2 Functional Diagram of Core Operating Limit Supervisory Systems (COLSS)

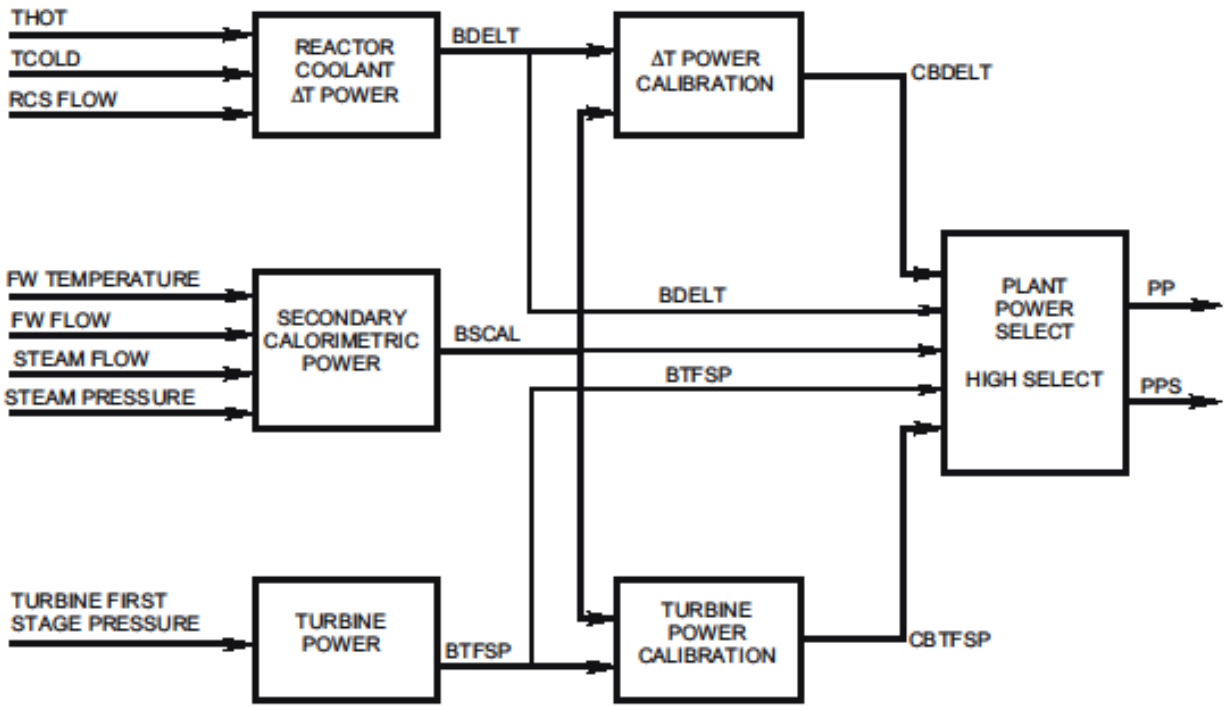

Figure 12.3-3 Power Calculations - Normal Power Operation Above 15%

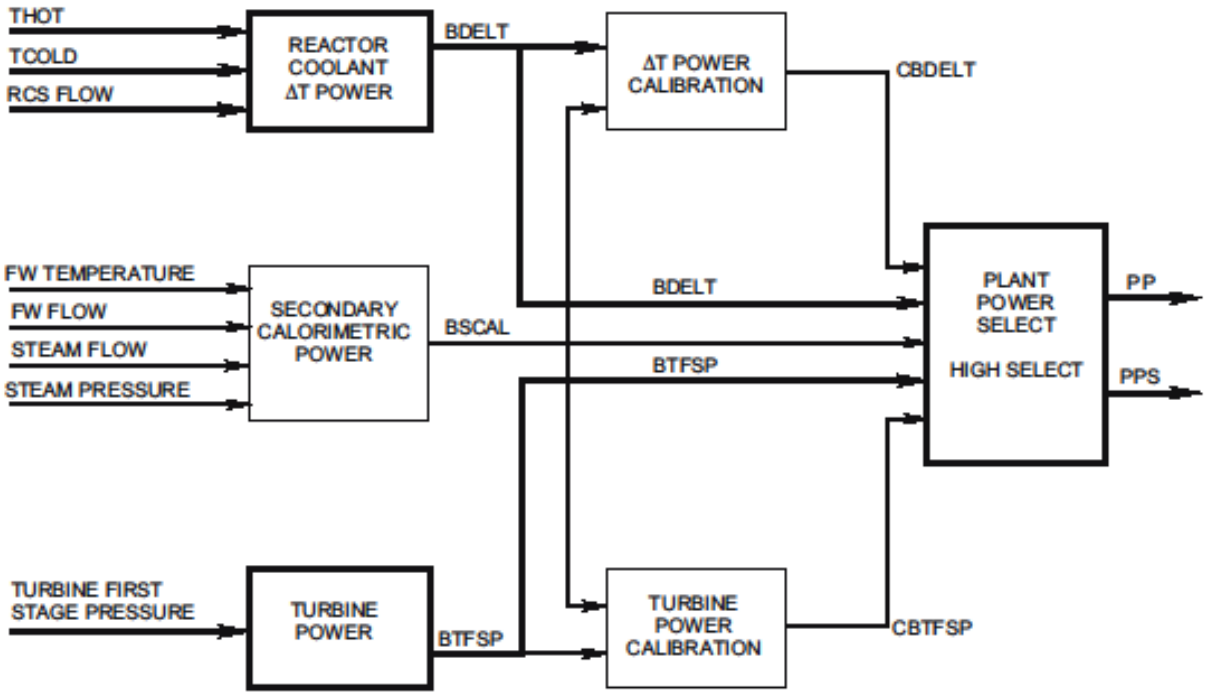

Figure 12.3-4 Power Calculations - Power Operation Below 15% or With BSCAL Bad

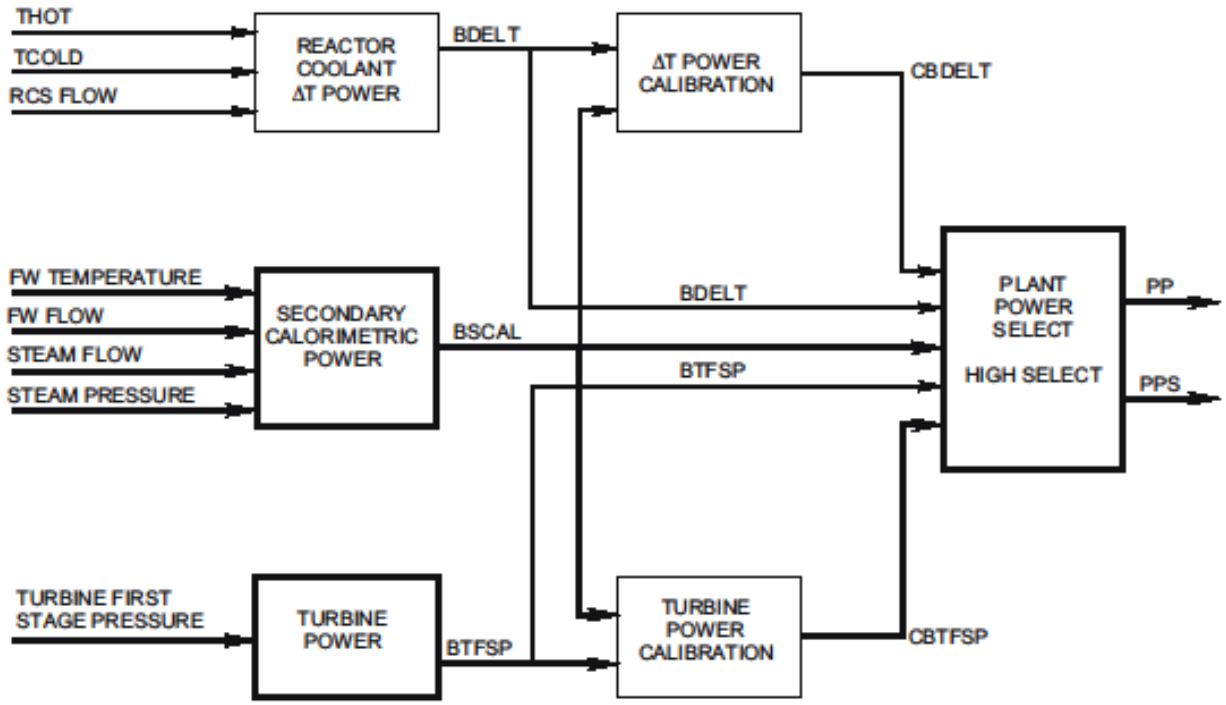

Figure 12.3-5 Power Calculations - Power Operation Above 15%, BDELT Bad

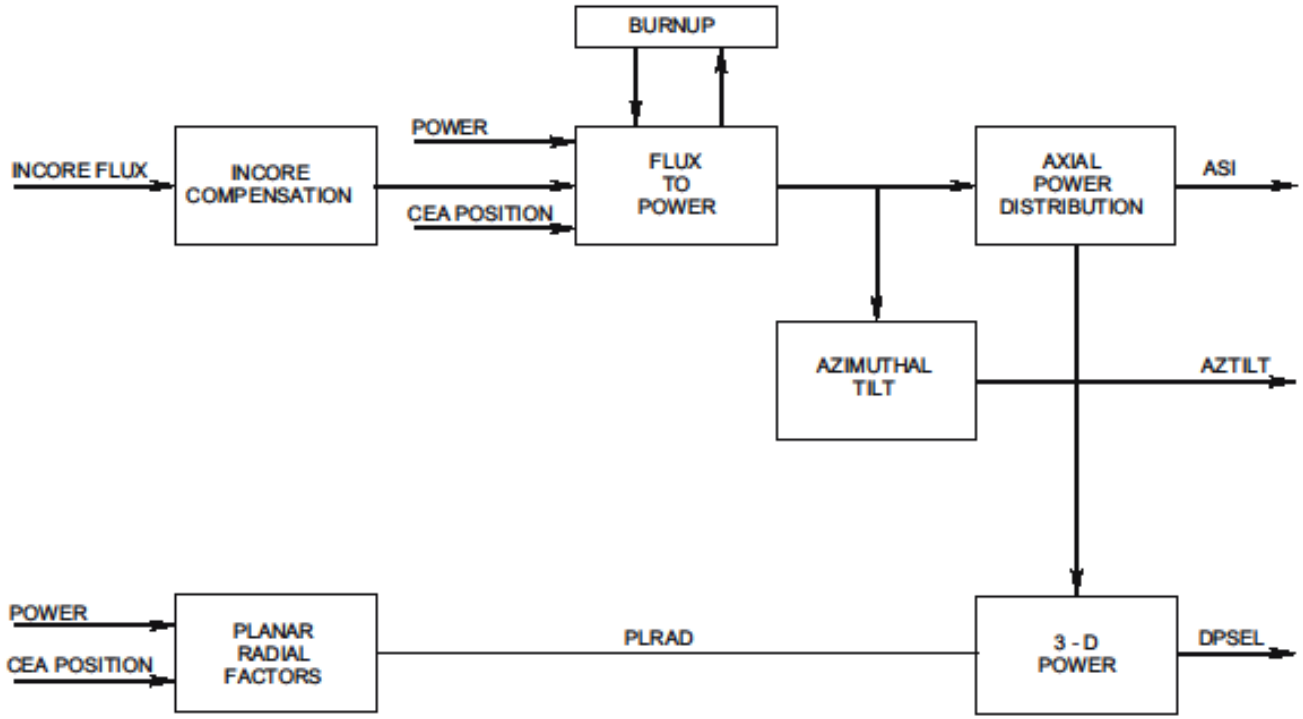

Figure 12.3-6 Power Distribution

The End