2.0 CIRCUIT BREAKER COMPONENTS and OPERATION

Learning Objectives

This chapter will provide a general overview of the mechanical components of a circuit breaker. A brief description of the components and their function will be provided along with a contrast between manufactures where applicable.

As a result of this lesson you will be able to:

1. Describe different breaker closing methods
2. Be able to recognize and describe the function of breaker mechanical components
3. Know the difference between the line and load side primary conductors
4. Understand how the breakers are inserted into the switchboard
5. Understand the difference between Primary and Secondary current carrying components
6. Understand the difference between main and arcing contacts
7. Understand the function of a puffer
8. Understand the operating sequence of an operating mechanism

2.1 CIRCUIT BREAKER OPERATION

Medium voltage breakers are designed to be operated electrically by a closing solenoid or a stored energy mechanism. Manual operation is used primarily for breaker maintenance.

2.1.1 Manual operation

Only low voltage circuit breakers (600V and under) are designed with manual operation as their primary method of closing and tripping.

2.1.1.1 Manual breakers are closed by operating a handle on the front of the breaker, which will prime a closing spring, which closes the breaker contacts or may move the contacts to a closed position via an operating linkage.

2.1.1.2 Medium voltage breaker manual operation

Manual operation is primarily for maintenance and is performed by compressing the closing spring with a manual closing spring charging device, closing and tripping mechanisms are normally dual operating and manual closing and tripping operation is performed from the breaker front plate.

2.1.2 Electrical operation

2.1.2.1 Solenoid operated:

The first electrically operated breakers were closed by a solenoid close coil. The coil pulled a solenoid slug, which actuated the closing mechanism. Figures 2-1 and 2-2 show the first generation Westinghouse DHP circuit breaker with a solenoid-closing coil. Solenoid closing operation was replaced by stored energy breakers.

2.1.2.2 Stored energy closing:

Stored energy design breakers utilize a charging motor to charge a closing spring to a primed position ready to close. A closing coil or manual close button unlatches the closing spring holding latch, which discharges the spring closing the breaker contacts.

2.2 MAIN CURRENT CARRYING COMPONENTS

The complete current carrying assembly is called a phase or pole. Medium voltage breakers are primarily used in Alternating Current (AC) applications, but there are some Direct Current (DC) applications.

Alternating current (AC) breakers have three phases and are normally designated as A, B, and C phase, looking at the front of the breaker and going left to right.

Direct Current (DC) breakers are usually used in low voltage applications and normally are two Pole design. There are also applications in the mining and rail industries, which use single-pole DC breakers.

The phase or pole design in all breakers is essentially the same and will consist of some or all of the following components.

1) Primary disconnects.
2) Primary conductors (Bushing)
3) Moving contact arm
4) Contacts
5) Puffer device

2.2.1 Primary Disconnects

The circuit breaker “plugs into” the switchboard compartment using a primary disconnect (Main Current Carrying) and secondary disconnect (Control Power).

The primary disconnects connect the breaker phase to the switchboard side bus. The primary disconnects are a set of silver plated copper fingers held together with springs and are permanently mounted to the breaker bushings (Figure 2-3). On some breaker designs such as a GE Magne-Blast (Figure 2-4) the bushing is a silver plated copper stud and the primary disconnects are permanently attached to the to switchboard side conductor.

The disconnect is designed to float, which means they are not rigidly mounted, and allows for any minor misalignment of the breaker to cubicle. The opening on the disconnect is wider on the outside and tapers smaller at the point where the breaker is fully racked into the connected position.

The primary disconnect does not exert full spring tension on the bus when out of the cubicle, only when inserted into the cubicle. The switchboard side conductor expands the fingers and causes the springs to exert pressure on both the breaker and cubicle pole.

As the breaker is racked into the cubicle the primary will be in line with the switchboard side conductor and self aligns as the breaker is moving to the connect position. The fingers of the primary disconnects are also coated with a lubrication to allow for a smooth insertion and also to protect the silver-plating from friction wear.

2.2.2 Primary Conductor

The primary conductor, also referred to as a bushing, is a solid copper bus with silver-plating on both ends. Some manufactures also braise a thin silver coating at the moving contact pivot or connection surface for better conductivity. Each conductor is covered with or encased in an insulating material to isolate it from the breaker frame.

Each phase will have a “Line” side and a “Load” side bushing. The load Side bushing is normally attached to the moving contact arm and the line side is normally the stationary contact. An exception to this is a Bus Tie Breaker, which can feed from both bushings depending on which side of the switchboard it, is feeding.

2.2.3 Moving Contact Arm

The moving contact arm is silver plated copper and connects to the primary bushing at a pivot point on the load side primary conductor. The arms are held by a bolt and nut assembly, which exerts a set tension on a spring or springs to provide pressure for a good electrical connection.

The moving contacts are attached to one end of the contact arm and the other end is connected to an insulated push link that connects the moving arm to the operating mechanism.

2.2.4 Contacts

- Air Circuit Breakers (ACB): The contact assembly of most medium voltage ACB’s consists of two contact types: main contacts and arcing contacts.
  - Arcing Contacts: During the close operation of the breaker, the arc contact touches first and when tripped (opened) break last. The arcing contacts are designed to be strong enough to withstand the heat of the arc, and are normally a silver tungsten alloy. Arc contacts are considered sacrificial and it is not unusual to have minor burning and arcing damage. The silver provides some current carrying characteristics, but the tungsten is not a good conductor. Therefore, arc contacts cannot carry the normal breaker loads.

- Main Contacts: The main contacts carry the breaker load. Air circuit breaker main contacts are normally a silver plated copper body with a silver cadmium oxide contact material attached at the connection point of the moving and the stationary contacts.

  Pure silver or silver plated copper could not withstand the force of opening and closing the breaker, and therefore the contact tip is a silver alloy; silver cadmium oxide is commonly used for this application because it is a good conductor and adds enough strength to minimize the wear from the opening and closing impact.

  The contact surfaces of the arcing and main contacts are not silver-plated. The plating deposited during the plating process is removed, as it would burn off during arcing.

- Vacuum Breakers: There are only main contacts within a vacuum bottle. The commonly used materials for vacuum breakers are either copper-bismuth or copper-chrome alloys. The shape is also important and two basic shapes are used cupped axial magnetic design and a slotted design. Figure 2-5 shows the slotted design.

- SF6 Gas Breakers: Have a main and arcing contact design similar to ACB's.

2.2.5 Puffer Device

A puffer device is used in most medium voltage air breakers to help accelerate the arc into the arc chute. The puffer will have a tube positioned under the stationary contacts and uses the movement of the mechanism or contact arm to displace air from a chamber on the breaker into the arc path.

2.3 CLOSING SHAFT AND CONNECTING LINKS

The closing shaft is the device that connects the operating mechanism to the insulated links that operate the moving contacts. The closing shaft has different names depending on the breaker manufacturer:

- General Electric refers to it as "crank shaft "and "Jack shaft",
- Westinghouse/Cutler Hammer a "Pole Operating Shaft", (See Figure 1-2, Item 2)

- ABB calls it a “Jack shaft” and the on the new vacuum breakers it is called a “Main Shaft”. (See Figure 2- 6, Item 12)

The closing shaft has three-connection pivot points where the phase insulated links are connected. The operating mechanism driving link is also connected to the operating shaft under the center phase.

2.4 OPERATING MECHANISM

All stored energy breakers operate on the same principle. Before discussing the operating mechanism the following are common terms used for mechanism components:

- Closing arms/lever or closing cranks: The arms attached to the closing shaft.
- Trip Latch: The latch, which rests on the trip latch roller when the breaker is closed. Trips the breaker when closed.
- Trip Latch Roller: Roller that rests on the trip latch.
- Closing Roller: The roller on the mechanism linkage. The closing roller rides on the closing cam during the close operation.
- Closing Cam: The closing cam is a drop cam shape design and pushes the breaker linkage to the close position.
- Prop Latch (DHP = Tripping cam): Latch used to hold the mechanism in the closed position after closing to allow the mechanism to recharge.

2.4.1 Breaker operating sequence:

See Figure 2-7 and 2-8 for mechanism position.

- A charging motor or manual charge handle operates the charging crank and pushes a ratchet wheel to compress the closing spring. When the breaker reaches the charged position and the closing latch is holding the closing spring in a fully compressed position (Figure 2-8 Item 2 and 5).

- The trip latch will now be in a position to hold the mechanism in a closed position when the close operation is initiated. (Figure 2-6b Item 10 and 18)

- When the close latch is moved the closing spring will drive a closing cam and engages the closing mechanism linkage, the mechanism linkage is attached to the operating shaft, which in turn is attached to the moving contacts, and the breaker will close. (Figure 2-7c)

- For the breaker to remain in the closed position the linkage has to be held in a closed position by the trip latch.

- To allow the breaker to recharge and remain closed the breaker will use a prop latch (DHP = Tripping Cam) in conjunction with the trip latch to hold the mechanism in a closed position. This will allow the mechanism to recharge. (Figure 2-8d)

- To trip the breaker the trip latch is moved allowing the mechanism toggles to collapse.

2.5 BREAKER SPRINGS

2.5.1 Closing Spring

The closing spring provide the energy to close the contacts and is the largest spring on any stored energy breaker. It is sized according to the continuous amperage and interrupting amperage of the breaker. There can be one or two closing springs depending on the type and size of the breaker.

2.5.2 Opening springs

The opening spring or springs open the breaker during a trip operation. The quantity and size of the opening springs will depend on the interrupting requirements of the circuit breaker. Opening springs are normally located on the outside phases and are attached to the closing shaft.

The springs are compressed or stretched during the close operation and remain stretched until a close signal is given to the breaker. Most breakers have two large springs but some breakers will have more.

2.5.3 Contact Springs

The contact springs (Arcing and Main) provide the pressure required to give a tight connection between the moving and stationary contacts. The main contact springs are normally located on the stationary main contacts and are compressed when the contacts are closed. The arcing contact springs can be on the stationary or moving contacts and also are compressed when the contacts are closed.

2.5.4 Mechanism Springs

The operating mechanism has several springs associated with latch actuation and resetting operations. Significant springs normally found in all mechanisms are:

- Trip Latch Spring: Resets and holds trip latch in position.
- Close Latch Spring: Resets and holds close latch in position.
- Prop Latch Spring: Pulls the prop on to latch.

2.6 RACKING MECHANISM

A racking mechanism or levering system is used to insert and remove the circuit breaker from the circuit breaker compartment.
Most breakers use a mechanism mounted on the breaker and rack the breaker into position horizontally. The GE Magna-Blast Model AM is the only breaker that has its racking mechanism in the switchboard cubicle and racks the breaker into position vertically.

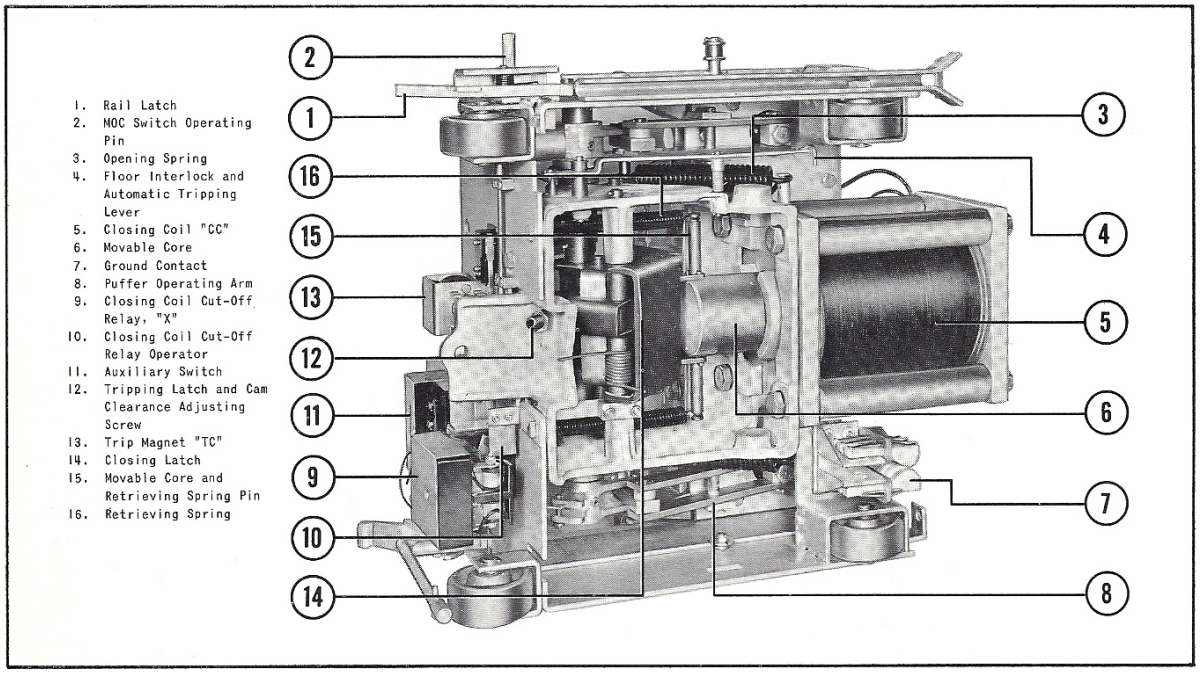

Figure 2-1 Solenoid operated DHP Breaker

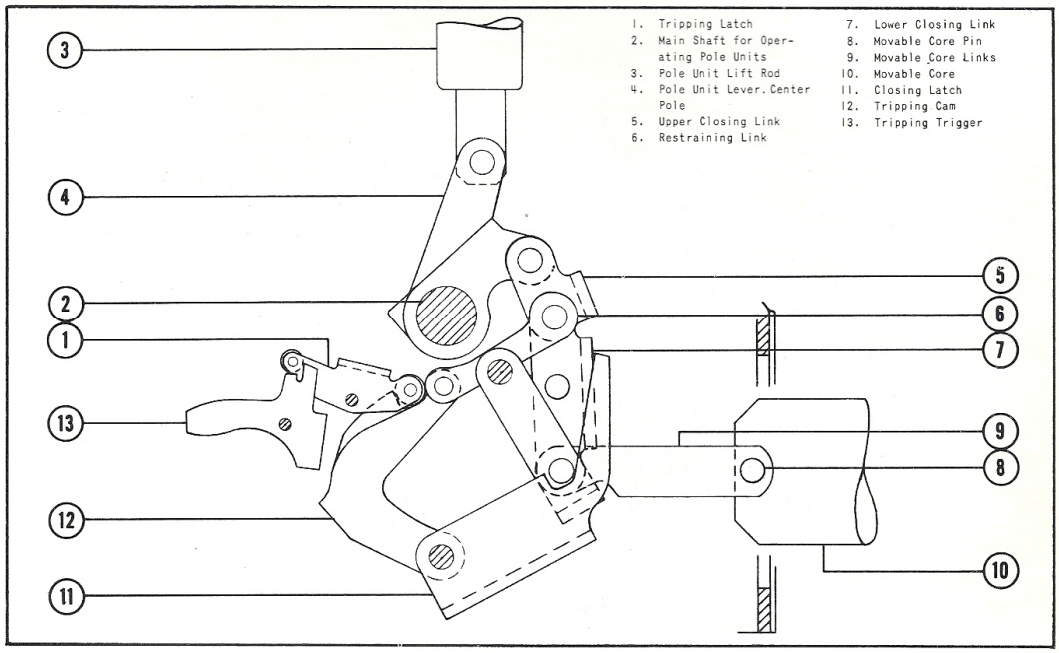

Figure 2-2 Sketch Solenoid operated DHP Breaker

Figure 2-3 HK Primary

Figure 2-4 Magne-Blast Primary

Figure 2-5 vacuum bottle contacts / slotted design

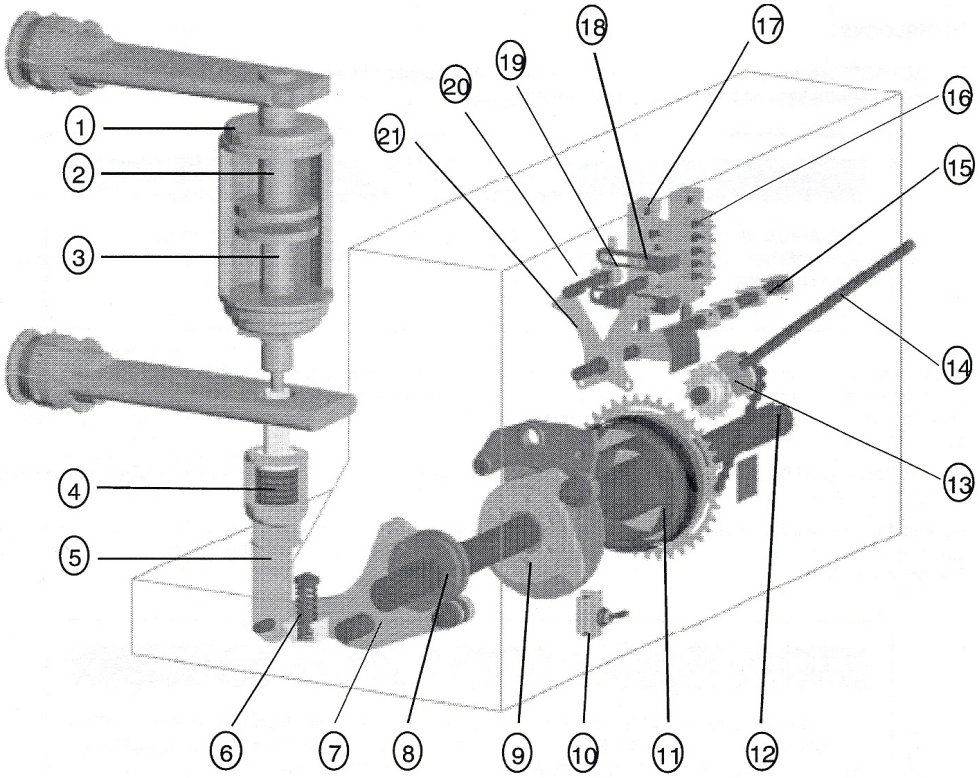

#	DESCRIPTION	#	DESCRIPTION
1	VACUUM INTERRUPTER	12	MAIN SHAFT
2	STATIONARY CONTACT	13	CHARGING PAWL
3	MOVING CONTACT	14	CHARING HANDLE
4	CONTACT SPRINGS	15	AUXILIARY SHAFT
5	PUSH ROD	16	AUXILIARY CONTACT
6	OPENING SPRING	17	MOTOR LIMIT SWITCH
7	ROCKER ARM	18	CLOSE PUSH BUTTON
8	CAM	19	HALF SHAFTS (2)
9	STOP DISK	20	CLOSING TRIGGER
10	MOTOR DISCONNECT SWITCH	21	OPENING TRIGGER
11	CLOSING SPRING		

Figure 2-6 / ABB Vacuum breaker Operating Mechanism

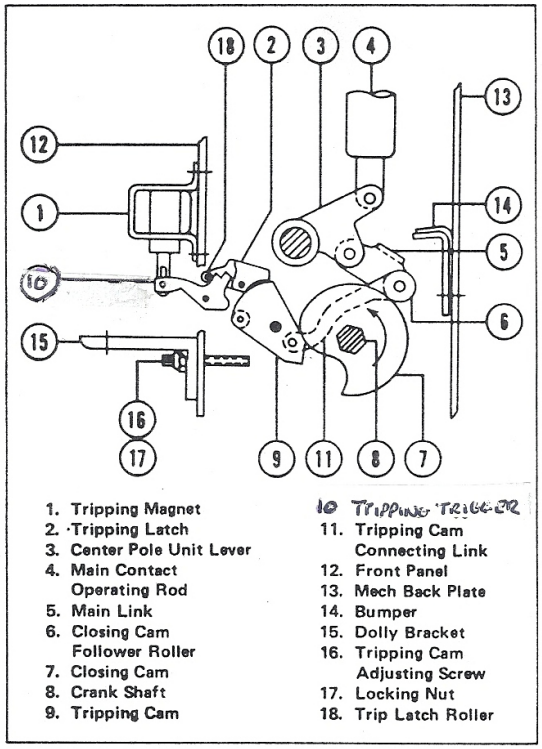

a. Breaker Open and Closing Spring Not Charged

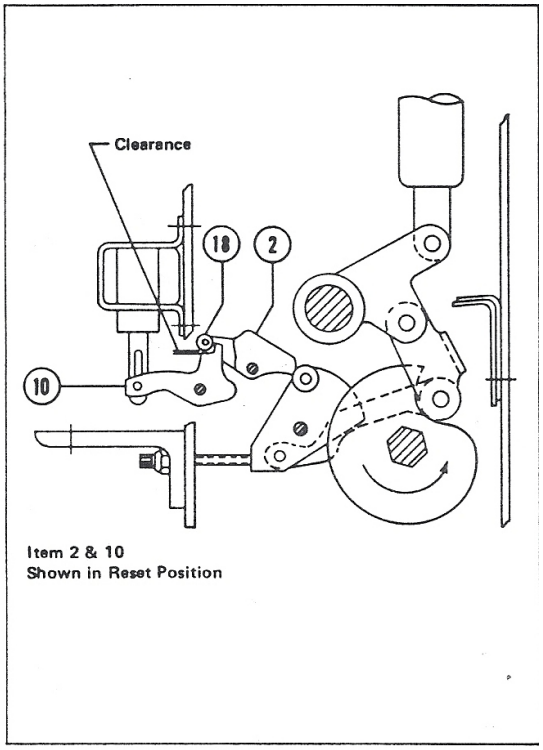

b. Breaker Open and Closing Spring Charged

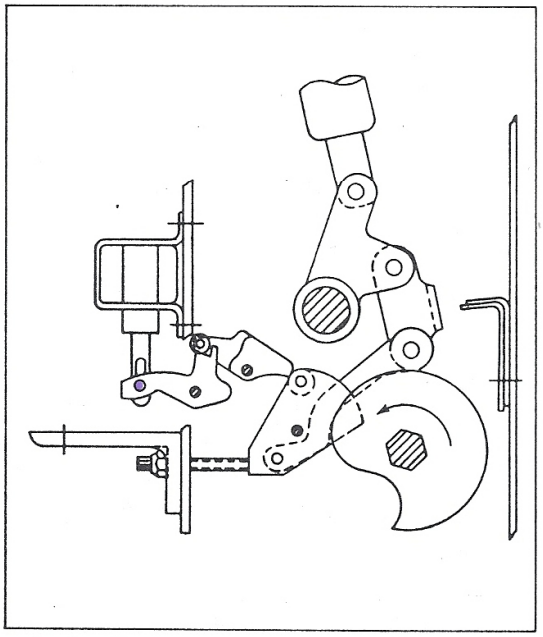

c. Breaker Closed and Closing Spring Not Charged

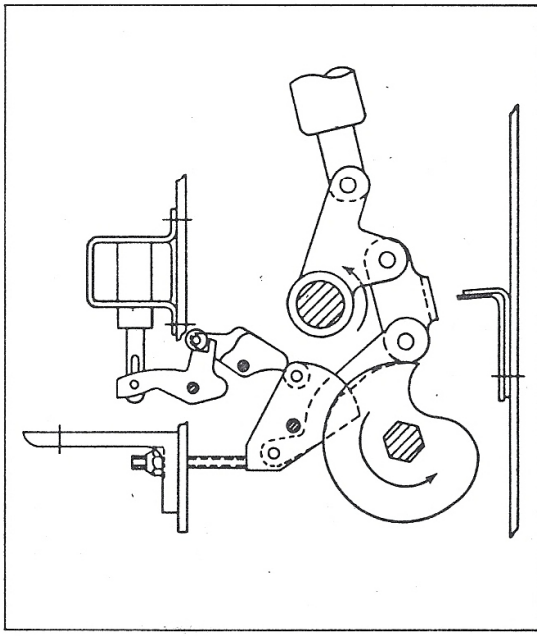

d. Breaker Closed and Closing Spring Charged

Figure 2-7 DHP Operating Mechanism sequence

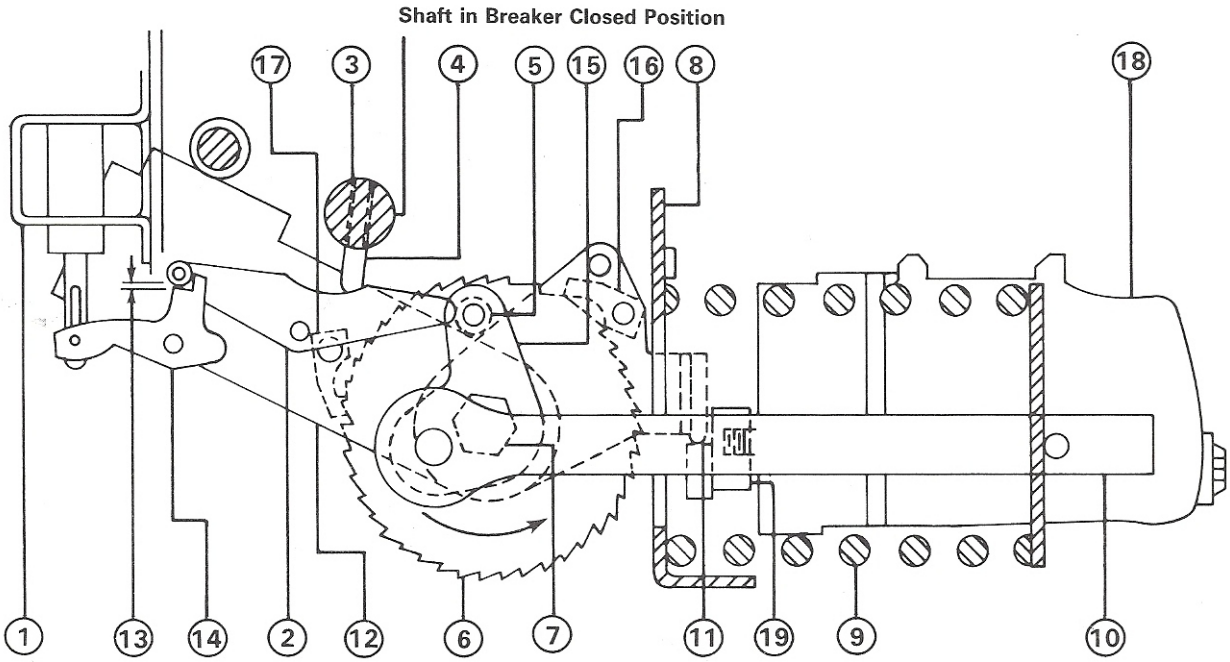

1. Spring Release Magnet and Coil
2. Closing Latch
3. Pole Unit Operating Shaft
4. Anti-Close Interlock Screw
5. Closing Stop Roller
6. Ratchet Wheel
7. Crank Shaft
8. Mechanism Frame
9. Closing Spring
10. Connecting Rod
11. Driving Plate and Motor Ratchet Lever Assembly
12. Manual Ratchet Lever and Holding Pawl Assembly
13. Clearance .010 to .030, Breaker Closed
14. Closing Trigger
15. Main Crank
16. Driving Pawl
17. Holding Pawl
18. Motor
19. Crank Assembly

Figure 2-8 DHP Operating Mechanism spring charged