U.S.NRC
UNITED STATES NUCLEAR REGULATORY COMMISSION
Protecting People and the Environment

PLANT COMPUTER SYSTEM

Section 18.0

HRTD
Human Resources
Training & Development

Objectives

1. State the purpose of the Plant Computer.

2. Given a list of application programs, state the purpose of each application.

Objectives (Cont.)

3. State the purpose of the Safety Parameter Display System (SPDS).

4. List The Critical Safety Functions (CSF) monitored by the SPDS.

POST TRIP REVIEW

N0049A	N0050A	N0051A	N0031A	TIME 1	P0038A	P0039A	C0045A	T0043A	TIME 2
95.80	96.45	96.62	96.16	3252.4	422.7	423.1	929.2	571.1	3251.9
95.86	96.56	96.62	96.16	3254.2	183.2	117.2	391.1	551.9	3254.2
95.80	96.68	96.74	96.27	3256.4	92.4	95.8	321.9	551.9	3251.9
96.72	98.01	97.65	96.98	3258.3	73.2	73.6	112.4	551.7	3251.4

POST-TRIP DATA-TRIP TIME 183258

4.69	4.75	4.69	4.63	3388.5	79.8	82.4	4.4	551.9	3383.9
3.81	3.93	3.87	3.79	3382.4	81.5	84.1	-4.0	551.9	3382.4
3.53	3.58	3.53	3.05	3384.4	81.5	83.7	-4.0	552.8	3384.4
2.41	2.46	2.41	2.34	3388.4	83.2	82.8	-4.0	551.8	3381.4

N0031A	N0032A	N0036A	N0036A	N0041A	H0042A	H0043A	H0044A	N0045A	N0046A	N0047A	N0048A	N0049A	N0050A	N0051A
0.03	0.03	195.04	342.11	3.60	4.03	3.61	3.99	3.64	4.03	3.66	4.00	95.92	96.68	96.60
0.03	0.03	199.61	348.11	3.59	4.03	3.60	3.98	3.63	4.02	3.66	4.01	95.88	96.51	96.62
0.03	0.03	196.92	345.98	3.58	4.02	3.60	3.98	3.63	4.01	3.66	4.00	95.57	96.58	96.62
0.03	0.03	196.92	345.98	3.59	4.03	3.61	3.98	3.63	4.01	3.65	3.95	95.88	96.74	96.56
0.03	0.03	192.31	342.88	3.60	4.03	3.59	3.97	3.64	4.03	3.65	4.00	95.88	96.39	96.60
0.03	0.03	199.61	342.88	3.59	4.02	3.60	3.98	3.63	4.02	3.66	4.00	95.63	96.62	96.68
0.03	0.03	199.61	339.81	3.60	4.03	3.60	3.98	3.63	4.01	3.66	3.95	95.88	96.51	96.54
0.03	0.03	195.04	345.98	3.60	4.03	3.61	3.98	3.63	4.02	3.66	4.00	95.86	96.62	96.62
0.03	0.03	195.04	348.11	3.60	4.03	3.60	3.98	3.63	4.02	3.67	4.01	95.80	96.51	96.68
0.03	0.03	195.04	342.88	3.60	4.04	3.61	3.98	3.64	4.02	3.66	4.00	95.92	96.74	96.74
0.03	0.03	199.61	339.81	3.59	4.03	3.60	3.97	3.63	4.02	3.66	4.00	95.69	96.51	96.62
0.03	0.03	192.31	342.88	3.59	4.03	3.61	3.98	3.64	4.02	3.66	4.00	95.69	96.68	96.60
0.03	0.04	194.04	345.98	3.59	4.03	3.60	3.98	3.64	4.02	3.67	4.01	95.88	96.51	96.86
0.03	0.03	199.01	342.88	3.59	4.03	3.60	3.97	3.64	4.02	3.66	4.00	95.74	96.58	96.80
0.03	0.03	199.61	342.88	3.59	4.03	3.60	3.98	3.63	4.02	3.66	4.00	95.80	96.51	96.62
0.03	0.03	199.61	342.88	3.59	4.03	3.60	3.98	3.64	4.02	3.66	4.00	95.69	96.51	96.86

POST-TRIP DATA-TRIP TIME 183258

0.03	0.04	195.35	335.01	2.03	3.37	2.07	3.23	2.08	3.26	1.84	3.08	96.72	98.01	97.65
0.03	0.04	8.20	9.31	0.10	0.11	0.10	0.11	0.11	0.12	0.11	0.10	2.76	2.87	2.81
0.03	0.04	5.05	5.73	0.07	0.07	0.07	0.07	0.08	0.07	0.06	1.76	1.82	1.76	1.75
0.03	0.04	3.68	4.14	0.05	0.05	0.05	0.05	0.05	0.06	0.05	0.04	1.28	1.41	1.35
0.03	0.04	2.79	3.13	0.04	0.03	0.03	0.03	0.04	0.04	0.04	0.02	1.00	1.05	1.00
0.03	0.04	2.05	2.31	0.03	0.02	0.03	0.03	0.03	0.04	0.03	0.01	0.82	0.82	0.82
0.03	0.04	1.65	1.88	0.03	0.02	0.02	0.02	0.03	0.03	0.03	0.01	0.70	0.82	0.77
0.03	0.04	1.32	1.49	0.02	0.02	0.02	0.02	0.02	0.03	0.02	0.00	0.53	0.59	0.53
0.03	0.04	1.14	1.29	0.02	0.01	0.02	0.01	0.02	0.03	0.02	0.00	0.53	0.58	0.53
0.03	0.04	0.95	1.06	0.02	0.01	0.02	0.01	0.02	0.03	0.02	0.00	0.42	0.53	0.47
0.03	0.03	0.78	0.85	0.01	0.00	0.01	0.00	0.01	0.02	0.01	-0.01	0.30	0.35	0.30
0.03	0.03	0.62	0.70	0.01	-0.00	0.00	0.00	0.01	0.01	0.01	-0.01	0.18	0.23	0.23
0.03	0.03	0.53	0.59	0.01	0.00	0.01	0.00	0.01	0.01	0.01	-0.01	0.18	0.30	0.23
0.03	0.03	0.45	0.50	0.01	0.00	0.01	0.00	0.01	0.01	0.01	-0.01	0.23	0.30	0.23
0.03	0.03	0.37	0.41	0.00	-0.00	0.00	0.00	0.01	0.01	0.00	-0.01	0.12	0.23	0.18
0.03	0.03	0.32	0.35	0.00	-0.00	0.00	-0.00	0.00	0.01	0.00	-0.01	0.12	0.18	0.12
0.03	0.03	0.27	0.30	0.00	-0.00	0.00	-0.30	0.00	0.01	0.00	-0.01	0.18	0.18	0.18
0.03	0.03	0.23	0.26	0.00	0.00	0.00	0.00	0.01	0.01	0.01	-0.01	0.18	0.23	0.18
0.03	0.03	0.20	0.22	0.00	-0.00	0.00	-0.30	0.00	0.01	0.00	-0.02	0.06	0.23	0.06
0.03	0.03	0.17	0.19	0.00	-0.00	0.00	-0.30	0.00	0.00	0.00	-0.02	0.00	0.12	0.06
0.03	0.03	0.15	0.16	0.00	-0.00	0.00	-0.30	0.00	0.00	0.00	-0.02	0.00	0.18	0.00
0.03	0.03	0.13	0.14	0.00	-0.00	0.00	-0.30	0.00	0.00	0.00	-0.02	0.00	0.18	0.06
0.03	0.03	0.11	0.13	0.00	-0.00	0.00	-0.30	0.00	0.00	0.00	-0.02	0.00	0.18	0.00
0.03	0.03	0.10	0.11	-0.00	-0.00	0.00	-0.31	-0.30	0.00	-0.00	-0.02	-0.06	0.06	-0.05

Post-Trip Review Fig 18-1

SELECT FUNC. KEY OR TURN-ON CODE CAL: 6/ 9/99 12:05:25 SPDS

TROJAN NUCLEAR POWER PLANT
CALORIMETRIC CALCULATION SUMMARY
CURRENT DATA FEED FLOW

PAGE 1 OF 3
DATE 6/ 9/99
TIME 12:05:05

TOTAL CORE THERMAL POWER	VALUE	UNITS
STEAM GENERATOR THERMAL POWER - LOOP A	838.73	MWT
- LOOP B	834.31	MWT
- LOOP C	809.92	MWT
- LOOP D	836.02	MWT
TOTAL	3318.97	MWT
TOTAL CORE THERMAL POWER (CTP)	3304.50	MWT
TOTAL CORE ELECTRIC POWER	1165.35	MWE
MWE GROSS DEVIATION	6.97	%
CORE THERMAL POWER	96.88	% POWER
AVERAGE OF NIS READINGS	100.17	% POWER
AVERAGE OF RCS DELTA TEMPERATURES	101.61	% POWER

SUMMARY OF NIS INDICATIONS	VALUE	UNITS	NIS - CAL
NUCLEAR POWER RANGE CHANNEL N41 Q4	100.20	% POWER	3.31
NUCLEAR POWER RANGE CHANNEL N42 Q2	100.03	% POWER	3.14
NUCLEAR POWER RANGE CHANNEL N43 Q1	100.20	% POWER	3.31
NUCLEAR POWER RANGE CHANNEL N44 Q3	100.24	% POWER	3.35

FLOW/TEMPERATUE INFORMATION	LOOP A	LOOP B	LOOP C	LOOP D	UNITS
CORRECTED FEED FLOW	3.6603	3.6395	3.5356	3.6483	MLB/HR
CORRECTED STEAM FLOW	3.5655	3.5009	3.3796	3.5327	MLB/HR
CORRECTED BLOWDOWN FLOW	0.0339	0.0339	0.0339	0.0339	MLB/HR
FEEDWATER TEMPERATURE	430.88	430.88	430.88	430.88	DEGF

PAGE BACK | CAL MENU | NSS MENU | PAGE FORWARD

F1=CAL MENU F2= F3= F4= F5= F6=
PREV CANC
TROJAN TERM=TT17 CPU=A CONSOLE=PRIMARY MODE=PWR OPER EVENT=UNU

Calorimetric Screen Fig 18-2

SELECT FUNC. KEY OR TURN-ON CODE RLR: 6/ 9/99 12:07:10 SPDS

TROJAN NUCLEAR PLANT
RCS LEAK RATE

TEST PERIOD: 9-JUN-1999 07:55:25 TO 9-JUN-1999 11:55:25

PARAMETER	ADDRESS	INITIAL VALUE		FINAL VALUE		CHANGE	
TOTAL MINUTES OF RUN TIME						240.00	MINS.
TOTAL FLOW INTEGRATOR		593398.	STEPS	593398.	STEPS	0.	GALS.
PRIMARY SAMPLE VOLUME				0.00	GALS.	0.00	GALS.
PZR LEVEL	L0482A	61.660	GOOD	61.660	GOOD	0.000	%
VCT LEVEL	L0112A	52.784	GOOD	52.784	GOOD	0.000	%
PRT LEVEL	L0485A	65.140	GOOD	65.140	GOOD	0.000	%
PRT TEMPERATURE	T0485A	98.242	GOOD	98.242	GOOD	0.000	DEGF
RCDT LEVEL	L3060A	48.361	GOOD	48.361	GOOD	0.000	%
RCS AVE Tave	U0484	583.056	GOOD	583.056	GOOD	0.000	DEGF
PZR AVE PRESSURE	U0482	2233.129	GOOD	2233.129	GOOD	0.000	PSIG
PZR PRESS. ABS		2247.829	GOOD	2247.829	GOOD	0.000	PSIA

LEAKAGE TO THE PRESSURIZER RELIEF TANK 0.000 GPM
LEAKAGE TO REACTOR COOLANT DRAIN TANK 0.000 GPM

PRIMARY COOLANT AVERAGE LOSS RATE 0.000 GALS.

TOTAL RCS LEAKAGE RATE (ALR) 0.000 GOOD GPM

TOTAL LEAKRATE INSIDE CONTAINMENT (TLRIC) 0.000 GPM
TOTAL LEAKRATE OUTSIDE CONTAINMENT(TLROC) 0.000 GPM

IDENTIFIED LEAKAGE RATE 0.000 GOOD GPM 10 GPM max allowable

UNIDENTIFIED LEAKAGE RATE 0.000 GOOD GPM 1 GPM max allowable

MESSAGE(S):

CANCEL | NEW CALC | PRINT RPT | NSSS MENU

F1= PREV CANC ↔ F2=NEW CALC F3=PRINT RPT F4= F5=NSSS MENU F6=FIELD SEL
TROJAN TERM=TT17 CPU=A CONSOLE=PRIMARY MODE=PWR OPER EVENT=UNU

RCS Leak Rate Fig 18-3

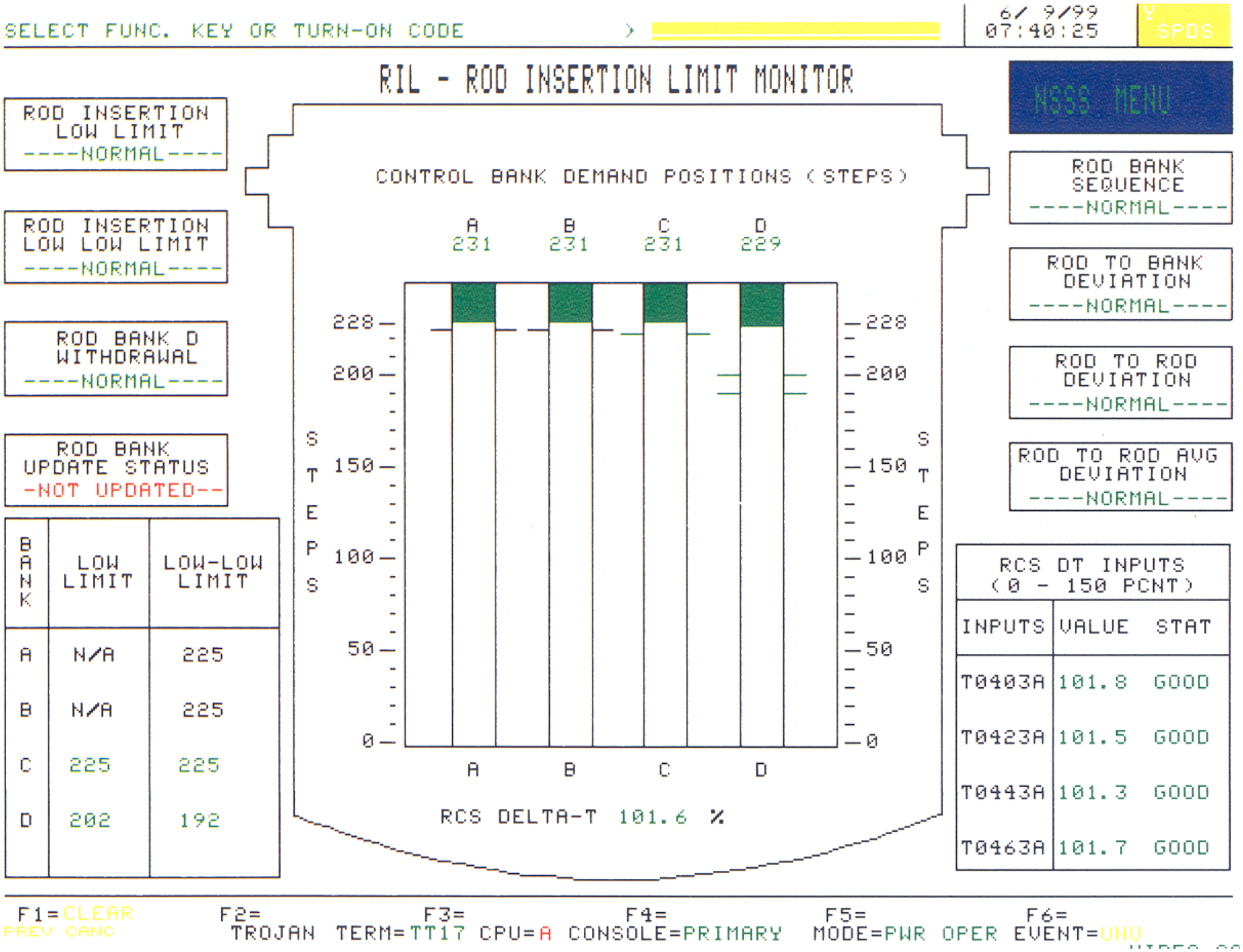

BANK	LOW LIMIT	LOW-LOW LIMIT
A	N/A	225
B	N/A	225
C	225	225
D	202	192

RCS DT INPUTS (0 - 150 PCNT)

INPUTS	VALUE	STAT
T0403A	101.8	GOOD
T0423A	101.5	GOOD
T0443A	101.3	GOOD
T0463A	101.7	GOOD

Rod Insertion Limit Fig 18-4

SELECT FUNC. KEY OR TURN-ON CODE >

6/ 9/99
07:40:25

SPDS

INCORE T/C MAP

D N-41 | A N-43 | C N-44 | B N-42

	R	P	N	M	L	K	J	H	G	F	E	D	C	B	A
1	4				584			605							1
2			584		631				633		631				
3			601			607		615				632	600	583	
4									632		617				
5	585	632		617		637		636		640				630	
6											632				
7		631					621					627			
8	604		93		629			608	625		630		613		605
9			607		622			624	620	629		628			590
10	589			615			628				629			633	
11		632				629		629	623	629					585
12				617	615					615			634		
13			601	634		606		612					601		
14					631			606			631				
15	3					589				590					2

WIDE LEG TEMPERATURE

	HOT	COLD	UNITS
1	612.0	547.5	DEGF
2	614.0	551.4	DEGF
3	610.7	550.2	DEGF
4	615.3	552.0	DEGF

HOTTEST T/C

TEMP	LOCATION
640	F-05

SUBCOOLING 13.4 DEGF
OVERPRESSURE 200.9 PSIG

TC NSS

F1=NSS MENU PREV CANC F2= F3=TC MENU F4= F5= F6=
TROJAN TERM=TT17 CPU=A CONSOLE=PRIMARY MODE=PWR OPER EVENT=UNU

Incore T/C Map Fig 18-6

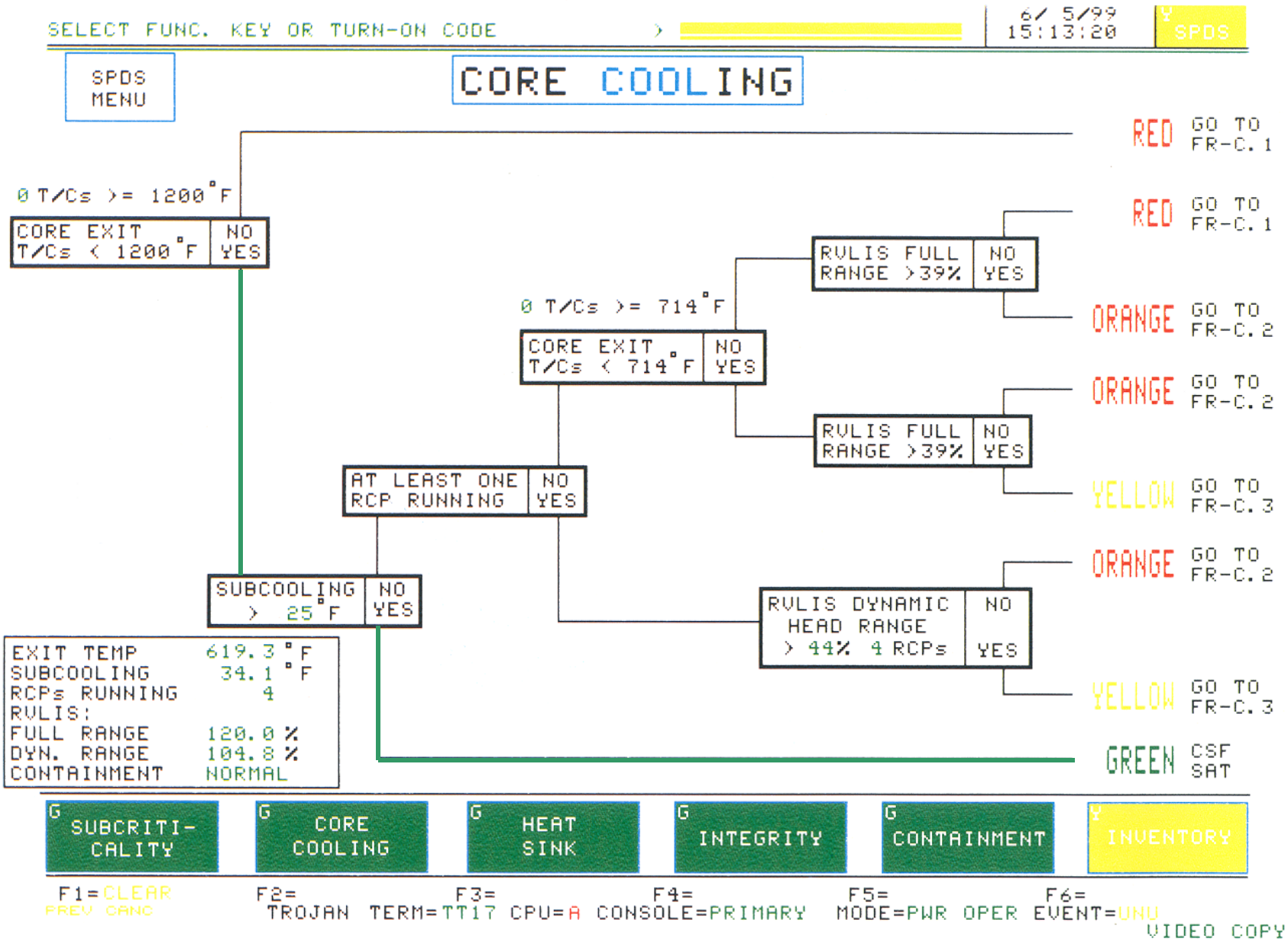

CSF Status Tree Fig 18-7

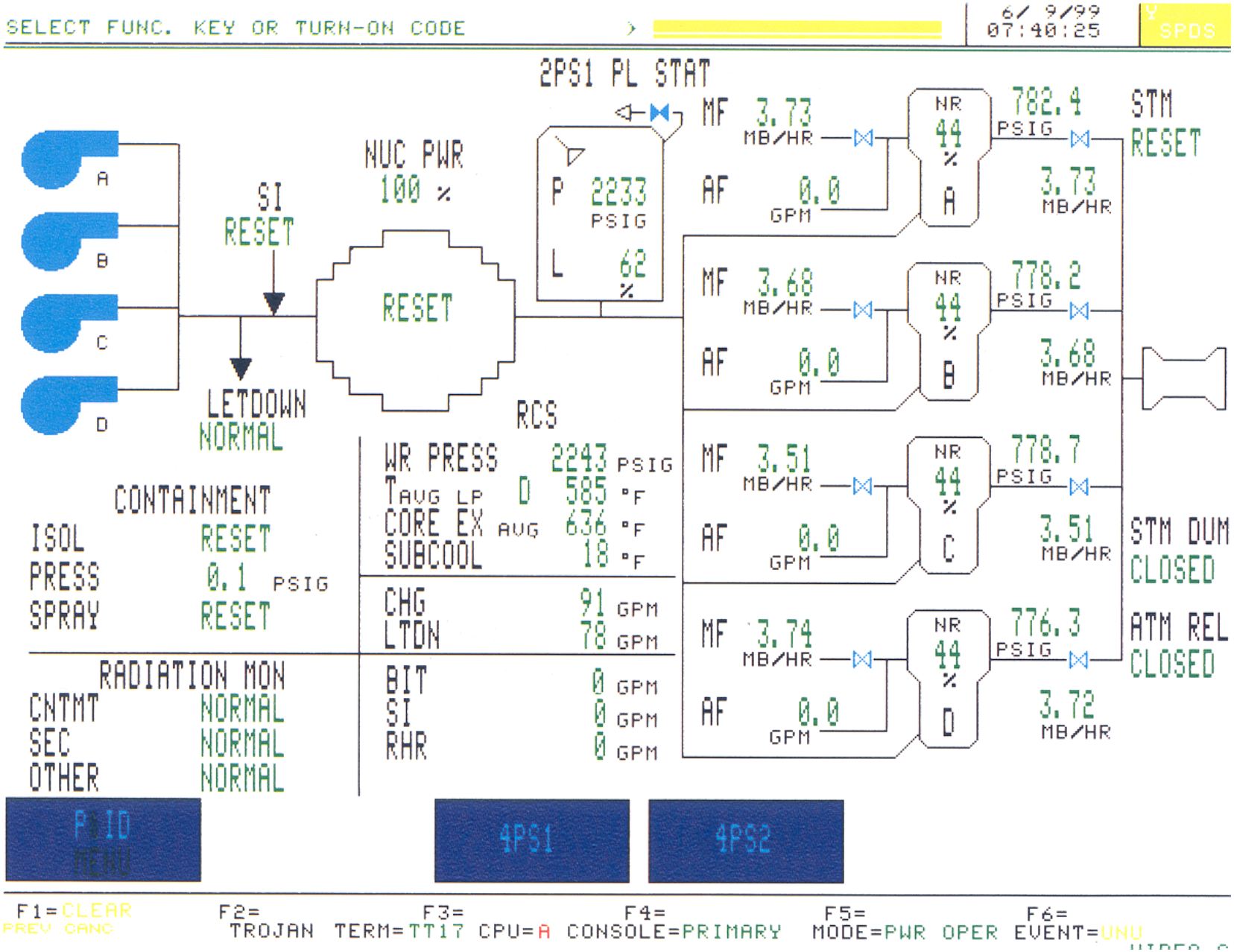

At Power Display Fig 18-8

ERDS

Emergency **R**esponse **D**isplay **S**ystem

- Consists of data sent by the plant to the NRC for events classified as Alert or higher.

- Data consists of information needed to determine status of CSFs plus weather data.