U.S.NRC
UNITED STATES NUCLEAR REGULATORY COMMISSION
Protecting People and the Environment

Radiation Monitoring System

Section 16

HRTD
Human Resources
Training & Development

OBJECTIVES

1. State the purposes of the radiation monitoring system.

2. List the two classes of radiation monitors and give four examples of each.

3. List four radiation monitors that provide automatic actions (other than alarms) and briefly describe the actions provided.

OBJECTIVES

4. List and briefly describe the two types of failed fuel monitors.

5. List the radiation monitors which identify the following:

   a. Primary-to-secondary leakage
   b. Primary-to-containment leakage

Purposes

The Radiation Monitoring System:

- Continuously monitors radiation levels of various plant areas, processes, and effluents, and
- Provides alarms and/or automatic actions if preset limits are exceeded.

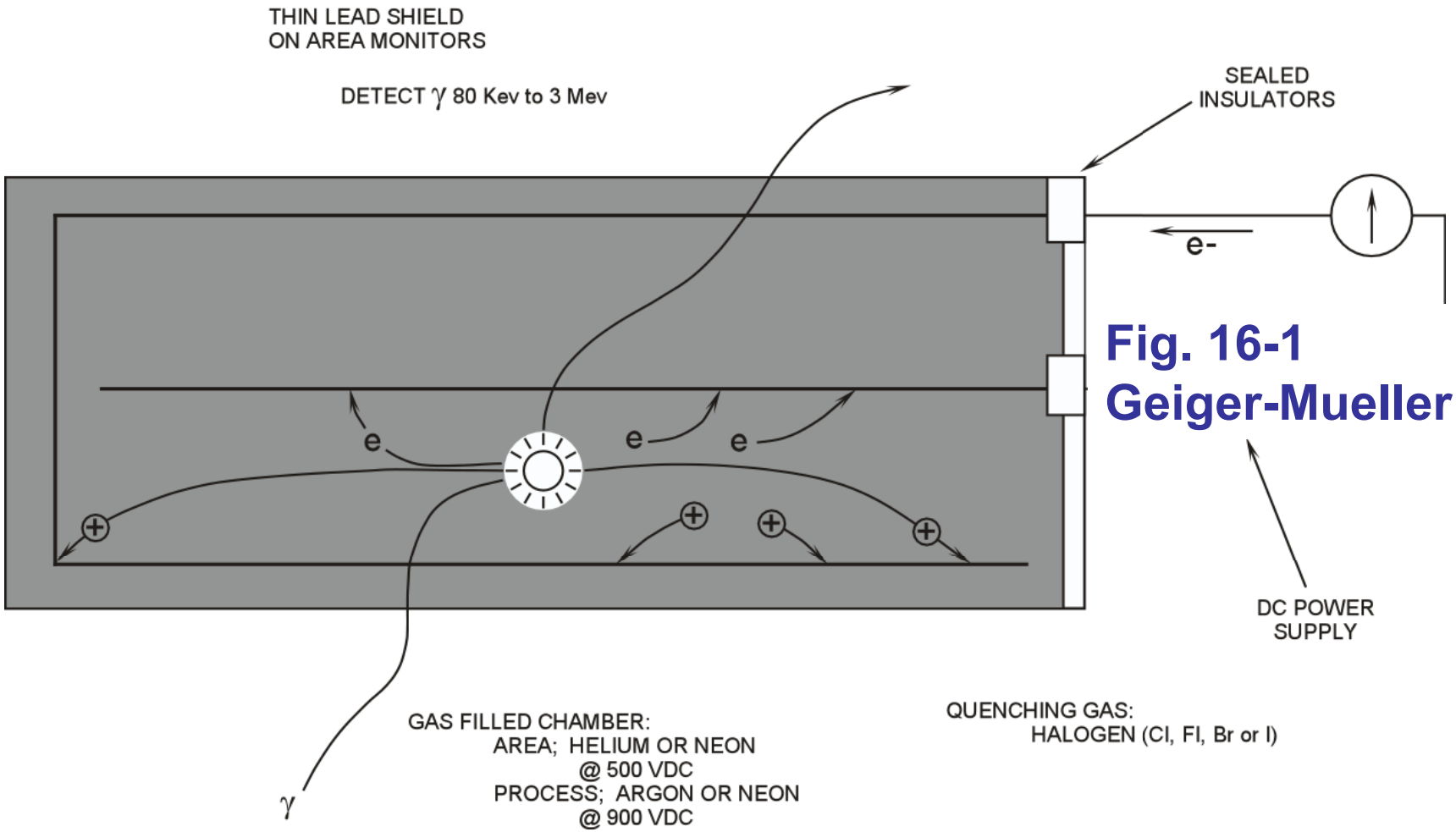

Fig. 16-1
Geiger-Mueller Tube

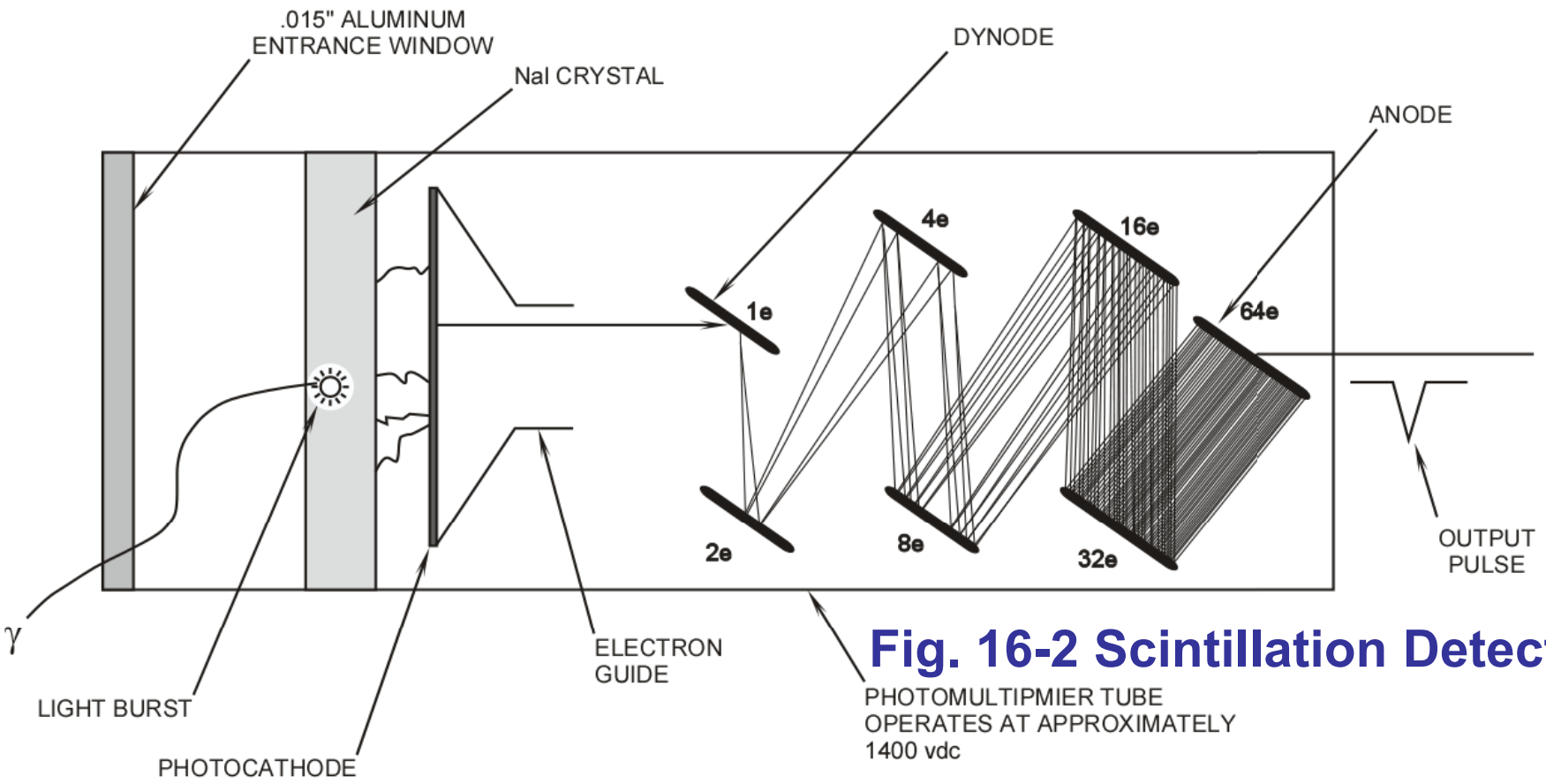

Fig. 16-2 Scintillation Detector

Two classes:

- Process Radiation Monitors (Process & Effluent Monitors at Trojan)

- Area Radiation Monitors

PRMs: Two Methods of Monitoring

- In-Line Monitoring
- Off-Line Monitoring

Figure 14.5-1 Component Cooling Water System

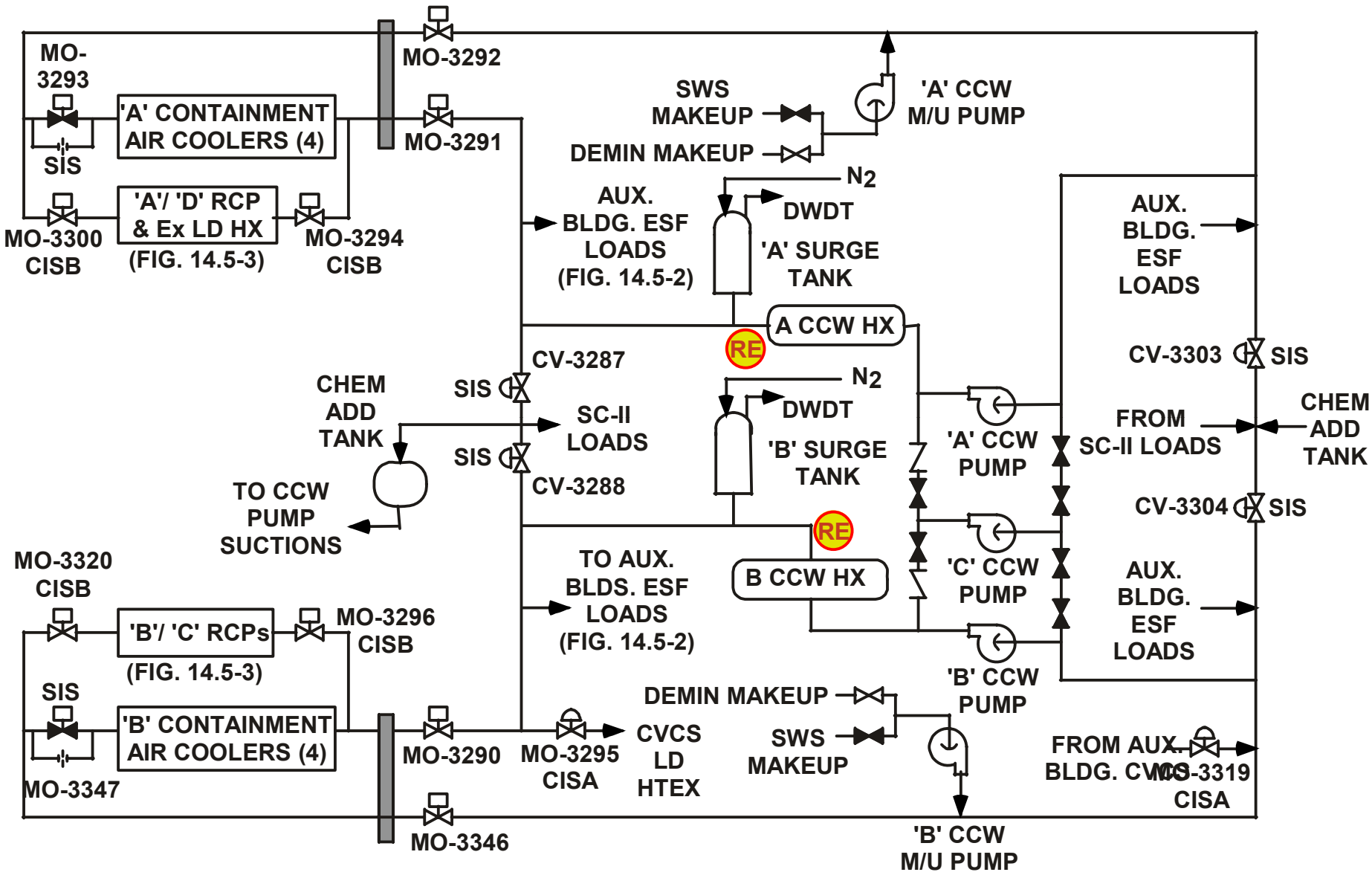

DWDT = Dirty Waste Drain Tank

Fig. 16-4

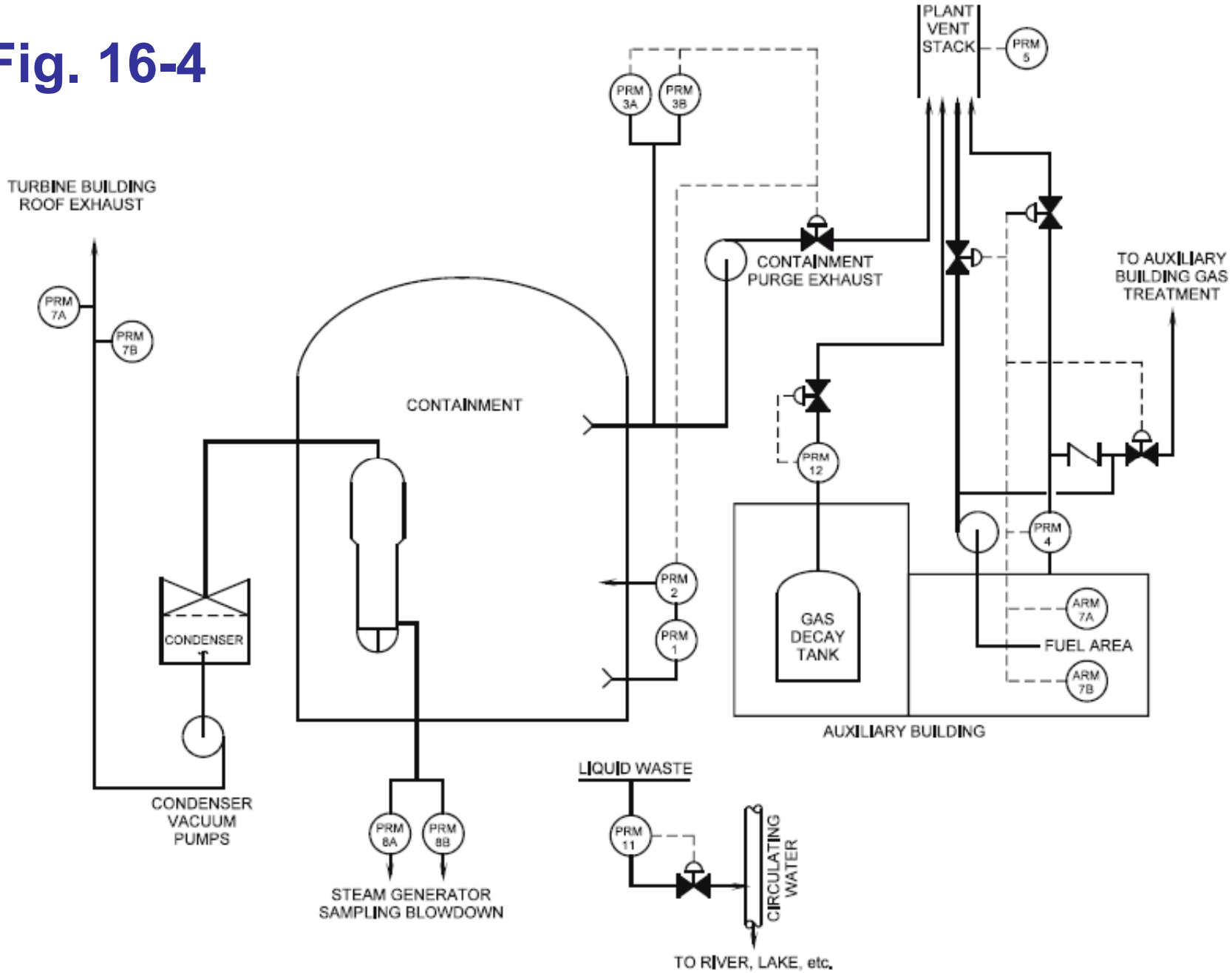
PLANT
VENT
STACK
PRM 5
PRM 3A
PRM 3B
TURBINE BUILDING
ROOF EXHAUST
PRM 7A
PRM 7B
CONTAINMENT
PURGE EXHAUST
TO AUXILIARY
BUILDING GAS
TREATMENT
CONTAINMENT
PRM 12
PRM 4
PRM 2
PRM 1
CONDENSER
GAS
DECAY
TANK
ARM 7A
FUEL AREA
ARM 7B
AUXILIARY BUILDING
CONDENSER
VACUUM
PUMPS
LIQUID WASTE
PRM 8A
PRM 8B
PRM 11
CIRCULATING
WATER
STEAM GENERATOR
SAMPLING BLOWDOWN
TO RIVER, LAKE, etc.

Table 16-1
Process Radiation Monitors

Location	Detector Type	Automatic Action
a. Containment Air Particulate Detector	Gamma scint.	Isolates containment purge and exhaust if running. Isolates relief and vacuum lines. Shifts containment coolers to accident mode.
b. Containment Noble Gas Monitor	Beta scint.	Same as above
c. Purge Exhaust Monitor	APD, G-M tube, gamma scint.	Isolate containment purge supply and exhaust valves if running
d. Auxiliary Building Ventilation Monitor	Beta scint. Gamma scint.	Initiates auxiliary building isolation Diverts to gas treatment system
e. Plant Vent Stack Monitor	G-M tube	Alarm function only
f. Main Control Room Intake Air Particulate Monitor	Beta scint. Gamma scint.	Isolates main control room ventilation
g. Condenser Air Ejector Gas Monitor	G-M tube	Alarm function only
h. Steam Generator Blowdown Liquid Sample	Gamma scint.	Alarm function only
i. CCW - Downstream of Heat Exchanger	Gamma scint.	Closes CCW surge tank vent
j. Service Water Effluent Discharge	Gamma scint.	Alarm function only
k. Waste Disposal System Liquid Discharge to the Environment	Gamma scint. or G-M tube	Closes the effluent discharge to the environment
l. Gas Decay Tank Effluent Discharge Monitor	Beta scint. or G-M tube	Closes the effluent discharge to the environment

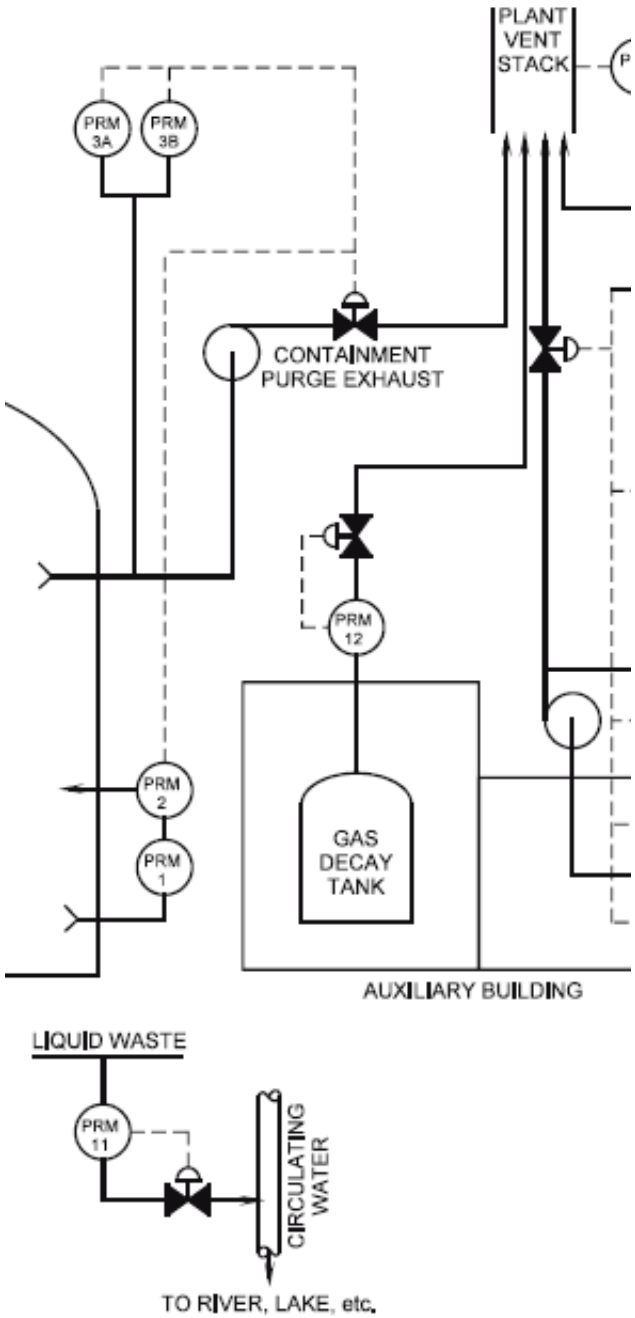

Figure 7.1-3 Main Steam Rad Instrumentation

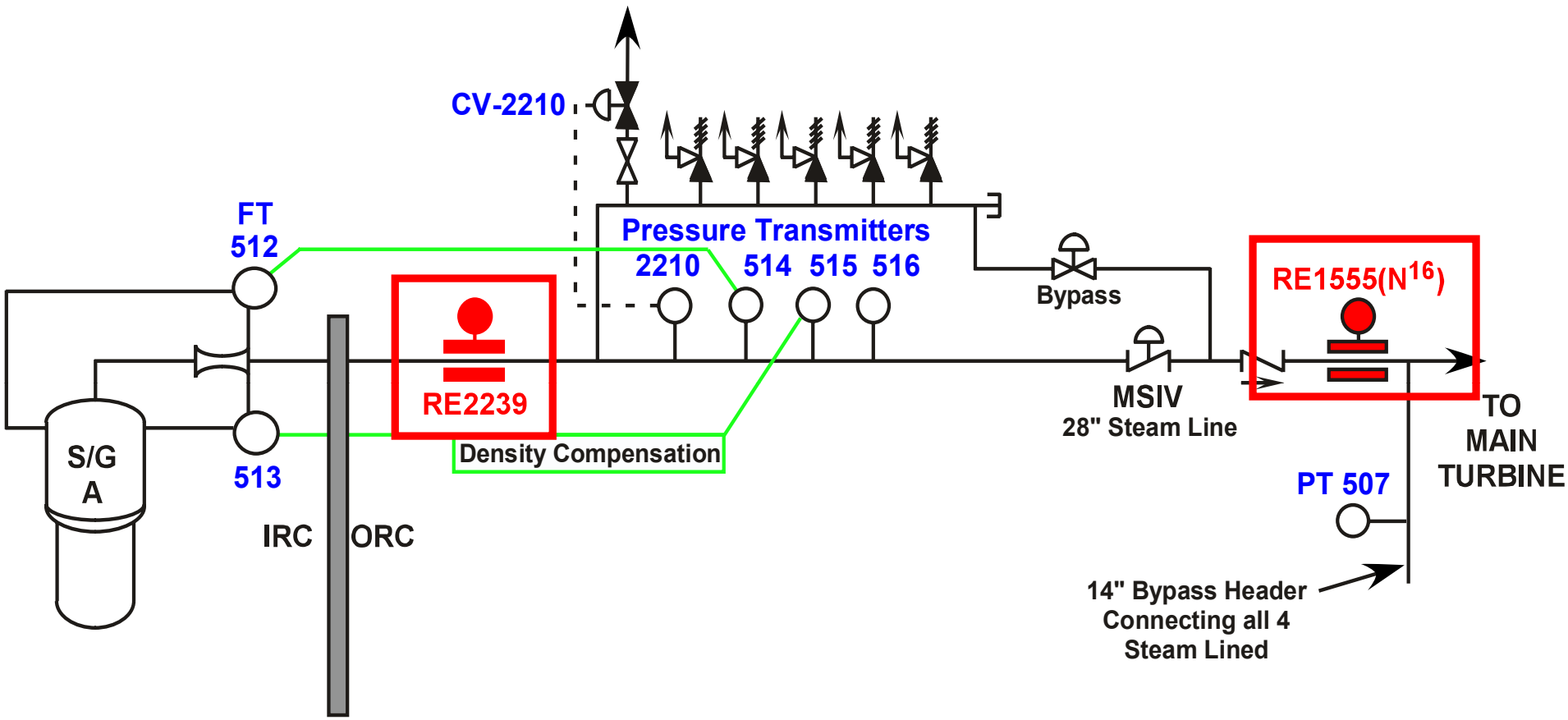

Table 16-2
Area Radiation Monitors

Location	Detector Type	Automatic Action
1. Main Control Room	G-M Tube	Alarm function only*
2. Containment a. Operating deck b. Seal table area c. Dome monitor	 G-M Tube or gamma scint. G-M Tube Ion Chamber	Alarm function only
3. Radio Chemistry Lab	G-M Tube	Alarm function only
4. Charging Pump Room	G-M Tube	Alarm function only
5. Drumming Station	G-M Tube or gamma scint.	Alarm function only
6. Sampling Room	G-M Tube	Alarm function only
7. Spent Fuel Building	G-M Tube or gamma scint.	Isolates auxiliary building exhaust to gas treatment system.
8. Dry Active Waste Storage Area	Air particulate beta scint.	Alarm function only
9. Gas Decay Tank Rooms	Air sample beta scint.	Alarm function only
10. Radwaste Evaporator Room	Air sample beta scint.	Alarm function only

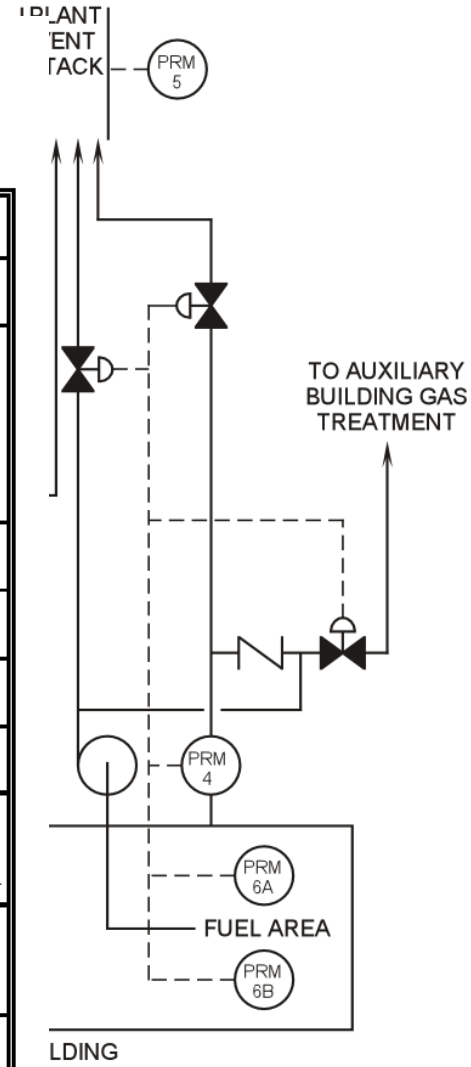

*Some facilities may provide an automatic isolation of the normal control room ventilation system.

Failed Fuel Monitors

- Area radiation monitor in VCT room
- Neutron detector on sample line

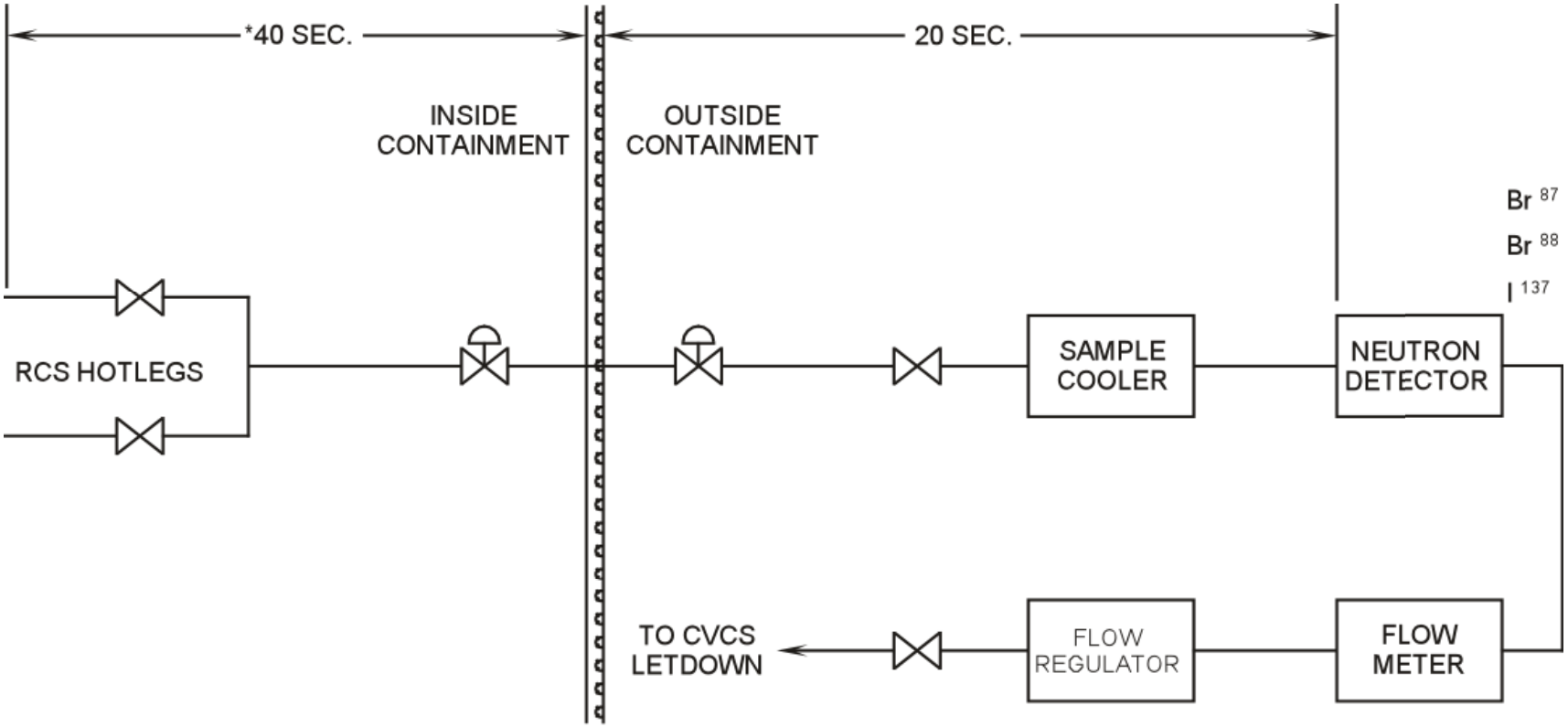

* TIME CONSIDERED FROM CENTER OF CORE.

Fig. 16-3

Primary-to-Secondary Leakage

- Condenser air ejector effluent monitor
- Steam line radiation monitors
- S/G blowdown/sample monitors

Primary-to-Containment Leakage

- Containment gaseous & particulate rad. monitors
- Containment area rad. monitors
- At some plants, sump liquid monitor (PRM)