U.S.NRC
UNITED STATES NUCLEAR REGULATORY COMMISSION
Protecting People and the Environment

GE Electrohydraulic Control (EHC) System

Section 11.5

HRTD
Human Resources
Training & Development

Learning Objectives

1. State the purposes of the turbine electro-hydraulic control (EHC) system.

2. Describe the sequence of events that results when a turbine trip is initiated mechanically or electrically.

Learning Objectives (cont -1)

3. Explain the functions of the following emergency trip system components:
   a. Mechanical trip valve
   b. Lockout valve
   c. Master trip solenoid valve
   d. Relay trip valve
   e. Extraction relay dump valve.

Learning Objectives (cont-2)

4. Describe the generation of turbine valve positioning signals in the following components of the electrical control system:
   a. Speed Control Unit
   b. Load Control Unit
   c. Flow Control Unit.

Fig. 11.5-1

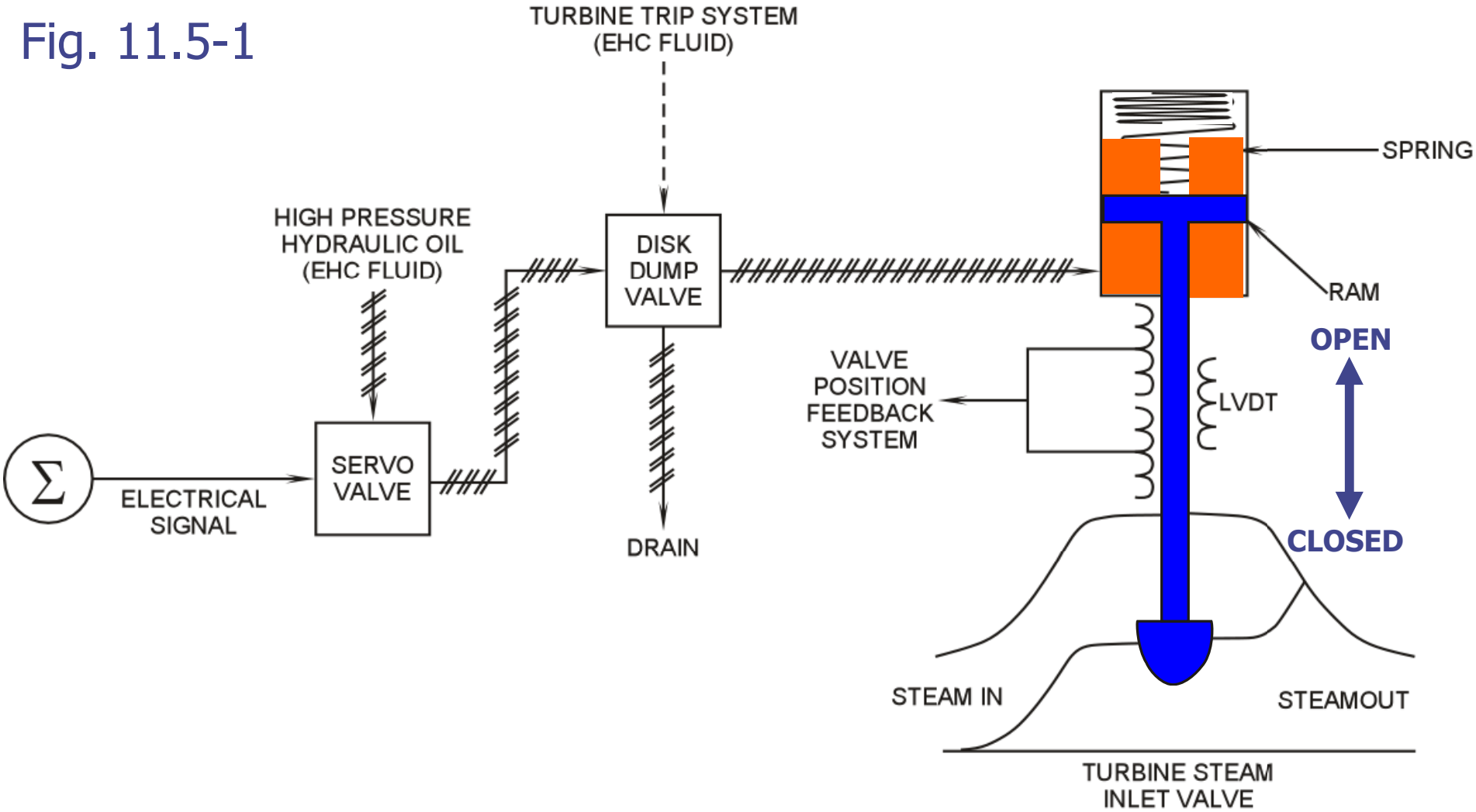
TURBINE TRIP SYSTEM
(EHC FLUID)
SPRING
HIGH PRESSURE
HYDRAULIC OIL
(EHC FLUID)
DISK
DUMP
VALVE
RAM
OPEN
VALVE
POSITION
FEEDBACK
SYSTEM
LVDT
Σ
ELECTRICAL
SIGNAL
SERVO
VALVE
CLOSED
DRAIN
STEAM IN
STEAMOUT
TURBINE STEAM
INLET VALVE

Fig. 11.5-2: EHC Fluid Sys

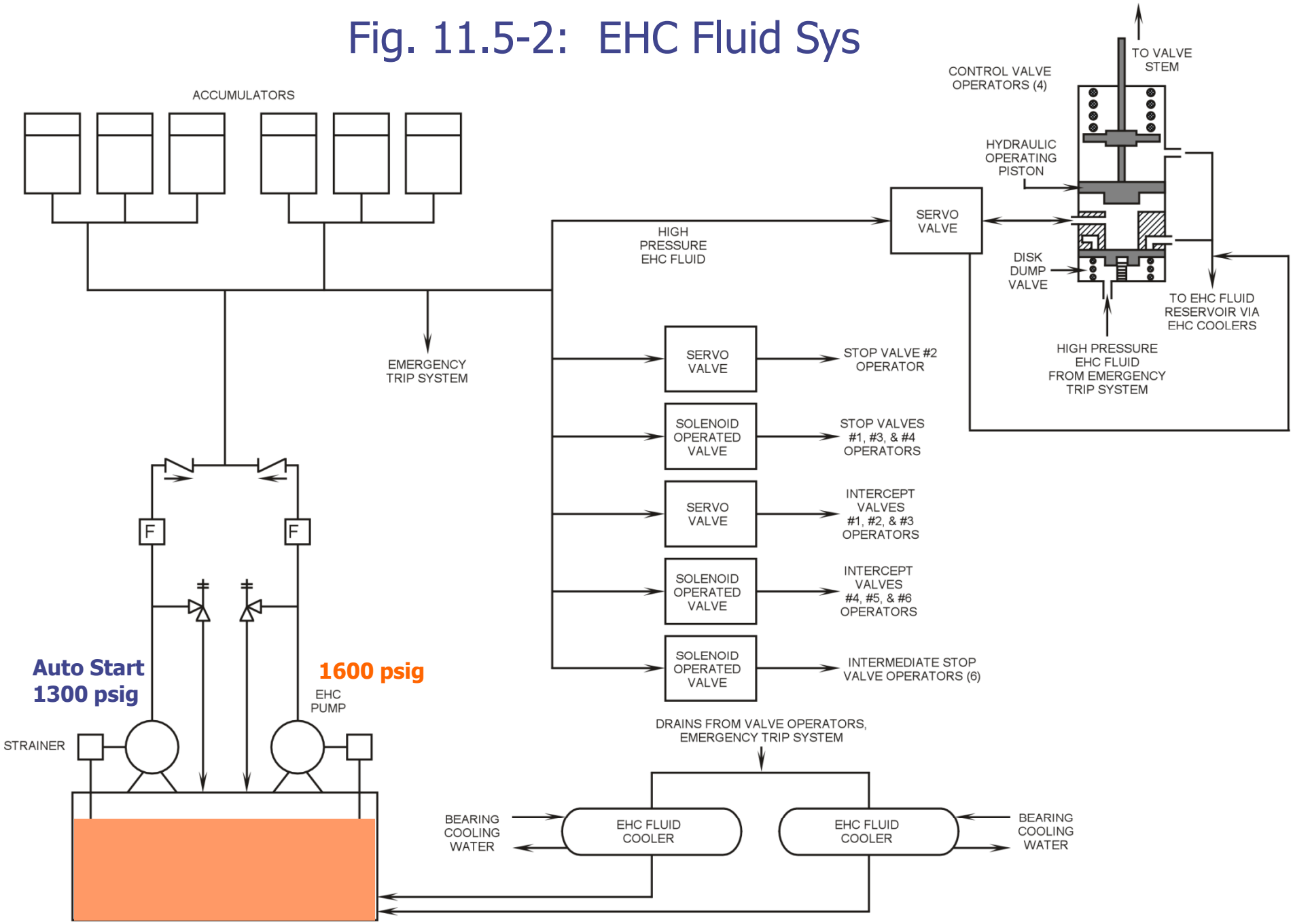

Fig. 11.5-3: Emergency Trip System

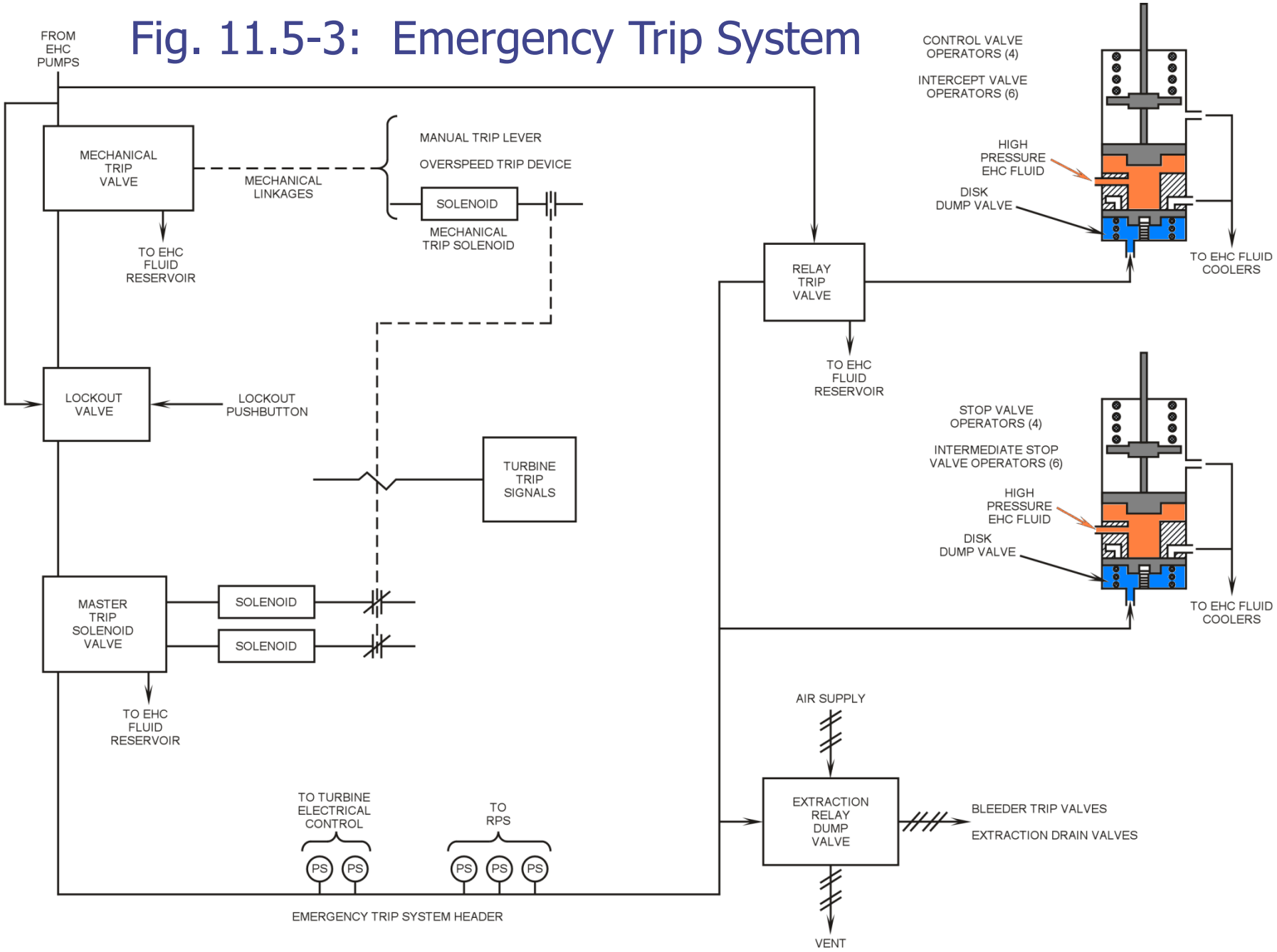

GE EHC Fig. 11.5-4

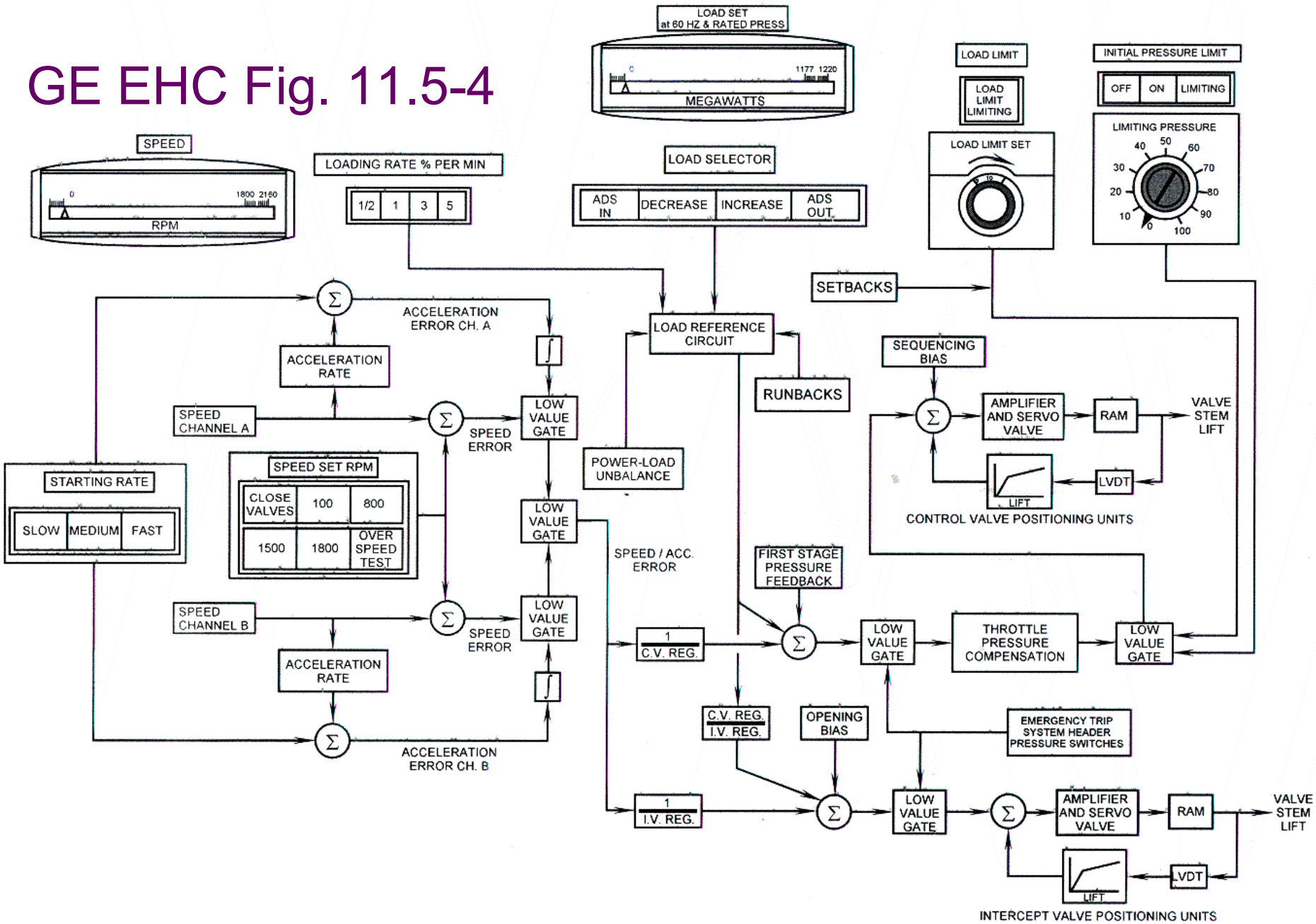

Fig. 11.5-6

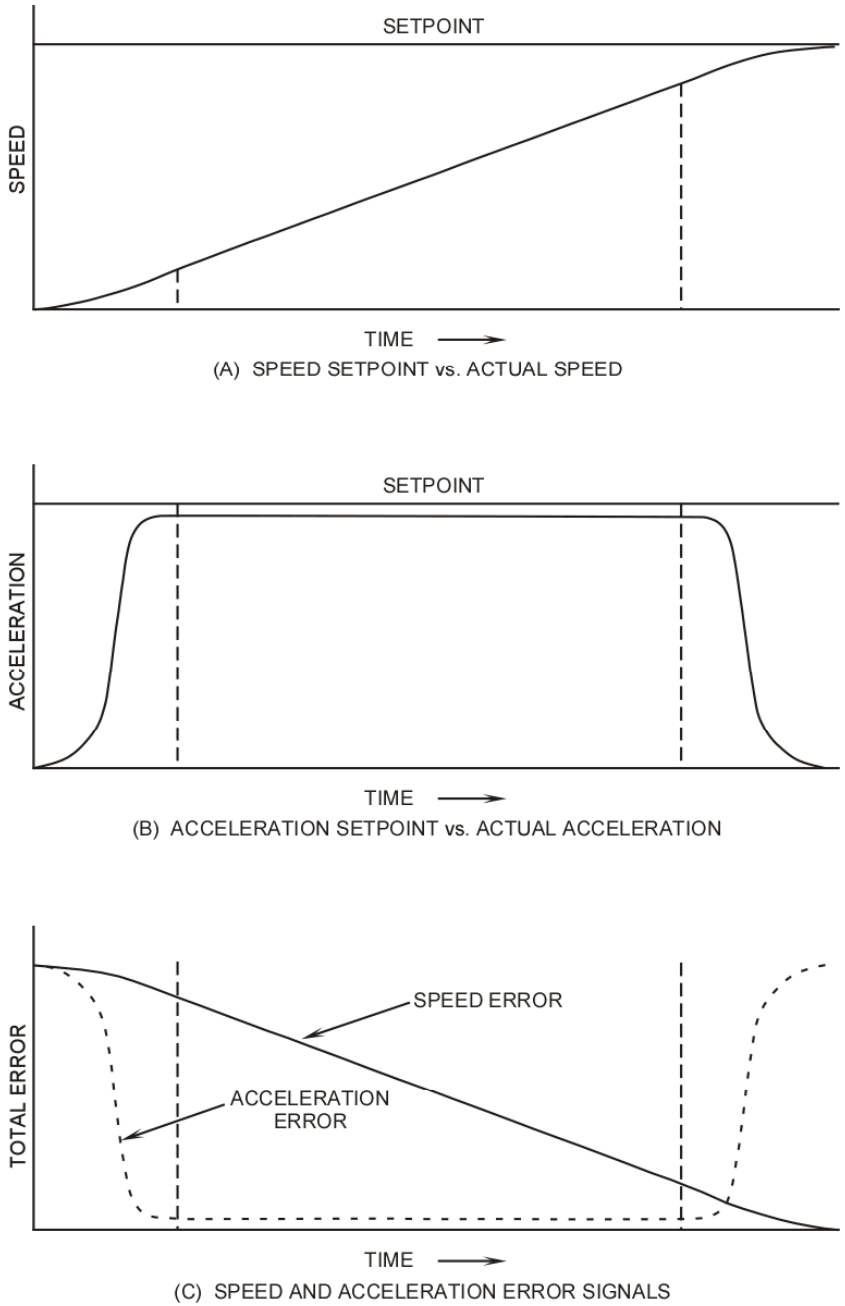
SETPOINT
SPEED
TIME
(A) SPEED SETPOINT vs. ACTUAL SPEED
SETPOINT
ACCELERATION
TIME
(B) ACCELERATION SETPOINT vs. ACTUAL ACCELERATION
SPEED ERROR
ACCELERATION ERROR
TOTAL ERROR
TIME
(C) SPEED AND ACCELERATION ERROR SIGNALS

Fig. 11.5-7 Control & Intercept Valve Regulation

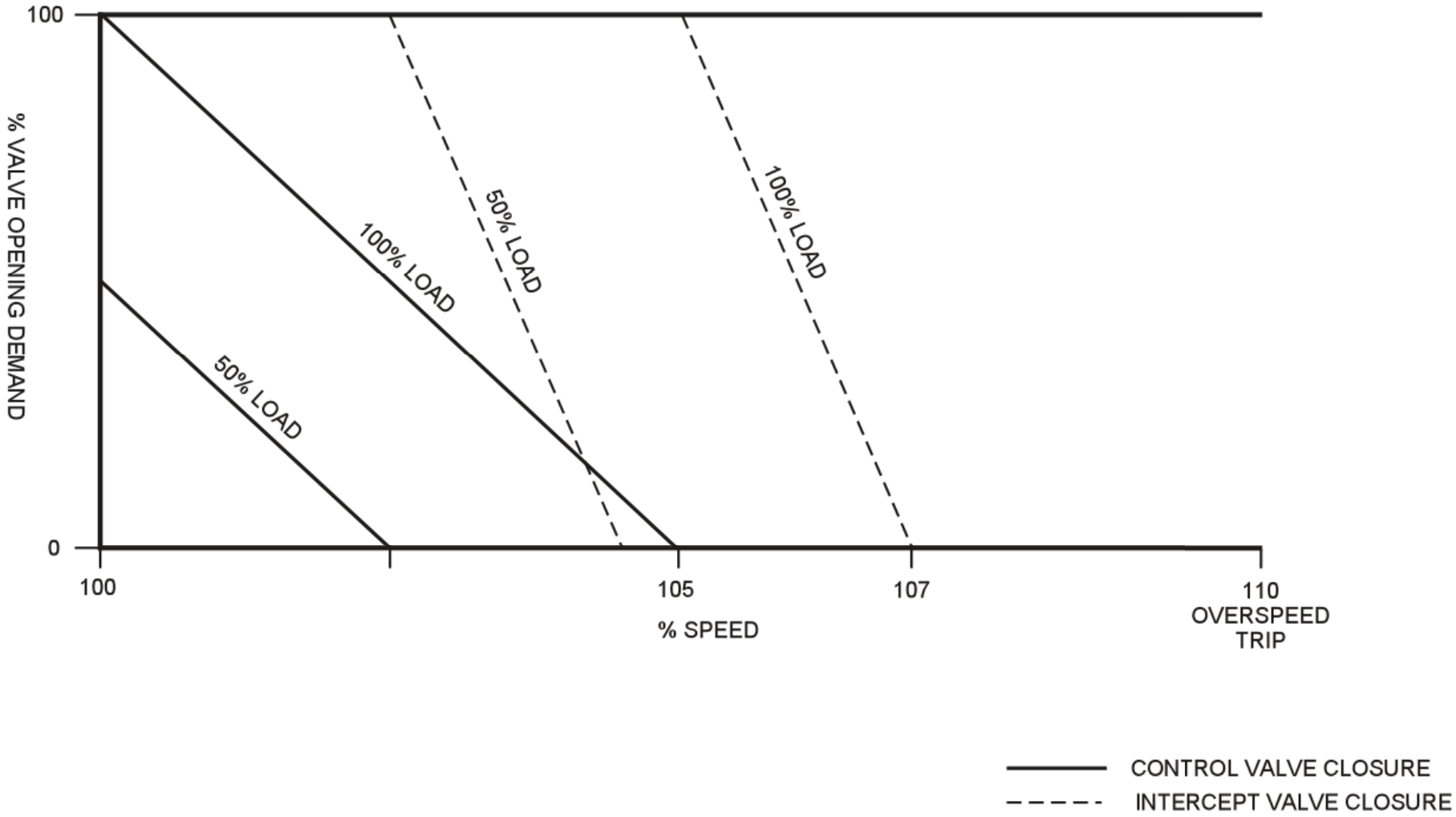

Fig. 11.5-9 Valve Positioning Unit

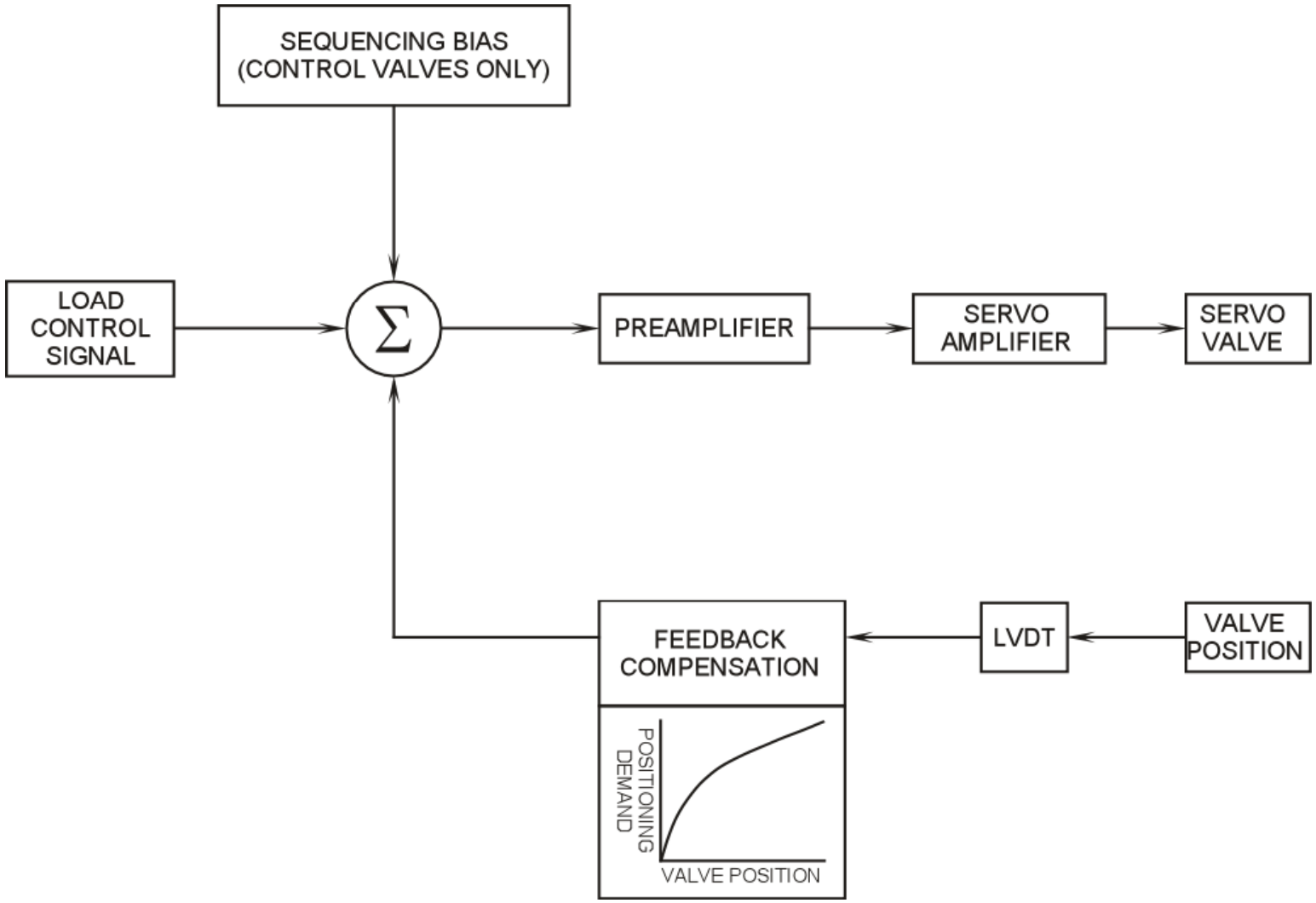

Fig. 11.5-2: EHC Fluid Sys

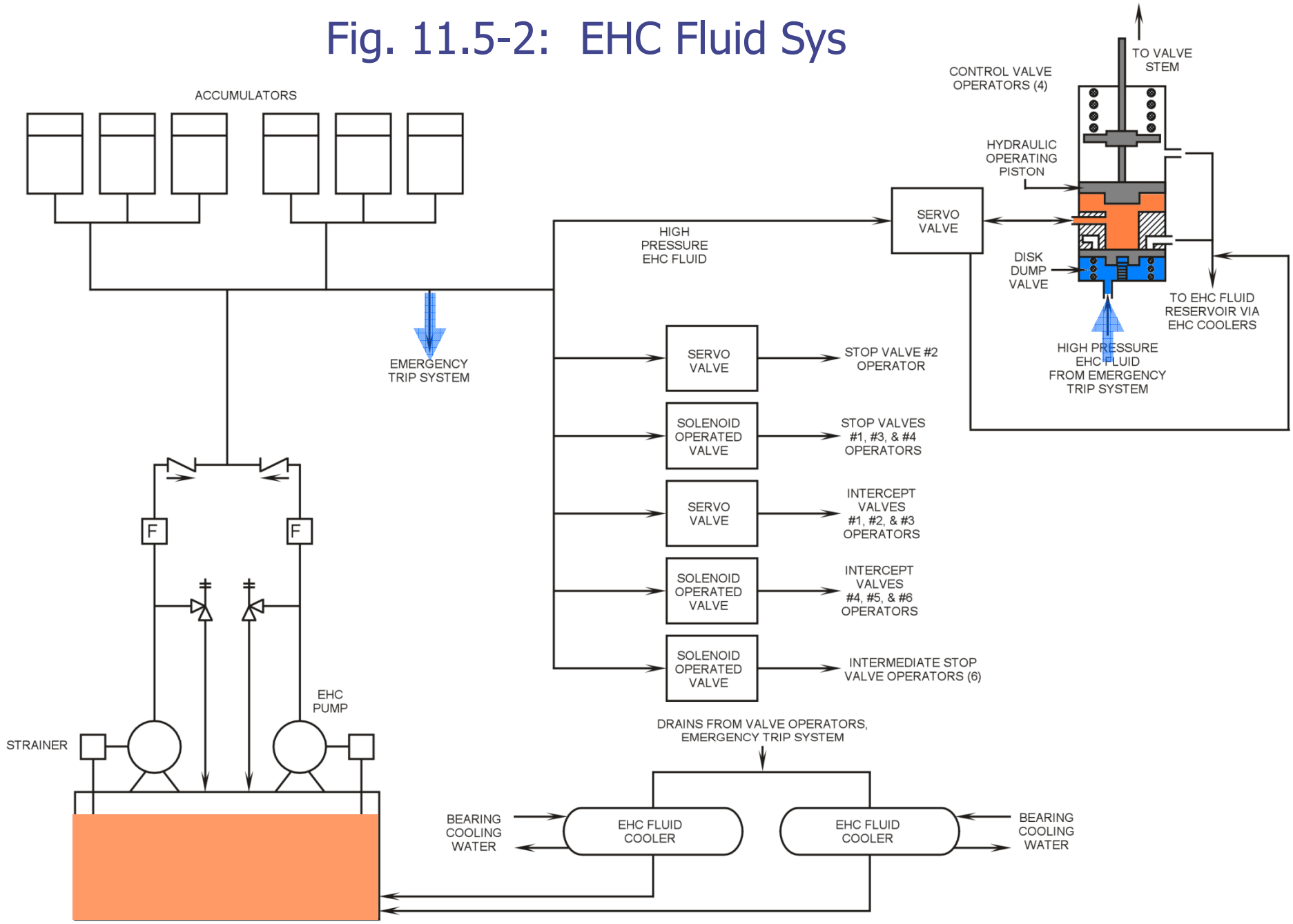
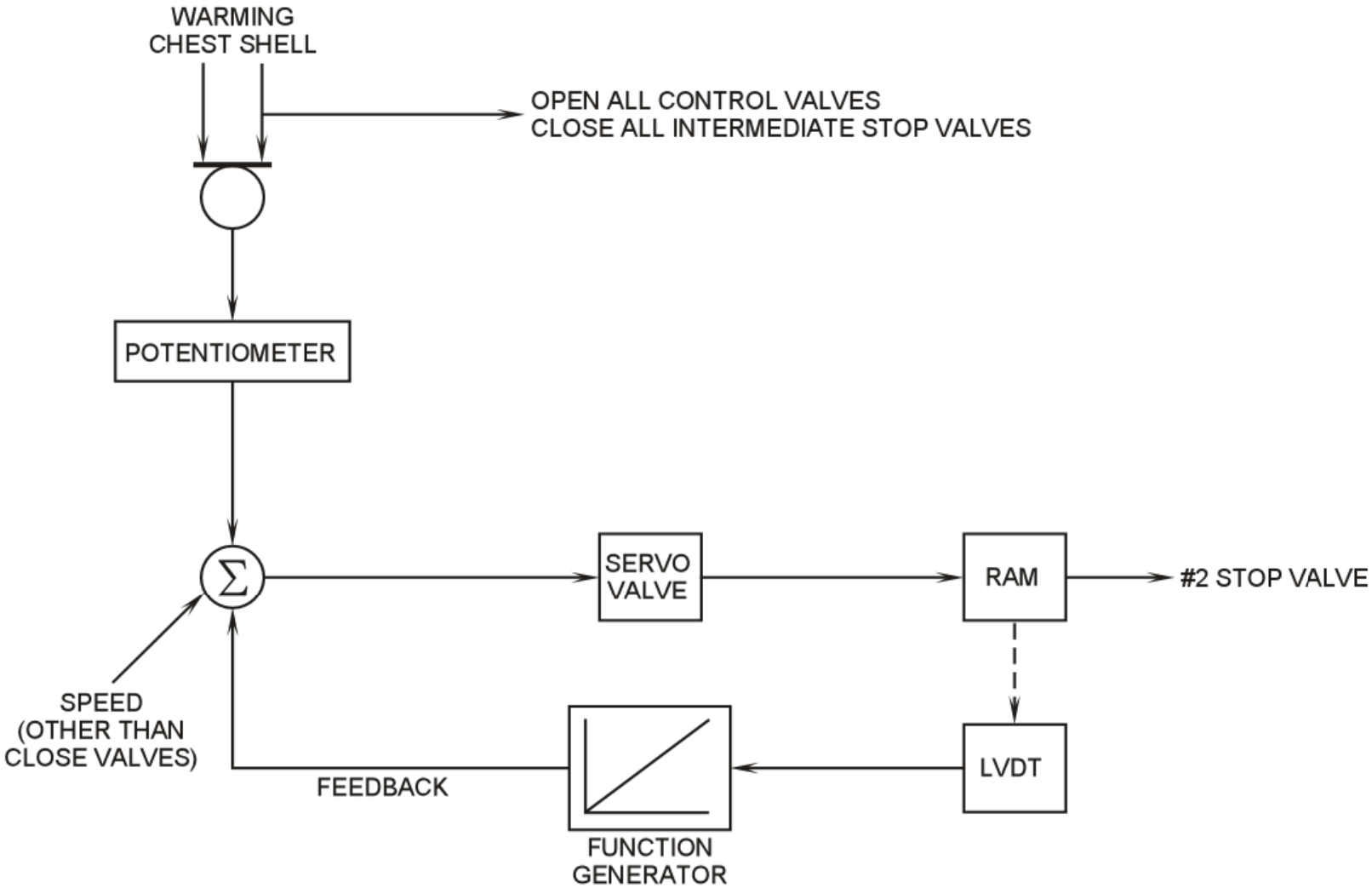
Fig. 11.5-10 Chest/Shell Warming