U.S.NRC
UNITED STATES NUCLEAR REGULATORY COMMISSION
Protecting People and the Environment

Steam Generator Water Level Control System (SGWLCS)

Section 11.1

HRTD
Human Resources
Training & Development

Objectives

1. State the purposes of the Steam Generator Water Level Control System.

2. List the Reactor Protection System and turbine trip inputs provided by steam generator instrumentation and state the purpose of each trip.

Objectives Continued

3. List the inputs used in the feedwater control system. Describe how and why each input is used.

4. List the inputs used in the main feed pump speed control system. Describe how and why each input is used.

Purpose of SGWLC

- To control feedwater flow to maintain the programmed levels in the steam generators.
- To control the main feed pump speed to maintain the programmed main feed regulating valve differential pressure.

Figure 11.1-4 Steam Generator Level Data

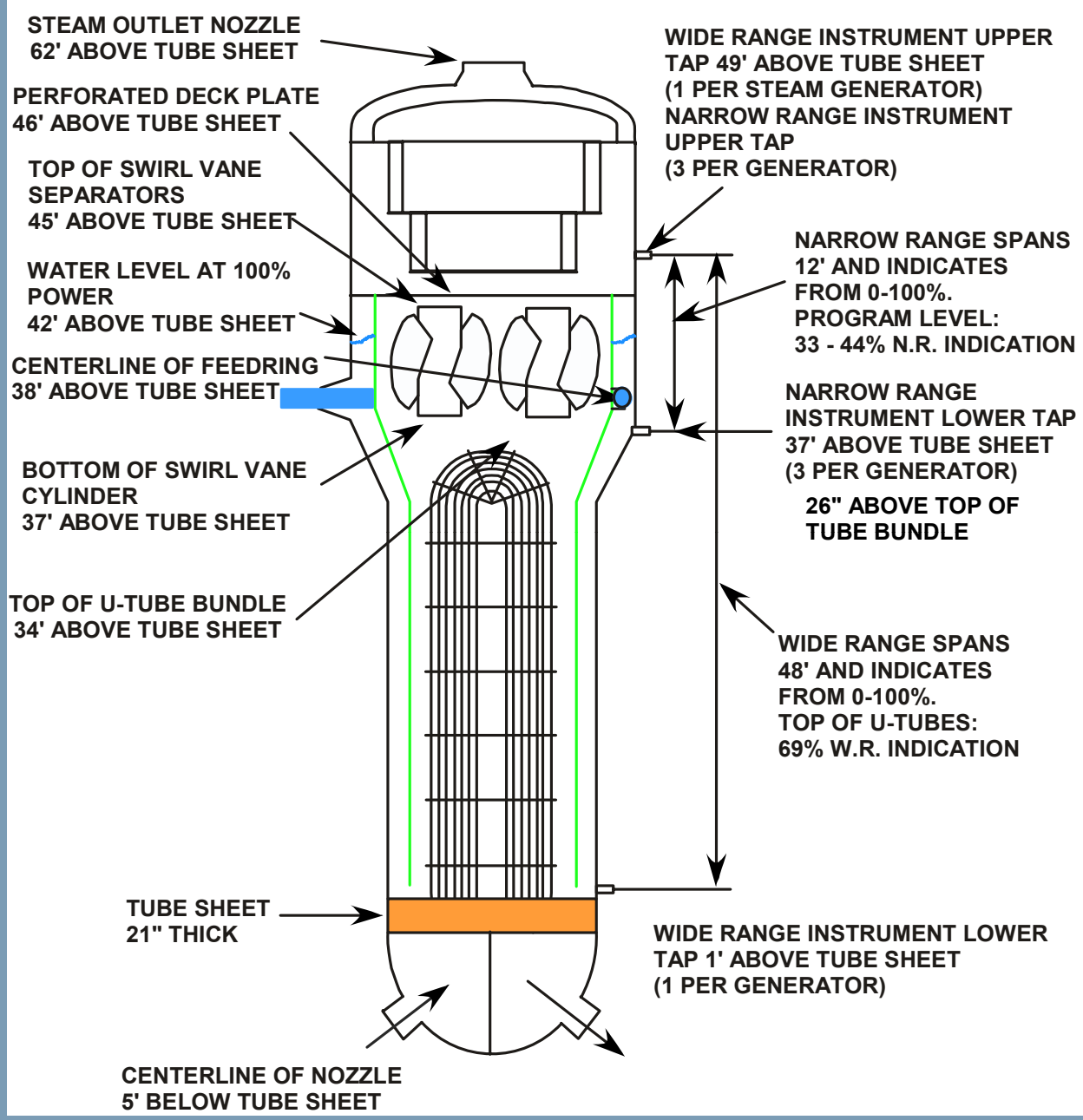

Figure 11.1-1 Feedwater Control System

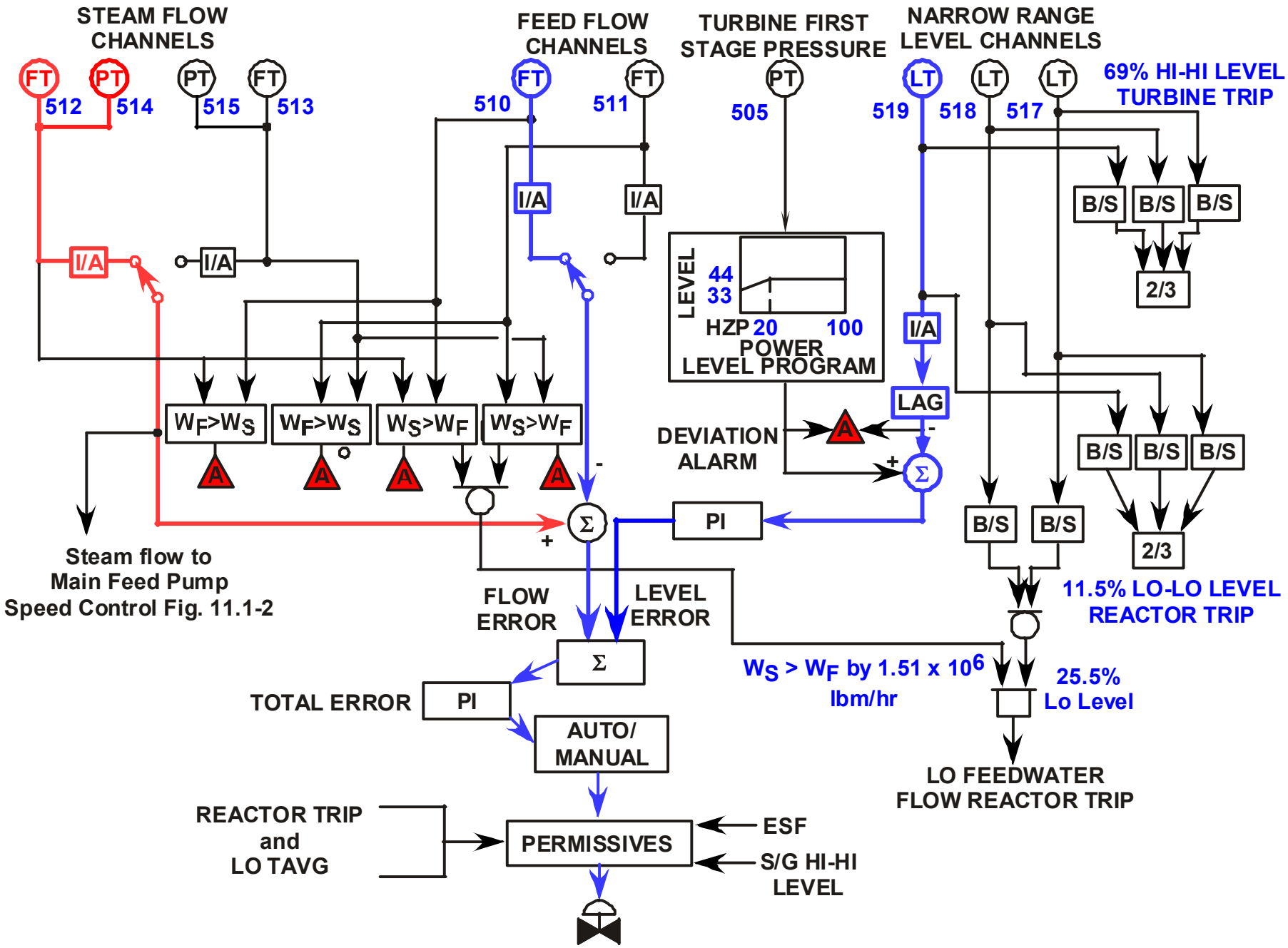

Figure 7.1-3 Main Steam Instrumentation

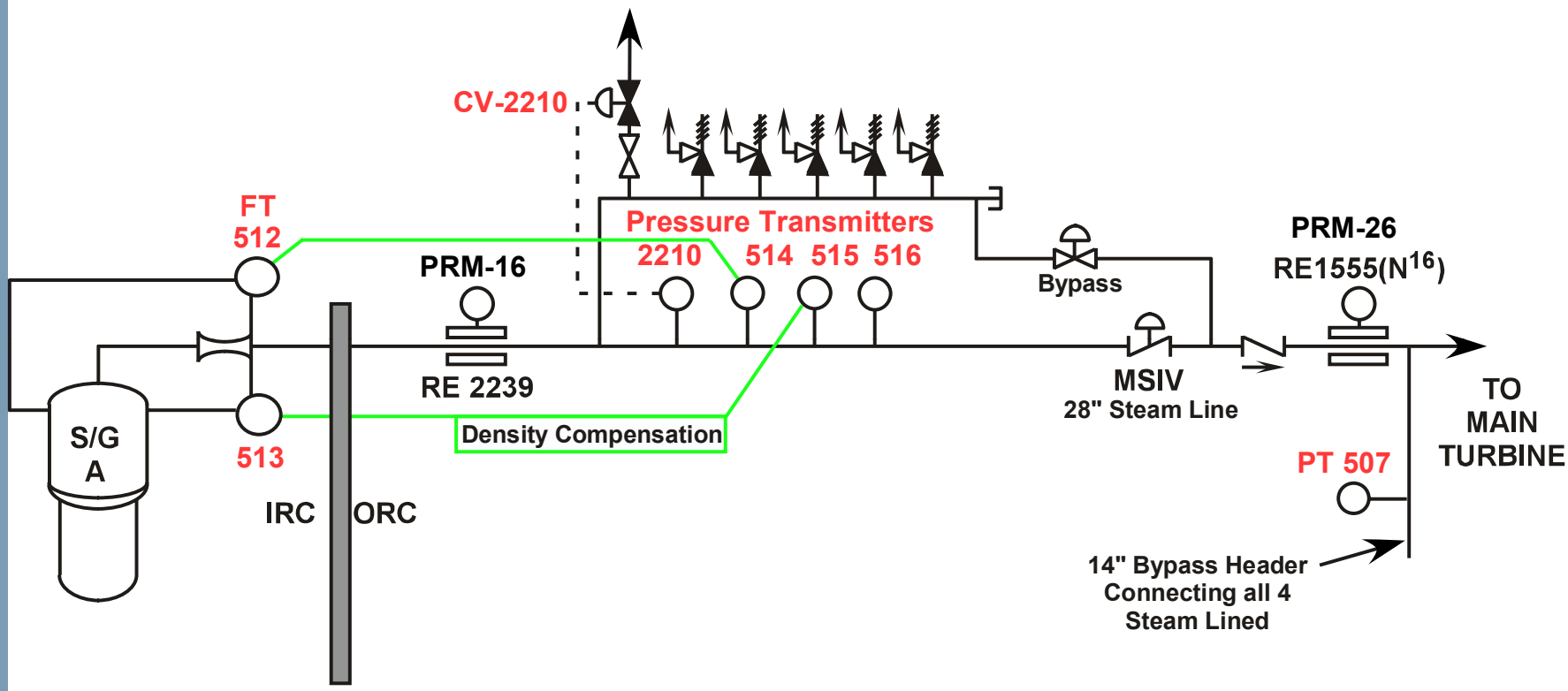

Figure 7.2-5 Feedwater System

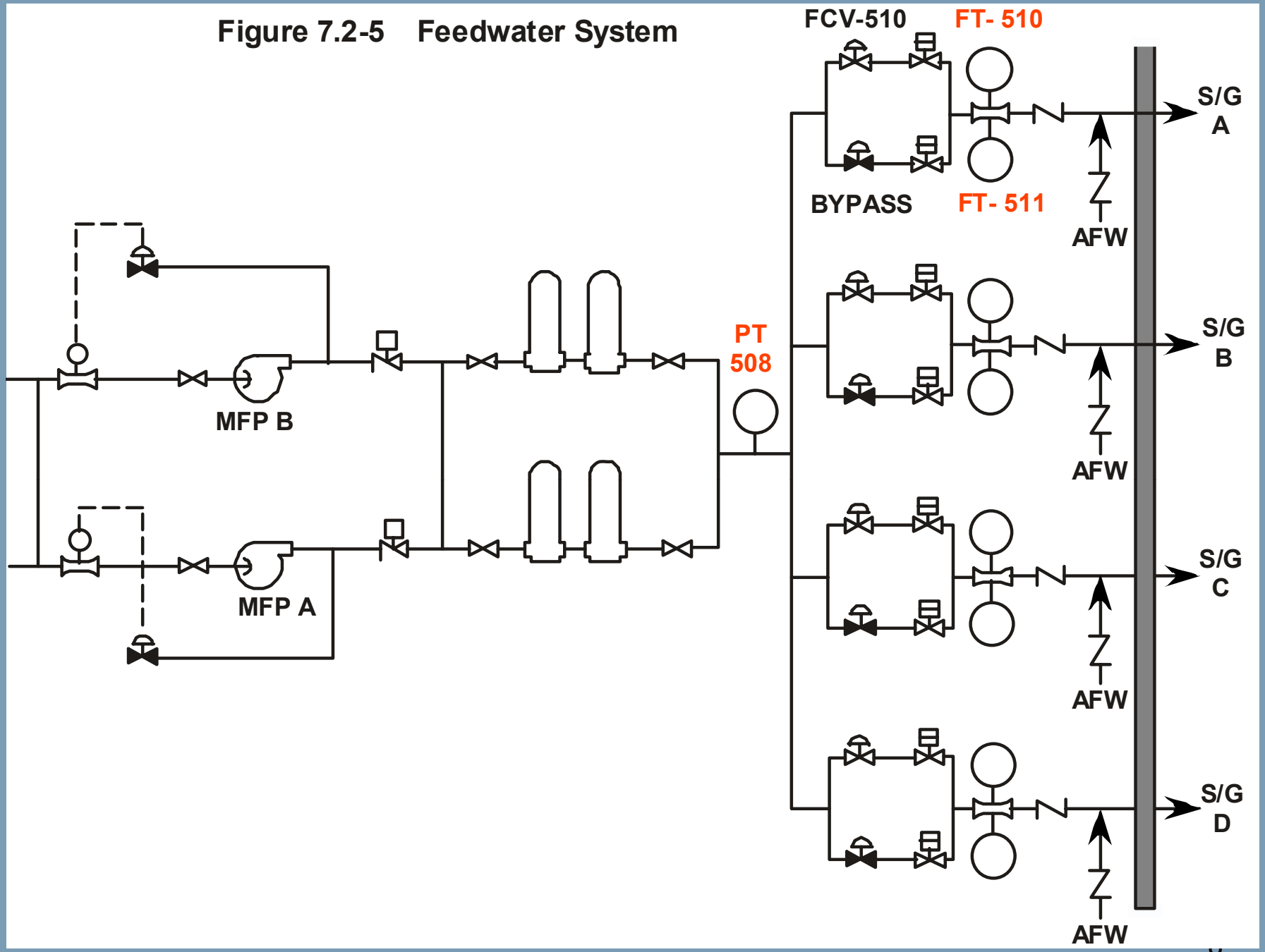

11.1.4 System Interrelationships
(Feedwater Isolation)

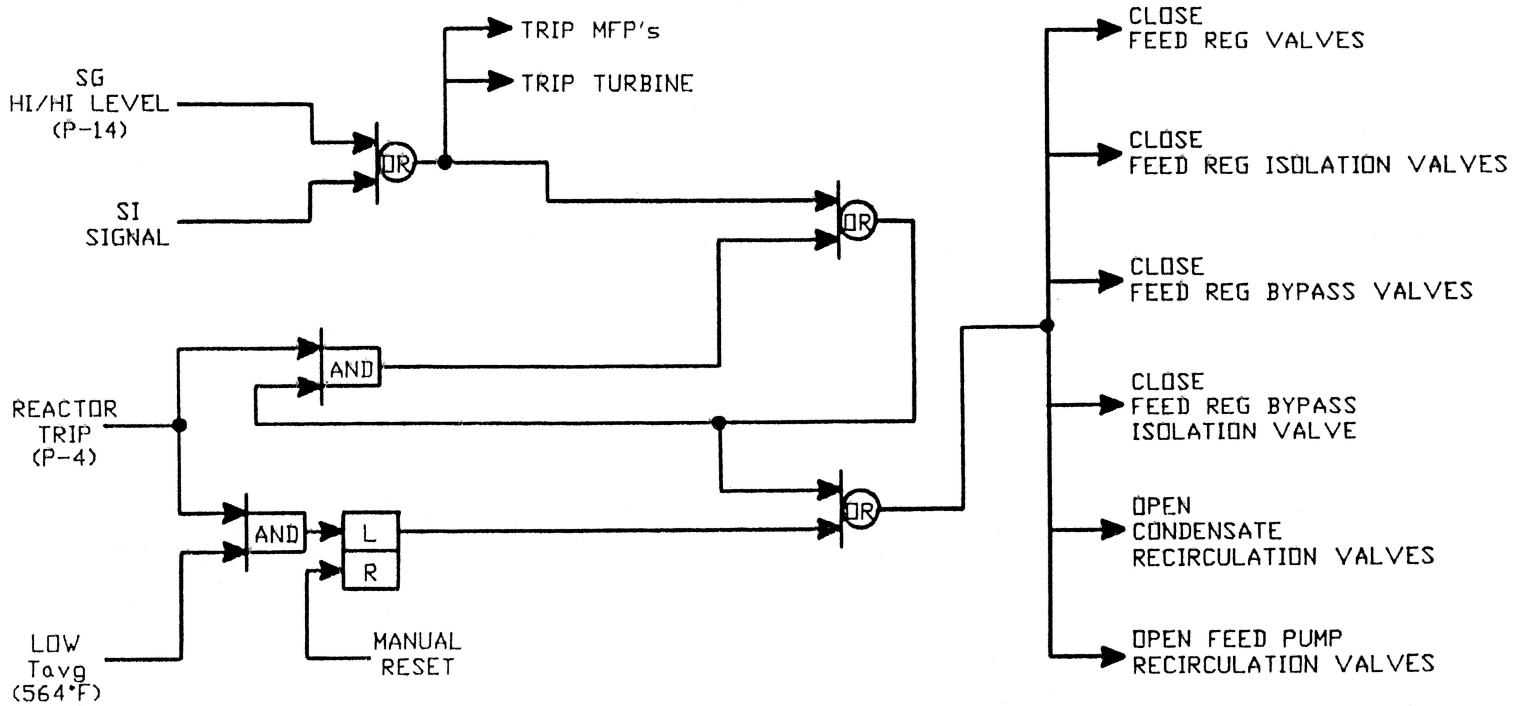

Figure 11.1-3 Main Feedwater Pump Speed Control

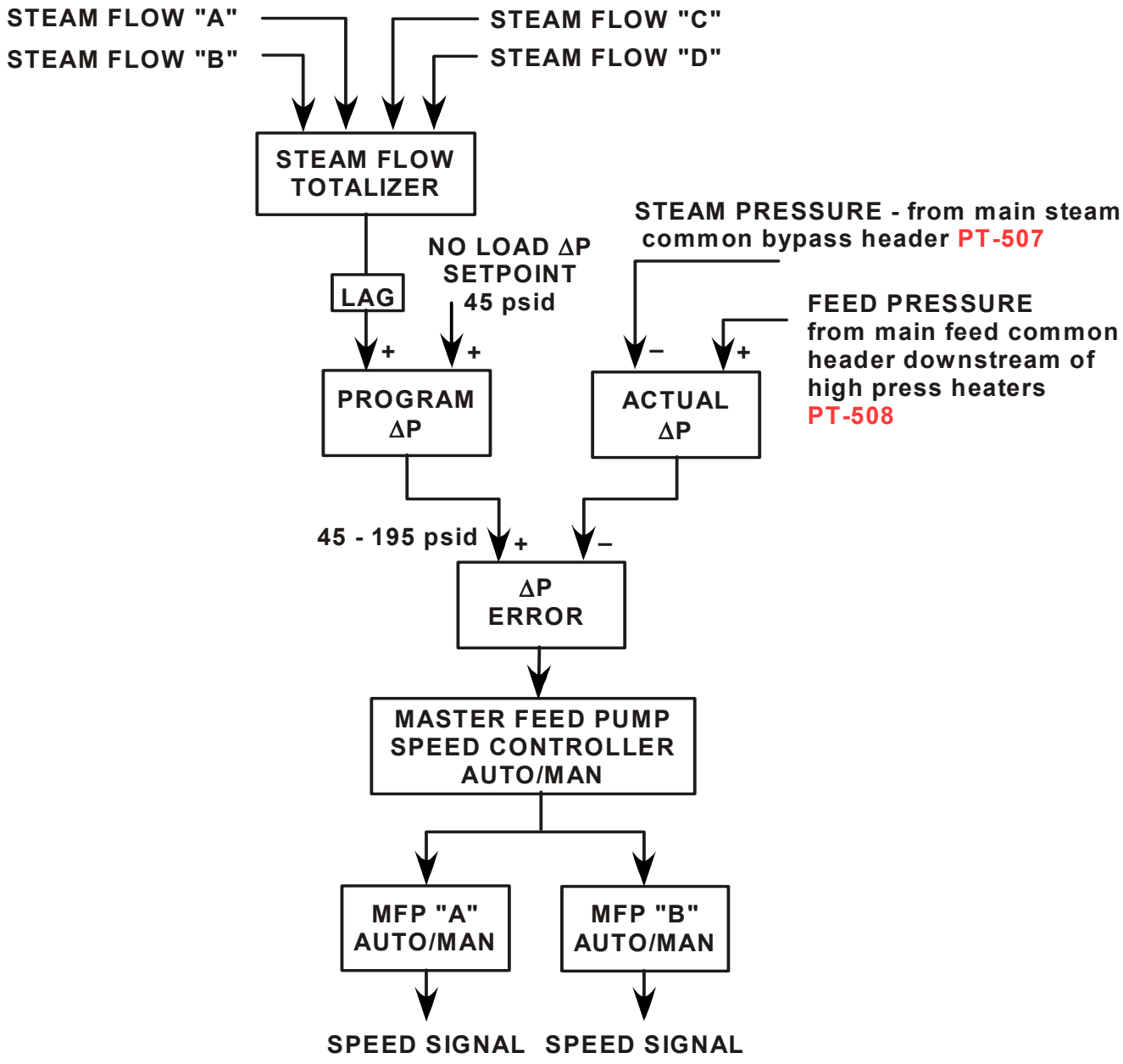

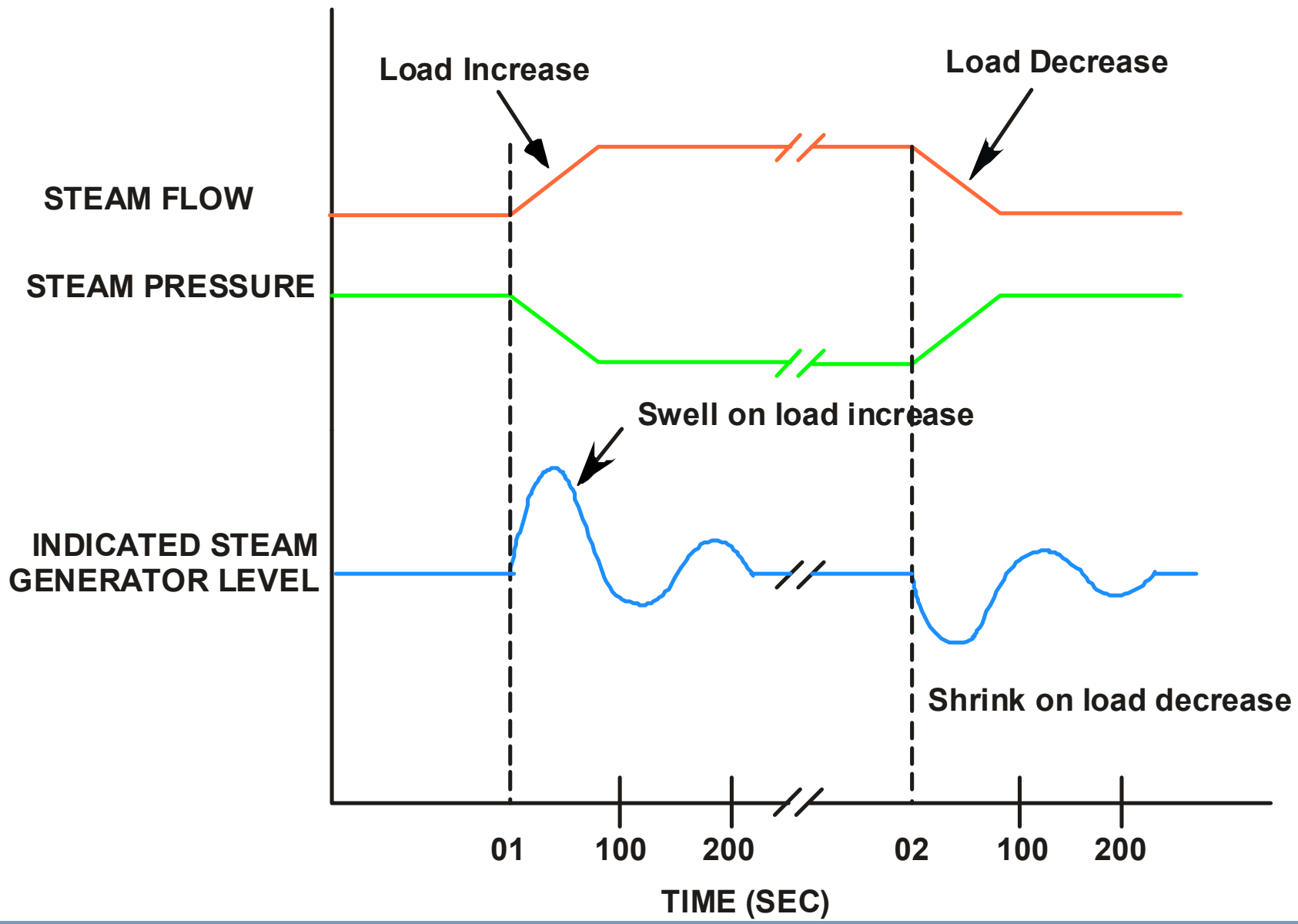
STEAM FLOW = FEED FLOW
Load Increase
Load Decrease
STEAM FLOW
STEAM PRESSURE
Swell on load increase
INDICATED STEAM GENERATOR LEVEL
Shrink on load decrease
01
100
200
02
100
200
TIME (SEC)