U.S.NRC
UNITED STATES NUCLEAR REGULATORY COMMISSION
Protecting People and the Environment

Residual Heat Removal System

Chapter 5.1

HRTD
Human Resources
Training & Development

Learning Objectives

1. State the purposes of the Residual Heat Removal (RHR) System.

2. Describe the RHR system flow path including suction supplies, discharge points and major components during decay heat removal.

3. Describe the normal, at-power line-up of the RHR system.

Learning Objectives

4. Explain why Reactor Coolant System (RCS) pressure and temperature limits are placed on the initiation of RHR cooldown.

5. Explain how the RHR system is protected against over pressurization.

6. Explain how an intersystem LOCA is initiated in the residual heat removal system and what affect it can have on long-term core cooling.

RHR System Purposes

1. Removes decay heat from the core and reduces the temperature of the RCS during the second phase of plant cooldown.

2. Serves as the low pressure injection portion of the Emergency Core Cooling System (ECCS), following a loss of coolant accident.

3. Transfers refueling water between the refueling water storage tank and the refueling cavity before and after refueling.

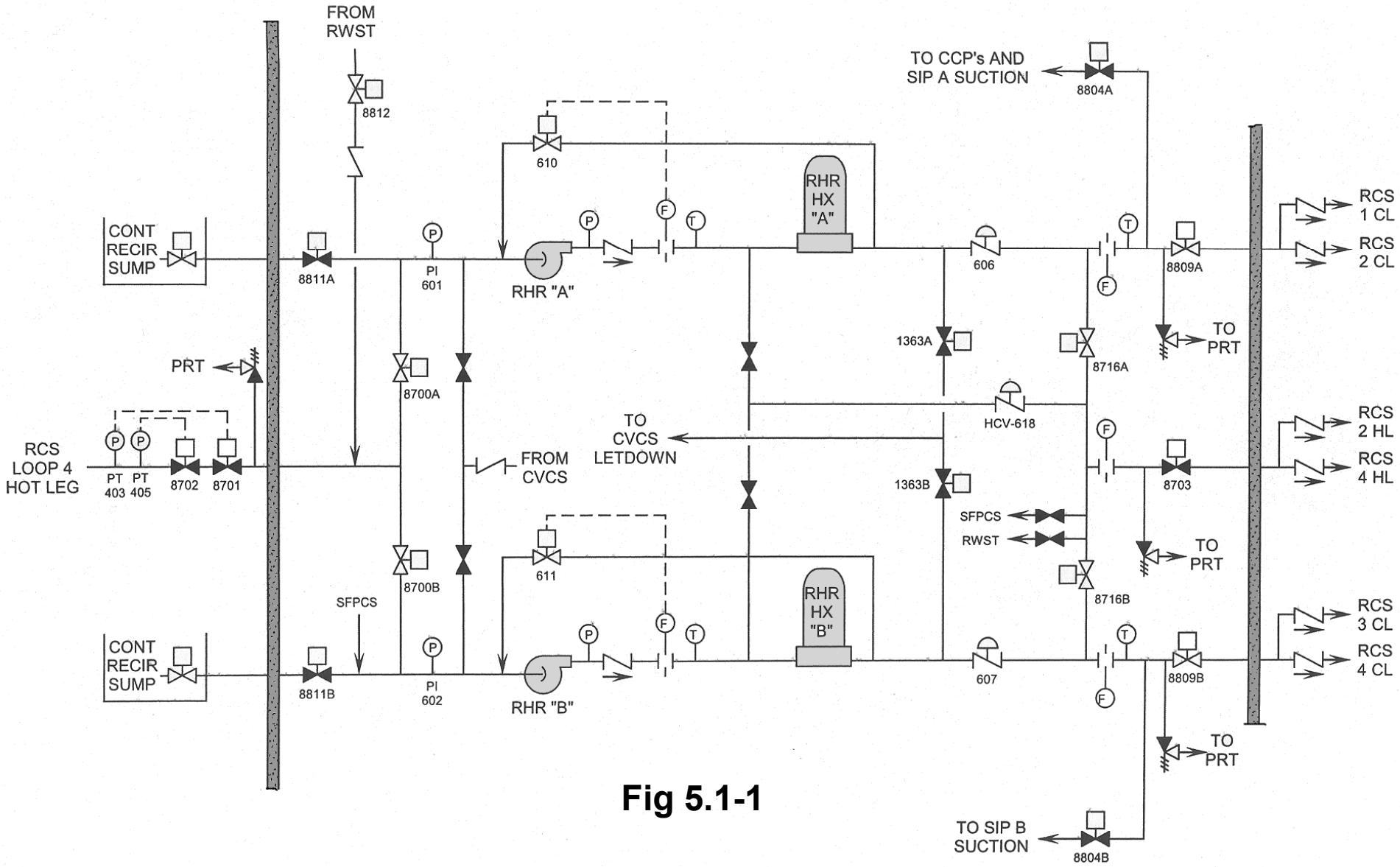
FROM RWST
8812
TO CCP's AND SIP A SUCTION
8804A
610
RHR HX "A"
CONT RECIR SUMP
8811A
PI 601
RHR "A"
606
8809A
RCS 1 CL
RCS 2 CL
1363A
8716A
TO PRT
PRT
8700A
HCV-618
TO CVCS LETDOWN
RCS LOOP 4 HOT LEG
PT 403
PT 405
8702
8701
FROM CVCS
1363B
8703
RCS 2 HL
RCS 4 HL
SFPCS
RWST
TO PRT
8700B
611
8716B
SFPCS
RHR HX "B"
CONT RECIR SUMP
8811B
PI 602
RHR "B"
607
8809B
RCS 3 CL
RCS 4 CL
TO PRT
TO SIP B SUCTION
8804B

Fig 5.1-1

Figure 5.1-2, Solid Water Ops

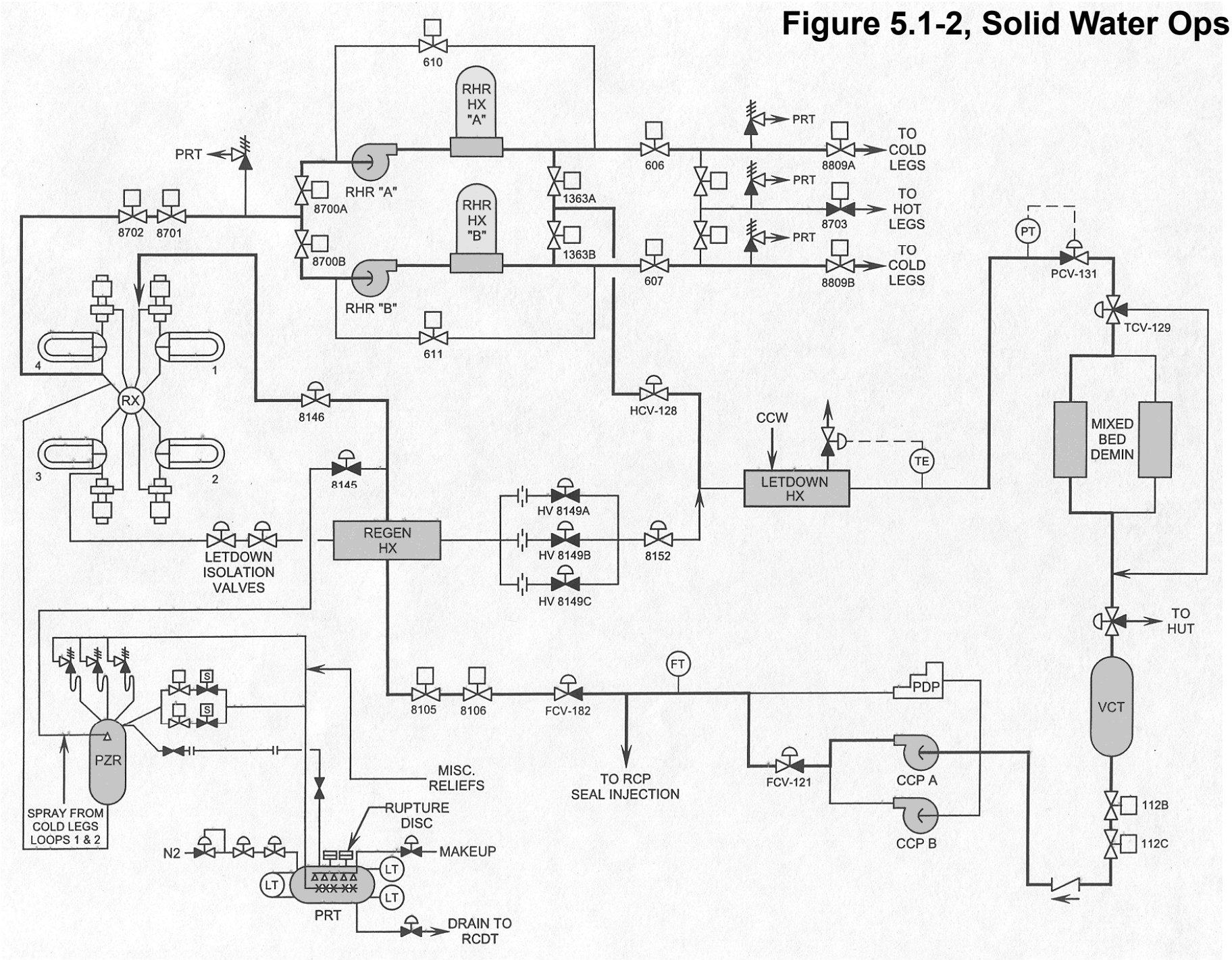

Intersystem LOCA

- Safety concern since coolant is being lost outside Containment.
- Coolant would not be available for Containment sump recirculation.
- The intersystem LOCA is a small contributor to core damage frequencies at Westinghouse PWRs