U.S.NRC

United States Nuclear Regulatory Commission

Protecting People and the Environment

Integrated Control System (ICS)

Chapter 9.0

B&W Cross-Training Course

R-326C

HRTD

Human Resources Training & Development

OBJECTIVES

1. Explain the function of the following ICS subassemblies:
   a. Unit Load Demand (ULD)
   b. Integrated Master (IM)
   c. Feedwater Demand
   d. Reactor Demand
2. Define the following terms:
   a. Track
   b. Runback
   c. Cross limits

OBJECTIVES

3. With the use of a block diagram of the ICS, discuss the following:
   a. Normal power increase & decrease.
   b. Runbacks.
   c. Cross limits.
   d. Placing an ICS hand/auto station in manual (hand).
   e. Turbine trip.

Integrated Control System (ICS)

- Provides simultaneous control of:
  - Turbine load (MWe)
  - Turbine bypass valves & atmospheric dump valves.
  - Feedwater control valves
  - MFP speed
  - Control rod position
- Allows plant to automatically maneuver from 15% - 100%.
  - Up to 5% per min.

Integrated Control System

- Basic function is to match generated electrical megawatts with demanded electrical megawatts.
- ICS helps maintain a balance between heat generation & heat removal.
- Many “adjusting” features:
  - RCS can be operated with unequal loop flows.
  - OTSGs do not have moisture separation equipment and must superheat steam sufficiently.

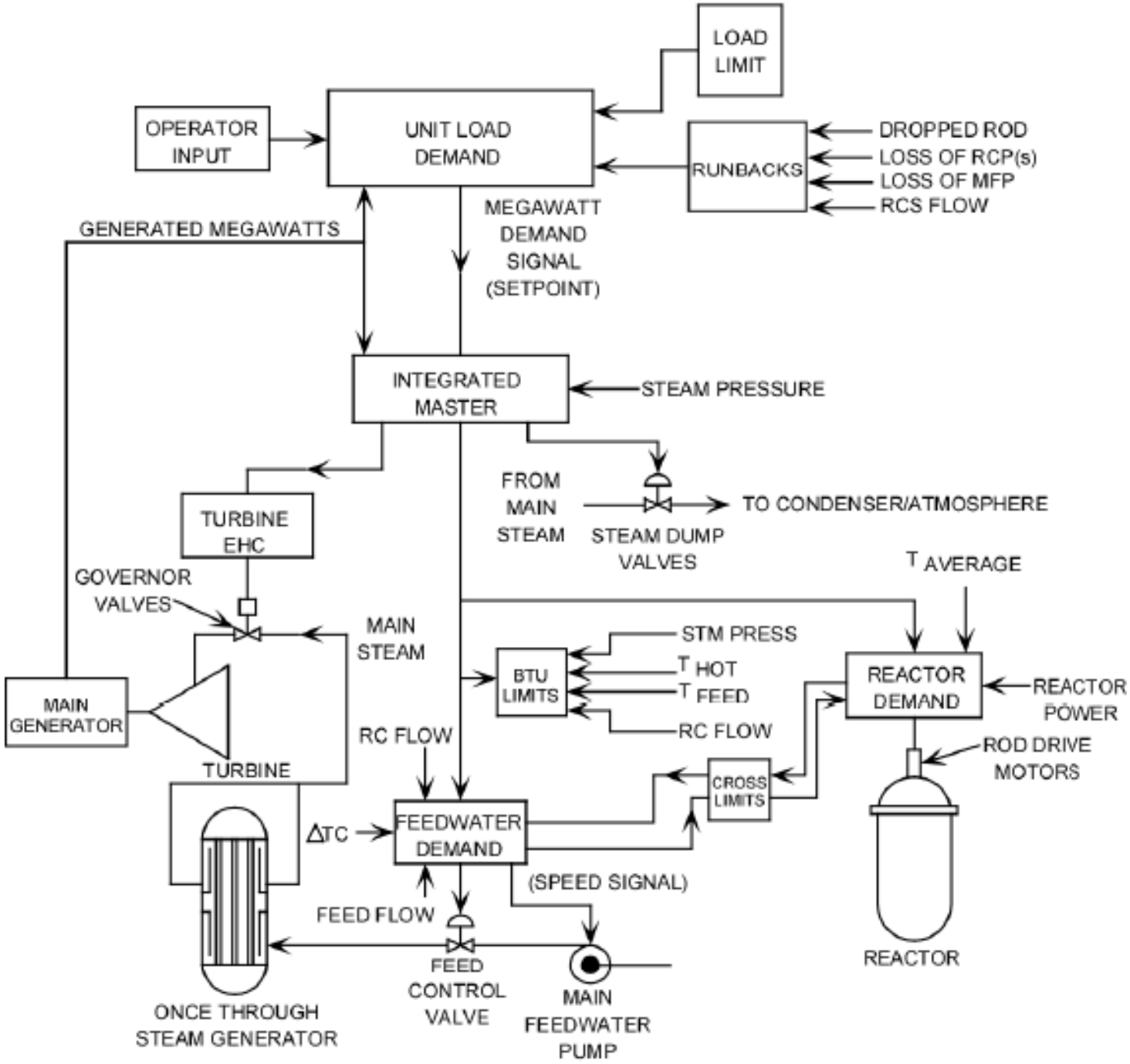

Simplified Integrated Control System Fig. 9-1

Definitions

- Runback – an automatic reduction in plant load when necessary power generation equipment is lost or its capacity is reduced.
  - Reduces load to a preset value at a predetermined rate.
- Cross Limits –
  - Act to help maintain a balance between heat generation (Rx Power) & heat removal (FW Flow).
  - Normally only a factor during rapid load changes or transients.
  - If Rx demand signal differs from Rx power by >5%, FW demand is adjusted. If FW demand exceeds total FW flow by >5%, then Rx demand is reduced.
- Track – a condition in which actual generated MWe is substituted for the demanded MWe signal

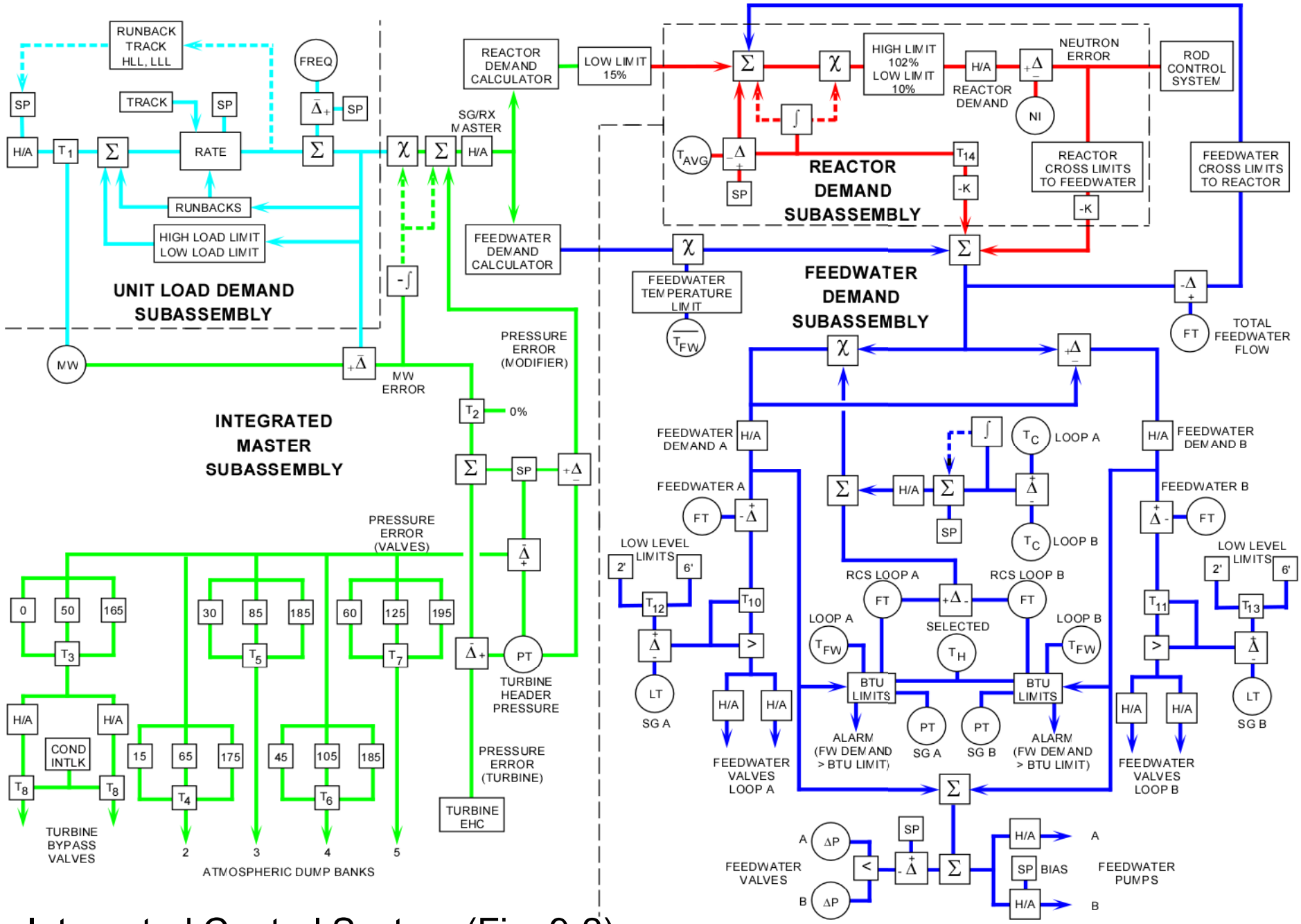

Integrated Control System (Fig. 9-2)

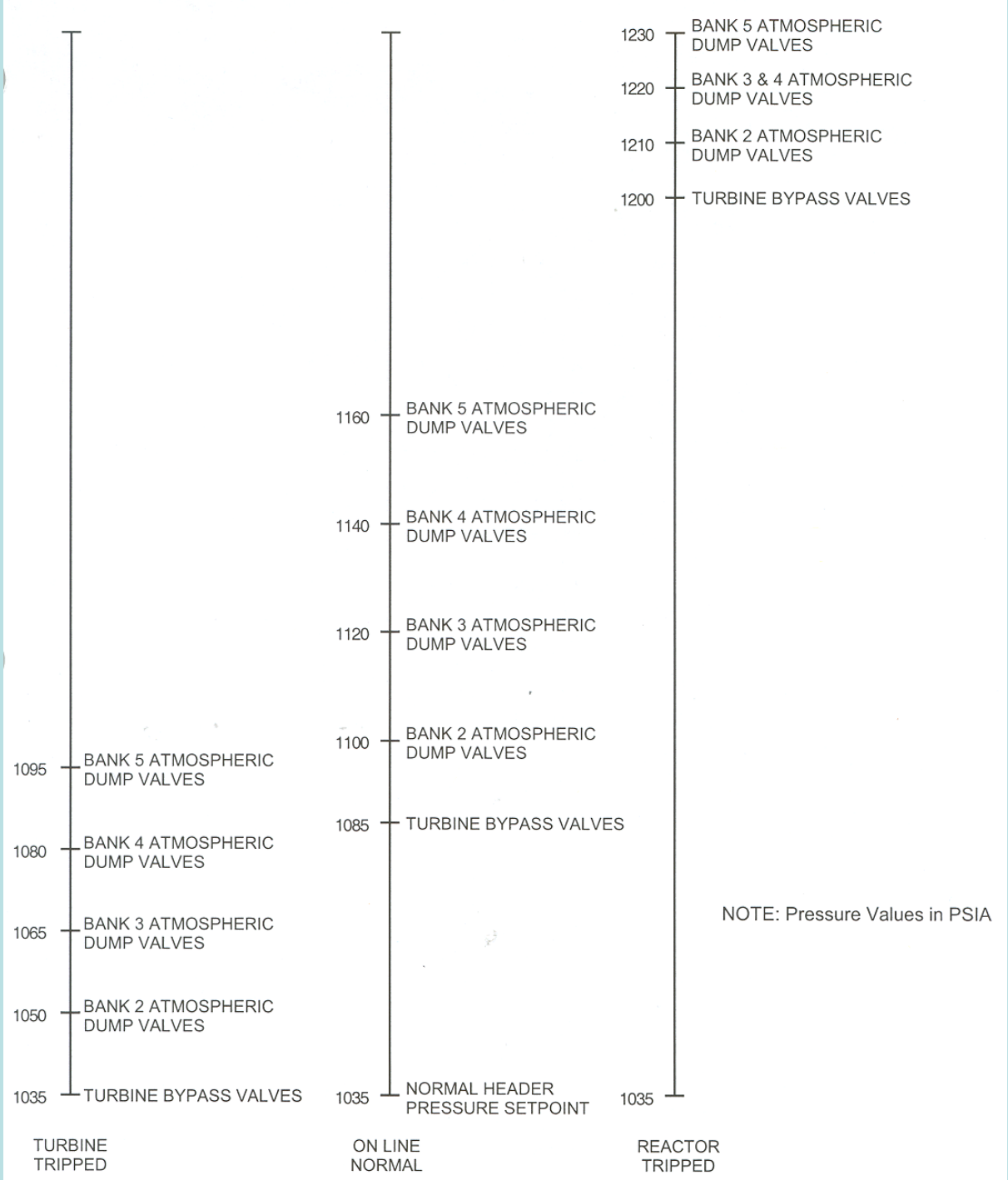

TBVs/ADVs Setpoints Fig. 9-3

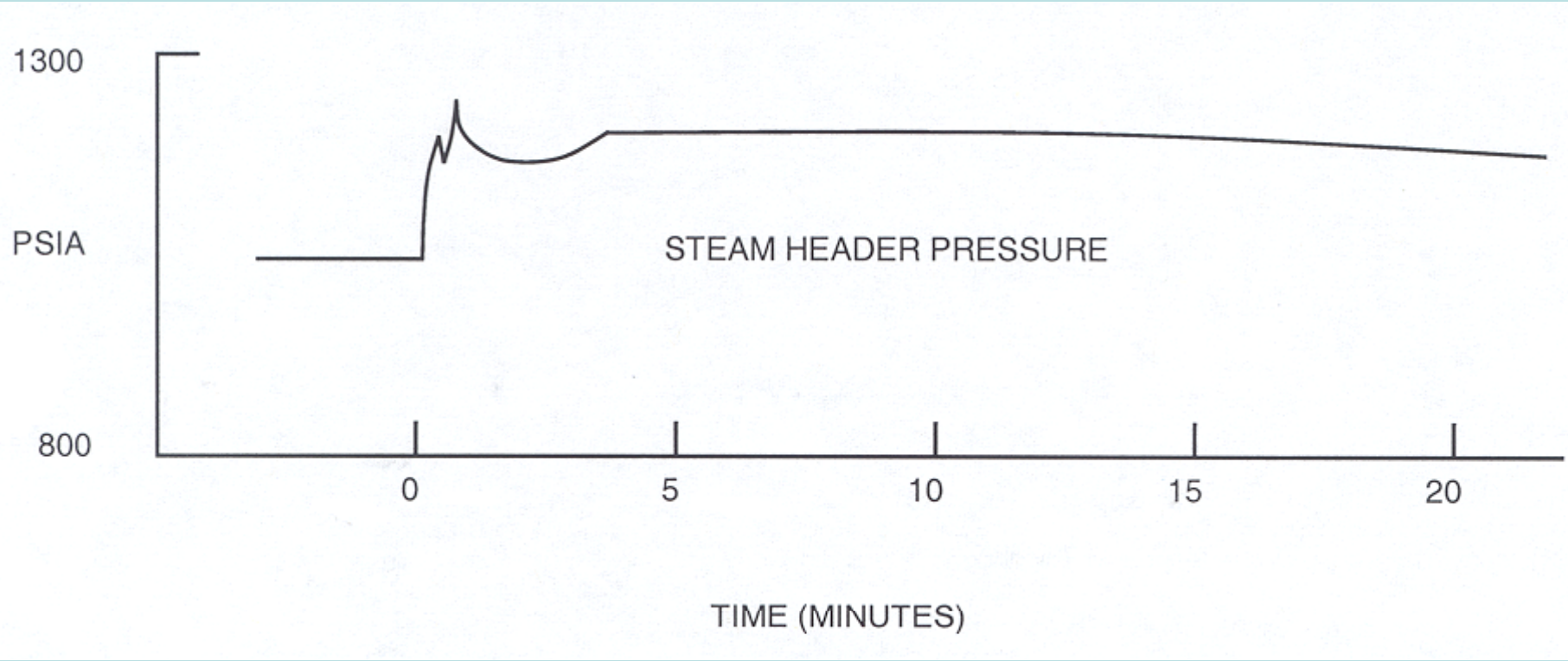

Response of Steam Pressure on a Reactor Trip (Fig. 9-4)

Feedwater Temperature vs. Steam Flow
Fig. 9-5

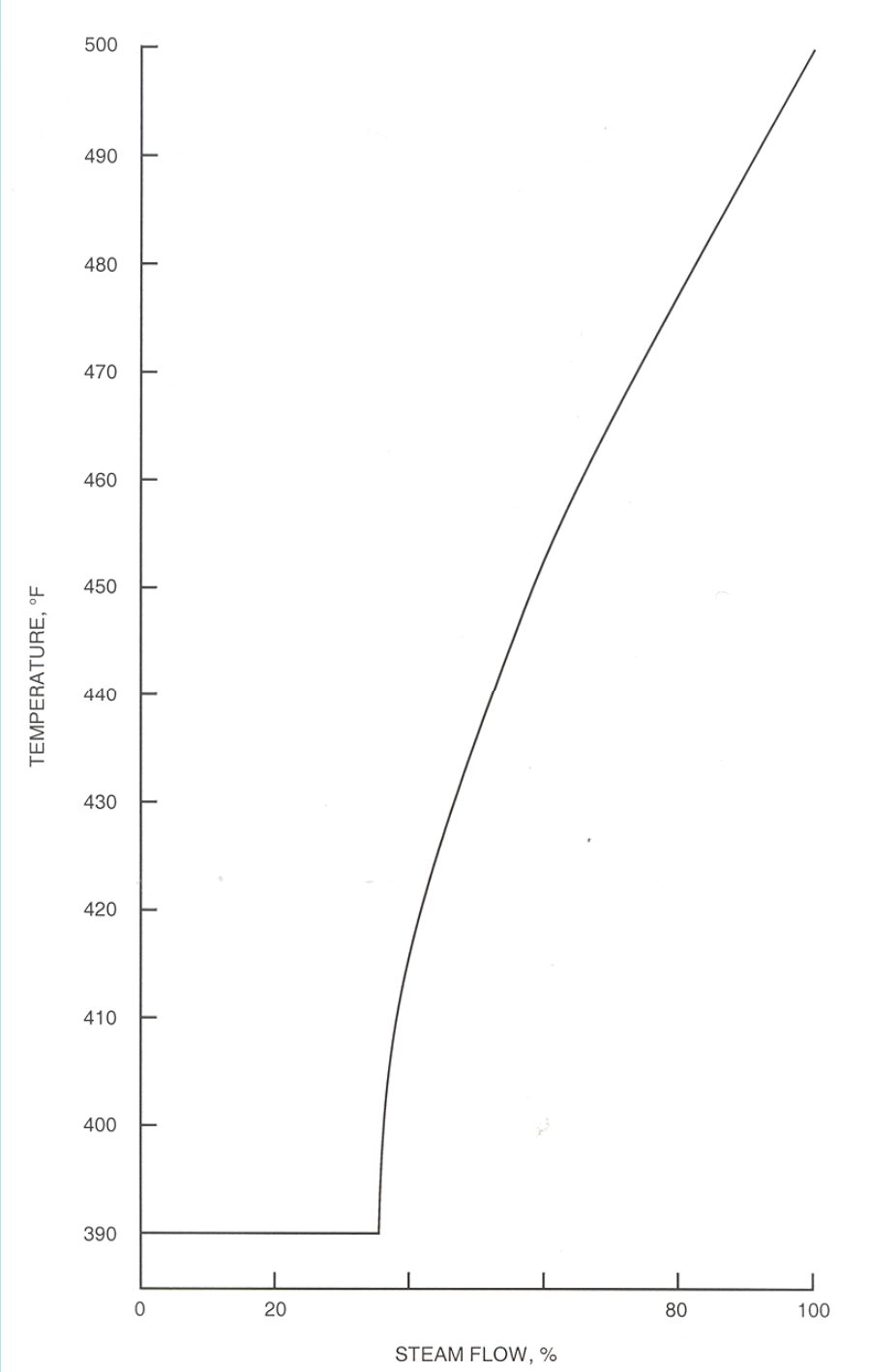

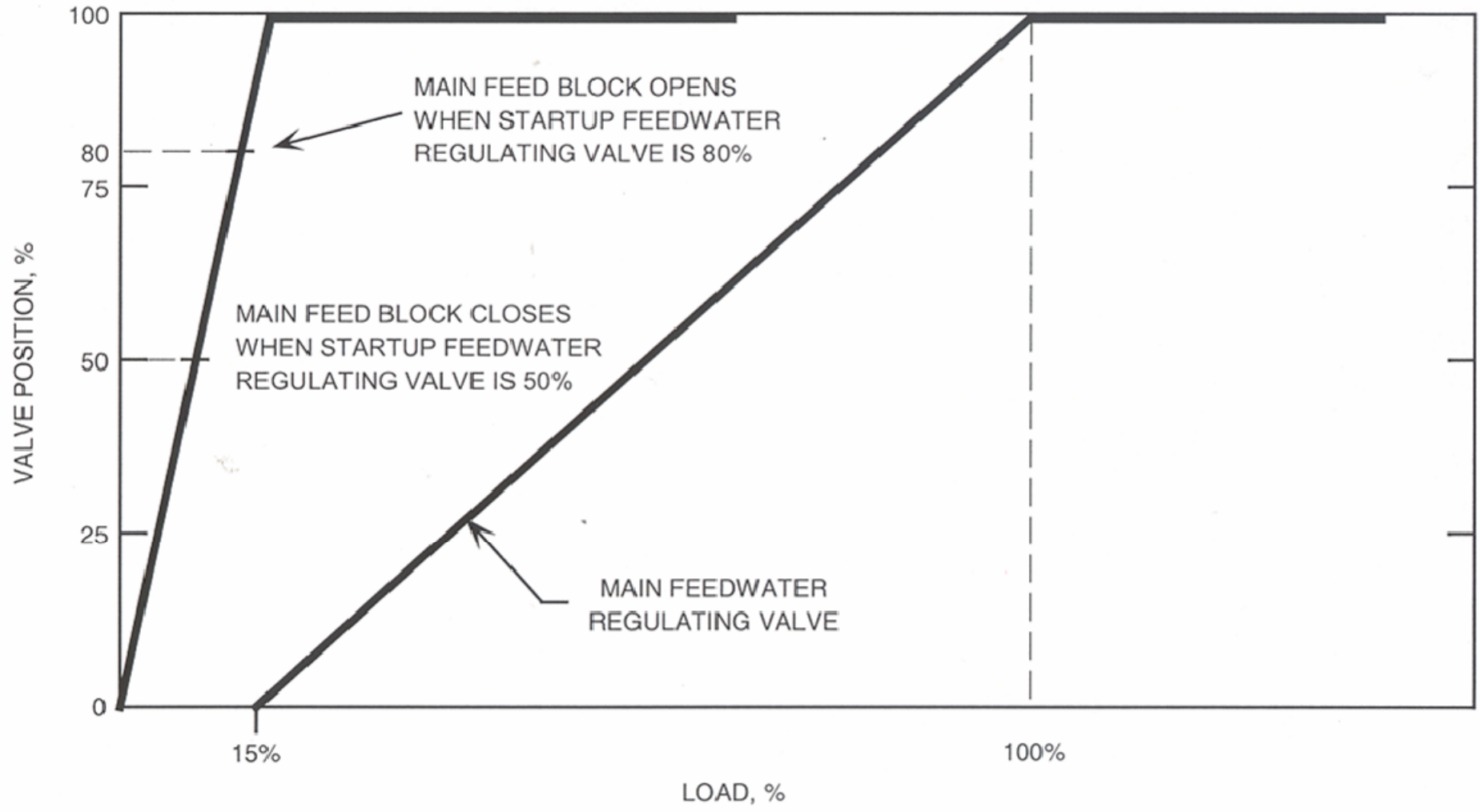

Feedwater Regulating Valve Sequence (Fig. 9-6)

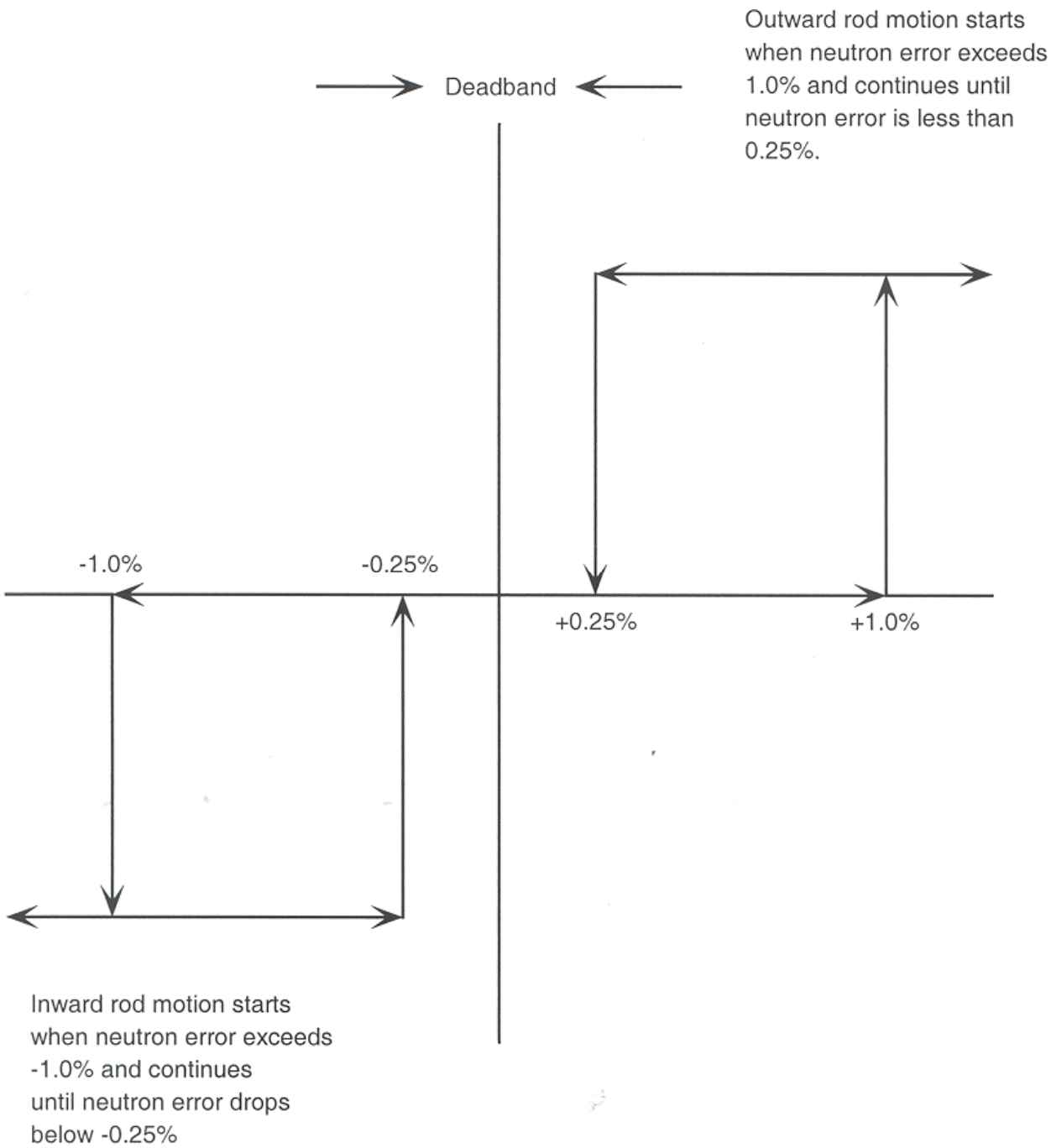

Rod Motion VS. Neutron Error Fig. 9-7

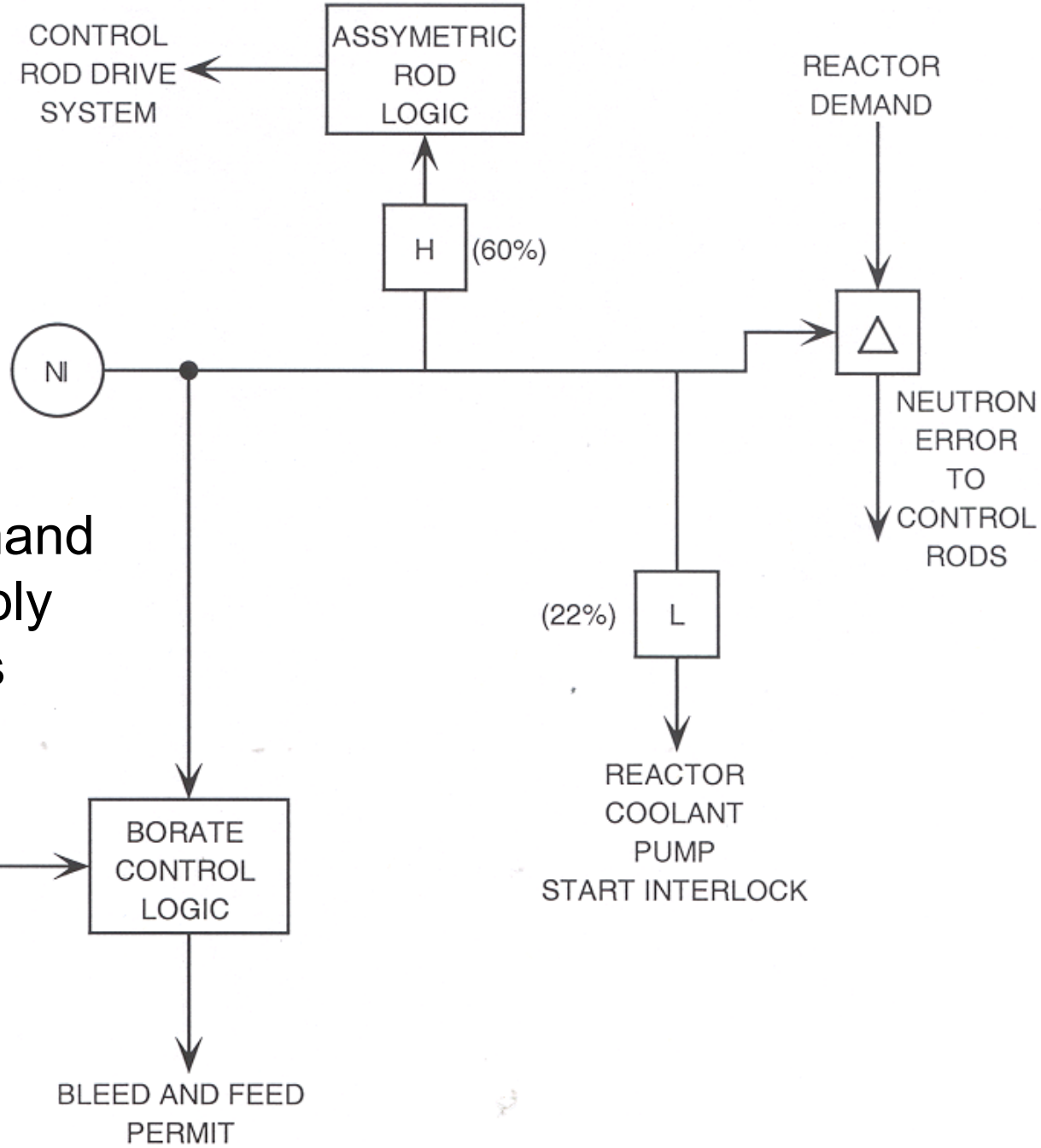

Reactor Demand Subassembly Interlocks Fig. 9-8

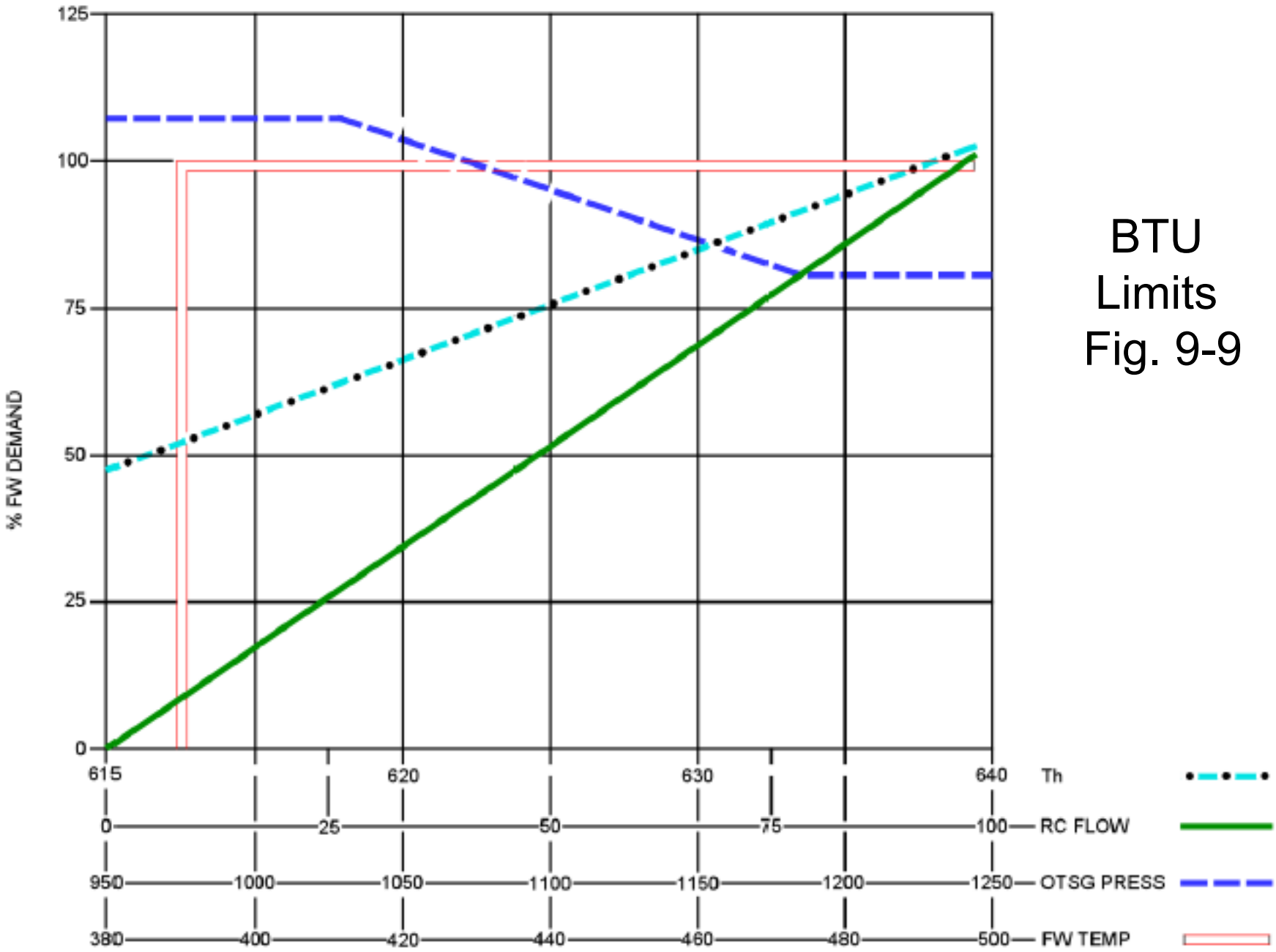

BTU Limits Fig. 9-9

Table 9-1
Runback Conditions

Condition	Runback Rate	Maximum Load Value
Loss of an RCP	50%/minute	75% generated Mw
Loss of 2 RCPs	50%/minute	50% generated Mw
Loss of a MFP	50%/minute	60% generated Mw
Asymmetric Rod	30%/minute	60% generated Mw
RCS Flow (Total Core Flow)	20%/minute	Value required to maintain correct power/flow ratio

Table 9-2 (Item 1)
Unit Load Demand Tracking Relay

1. Unit load demand tracking relay - T_1

   a. Normal condition - passes the megawatt demand signal from the Unit Load Demand hand/automatic station to the remainder of the integrated control system.

   b. In TRACK - the value of actual generated megawatts is transferred to the remainder of the integrated control system as the demand signal. The following conditions cause TRACK:

      (1) reactor trip
      (2) generator output breakers open
      (3) electro-hydraulic control in manual
         (a) turbine trip
         (b) turbine in other than ICS control
      (4) Diamond rod control station in manual
      (5) major integrated control system hand/automatic stations in manual
         (a) reactor demand
         (b) steam generator/reactor master
         (c) both loop A and B feedwater demands
      (6) feedwater flow greater than feedwater demand by 5%
      (7) reactor or feedwater cross limits

Integrated Master Tracking Relay: T_2
Item 2

a. Normal condition - allows header pressure setpoint modification.
b. In TRACK - bleeds setpoint modification to zero (no modification) through an R-C network with a time constant of 100 sec.

Table 9-2, Item 3
TBV/Atmospheric Dump Valve Bias Selection

3. Bias selection - T_3, T_4, T_5, T_6, and T_7

   a. Always selects reactor trip bias when the reactor is tripped.

   b. When the reactor is not tripped, selects turbine trip bias when:
      (1) the turbine is tripped
      OR
      (2) normal bias criteria are not met.

   c. When the reactor and turbine are not tripped, selects normal bias when:
      (1) turbine bypass valves are closed AND header pressure error is < 10 psi
      OR
      (2) unit load demand >15%.

Table 9-2, Item 4

4. Condenser interlock - T_8

   a. Normal condition - passes pressure error (minus bias value) signal to turbine bypass valves.
   b. Closes turbine bypass valves if the following conditions exist:
      (1) low circulation water flow
      (2) condenser pressure higher than setpoint

FW Demand Reactor Trip Transfer: T_{10} & T_{11} Item 5

a. Normal condition - transfers feedwater demand to feedwater regulating valves.

b. Reactor trip—transfers low level limits signal to feedwater regulating valves when the reactor trips.

FW Demand Low-Level Limit Selection Transfer: T_{12} & T_{13}, Item 6

a. 2-ft level setpoint is selected if any reactor coolant pump is running.
b. 6-ft level setpoint is selected if all reactor coolant pumps are tripped.

Rx Demand Tave Transfer T_{14}, Item 7

a. Normal condition—allows the reactor demand subassembly to control T_{avg}.

b. Feedwater control—transfers T_{avg} error to feedwater demand if <u>either</u> the reactor demand hand/automatic (H/A) station <u>or</u> Diamond rod control station is in manual;

Feedwater demand will accept T_{avg} control if:

(1) at least one once-through steam generator is not on low level limits,

AND

(2) at least one feedwater demand station is in automatic.