Pressurized Water Reactor
B&W Technology
Crosstraining Course Manual

Chapter 6.2

Control Rod Drive Control System

TABLE OF CONTENTS

6.2 CONTROL ROD DRIVE CONTROL SYSTEM 1
6.2.1 Introduction 1
6.2.2 System Description 1
6.2.2.1 Drive Mechanism 2
6.2.2.2 Motor Control System 2
6.2.2.3 System Logic Equipment 6
6.2.3 System Operations 7
6.2.3.1 Patch Panels 7
6.2.3.2 Control Rod Latching Operation 7
6.2.3.3 Mechanism Power Supply Transfer 8
6.2.4 Summary 9

LIST OF TABLES

6.2-1 Typical Control Rod Group Assignments 6
6.2-2 Control Rod Drive System Control Panel 11

LIST OF FIGURES

Figure 6.2-1 Rotating Sequence
Figure 6.2-2 Rotating Magnetic Field
Figure 6.2-3 Motor Control Diagram
Figure 6.2-4 Control Rod Drive Control System (Optical Disc Programmer)
Figure 6.2-4a Control Rod Drive Control System (Microcomputer Programmer)
Figure 6.2-5 Diamond Control Station
Figure 6.2-6 Control Rod Drive Auto Logic

This page intentionally blank.

6.2 CONTROL ROD DRIVE CONTROL SYSTEM

Learning Objectives:

1. State the purpose of the control rod drive control system.

2. State the functions of the following:

   a. Safety rods
   b. Regulating rods
   c. Axial power shaping rods
   d. Group power supply
   e. Auxiliary power supply

3. Explain how rotating motion of the control rod drive mechanism is achieved.

4. Explain the following terms:

   a. Latching
   b. Clamping

5. Explain how individual rod motion is achieved.

6. Describe how power is supplied to the control rod drive mechanism.

6.2.1 Introduction

The control rod drive control system provides for withdrawal and insertion of groups of control rod assemblies (CRAs) to produce the desired reactor power output. This function is achieved by automatic control of the system by the integrated control system (ICS) or by manual control by the operator. The controls provide shutdown capability and compensate for short-term reactivity changes by positioning the 68 CRAs and 8 axial power shaping rods (APSRs). The rods are arranged in eight groups. The first four groups consist of the safety rods, groups 5 through 7 consist of the regulating rods, and group 8 consists of the APSRs. Each of the groups may be assigned from 4 to 12 control rod drive mechanisms.

6.2.2 System Description

The control rod drive control system consists of three basic subsystems: (1) the drive mechanism, (2) the motor control system, and (3) the system logic equipment. Each subsystem is discussed in more detail in the following paragraphs.

6.2.2.1 Drive Mechanism

The drive mechanisms are four-pole, six-phase, reluctance-type mechanisms. With power applied to the mechanism, two north poles and two south poles are produced (Figure 6.2-1). The 6 electrical phases, designated A, B, C, AA, BB, and CC, are located on 12 poles in the stator. The A and AA, B and BB, and C and CC phases are in the same physical locations on the stator (wound on top of each other). Each pair is wound electrically so that, in the event they both became energized simultaneously, they will produce magnetic fields of equal and opposite polarity and cancel each other. Simultaneous energizing of winding pairs does not occur during normal operation.

The power supplied to each winding is 100 Vdc, which is rectified from three-phase 120 Vac. When power is applied to the stator, two adjacent phases are energized (A and B in Figure 6.2-1). This generates the four-pole magnetic field, causing the roller nuts to engage the leadscrew. One phase is sufficient to cause engagement, but two are used for redundancy. To hold the mechanism in a stationary position, a maximum of two phases are energized. The reason for this is to prevent possible heat damage to the stator as a result of high current flow.

Rotation of the mechanism is accomplished by alternately energizing 2 then 3 then 2 then 3 phases in a prescribed sequence. Each phase shift results in a 15° shift in the magnetic pole position and thus a 15° rotation of the mechanism. This 2-3-2-3 rotation is shown in Figure 6.2-1. One mechanical rotation of the mechanism requires two electrical rotations. The speed and direction of the mechanism is controlled by the speed and direction of the magnetic field.

De-energizing of the windings results in the loss of the magnetic field. This allows the springs located between the segment arms to push the arms apart, disengaging the roller nuts from the leadscrew and dropping the rod into the core. A dropped rod can also result from the failure of one phase while the mechanism is in motion. Refer to Figure 6.2-1. If during motion, the C phase fails to energize because of an electrical fault, steps (1) and (2) would be identical and no rotation would occur. During step (3), only one phase (B) would be energized. At this point the lines of flux would be from the B phase originally energized to the next B phase winding in the clockwise direction. In effect this causes a shorting between poles, and the lines of flux do not pass through the segment arms. This causes a reduction in the force being exerted on the segment arms by the magnetic field. When this force is reduced to the point where it no longer balances the counterforce of the segment arm springs, a dropped rod occurs.

6.2.2.2 Motor Control System

The 2-3-2-3 sequencing of the phases is accomplished by one of two types of programmed power supplies (solid state or optical disc).

1.a. Solid State Programmer

The solid state programmed power supplies consists of a microcomputer, group programmers and group gate drives. Refer to Figure 6.2-4a. The microcomputer accepts operational input commands and converts them into sequential outputs. The outputs are sent to main and secondary solid state programmers for groups 5 - 8 and the auxiliary power supply. The programmers send the command signals to the main and secondary gate drives for groups 5 - 8 and the auxiliary power supply. The gate drives either turn on (gate on) the silicon controlled rectifiers (SCRs) to pass power to the windings or gate the SCRs off and the SCRs do not pass power.

The microcomputer, programmers and gate drives work together to energize the stator windings at the proper speed and direction of rotation. The windings are sequentially energized first two, then three, then two then three of the six stator windings in stepping motor fashion, to produce a rotating magnetic field. The control rods operate at 30 in. per minute (called RUN speed) or at 3 in. per minute (called JOG speed).

The programmers and gate drives associated with the A phase, for example, are used to turn on (gate) the rectifying bank SCRs which supplies power to the A phase of the rods in that power supply group. As the SCRs are gated, they rectify 120 Vac and pass it to the stators as 100 Vdc. Thus, the 2-3-2-3 sequencing results in the sequential energizing of the stator windings from the A, B, C, AA, BB, and CC phases of a main feeder bus.

The solid state programmer will not leave three phases energized. If the mechanism stops with three phases energized, the microcomputer will send a “jog in” signal to the programmers and gate drives to step back one step to a two-phase-energized condition. This hold command remains until a new operational command is received or until power to the windings is interrupted due to a protection signal.

There are 5 programmer and gate drive circuits, one for each regulating rod group and APSRs, and one for the auxiliary power supply.

1.b. Optical Disc Programmer

The optical disc programmer uses two split-phase drive motors. Refer to Figures 6.2-2, 6.2-3, and 6.2-4. One programmer drive motor runs at 60 rpm, which gives a control rod speed of 30 in. per minute; the other drive motor runs at 6 rpm, which gives a control rod speed of 3 in. per minute (30 in. per minute is called RUN; 3 inches per minute is called JOG).

The drive motors are coupled to an optical disc. A light source is placed on one side and photodetectors on the opposite side of the slotted disc. There are two redundant light sources on one side of the disc and two redundant sets of photodetectors on the other side. Each set of photo-detectors has one detector for each of the six phases plus one detector

for the 3-2 hold circuit. As the disc is rotated by the drive motor, transparent windows on the disc pass in front of the light sources. The light passing through the windows activates the photodetectors. The windows, which are symmetric about the disc's diameter, are arranged so that redundant photodetectors are activated in the desired 2-3-2-3 sequence. The output of each photo detector is used to drive a relay that closes a contact in a 12-Vdc gate drive circuit. The gate drive associated with the A phase, for example, is used to turn on (gate) the rectifying bank (SCRs) which supplies power to the A phase of the rods in that power supply group. As the SCRs are gated, they rectify 120 Vac and pass it to the stators as 100 Vdc. Thus, the 2-3-2-3 sequencing of the photodetectors results in the sequential energizing of the stator windings from the A, B, C, AA, BB, and CC phases of a main feeder bus.

The seventh photodetector in the set energizes the 3-2 hold circuit. When the mechanism stops with three phases energized, the detector energizes a relay that causes a "jog in" signal to be sent to the programmer. The programmer steps back one step to a two-phase-energized condition. This turns off the photodetector, thus deenergizing the relay, and motion stops. There are 5 programmer circuits, one for each regulating rod group and APSRs, and one for the auxiliary power supply.

2. Power Supplies and Distribution

Power is supplied to the control rods (Figures 6.2-4 and 6.2-4a) from two separate plant sources through the AC trip circuit breakers. These breakers are designated A and B, and their undervoltage coils are powered by RPS channels A and B, respectively. From the AC circuit breakers, the control rod drive power travels through voltage regulators and stepdown transformers. These devices, in turn, supply redundant busses that feed the DC power supplies and the regulating rod power supplies.

The DC power supplies rectify the AC input and supply power to hold the safety rods in their fully withdrawn position. One supplies power to phase A and the other to phase CC. Either phase being energized is sufficient to hold the rods. Two rod drive breakers (designated C and D) are located on the output of each DC power supply. Each breaker controls power to two of the four safety rod groups. The undervoltage coils on the two circuit breakers on the output of one of the power supplies are controlled by RPS channel C, and the other two breakers are controlled by RPS channel D. (The RPS treats the two DC rod drive circuit breakers on the output of each power supply as one breaker.) In order to withdraw the safety rods during a startup, each group is individually transferred to the auxiliary power supply (described later). Once the safety group is fully withdrawn, it is returned to the DC power supplies.

In addition to the DC power supplies, the redundant buses also supply power to the regulating group and auxiliary power supplies. The regulating group power supplies provide motive power to the regulating rods and the APSRs. The auxiliary power supply can provide power any rod or any group of rods. The power supplies consist of SCRs that

are gated on by a solid state system or programming lamps. The SCRs (6 per phase, 36 total per power supply) as well as the solid state system or programming lamps are redundant. If power is removed from the solid state system or the programming lamps, gating power is lost to the SCRs, and they cease to supply power to the regulating rods.

The Vdc control power to the main and secondary gate drives of the solid state system is supplied through contactors (E and F) which are controlled by RPS power. Contactor E is controlled by RPS channel C, and the contactor F is controlled by RPS channel D. Additionally, contacts controlled by the Diverse Scram System (DSS) will open to remove gating power to the SCRs. (The DSS will be discussed later in Section 10.1, Reactor Protection System.)

Programming lamp power is supplied through contactors (E and F) which are controlled by RPS power. One of the redundant programming lamp supplies is controlled by RPS channel C, and the other supply is controlled by RPS channel D.

The main AC trip breaker and DC rod drive breakers are in series in one of the power supplies and the secondary AC trip breaker and DC rod drive breakers are in series in the other power supply to the control rods. The logic required to cause a reactor trip is the opening of a circuit breaker in each of the redundant power supplies. This is known as a one out of two used twice logic. The following examples will illustrate the operation of the reactor trip circuit breakers:

If only the main or “A” AC trip breaker opens:

a. The input power to the associated DC power supply is lost and the “A” phase to the safety rods de-energize.

b. The SCR supply from the main power source is lost and the main power supply to the regulating rods de-energize.

c. The reactor does not trip because the rod windings remain energized by the secondary power supplies.

If only the secondary or “D“ DC rod drive breakers and F contactor open:

a. The output of the secondary DC power supply is lost and the “CC” phase to the safety rods de-energize.

b. When the F contactor opens, gating power to the secondary SCRs is lost to the regulating rods.

c. The reactor does not trip because the rod windings remain energized by the main power supplies.

The combination of the opening of the “A” AC trip breaker, the “D” DC rod drive breaker, and the F contactor causes a reactor trip. Any other combination of at least one circuit breaker opening in each power supply will cause a reactor trip.

The 120 Vac is provided to the control rod drive system power cabinets from the Class 1E power distribution cabinets. The 120 Vac is used for relay and contact operation and is also transformed into the following DC voltages:

(a) ±15Vdc - for digital logic components
(b) ±15Vdc - for analog circuit components
(c) ±12Vdc - for SCR firing circuits

Each DC power supply is redundant, with one power supply operating and one in standby at 80% of required voltage. A loss of the operating power supply will automatically bring the standby source into operation at full voltage.

6.2.2.3 System Logic Equipment

The system logic equipment contains circuits that receive either manual or automatic control signals (commands) and perform logic functions required to transmit commands to the motor control equipment. Rod grouping, position and limit display (Section 6.3), operator control switches, and system status indications are all part of the system logic.

Rod Grouping

The mechanisms are divided into eight separate groups (Table 6.2-1). Each group corresponds to a symmetrical arrangement of control rods. The control rods are normally moved together as a group, but provisions are made to enable movement of individual rods within a group.

The first four groups (1-4) are called safety rods. During normal at-power operations, they are maintained at their full-out position. Their function is to provide adequate shutdown capability on receipt of a reactor trip signal. The safety groups operate in manual only.

The regulating rods (groups 5-7) are used to establish criticality and to control the power output of the core. During a

Table 6.2-1
Typical Control Rod Group Assignments

Group	Number of Rods
1	8
2	12
3	8
4	8
5	12
6	12
7	8
8	8

reactor startup, groups 1-4 are 100% withdrawn. The regulating rods are then withdrawn in manual, starting with group 5 and continuing in sequence (groups 5, 6,and 7). Overlapping of the rods, to maintain a smooth reactivity addition rate, is accomplished by starting group 6 withdrawal when group 5 is 75% withdrawn and starting group 7 when group 6 is 75% withdrawn. Automatic rod operation can be selected when the necessary conditions are met and an auto inhibit signal is not present (Figure 6.2-6). Proper sequencing and overlapping of the regulating groups are maintained in manual and automatic by the logic system.

Group 8 (APSRs) is controlled manually at the control panel with the system either in manual or automatic.

Control Panel

The control panel (Diamond control station) is part of the operator's console (Figure 6.2-5). The panel contains controls, indicators, and switches required to place the control system in its various modes of operation. The panel also contains indicator lamps that display the system operational status.

A detailed explanation of control panel selector switches, indicating pushbuttons, and indicating lights is given in Table 6.2-2.

6.2.3 System Operations

6.2.3.1 Patch Panels

Patch panels located in the control rod drive cabinets allow the assignment of any drive unit, except those in group 8, to any group. This is accomplished by exchanging the power and instrumentation cables associated with the particular drives. In this way core life may be extended by exchanging certain control rods between, or within, the safety and regulating groups.

Patching of control rods is accomplished by authorized personnel only. Entry into the patch plugs is through a door with an administratively controlled keylock latch.

6.2.3.2 Control Rod Latching Operation

To ensure proper engagement (latching) of the roller nut assembly with the lands of the leadscrew, before the control rod is withdrawn:

1. The SINGLE SELECT switch is positioned to ALL to latch a whole group, or to the desired rod number if an individual rod is to be latched.

2. The GROUP SELECT switch is positioned to the desired group to be latched.

3. The system must be in the GROUP, MANUAL, and SEQUENCE BYPASS modes. This enables manual operation of the group.

4. JOG speed is selected.

5. The IN LIMIT BYPASS pushbutton is depressed and held to allow mechanism operation at the IN LIMIT.

6. The INSERT/WITHDRAW switch is placed in the INSERT position, and the mechanism(s) are operated in the insert direction for 30 sec to ensure proper engagement.

7. The IN LIMIT BYPASS pushbutton is released, and the group can now be withdrawn when desired.

6.2.3.3 Mechanism Power Supply Transfer

For a mechanism power supply transfer, assume regulating group 5 is to be transferred from its group power supply to the auxiliary power supply. The sequence of transfer consists of the following major steps:

1. Transfer Enable

   A transfer enable condition must exist in order to proceed to the next step (sync). Once a group has been transfer enabled, the transfer logic is locked into that group. Transfer operations on another group are prevented until this lock-in is cleared. The transfer enable condition exists when:

   a. The GROUP SELECT switch is in position 5.

   b. Operational modes selected are MAN-UAL, SEQUENCE BYPASS, and AUXILIARY.

   c. The group is "sealed" to the auxiliary power supply by depressing the TRANSFER RESET pushbutton. This prevents any other group from transferring to the auxiliary power supply. Note: The green TRANSFER RESET backlight is now off.

2. Sync

   Once the transfer enable is completed, JOG speed is selected. This results in the sending of the group's phase outputs to the synchronizer and the display lights on the control panel. The lamps corresponding to the two energized phases will be illuminated. Because the auxiliary mode is selected, the auxiliary power supply

outputs will be sent similarly to the synchronizer and indicating lights. Synchronization is accomplished by rotating the auxiliary programmer with the INSERT/WITHDRAW switch until the energized phases match. When all phases are matched, the synchronizer puts out a sync enable signal. This, in addition to being in the AUX and JOG modes, produces a sync confirm signal, which illuminates the SYNC CONFIRM light and sends a sync signal to the clamp logic.

3. Clamp

   Clamping prevents possible damage to the transfer relays by ensuring the voltages on the two power supplies are equalized. This is accomplished by the closing of clamping contactors, which place the two power sources in parallel. The clamping contactors close when the following conditions exist:

   a. transfer enable
   b. sync signal
   c. depressed CLAMP pushbutton

4. Manual Transfer

   The group or rod to be transferred has been selected using the SINGLE SELECT switch. (In our example ALL is selected.) When the MANUAL TRANSFER pushbutton is depressed, a transfer pulse is sent to all the selected transfer relays. These relays cause their associated transfer switches to change position. When one or more transfer switches align to the auxiliary power supply, the TRANSFER CONFIRM pushbutton is illuminated. The clamping contactors are then opened by pressing the CLAMP RELEASE pushbutton. This action completes the transfer. Transfer from the auxiliary power supply back to the group power supply requires a similar sequence of steps, but when the transfer is completed (TRANSFER CONFIRM light out), GROUP mode should be selected to clear the transfer logic. Transfer operations with any other group or rod cannot be performed until this is done.

6.2.4 Summary

The control rod drive system is used to produce and control the rotating magnetic field in each control rod drive mechanism. The mechanism itself is a six-phase, reluctance-type motor. The six electrical phases are energized in a 2-3-2-3 order to produce the rotating field. Energizing the windings, in addition to causing the rotating field, also moves the roller nut assembly to engage the leadscrew. Any interruption of the power supply causes the roller nut assembly to disengage from the leadscrew (a reactor trip).

The power to each mechanism is transformed and rectified to 100 Vdc. The sequencing of the power to the phases is accomplished using a solid state or optical disc

programmer system which gates (turns on) and ungate SCRs in the supplies to the mechanisms.

The rods are divided into three groups: safety, regulating, and axial power shaping rods (APSRs). During normal operations the safety rods are full out, and the regulating rods are withdrawn/inserted in a 5-6-7/7-6-5 sequence either manually, or in automatic by the integrated control system. The APSRs are controlled manually by the operator to even the flux distribution.

Control rods are assigned to their groups at the patch panels located in the rod drive cabinets. Rod group changes usually occur around mid-cycle to extend the core cycle.

TABLE 6.2-2 CONTROL ROD DRIVE SYSTEM CONTROL PANEL

Switches/Pushbutton Lights	Description	Notes
INSERT/WITHDRAW	Manual control switch is used to insert/withdraw any rod or groups of rods in the MANUAL mode of operation. The switch is used for synchronizing the auxiliary power supply to the group power supply for transfer to/from the auxiliary power supply.	In SEQUENCE mode, regulating rods can be inserted/withdrawn manually and in sequence.
SINGLE SELECT	The switch is used to select one or more rods in a group to transfer to/from the auxiliary power supply. By selecting ALL, the entire rod group can be transferred.	The switch can be used to reset one or more rod position indication indicators (Chapter 6.3).
GROUP SELECT	The switch is used to select any group (1-8) to be operated manually using the INSERT/WITHDRAW control switch. Select group 8 to operate manually. Positions 1-7 allow sequence operation of regulating rods. The switch is used in conjunction with the SINGLE SELECT switch to transfer to/from the auxiliary power supply.	The system is in MANUAL and SEQUENCE BYPASS mode. The system is in AUTOMATIC or MANUAL mode. The system is in SEQUENCE MANUAL or AUTOMATIC mode.

Switches/Pushbutton Lights	Description	Notes
AUTO	The amber backlight turns on to indicate the system is in the AUTOMATIC MODE. When the pushbutton is pressed, the regulating rods will respond to commands from the ICS.	AUTO is removed if any of the following exist: AUTO INHIBIT, TRIP CONFIRM, SEQUENCE FAULT.
MANUAL	The white backlight turns on to indicate the system is in the MANUAL mode. When the MANUAL pushbutton is pressed: 1. All groups respond to commands from INSERT/WITHDRAW switch, when enabled. 2. Operation is allowed in SEQUENCE BYPASS, AUXILIARY, and JOG modes.	The system reverts to MANUAL mode when power is applied.
SEQ	The white backlight turns on to indicate the system is in the SEQUENCE Mode. The regulating rods withdraw/insert in sequence in AUTOMATIC or MANUAL mode. Auto transfer occurs from SEQENCE BYPASS mode on selection of AUTOMATIC mode or on a TRIP CONFIRM.	The system reverts to SEQUENCE mode when power is applied.

Switches/Pushbutton Lights	Description	Notes
SEQ BYPASS	The amber backlight turns on to indicate the system is in the SEQUENCE BYPASS mode. Regulating groups may be inserted/withdrawn out of sequence.	The system is in MANUAL mode BYPASS and no TRIP CONFIRM.
GROUP	The white backlight turns on to indicate the system is in the GROUP mode of operation. The power supply to the system is from the group power supply silicone controlled rectifiers (SCRs). Auto transfer occurs from AUXILIARY mode on selection of AUTOMATIC or SEQUENCE mode or on a TRIP CONFIRM.	The system reverts to the GROUP mode when power is applied. Operation is allowed in AUTOMATIC or MANUAL SEQUENCE.
AUX	The amber backlight turns on to indicate the system is in the AUXILIARY mode used for synchronizing and transferring to/from the auxiliary power supply.	The system is in MANUAL mode, SEQUENCE BYPASS mode, and no TRIP CONFIRM.
TRIP RESET	Amber backlight turns on when the pushbutton is depressed. The trip relays in AC trip breakers (reactor trip breakers A and B) and the rod drive power supply return circuit are reset.	Only if groups 1-7 are at their IN LIMIT.

Switches/Pushbutton Lights	Description	Notes
GROUP METER S R	The indicator/pushbutton is divided into three sections: 1. The white GROUP METER indicator turns on to indicate power is on to the following circuits: a. control board meter selection circuit b. position indication panel absolute - relative selection circuit c. relative position indication reset raise - lower circuit 2. The white S (safety) backlight turns on to indicate the safety group's absolute positiion indication (API) averages are being sent to the group meters. 3. The white R (regulating) backlight turns on to indicate the regulating group's API averages are being sent to the group meters.	Indication can be changed to alternate group by depressing pushbutton.
FAULT RESET	The amber fault reset backlight turns on when the pushbutton is depressed.	ASYMMETRY FAULT is cleared.

Switches/Pushbutton Lights	Description	Notes
XFR RESET	The green backlight turns on to indicate there is no group supplied from the auxiliary power supply.	With system in the AUXILIARY mode and a group selected, pressing the XFR RESET button seals the group to the auxiliary power supply and the backlight goes out. A group is unsealed from the auxiliary power supply when in the GROUP mode and no TRANSFER/CONFIRM and no CLAMP CONFIRM by pressing the XFR RESET pushbutton. The backlight goes on.
MANUAL XFR/XFR CONF	The white MANUAL XFR backlight turns on only while the pushbutton is pressed. This rotates the selected transfer switches, causing the selected group rods to transfer to/from the auxiliary power supply. The red XFR CONF backlight turns on when at least one transfer switch rotates to the position where a rod is transferred to the auxiliary power supply.	

Switches/Pushbutton Lights	Description	Notes
CLAMP REL	The white CLAMP REL backlight turns on to indicate the clamp - clamp release relay is in the CLAMP RELEASE state. The green CLAMP REL backlight turns on to indicate all the clamping contactors are deenergized.	The system reverts to CLAMP REL when power is applied.
CLAMP	The white CLAMP backlight turns on to indicate the clamp - clamp release relay is in the CLAMP state. The red CLAMP backlight turns on to indicate at least one set of clamping contactors is energized.	The clamp - clamp release relay changes state only when the selected group power supply is synchronized to the auxiliary power supply.
RUN SPEED	The white backlight turns on to indicate the system is in the RUN mode and the control rods will withdraw/insert at 30 in. per minute.	The system reverts to RUN mode when power is applied.
JOG SPEED	The amber backlight turns on to indicate the system is in the JOG mode and the control rods will withdraw/insert at 3 in. per minute.	The system must be in MANUAL and SEQUENCE BYPASS modes and no TRIP CONFIRM exists.
IN LIMIT BYPASS	The amber backlight turns on while the IN LIMIT BYPASS pushbutton is depressed. When pressed, the pushbutton enables a group to insert below the IN LIMIT BYPASS to engage and latch the roller nuts to the leadscrew.	

Switches/Pushbutton Lights	Description	Notes
AUX SEQ PREP	The amber backlight turns on to indicate there is an auxiliary sequence command enable. When a regulating group is transferred to the auxiliary power supply, the operator selects ALL on the SINGLE SELECT SWITCH, verifies all rods are transferred, then presses the AUX SEQ PREP pushbutton to enable the regulating groups.	The system is in MANUAL and SEQUENCE mode of AUTOMATIC.
TRIP CONFIRM	The indicator turns on to indicate that TRIP A or TRIP C and TRIP B or TRIP D have actuated to disengage the rods in groups 1-7 to cause a REACTOR TRIP.	This indicates that the minimum number of trip devices have actuated.
ASYMMETRY BYPASS	The indicator turns on to indicate there is at least one asymmetry bypass switch in the BYPASS position.	Bypass switches are located on the posistion indicating amps in the system logic cabinets.
ASYMMETRY FAULT	The indicator turns on to indicate that one or more rods in a group are out of alignment with the group average.	When a fault exists the IN LIMIT is bypassed to allow a runback if needed. It also allows recovering of a dropped rod by allowing movement of a group from its OUT LIMIT.

Switches/Pushbutton Lights	Description	Notes
COMMAND IN OUT	The indicators turn on to indicate there is both an A command and a B command being sent to one of the programmer motors in the power supply.	Since either IN/OUT command A or IN/OUT command B turns the programmer motor in the desired direction, the indicator may be out during a command signal, indicating one of the command channels is not complete.
OUT INHIBIT	The indicator turns on to indicate there is an OUT INHIBIT from the reactor protection system or the system logic to inhibit the OUT command of the regulating rods.	
SEQUENCE FAULT	The indicator turns on to indicate the regulating groups are not withdrawing/inserting in sequence.	AUTO mode and SEQUENCE ENABLE is inhibited.
AUTO INHIBIT	The indicator turns on to indicate the AUTOMATIC mode cannot be selected because of one of the following: 1. no AUTO permit from integrated control system (ICS) 2. safety group(s) not at the OUT LIMIT 3. AUTO INHIBIT from ICS	Regulating rods IN/OUT motion stopped and system reverts to the MANUAL mode.

Switches/Pushbutton Lights	Description	Notes
PROGRAMMER LAMP FAULT	The indicator turns off to indicate at least one programmer lamp is out on a power supply. A non-Class 1E trip causes the indicator to turn off.	The 3-2 HOLD-JOG-IN command for the group with the lamp failure is inhibited. Safety groups 1-4 IN/OUT commands are inhibited.
POWER MONITOR	The indicator turns off to indicate there is at least a one-phase failure in the power supply transformer (A/B).	Safety groups 1-4 IN/OUT commands are inhibited.
BLOWER MONITOR	The indicator turns off to indicate a blower failure, or dirty filter in the motor return cabinet.	
MOTOR RETURN TEMP MONITOR	The indicator turns off to indicate an overtemperature condition in a motor return SCR.	Each motor return SCR's temperature is monitored with a thermocouple.
SYSTEM LOGIC POWER	The indicator turns off to indicate a power supply failure detected by the power supply monitor module.	Power supplies monitored include: 1. +24 vdc system logic power supply 2. +15 vdc system logic power supply 3. +15 vdc analog power supply 4. +5 vdc analog power supply
OUT LIMIT	Group 1-8 indicators turn on to indicate when a rod in the respective group is at the OUT LIMIT.	OUT command for the respective group is inhibited. AUTOMATIC mode is allowed when all safety groups are at OUT LIMIT. If a safety group indicator turns off in the AUTOMATIC mode, a runback fault causes the regulating rods to insert.

Switches/Pushbutton Lights	Description	Notes
ON CONT	<u>Safety groups 1-4</u> The indicator turns on to indicate that the safety group is enabled to operate on its power supply or the auxiliary power supply. It also turns on to indicate the group is enabled to synchronize to/from the auxiliary power supply. <u>Axial power shaping rod group 8</u> Indication is the same as that for the safety groups. <u>Regulating groups 5, 6, and 7</u> The indicator turns on in sequence to indicate the auto sequencer is enabling rods to operate either on their own group power supply or the auxiliary power supply. It also turns on to indicate the group is enabled to synchronize to/from the auxiliary power supply.	The regulating rods ON CONT indicators light in the the following order: Group 5 is on when group 6 is equal to or less than 25% withdrawn. Group 6 is on when group 5 is equal to or more than 75% withdrawn and group 7 is equal to or less than 25% withdrawn. Group 7 is on when group 6 is equal to or more than 75% withdrawn and group 5 is at the OUT LIMIT.

Switches/Pushbutton Lights	Description	Notes
IN LIMIT	The indicator turns on for a group when a rod in that group is at its IN LIMIT.	With groups 1-7 at their IN LIMIT, the IN command for that group is inhibited, but may be bypassed using the IN LIMIT BYPASS pushbutton. TRIP RESET is permitted.
SUPPLY PHASES	Both the SELECTED SUPPLY and AUXILIARY SUPPLY indicators turn on to indicate both power supplies are enabled for synchronization to/from the auxiliary power supply. Each light represents a motor phase.	
SYNC CONFIRM	The indicator turns on to indicate the SELECTED SUPPLY and the AUXILIARY SUPPLY outputs match and are synchronized and the system is ready to CLAMP the power supplies together.	The system must be in the AUXILIARY and JOG modes.

This page intentionally blank.

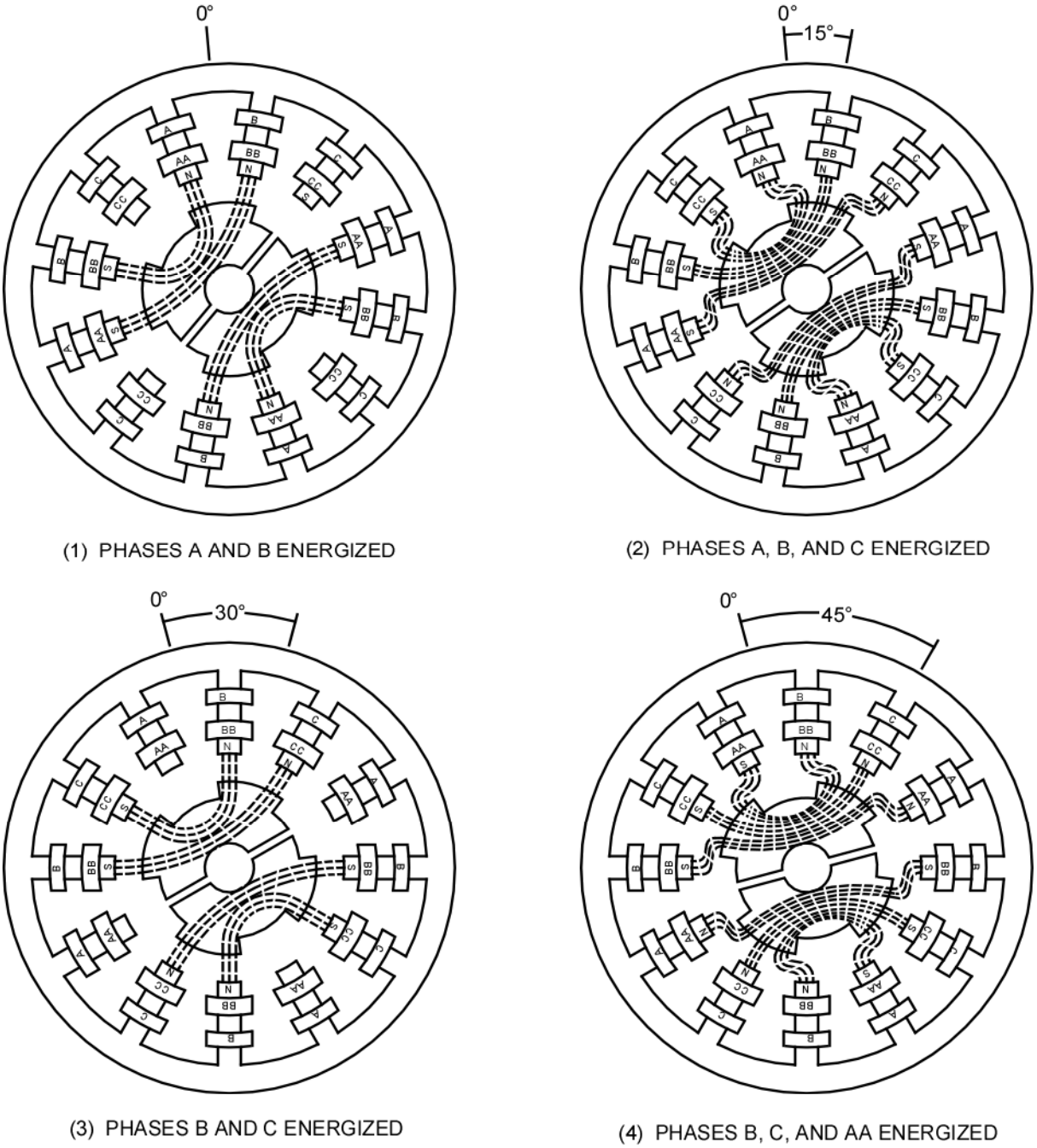

Figure 6.2-1 Rotating Sequence

This page intentionally blank

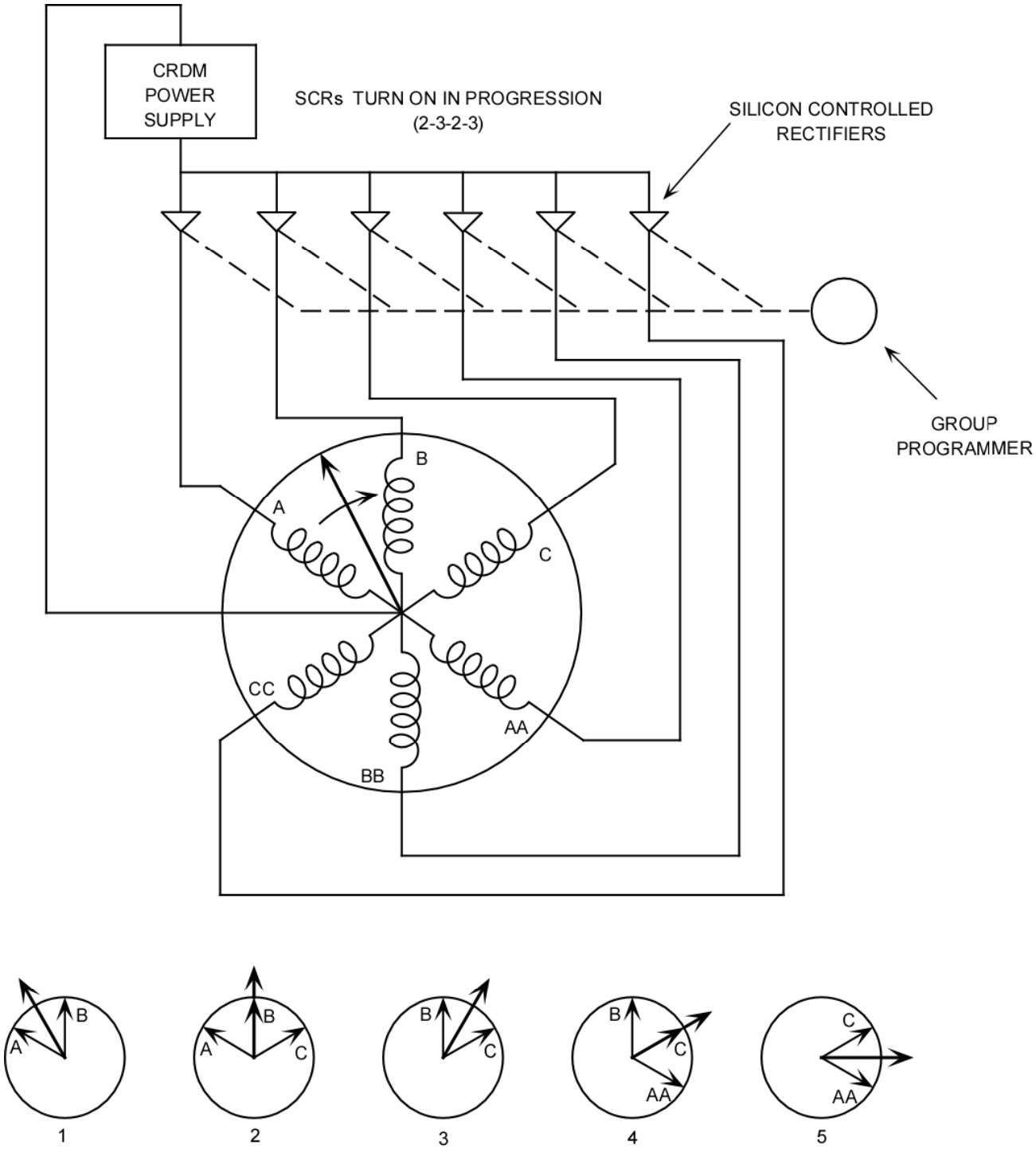

Figure 6.2-2 Rotating Magnetic Field

This page intentionally blank

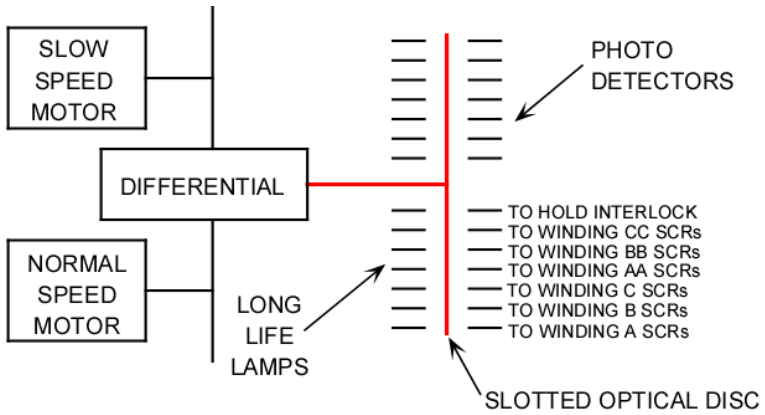

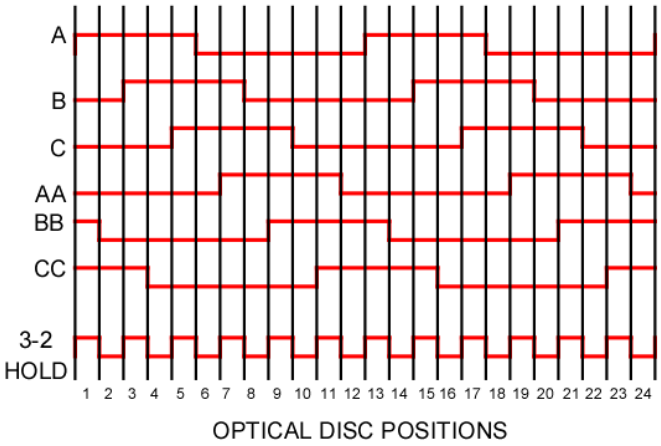

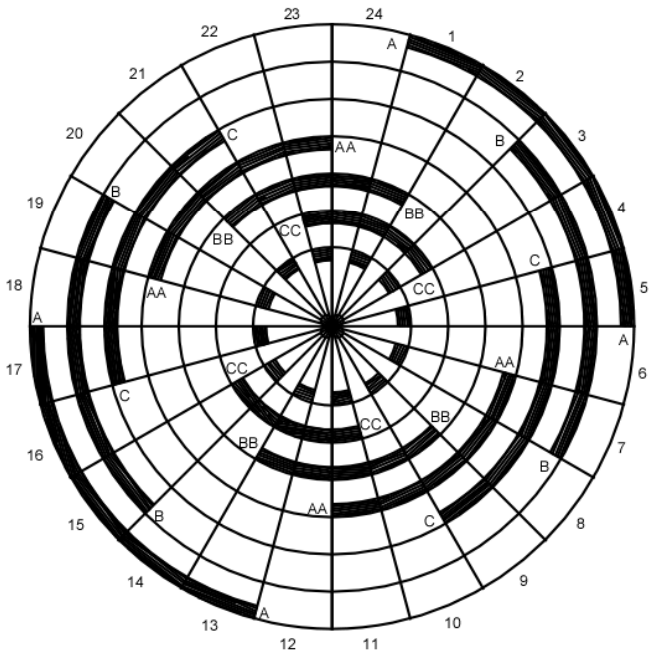

Figure 6.2-3 Motor Control Diagram

This page intentionally blank

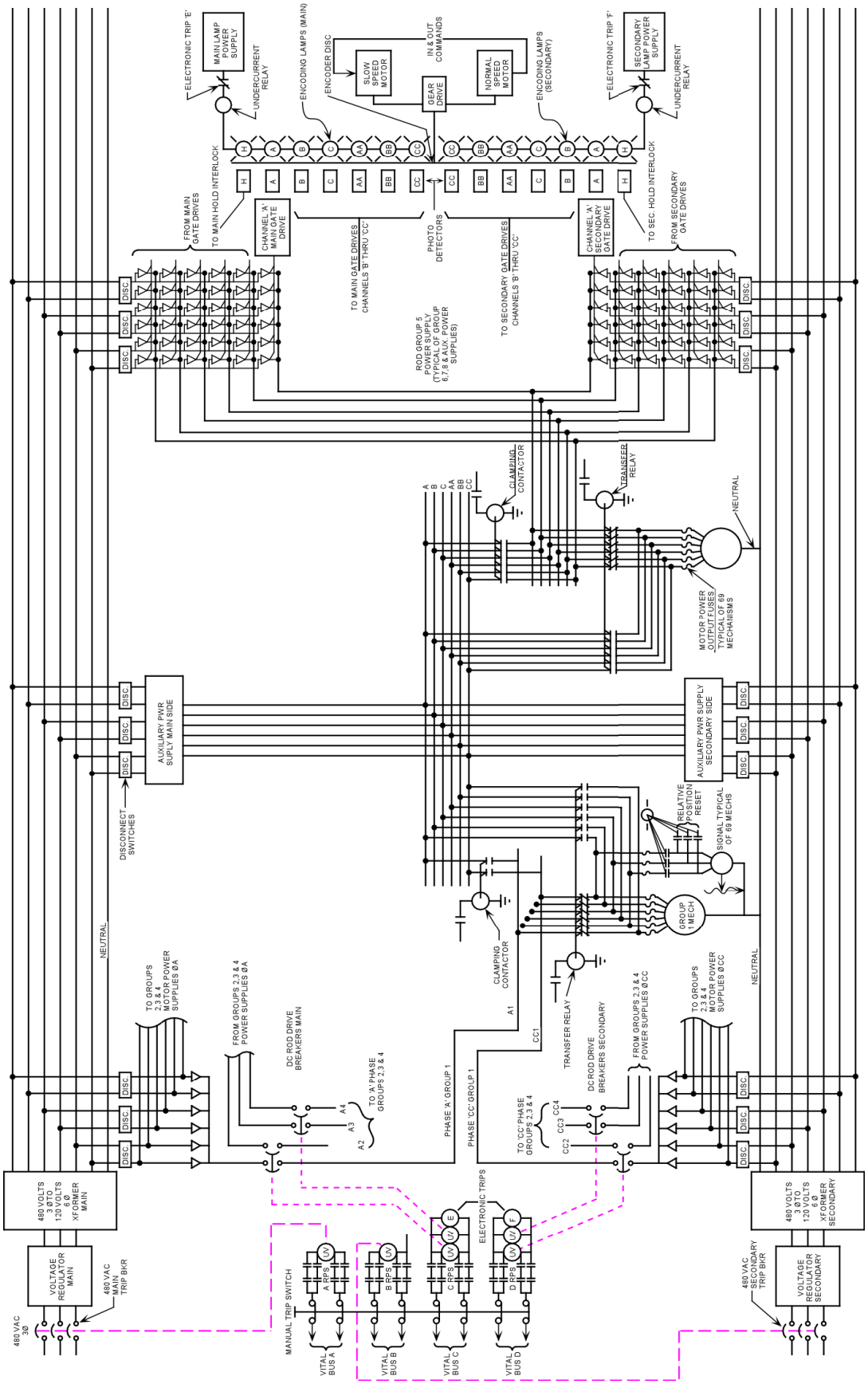

Figure 6.2-4 Control Rod Drive Control System (Optical Disc Programmer)

This page intentionally blank

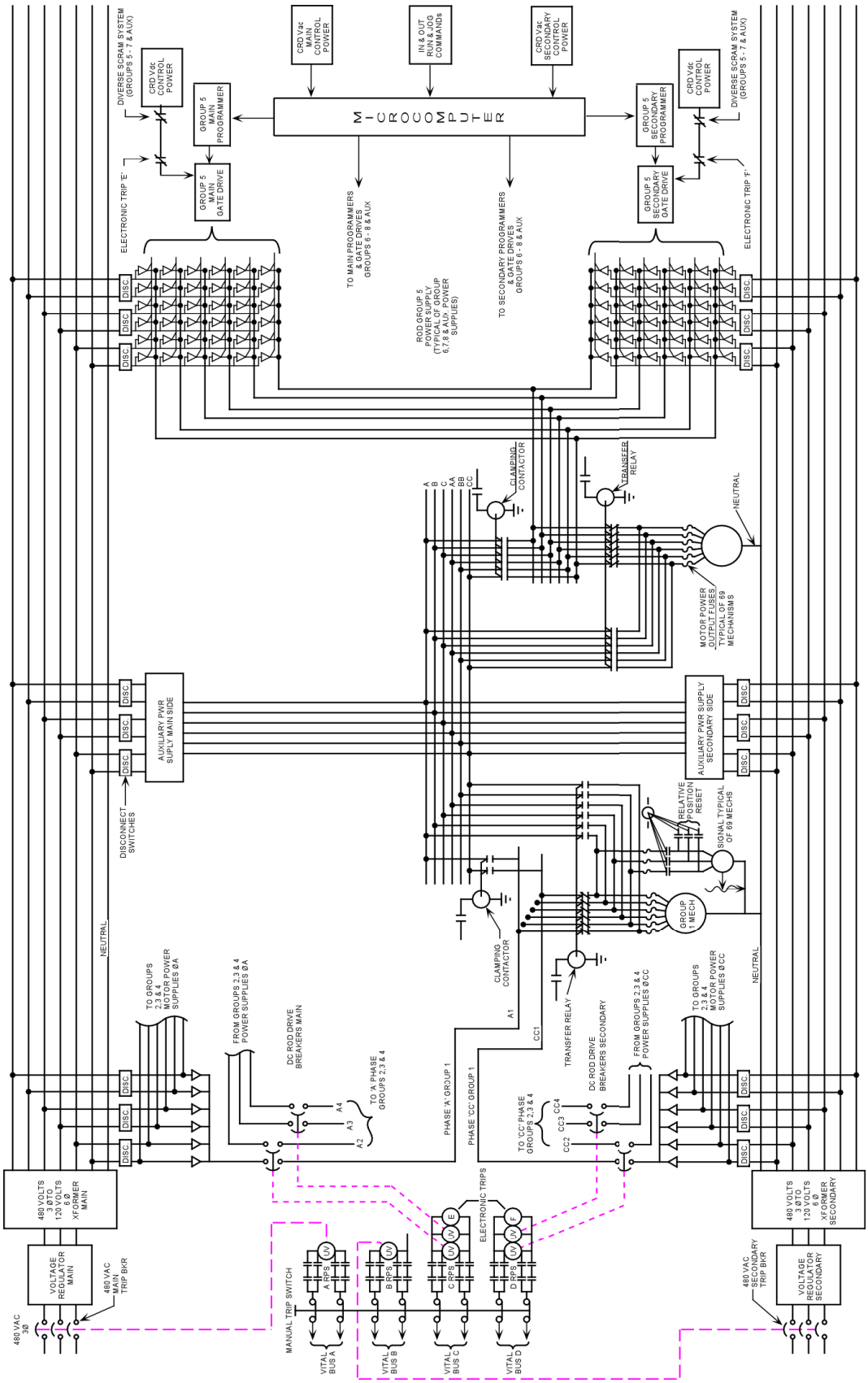

Figure 6.2-4a Control Rod Drive Control System (Microcomputer Programmer)

This page intentionally blank

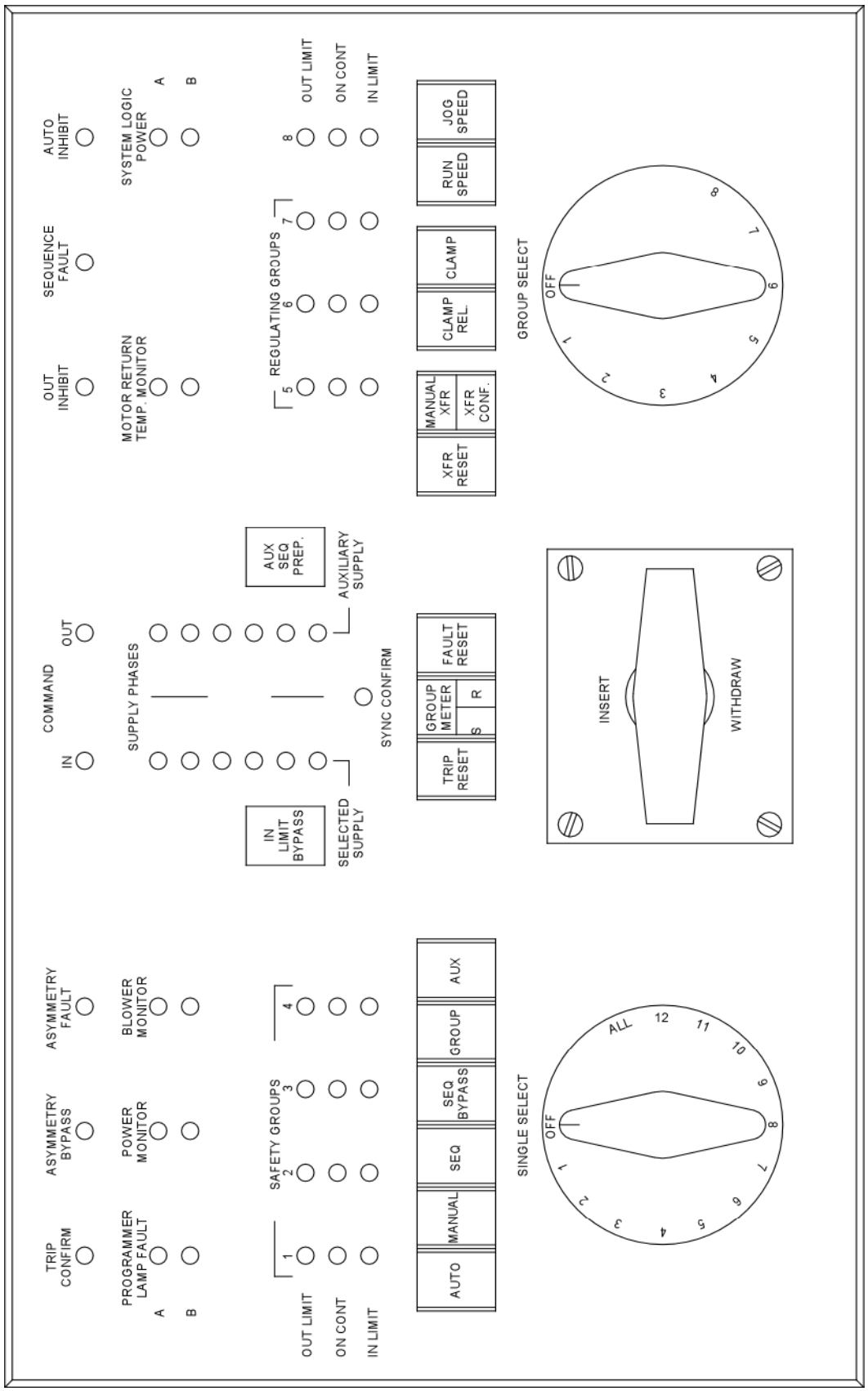

Figure 6.2-5 Diamond Control Station

This page intentionally blank

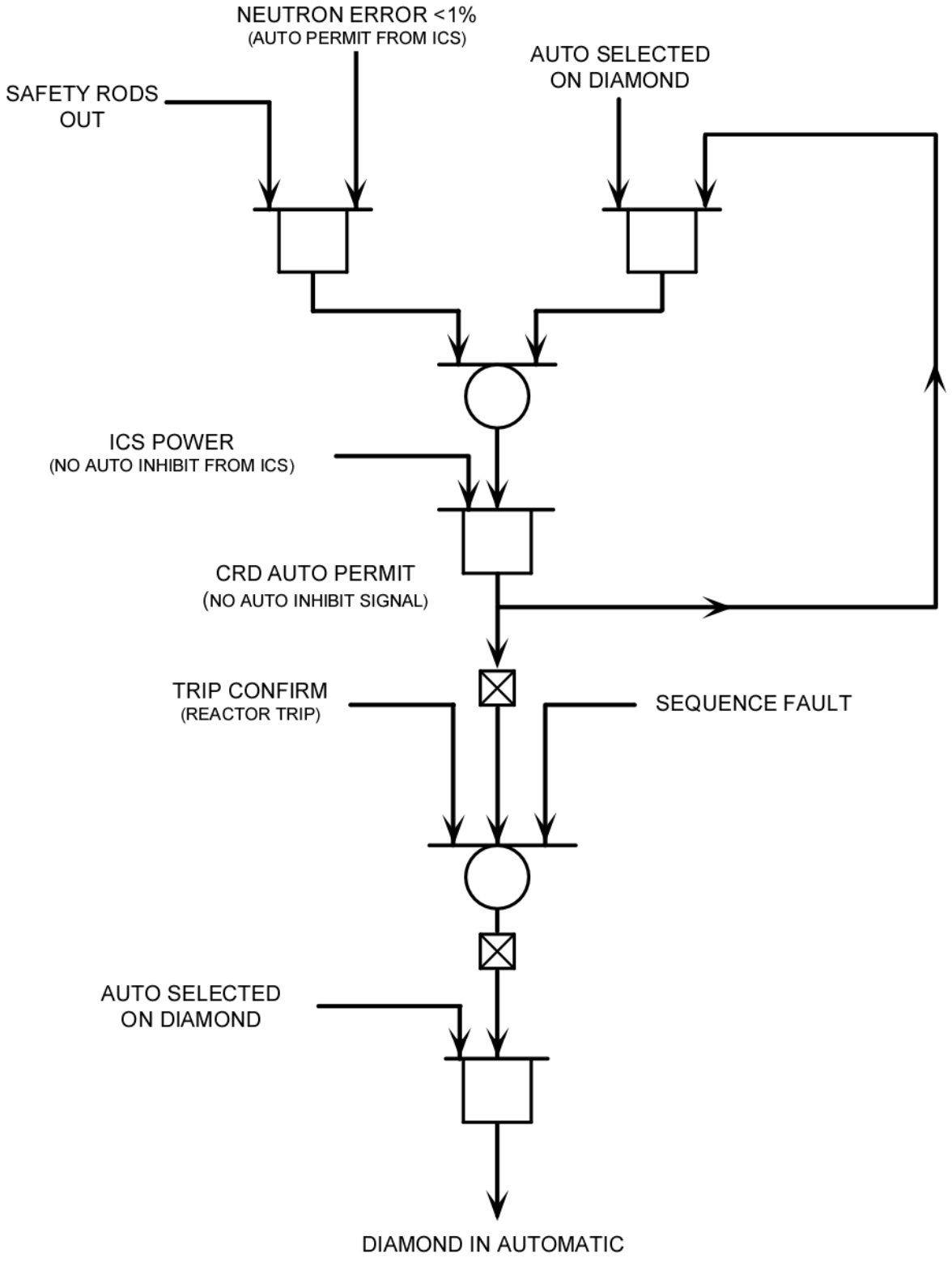

Figure 6.2-6 Control Rod Drive Auto Logic

This page intentionally blank