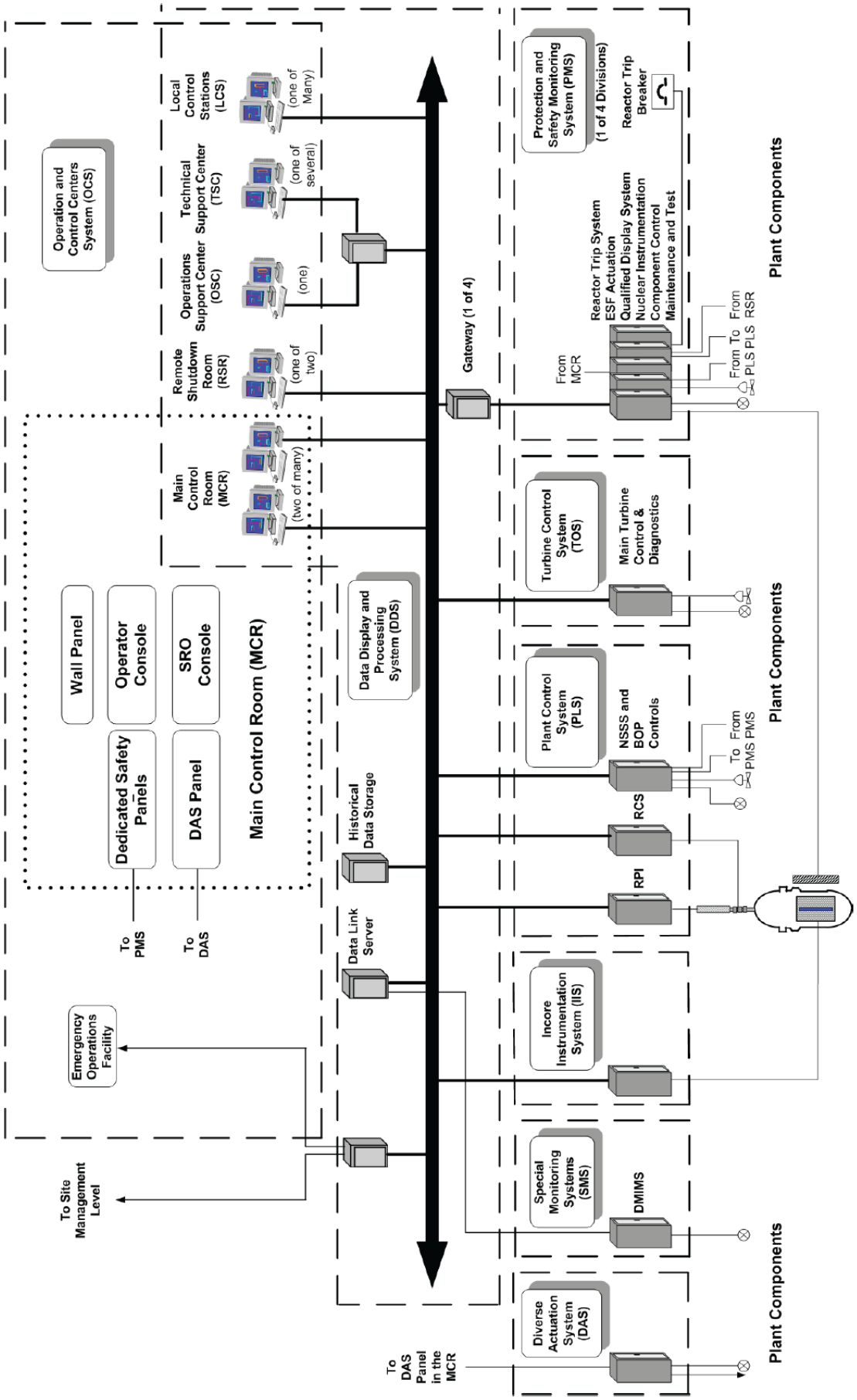

Figure 8-1
Instrumentation and Control Architecture

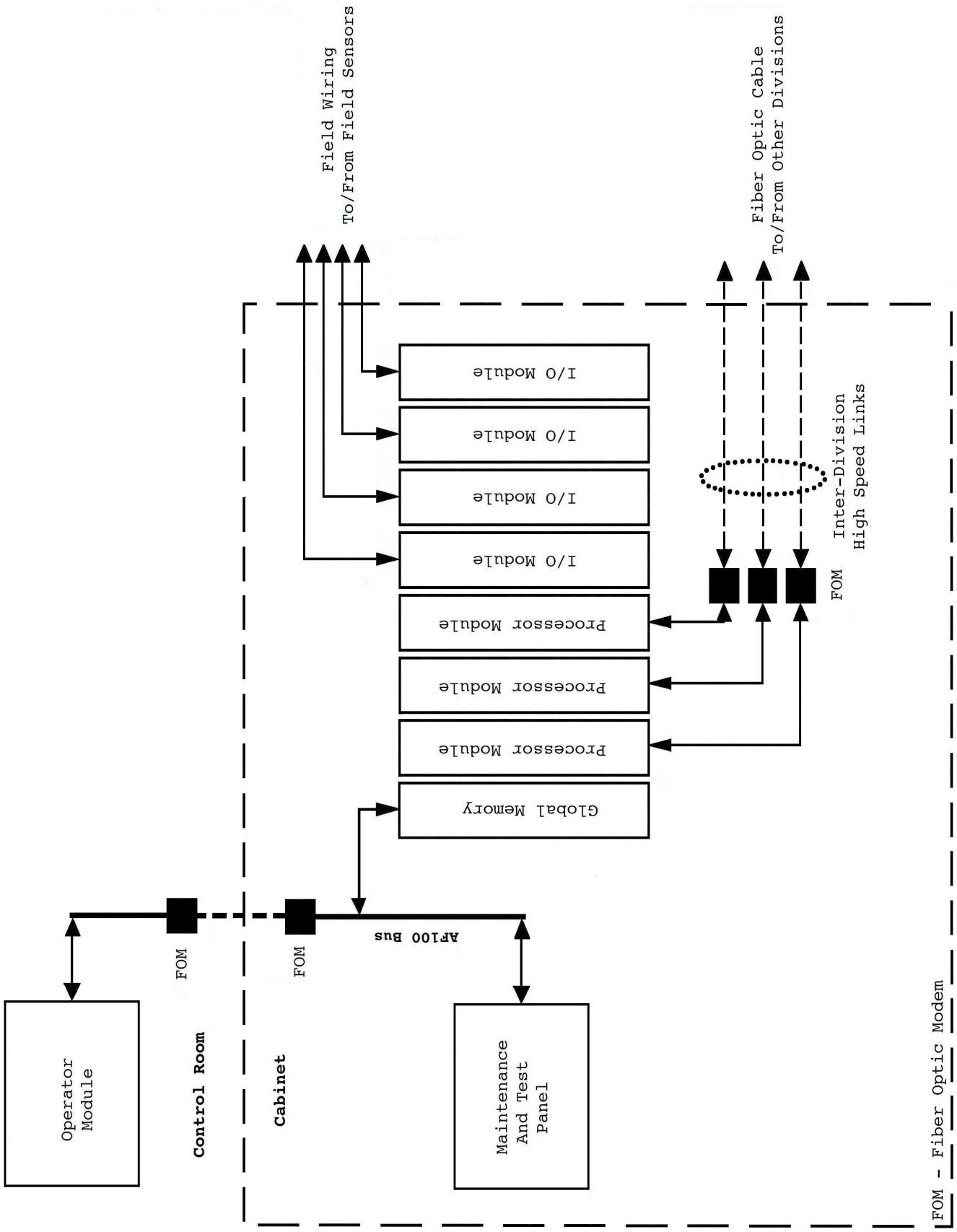

Figure 8-2
Advant Controller (Common Q)

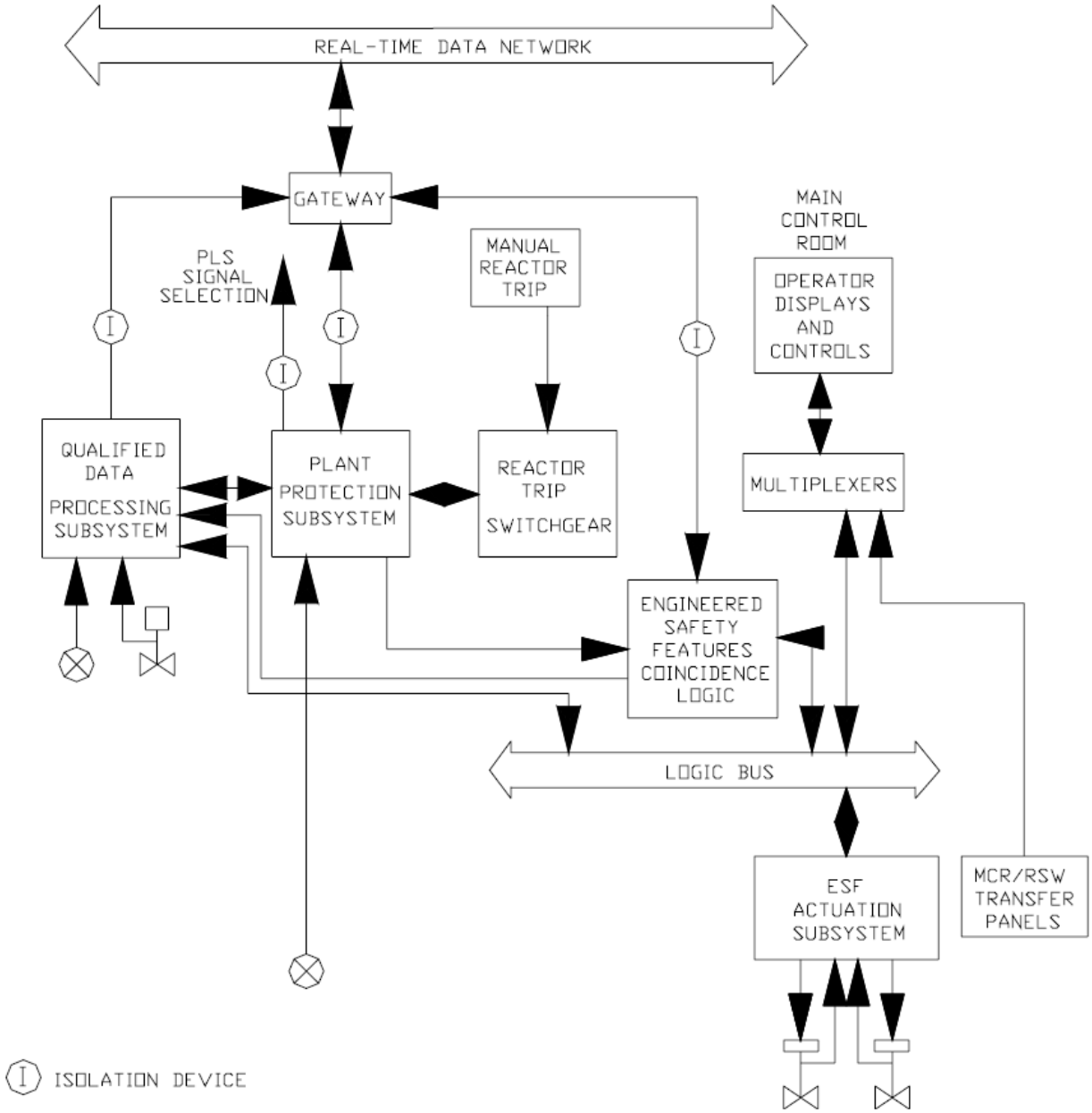

Figure 8-3
Protection and Safety Monitoring System

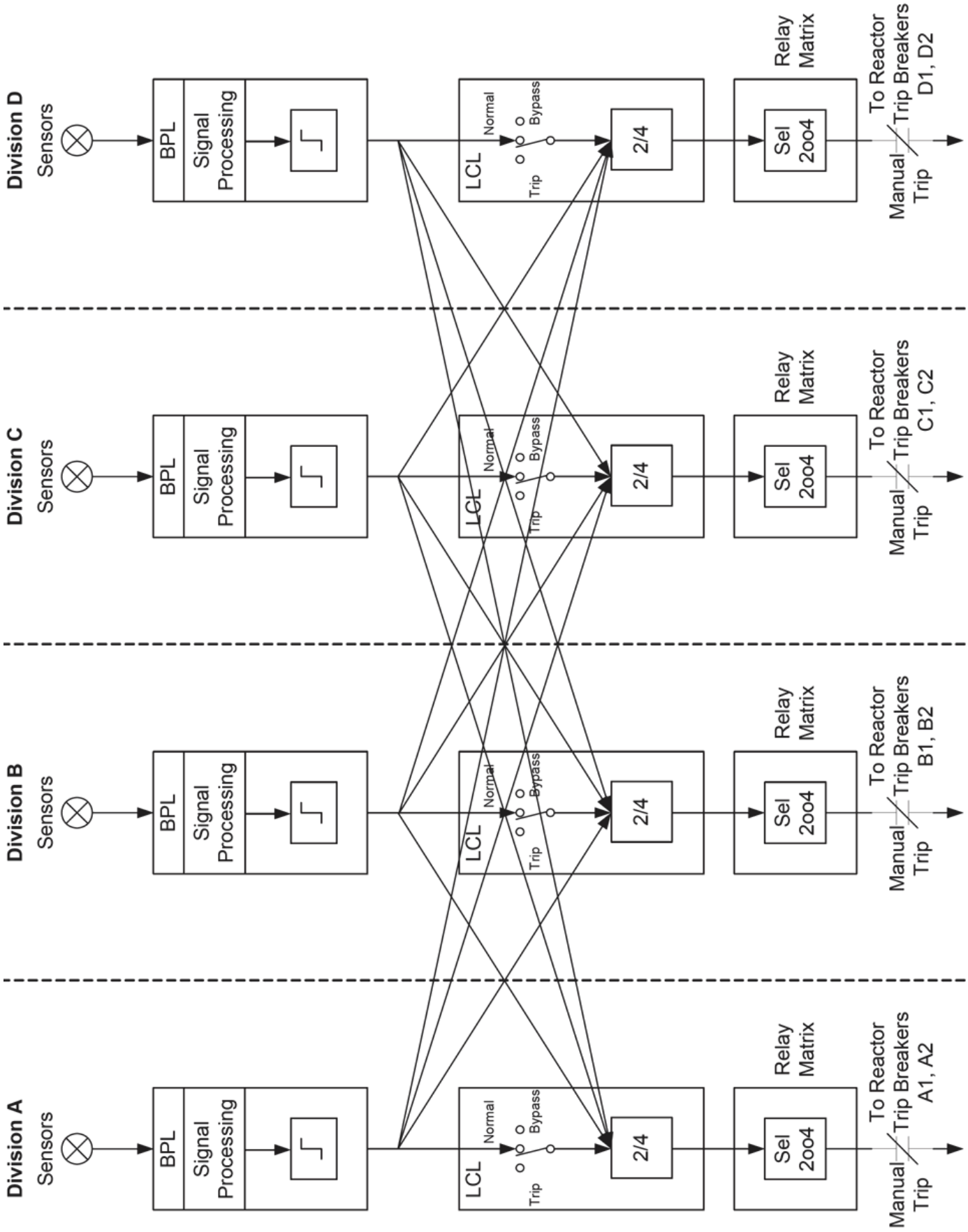

Figure 8-4
Reactor Trip Logic

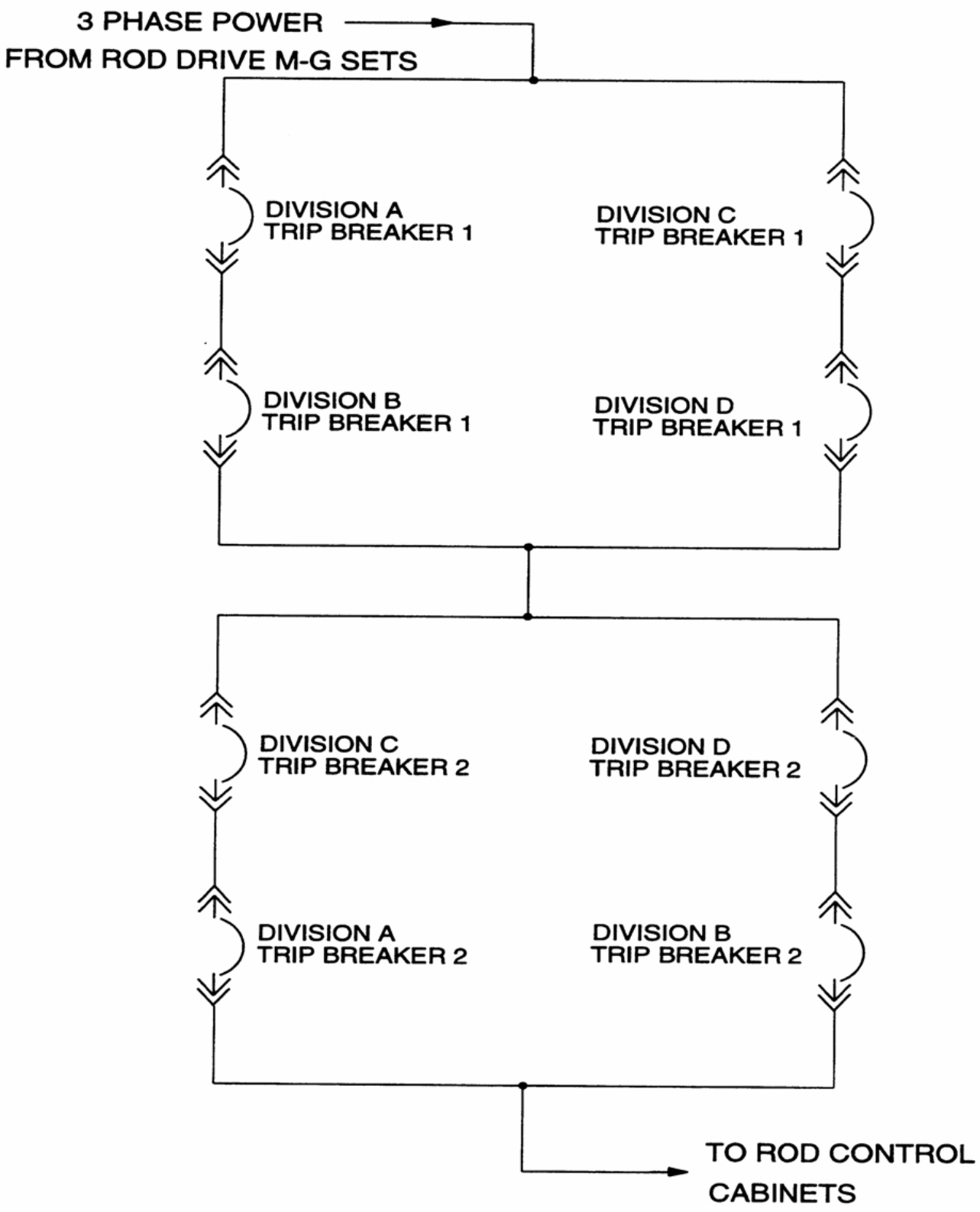

Figure 8-5
Reactor Trip Switchgear Configuration

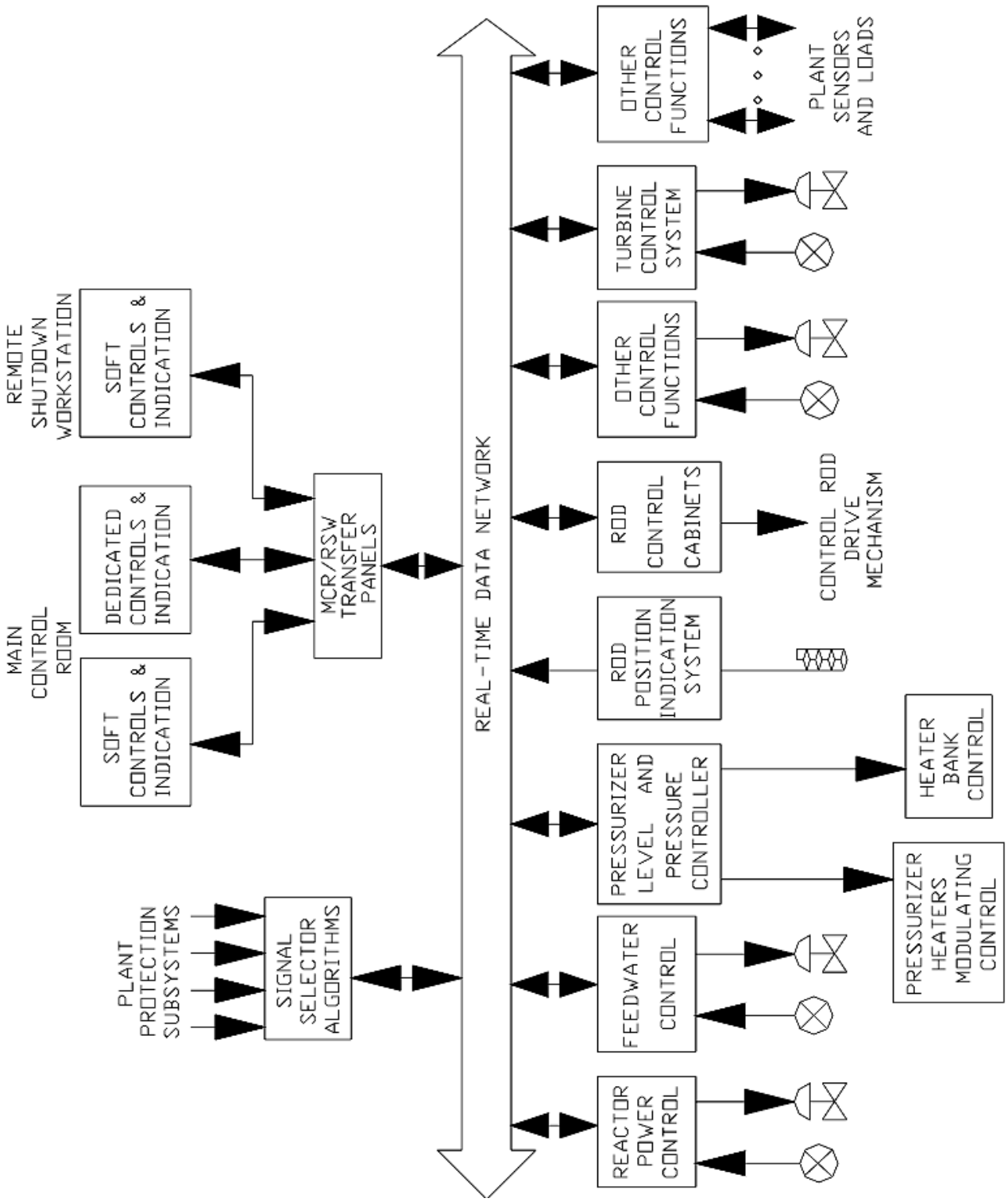

Figure 8-6
Plant Control System

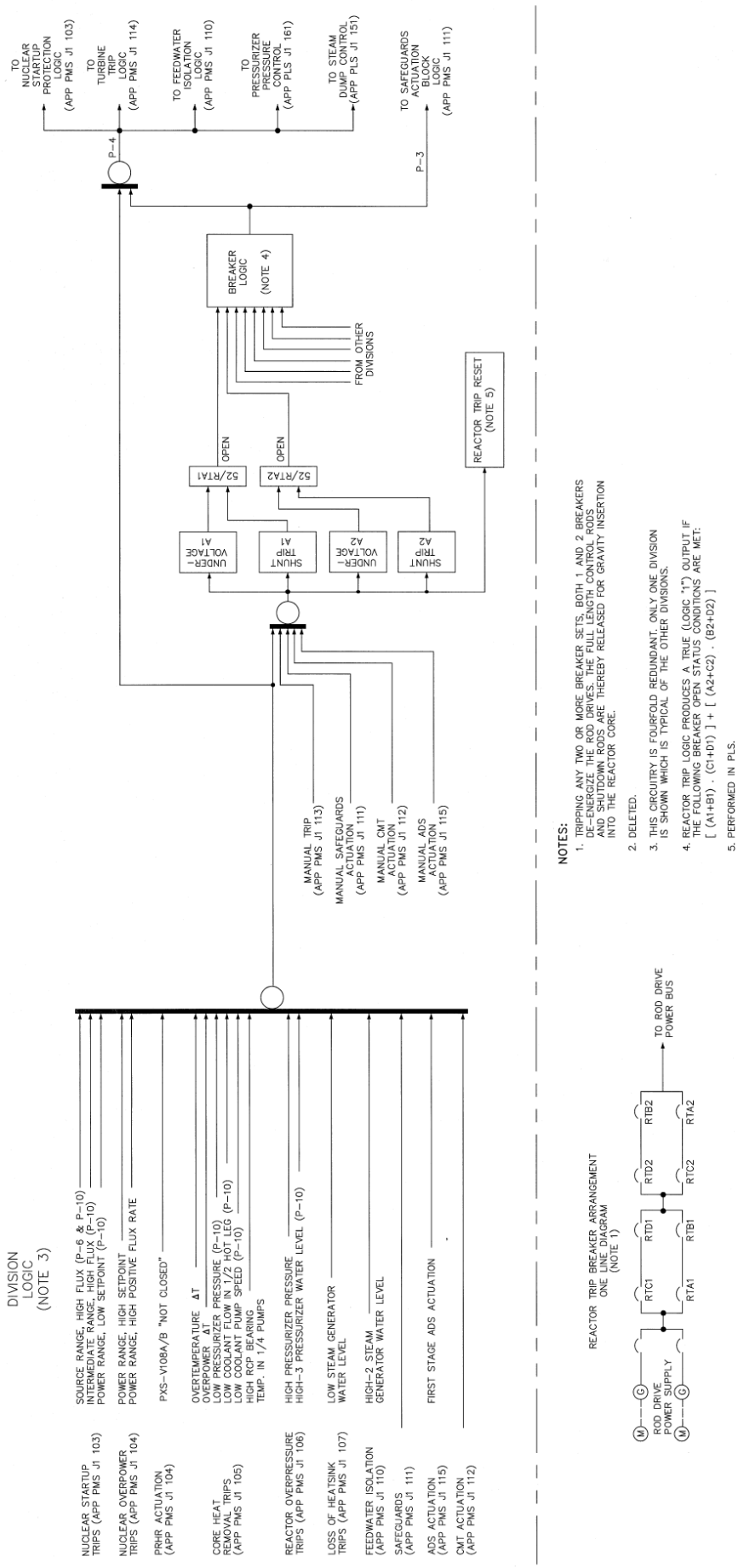

Figure 8-7
Functional Diagram - Reactor Trip Functions

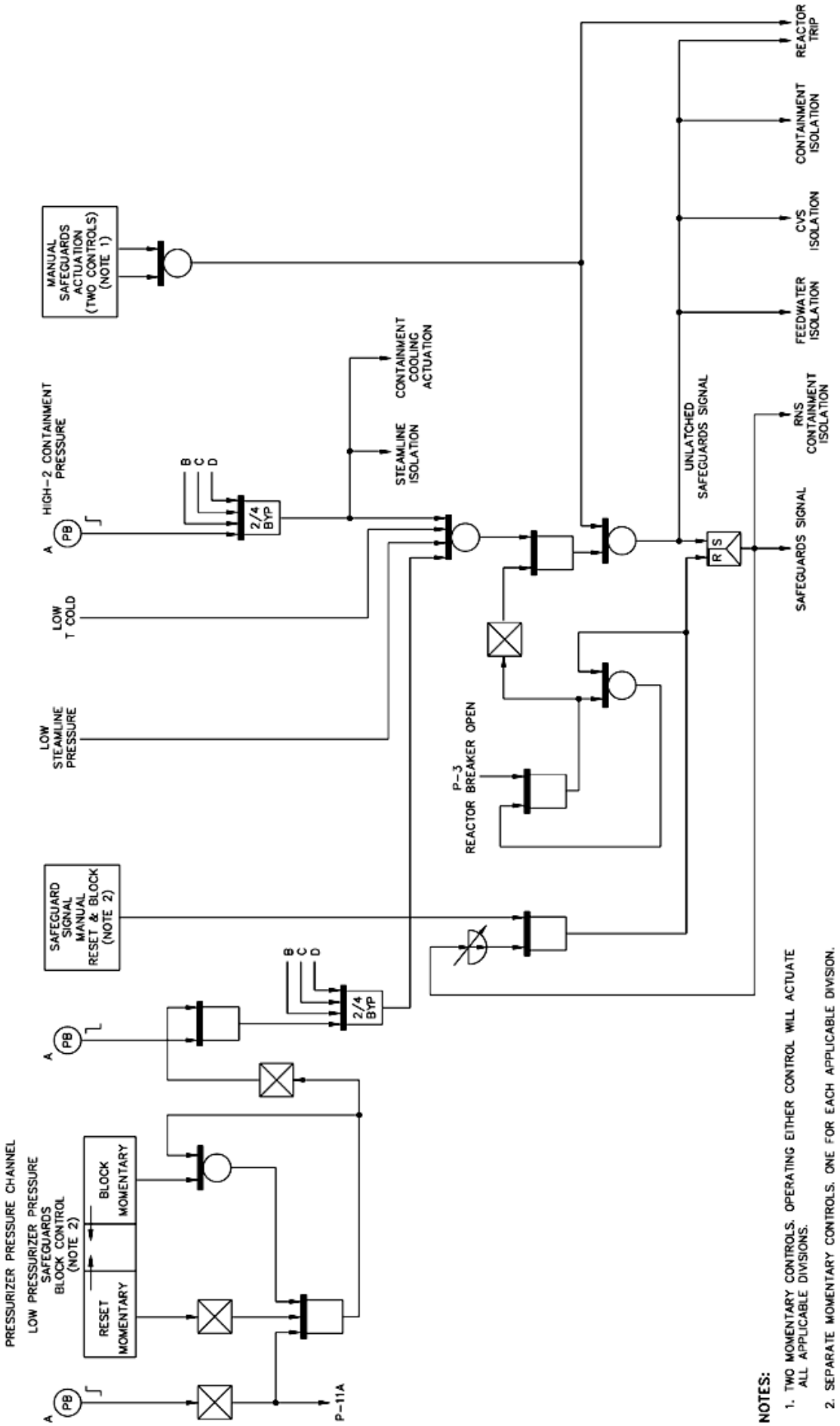

Figure 8-8
Functional Diagram – Safeguards Actuation

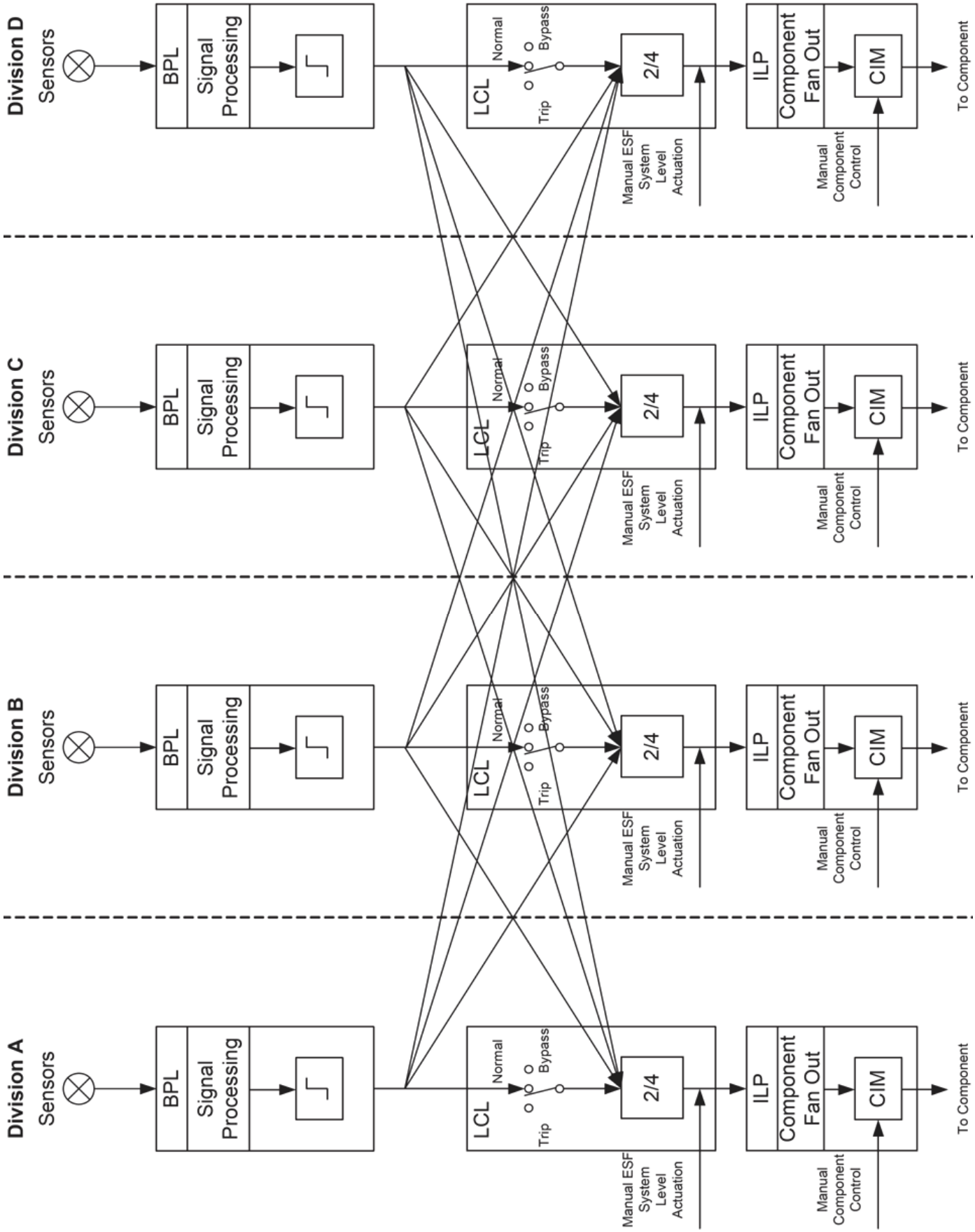

Figure 8-9
ESF Logic