U.S.NRC

United States Nuclear Regulatory Commission

Protecting People and the Environment

Secondary Plant Systems

AP1000 TECHNOLOGY SECTIONS:

7.1 MAIN STEAM SUPPLY SYSTEM

7.2 CONDENSATE & FEEDWATER

7.3 STARTUP FEEDWATER SYSTEM

7.4 BOP SYSTEMS

HRTD Human Resources Training & Development

7.1 Main Steam Supply System Objectives

1. **State the purposes of the main steam supply system.**

2. **Describe the major differences between the main steam supply systems of the AP1000 & currently operating Westinghouse plants.**

Main Steam Supply System Purposes

1. **Transfer steam from the steam generators to the turbine-generator & other secondary system components,**

2. **Provide overpressure protection for the steam generators, and**

3. **Provide a path for decay heat removal.**

Fig. 7.1-1

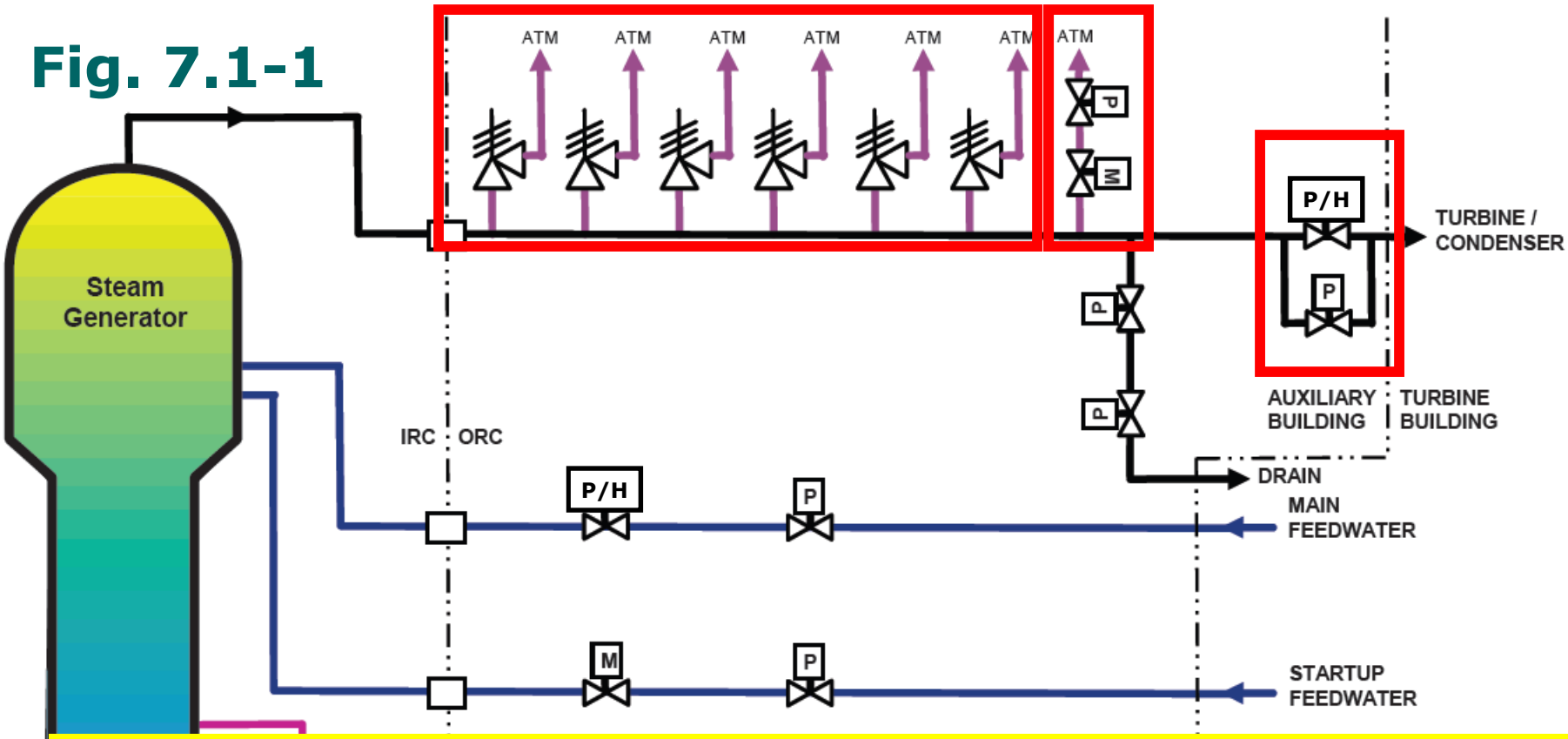

Safety related up to main steam isolation & bypass valve in each steam line.

Major components:

- **Main steam safety valves**
- **Power-operated atmospheric dump valve with iso. valve**
- **MSIV with bypass valve**

Main Steam Isolation Signals

- **Low steam line pressure (either line),**
- **High containment pressure**
- **High negative steam pressure rate (either line)**
- **Low T_{cold} (either RCS loop), and**
- **Manual**

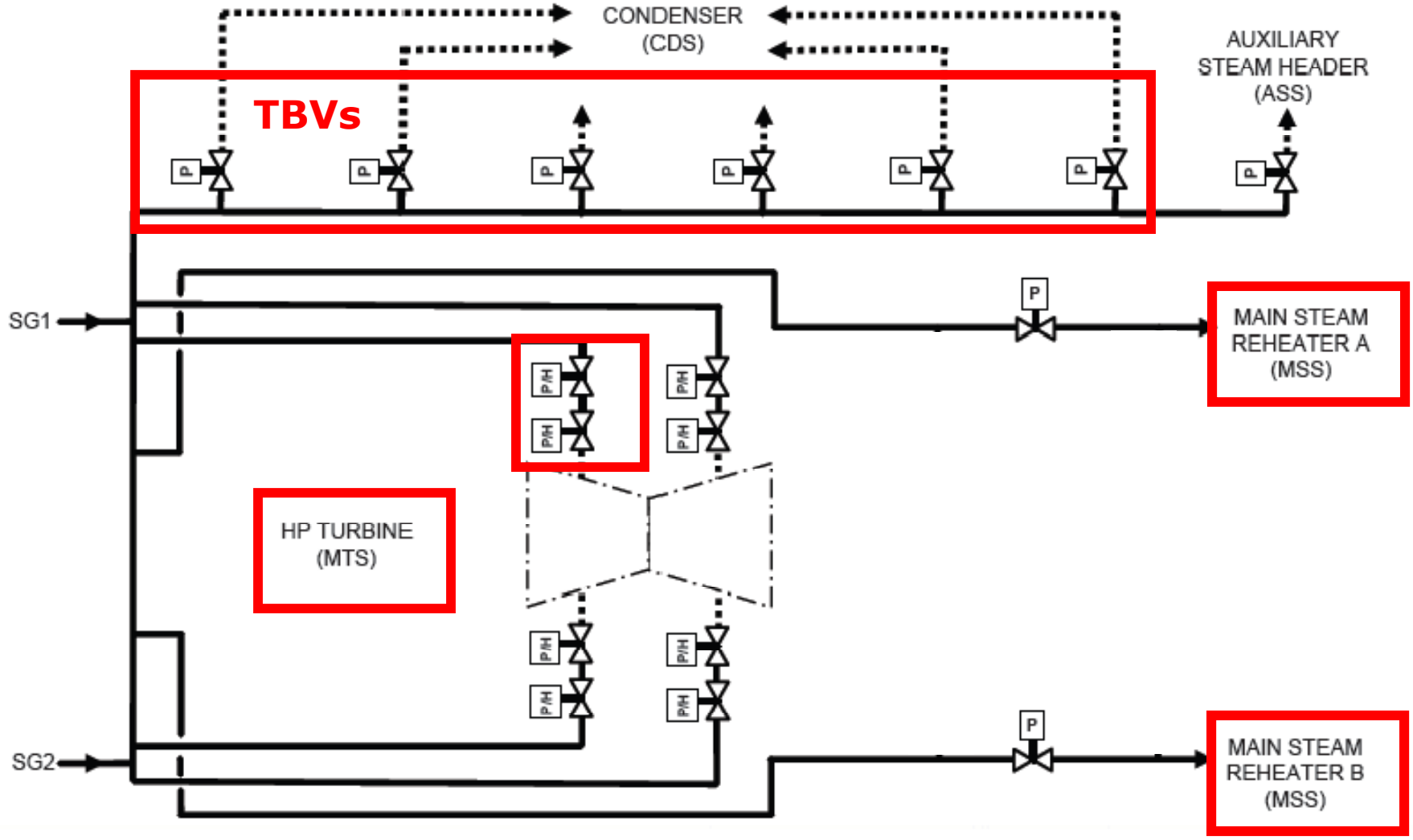

Fig. 7.1-2
Extension of Main Steam Piping

Fig. 7.1-3

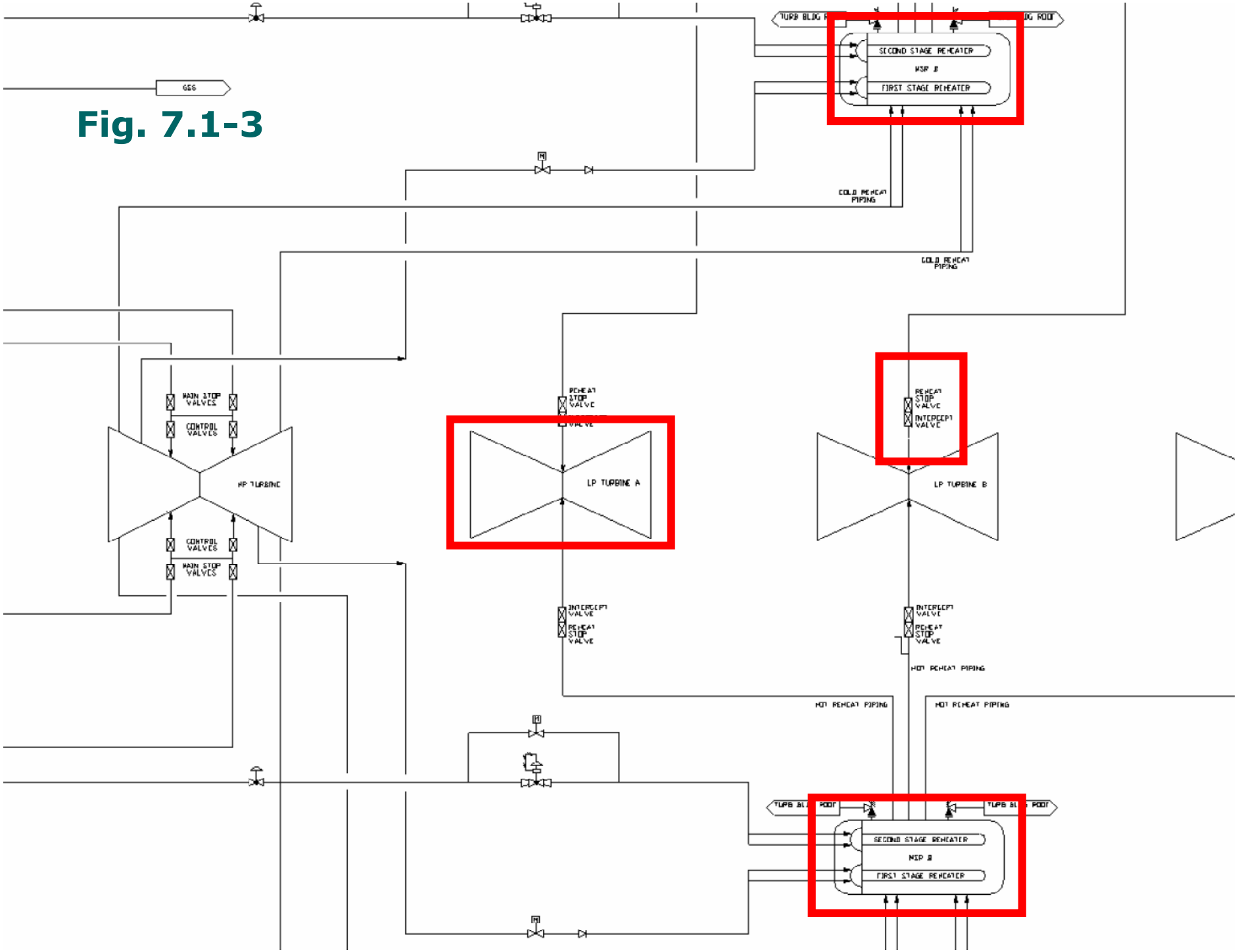
GSS
SECOND STAGE REHEATER
MSR B
FIRST STAGE REHEATER
COLD REHEAT PIPING
COLD REHEAT PIPING
MAIN STOP VALVES
CONTROL VALVES
HP TURBINE
CONTROL VALVES
MAIN STOP VALVES
REHEAT STOP VALVE
LP TURBINE A
REHEAT STOP VALVE
INTERCEPT VALVE
LP TURBINE B
INTERCEPT VALVE
REHEAT STOP VALVE
INTERCEPT VALVE
REHEAT STOP VALVE
HOT REHEAT PIPING
HOT REHEAT PIPING
HOT REHEAT PIPING
SECOND STAGE REHEATER
MSR B
FIRST STAGE REHEATER

7.1 Main Steam Supply System Objective 2

Major differences?

Nothing major.

7.2 Condensate & Feedwater System Objectives

1. **State the purposes of the condensate & feedwater system.**

2. **Describe the major differences between the condensate & feedwater systems of the AP1000 & currently operating Westinghouse plants.**

Condensate & Feedwater System Purposes

1. **To transfer water from the main condenser to the steam generators & to preheat it,**

2. **To collect & distribute heater drains, and**

3. **To purify secondary water & to maintain secondary chemistry control.**

Fig. 7.2-1

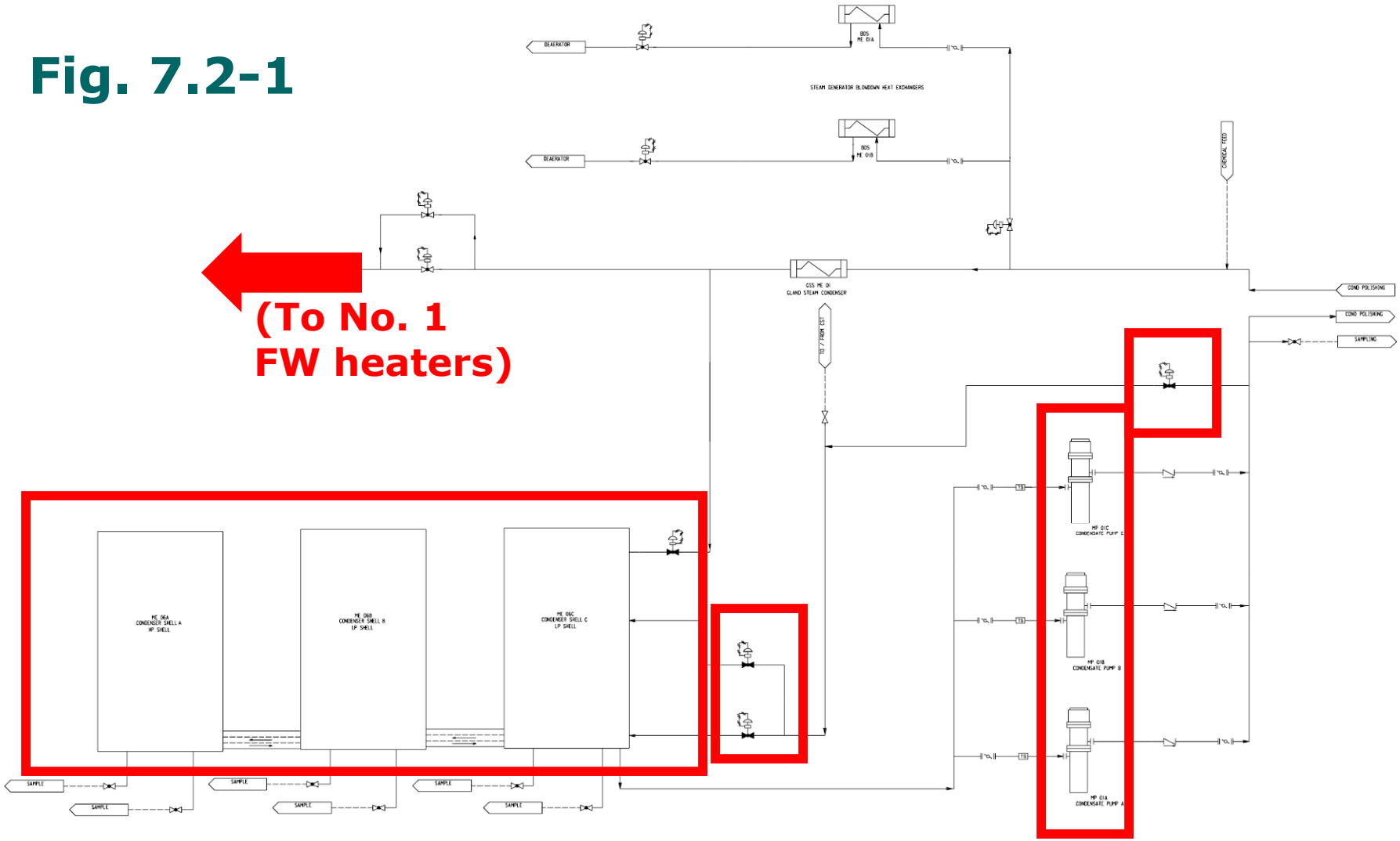
(To No. 1
FW heaters)
DEAERATOR
DEAERATOR
STEAM GENERATOR BLOWDOWN HEAT EXCHANGERS
CHEMICAL FEED
GLAND STEAM CONDENSER
COND POLISHING
COND POLISHING
SAMPLING
CONDENSATE PUMP C
CONDENSATE PUMP B
CONDENSATE PUMP A
CONDENSER SHELL A
HP SHELL
CONDENSER SHELL B
LP SHELL
CONDENSER SHELL C
LP SHELL
SAMPLE

Fig. 7.2-2

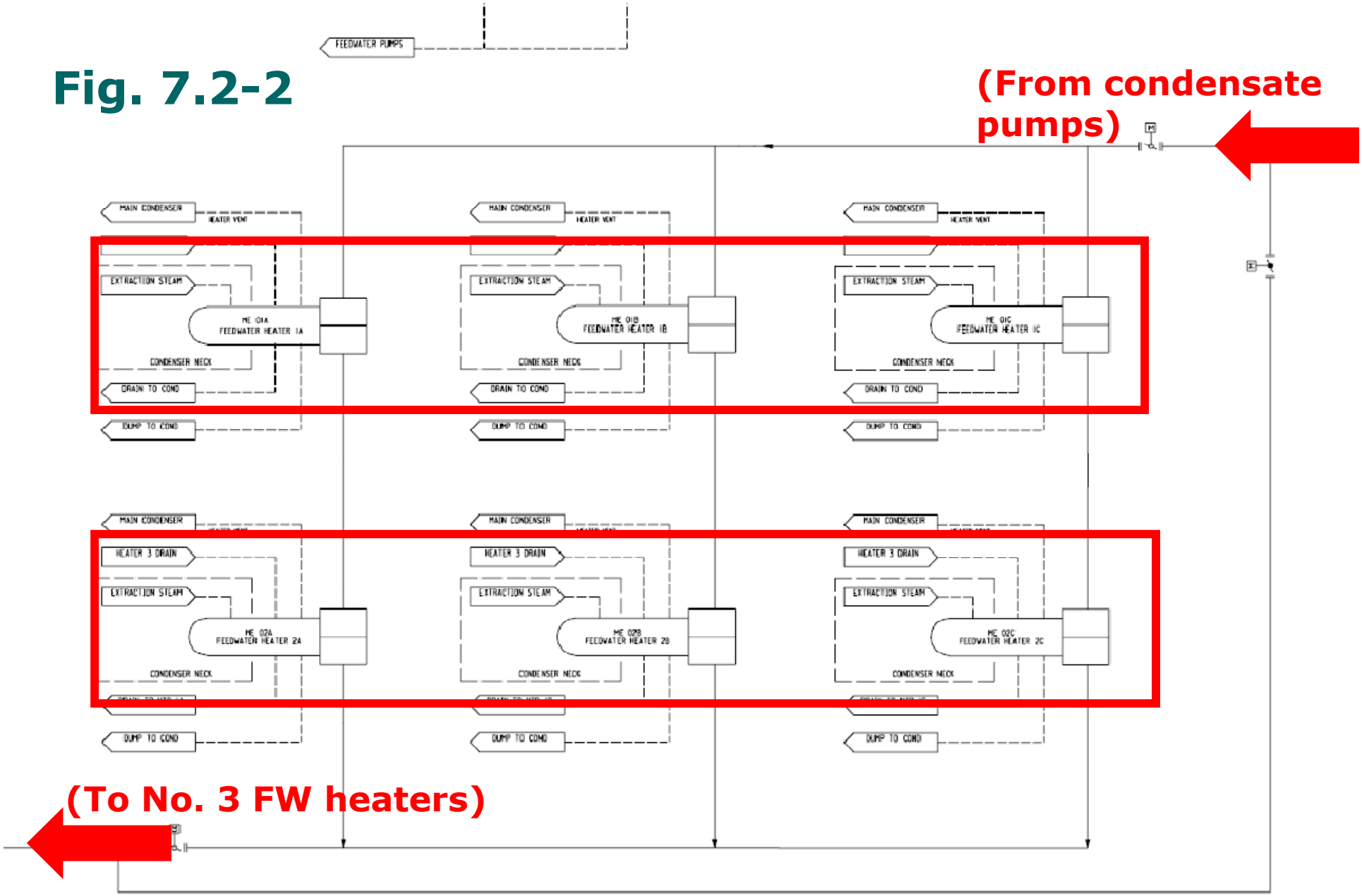
(From condensate pumps)
FEEDWATER PUMPS
MAIN CONDENSER
HEATER VENT
EXTRACTION STEAM
ME 01A
FEEDWATER HEATER 1A
ME 01B
FEEDWATER HEATER 1B
ME 01C
FEEDWATER HEATER 1C
CONDENSER NECK
DRAIN TO COND
DUMP TO COND
HEATER 3 DRAIN
ME 02A
FEEDWATER HEATER 2A
ME 02B
FEEDWATER HEATER 2B
ME 02C
FEEDWATER HEATER 2C
(To No. 3 FW heaters)

Fig. 7.2-2

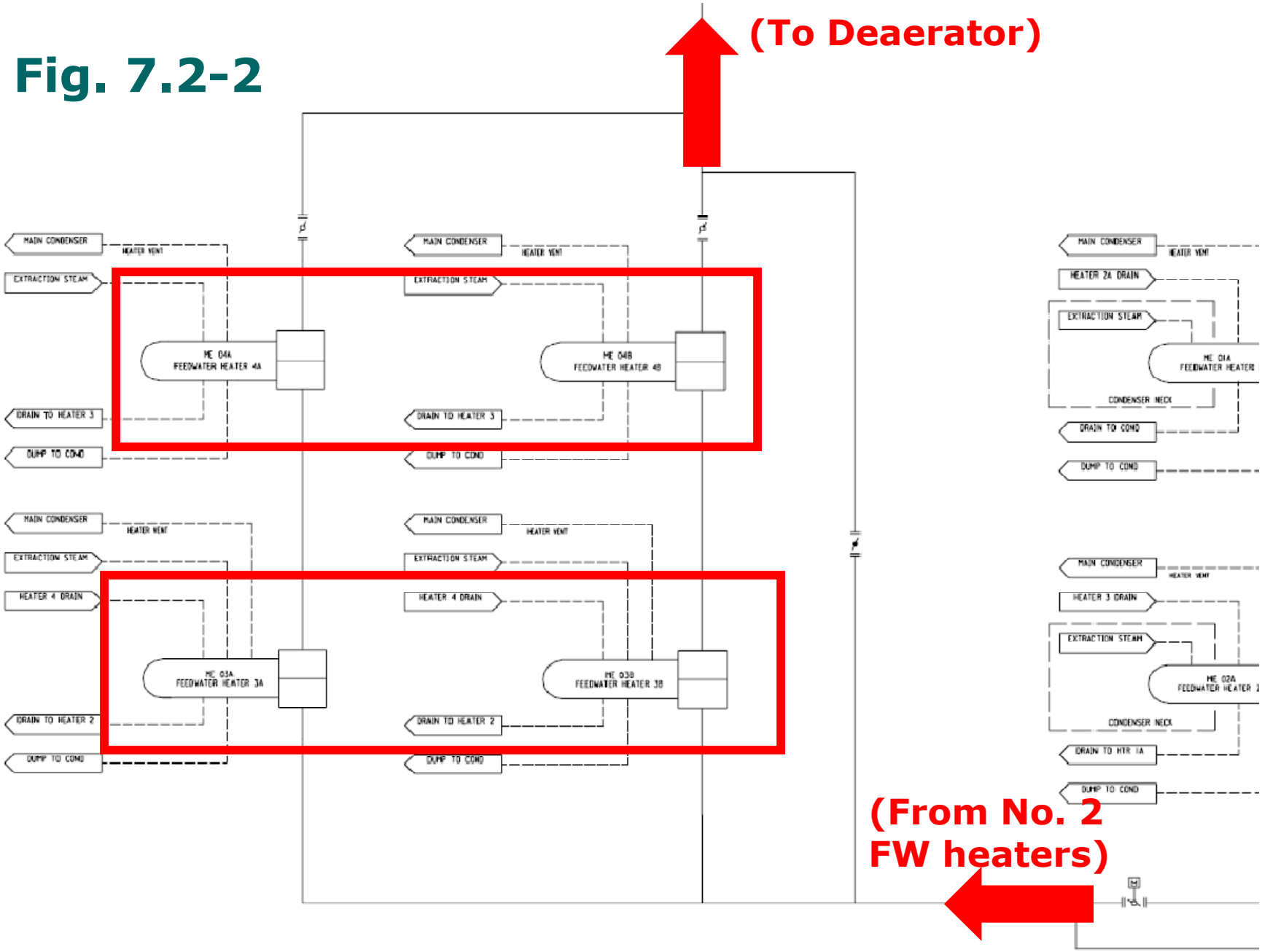
(To Deaerator)
MAIN CONDENSER
HEATER VENT
EXTRACTION STEAM
ME 04A
FEEDWATER HEATER 4A
ME 04B
FEEDWATER HEATER 4B
DRAIN TO HEATER 3
DUMP TO COND
HEATER 4 DRAIN
ME 03A
FEEDWATER HEATER 3A
ME 03B
FEEDWATER HEATER 3B
DRAIN TO HEATER 2
HEATER 2A DRAIN
ME 01A
FEEDWATER HEATER
CONDENSER NECK
DRAIN TO COND
HEATER 3 DRAIN
ME 02A
DRAIN TO HTR 1A
(From No. 2
FW heaters)

LP Heaters – Simplified Diagram

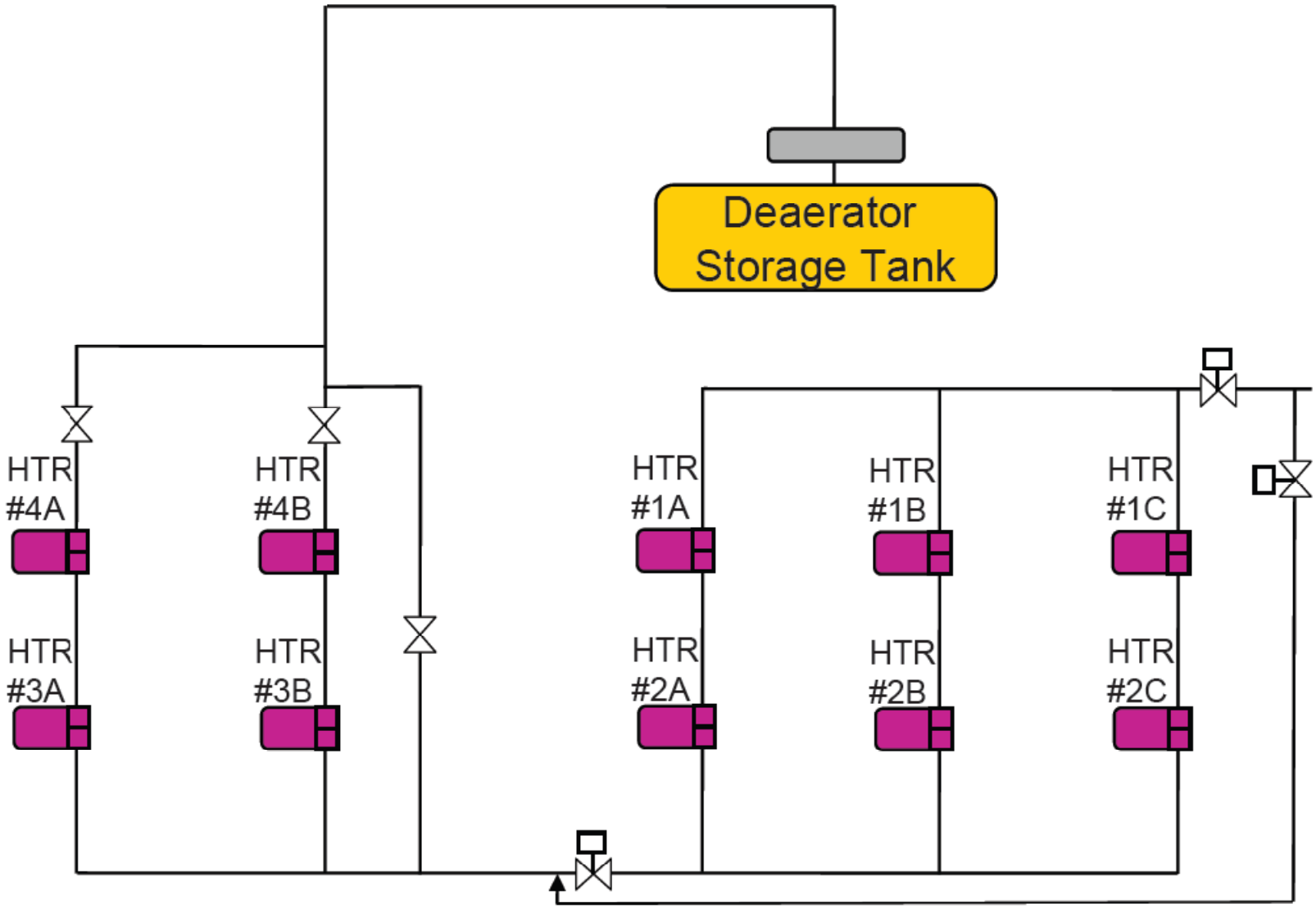

Fig. 7.2-2

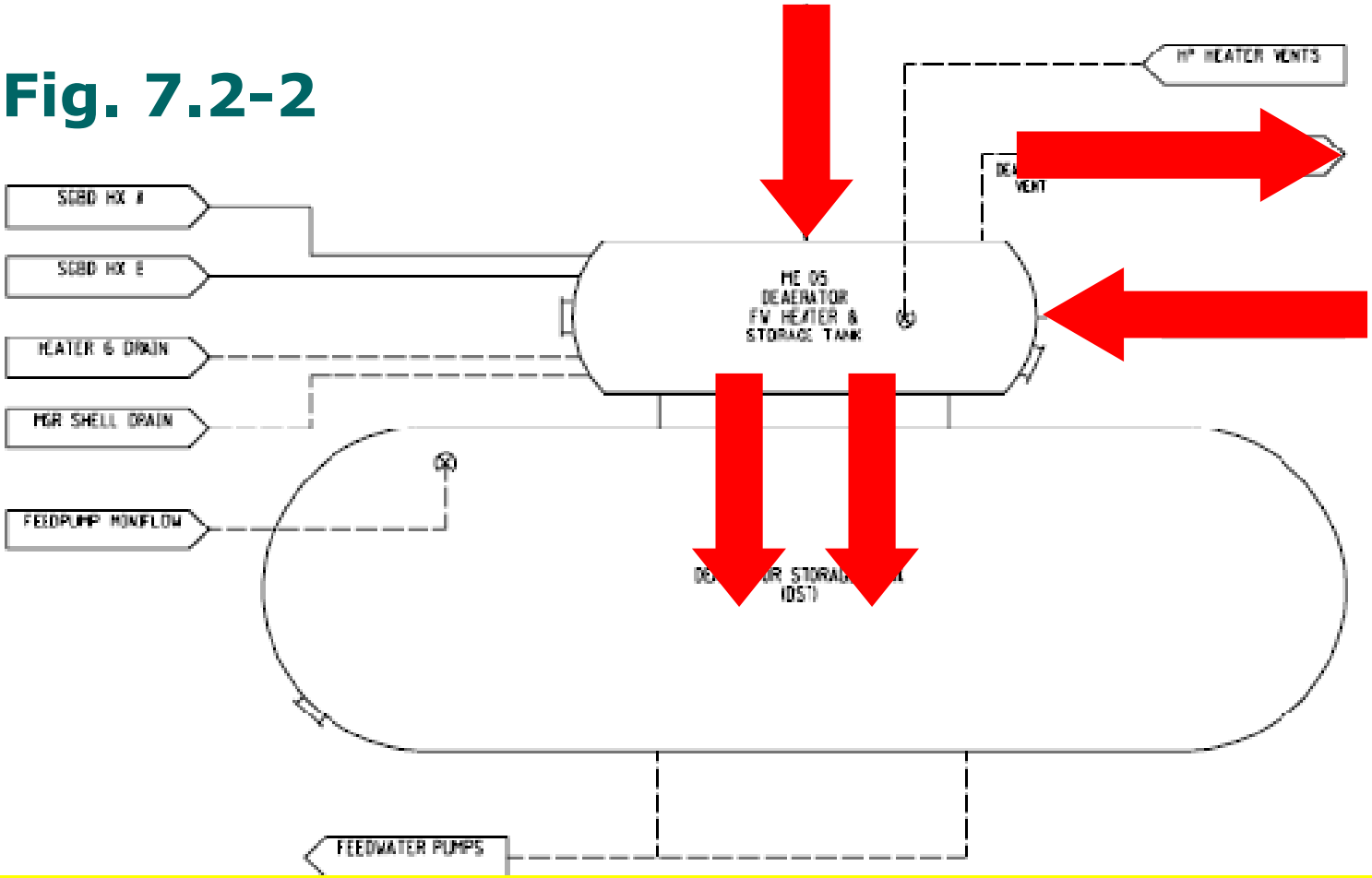

Deaerator (also an open FW heater)

- **HP turbine exhaust steam for heating**
- **FW cascades through tray section**
- **Dissolved gases come out of solution, vent to condenser**
- **Heated condensate collects in DST**

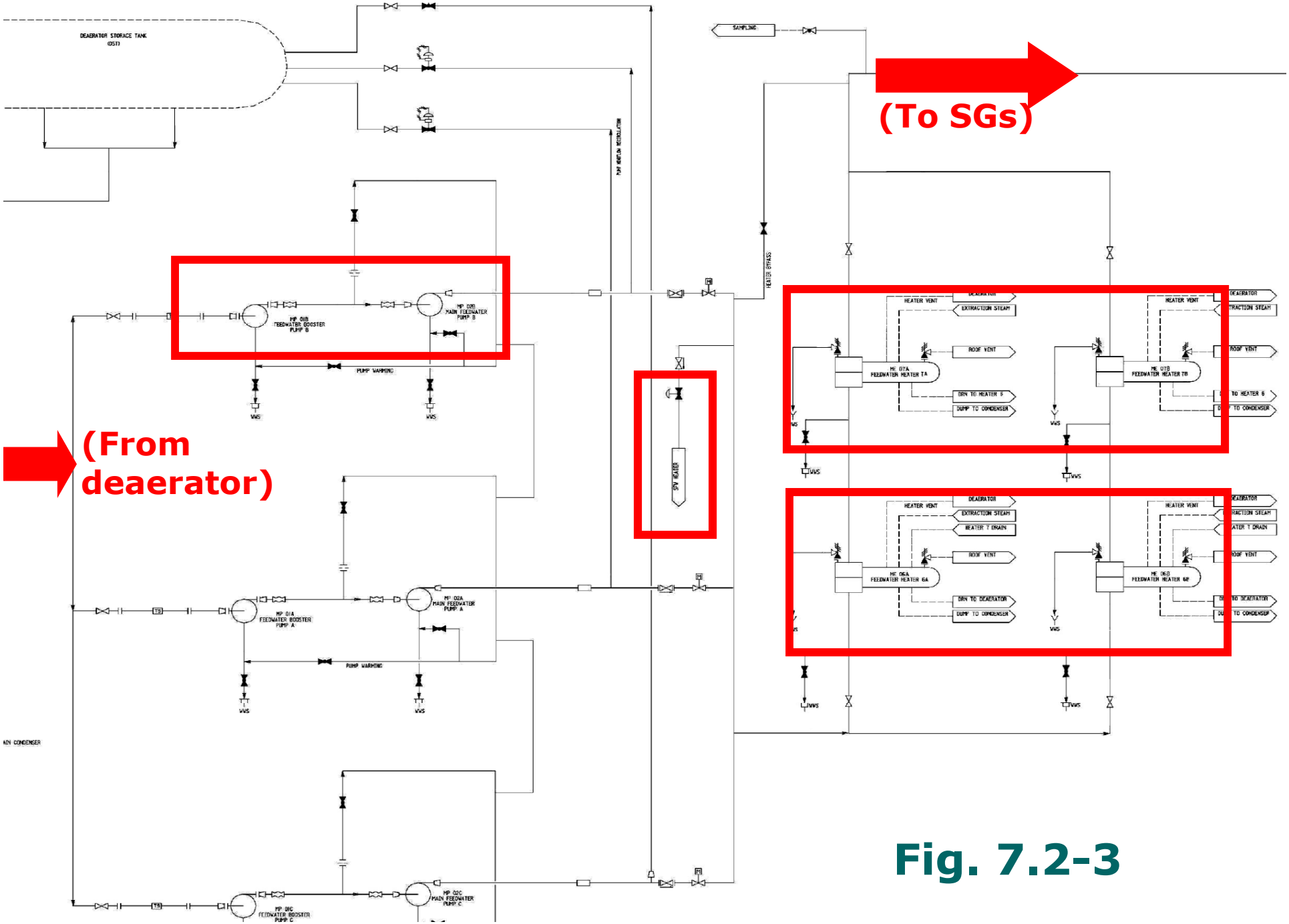
DEAERATOR STORAGE TANK
(DST)
SAMPLING
(To SGs)
(From deaerator)
MP 01B
FEEDWATER BOOSTER
PUMP B
MP 02B
MAIN FEEDWATER
PUMP B
PUMP WARMING
VWS
MP 01A
FEEDWATER BOOSTER
PUMP A
MP 02A
MAIN FEEDWATER
PUMP A
MP 01C
FEEDWATER BOOSTER
PUMP C
MP 02C
MAIN FEEDWATER
PUMP C
SGW HEATER
HEATER BYPASS
HEATER VENT
EXTRACTION STEAM
ROOF VENT
DRN TO HEATER 5
DUMP TO CONDENSER
ME 07A
FEEDWATER HEATER 7A
ME 07B
FEEDWATER HEATER 7B
DRN TO HEATER 6
DEAERATOR
HEATER 7 DRAIN
ME 06A
FEEDWATER HEATER 6A
ME 06B
FEEDWATER HEATER 6B
DRN TO DEAERATOR

Fig. 7.2-3

FW Pumps, HP Heaters – Simplified Diagram

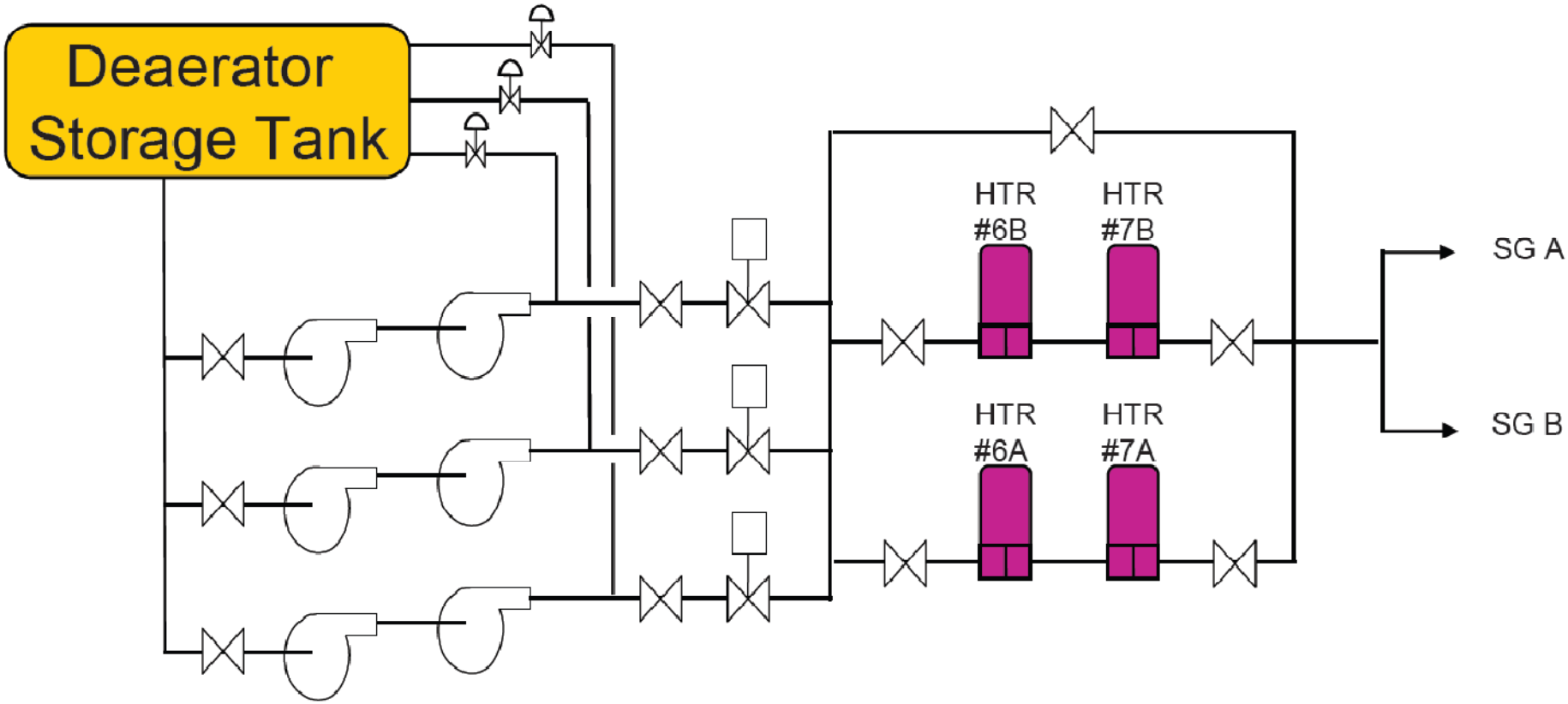

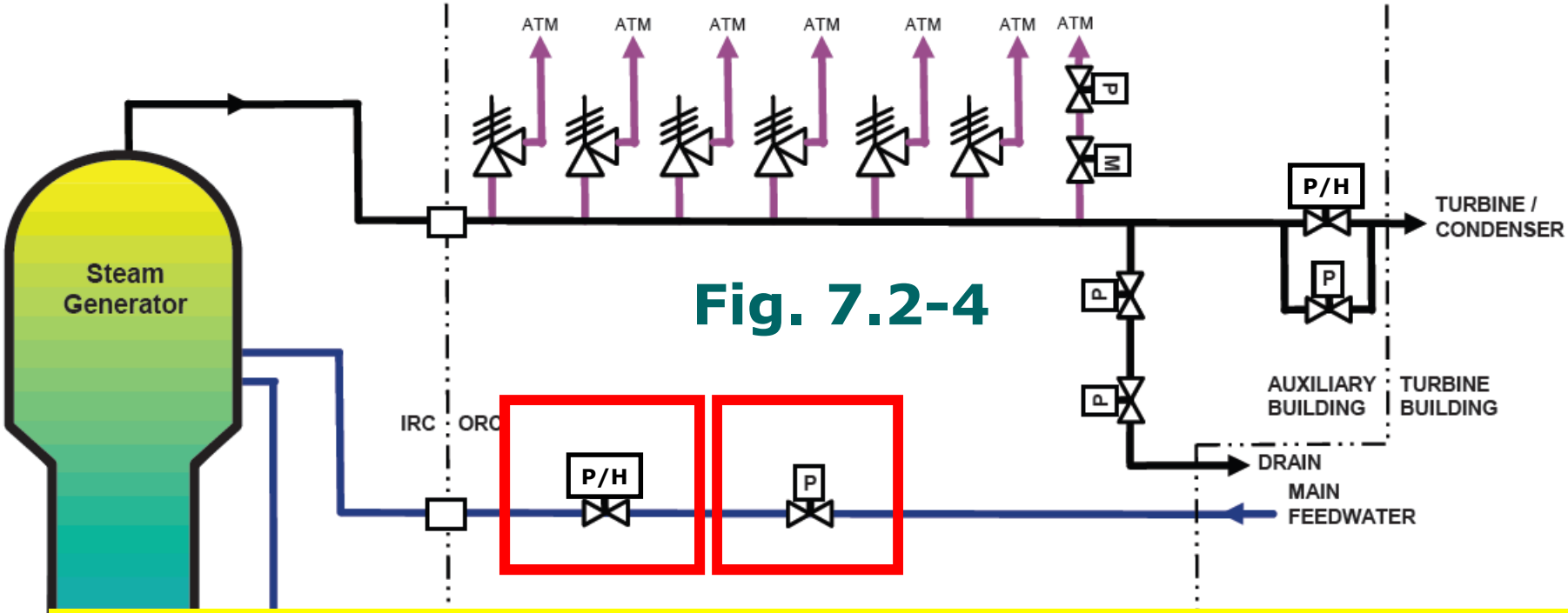

Seismic Category I back to piping restraint at aux. bldg/turb. bldg interface.
FW isolation signals (close MFIVs, MFCVs, cross-connect to SUFW; trip MFW pumps):

- **Safeguards actuation**
- **High-2 SG NR level**
- **Reactor trip + Low-1 T_{avg} (550°F) for MFCVs**
- **Reactor trip + Low-2 T_{avg} (542°F) for others**
- **Manual**

7.2 Condensate & FW System Objective 2

Major differences?

- **Use of deaerator. Not standard in existing plants. Removal of dissolved gases is an additional anticorrosion measure.**

- **All motor-driven FW pumps. FW pumps in existing plants are typically turbine driven.**

7.3 Startup Feedwater System Objectives

1. **State the purposes of the startup feedwater system.**

2. **List the 2 sources of water for the startup feedwater system, & state when each is used.**

3. **List the automatic start signals for the startup feedwater system.**

Startup Feedwater System Purposes

1. **To provide feedwater to the steam generators during transients in the event of main feedwater system unavailability, and**

2. **To provide feedwater to the steam generators during plant startup, hot standby, and shutdown conditions.**

Fig. 7.3-1

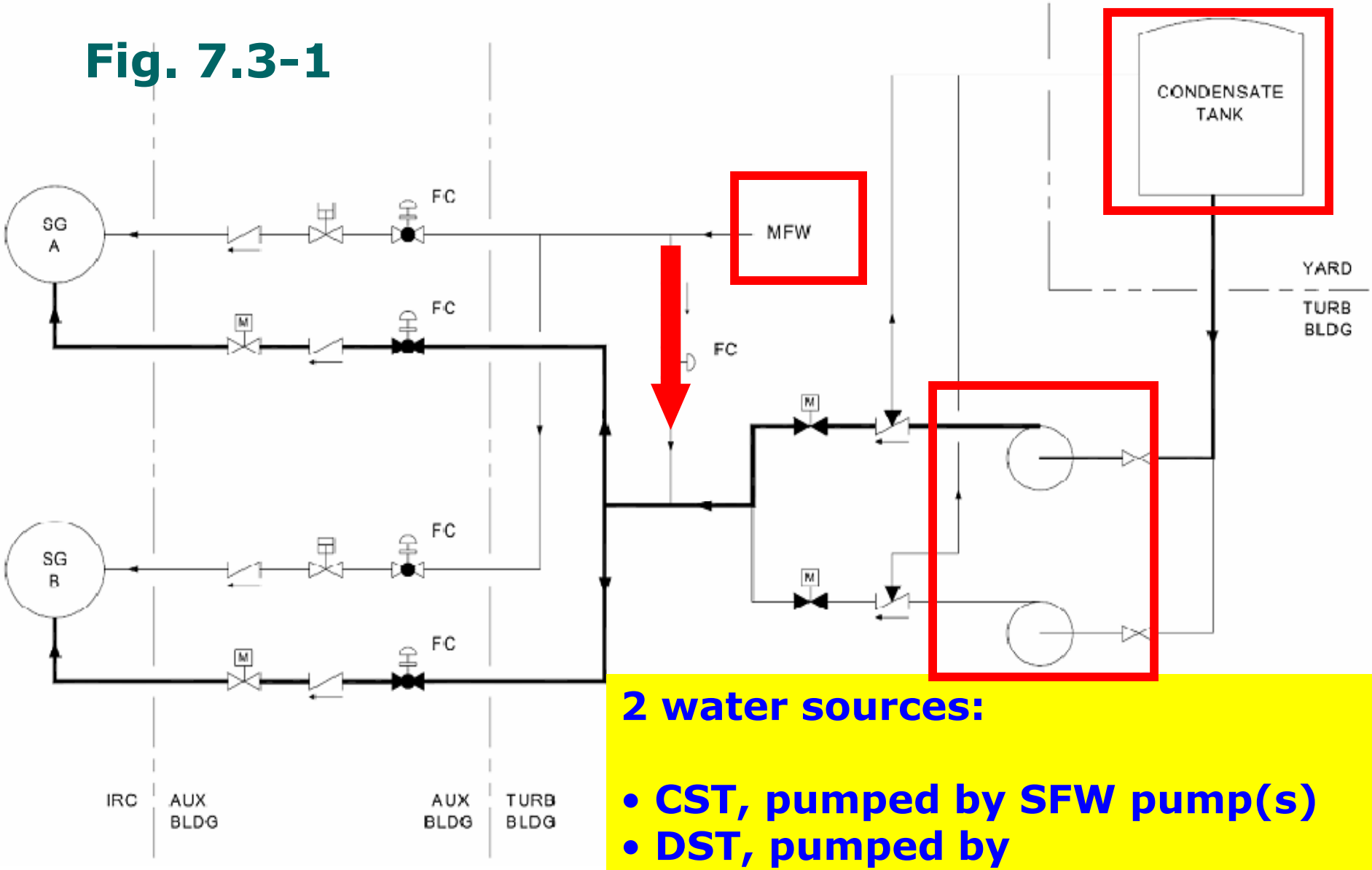

2 water sources:

- **CST, pumped by SFW pump(s)**
- **DST, pumped by booster/MFW pump**

Fig. 7.3-1

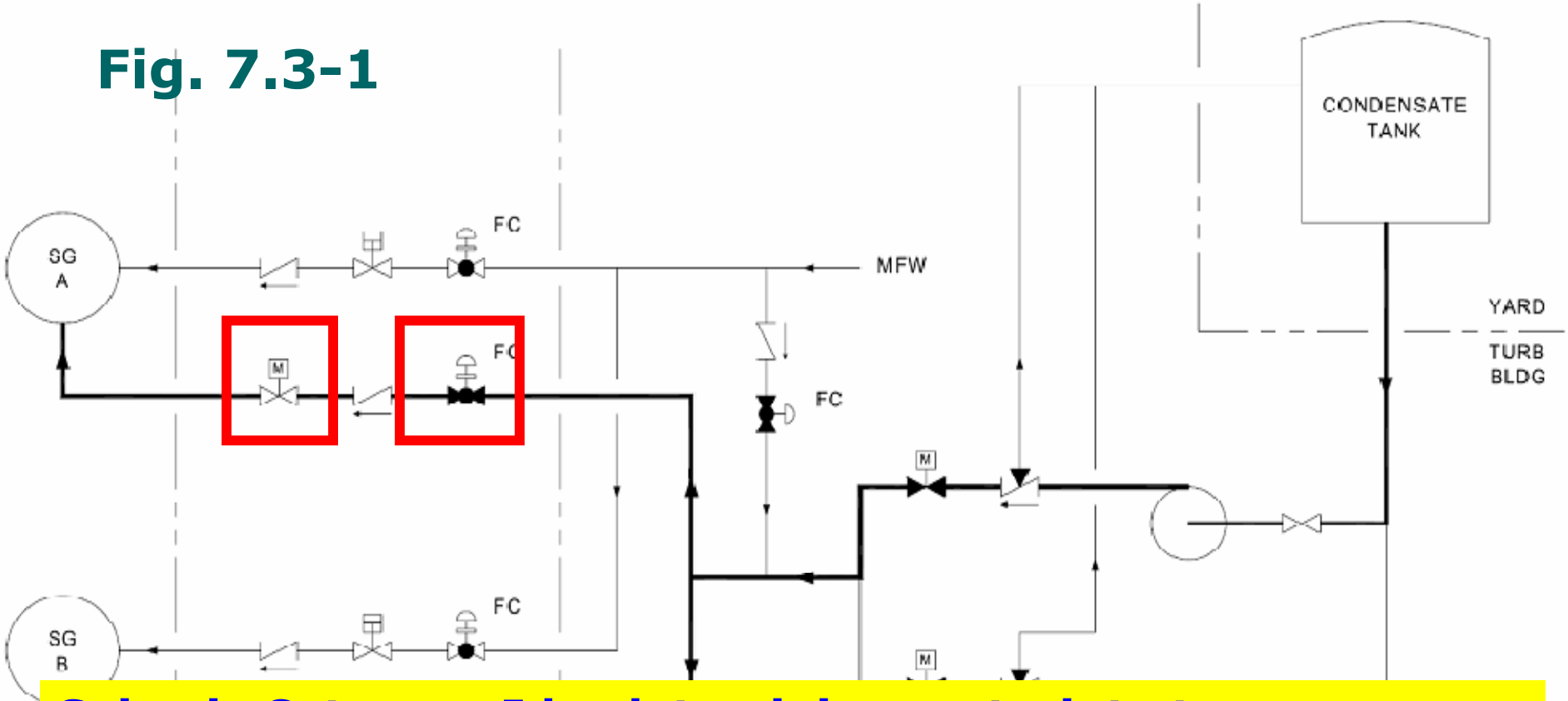

Seismic Category I back to piping restraint at aux. bldg/turb. bldg interface (otherwise nonsafety-related).
SUFW isolation (closes SUFIVs, SUFCVs) signals:

- **High-2 SG NR level**
- **Low T_{cold}**
- **High SG NR level + P-4 (reactor trip)**
- **Manual**

Fig. 7.3-1

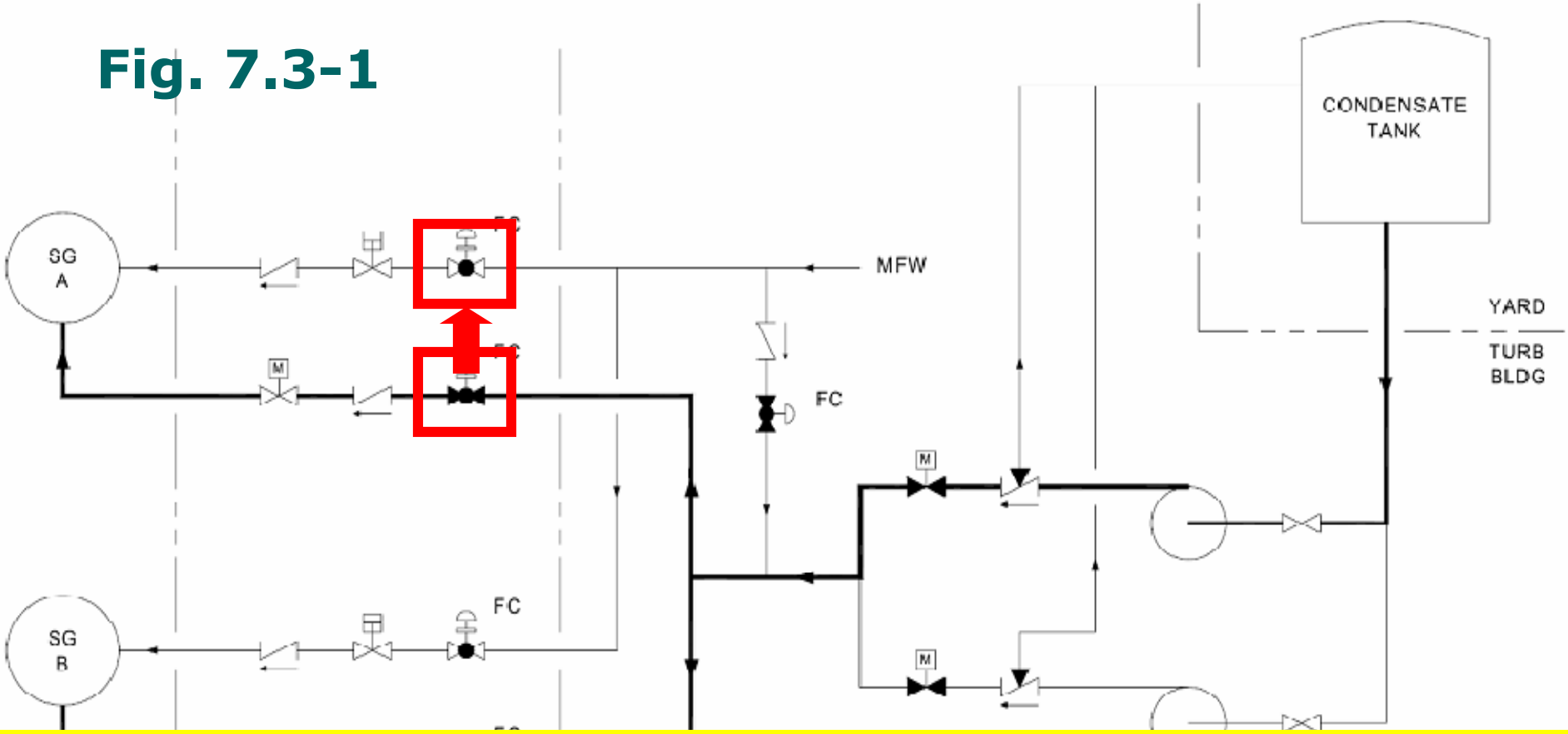

Typical operation:

Supplies flow when FW demands are low.
SUFCVs provide auto SG level control.
Flow can be provided by SUFW pump(s) or MFW pump.
Auto transfer from SUFCVs to MFCVs with increasing demand.

Auto SUFW Pump Start Signals

1. **Low MFW flow + low SG level**
2. **Low-low SG level**

SUFW pumps start when there is insufficient MFW flow (quasi-AFW function).

SUFW should be available during normal reactor shutdowns for decay heat removal.

7.4 Balance of Plant Systems Objectives

1. **State the purposes of the major components of the balance of plant systems.**

2. **Describe the major differences between the balance of plant systems of the AP1000 & currently operating Westinghouse plants.**

7.4.1
Main Condenser

- **Purpose:** secondary-cycle heat sink; receives exhaust steam from main turbine
- 3-shell unit, 1 for each LP turbine
- No. 1 & 2 FW heaters in each shell
- Auto hotwell level control via makeup from & reject to CST
- Air-inleakage, noncondensable gases removed

7.4.2
Main Condenser Evacuation System

- **Purpose:** remove air & noncon-densable gases from condenser
- 4 vacuum pumps; 1 per condenser shell, 1 spare
- Pump discharge to atmosphere via monitored vent path; high radiation indicates primary-to-secondary leakage
- Loss of air removal system means loss of condenser vacuum

7.4.3
Gland Seal System

- **Purpose:** supply sealing steam to glands where HP & LP turbine shafts penetrate casings
- Steam supply from aux. boiler or main steam
- Air & excess seal steam drawn to gland seal condenser by exhaust blower
- Blower discharge to atmosphere via monitored vent path; high radiation indicates pri-to-sec leakage

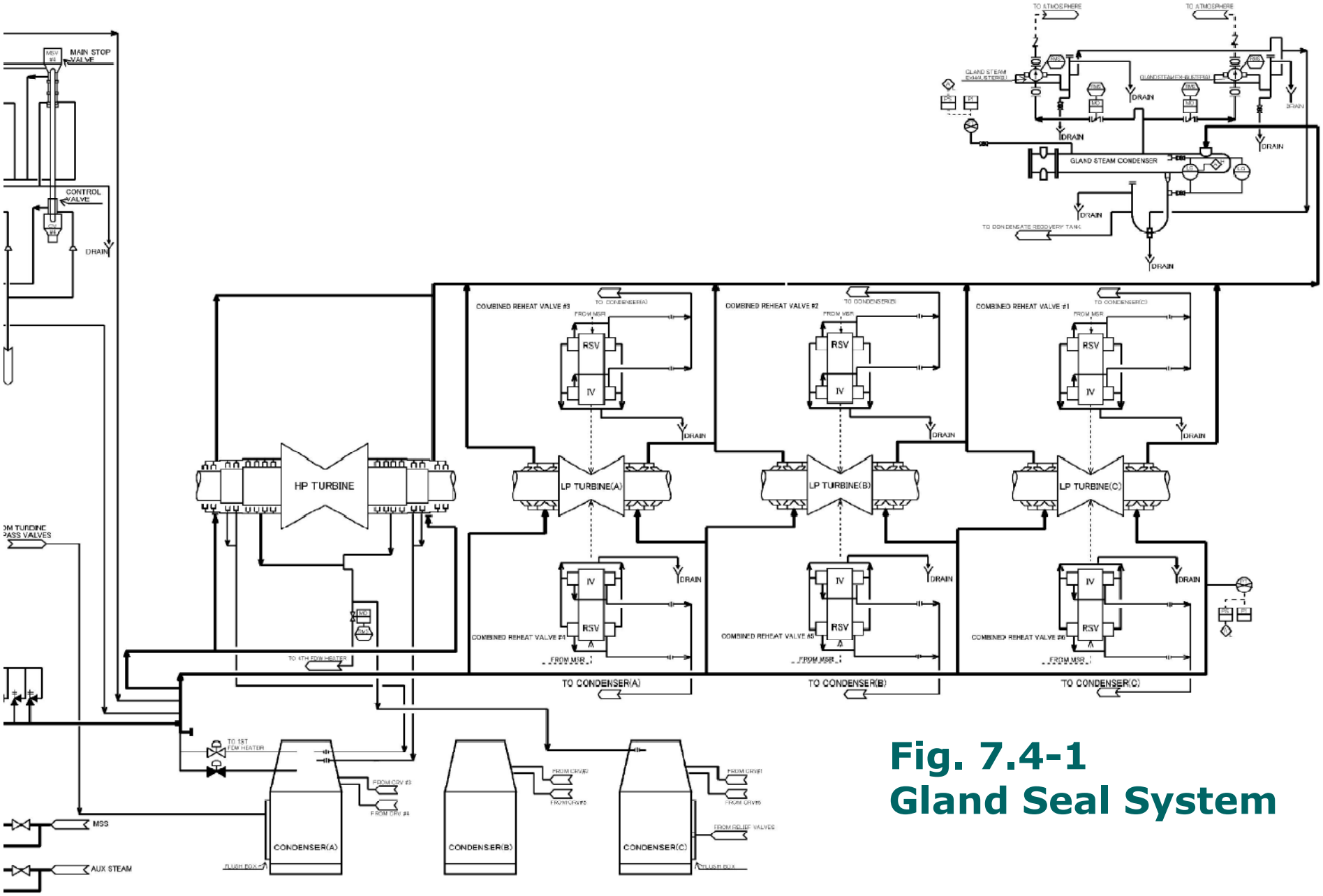

Fig. 7.4-1
Gland Seal System

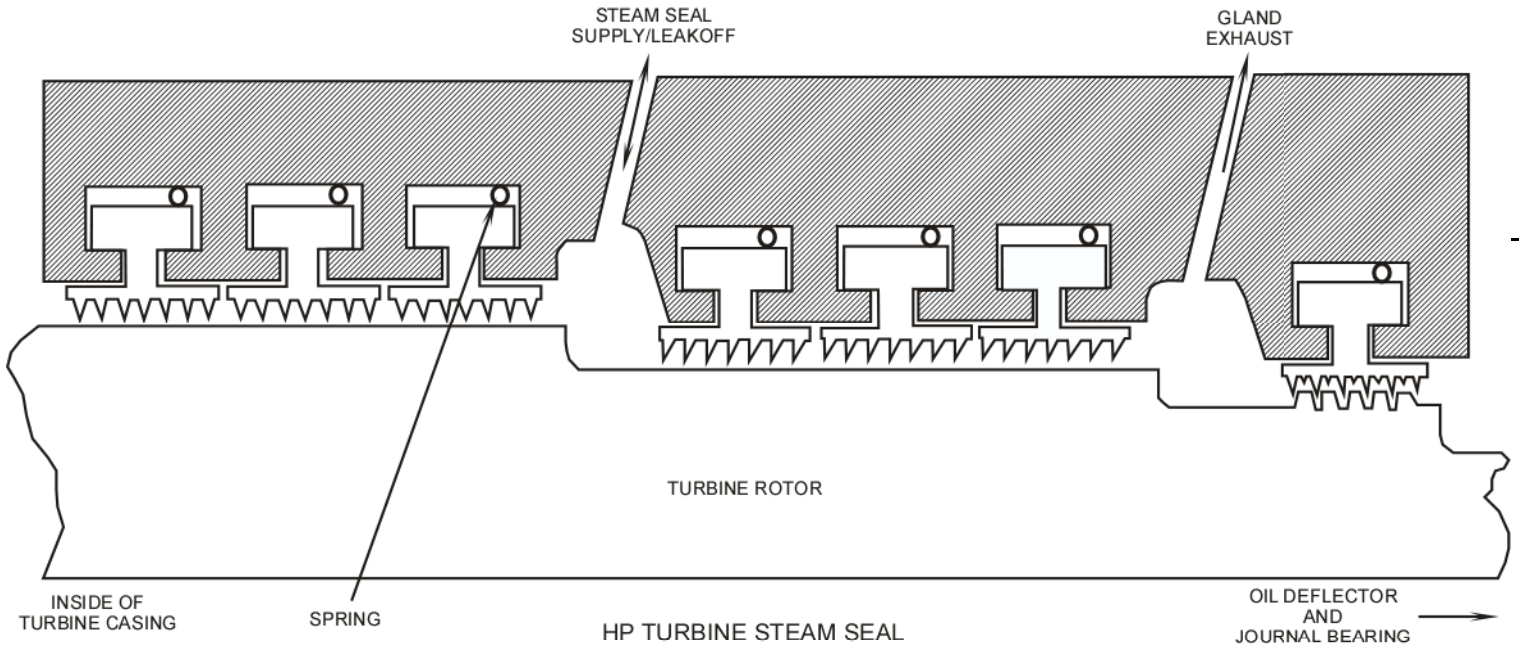

Turbine Glands

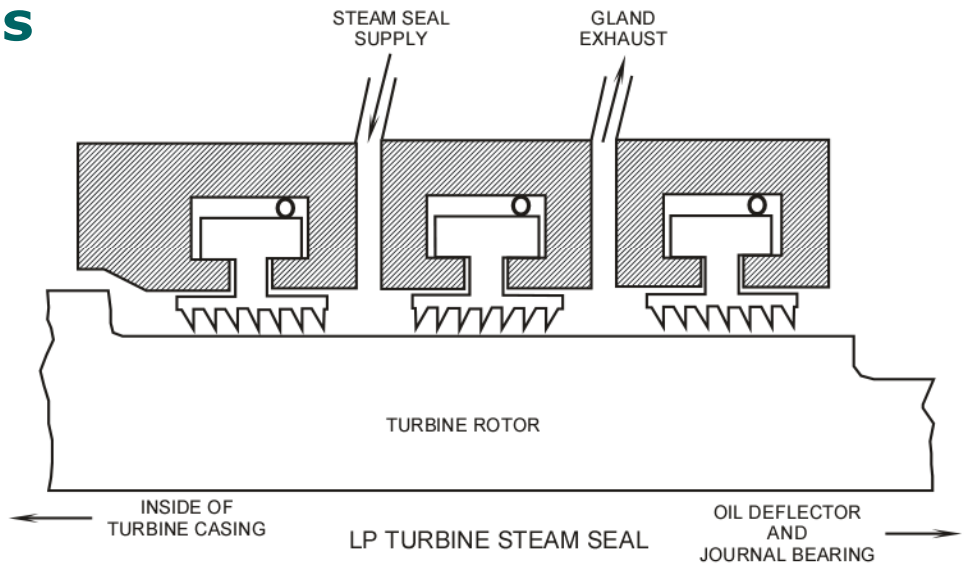

7.4.4
Turbine Bypass System

- **Purpose:** provides capability to bypass main steam to condenser to minimize transient effects with turbine off-line & for step load reductions
- Enables avoiding reactor trips during large load rejections
- 40% of full-load capacity
- 6 AO valves in 2 3-valve banks
- Operation like that of existing Westinghouse steam dump systems

7.4.5 Turbine-Generator

- **Purpose:** convert thermal energy into electrical energy
- 1 HP element, 3 LP elements, 2 MSRs
- Extraction steam for FW heating & LP steam reheating
- DEH control system with auto & manual elements for controlling turbine speed, acceleration, load, loading rate

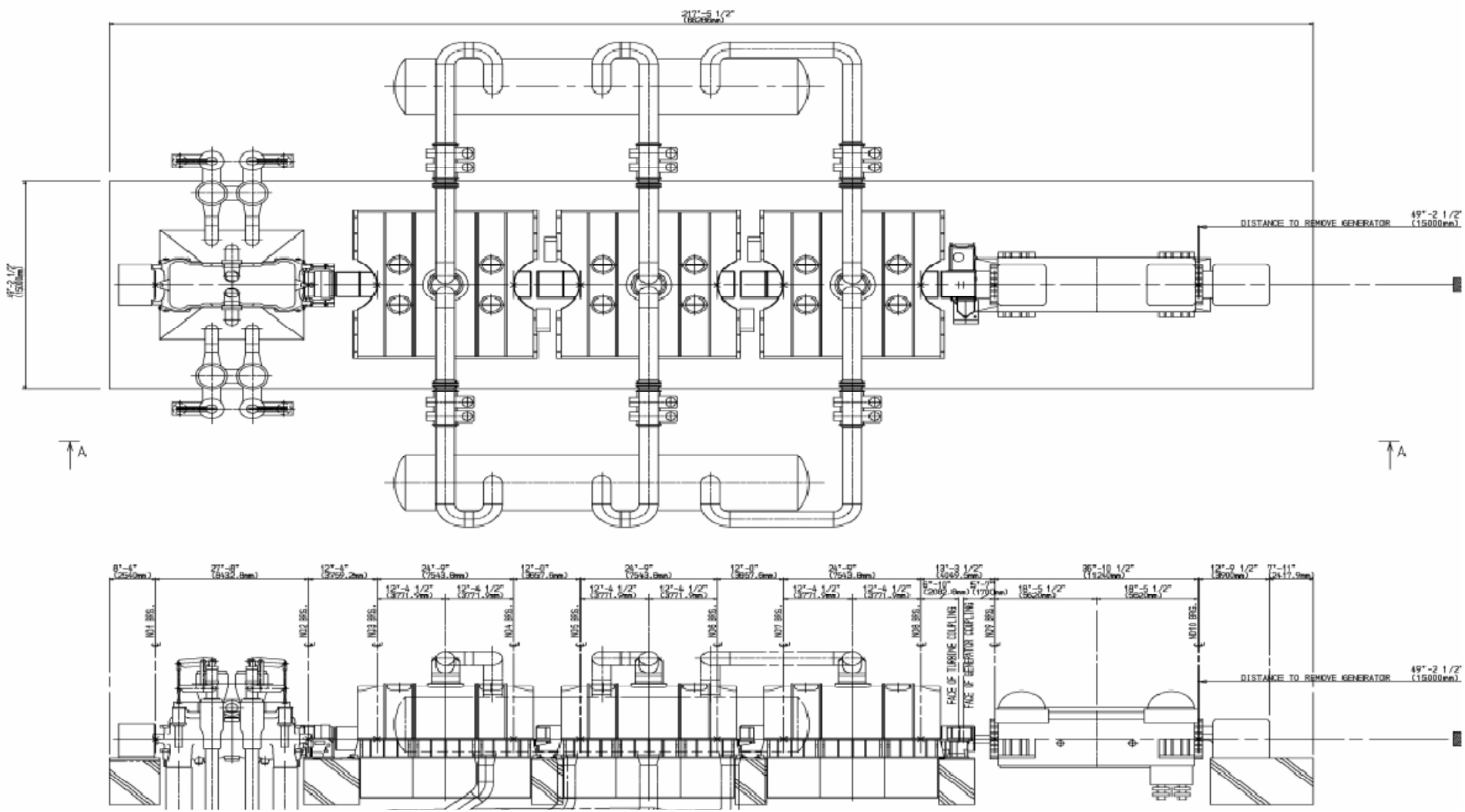

Fig. 7.4-3
Turbine-Generator

7.4 Balance of Plant Systems Objective 2

Major differences?

Nothing major.

TB 1

TB 2

Review: Which of the following is not true concerning the deaerator & its associated storage tank?

a. **Feedwater is preheated there on its way to the steam generators.**
b. **Noncondensable gases are removed there.**
c. **It serves as a suction source for the feedwater booster/ main feedwater pumps.**
d. **It is a shell-and-tube heat exchanger.**

Review: Which of the following is not true concerning the deaerator & its associated storage tank?

a. **Feedwater is preheated there on its way to the steam generators.**
b. **Noncondensable gases are removed there.**
c. **It serves as a suction source for the feedwater booster/ main feedwater pumps.**
d. **It is a shell-and-tube heat exchanger.**

Review: The sources of water to the startup feedwater system are the…

a. **Condensate storage tank (CST) & deaerator storage tank (DST).**
b. **CST & in-containment refueling water storage tank (IRWST).**
c. **DST & IRWST.**
d. **CST & core makeup tanks.**

Review: The sources of water to the startup feedwater system are the…

a. Condensate storage tank (CST) & deaerator storage tank (DST).
b. CST & in-containment refueling water storage tank (IRWST).
c. DST & IRWST.
d. CST & core makeup tanks.

Review: The startup feedwater system is designed for…

a. **Providing feedwater flow to the steam generators at high powers.**
b. **Providing feedwater flow to the steam generators at low powers.**
c. **Providing decay heat removal during accidents.**
d. **Circulating coolant during refuelings.**

Review: The startup feedwater system is designed for…

a. **Providing feedwater flow to the steam generators at high powers.**
b. **Providing feedwater flow to the steam generators at low powers.**
c. **Providing decay heat removal during accidents.**
d. **Circulating coolant during refuelings.**

Review: The startup feedwater pumps would ALWAYS be expected to start…

a. **In response to a safeguards actuation signal.**
b. **When a LOCA is in progress.**
c. **When steam generator levels are trending toward overfill.**
d. **When secondary heat sinks are degrading.**

Review: The startup feedwater pumps would ALWAYS be expected to start…

a. **In response to a safeguards actuation signal.**
b. **When a LOCA is in progress.**
c. **When steam generator levels are trending toward overfill.**
d. **When secondary heat sinks are degrading.**

Review: A design feature of the AP1000 plant which is significantly different from its counterpart in existing plants is…

a. **The use of extraction steam for feedwater heating.**
b. **The use of moisture separator/ reheaters for treating low pressure steam.**
c. **Supplying steam to seal turbine glands.**
d. **None of the above.**

Review: A design feature of the AP1000 plant which is significantly different from its counterpart in existing plants is…

a. **The use of extraction steam for feedwater heating.**
b. **The use of moisture separator/ reheaters for treating low pressure steam.**
c. **Supplying steam to seal turbine glands.**
d. **None of the above.**

Review: The main steam supply system DOES NOT…

a. **Transfer steam to the turbine-generator.**
b. **Provide overpressure protection for the steam generators.**
c. **Provide the driving force for safety-related pumps.**
d. **Provide a path for decay heat removal.**

Review: The main steam supply system DOES NOT…

a. **Transfer steam to the turbine-generator.**
b. **Provide overpressure protection for the steam generators.**
c. **Provide the driving force for safety-related pumps.**
d. **Provide a path for decay heat removal.**

The End