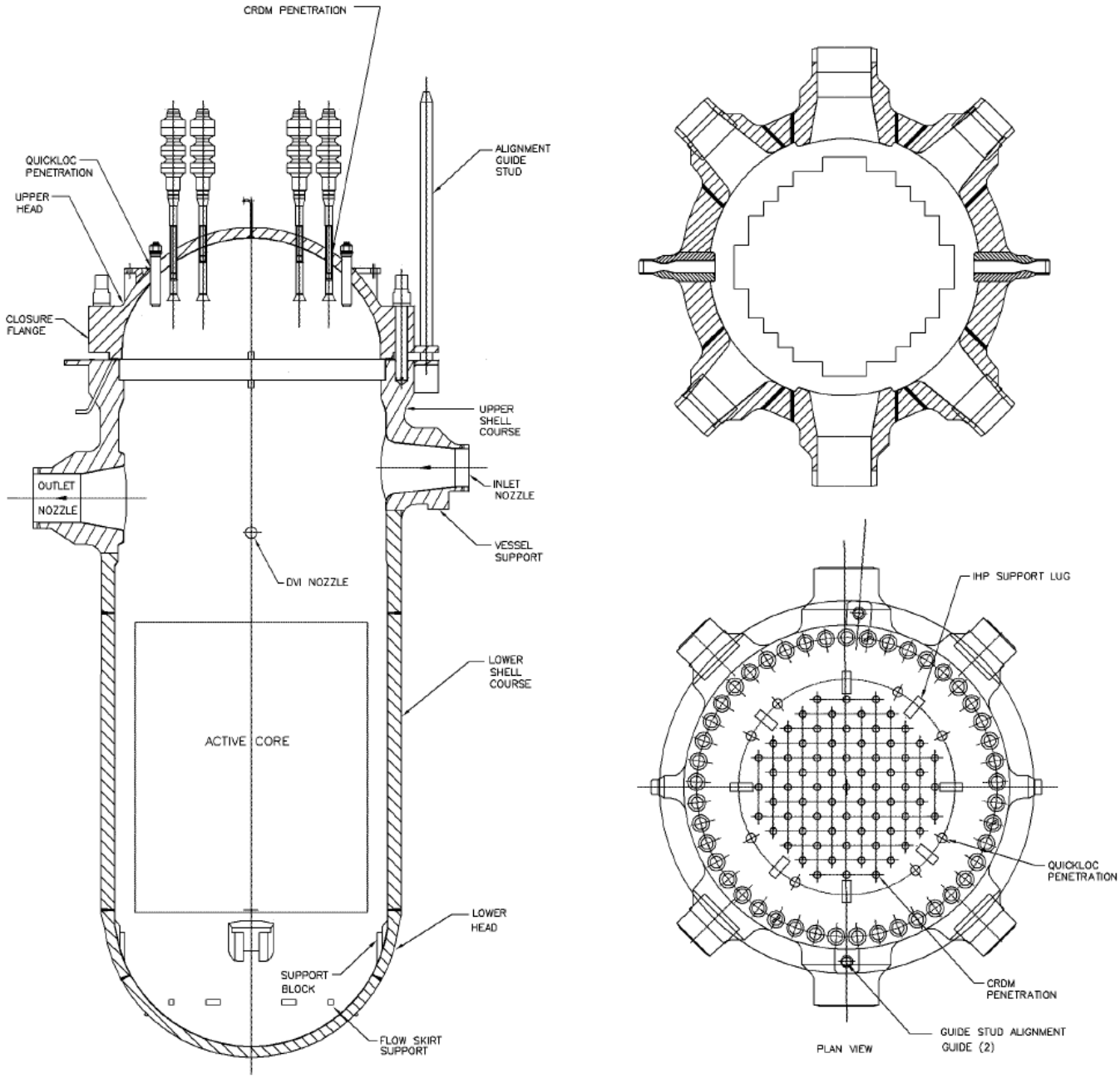

Figure 2-1 AP1000 Reactor Vessel

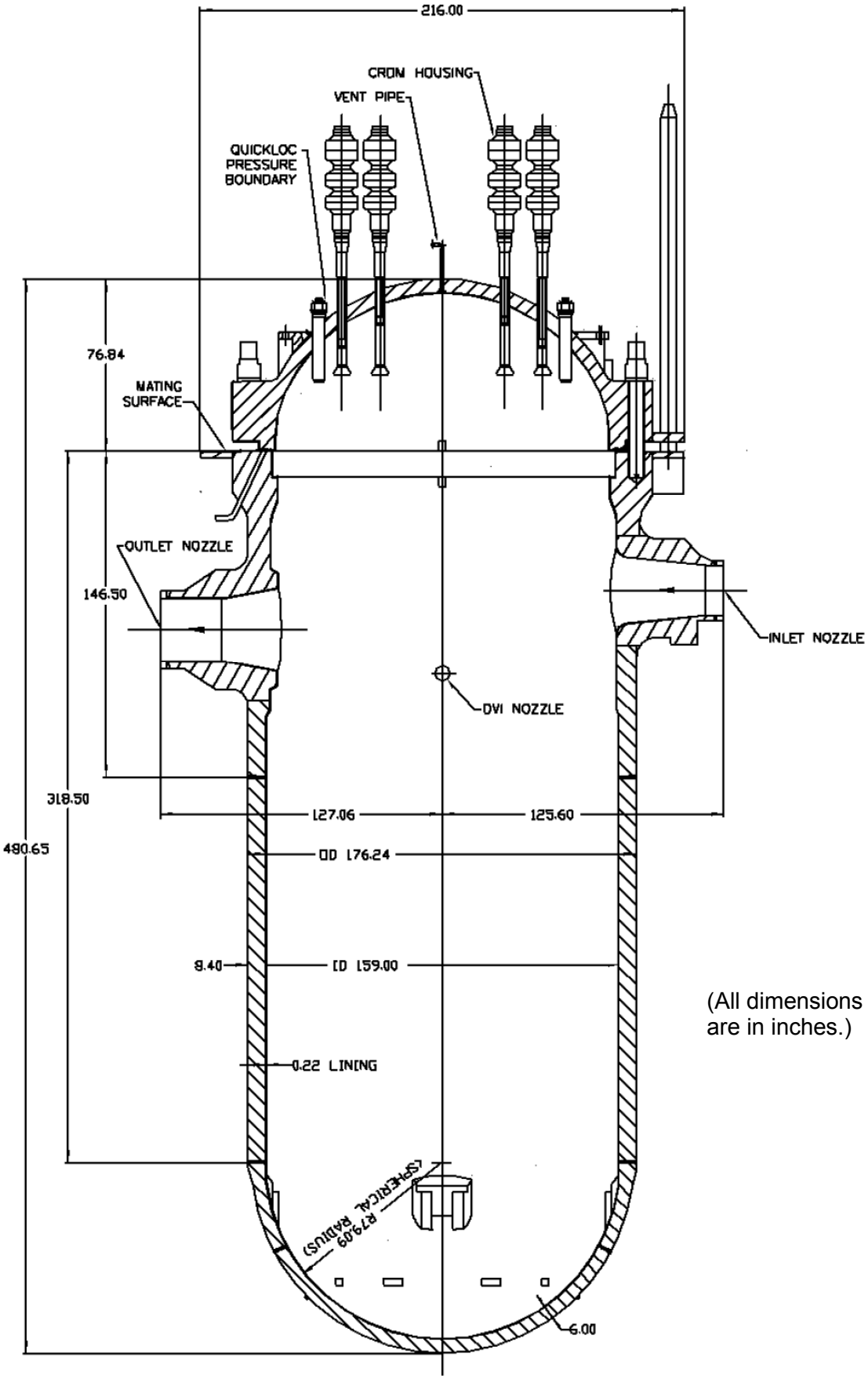

(All dimensions are in inches.)

Figure 2-2 AP1000 Reactor Vessel Dimensions

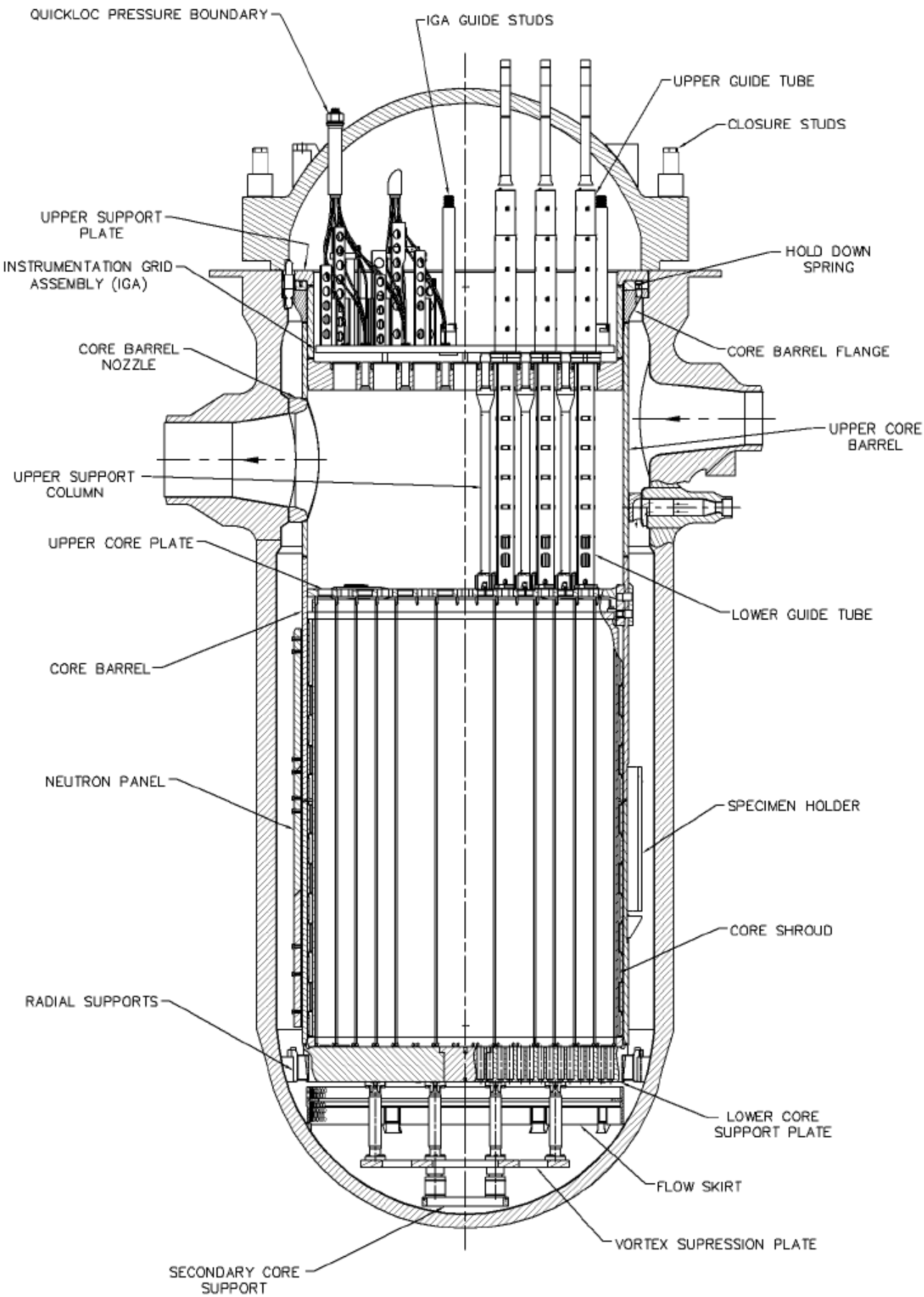

Figure 2-3 AP1000 Reactor Internal Loads

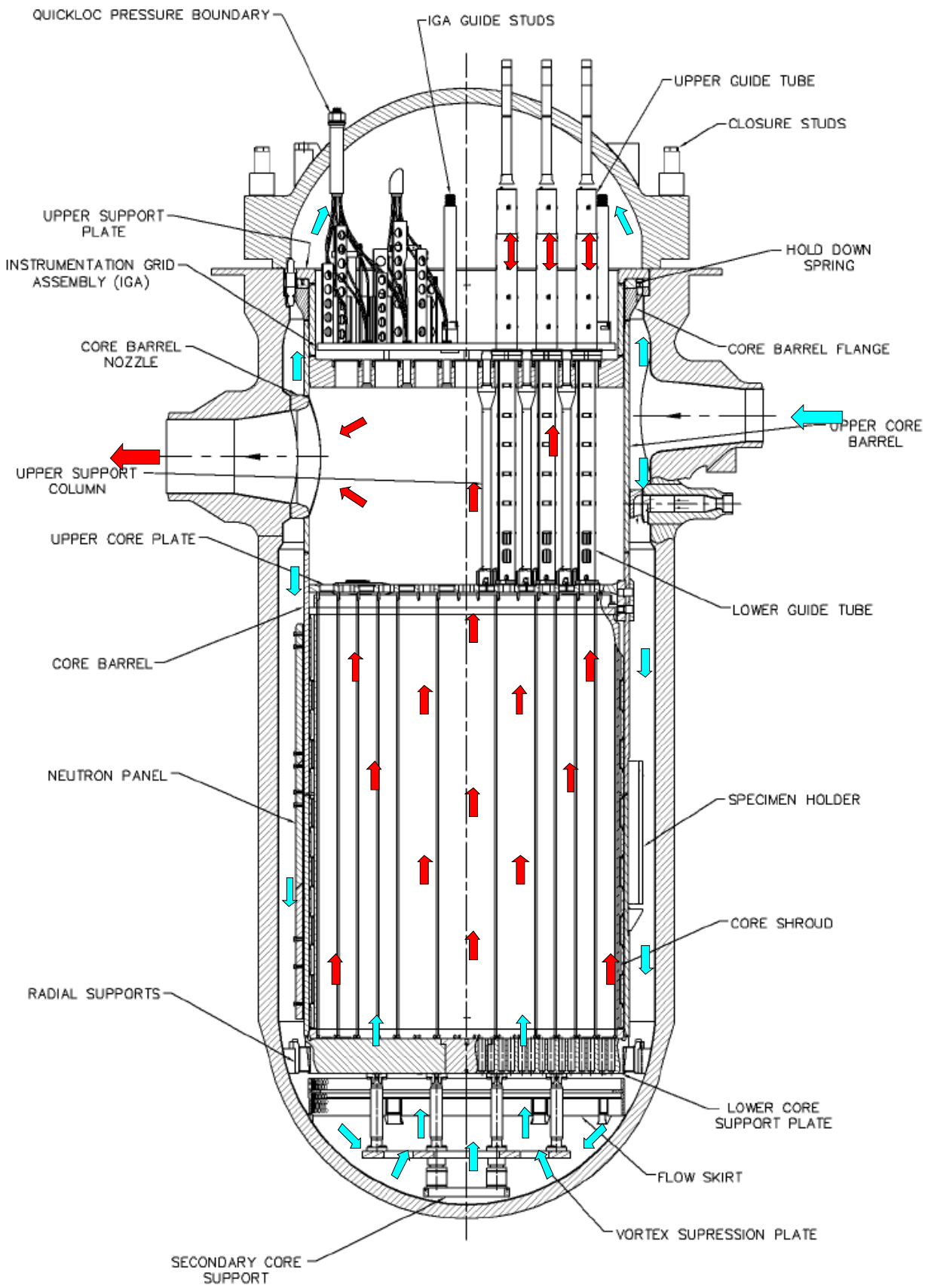

Figure 2-4 AP1000 Reactor Vessel Flowpaths

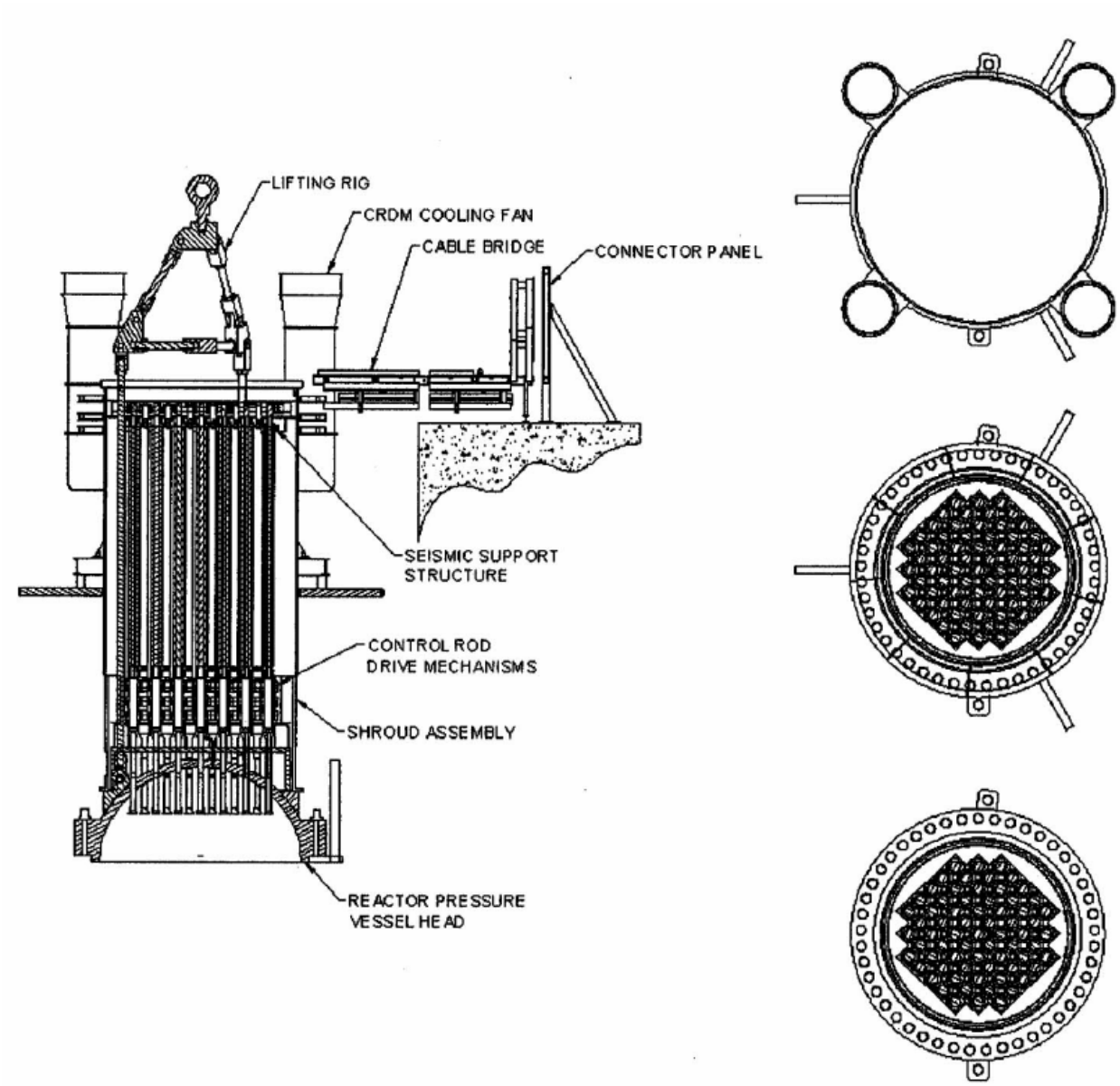

Figure 2-5 AP1000 Integrated Head Package

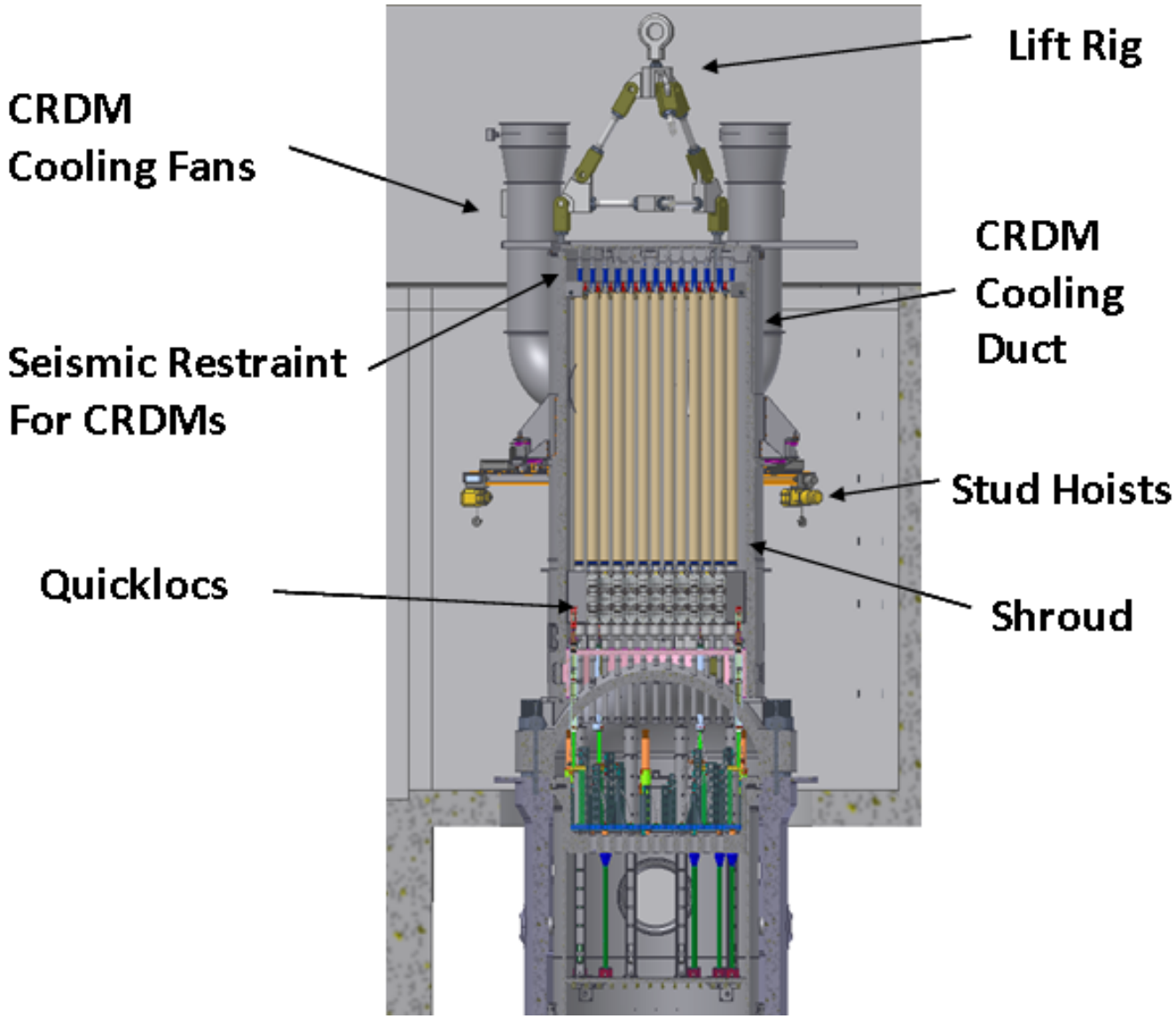

Figure 2-6 AP1000 Integrated Head Package - Details

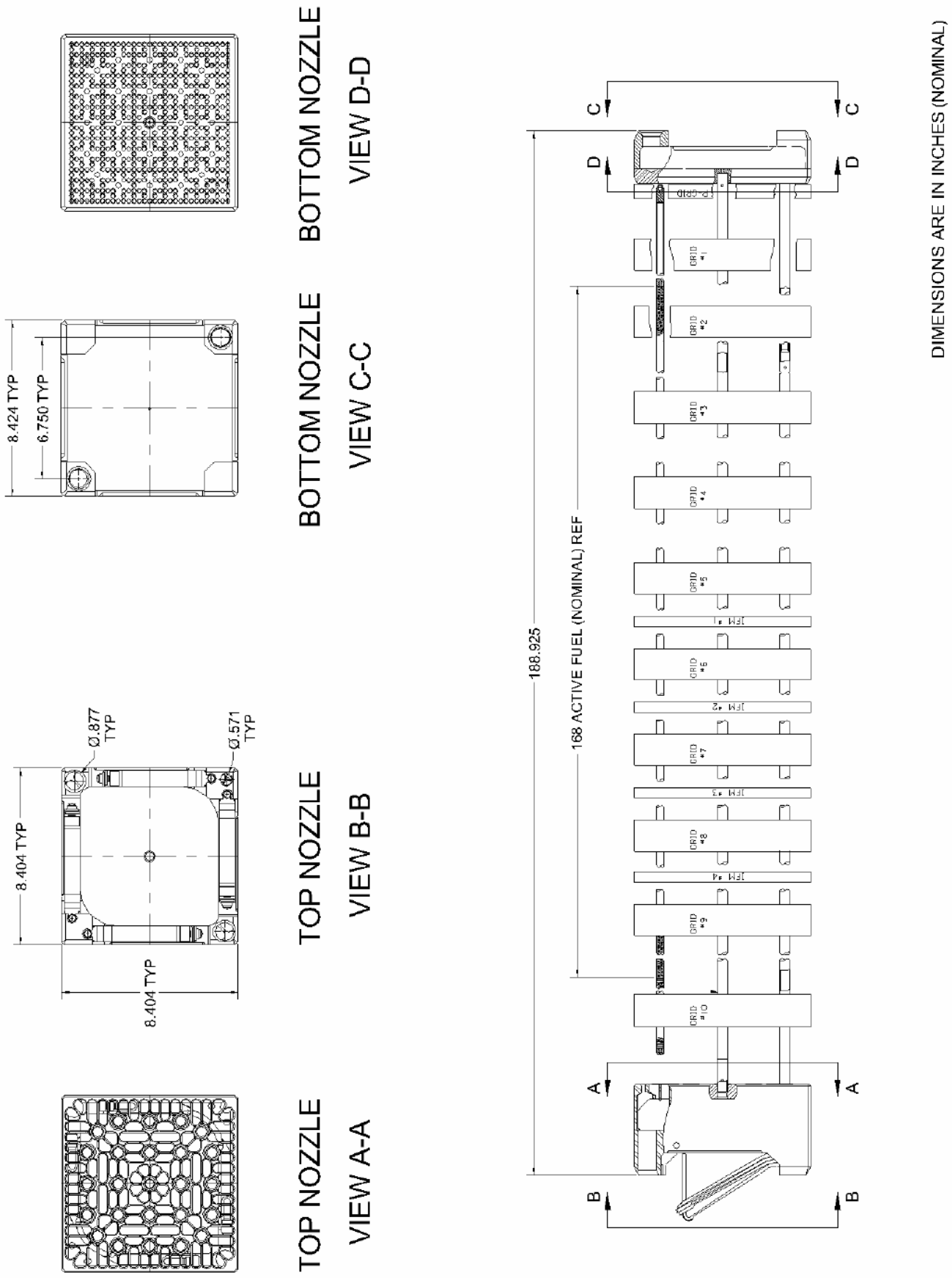

Figure 2-7 AP1000 Fuel Assembly Construction

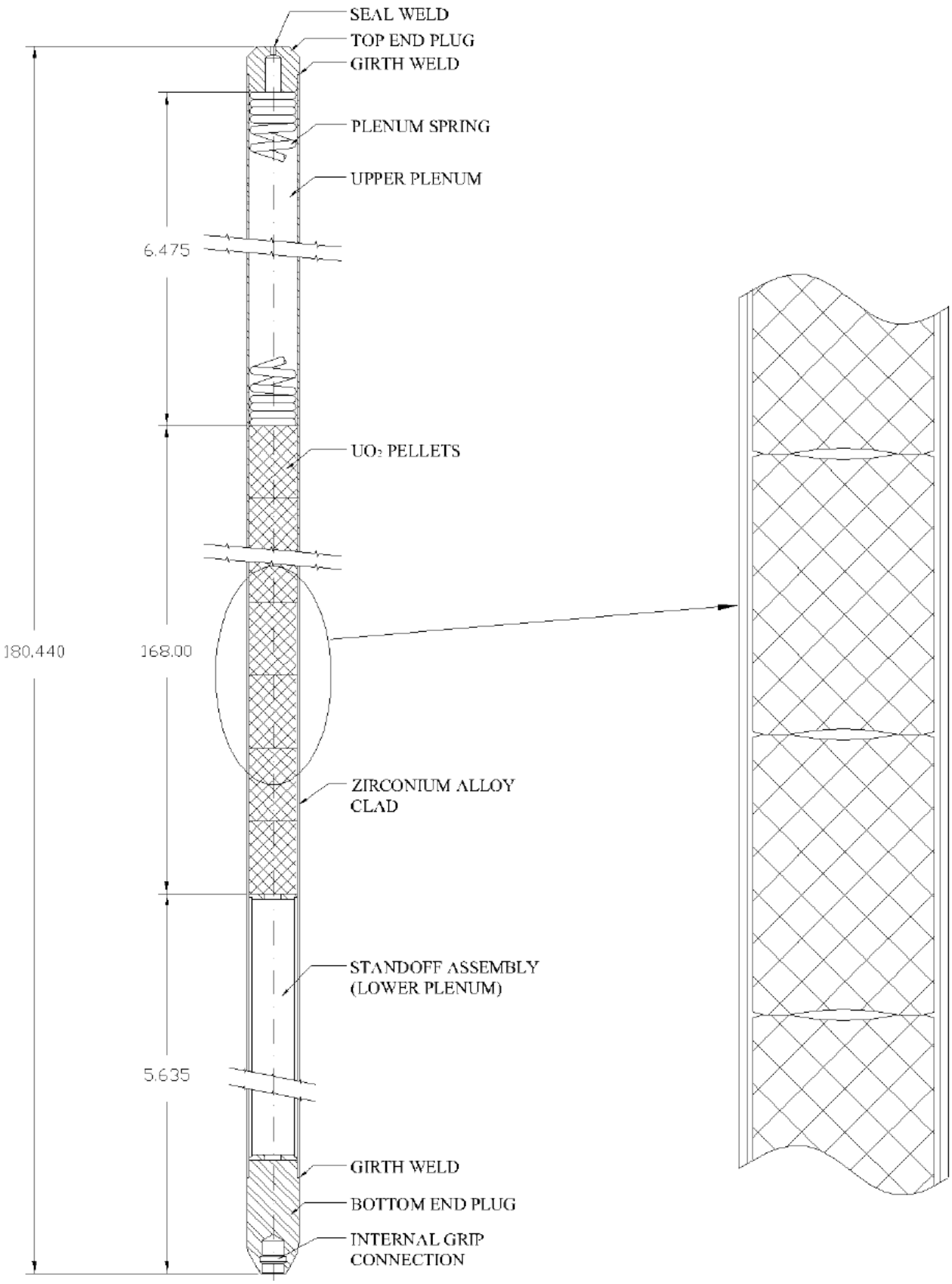

Figure 2-8 AP1000 Fuel Rod Construction

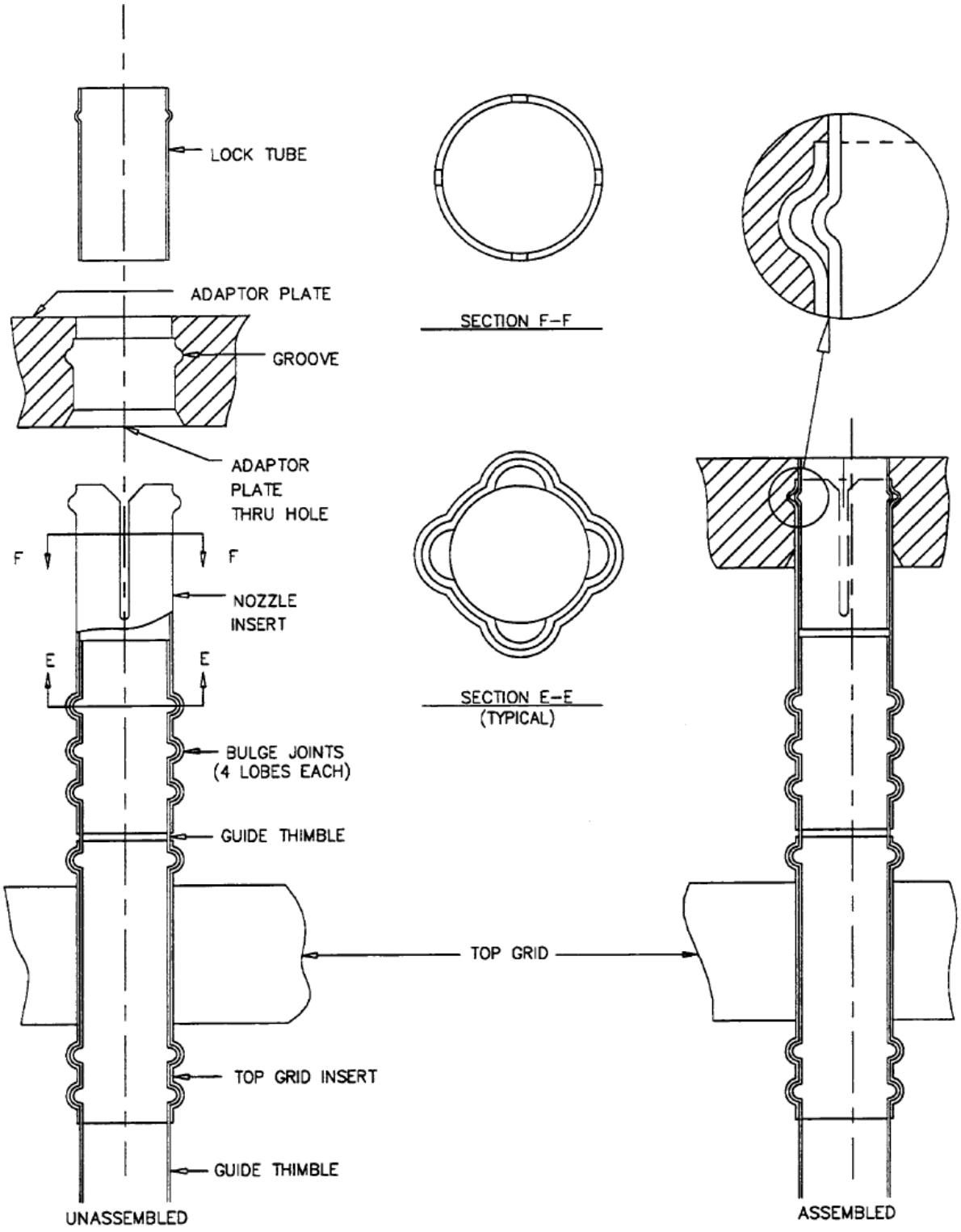

Figure 2-9 Removable Top Nozzle

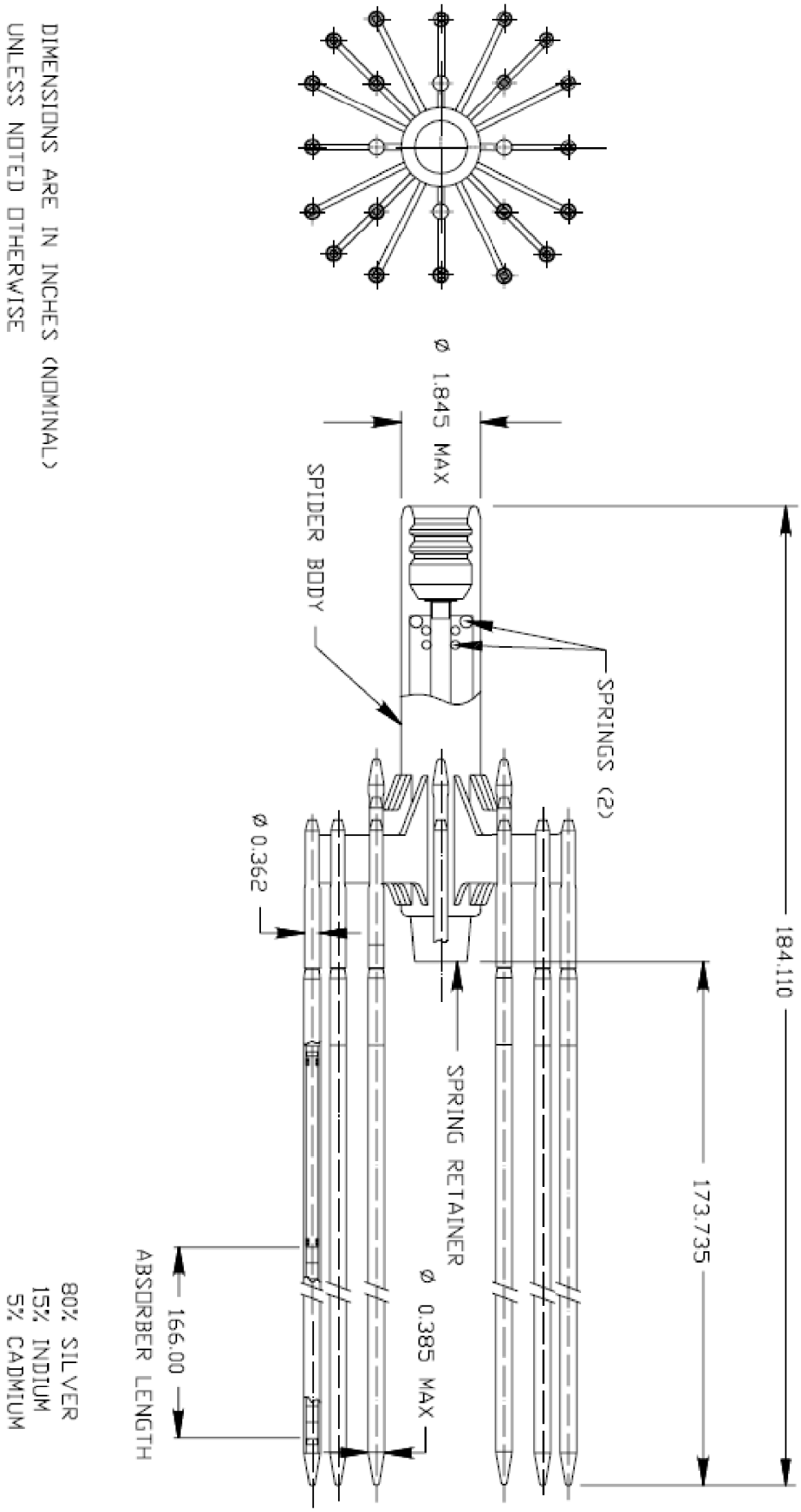

Figure 2-10 Rod Cluster Control Assembly

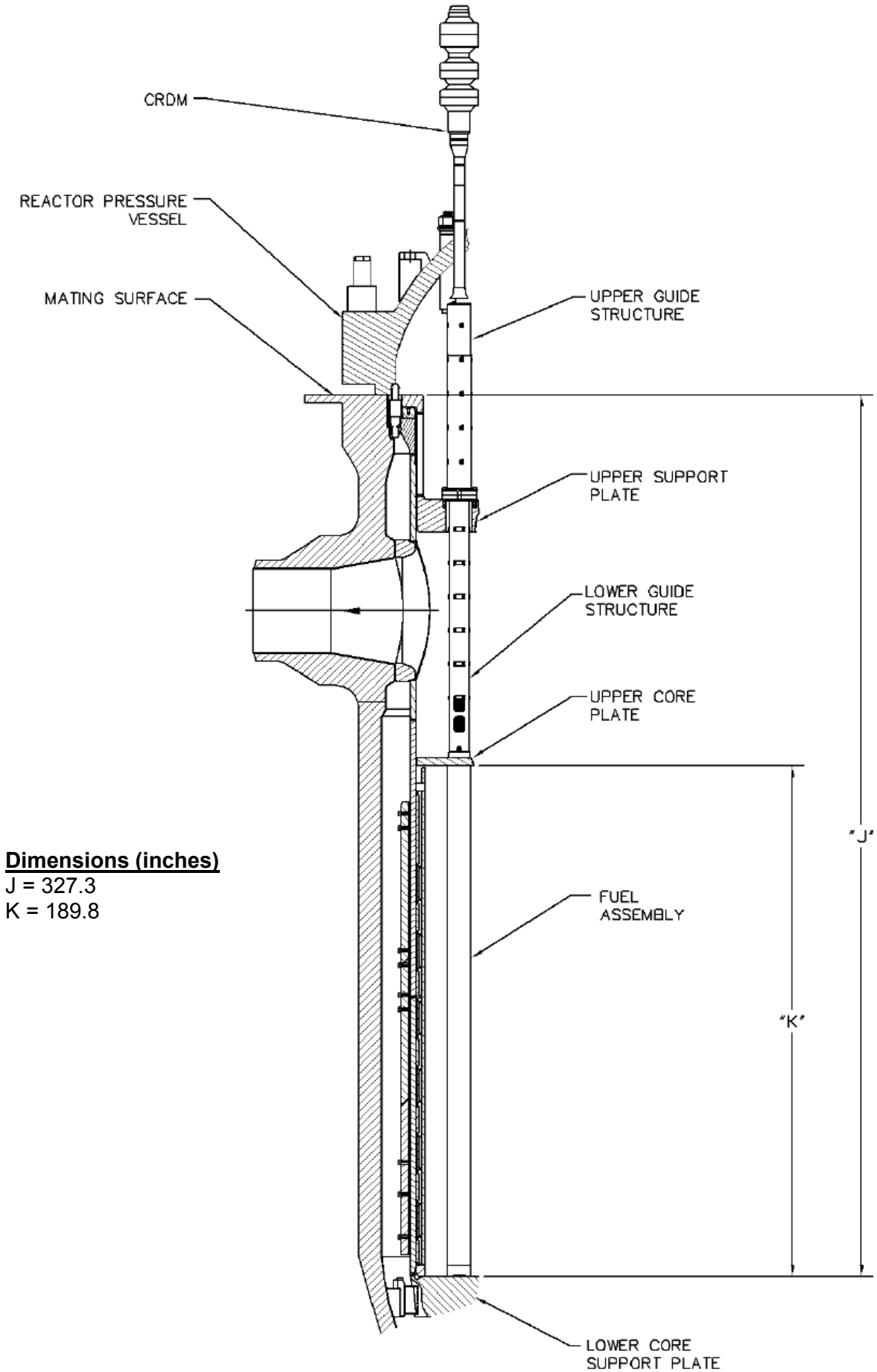

Dimensions (inches)
J = 327.3
K = 189.8

Figure 2-11 Rod Cluster Control and Drive Rod Arrangement

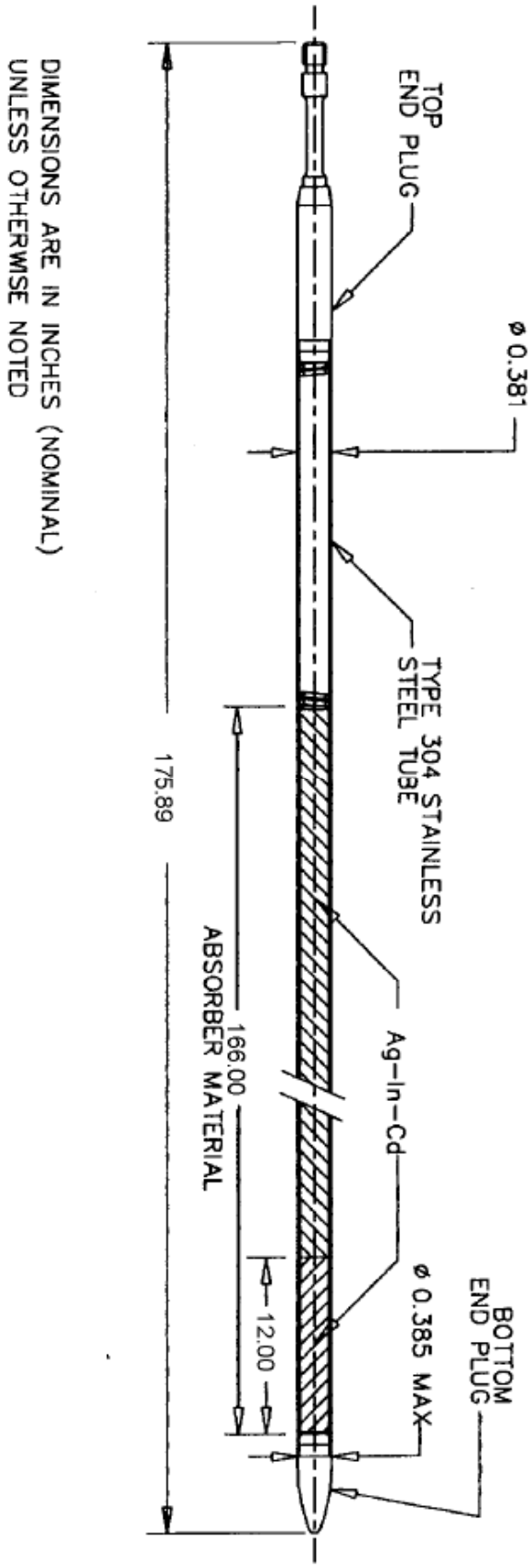

Figure 2-12 Absorber Rod from Rod Cluster Control Assembly

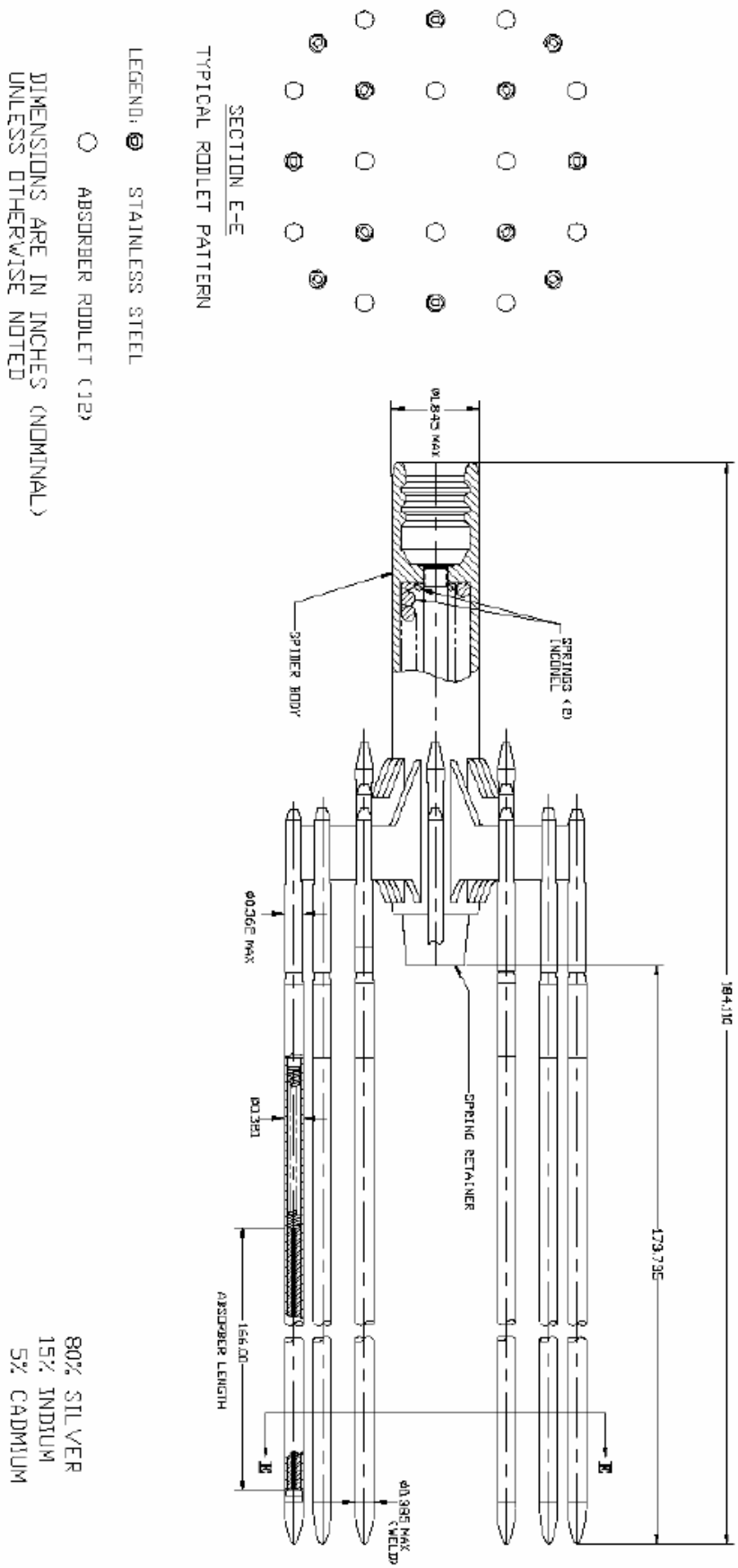

Figure 2-13 Gray Rod Assembly Construction

	R	P	N	M	L	K	J	H	G	F	E	D	C	B	A	
								180								
1																
2						SD4		MB		SD4						
3					M2		SD2		SD2		M2					
4				MC		AO		M1		AO		MC				
5			M2		SD1		SD3		SD3		SD1		M2			
6		SD4		AO		MA		MD		MA		AO		SD4		
7			SD2		SD3		SD1		SD1		SD3		SD2			
8	90	MB		M1		MD		AO		MD		M1		MB		270
9			SD2		SD3		SD1		SD1		SD3		SD2			
10		SD4		AO		MA		MD		MA		AO		SD4		
11			M2		SD1		SD3		SD3		SD1		M2			
12				MC		AO		M1		AO		MC				
13					M2		SD2		SD2		M2					
14						SD4		MB		SD4						
15																
								0								

Bank		Number of Clusters
MA	(MSHIM Gray Bank A)	4
MB	(MSHIM Gray Bank B)	4
MC	(MSHIM Gray Bank C)	4
MD	(MSHIM Gray Bank D)	4
M1	(MSHIM Black Bank 1)	4
M2	(MSHIM Black Bank 2)	8
AO	(A.O. Control Bank)	9
SD1	(Shutdown Bank 1)	8
SD2	(Shutdown Bank 2)	8
SD3	(Shutdown Bank 3)	8
SD4	(Shutdown Bank 4)	8
TOTAL		69

Gray Rod Position

Figure 2-14 Control Rod Locations

						3	3	3						
				3	3	3	1	3	3	3				
			3	3	2	1	2	1	2	3	3			
		3	1	2	1	2	1	2	1	2	1	3		
	3	3	2	1	2	1	2	1	2	1	2	3	3	
	3	2	1	2	1	2	1	2	1	2	1	2	3	
3	3	1	2	1	2	1	2	1	2	1	2	1	3	3
3	1	2	1	2	1	2	1	2	1	2	1	2	1	3
3	3	1	2	1	2	1	2	1	2	1	2	1	3	3
	3	2	1	2	1	2	1	2	1	2	1	2	3	
	3	3	2	1	2	1	2	1	2	1	2	3	3	
		3	1	2	1	2	1	2	1	2	1	3		
			3	3	2	1	2	1	2	3	3			
				3	3	3	1	3	3	3				
						3	3	3						

1 = Region 1
2 = Region 2
3 = Region 3

Figure 2-15 Reactor Core Regions for First Fuel Load