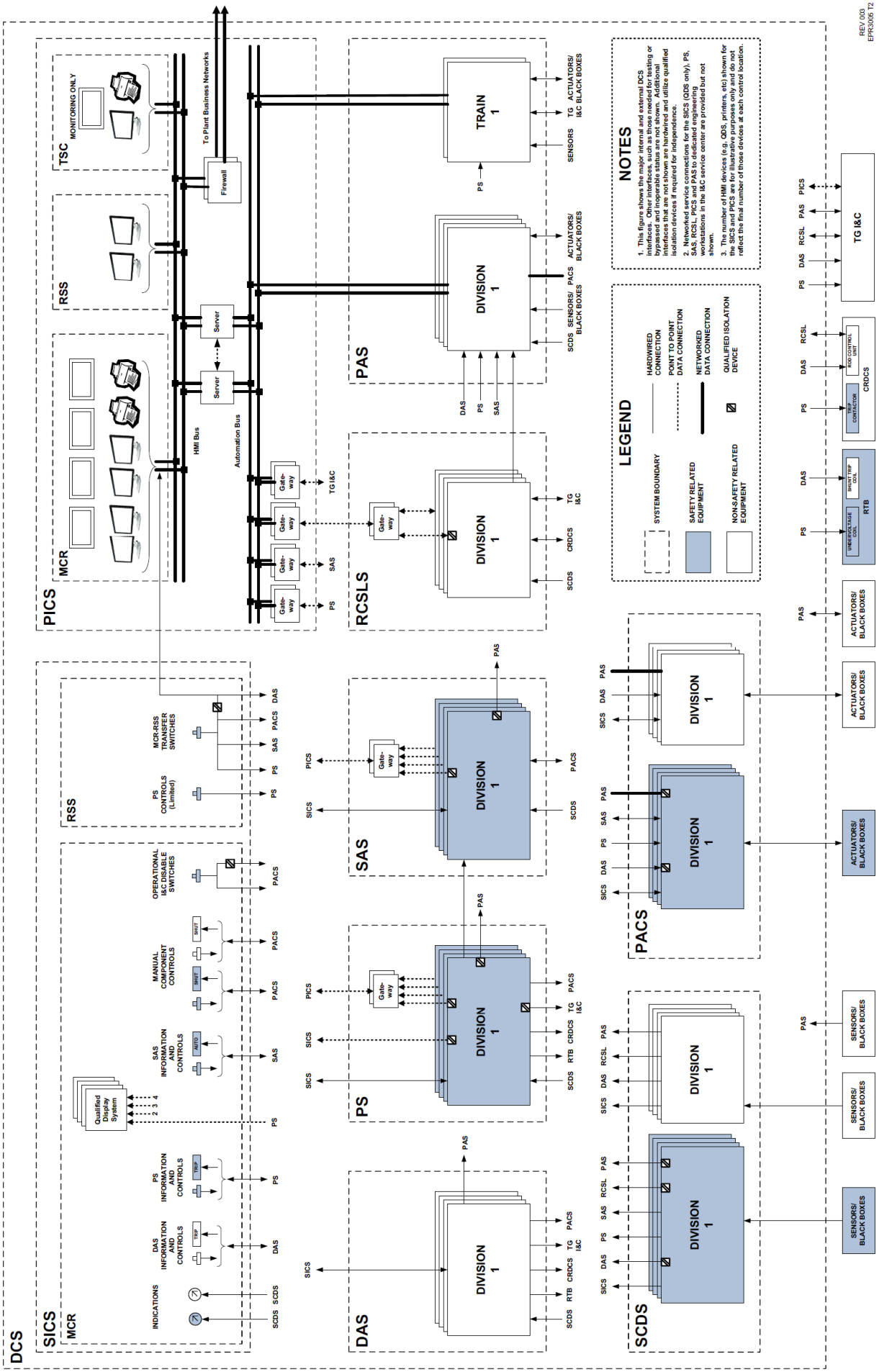

Figure 8-1
Instrumentation and Control Architecture

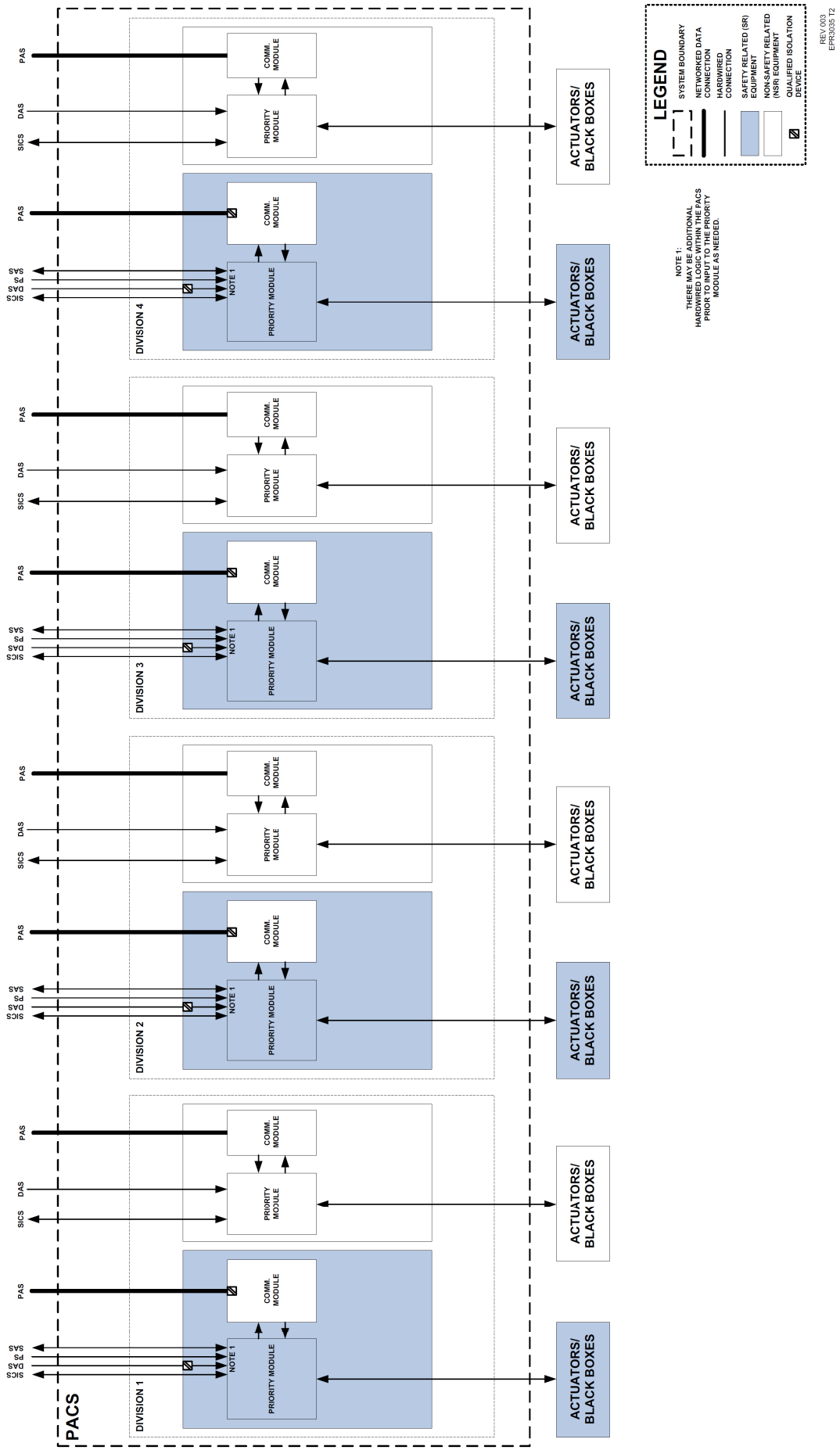

Figure 8-2
Priority and Actuator Control System Architecture

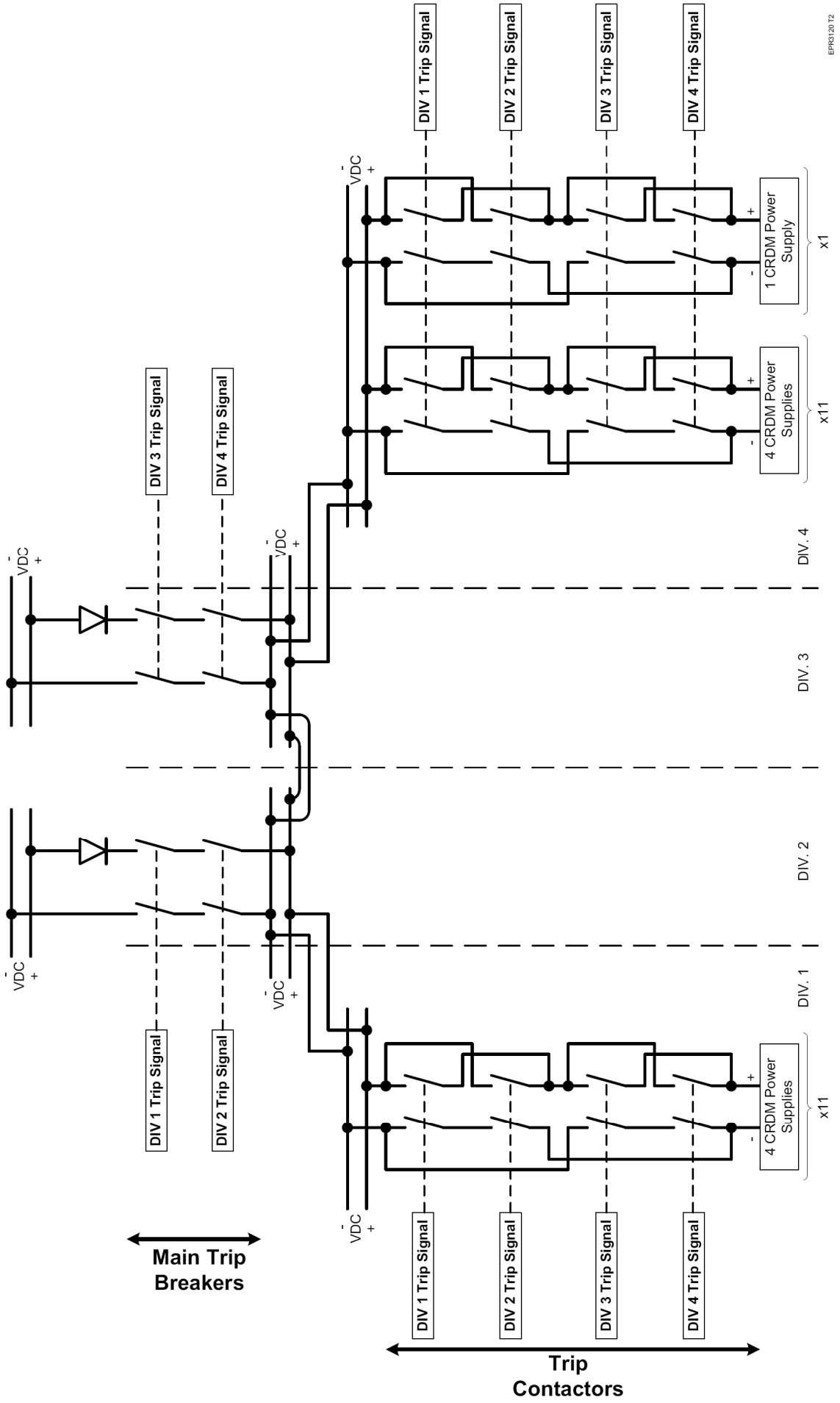

Figure 8-3
Safety-Related Reactor Trip Devices

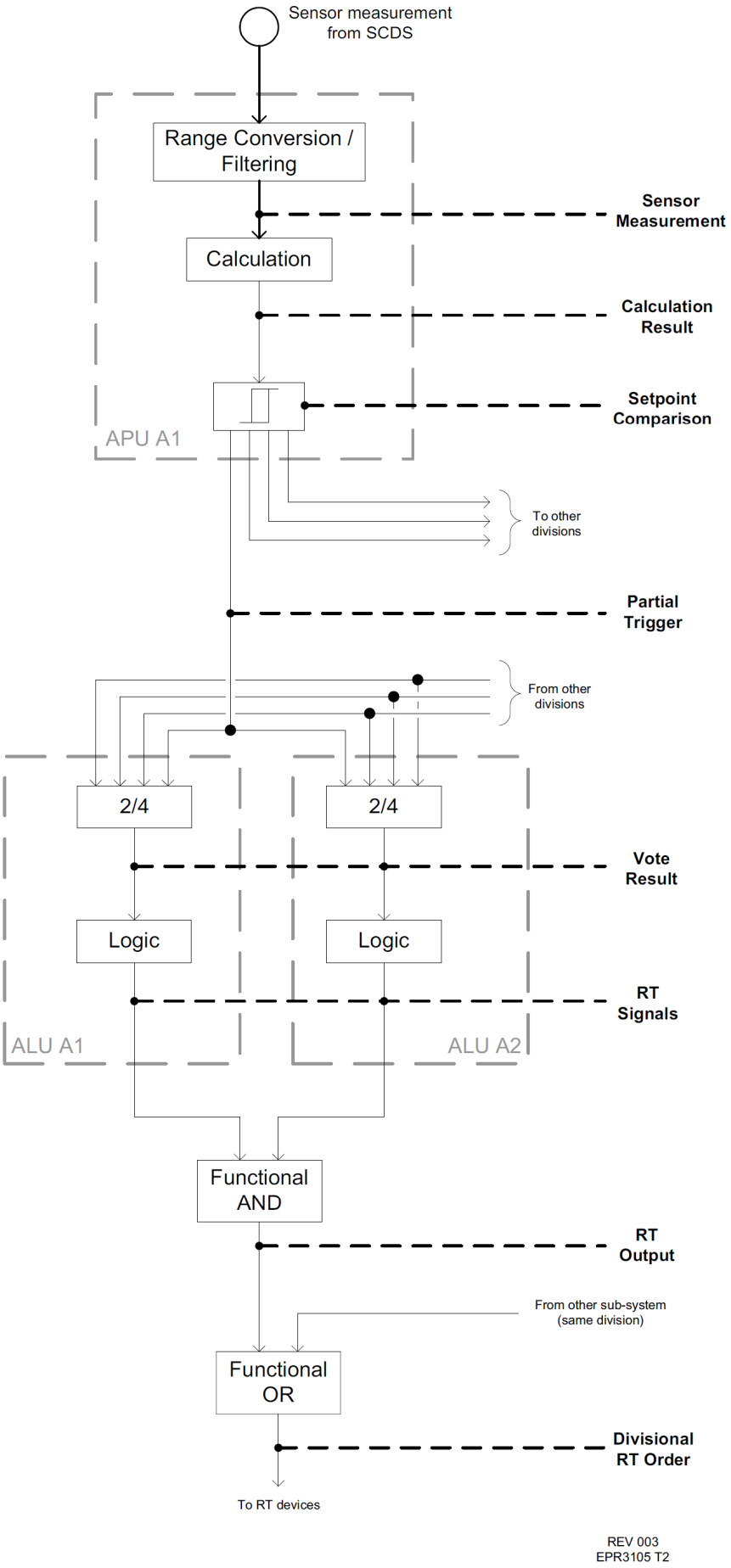

Figure 8-4
Typical Reactor Trip Actuation

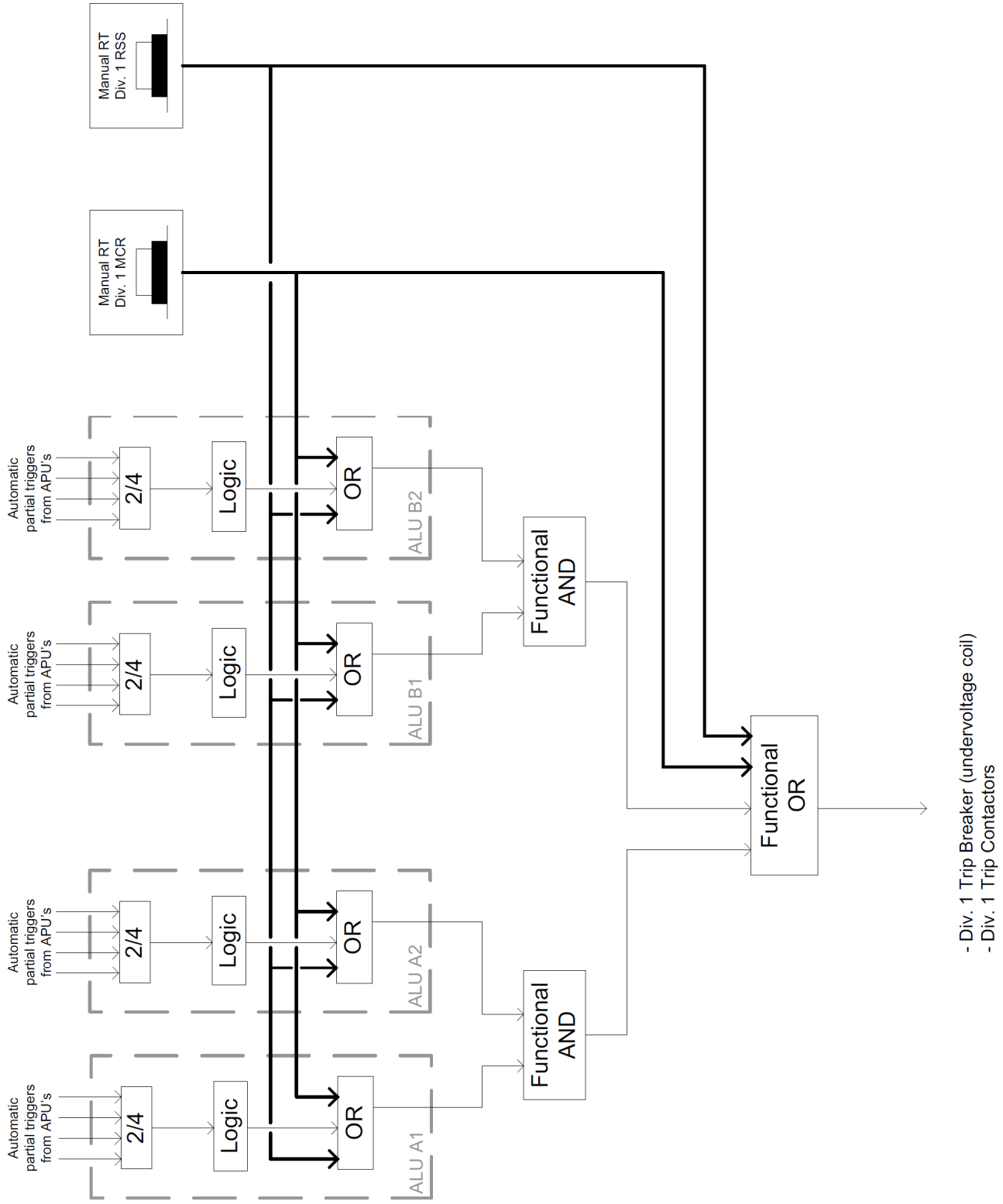

Figure 8-5
Manual Reactor Trip

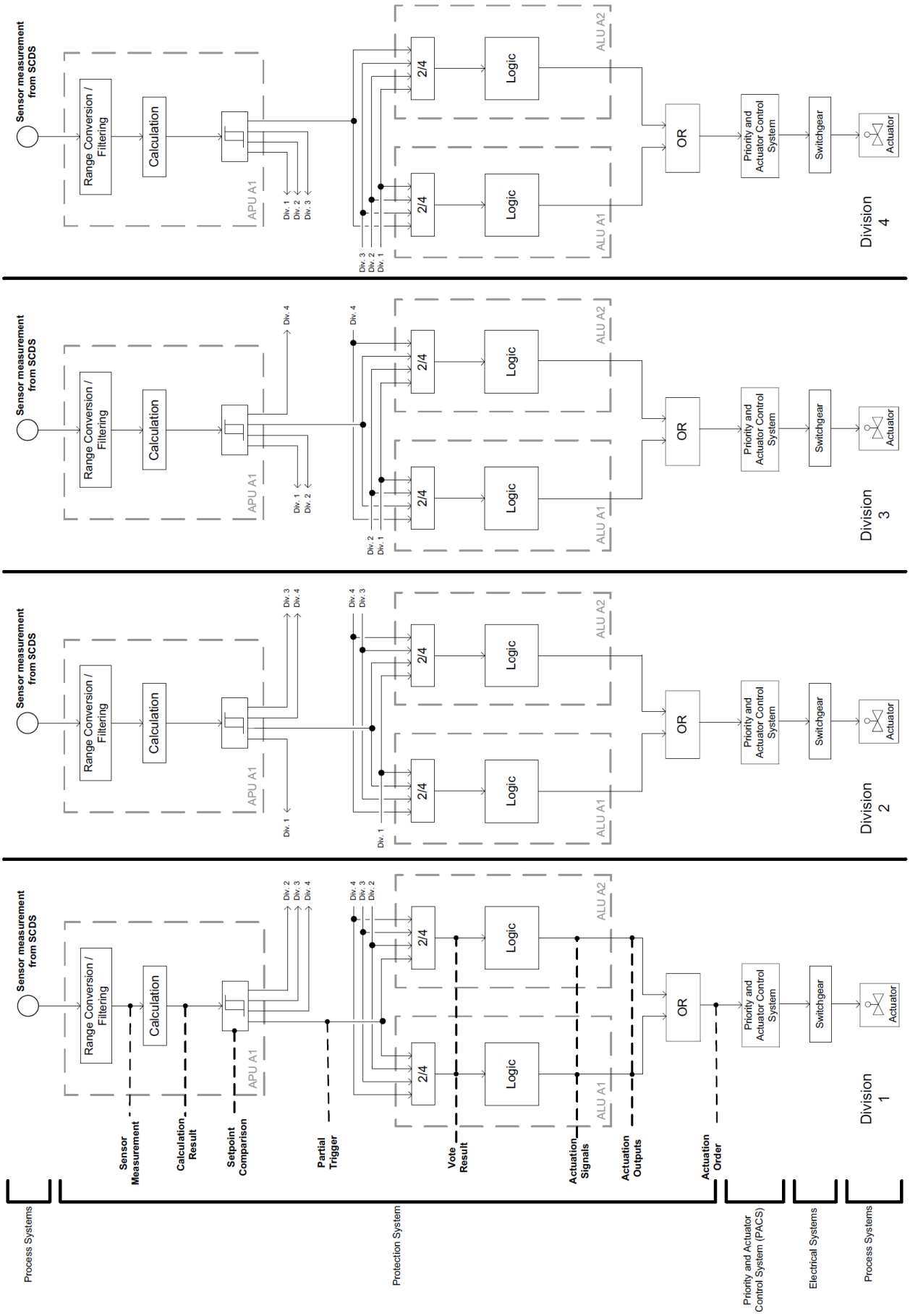

Figure 8-6
Typical Engineered Safety Features Actuation

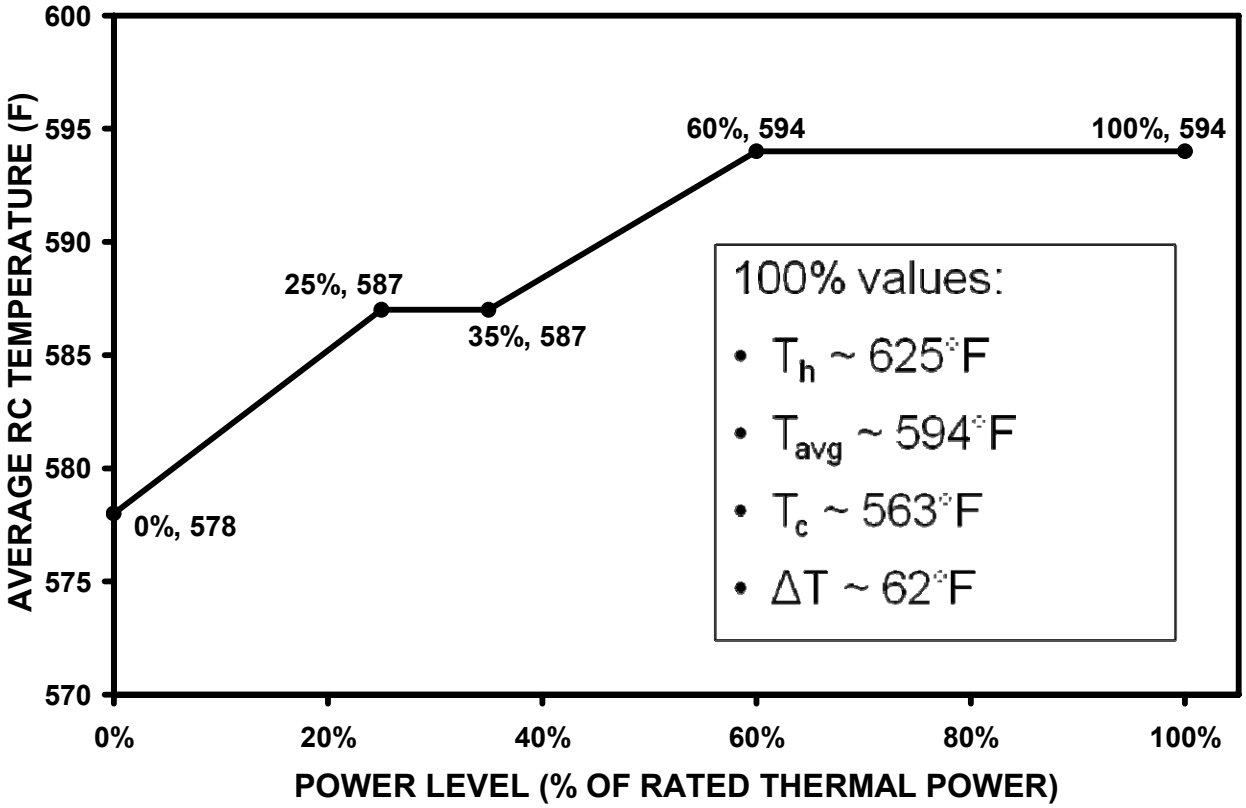

Figure 8-7
Reactor Coolant Average Temperature Program

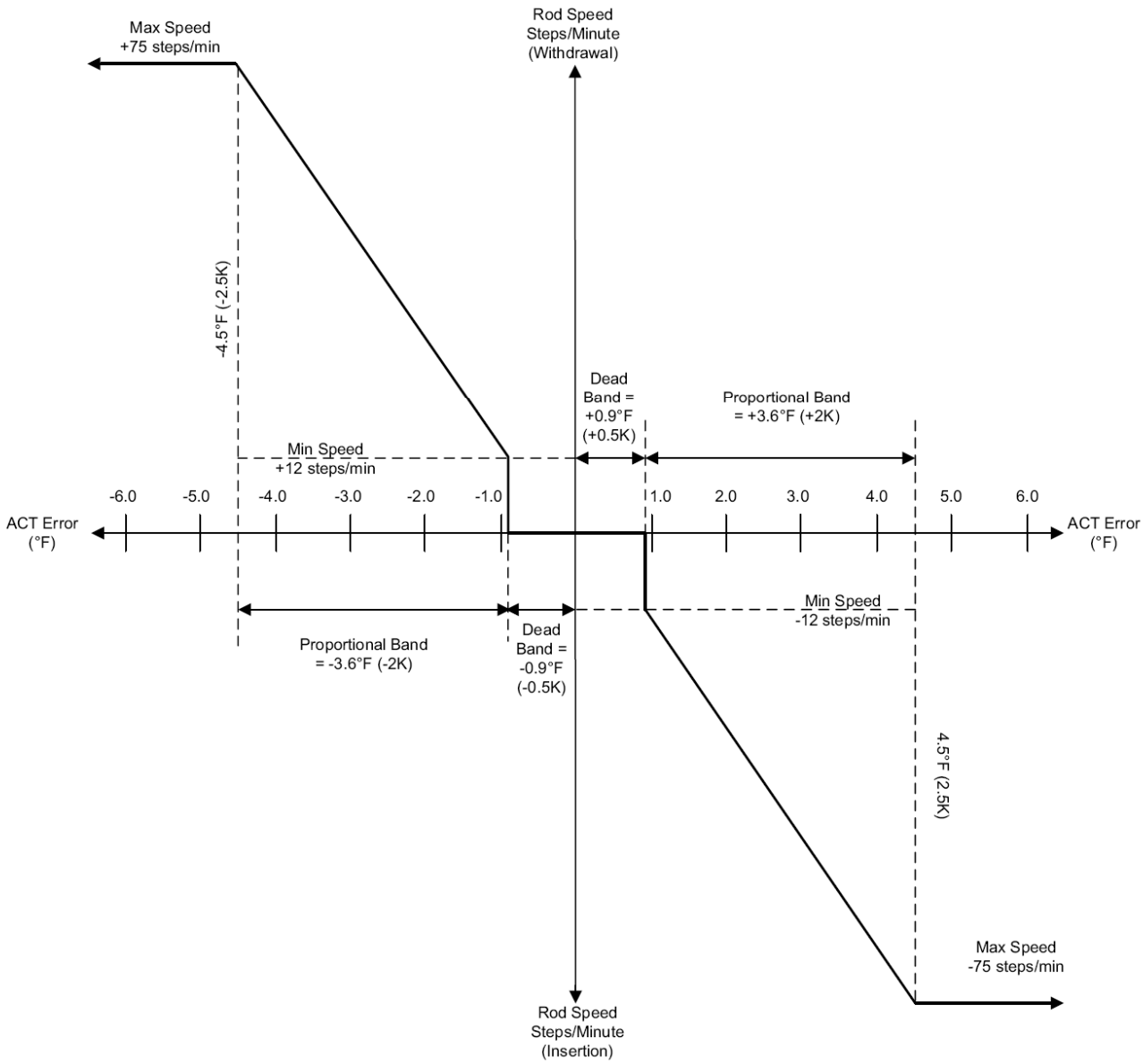

Figure 8-8
Rod Speed Control Diagram

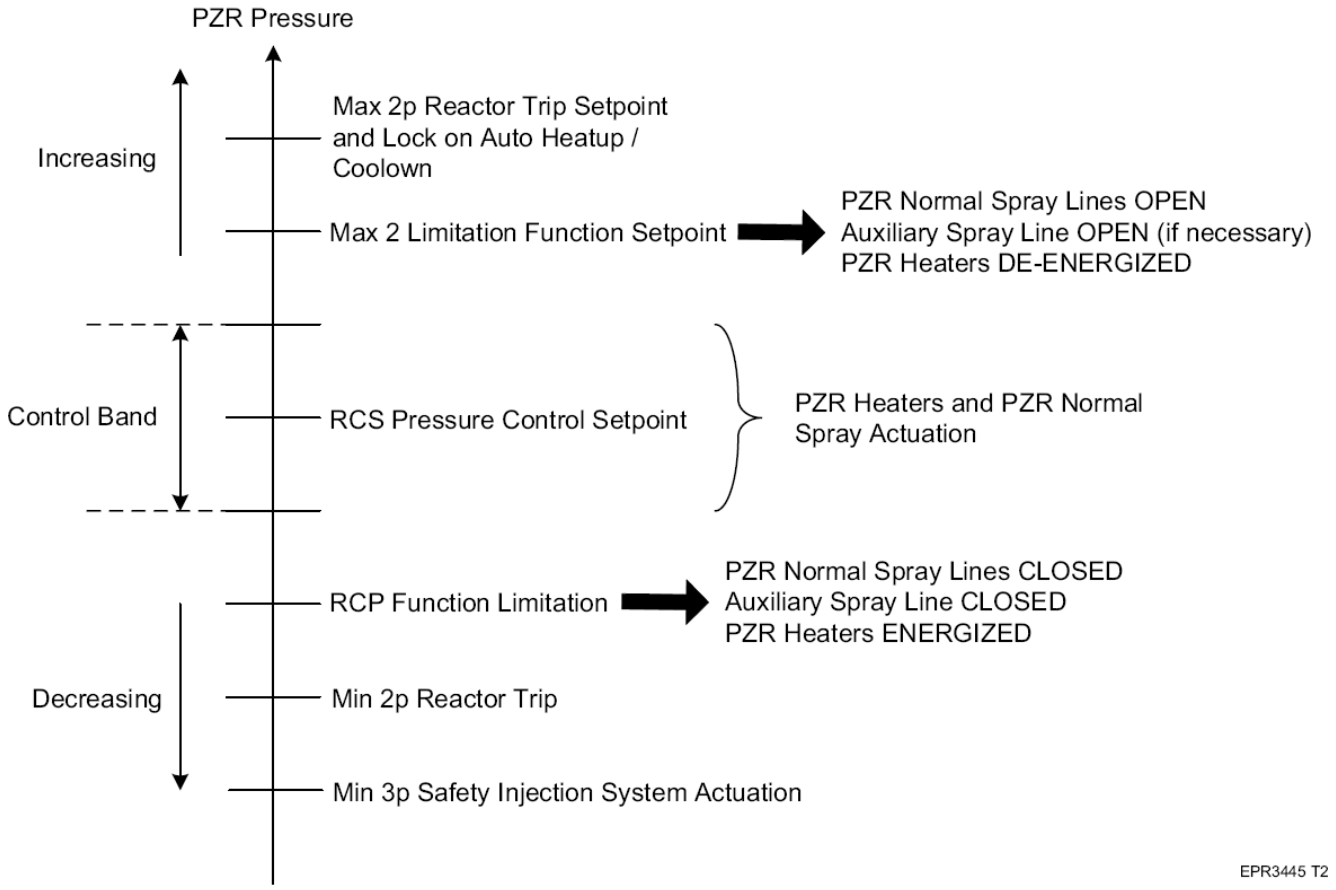

Figure 8-9
RCS Pressure Setpoints

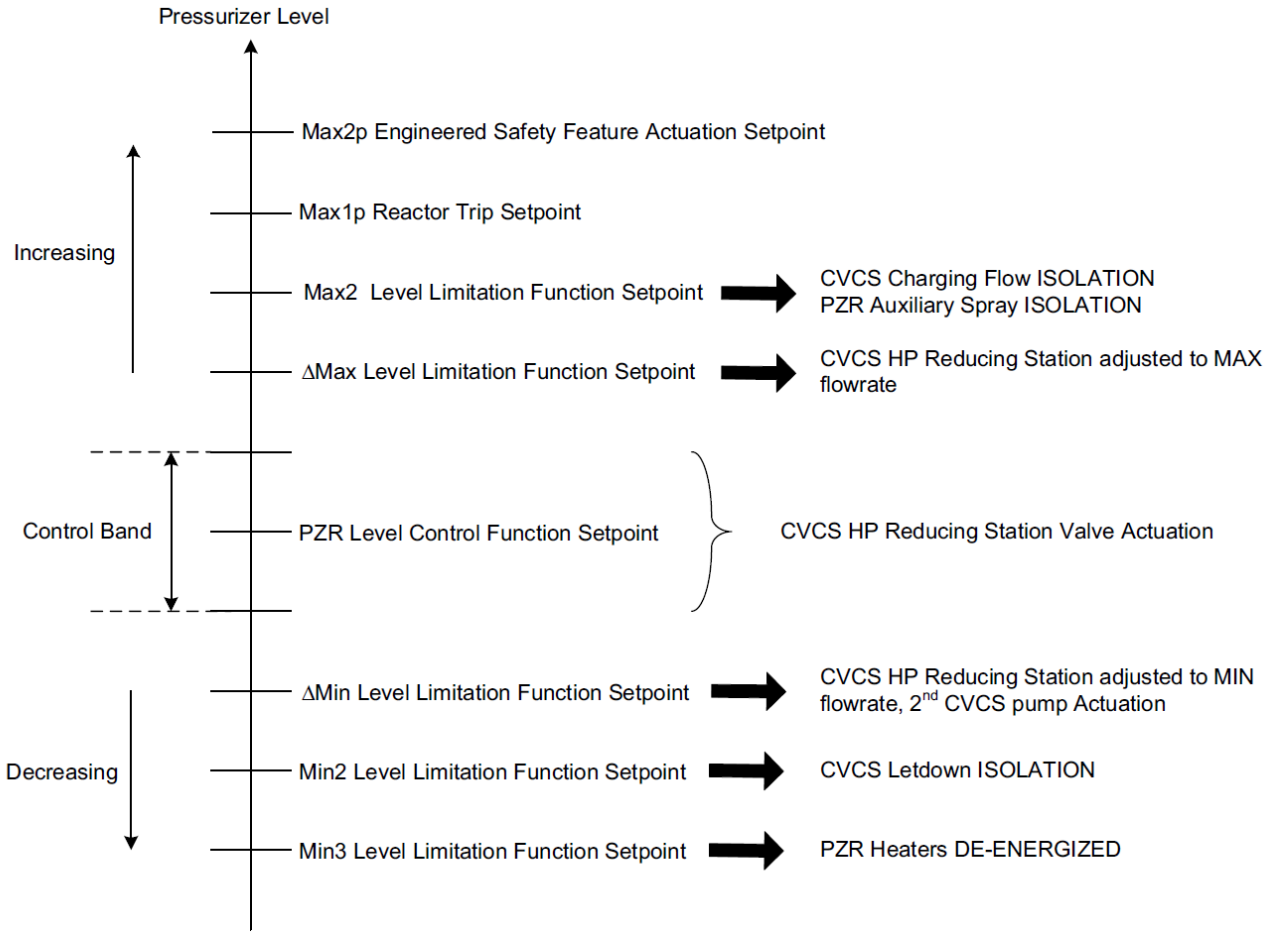

Figure 8-10
Pressurizer Level Setpoints

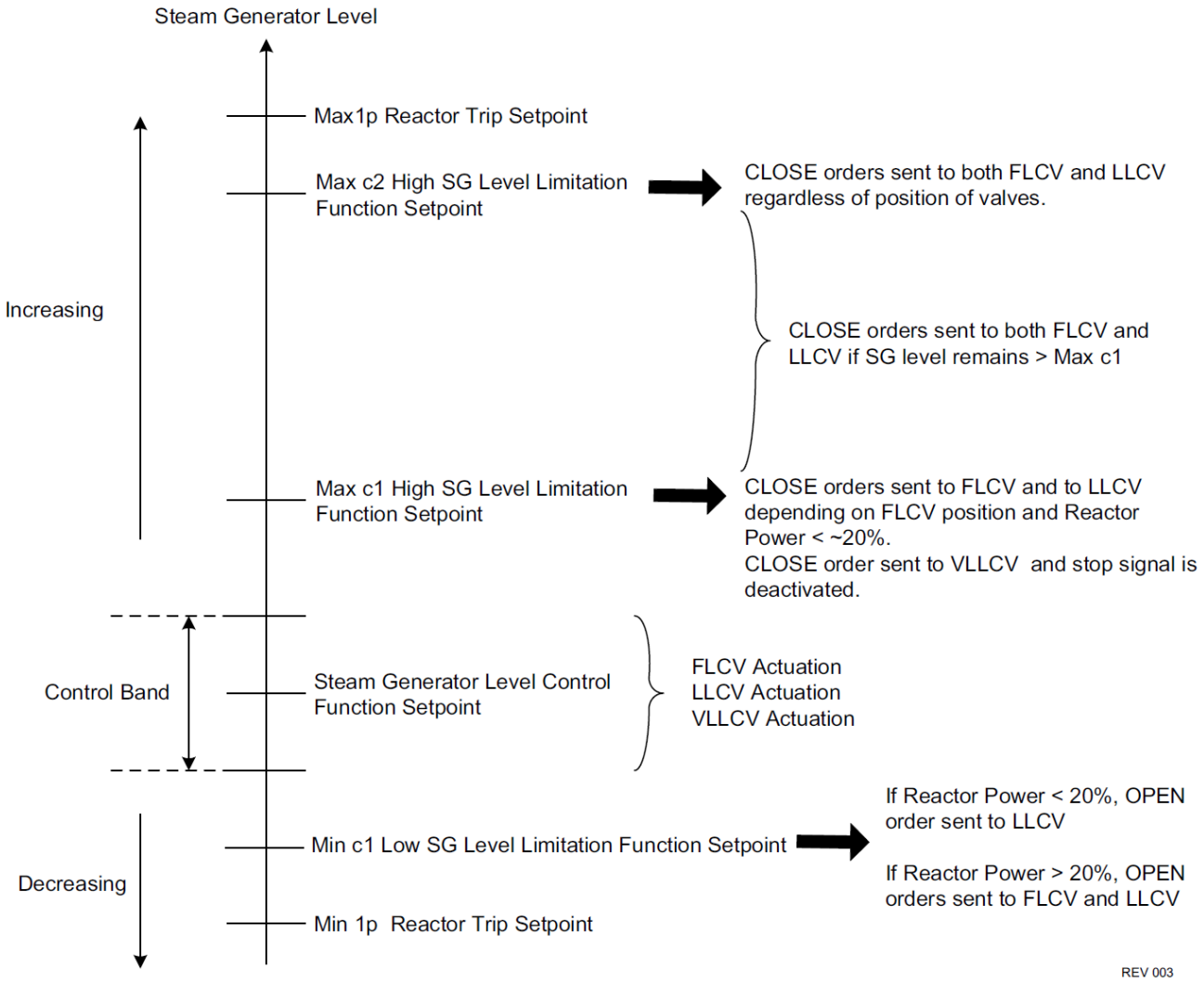

Figure 8-11
Steam Generator Level Setpoints