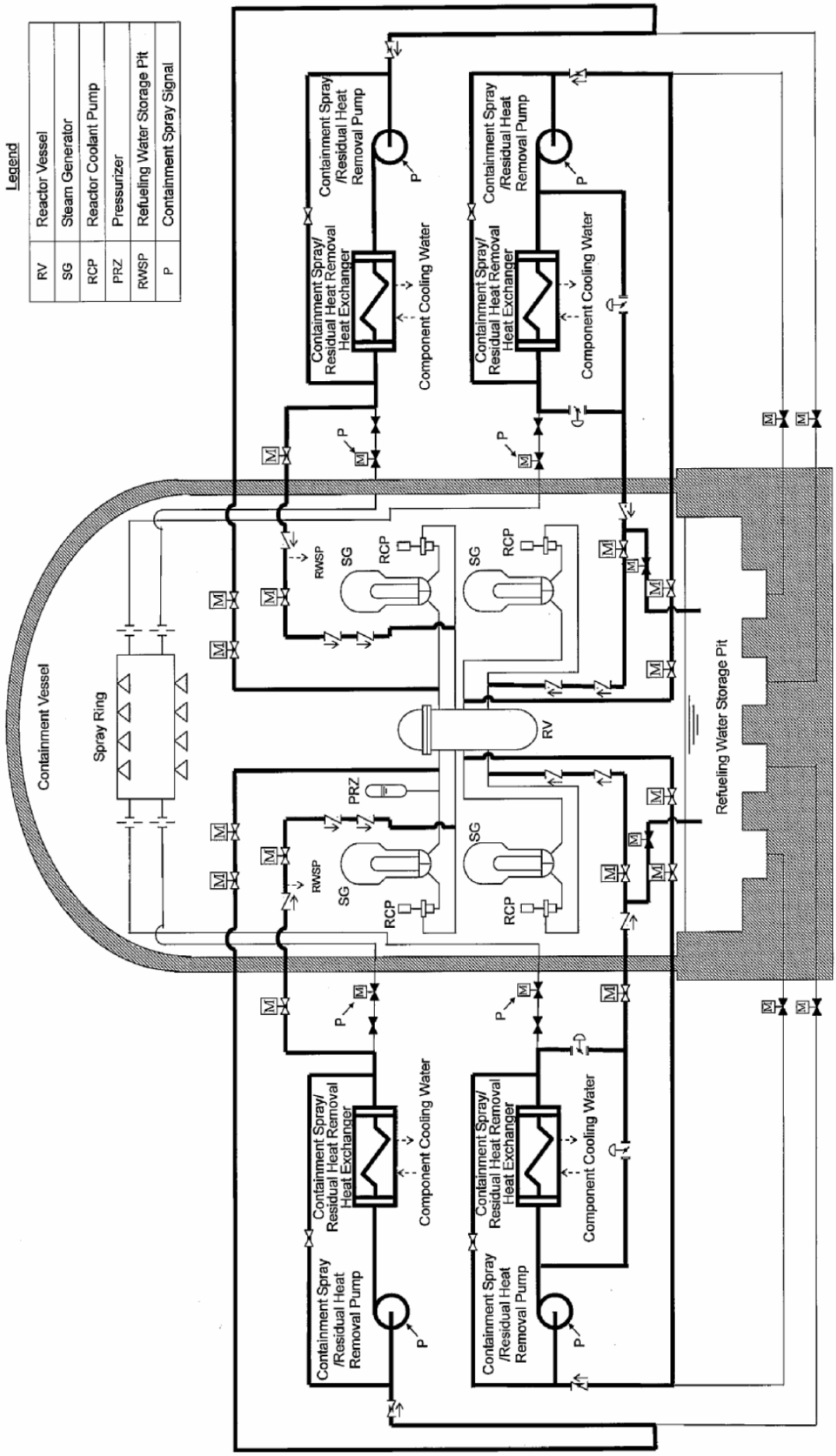

Figure 6-1 Residual Heat Removal System Flow Diagram

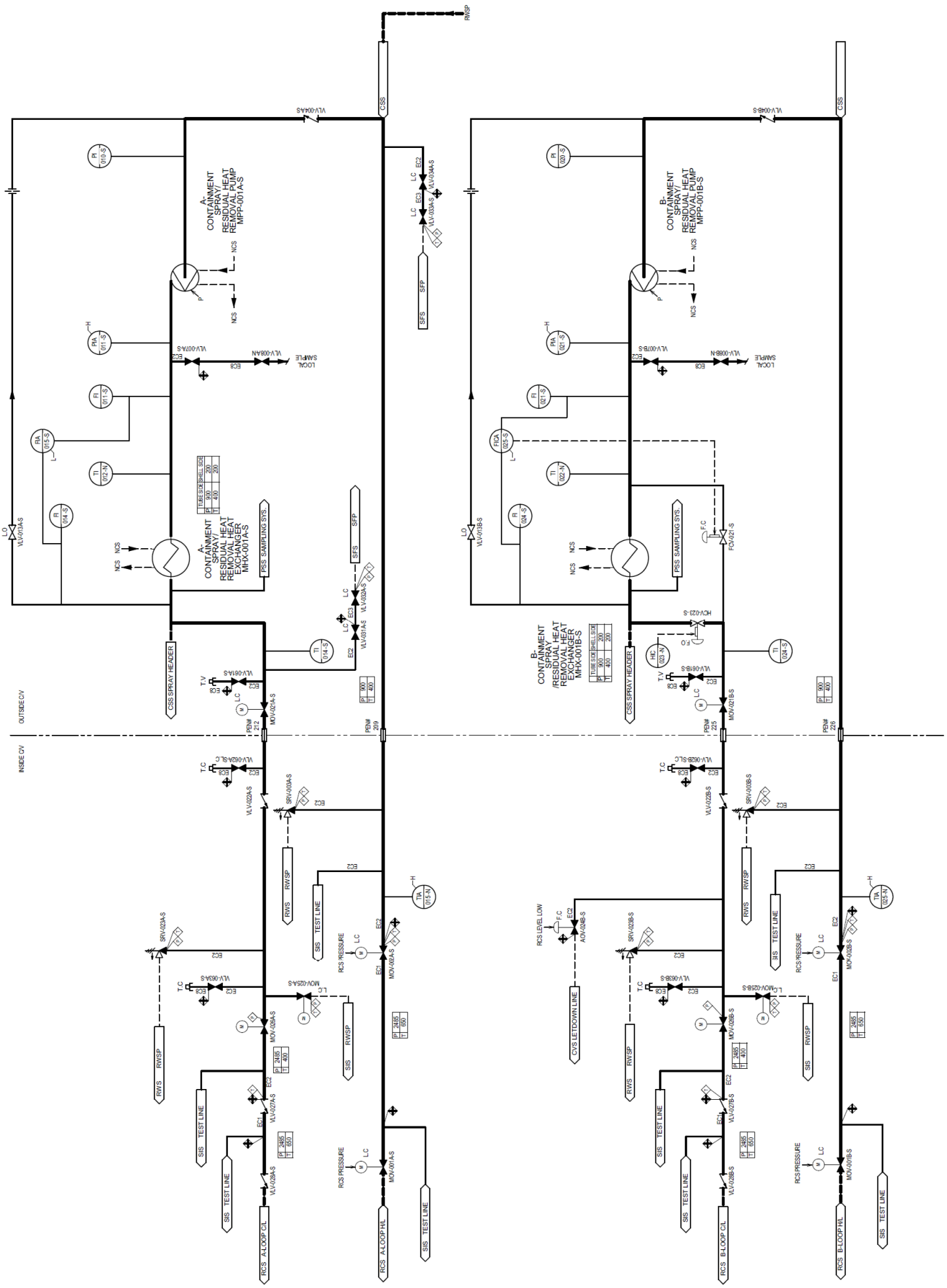

Figure 6-2 Residual Heat Removal System P & ID (Sheet 1 of 2)

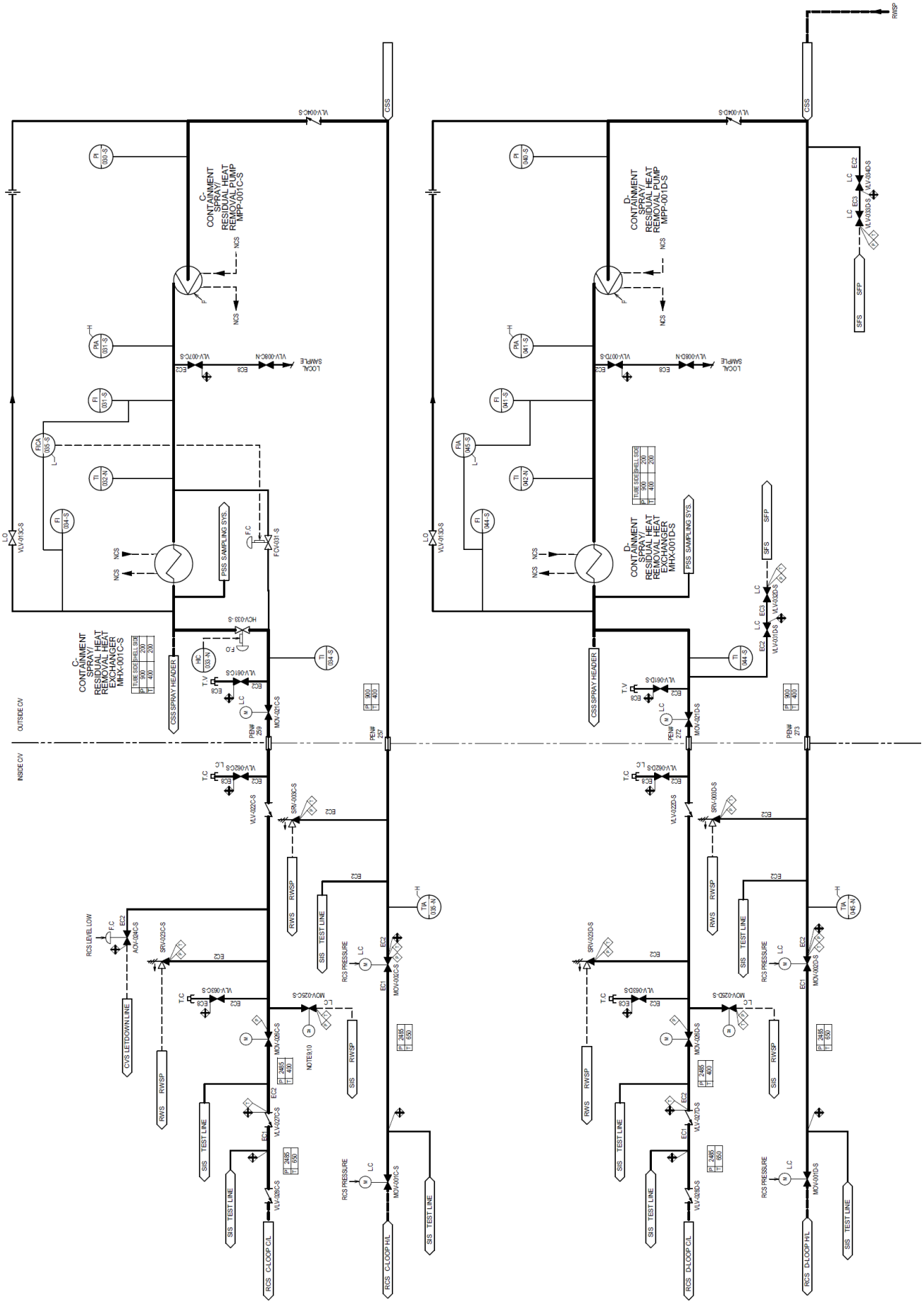

Figure 6-2 Residual Heat Removal System P & ID (Sheet 2 of 2)

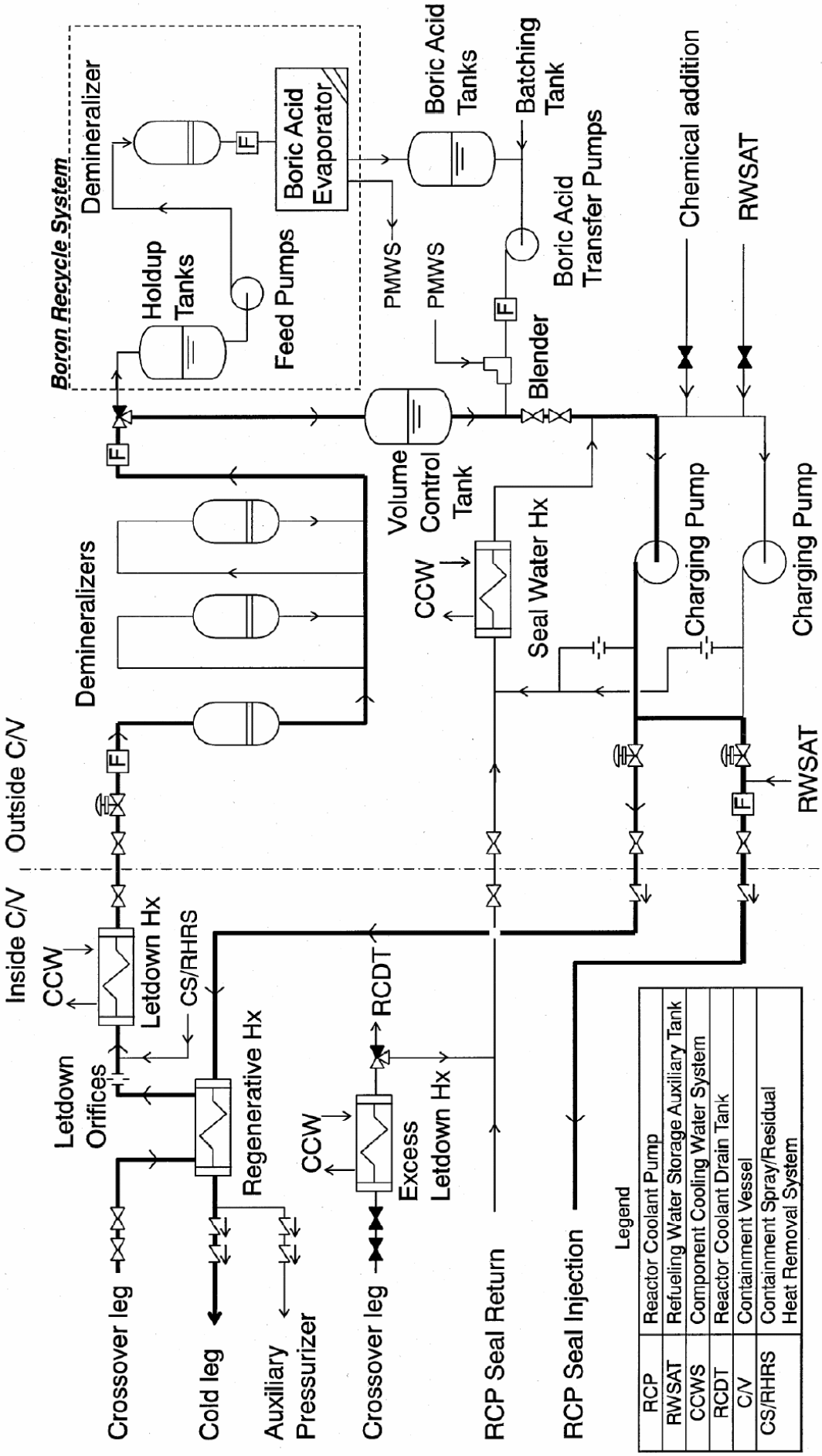

Figure 6-3 Chemical and Volume Control System

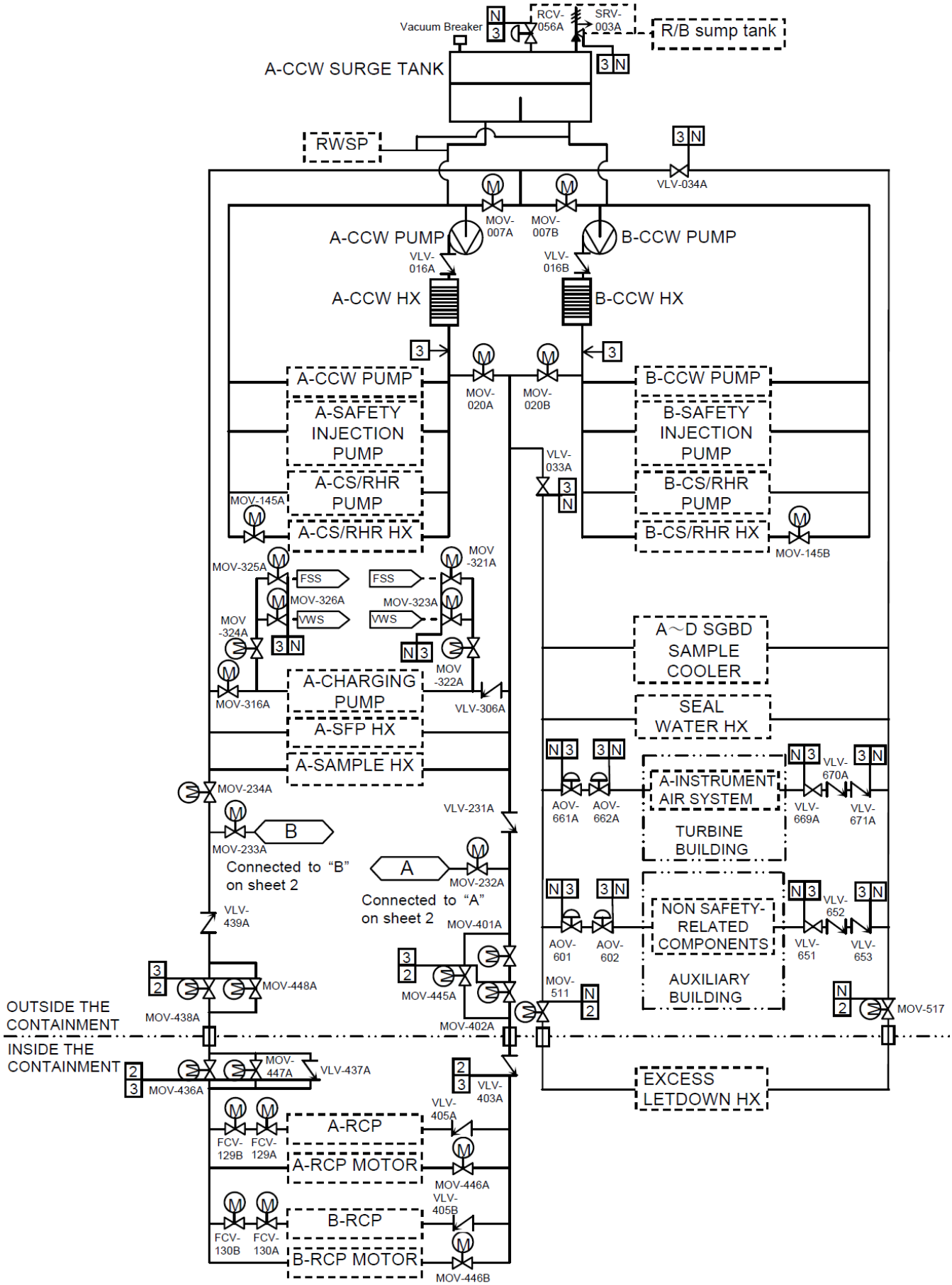

Figure 6-4 Component Cooling Water System (Sheet 1 of 2)

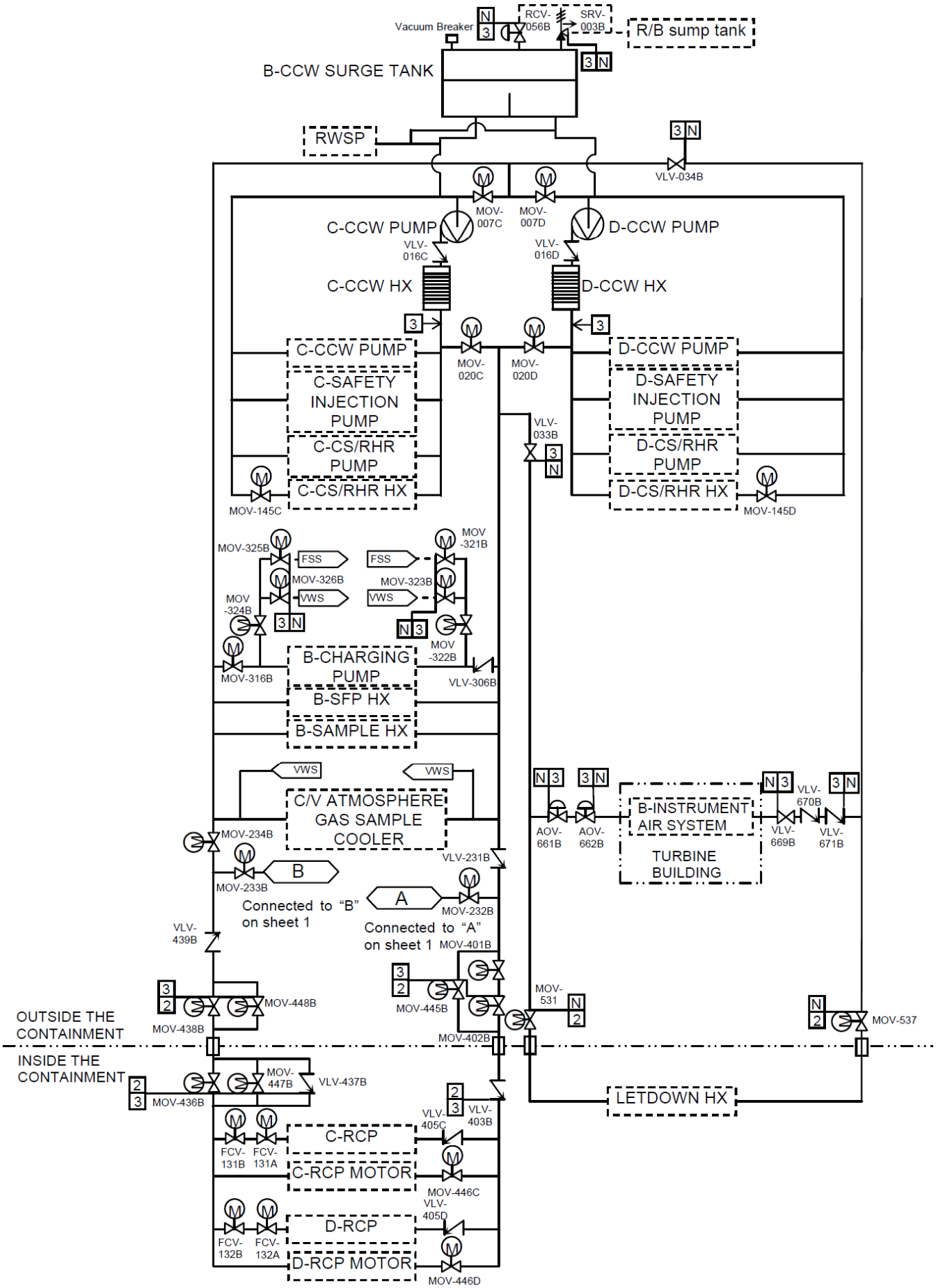

Figure 6-4 Component Cooling Water System (Sheet 2 of 2)

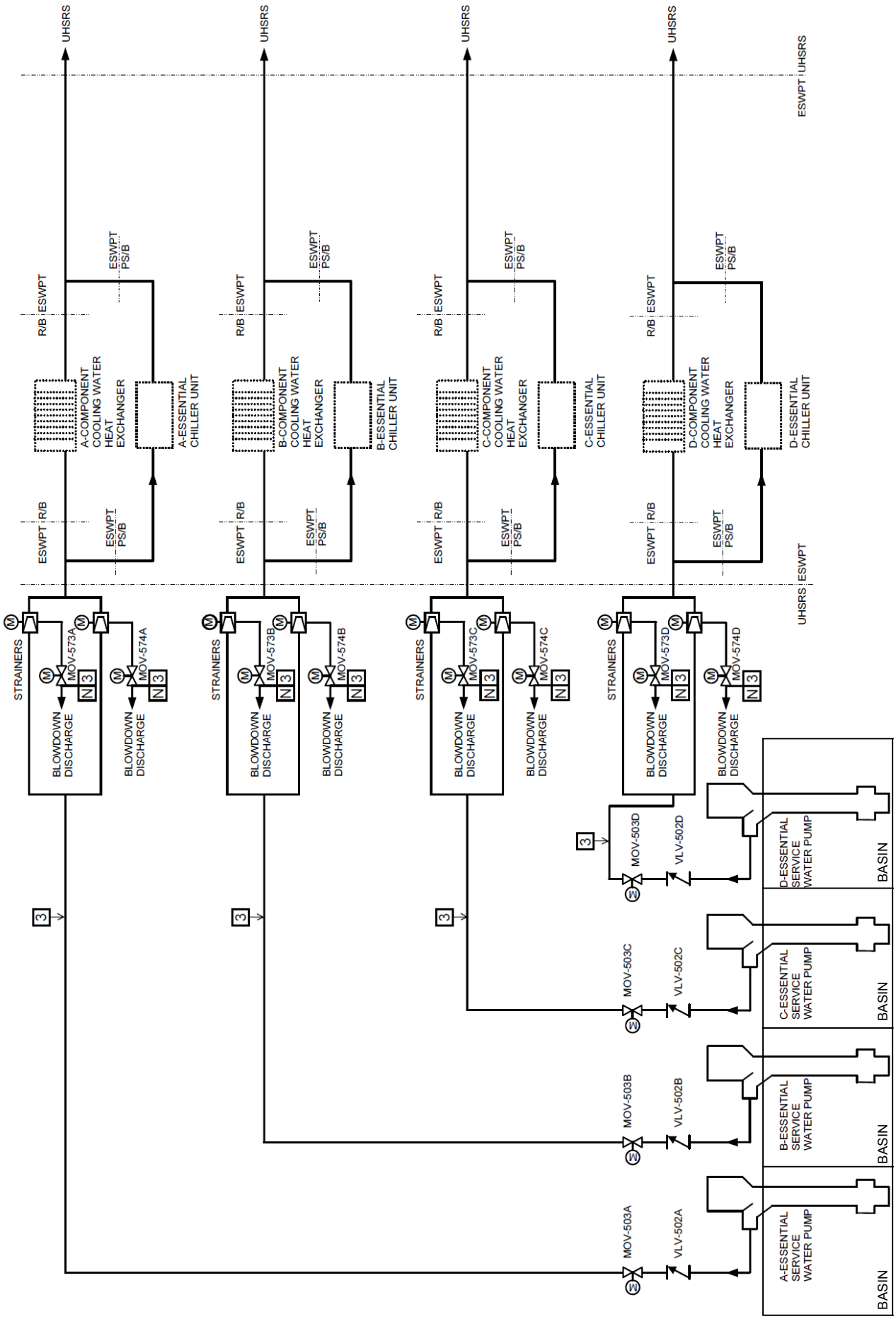

Figure 6-5 Essential Service Water System

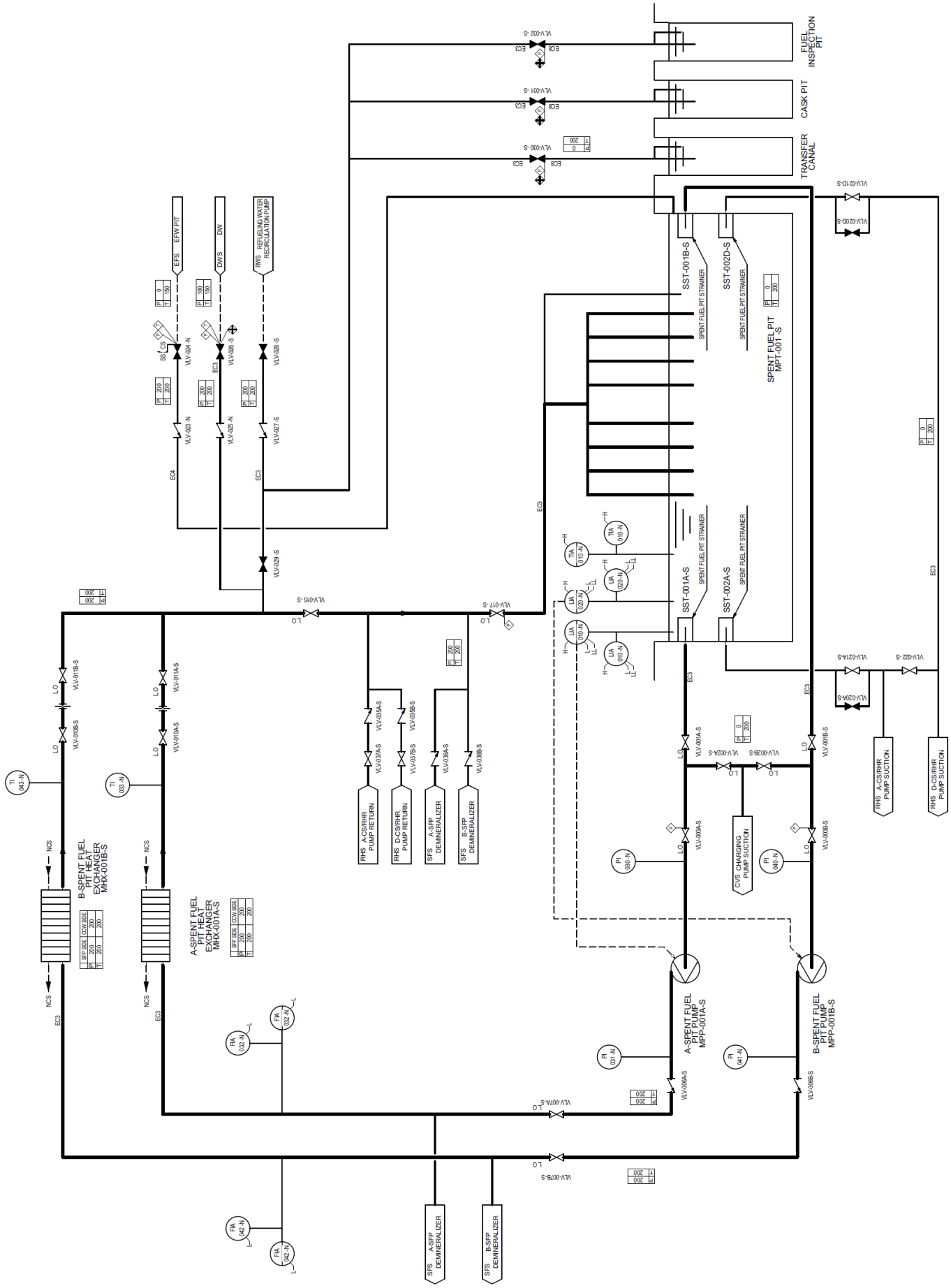

Figure 6-6 Spent Fuel Pit Cooling and Purification System (Sheet 1 of 2)

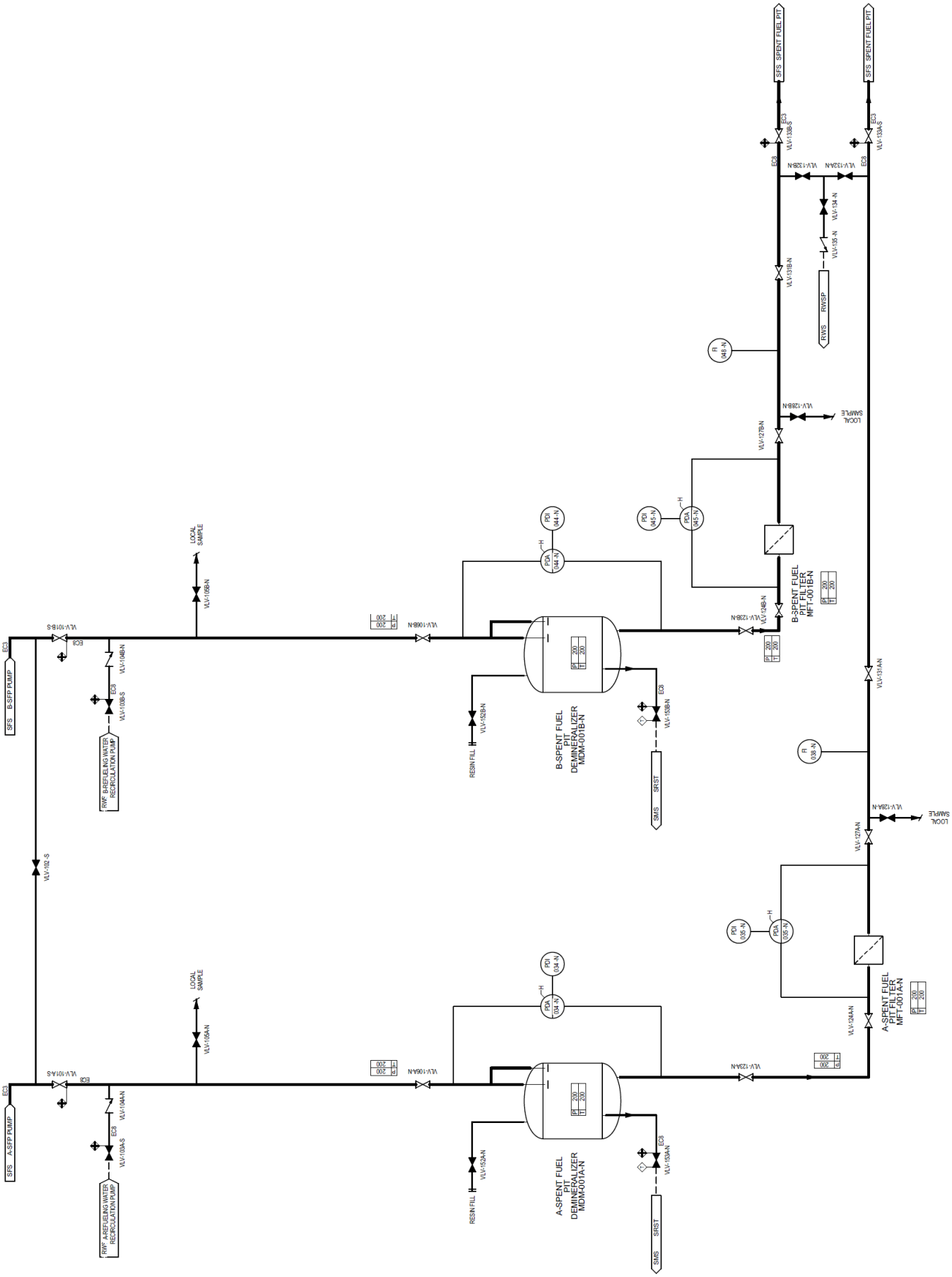

Figure 6-6 Spent Fuel Pit Cooling and Purification System (Sheet 2 of 2)