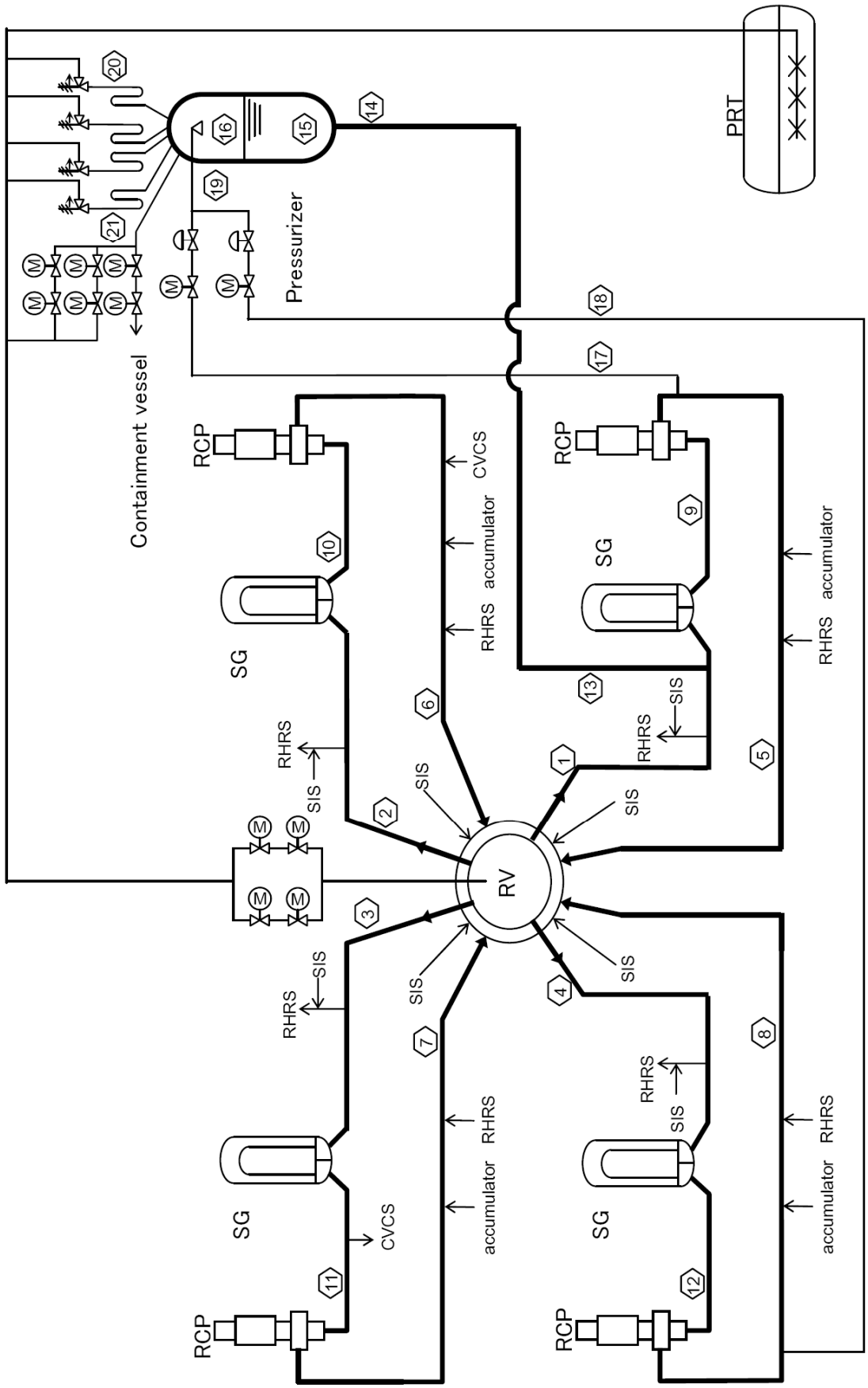

Figure 3-1 Reactor Coolant System

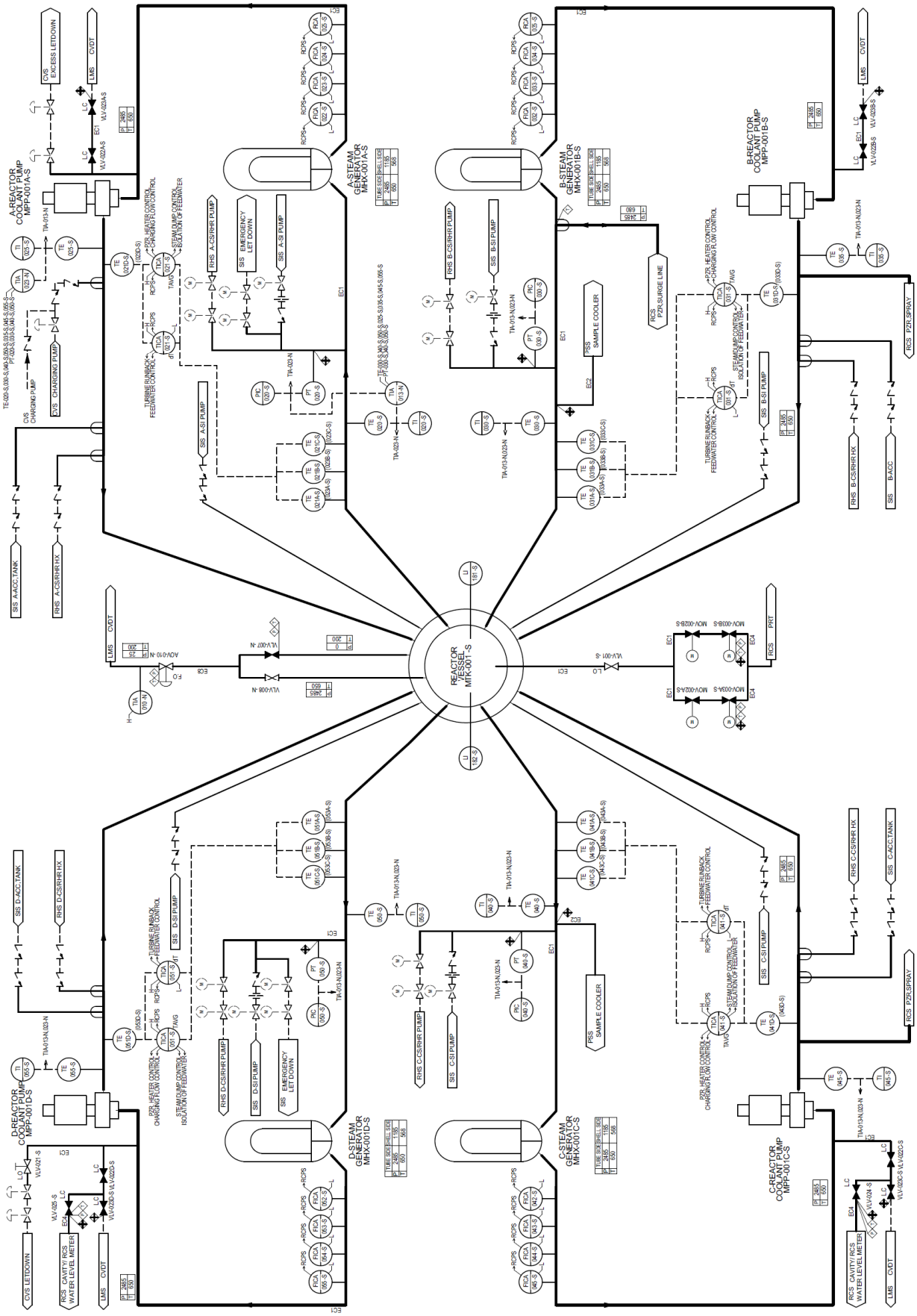

Figure 3-2 (Sheet 1) Reactor Coolant System Piping and Instrumentation Diagram

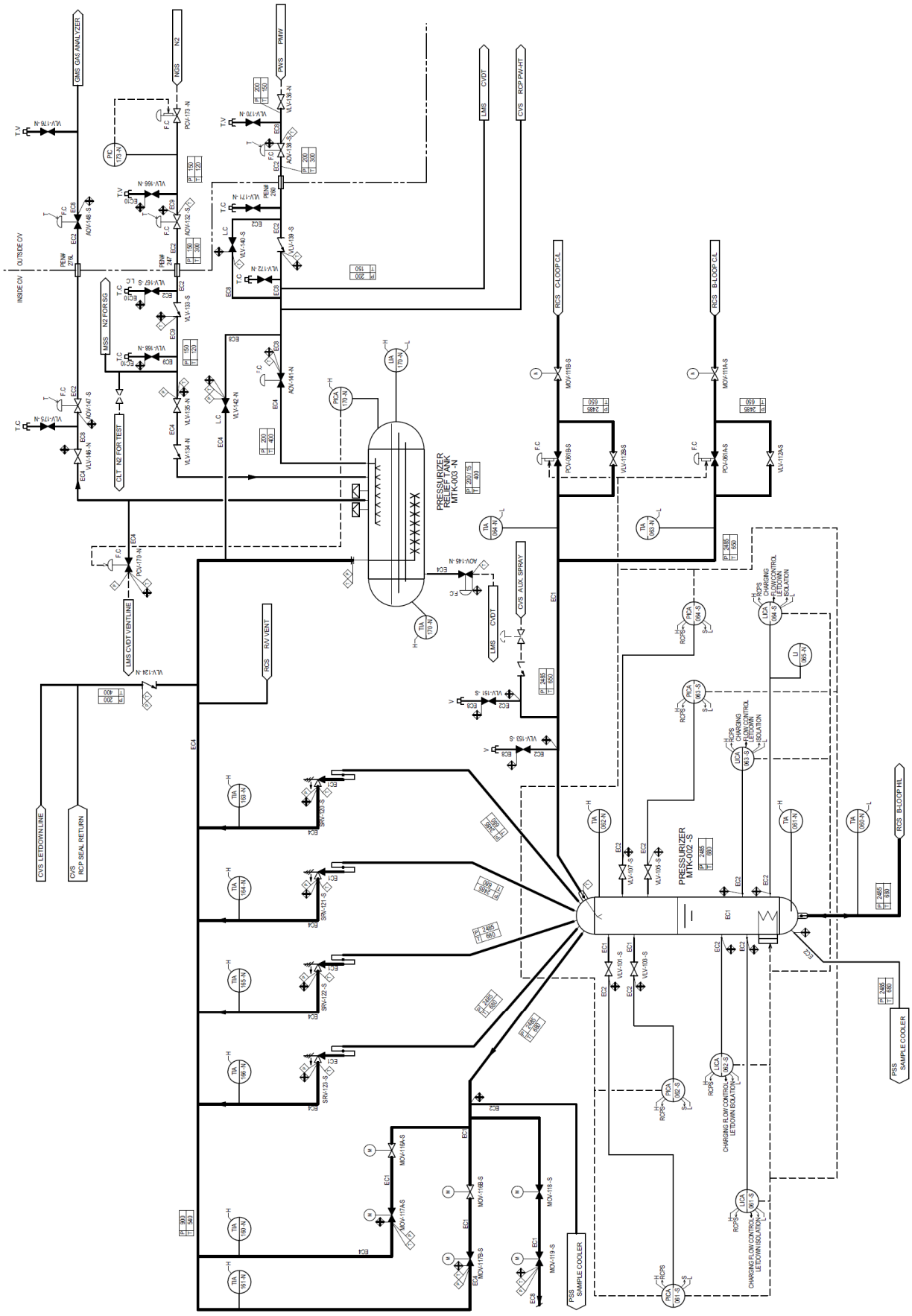

Figure 3-2 (Sheet 2) Reactor Coolant System Piping and Instrumentation Diagram

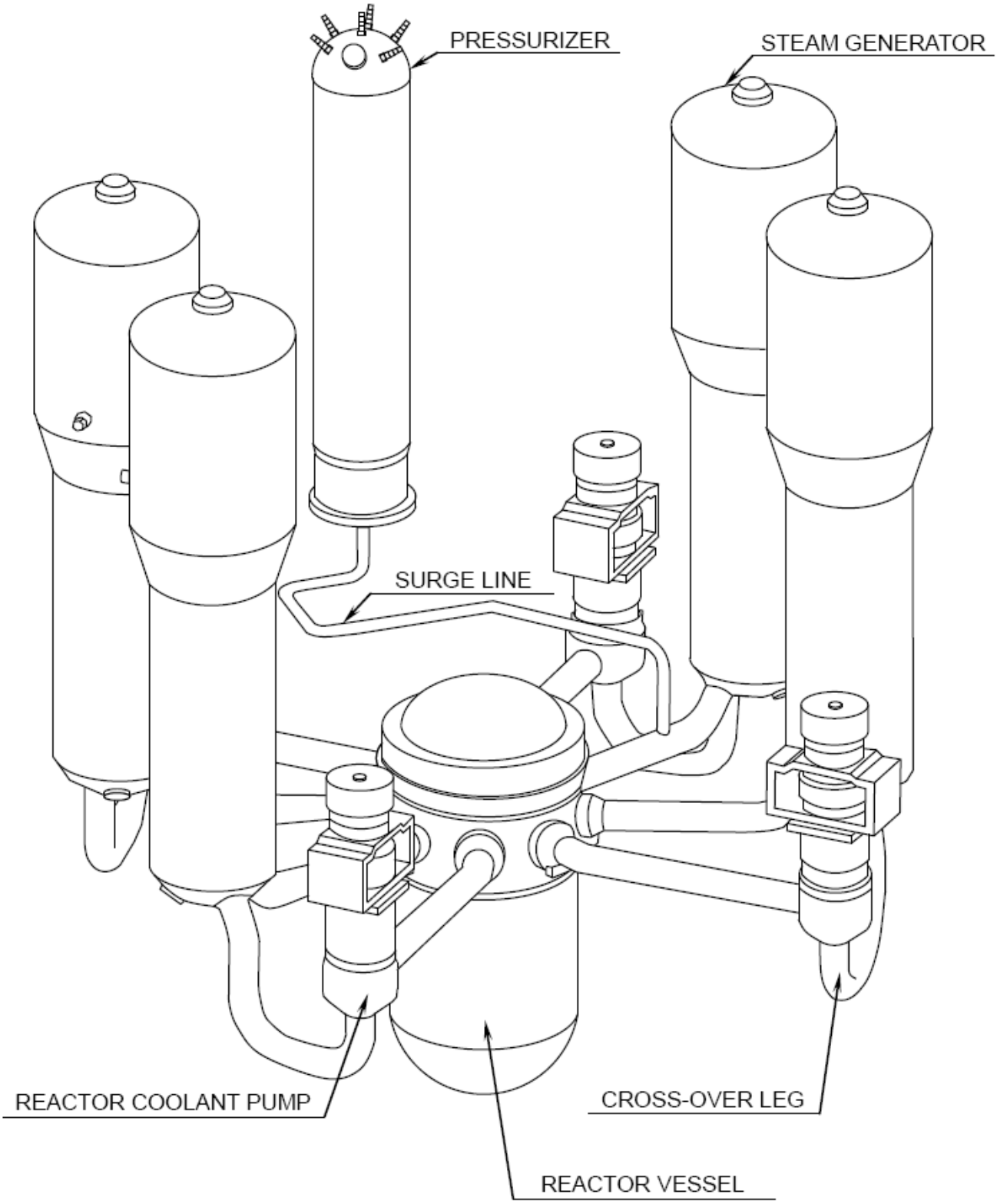

Figure 3-3 Reactor Coolant System – Isometric View

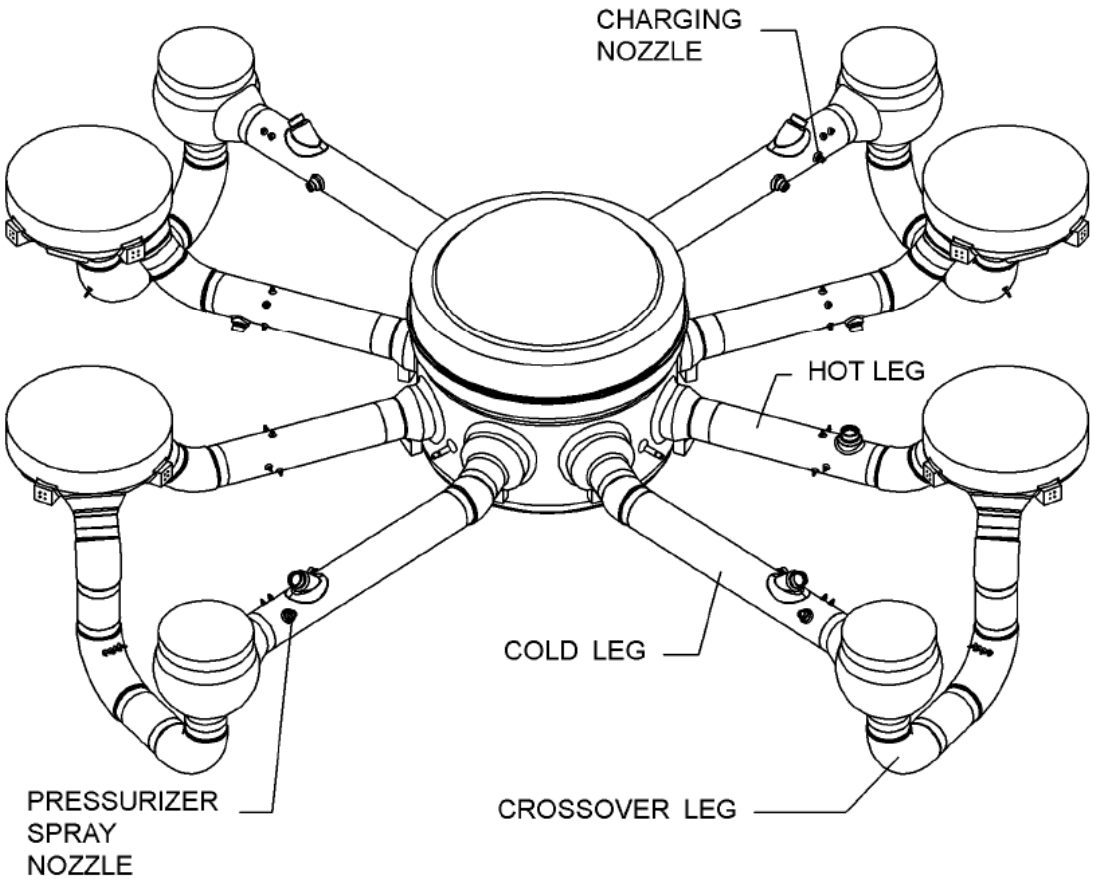

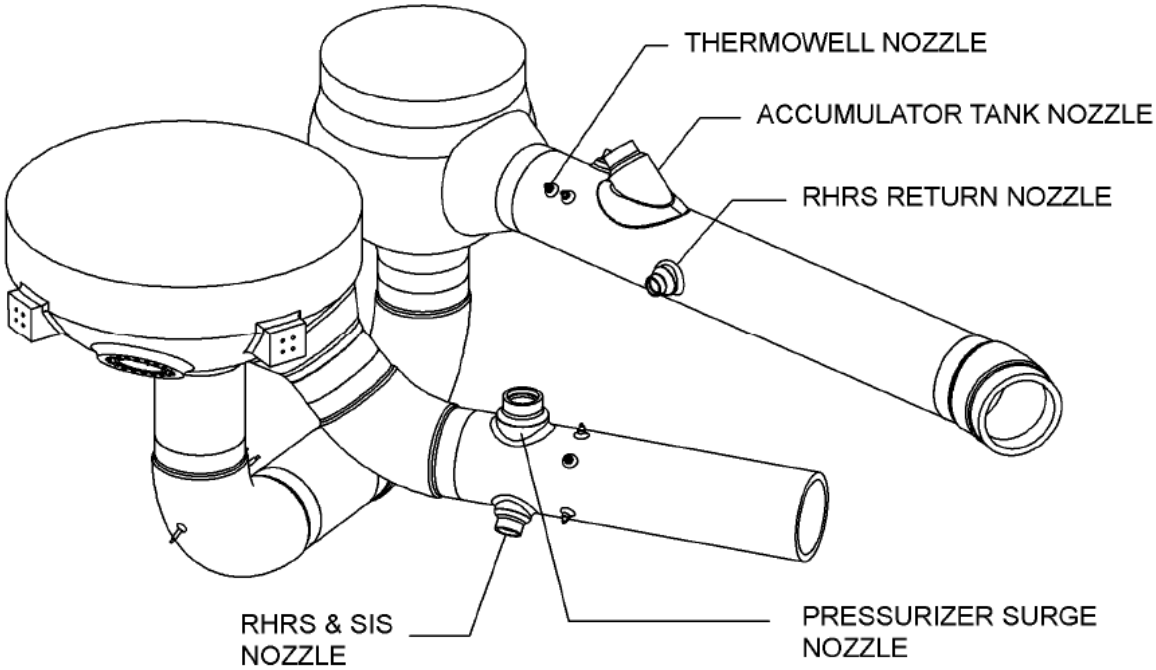

Figure 3-4 Reactor Coolant Piping Configuration

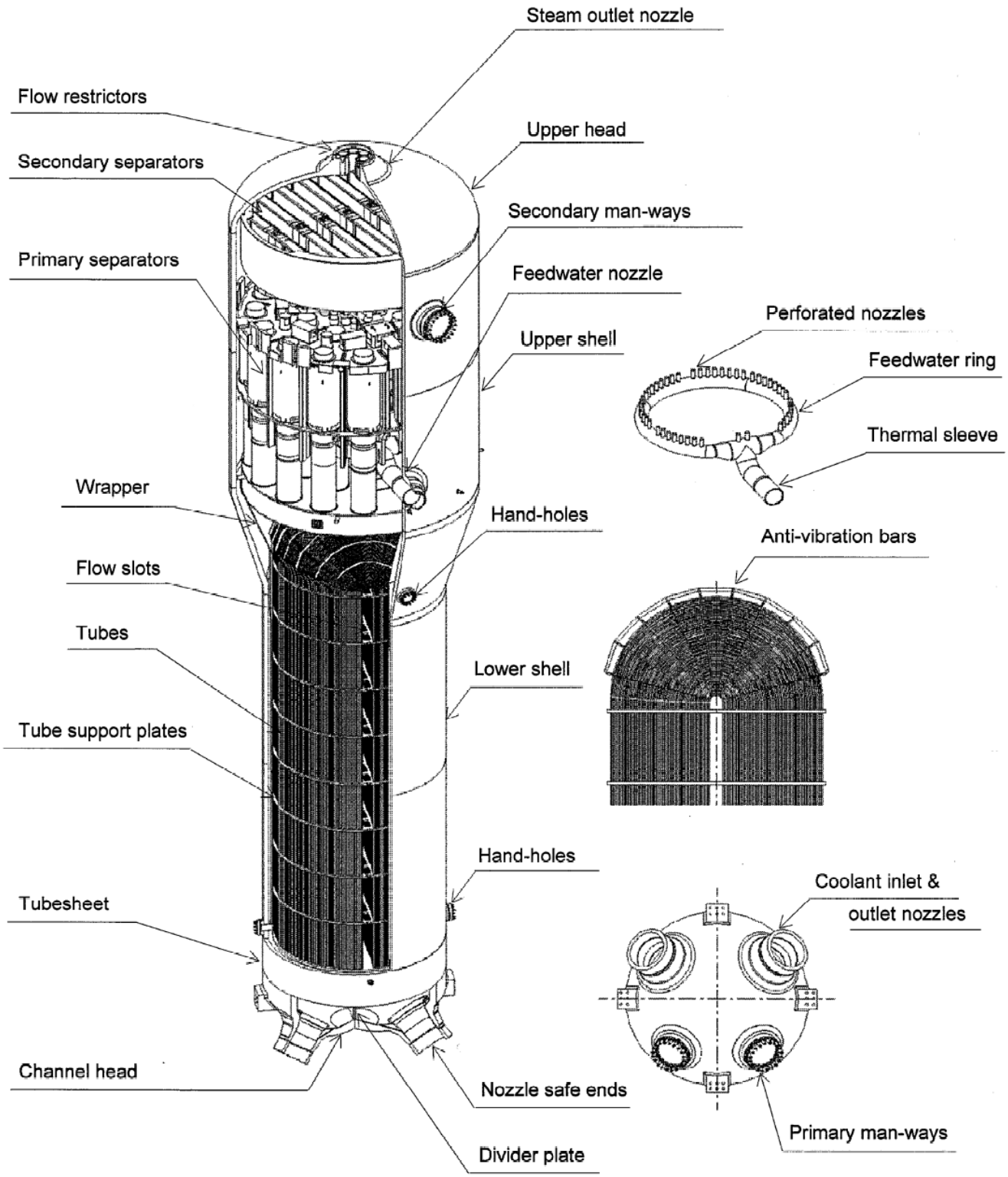

Figure 3-5 Steam Generator

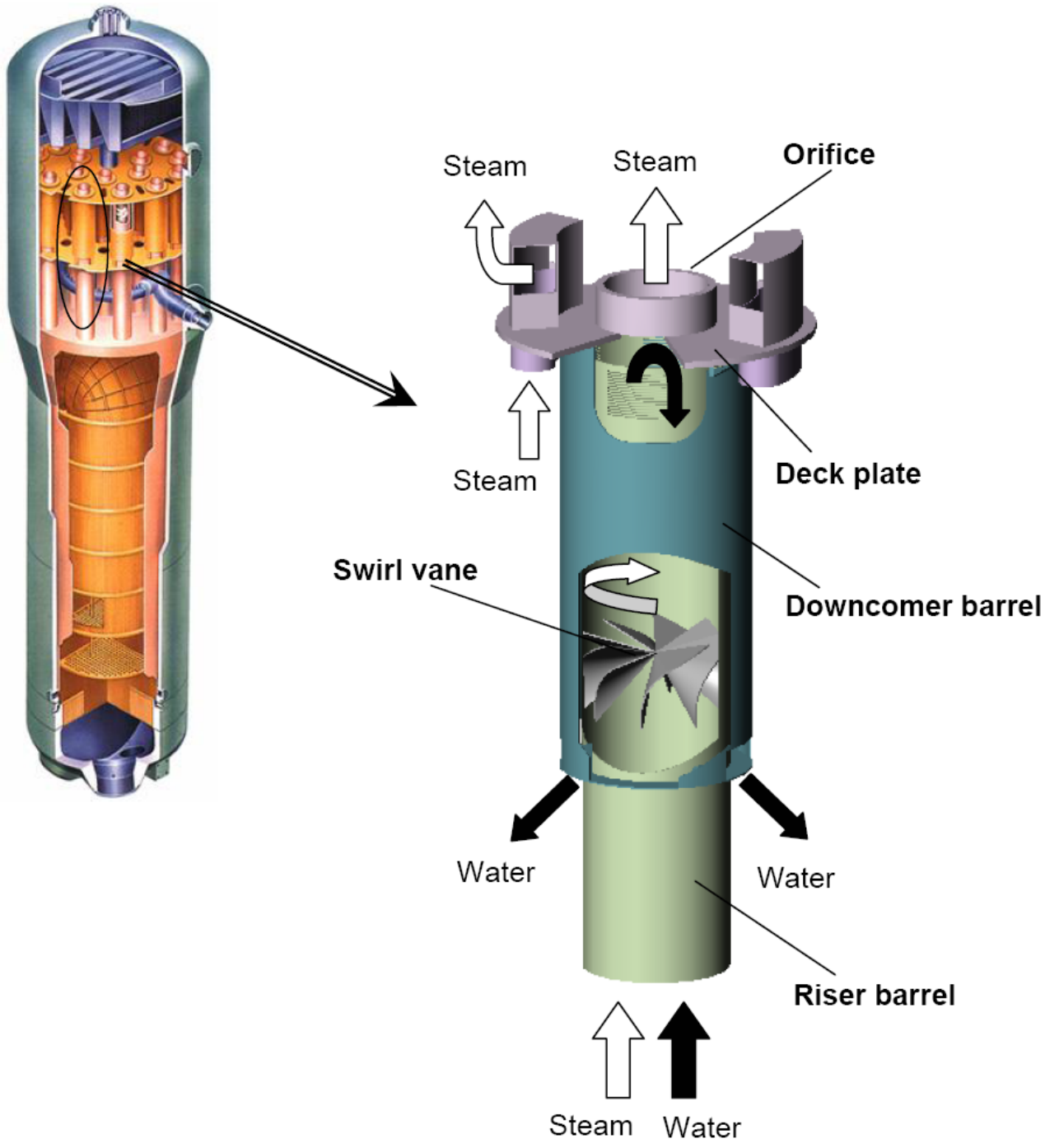

Figure 3-6 High-Performance Primary Separator

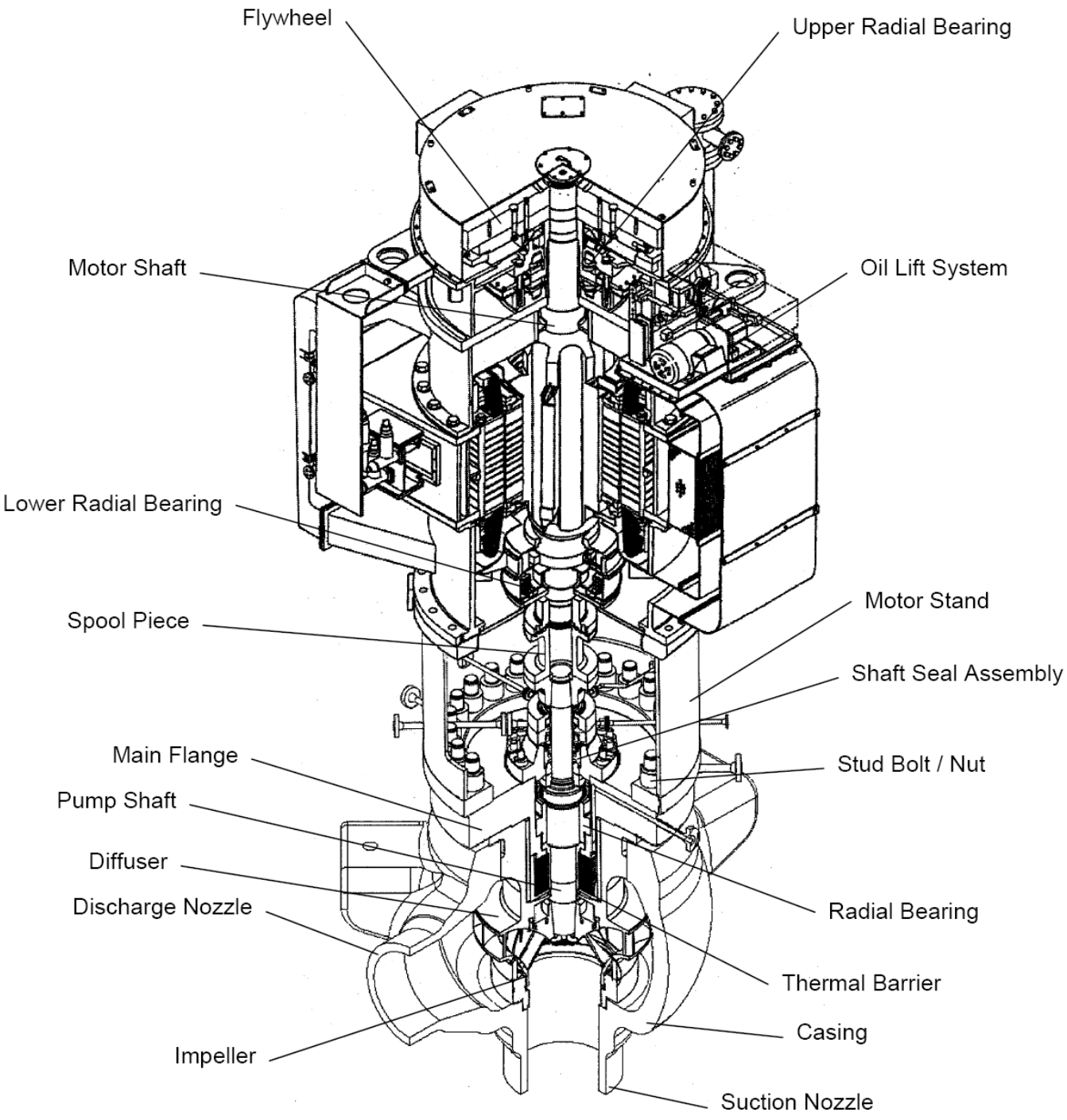

Figure 3-7 Reactor Coolant Pump

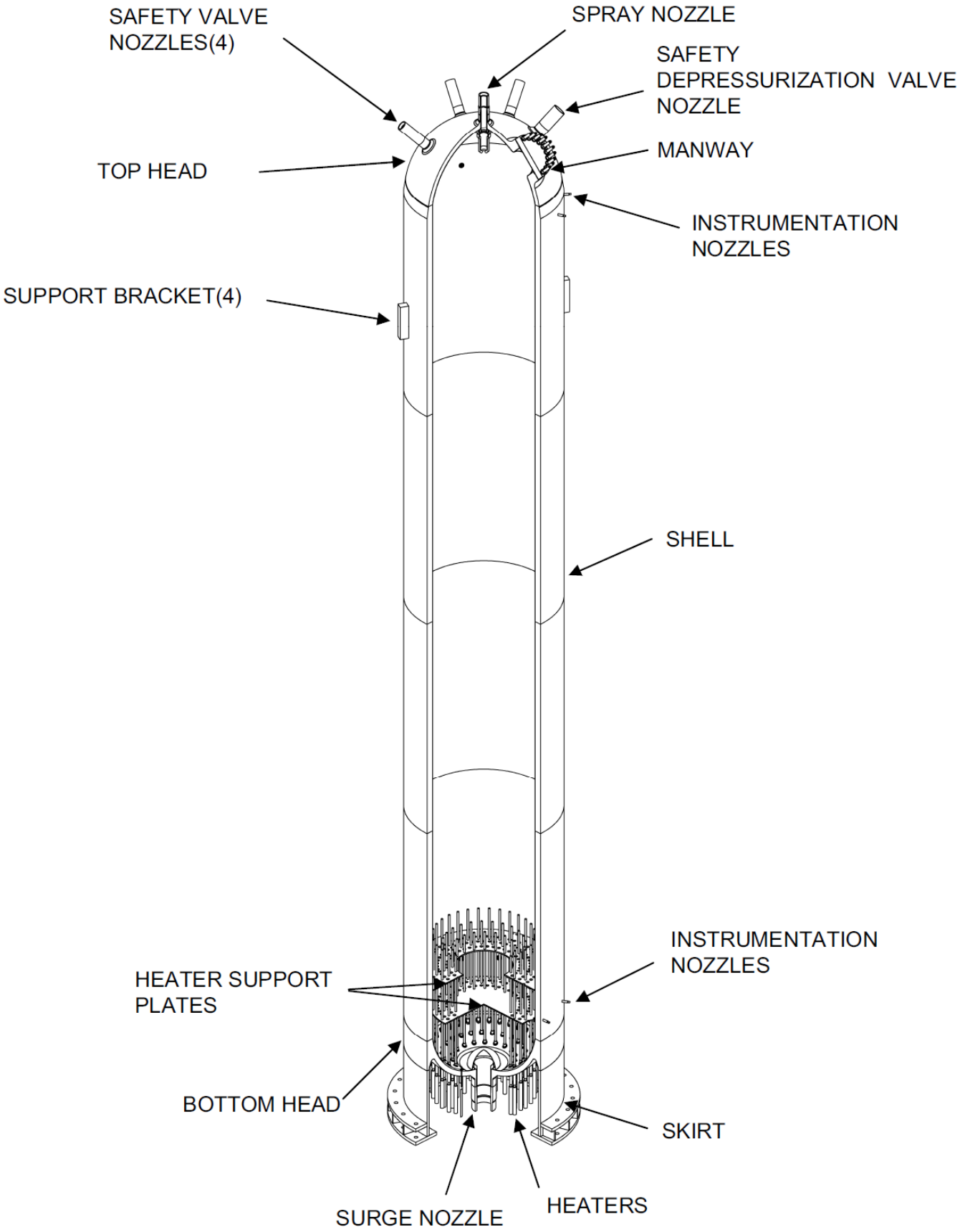

Figure 3-8 Pressurizer

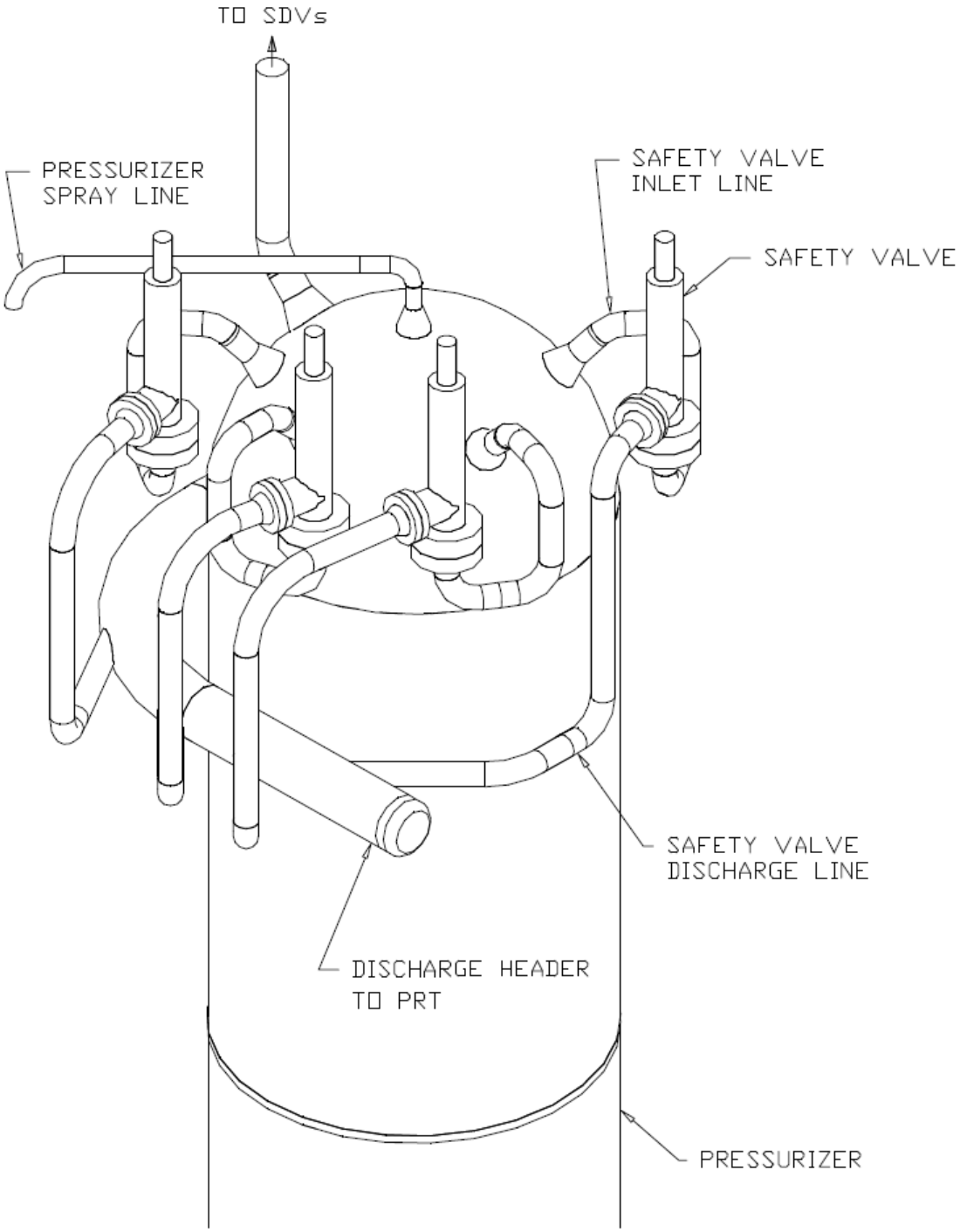

Figure 3-9 Pressurizer Relief Valve Mounting

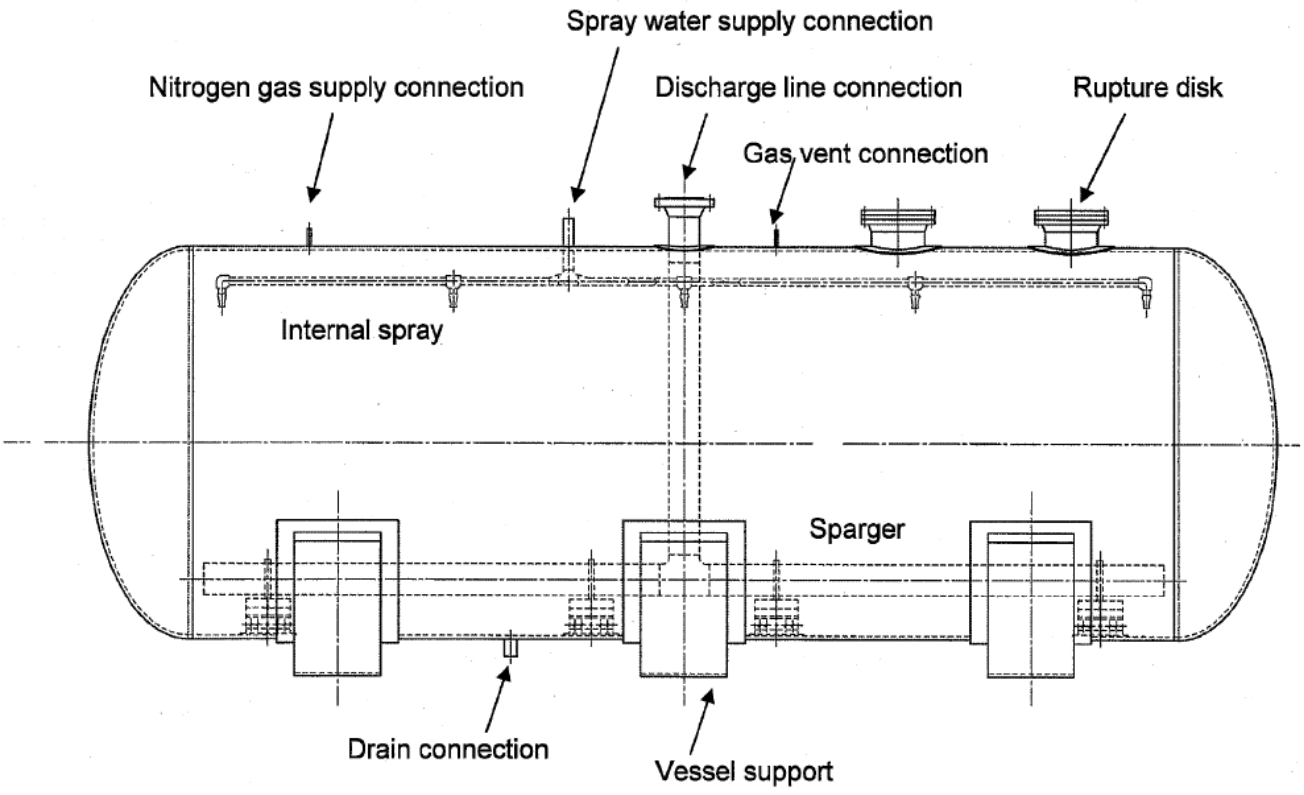

Figure 3-10 Pressurizer Relief Tank