5.4 Component and Subsystem Design

5.4.1 Reactor Coolant Pump Assembly

5.4.1.1 Design Bases

The reactor coolant pump (RCP) is an integral part of the reactor coolant pressure boundary. It is designed, fabricated, erected, and tested to quality standards consistent with the requirements set forth in 10 CFR 50, 50.55a and General Design Criterion 1. The reactor coolant pump casing and stator shell provide a barrier to the release of reactor coolant and other radioactive materials to the containment atmosphere.

The reactor coolant pump provides an adequate core cooling flow rate for sufficient heat transfer to maintain a departure from nucleate boiling ratio (DNBR) greater than the limit established in the safety analysis. Pump assembly rotational inertia is provided by a flywheel (inside the pump pressure boundary) motor rotor, and other rotating parts. This rotational inertia provides flow during coastdown conditions. This forced flow following an assumed loss of electrical power and the subsequent natural circulation effect in the reactor coolant system (RCS) adequately cools the core. The net positive suction head (NPSH) required for operation is by conservative pump design always less than that available by system design and operation.

The reactor coolant pump pressure boundary shields the balance of the reactor coolant pressure boundary from theoretical worst-case flywheel failures. The reactor coolant pump pressure boundary is analyzed to demonstrate that a fractured flywheel cannot breach the reactor coolant system boundary (impacted pressure boundary components are stator closure, stator main flange, and lower stator flange) and impair the operation of safety-related systems or components. This meets the requirements of General Design Criteria 4. The reactor coolant pump flywheel is designed, manufactured, and inspected to minimize the potential for the generation of high-energy fragments (missiles) under any anticipated operating or accident condition consistent with the intent of the guidelines set forth in Standard Review Plan Section 5.4.1.1 and Regulatory Guide 1.14. Each flywheel is tested at an overspeed condition to verify the flywheel design and construction.

5.4.1.2 Pump Assembly Description

5.4.1.2.1 Design Description

[*The reactor coolant pump is a single-stage, hermetically sealed, high-inertia, centrifugal sealless pump of canned motor design.*]* It pumps large volumes of reactor coolant at high pressures and temperature. Figure 5.4-1 shows a reactor coolant pump. Table 5.4-1 gives the design parameters.

A reactor coolant pump is directly connected to each of two outlet nozzles on the steam generator channel head. The two pumps on a steam generator turn in the same direction.

A sealless pump contains the motor and all rotating components inside a pressure vessel. The pressure vessel consists of the pump casing, stator closure, stator main flange, stator shell, stator lower flange, and stator cap, which are designed for full reactor coolant system pressure. In a

*NRC Staff approval is required prior to implementing a change in this information; see DCD Introduction Section 3.5.

canned motor pump, the stator and rotor are encased in corrosion-resistant cans that prevent contact of the rotor bars and stator windings by the reactor coolant. Because the shaft for the impeller and rotor is contained within the pressure boundary, seals are not required to restrict leakage out of the pump into containment. The connection between the pump casing and the stator closure is provided with a welded canopy type seal assembly, which provides definitive leak protection for the pump closure. Access to the internals of the pump and motor is by severing the canopy seal weld. When the pump is reassembled, a canopy seal is rewelded. Canned motor reactor coolant pumps have a long history of safe, reliable performance in military and commercial nuclear plant service.

The reactor coolant pump driving motor is a vertical, water-cooled, squirrel-cage induction motor with a canned rotor and stator. It is designed for removal from the casing for inspection, maintenance, and replacement, if required. The stator can protects the stator (windings and insulation) from the controlled portion of the reactor coolant circulating inside the motor and bearing cavity. The can on the rotor isolates the copper rotor bars from the system and minimizes the potential for the copper to plate out in other areas.

The motor is cooled by primary reactor coolant system coolant circulating through the motor cavity and by component cooling water circulating through a cooling jacket on the outside of the motor housing. Primary coolant used to cool the motor enters the lower end of the rotor and passes axially through the motor cavity to remove heat from the rotor and stator. An auxiliary impeller provides the motive force for circulating the coolant. Heat from the primary coolant is transferred to component coolant water in an external heat exchanger.

Each pump motor is driven by a variable speed drive, which is used for pump startup and operation when the reactor trip breakers are open. When the reactor trip breakers are closed, the variable frequency drives are bypassed and the pumps run at constant speed.

Flywheel assemblies provide rotating inertia that increases the coastdown time for the pump. Each flywheel assembly is of bi-metallic design consisting of a tungsten heavy metal alloy for mass with Type 403 stainless steel and 18Mn-18Cr alloy steel structural components. The upper flywheel assembly is located between the motor and pump impeller. The lower assembly is located below the canned motor, with the thrust bearing. Surrounding the flywheel assemblies are the heavy walls of the stator closure, casing, thermal barrier, or stator lower flange.

The materials in contact with the reactor coolant and cooling water (with the exception of the bearing material) are austenitic stainless steel, nickel-chromium-iron alloy, or equivalent corrosion-resistant material.

There are two journal bearings, one at the bottom of the rotor shaft and the other between the upper flywheel assembly and the motor. The bearings are a hydrodynamic film-riding design. During rotor rotation, a thin film of water forms between the journal and pads, providing lubrication.

The thrust bearing assembly is at the bottom of the rotor shaft. The pivoted pad hydrodynamic bearing provides positive axial location of the rotating assembly regardless of operating conditions.

The reactor coolant pump is equipped with a vibration monitoring system that continuously monitors pump structure (frame) vibrations. Five vibration monitors provide pump vibration information. The readout equipment includes warning alarms and high-vibration level alarms, as well as output for analytical instruments.

Four resistance temperature detectors (RTDs) monitor motor cooling circuit water temperature. These detectors provide indication of anomalous bearing or motor operation, as well as leakage through the pump labyrinth seal into the stator cavity as a result of a leak in the pump external heat exchanger. They also provide a system for automatic shutdown in the event of a prolonged loss of component cooling water or a large tube leak from the external heat exchanger into the CCS.

A speed sensor monitors rotor rpm's. Additionally, voltage and current sensors provide information on motor load and electrical input.

5.4.1.2.2 Description of Operation

Reactor coolant is pumped by the main impeller. It is drawn through the eye of the impeller and discharged via the diffuser out through the radial discharge nozzle in the side of the casing. Once the motor housing is filled with coolant, the labyrinth seals around the shaft between the impeller and the thermal barrier minimize the flow of coolant into the motor during operation.

An auxiliary impeller at the lower part of the rotor shaft circulates a controlled volume of the primary coolant through the motor cavity and external heat exchanger. The coolant is cooled to about 150°F by component cooling water circulating on the shell side of the external heat exchanger. The cooled reactor coolant then passes through the motor cavity, where it removes heat from the rotor and stator and lubricates the motor's hydrodynamic bearings.

The variable frequency drives enable the startup of the reactor coolant pumps at slow speeds to decrease the power required from the pump motor during operation at cold conditions. The variable frequency drive provides operational flexibility during pump startup and reactor coolant system heatup. During a plant startup, the general startup procedure for the pumps is for the operator to start the pumps at a low speed. During reactor coolant system heatup, the pumps are run at the highest speed that is within the allowable motor current limits. As the reactor coolant temperature increases, the allowable pump speed also increases. Before the reactor trip breakers are closed, the variable frequency controllers are bypassed and the pumps run at constant speed.

During all power operations (Modes 1 and 2), the variable frequency drives are bypassed and the pumps run at constant speed.

5.4.1.3 Design Evaluation

5.4.1.3.1 Pump Performance

The reactor coolant pump is sized to deliver a flow rate that equals or exceeds the required flow rate. Testing prior to plant startup confirms the total delivery capability of the reactor coolant pump. See Section 14.2. Thus, adequate forced circulation coolant flow is confirmed prior to initial plant operation.

The required net positive suction head is provided with ample margin to provide operational integrity and minimize the potential for cavitation. The AP1000 does not require reactor coolant pump operation to achieve safe shut down. Minimum net positive suction head requirements are not required to provide safe operation of the AP1000.

5.4.1.3.2 Overspeed Conditions

Reactor coolant pump overspeed can be postulated for either a fault in the connected electrical system that results in an increase in the frequency of the supplied current or due to a pipe rupture which results in an increase in the flow through the pump as the coolant exits the pipe.

For grid disconnect transients or turbine trips actuated by either the reactor trip system or the turbine protection system, the turbine overspeed control system acts to limit the reactor coolant pump overspeed. The turbine control system acts to rapidly close the turbine governor and intercept valves.

An electrical fault requiring immediate generator trip (with resulting turbine trip) will result in an overspeed condition in the electrically coupled reactor coolant pump no greater than that described previously for the grid disconnect/turbine trip transient.

Pump overspeed from high coolant flow rates associated with pipe rupture events are mitigated by the inertia of the pump, flywheel, and motor and by the connection of the motor to the electrical grid. Because of the application of mechanistic pipe break criteria, dynamic effects such as pump overspeed are not evaluated for breaks in piping in which leak-before-break is demonstrated.

5.4.1.3.3 Pressure Boundary Integrity

The pressure boundary integrity is verified for normal, anticipated transients, and postulated accident conditions. The pressure boundary components (pump casing, stator closure, stator main flange, stator shell, stator lower flange, stator cap, and external piping and tube side of the external heat exchanger) meet the requirements of the ASME Boiler and Pressure Vessel Code, Section III. These components are designed, analyzed, and tested according to the requirements in Paragraph NB-3400 of the ASME Code, Section III. Wells provided for resistance temperature detectors and a phase reference sensor, and speed sensor penetrations also satisfy the requirements of the ASME Code, Section III.

The motor terminals form part of the pressure boundary in the event of a stator-can failure. The ASME Code does not include criteria or methods for completely designing or analyzing such terminals. Motor terminals are designed, analyzed, and tested using criteria established and validated based on many years of service. Where applicable, ASME Code requirements and criteria are used. Individual terminals are hydrostatically tested to test the integrity prior to performance testing.

5.4.1.3.4 Coastdown Capability

It is important to reactor protection that the reactor coolant continues to flow for a time after reactor trip and loss of electrical power. To provide this flow, each reactor coolant pump has a high-density flywheel and high-inertia rotor. The rotating inertia of the pump, motor, and flywheel

is used during the coastdown period to continue the reactor coolant flow. The reactor coolant pump is designed for the safe shutdown earthquake. The coastdown capability of the pump is maintained even for the case of loss of offsite and onsite electrical power coincident with the safe shutdown earthquake. Core flow transients and figures are provided in subsections 15.3.1 and 15.3.2.

A loss of component cooling water has no impact on coastdown capability. The reactor coolant pump can operate without cooling water until a safety-related pump trip occurs on high bearing water temperature. This prevents damage that could potentially affect coastdown.

The reactor trip system maintains the pump operation within the assumptions used for loss of coolant flow analyses. This also provides that adequate core cooling is provided to permit an orderly reduction in power if flow from a reactor coolant pump is lost during operation.

The reactor coolant pump coastdown occurs on a power loss to the plant. The following conditions are assumed to occur simultaneously:

- Reactor coolant system at normal operation temperature and pressure,
- Loss of cooling water,
- Loss of pump power,
- Reactor trip

If the stator can should leak during operation, the reactor coolant may cause a short in the stator windings. In such a case, the result would be the same as a loss of power to that pump. With either a rotor or a stator can failure, no fluid would be lost to the containment.

5.4.1.3.5 Bearing Integrity

The design requirements for the reactor coolant pump bearings provide long life with negligible wear. The vibration warning level and high-vibration level alarm set-points are, in part, based on evaluation of the effect of vibration on bearing life.

The bearings provide adequate stiffness to control shaft motion, protect the pump impeller and shaft labyrinths from wear, and avoid contact between the motor stator and rotor. The bearing loads are maintained within the load capabilities of hydrodynamic journal bearings even under the severe conditions experienced during seismic events. The bearing/shaft design and loadings are established by analysis and testing.

The frame vibration detectors provide indication of bearing performance. Control room indicators and alarms provide indication for operator action.

The bearing cooling provisions include a temperature monitoring system. The system operates continuously and has at least four redundant indicators per pump. Upon initiation of failure, the system indicates and alarms in the control room as a high bearing water temperature. All of the pumps trip when the high temperature setpoint is reached.

5.4.1.3.6 Integrity of Rotating Components

The rotating components of the pump and motor are analyzed for dynamic characteristics, including natural frequencies, stability, and forced responses to normal operation loads, and for several postulated fault conditions associated with the rotating masses. The fault conditions include seized rotor events, and integrity of the rotating components, including the flywheel.

5.4.1.3.6.1 Natural Frequency and Critical Speeds

The damped natural frequency of the reactor coolant pump rotating assembly is greater than 120 percent of the normal operating speed.

Determination of the damped natural frequency of the reactor coolant pump rotor bearing system model includes the effects of the bearing films, can annular fluid interaction, motor magnetic phenomena, and pump structure. The damped natural frequencies for the AP1000 reactor coolant pump exhibit sufficient energy dissipation to be stable. The high degree of damping provides smooth pump operation.

The pump is analyzed for the response of the rotor and stator to external forcing functions. The support and connection of the pump to the steam generator and piping are considered in the analysis. The responses are evaluated using criteria including critical loads, stress deformation, wear, and displacement limits to establish the actual system critical speeds.

5.4.1.3.6.2 Rotor Seizure

The design of the pump is such as to preclude the instantaneous stopping of any rotating component of the pump or motor. The rotating inertia and power supplied to the motor would overcome interference between the impeller, bearings, flywheel assemblies, motor rotor, or rotor can and the surrounding components for a period of time. A change in the condition of any of the components sufficient to cause an interference would be indicated by the instrumentation monitoring speed, vibration, temperature, or current.

The reactor coolant system and reactor coolant pump are analyzed for a locked rotor event. To analyze the mechanical and structural effects of a rapid slow down of the rotating assembly, a failure of the rotating assembly is postulated that results in deformation that causes an interference with the surrounding reactor coolant pump components. For such an interference, the pump and motor are postulated to come to a complete stop in a very short time period. This assumption bounds other postulated mechanisms for a rapid slowdown of the rotor, including impeller rub and rotor or stator can failure. The connection of the pump with the steam generator and discharge piping is analyzed for the vibration of the pump, hydraulic effects, and the torque due to the rapid slow down of the rotating assembly. The stresses in the pump casing, motor housing, steam generator channel head, and piping are analyzed using ASME Code, Section III, Service Level D limits for this condition.

The transient analysis of thermal and hydraulic effects of a postulated locked rotor event is based on a nonmechanistic, instantaneous stop of the impeller. This conservative assumption bounds any slower stop and provides a comparison with the same analysis done for other nuclear power plants. The transient analysis considers the effect of the locked rotor on the reactor core and the

reactor coolant system pressure. The results of the transient analysis are found in Chapter 15 and show that the reactor coolant system pressure does not exceed the system design pressure.

5.4.1.3.6.3 Flywheel Integrity

The reactor coolant pump in the AP1000 complies with the requirement of General Design Criterion (GDC) Number 4. That Criterion states that components important to safety be protected against the effects of missiles.

The flywheel assemblies are located within and surrounded by the heavy walls of the stator closure, stator main flange, casing, thermal barrier, or lower stator flange. In the event of a postulated worst-case flywheel assembly failure, the surrounding structure can, by a large margin, contain the energy of the fragments without causing a rupture of the pressure boundary. The analysis in Reference 10 of the capacity of the housing to contain the fragments of the flywheel is done using the energy absorption equations of Hagg and Sankey (Reference 2).

Compliance with the requirement of GDC 4 related to missiles can be demonstrated without reference to flywheel integrity, nevertheless, the intent of the guidelines of Regulatory Guide 1.14 is followed in the design and fabrication of the flywheel. The guidelines in Regulatory Guide 1.14 apply to steel flywheels. Since the bi-metallic design of the AP1000 reactor coolant pump flywheel does not respond in the same manner as homogeneous steel, many of the guidelines in the Regulatory Guide are not directly applicable.

The reactor coolant pump flywheel assemblies are fabricated from a tungsten heavy alloy, Type 403 stainless steel, and 18Mn-18Cr alloy steel (ASTM A289, Grade 8). Heavy alloy segments (ASTM B777, Class 4) are fitted to a stainless steel hub (ASTM A336, Grade F6); these segments are not relied upon structurally. The segments are held into place by an interference fit retainer cylinder of 18Mn-18Cr alloy steel placed over the outside of the assembly. The assembly is hermetically sealed from primary coolant by endplates and an outer thin shell of Alloy 625. Ni/Fe/Cr Alloy 600 is not used for this application.

The bi-metallic flywheel design will be manufactured using multiple processes and materials. In accordance with Regulatory Guide 1.14, each structural component of the bi-metallic flywheel will be inspected prior to final assembly according to its fabrication and the procedures outlined in Section III, NB-2500 of the ASME Code. The Type 403 stainless steel inner hub material will be subject to impact testing using three Charpy V-notch tests per ASTM A370, magnetic particle examination per ASTM A788 Supplemental Requirement S18, and ultrasonic examination per ASTM A788 Supplemental Requirement S20, Acceptance Levels BR and S. The retainer ring will be subject to fracture toughness testing per ASTM E399, magnetic particle examination per ASTM A788 Supplemental Requirement S18, and ultrasonic examination per ASTM A788 Supplemental Requirement S20, Acceptance Levels BR and S. Following finishing operations on the flywheel assembly the outside surface of the retainer ring and the inside surfaces of the inner hub are subject to liquid penetrant inspections in conformance with the requirements of ASTM-E-165 (Reference 4). In-process controls used during the construction of the flywheel assemblies also provide for the quality of the completed assemblies.

The design speed of the flywheel is defined as 125 percent of the synchronous speed of the motor. The design speed envelopes all expected overspeed conditions. At the normal speed the calculated maximum primary stress in the flywheel assemblies is less than one third of minimum yield strength. At the design speed the calculated maximum primary stress in the flywheel assemblies is less than two thirds of minimum yield strength.

An analysis of the flywheel failure modes of ductile failure, nonductile failure and excessive deformation of the flywheel is performed to evaluate the flywheel design. The analysis is performed to determine that the critical flywheel failure speeds, based on these failure modes, are greater than the design speed. The critical flywheel failure speeds are not the same as the critical speed identified for the rotor. The critical flywheel failure speeds are greater than the design speed. The overspeed condition for a postulated pipe rupture accident is less than the critical flywheel failure speeds.

The flywheel assemblies are sealed within a welded nickel-chromium-iron alloy enclosure to prevent contact with the reactor coolant or any other fluid. The enclosure minimizes the potential for corrosion of the flywheel and contamination of the reactor coolant. The enclosure material specifications are ASTM-B-443 and ASTM-B-564. Even though the welds of the flywheel enclosure are not external pressure boundary welds, these welds are made using procedures and specifications that follow the rules of the ASME Code. A dye penetrant test of the enclosure welds is performed in conformance with these requirements. The final assemblies are leak tested using a leak test hole located in the inner hub.

No credit is taken in the analysis of the flywheel missile generation for the retention of the fragments by the enclosure. A leak in the enclosure during operation could result in an out-of-balance flywheel assembly. An out-of-balance flywheel exhibits an increase in vibration, which is monitored by vibration instrumentation.

The flywheel enclosure contributes only a small portion of the energy in a rotating flywheel assembly.

The stress in the welds of the flywheel enclosure components for normal and design speeds are within the criteria in subsection NG of the ASME Code, which is used as a guideline.

Pipe rupture overspeed is based on a break of the largest branch line pipe connected to the reactor coolant system piping that is not qualified for leak-before-break criteria. The exclusion of the reactor coolant loop piping and branch line piping of 6 inches or larger size from the basis of the pump loss of coolant accident overspeed condition is based on the provision in GDC 4 to exclude dynamic effects of pipe rupture when a leak-before-break analysis demonstrates that appropriate criteria are satisfied. See subsection 3.6.3 for a discussion of leak-before-break analyses. The criteria of subsection 3.6.2 are used to determine pipe break size and location for those piping systems that do not satisfy the requirements for mechanistic pipe break criteria.

In addition to material specification and non destructive testing requirement, each flywheel is subject to a spin test at 125 percent overspeed, followed by visual inspection, during manufacture. This demonstrates quality of the flywheel. Since the basis for the safety of the flywheel is retention of the fragments within the reactor coolant pump pressure boundary, periodic inservice

inspections of the flywheel assemblies are not required to ensure that the basis for safe operation is maintained.

Because of the configuration of the flywheel assemblies, inservice inspection of the flywheel assemblies may not result in significant inspection results. Inspection of the flywheel assemblies would require removal of the assemblies from the shaft, removal of the enclosures, rewelding of the enclosure, reassembly, and balancing of the pump shaft. Opening of the pump assembly for a periodic inspection of the enclosure would result in an increased occupational radiation exposure and would not be consistent with goals relative to maintaining exposure as low as reasonably achievable. Also, opening the pump may increase the potential for entry of foreign objects into the motor area. For these reasons, routine, periodic inspection of the flywheel assemblies in the AP1000 reactor coolant pump is not recommended.

5.4.1.3.6.4 Other Rotating Components

The rotating components (other than the flywheel), including the impeller, auxiliary impeller, rotor, and rotor can, are evaluated for potential missile generation. In the event of fracture, the fragments from these components are contained by the surrounding pressure housing. The impeller is contained by the pump casing. The rotor and rotor can are contained by the stator, stator can, and motor housing. The auxiliary impeller is contained by the motor housing. In each case, the energy of the postulated fragments is less than that required to penetrate through the pressure boundary.

5.4.1.4 Tests and Inspections

Reactor coolant pump construction is subject to a quality assurance program. The pressure boundary components meet requirements established by the ASME Code. In addition, the flywheel is subject to quality assurance requirements. Table 5.4-3 outlines the inspection included in the reactor coolant pump quality assurance program.

The reactor coolant pump inservice inspection program is according to the ASME Code, Section XI.

The design enables removal of the pump internals for inspection of the pump casing, if required. As noted earlier, routine inspections of the impeller, flywheel, and motor internals are not required for safe operation of the pump.

5.4.1.4.1 Reactor Coolant System Flow Rate Verification

Initial verification of the reactor coolant system flow rate is made during the plant initial test program. Reactor coolant system flow rates are measured during the pre-core load hot functional tests, and during the startup tests. The objective of these tests is to verify that the reactor coolant system flow rate meets the flow rate range of Technical Specification 3.4.1.

After the pre-core reactor coolant system flow rate measurement is taken, analytical adjustments are made to the pre-core measured reactor coolant system flow rate to predict a post-core reactor coolant system flow rate. Calculations of the reactor coolant system flow rate with and without the core are performed. The calculation of the pre-core load reactor coolant system flow rate is

compared with results of the pre-core load flow testing, and this information will be used in the calculation of the post-core load reactor coolant system flow rate as appropriate. The predicted post-core load reactor coolant system flow rate is checked to verify that it satisfies Technical Specification 3.4.1. Verifications are also made that the post-core load reactor coolant system flow rates satisfy Technical Specification 3.4.1 flow limits during startup testing.

5.4.2 Steam Generators

5.4.2.1 Design Bases

The steam generator channel head, tubesheet, and tubes are a portion of the reactor coolant pressure boundary. The tubes transfer heat to the steam system while retaining radioactive contaminants in the primary system. The steam generator removes heat from the reactor coolant system during power operation and anticipated transients and under natural circulation conditions. The steam generator heat transfer function and associated secondary water and steam systems are not required to provide a safety-related safe shutdown of the plant.

The steam generator secondary shell functions as containment boundary during operation and during shutdown when access opening closures are in place.

Tables 5.4-4 and 5.4-5 give steam generator design data. AP1000 equipment, seismic and ASME Boiler and Pressure Vessel Code classifications of the steam generator components are discussed in Section 3.2. ASME Code and Code Case compliance are discussed in subsection 5.2.1. The ASME Code classification for the secondary side is specified as Class 2. The pressure-retaining parts of the steam generator, including the primary and secondary pressure boundaries, are designed to satisfy the criteria specified in Section III of the ASME Code for Class 1 components.

Subsection 3.9.3 discusses the design stress limits, loads, and combined loading conditions. Subsection 3.9.1 discusses the transient conditions applicable to the steam generator. The number of transients is based on 60 years of operation.

In addition to the loading conditions associated with pressure and temperature variations for transient and anticipated accident conditions, the steam generator is evaluated for fluid borne and structural vibration originating with the reactor coolant pump. The steam generator is also evaluated for the load on the primary outlet nozzles resulting from a postulated locked reactor coolant pump rotor. See subsection 5.4.1.3.6 for a discussion of the locked rotor postulation.

Chapter 11 gives estimates of radioactivity levels anticipated in the secondary side of the steam generators during normal operation and the bases for the estimates. Chapter 15 discusses the accident analysis of a steam generator tube rupture.

The water chemistry on the primary side, selected to provide the necessary boron content for reactivity control, should minimize corrosion of reactor coolant system surfaces. The effectiveness of the water chemistry in the control of the secondary side corrosion is discussed in Chapter 10. Compatibility of steam generator tubing with both primary and secondary coolants is discussed further in subsection 5.4.2.4.3.

The steam generator is designed to minimize the potential for mechanical or flow-induced vibration. Tube support adequacy is discussed in subsection 5.4.2.3.3. The tubes and tubesheet are analyzed and confirmed to withstand the maximum accident loading conditions defined in subsection 3.9.3. Further consideration is given in subsection 5.4.2.3.4 to the effect of tube-wall thinning on accident condition stresses.

5.4.2.2 Design Description

The AP1000 steam generator is a vertical-shell U-tube evaporator with integral moisture separating equipment. Figure 5.4-2 shows the steam generator, indicating several of its design features.

The design of the Model Delta-125 steam generator, except for the configuration of the channel head, is similar to an upgraded Model Delta-75 steam generator. The Delta-75 steam generator has been placed in operation as a replacement steam generator.

Steam generator design features are described in the following paragraphs.

On the primary side, the reactor coolant flow enters the primary chamber via the hot leg nozzle. The lower portion of the primary chamber is elliptical and merges into a cylindrical portion, which mates to the tubesheet. This arrangement provides enhanced access to all tubes, including those at the periphery of the bundle, with robotics equipment. This feature enhances the ability to inspect, replace and repair portions of the AP1000 unit compared to the more spherical primary chamber of earlier designs. The head is divided into inlet and outlet chambers by a vertical divider plate extending from the apex of the head to the tubesheet.

The reactor coolant flow enters the inverted U-tubes, transferring heat to the secondary side during its traverse, and returns to the cold leg side of the primary chamber. The flow exits the steam generator via two cold leg nozzles to which the reactor coolant pumps are directly attached. A high-integrity, nickel-chromium-iron (Alloy 690) weld is made to the nickel-chromium-iron alloy buttered ends of these nozzles.

A passive residual heat removal (PRHR) nozzle attaches to the bottom of the channel head of the loop 1 steam generator on the cold leg portion of the head. This nozzle provides recirculated flow from the passive residual heat removal heat exchanger to cool the primary side under emergency conditions. A separate nozzle on one of the steam generator channel heads is connected to a line from the chemical and volume control system. The nozzle provides for purification flow and makeup flow from the chemical and volume control system to the reactor coolant system.

The AP1000 steam generator channel head has provisions to drain the head. To minimize deposits of radioactive corrosion products on the channel head surfaces and to enhance the decontamination of these surfaces, the channel head cladding is machined or electropolished for a smooth surface. The primary manways provide enhanced primary chamber access compared to previous model steam generators.

Should steam generator replacement using a channel head cut be required, the arrangement of the AP1000 steam generator channel head facilitates steam generator replacement in two ways. It is

completely unobstructed around its circumference for mounting cutting equipment. And is long enough to permit post-weld heat treatment with minimal effect of tubesheet acting as a heat sink.

The tubes are fabricated of nickel-chromium-iron Alloy 690. The tubes undergo thermal treatment following tube-forming operations. The tubes are tack-expanded, welded, and expanded over the full depth of the tubesheet. Full depth expansion was selected because of its capability to minimize secondary water access to the tube-to-tube-sheet crevice. The method by which the tubes are expanded into the tubesheet is determined based on consideration of the residual stresses and the resultant susceptibility of the tube to degradation. Residual stresses (and the expanded tube's susceptibility to degradation) are limited, in part, through tight control of the pre-expansion clearance between the tube and tubesheet hole.

Support of the tubes is provided by ferritic stainless steel tube support plates. The holes in the tube support plates are broached with a hole geometry to promote flow along the tube and to provide an appropriate interface between the tube support plate and the tube. Figure 5.4-3 shows the support plate hole geometry. Anti-vibration bars installed in the U-bend portion of the tube bundle minimize the potential for excessive vibration.

Steam is generated on the shell side, flows upward, and exits through the outlet nozzle at the top of the vessel. Feedwater enters the steam generator at an elevation above the top of the U-tubes through a feedwater nozzle. The feedwater enters a feedring via a welded thermal sleeve connection and leaves it through nozzles attached to the top of the feedring. The nozzles are fabricated of an alloy that is very resistant to erosion and corrosion with the expected secondary water chemistry and flow rate through the nozzles. After exiting the nozzles, the feedwater flow mixes with saturated water removed by the moisture separators. The flow then enters the downcomer annulus between the wrapper and the shell.

Fluid instabilities and water hammer phenomena are important considerations in the design of steam generators. Water level instabilities can occur from density wave instabilities which could affect steam generator performance. Density wave instability is avoided in the AP1000 steam generator by including appropriate pressure losses in the downcomer and the risers that lead to negative damping factors.

Steam generator bubble collapse water hammer has occurred in certain early pressurized water reactor steam generator designs having feedrings equipped with bottom discharge holes. Prevention and mitigation of feedline-related water hammer has been accomplished through an improved design and operation of the feedwater delivery system. The AP1000 steam generator and feedwater system incorporate features designed to eliminate the conditions linked to the occurrence of steam generator water hammer. The steam generator features include introducing feedwater into the steam generator at an elevation above the top of the tube bundle and below the normal water level by a top discharge feedring. The top discharge of the feedring helps to reduce the potential for vapor formation in the feedring. This minimizes the potential for conditions that can result in water hammer in the feedwater piping. The feedwater system features (subsection 10.4.7 discusses in more detail) designed to prevent and mitigate water hammer include a short, horizontal or downward sloping feedwater pipe at steam generator inlet.

These features minimize the potential for trapping pockets of steam which could lead to water hammer events.

Stratification and striping are reduced by an upturning elbow inside the steam generator which raises the feedring relative to the feedwater nozzle. The elevated feedring reduces the potential for stratified flow by allowing the cooler, more dense feedwater to fill the nozzle/elbow arrangement before rising into the feedring.

The potential for water hammer, stratification, and striping is additionally reduced by the use of a separate startup feedwater nozzle. The startup feedwater nozzle is located at an elevation that is the same as the main feedwater nozzle and is rotated circumferentially away from the main feedwater nozzle. A startup feedwater spray system independent of the main feedwater feedring is used to introduce startup feedwater into the steam generator. The layout of the startup feedwater piping includes the same features as the main feedwater line to minimize the potential for waterhammer. The startup feedwater system is used to introduce water into the secondary side of the steam generator as described in subsection 10.4.7.2.3.

At the bottom of the wrapper, the water is directed toward the center of the tube bundle by the lowest tube support plate. This recirculation arrangement serves to minimize the low-velocity zones having the potential for sludge deposition.

As the water passes the tube bundle, it is converted to a steam-water mixture. Subsequently, the steam-water mixture from the tube bundle rises into the steam drum section, where centrifugal moisture separators remove most of the entrained water from the steam. The steam continues to the secondary separators, or dryers, for further moisture removal, increasing its quality to a designed minimum of 99.75 percent (0.25 percent by weight maximum moisture). Water separated from the steam combines with entering feedwater and recirculates through the steam generator. A sludge collector located amidst the inner primary separator risers provides a preferred region for sludge settling away, from the tubesheet and tube support plates. The dry, saturated steam exits the steam generator through the outlet nozzle, which has a steam-flow restrictor. (See subsection 5.4.4.)

5.4.2.3 Design Evaluation

Integrity of the pressure retaining function of the steam generator is provided by compliance with the ASME Code. The evaluation of the stress levels and fatigue usage for the steam generator pressure boundary is calculated for the specified loading conditions and demonstrates that the values are less than the allowable limits. These calculations are documented in a stress report as required by the ASME Code. Corrosion allowances which are consistent with material erosion/corrosion resistance and service environment (velocity, chemistry, etc.) are employed throughout the design.

Meeting the heat transfer requirements and tube vibration and tube wall integrity requirements in addition to the ASME Code requirements is discussed in the following subsections:

5.4.2.3.1 Forced Convection

The steam generator transfers to the secondary coolant loop the heat generated during power operation in the reactor and by the reactor coolant pumps. The evaluation of the steam generator thermal performance, including required heat transfer area and steam flow, uses conservative assumptions for parameters such as primary flow rates and heat transfer coefficients. The effective

heat transfer coefficient is determined by the physical characteristics of the AP1000 steam generator and the fluid conditions in the primary and secondary systems for the nominal 100 percent design case. It includes a conservative allowance for fouling and uncertainty. Tables 5.4-4 and 5.4-5 show the nominal design requirements and parameters. Table 5.1-1 lists additional parameters used to evaluate the steam generator design.

5.4.2.3.2 Natural Circulation Flow

When the normal feedwater supply is not available, water may be supplied to the steam generators by the startup feedwater system. The startup feedwater system is a nonsafety-related system that provides a nonsafety-related source of decay heat removal. In addition, the system is used during startup and shutdown and other times when the normal feedwater system is not available.

When the steam generator is supplied with water from the startup feedwater system, the steam generator has enough surface area and a small enough primary-side hydraulic resistance to remove decay heat from the reactor coolant by natural circulation without operation of the reactor coolant pumps.

If the passive residual heat removal system activates, the passive residual heat removal nozzle connection to the steam generator passes coolant flow from the passive residual heat removal heat exchanger into the cold leg side of the channel head. Coolant is drawn through the reactor coolant pumps into the cold legs and then into the reactor vessel.

5.4.2.3.3 Mechanical and Flow-Induced Vibration under Normal Operating Conditions

Potential sources of tube excitation are considered, including primary fluid flow within the U-tubes, mechanically induced vibration, and secondary fluid flow on the outside of the U-tubes. The effects of primary fluid flow and mechanically induced vibration, including those developed by the reactor coolant pump, are acceptable during normal operation. The primary source of potential tube degradation due to vibration is the hydrodynamic excitation of the tubes by the secondary fluid. This area has been emphasized in both analyses and tests, including evaluation of steam generator operating experience.

Three potential tube vibration mechanisms related to hydrodynamic excitation of the tubes have been identified and evaluated. These include potential flow-induced vibrations resulting from vortex shedding, turbulence, and fluid-elastic vibration mechanisms.

Nonuniform, two-phase turbulent flow exists throughout most of the tube bundle. Therefore, vortex shedding is possible only for the outer few rows of the inlet region. Moderate tube response caused by vortex shedding is observed in some carefully controlled laboratory tests on idealized tube arrays. However, no evidence of tube response caused by vortex shedding is observed in steam generator scale model tests simulating the inlet region. Bounding calculations consistent with laboratory test parameters confirmed that vibration amplitudes would be acceptably small, even if the carefully controlled laboratory conditions were unexpectedly reproduced in the steam generator.

Flow-induced vibrations due to flow turbulence are also small: Root mean square amplitudes are less than allowances used in tube sizing. These vibrations cause stresses that are two orders of

magnitude below fatigue limits for the tubing material. Therefore, neither unacceptable tube wear nor fatigue degradation due to secondary flow turbulence is anticipated.

Tube fluid elastic excitation is potentially more significant than either vortex shedding or turbulence. Relatively large tube amplitudes can feed back proportionally large tube driving forces if an instability threshold is exceeded. Tube support spacing, in both the tube support plates in the straight leg region and the anti-vibration bars in the U-bend region, provides tube response frequencies such that the instability threshold is not exceeded. This approach provides large margins against initiation of fluid elastic vibration for tubes effectively supported by the tube support system.

Small clearances between the tubes and the supporting structure are required for steam generator fabrication. These clearances introduce the potential that any given tube support location may not be totally effective in restraining tube motion if there is a finite gap around the tube at that location. Fluid-elastic tube response within available support clearances is therefore theoretically possible if secondary flow conditions exceed the instability threshold when no support is assumed at the location with a gap around the tube. This potential has been investigated both with tests and analyses for both the U-bend and straight leg regions.

AP1000 steam generator tube wear potential is expected to be within available design margins even for limiting tube fit-up conditions, based on previous experience. The AP1000 steam generator includes a number of features that minimize the potential for tube wear at tube supports and antivibration bars. Provisions to minimize the potential for wear include optimal spacing between the tube supports and the configuration of the anti-vibration bar assemblies. Tube wear is minimized in the tube support plate design by the configuration of the broached hole through the support plate, the surface finish of the broached hole in the tube support plate, the clearance between the tube and the hole in the tube support plate, and tube support plate material selection.

Tube bending stresses corresponding to tube vibration response remain more than two orders of magnitude below fatigue limits as a consequence of vibration amplitudes constrained by the tube supports. These analyses and tests for limiting postulated fit-up conditions include simultaneous contributions from flow turbulence.

As outlined, analyses and tests demonstrate that unacceptable tube degradation resulting from tube vibration is not expected for the AP1000 steam generators. Operating experience with steam generators having the same size tubes and similar flow conditions supports this conclusion.

The U-bend fatigue (discussed in NRC Bulletin 88-02) is not a consideration in the AP1000 steam generators. The mechanism considered in Bulletin 88-02 requires denting of the top tube support plate. But this is not expected with the stainless steel tube support plates in the AP1000 steam generator. Additionally, the location of anti-vibration bars is controlled by in-process dimensional inspection.

5.4.2.3.4 Allowable Tube Wall Thinning under Accident Conditions

An evaluation determined the extent of tube wall thinning that can be tolerated under accident conditions. The worst-case loading conditions are assumed to be imposed upon uniformly thinned

tubes at the most critical location in the steam generator. Under such a postulated design basis accident, vibration is short enough duration that there is no endurance issue to be considered.

The steam generator tubes, existing originally at their minimum wall thickness and reduced by a conservative general corrosion and erosion loss, provide an adequate safety margin (sufficient wall thickness) in addition to the minimum required for a maximum stress less than the allowable stress limit, as defined by the ASME Code.

Studies have been made on AP1000 sized tubing under accident loadings. The results show that the maximum Level D Service condition stress due to combined pipe rupture and safe shutdown earthquake loads is less than the allowable limit. The tube thickness required to achieve the acceptable stress is less than the minimum AP1000 steam generator tube wall thickness, which is reduced to account for assumed general corrosion and erosion rate. Thus, an adequate safety margin is exhibited. The general corrosion rate is based on a conservative weight-loss rate for Alloy 690 TT tubing in flowing, 650°F primary-side reactor coolant fluid. The estimated weight loss, based on testing when equated to a thinning rate and projected over a 60-year design objective, is much less than the assumed corrosion allowance of 3 mils. This leaves the remainder of the general corrosion allowance for thinning on the secondary side.

5.4.2.4 Steam Generator Materials

5.4.2.4.1 Selection and Fabrication of Materials

The pressure boundary materials used in the steam generator are selected and fabricated in accordance with the requirements of Section II and III of the ASME Code. Subsection 5.2.3 contains a general discussion of material specifications. Table 5.2-1 lists the types of materials. Fabrication of reactor coolant pressure boundary materials is also discussed in subsection 5.2.3, particularly in subsections 5.2.3.3 and 5.2.3.4.

Industry-wide corrosion testing and specification development programs have justified the selection of thermally treated Alloy 690, a nickel-chromium-iron alloy (ASME SB-163), for the steam generator tubes. The channel head divider plate is also Alloy 690 (ASME SB-168). The interior surfaces of the reactor coolant channel head, nozzles, and manways are clad with austenitic stainless steel. The primary side of the tubesheet is weld clad with nickel-chromium-iron alloy (ASME SFA-5.14). The tubes are then seal welded to the tubesheet cladding. These fusion welds, comply with Sections III and IX of the ASME Code. The welds are dye-penetrant inspected and leak-tested before each tube is expanded the full depth of the tubesheet bore.

Nickel-chromium-iron alloy in various forms is used for parts where high velocities could otherwise lead to erosion/corrosion. These include the nozzles on the feedwater ring and startup feedwater sparger.

Subsection 5.2.1 discusses authorization for use of ASME Code cases used in material selection. Subsection 1.9.1 discusses the extent of conformance with Regulatory Guides 1.84, Design and Fabrication Code Case Acceptability ASME Section III, Division 1.

During manufacture, the primary and secondary sides of the steam generator are cleaned according to written procedures following the guidance of Regulatory Guide 1.37, Quality

Assurance Requirements for Cleaning of Fluid Systems and Associated Components of Water-Cooled Nuclear Power Plants, and ASME NQA-1 Part II. Onsite cleaning and cleanliness control also follow the guidance of Regulatory Guide 1.37 (discussed in subsection 1.9.1). Cleaning process specifications are discussed in subsection 5.2.3.4.

Subsection 5.2.3.3 discusses the fracture toughness of the materials. Adequate fracture toughness of ferritic materials in the reactor coolant pressure boundary is provided by compliance with 10 CFR 50, Appendix G, Fracture Toughness Requirements, and Paragraph NB-2300 of Section III of the ASME Code.

The heat and lot of tubing material for each steam generator tube is recorded and documented as part of the quality assurance records. Archive samples of each heat and lot of steam generator tubing material are provided for use in future materials testing programs or as inservice inspection calibration standards. A minimum of 7 feet of tubing in the final heat treat condition is supplied.

The exterior of the steam generator surface may be submerged following a postulated actuation of the automatic depressurization system (ADS). During this event, water may be present on the outside of the steam generator without affecting the heat transfer or pressure boundary capabilities of the AP1000 steam generator.

5.4.2.4.2 Steam Generator Design Effects on Materials

Several features in the AP1000 steam generator minimize crevice areas and the deposition of contaminants from the secondary-side flow. Such crevices and deposits could otherwise produce a local environment allowing potential chemical concentration and material corrosion.

The portion of the tube within the tubesheet is expanded to close the crevice between the tube and tubesheet. The length of the expansion is carefully controlled to minimize the potential of an over-expanded condition above the tubesheet and to minimize the extent of unexpanded tube at the top of the tubesheet.

The tube support plates are made of corrosion resistant Type 405 stainless steel alloy. A three-lobed, or trifoil, tube hole design provides flow adjacent to the tube outer surface. This provides high sweeping velocities at the tube and tube support plate intersections. The trifoil tube support plate provides in-plane and out-of-plane strength. The sweeping velocities through the support plate reduce sludge accumulation in the tube-to-tube support crevices. Figure 5.4-3 shows the trifoil broached holes. This support plate design contributes to a high circulation ratio. The increased flow from a high circulation ratio circulation results in increased flow in the interior of the bundle, as well as horizontal velocity across the tubesheet, which reduces the tendency for sludge deposition.

The effect of the total bundle flow on the vibrational stability of the tube bundle has been analyzed, with consideration given to flow-induced excitation frequencies. The maximum unsupported span length of tubing in the U-bend region and the optimal number of anti-vibration bars has been determined, using advanced statistical techniques and vibration modeling. The anti-vibration bars are fabricated from Type 405 stainless steel. The construction minimizes the gaps between the anti-vibration bars and tubes.

Additional measures in the AP1000 steam generator design minimize areas of dryout in the steam generator and sludge accumulations in low-velocity areas. The wrapper design results in significant water velocities across the tubesheet.

A high capacity blowdown system is capable of continuous blowdown of the steam generators at a moderate volume and intermittent flow. The intakes of the blowdown system are at the tube bundle periphery.

A passive sludge collector, which provides a low flow settling zone, is in the upper shell region located among the inner primary moisture separator risers. The sludge collector, or mud drum, provides a location for particulate to settle remote from the tubesheet and tube support plates. The mud drum can be cleaned during a plant shutdown.

Several methods can be used to clean operating steam generators of secondary-side deposits. Sludge lancing is a procedure in which a hydraulic jet inserted through an access opening (handhole) loosens deposits and the loose material is flushed out of the steam generator. A minimum of four 6-inch access ports are provided for sludge lancing, inspection of the tube bundle by portable inspection equipment, and retrieval of loose objects. They are located above the tubesheet 90° apart (two on the tubelane and two at 90° from the tube lane) to provide access to the secondary face of the tubesheet. Also, a minimum of two 4-inch ports located on the secondary shell in line with the tubelane and above the top tube support plate provide access to the U-Bend area. A blowdown hole, located at the bottom of the secondary side drain channel permits continuous blowdown and monitoring of secondary water chemistry. The materials of the secondary side of the steam generator are also compatible with chemical cleaning.

5.4.2.4.3 Compatibility of Steam Generator Tubing with Primary and Secondary Coolants

The industry corrosion tests mentioned in subsection 5.4.2.4.1, subjected the steam generator tubing material thermally treated Alloy 690 ASME SB-163, to simulated steam generator water chemistry. These tests indicated that the loss due to general corrosion over the 60-year operating design objective is small compared to the tube wall thickness. Testing to investigate the susceptibility of heat exchanger construction materials to stress corrosion in caustic and chloride aqueous solutions indicate that Alloy 690 TT provides as good or better corrosion resistance as either Alloy 600 TT or nickel-iron-chromium Alloy 800. Alloy 690 TT also resists general corrosion in severe operating water conditions.

Some operating experience has revealed areas on secondary surfaces where localized corrosion rates were significantly greater than the low general corrosion rates. Both intergranular stress corrosion and tube wall thinning were experienced in localized areas, although not simultaneously at the same location or under the same environmental conditions (water chemistry, sludge composition).

The all volatile treatment (AVT) control program minimizes the possibility of the tube wall thinning phenomenon. Successful AVT operation requires maintenance of low concentrations of impurities in the steam generator water. This reduces the potential for formation of highly concentrated solutions in low-flow zones, which is a precursor of corrosion. By restricting the total alkalinity in the steam generator and prohibiting extended operation with free alkalinity, the all

volatile treatment program minimizes the possibility for intergranular corrosion in localized areas due to excessive levels of free caustic.

Laboratory testing shows that Alloy 690 TT tubing is compatible with the AVT environment. Isothermal corrosion testing in high-purity water shows that Alloy 690 TT exhibiting normal microstructure tested at normal engineering stress levels is not susceptible to intergranular stress corrosion cracking in extended exposure to high-temperature water. These tests also show that no general type corrosion occurred. Field experience with Alloy 690 TT tubing in operation since 1989 has been excellent.

Model boiler tests evaluate similar AVT chemistry guidelines adopted by Westinghouse and EPRI. Conformance to the guidelines enhances tube corrosion performance. The secondary water chemistry guidelines for AP1000 are found in Chapter 10. Action levels for secondary side water chemistry during power operation are given in Table 10.3.5-1. Extensive operating data has been accumulated for all volatile treatment chemistry.

A comprehensive program of steam generator inspections, including the recommendations of Regulatory Guide 1.83, Inservice Inspection of Pressurized Water Reactor Steam Generator Tubes, with the exceptions as stated in subsection 1.9.1, provides for detection of any degradation that might occur in the steam generator tubing.

Included with the standard operating condition water chemistry controls are chemistry controls during zero power (including shutdown, no-load, heatup, cooldown, and refueling operations). The startup feedwater nozzle may be used to supply hydrazine, ammonia, and other chemicals to control secondary pH and oxygen during wet layup. This nozzle, in combination with the blowdown line, can also be used to remove sensible heat from the steam generator during cooldown. Sparging the steam generator with nitrogen through the blowdown line also promotes secondary recirculation at zero power. This recirculation can be used, in conjunction with the addition of cleaning agents into the secondary side, to remove magnetite, copper, or other deposited contaminants. The AP1000 steam generator is also configured for pressure pulse cleaning and water slap methods to remove deposits on the secondary side.

High margins against primary water stress corrosion cracking exist with the specification of thermally treated Alloy 690 tubing. Alloy 690 TT is resistant to primary water stress corrosion cracking over the range of anticipated operating environments. The tubing is thermally treated according to a laboratory-derived treatment process and is generally consistent with industry-accepted and EPRI procedures.

The tube support plates are fabricated of ferritic stainless steel. Laboratory tests show that this material is resistant to corrosion in the AVT environment. If corrosion of ferritic stainless steel were to occur because of the concentration of contaminants, the volume of the corrosion products is essentially equivalent to the volume of the parent material consumed. This would be expected to preclude denting. The support plates are also designed with trifoil tube holes rather than cylindrical holes. The trifoil tube hole (see Figure 5.4-3) design promotes high velocity flow along the tube and is expected to minimize the accumulation of impurities at the support plate location.

5.4.2.5 Steam Generator Inservice Inspection

The steam generator is designed to permit inspection of pressure boundary parts, including individual tubes. Preservice inspection of the AP1000 steam generators is performed according to the ASME Code. Inservice inspection complies with the requirements of 10 CFR 50.55a.

The design includes a number of openings to provide access to both the primary and secondary sides of the steam generator. The openings include four 18-inch diameter manways, one for access to each chamber of the reactor coolant channel head and two in the steam drum for inspection and maintenance of the upper shell internals. In addition, there are a minimum of four 6-inch diameter handholes in the shell, located just above the tubesheet secondary surface are provided. A minimum of two 4-inch diameter inspection openings are provided at each end of the tubelane between the upper tube support plate and the row 1 tubes. Additional access to the tube bundle U-bend is provided through the internal deck plate at the bottom of the primary separators. For proper functioning of the steam generator, some of the deck-plate openings are covered with hatch plates welded in place that are removable by grinding, gouging, or other methods to cut off the welds.

Regulatory Guide 1.83 provides recommendations on the inspection of tubes. The recommendations cover inspection equipment, baseline inspections, tube selection, sampling and frequency of inspection, methods of recording, and required actions based on findings. Any eddy current inspection performed in the manufacturing facility is conducted by personnel qualified to the requirements for inspectors performing inservice inspection of operating units. The manufacturing facility inspection is conducted using the same equipment as, or equipment similar to, that used during inservice inspection of operating units. Exceptions to Regulatory Guide 1.83 are noted in subsection 1.9.1.

The steam generators permit access to tubes for inspection, repair, or plugging, if necessary, per the guidelines described in Regulatory Guide 1.83. Tooling to install mechanical and welded plugs, tube repair sleeves, or effect other repair processes remotely can be delivered robotically. The AP1000 steam generator includes features to enhance robotics inspection of steam generator tubes without manned entry of the channel head. These include a cylindrical section of the channel head, primary manways, and provisions to facilitate the remote installation of nozzle dams. Computer simulation using designs of existing robotically delivered inspection and maintenance equipment verifies that tubes can be accessed. To facilitate tube identification for manual activities, the tube location for a fraction of the tubes is scribed on the tubesheet.

The minimum requirements for inservice inspection of steam generators, including tube repair criteria, are discussed in subsection 5.4.15 considering NRC requirements and industry recommendations. The steam generator tube integrity is verified in accordance with a Steam Generator Tube Surveillance Program. The Steam Generator Tube Surveillance Program is discussed in subsection 5.4.15. Section XI of the ASME Code provides general acceptance criteria for indications of tube degradation in the steam generator.

5.4.2.6 Quality Assurance

The steam generator is constructed to a quality assurance program that meets the requirements of the ASME Code and ASME NQA-1-1994 Edition. Table 5.4-6 outlines the testing included in the steam generator quality assurance program.

The radiographic inspection and acceptance standard comply with the requirements of Section III of the ASME Code per applicable Code Year and Addenda.

Liquid penetrant inspection and acceptance standards comply with the requirements of Section III of the ASME Code per applicable Code Year and Addenda. Liquid penetrant inspection is performed on weld-deposited tubesheet cladding, channel head cladding, divider-plate-to-tubesheet and to channel head weldments, tube-to-tubesheet weldments, and weld-deposit cladding.

Magnetic particle inspection and acceptance standards comply with the requirements of Section III of the ASME Code per applicable Code Year and Addenda. Magnetic particle inspection is performed on the tubesheet forging, channel head forging, nozzle forging, and the following weldments:

- Nozzle to shell (if not integral)
- Support brackets
- Instrument connection (secondary)
- Temporary attachments, after removal
- Accessible pressure retaining welds after hydrostatic test

Ultrasonic inspection and acceptance standards comply with the requirements of Section III of the ASME Code per applicable Code Year and Addenda. Ultrasonic tests are performed on the tubesheet forgings, tubesheet cladding, secondary shells and heads plates and forgings, and nozzle forgings.

The heat transfer tubing is subjected to eddy current testing and ultrasonic examination.

Hydrostatic tests comply with Section III of the ASME Code.

Non-destructive examination of pressure boundary and associated weldments will be performed in accordance with the applicable Code Year and Addenda of ASME Section III, Subsections NB and NC.

5.4.3 Reactor Coolant System Piping

5.4.3.1 Design Bases

The reactor coolant system piping accommodates the system pressures and temperatures attained under all expected modes of plant operation or anticipated system interactions. The piping in the reactor coolant system is AP1000 equipment Class A (ANS Safety Class 1, Quality Group A) (see subsection 3.3.2) and is designed and fabricated according to ASME Code, Section III, Class 1 requirements. Lines with a 3/8-inch or less flow restricting orifice qualify as AP1000 equipment

Class B (ANS Safety Class 2, Quality Group B) and are designed and fabricated with ASME Code, Section III, Class 2 requirements. If one of these lines breaks, the chemical volume control charging pumps are capable of providing makeup flow while maintaining pressurizer water level. Stresses are maintained within the limits of Section III of the ASME Code. Code and material requirements are provided in Section 5.2. Inservice inspection of Class 1 components is discussed in subsection 5.2.4.

Materials of construction are specified to minimize corrosion/erosion and to provide compatibility with the operating environment including the expected radiation level. The welding, cutting, heat treating and other processes used to minimize sensitization of stainless steel are discussed in subsection 5.2.3.

The thickness of reactor coolant system piping satisfies the design requirements of the ASME Code, Section III, Subsection NB. The analysis of piping of nominal pipe size of 6 inches or greater which demonstrates leak-before-break characteristics, as outlined in subsection 3.6.3, does not include loads due to the dynamic effects of pipe rupture. The minimum pipe bend radius is 1.5-nominal pipe diameters, and ovality meets the requirements of the ASME Code.

Butt welds, branch connection nozzle welds, and boss welds are of a full-penetration design. Flanges conform to ANSI B16.5. Socket weld fittings and socket joints conform to ANSI B16.11.

5.4.3.2 Design Description

5.4.3.2.1 Piping Elements

The reactor coolant system piping includes those sections of reactor coolant hot leg and cold leg piping interconnecting the reactor vessel, steam generators, and reactor coolant pumps. It also includes piping connected to the reactor coolant loop piping and primary components. Figure 5.1-5 shows the Piping and Instrumentation Drawing (P&ID) of the reactor coolant system. The boundary of the reactor coolant system includes the second of two isolation or shut off valves and the piping between those valves. A single ASME Code safety valve may also represent the boundary of the reactor coolant system. The connected piping in the reactor coolant system includes the following:

- Chemical and volume control system (CVS) purification return line from the system isolation valve up to a nozzle on the steam generator channel head
- Chemical and volume control system purification line from the branch connection on the pressurizer spray line to the system isolation valve
- Pressurizer spray lines from the reactor coolant cold legs up to the spray nozzle on the pressurizer vessel
- Normal residual heat removal system (RNS) pump suction line from one reactor coolant hot leg up to the designated isolation valve

- Normal residual heat removal system discharge line from the designated check valve to the connection to the core makeup tank return lines to the reactor vessel direct injection nozzle
- Accumulator lines from the designated check valve to the reactor vessel direct injection nozzle
- Passive core cooling system (PXS) lines from the cold legs to the core make-up tanks and back to the reactor vessel direct injection nozzles
- Drain, sample and instrument lines to the designated isolation valve.
- Pressurizer surge line from one reactor coolant loop hot leg to the pressurizer vessel surge nozzle
- Pressurizer spray scoop, reactor coolant temperature element installation boss, and the temperature element well itself
- All branch connection nozzles attached to reactor coolant loops
- Pressure relief lines in the pressurizer safety and relief valve module from nozzles on top of the pressurizer vessel up to and including the pressurizer safety valves
- Automatic depressurization system (ADS) lines from the pressurizer relief lines to the stages 1, 2, and 3 automatic depressurization system valves
- Automatic depressurization system lines from the connection with the hot leg up to the fourth stage valves
- Auxiliary spray line from the isolation valve up to the main pressurizer spray line
- Passive core cooling system lines from the hot leg to the passive residual heat removal heat exchanger, and back to the nozzle on the steam generator channel head
- Vent line from the reactor vessel head to the system isolation valves
- In-containment refueling water storage tank injection lines from the designated valves to the reactor vessel direct injection nozzle

Table 5.4-7 gives principal design data for the reactor coolant piping.

A discussion of the codes used in the fabrication of reactor coolant piping and fittings appears in Section 5.2.

Reactor coolant system piping is fabricated of austenitic stainless steel. The piping is forged seamless without longitudinal or electroslag welds. It complies with the requirements of the ASME Code, Section II (Parts A and C), Section III, and Section IX. The reactor coolant system piping does not contain any cast fittings. Changes in direction are accomplished in most cases

using bent pipe instead of elbows to minimize the number of welds, fittings, and short radius turns.

5.4.3.2.2 Piping Connections

Joints and connections are welded, except for the pressurizer safety valves, the reactor head vent line, miscellaneous vents and drains, and orifice flanges, where flanged joints are used. Fillet welds may be used to connect small instrument lines to socket weld connections. Piping connections for auxiliary systems are above the horizontal centerline of the reactor coolant loop piping, except for the following:

- The residual heat removal pump suction line, which is located at the bottom of a hot leg pipe. This enables the water level in the reactor coolant system to be lowered in the reactor coolant loop pipe while continuing to operate the residual heat removal system, should this be required for maintenance.
- The pressurizer level channel nozzles with a 0.375-inch or less flow restrictor and the hot leg level channel nozzle with a 0.375-inch flow restrictor located in the hot leg piping.
- The sample connection located at 45 degrees below the horizontal centerline of each hot leg.
- The cold leg-narrow range thermowells attached at the horizontal centerline.
- The wide-range thermowell tap and three of the six narrow-range thermowell taps in each hot leg.

5.4.3.2.3 Encroachment into Coolant Flow

Parts encroaching into the primary coolant loop flow path are limited to the following:

- The spray line inlet connections extend into the cold leg piping in the form of a scoop so that the velocity head of the reactor coolant loop flow adds to the spray driving force.
- The narrow-range and wide-range temperature detectors are in resistance temperature detector wells that extend into both the hot and cold legs of the reactor coolant loop piping.

5.4.3.3 Design Evaluation

The loading combinations, stress limits, and analytical methods for the structural evaluation of the reactor coolant system piping and supports for design conditions, normal conditions, anticipated transients, and postulated accident conditions are discussed in subsection 3.9.3. The requirements for dynamic testing and analysis are discussed in subsection 3.9.2. The reactor coolant system design transients for normal operation, anticipated transients and postulated accident conditions are discussed in subsection 3.9.1.

The pressurizer surge line has been specifically designed and instrumented to minimize the potential for thermal stratification that could increase cyclic stresses and fatigue usage. At the connection of the surge line to the hot leg, the surge line is sloped 24 degrees from horizontal. The

connection to the reactor coolant hot leg is in the portion of the loop piping that is at an angle with horizontal and adjacent to the steam generator inlet nozzle. The run between the hot leg and pressurizer continuously slopes up. The surge line has an angle of at least 2.5 degrees to horizontal. The pressurizer surge line is shown in Figure 5.4-4. Changes of direction in the surge line are made using pipe bends instead of elbow fittings.

The surge line temperature is monitored for indication of thermal stratification. The temperature is monitored at three locations using strap-on resistance temperature detectors. One location is on the vertical section of pipe directly under the pressurizer. The other two locations are on the top and bottom of the pipe at the same diameter on a more horizontal section of pipe near the pressurizer.

Temperatures in the spray lines from the cold legs of one loop are measured and indicated. Alarms from these signals actuate to warn the operator of low spray water temperature or to indicate insufficient flow in the spray lines.

5.4.3.4 Material Corrosion/Erosion Evaluation

The pipe material is selected to minimize corrosion in the reactor coolant water chemistry. (See subsection 5.2.3.) A periodic analysis of the coolant chemistry is performed to verify that the reactor coolant water quality meets the specifications. Water quality is maintained to minimize corrosion by using the chemical and volume control system and sampling system, described in Chapter 9.

Contamination of stainless steel and nickel-chromium-iron alloys by copper, low-melting-temperature alloys, mercury, and lead is prohibited during fabrication, installation, and operation.

The austenitic stainless steel surfaces are cleaned to an appropriate halogen limit. The austenitic stainless steel piping is very resistant to erosion due to single-phase fluid flow. The flow rate in the reactor coolant loop piping and branch connections during normal operation and anticipated transients is significantly below the threshold value for erosion due to water for austenitic stainless steel.

The material selection, water chemistry specification, and residual stress in the piping minimize the potential for stress corrosion cracking. (See subsection 5.2.3.) Reactor coolant system piping is stress-relieved subsequent to bending or other fabrication operations which could result in significant residual stress in the pipe. Processes such as welding or heat treating which apply heat to stainless steel are controlled to minimize the potential for sensitization of the stainless steel.

Pressure boundary welds out to the second valve that delineates the reactor coolant system boundary are accessible for inservice examination as required by ASME Code, Section XI, and are fitted with removable insulation. Reactor coolant system piping is seamless and does not have any longitudinal welds.

5.4.3.5 Test and Inspections

The reactor coolant system piping construction is subject to a quality assurance program. The pressure boundary components meet requirements established by the ASME Code and ASME

NQA-1. The testing included in the reactor coolant system piping quality assurance program is outlined in Table 5.4-8.

A transverse tension test conforming with the supplementary requirements S2 of material specification ASME SA-376 applies to each heat of pipe material.

Ultrasonic examination is performed throughout 100 percent of the wall volume of each pipe, fitting, and other forgings according to the applicable requirements of Section III of the ASME Code for reactor coolant system piping. Unacceptable defects are eliminated according to the requirements of the ASME Code. The surfaces of weld areas are smooth enough to permit preservice and inservice non-destructive examination.

The ends of pipe sections and branch ends are machined to provide a smooth weld transition adjacent to the weld.

A liquid penetrant examination is performed on accessible surfaces, including weld surfaces, of each finished pipe and fitting according to the criteria of the ASME Code, Section III. Acceptance standards are according to the applicable requirements of the ASME Code, Section III. Liquid penetrant examinations are done on the area of pipe bends before the bending operation and after the subsequent heat treatment. Since reactor coolant system piping is austenitic stainless steel, magnetic particle testing for surface examination is not an option. Fillet weld joints are examined by liquid penetrant examination method.

Radiographic examination is performed on circumferential butt welds and on branch connection nozzle welds exceeding 4-inch nominal pipe size.

The examination of a weld repair is repeated as required for the original weld. Except, when the defect was originally detected by the liquid penetrant method, and when the repair cavity does not exceed the lesser of 0.38 inch or 10 percent of the thickness, it need be re-examined only by the liquid penetrant method.

5.4.4 Main Steam Line Flow Restriction

5.4.4.1 Design Bases

The outlet nozzle of the steam generator has a flow restrictor that limits steam flow in the unlikely event of a break in the main steam line. A large increase in steam flow results in choked flow in the restrictor which limits further increase in flow. In a steam line qualified for mechanistic pipe break, a sudden rupture resulting in a large increase in steam flow is not expected. The flow restrictor performs the following functions:

- Limits rapid rise in containment pressure
- Limits the rate of heat removal from the reactor to keep the cooldown rate within acceptable limits
- Reduces thrust forces on the main steam line piping

- Limits pressure differentials on internal steam generator components, particularly the tube support plates

The restrictor is configured to minimize the unrecovered pressure loss across the restrictor during normal operation.

5.4.4.2 Design Description

The flow restrictor consists of seven nickel-chromium-iron Alloy 690 (ASME SB-564) venturi inserts which are installed in holes in an integral steam outlet nozzle forging. The inserts are arranged with one venturi at the centerline of the outlet nozzle, and the other six are equally spaced around it. After insertion into the nozzle forging holes, the venturi inserts are welded to the nickel-chromium-iron alloy buttering on the inner surface of the forging.

5.4.4.3 Design Evaluation

The flow restrictor design has been analyzed to determine its structural adequacy. The equivalent throat area of the steam generator outlet is 1.4 square feet. The resultant pressure drop through the restrictor at 100 percent steam flow is approximately 20 psi. This is based on a design flow rate of 7.49×10^6 pounds per hour. Materials of construction of the flow restrictor are in accordance with Code Class 1 Section III of the ASME Code. The material of the inserts is not an ASME Code pressure boundary, nor is it welded to an ASME Code pressure boundary. The method for seismic analysis is dynamic.

5.4.4.4 Inspections

Since the restrictor is not part of the steam system pressure boundary, inservice inspections are not required.

5.4.5 Pressurizer

The pressurizer provides a point in the reactor coolant system where liquid and vapor are maintained in equilibrium under saturated conditions for pressure control of the reactor coolant system during steady-state operations and transients. The pressurizer provides a controlled volume from which level can be measured.

The pressurizer contains the water inventory used to maintain reactor coolant system volume in the event of a minor system leak for a reasonable period without replenishment. The pressurizer surge line connects the pressurizer to one reactor coolant hot leg. This allows continuous coolant volume and pressure adjustments between the reactor coolant system and the pressurizer.

5.4.5.1 Design Bases

The pressurizer is sized to meet following requirements:

- The combined saturated water volume and steam expansion volume is sufficient to provide the desired pressure response to system volume changes.

- The water volume is sufficient to prevent a reactor trip during a step-load increase of 10 percent of full power, with automatic reactor control.

- The water volume is sufficient to prevent uncovering of the heaters following reactor trip and turbine trip, with normal operation of control systems and no failures of nuclear steam supply systems.

- The steam volume is large enough to accommodate the surge resulting from a step load reduction from 100 percent power to house loads without reactor trip, assuming normal operation of control systems.

- The steam volume is large enough to prevent water relief through the safety valves following a complete loss of load with the high water level initiating a reactor trip, without steam dump.

- A low pressurizer pressure engineered safety features actuation signal will not be activated because of a reactor trip and turbine trip, assuming normal operation of control and makeup systems and no failures of the nuclear steam supply systems.

The pressurizer is sized to have sufficient volume to accomplish the preceding requirements without power-operated relief valves. The AP1000 pressurizer has approximately 40 percent more volume than the pressurizers for previous plants with similar power levels. This increased volume provides plant operating flexibility and minimizes challenges to the safety relief valves.

The pressurizer and surge line provide the connection of the reactor coolant system to the safety relief valves and the automatic depressurization system valves. The safety relief valves provide overpressure protection for the reactor coolant system. The automatic depressurization system is provided to reduce reactor coolant system pressure in stages to allow stored water in the in-containment refueling water storage tank to flow into the reactor coolant system to provide cooling.

The pressurizer surge nozzle and the surge line between the pressurizer and one hot leg are sized to maintain the pressure drop between the reactor coolant system and the safety valves within allowable limits during a design discharge flow from the safety valves or the valves of the automatic depressurization system. Requirements for the surge line and piping connecting the pressurizer to safety and automatic depressurization valves is discussed in subsection 5.4.3.

Section 3.2 discusses the AP1000 equipment classification, seismic category and ASME Code classification of the pressurizer. ASME Code and Code Case compliance is discussed in subsection 5.2.1.

The design stress limits, loads, and combined loading conditions are discussed in subsection 3.9.3. Design transients for the components of the reactor coolant system are discussed in subsection 3.9.1. The pressurizer surge nozzle and surge line are designed to withstand the thermal stresses resulting from volume surges occurring during operation. The evaluation of design transients for the pressurizer addresses the potential for thermal stratification at the surge nozzle.

The pressurizer provides a location for high point venting of noncondensable gases from the reactor coolant system. The gas accumulations in the pressurizer can be removed by remote manual operation of the first-stage automatic depressurization system valves following an accident. Degassing of the pressurizer using the automatic depressurization valves will not be required on a routine basis for normal and moderate frequency events. See subsection 5.4.12 for a discussion of high-point vents.

5.4.5.2 Design Description

5.4.5.2.1 Pressurizer

The pressurizer is a vertical, cylindrical vessel having hemispherical top and bottom heads constructed of low alloy steel. Internal surfaces exposed to the reactor coolant are clad austenitic stainless steel. Material specifications are provided in Table 5.2-1 for the pressurizer.

The general configuration of the pressurizer is shown in Figure 5.4-5. The design data for the pressurizer are given in Table 5.4-9. Codes and material requirements are provided in Section 5.2. Nickel-chromium-iron alloys are not used for heater wells or instrument nozzles.

The spray line nozzles and the automatic depressurization and safety valve connections are located in the top head of the pressurizer vessel. Spray flow is modulated by automatically controlled air-operated valves. The spray valves can also be operated manually from the control room. In the bottom head at the connection of the surge line to the surge nozzle a thermal sleeve protects the nozzle from thermal transients.

A retaining screen above the surge nozzle prevents passage of any foreign matter from the pressurizer to the reactor coolant system. Baffles in the lower section of the pressurizer prevent an in-surge of cold water from flowing directly to the steam/water interface. The baffles also assist in mixing the incoming water with the water in the pressurizer. The retaining screen and baffles also act as a diffuser. The baffles also support the heaters to limit vibration.

Electric direct-immersion heaters are installed in vertically oriented heater wells located in the pressurizer bottom head. The heater wells are welded to the bottom head and form part of the pressure boundary. The heaters can be removed for maintenance or replacement.

The heaters are grouped into a control group and backup groups. The heaters in the control group are proportional heaters which are supplied with continuously variable power to match heating needs. The heaters in the backup group are either off or at full power. The power supply to the heaters is a 480-volt 60 Hz. three-phase circuit. Each heater is connected to one leg of a delta-connected circuit and is rated at 480 volts with one-phase current. The capacity of the control and backup groups is defined in Table 5.4-10.

A manway in the upper shell provides access to the internal space of the pressurizer in order to inspect or maintain the spray nozzle. The manway closure is a gasketed cover held in place with threaded fasteners. Periodic planned inspections of the pressurizer interior are not required.

Brackets on the upper shell attach the structure (a ring girder) of the pressurizer safety and relief valve (PSARV) module. The pressurizer safety and relief valve module includes the safety valves

and the first three stages of automatic depressurization system valves. The support brackets on the pressurizer represent the primary vertical load path to the building structure. Sway struts between the ring girder and pressurizer compartment walls also provide lateral support to the upper portion of the pressurizer. See subsection 5.4.10 for additional details.

Four steel columns attach to pads on the lower head to provide vertical support for the vessel. The columns are based at elevation 107'-2". Lateral support for the lower portion of the vessel is provided by sway struts between the columns and compartment walls.

5.4.5.2.2 Instrumentation

Instrument connections are provided in the pressurizer shell to measure important parameters. Eight level taps are provided for four channels of level measurement. Level taps are also used for connection to the pressure measurement instrumentation. Two temperature taps monitor water/steam temperature. A sample tap connection is provided for connection to the sampling system to monitor coolant chemistry. The instrument and sample taps are constructed of stainless steel and designed for a socket weld of the connecting lines to the taps. The sample and instrument taps incorporate an integral flow restrictor with a diameter of 0.38 inch or smaller.

See Chapter 7 for details of the instrumentation associated with pressurizer pressure, level, and temperature.

5.4.5.2.3 Operation

During steady-state operation at 100 percent power, approximately 50 percent of the pressurizer volume is water and 50 percent is steam. Electric immersion heaters in the bottom of the vessel keep the water at saturation temperature. The heaters also maintain a constant operating pressure.

A small continuous spray flow is provided through a manual bypass valve around each power-operated spray valve to minimize the boron concentration difference between the pressurizer liquid and the reactor coolant. This continuous flow also prevents excessive cooling of the spray piping. Proportional heaters in the control group are continuously on during normal operation to compensate for the continuous introduction of cooler spray water and for losses to ambient.

These conditions result in a continuous outsurge in most cases during normal operation and anticipated transients. The outsurge minimizes the potential for thermal stratification in the surge line.

During an outsurge of water from the pressurizer, flashing of water to steam and generation of steam by automatic actuation of the heaters keep the pressure above the low-pressure engineered safety features actuation setpoint. During an in-surge from the reactor coolant system, the spray system (which is fed from two cold legs) condenses steam in the pressurizer. This prevents the pressurizer pressure from reaching the high-pressure reactor trip setpoint. The heaters are energized on high water level during in-surge to heat the subcooled surge water entering the pressurizer from the reactor coolant loop.

During heatup and cooldown of the plant, when the potential for thermal stratification in the pressurizer is the greatest, the pressurizer may be operated with a continuous outsurge of water from the pressurizer. This is achieved by continuous maximum spray flow and energizing of all of the backup pressurizer heater groups. The temperature difference between the pressurizer and hot leg is minimized by maintaining the lowest reactor coolant system pressure possible consistent with operation of a reactor coolant pump. This mode of operation minimizes the frequency and magnitude of thermal shock to the surge line nozzle and lower pressurizer head, and the potential for stratification in the pressurizer and surge line. The design analyses of the pressurizer include consideration of transients on the lower head and shell regions to account for these possible insurge/outsurge events.

The pressurizer is the initial source of water to keep the reactor coolant system full of water in the event of a small loss of coolant. Pressurizer level and pressure measurements indicate if other sources of water, including the chemical volume and control system and passive safety systems, must be used to supply additional reactor coolant.

Power to the pressurizer heaters is blocked when the core makeup tanks are actuated. This action reduces the potential for steam generator overfill for a steam generator tube rupture accident.

5.4.5.3 Design Evaluation

5.4.5.3.1 System Pressure Control

The reactor coolant system pressure is controlled by the pressurizer whenever a steam volume is present in the pressurizer.

A design basis safety limit has been set so that the reactor coolant system pressure does not exceed the maximum transient value based on the design pressure as allowed under the ASME Code, Section III. Evaluation of plant conditions of operation considered for design indicates that this safety limit is not reached. The safety valves provide overpressure protection. See subsection 5.2.2.

During startup and shutdown, the rate of temperature change in the reactor coolant system is controlled automatically by the steam dump system. Heatup rate is controlled by energy input from the reactor coolant pumps and by the modulation of the steam dump valves. Pressurizer heatup rate is controlled by the electrical heaters in the pressurizer.

When the pressurizer is filled with water, i.e., during initial system heatup or near the end of the second phase of plant cooldown, reactor coolant system pressure is controlled by the letdown flowrate.

The AP1000 pressurizer heaters are powered from the 480 V ac system. During loss of offsite power events concurrent with a turbine trip, selected pressurizer heater buses are capable of being powered from the onsite diesel generators via manual alignment. This permits use of the pressurizer for control purposes when power is supplied by the diesel-generators. The power supplied by the diesel-generators is sufficient to establish and maintain natural circulation in hot standby condition in conformance with the requirement of 10 CFR 50.34 (f)(2)(xiii).

If loss of offsite power occurs and onsite power is available, the pressurizer heaters and startup feedwater pumps can operate to provide natural circulation and cooling through the steam generators.

Should the onsite diesel generators not be available during loss of offsite power events, core decay heat is removed from the reactor coolant system using the passive residual heat removal heat exchanger. The decay heat is transferred to the in-containment refueling water storage tank (IRWST) water. The passive core cooling system does not require the use of pressurizer heaters to maintain pressure control. The passive containment cooling system functions to maintain the plant in a safe condition.

NUREG-0737, Action Item II.E.3.1, outlines four requirements for emergency power supply to the pressurizer heaters for purposes of establishing natural circulation in the reactor coolant system during a loss of offsite power. NUREG-0737 does not address scenarios involving natural circulation cooling for a loss of all ac power, which is a design basis for the AP1000. Under these circumstances, cooling is provided by the passive residual heat removal system. Upon a loss of all ac power, the heaters are not available to maintain the pressurizer inventory in a saturated condition. That condition is not needed for the plant to be maintained in a safe condition. On this basis, compliance with the requirements of the action item is not required to provide for the safety of the AP1000. Nevertheless, AP1000 compliance with the intent of these requirements is summarized in the following paragraphs.

The heaters are powered from separate electrical buses for each heater group. Two groups of heaters can be administratively loaded onto the non-Class 1E diesel-generator-backed buses (Figure 8.3.1-1).

Analysis of AP1000 steady-state heat losses indicates that a heater capacity of about 166 kW is sufficient to provide saturated conditions in the pressurizer. Each AP1000 heater group has a capacity greater than 166 kW (see Table 5.4-10). One group alone can maintain control over reactor coolant system pressure and subcooling.

Established administrative procedures are followed for re-energizing groups. Associated actions can be controlled from either the main control room or the shutdown panel. It is not necessary to shed other loads in order to manually load a heater group.

Based on analysis of other pressurizer water reactors, the reactor coolant system sensible heat capacity is such that adequate subcooling can be maintained in the reactor coolant system for four hours without heat input from the pressurizer heaters. Thus, the time required to accomplish connection of the heaters to the emergency buses is consistent with timely initiation of natural circulation conditions.

Since the buses supplying the heaters for the diesel generators are not Class 1E, the 480 V breakers supplying the heaters are not required to be “qualified in accordance with safety-related requirements.”

5.4.5.3.2 Pressurizer Level Control

The normal operating water volume at full-load conditions is approximately 50 percent of the free internal vessel volume. Under part-load conditions the water volume in the pressurizer is reduced proportionally with reductions in plant load to approximately 25 percent of the free internal vessel volume at the zero-power condition.

5.4.5.3.3 Pressure Setpoints

The reactor coolant system design and operating pressure, together with the safety valve setpoints, heater actuation setpoints, pressurizer spray valve setpoints, and protection system pressure setpoints, are listed in Table 5.4-11. When operating in load regulation mode, the pressurizer spray and backup heaters are on continuously. This continuous operation decreases the number of actuations of the backup heaters and spray valves, thereby extending the component lifetimes.

The selected design margin considers core thermal lag, coolant transport times and pressure drops, instrumentation and control response characteristics, and system relief valve characteristics. The design pressure allows for operating transient pressure changes.

The low pressurizer pressure engineered safety features actuation signal does not require a coincident low pressurizer water level signal.

5.4.5.3.4 Pressurizer Spray

Two separate, automatically controlled spray valves with remote manual overrides are used to initiate pressurizer spray.

In parallel with each spray valve is a manual throttle valve. The throttle permits a small, continuous flow through both spray lines to reduce thermal stresses and thermal shock when the spray valves open. Flow through this valve helps to maintain uniform water chemistry and temperature in the pressurizer. Temperature sensors with low temperature alarms are located in each spray line to alert the operator to insufficient bypass flow.

The layout of the common spray line piping routed to the pressurizer forms a water seal that prevents steam buildup back to the control valves. The design spray rate is selected to prevent the pressurizer pressure from reaching the reactor trip setpoint during a step reduction in power level of 10 percent of full load.

The pressurizer spray lines and valves are large enough to provide the required spray flowrate under the driving force of the differential pressure between the surge line connection in the hot leg and the spray line connection in the cold leg. The spray line inlet connections extend into the cold leg piping in the form of a scoop in order to use the velocity head of the reactor coolant loop flow to add to the spray driving force. The spray line also assists in equalizing the boron concentration between the reactor coolant loops and the pressurizer.

A flowpath from the chemical and volume control system to the pressurizer spray line is also provided. This path provides auxiliary spray to the vapor space of the pressurizer during cooldown, hot standby, and hot shutdown when the reactor coolant pumps are not operating. The

pressurizer spray connection and the spray piping can withstand the thermal stresses resulting from the introduction of cold spray water.

5.4.5.4 Tests and Inspections

The pressurizer construction is subject to a quality assurance program. The pressure boundary components meet requirements established by the ASME Code and ASME NQA-1. Table 5.4-12 outlines the testing included in the pressurizer quality assurance program.

The design of the pressurizer permits the inspection program prescribed by the ASME Code, Section XI. To implement the requirements of the ASME Code, Section XI, the following welds, when present, are designed and constructed to present a smooth transition surface between the parent metal and the weld metal. The weld surface is ground smooth for ultrasonic inspection.

- Surge nozzle to the lower head
- Safety and spray nozzles to the upper head
- Nozzle to safe end attachment welds
- The girth full-penetration welds

The liner within the safe end nozzle region extends beyond the weld region to maintain a uniform geometry for ultrasonic inspection.

Peripheral support rings are furnished for the removable insulation modules.

5.4.6 Automatic Depressurization System Valves

The automatic depressurization system (ADS) valves are part of the reactor coolant system and interface with the passive core cooling system (PXS). Twenty valves are divided into four depressurization stages. These stages connect to the reactor coolant system at three different locations. The automatic depressurization system first, second, and third stage valves are included as part of the pressurizer safety and relief valve (PSARV) module and are connected to nozzles on top of the pressurizer. The fourth stage valves connect to the hot leg of each reactor coolant loop. The reactor coolant system P&ID, Figure 5.1-5, shows the arrangement of the valves.

Opening of the automatic depressurization system valves is required for the passive core cooling system to function as required to provide emergency core cooling following postulated accident conditions. Operation of the passive core cooling system, including setpoints for the opening of the automatic depressurization system valves is discussed in Section 6.3.

The first stage valves may also be used, as required following an accident, to remove noncondensable gases from the steam space of the pressurizer. (See subsection 5.4.11.)

5.4.6.1 Design Bases

Subsection 5.4.8 discusses the general design basis, design evaluation, and testing and inspection for reactor coolant system valves, including the automatic depressurization system valves. The automatic depressurization system valves are seismic Category 1, AP1000 equipment Class A components. (See subsection 3.2.2.) The fourth stage valves are interlocked so that they can not be

opened until reactor coolant system pressure has been substantially reduced. The design criteria and bases, functional requirements, mechanical design, and testing and inspection of the passive core cooling system are included in Section 6.3. The design requirements for the passive core cooling system also apply to automatic depressurization valves except where the requirements for reactor coolant system valves are more restrictive.

5.4.6.2 Design Description

The first stage automatic depressurization system valves are motor-operated 4-inch valves. The second and third stage automatic depressurization system valves are motor-operated 8-inch valves. The fourth stage automatic depressurization system valves are 14 inch squib valves arranged in series with normally-open, dc powered, motor-operator valves. See Section 6.3 for a discussion of the sizing of the automatic depressurization system valves.

The control system for the opening of the automatic depressurization system valves, as part of the passive core cooling system, has an appropriate level of diverse and redundant features to minimize the inadvertent opening of the valves.

For each stage 1-3 discharge path a pair of valves are placed in series to minimize the potential for an inadvertent discharge of the automatic depressurization system valves. The fourth stage valves are interlocked so that they cannot be opened until reactor coolant system pressure has been substantially reduced.

The first, second, and third stage valves are located on the pressurizer safety and relief valve module clustered into two groups. Each group has one pair of valves for each stage. The two groups are on different elevations and are separated by a steel plate.

Vacuum breakers are provided in the AP1000 ADS discharge lines to help prevent water hammer following ADS operation. The vacuum breakers limit the pressure reduction that could be caused by steam condensation in the discharge line and thus limit the potential for liquid backflow from the in-containment refueling water storage tank following ADS operation.

A bypass test line is connected to the inlet and outlet of the first, second, and third stage upstream isolation valves. This bypass line can control the differential pressure across the upstream valves during inservice testing. The bypass test solenoid valves do not have a safety-related function to open.

5.4.6.3 Design Verification

The automatic depressurization system valves are verified to meet their safety-related functional requirements by the following:

- Valve equipment qualification
- Pre-operational valve operational verification
- In-service valve operational verification

Automatic depressurization system valve qualification is addressed in subsection 5.4.8.1.2 for the stage 1/2/3 motor operated valves and in subsection 5.4.8.1.3 for the stage 4 squib valves. The

equipment qualification includes type testing which verifies the automatic depressurization system valve operability and flow capacity. Automatic depressurization system valve pre-operational valve operational verification is addressed in subsection 14.2.9.1. Automatic depressurization system valve in-service valve operational verification is addressed in subsection 3.9.6.2.2 and Table 3.9-16.

5.4.6.4 Inspection and Testing Requirements

The requirements for tests and inspections for reactor coolant system valves is found in subsection 5.4.8.4. In addition, tests for the automatic depressurization system valves and piping are conducted during preoperational testing of the passive core cooling system, as discussed in Sections 6.3 and 14.2.

5.4.6.4.1 Flow Testing

Initial verification of the resistance of the automatic depressurization system piping and valves is performed during the plant initial test program. A low pressure flow test and associated analysis is conducted to determine the total piping flow resistance of each automatic depressurization system valve group connected to the pressurizer (i.e. stages 1-3) from the pressurizer through the outlet of the downstream valve. The reactor coolant system shall be at cold conditions with the pressurizer full of water. The normal residual heat removal pumps will be used to provide injection flow into the reactor coolant system, discharging through the ADS valves.

Inspections and associated analysis of the piping flow paths from the discharge of the automatic depressurization system valve groups connected to the pressurizer (i.e., stages 1-3) to the spargers are conducted to verify the line routings are consistent with the line routings used for design flow resistance calculations. The calculated piping flow resistances from the pressurizer through the sparger, with valves of each group open are bounded by the resistances used in the Chapter 15 safety analysis.

Inspection of the piping flow paths from each hot leg through the automatic depressurization stage 4 valves is conducted. The calculated flow resistances with valves in each group open are bounded by the resistances used in the Chapter 15 safety analysis.

5.4.7 Normal Residual Heat Removal System

The normal residual heat removal system (RNS) performs the following major functions:

- **Reactor Coolant System Shutdown Heat Removal** - Remove heat from the core and the reactor coolant system during shutdown operations.
- **Shutdown Purification** - Provide reactor coolant system and refueling cavity purification flow to the chemical and volume control system during refueling operations.
- **In-containment Refueling Water Storage Tank Cooling** - Provide cooling for the in-containment refueling water storage tank.

- **Reactor Coolant System Makeup** - Provide low pressure makeup to the reactor coolant system.
- **Post-Accident Recovery** - Remove heat from the core and the reactor coolant system following successful mitigation of an accident by the passive core cooling system.
- **Low Temperature Overpressure Protection** - Provide low temperature overpressure protection (LTOP) for the reactor coolant system during refueling, startup, and shutdown operations.
- **Long-Term, Post-Accident Containment Inventory Makeup Flowpath** - Provide long-term, post-accident makeup flowpath to the containment inventory.
- **Spent Fuel Pool Cooling** - Provide backup for cooling the spent fuel pool.

5.4.7.1 Design Bases

5.4.7.1.1 Safety Design Bases

The safety-related functions provided by the normal residual heat removal system include containment isolation of normal residual heat removal system lines penetrating containment, preservation of the reactor coolant system pressure boundary and a flow path for long term post-accident makeup to the containment inventory. The containment isolation valves perform the containment isolation function according to the criteria specified in subsection 6.2.3. The system preserves the reactor coolant system pressure boundary according to the criteria specified in subsection 5.4.8.

The normal residual heat removal system piping and components outside containment are an AP1000 Class C, Seismic Category I pressure boundary. This classification recognizes the importance of pressure boundary integrity even though these components have no safety-related functions.

5.4.7.1.2 Nonsafety Design Bases

Subsection 5.4.7 outlines the principal functions of the normal residual heat removal system. The normal residual heat removal system is designed to be reliable. This reliability is achieved by using redundant equipment and a simplified system design. The normal residual heat removal system is not a safety-related system. It is not required to operate to mitigate design basis events.

The normal residual heat removal system is designed for a single nuclear power unit and is not shared between units. The normal residual heat removal system is operated from the main control room.

The normal residual heat removal system provides the capability to cool the spent fuel pool during times when it is not needed for removing heat from the reactor coolant system.

5.4.7.1.2.1 Shutdown Heat Removal

The normal residual heat removal system removes both residual and sensible heat from the core and the reactor coolant system. It reduces the temperature of the reactor coolant system during the second phase of plant cooldown. The first phase of cooldown is accomplished by transferring heat from the reactor coolant system via the steam generators to the main steam system (MSS).

Following cooldown, the normal residual heat removal system removes heat from the core and the reactor coolant system during the plant shutdown, until the plant is started up.

The normal residual heat removal system reduces the temperature of the reactor coolant system from 350° to 125°F within 96 hours after shutdown. The system maintains the reactor coolant temperature at or below 125°F for the plant shutdown. The system performs this function based on the following:

- Operation of the system with both subsystems of normal residual heat removal system pumps and heat exchangers available.
- Initiation of normal residual heat removal system operation at four hours following reactor shutdown, after the first phase of cooldown by the main steam system has reduced the reactor coolant system temperature to less than or equal to 350°F and 450 psig.
- The component cooling water system supply temperature to the normal residual heat removal system heat exchangers is based on maximum normal ambient wet bulb temperature as defined in Chapter 2, Table 2-1. The maximum normal ambient temperature is assumed for shutdown cooling.
- Operation of the system is consistent with reactor coolant system cooldown rate limits and consistent with maintaining the component cooling water below design limits during cooldown.
- Core decay heat generation is based on the decay heat curve for a three-region core having burnups consistent with a 24-month or 18-month refueling schedule and based on the ANSI/ANS-5.1-1994 decay heat curve (Reference 5).
- A failure of an active component during normal cooldown does not preclude the ability to cool down, but lengthens the time required to reach 125°F. Furthermore, if such a single failure occurs while the reactor vessel head is removed, the reactor coolant temperature remains below boiling temperature.
- The system operates at a constant normal residual heat removal flow rate throughout refueling operations. This includes the time when the level in the reactor coolant system is reduced to a midloop level to facilitate draining of the steam generators or removal of a reactor coolant pump. Operation of the system at the minimum level that the reactor coolant system can attain using the normal reactor coolant system draining connections and procedures results in no incipient vortex formation which would cause air entrainment into the pump suction.

- The pump suction line is self-venting with continually upward sloped pipe from the pump suction to the hot leg. This arrangement prevents entrapment of air and minimizes system venting efforts for startup.

- Features are included that permit mid-loop operations to be performed from the main control room.

5.4.7.1.2.2 Shutdown Purification

The normal residual heat removal system provides reactor coolant system flow to the chemical and volume control system during refueling operations. The purification flow rate is consistent with the purification flow rate specified in Table 9.3.6-1.

5.4.7.1.2.3 In-Containment Refueling Water Storage Tank Cooling

The normal residual heat removal system provides cooling for the in-containment refueling water storage tank during operation of the passive residual heat removal heat exchanger or during normal plant operations when required. The system is manually initiated by the operator. The normal residual heat removal system limits the in-containment refueling water storage tank water temperature to less than boiling temperature during extended operation of the passive residual heat removal system and not greater than 120°F during normal operation. The system performs this function based on the following:

- Operation of the system with both subsystems of normal residual heat removal system pumps and heat exchangers available.

- The component cooling water system supply temperature to the normal residual heat removal system heat exchangers is based on an ambient design wet bulb temperature of no greater than 86.1°F (0 percent exceedance). The 86.1°F value is assumed for normal conditions and transients that start at normal conditions.

Since the normal residual heat removal system is not a safety-related system, its operation is not credited in Chapter 15 Accident Analyses.

5.4.7.1.2.4 Low Pressure Reactor Coolant System Makeup and Cooling

The normal residual heat removal system provides low pressure makeup from the cask loading pit to the reactor coolant system. The system is manually initiated by the operator following receipt of an automatic depressurization signal. If the system is available, it provides reactor coolant system makeup once the pressure in the reactor coolant system falls below the shutoff head of the normal residual heat removal system pumps. The system provides makeup from the cask loading pit to the reactor coolant system and provides additional margin for core cooling. The normal residual heat removal system is not required to mitigate design basis accidents, and therefore its operation is not considered in Chapter 15 Accident Analyses.

5.4.7.1.2.5 Low Temperature Overpressure Protection

The normal residual heat removal system provides a low temperature overpressure protection function for the reactor coolant system during refueling, startup, and shutdown operations. The system is designed to limit the reactor coolant system pressure to the lower of either the limits specified in 10 CFR 50, Appendix G, or 110 percent of the normal residual heat removal system design pressure.

5.4.7.1.2.6 Spent Fuel Pool Cooling

The normal residual heat removal system has the capability to supplement or take over the cooling of the spent fuel pool when it is not needed for normal shutdown cooling.

5.4.7.2 System Description

Figure 5.4-6 shows a simplified sketch of the normal residual heat removal system. Figure 5.4-7 shows the piping and instrumentation diagram for the normal residual heat removal system. Table 5.4-13 gives the important system design parameters.

The inside containment portions of the system from the reactor coolant system up to and including the containment isolation valves outside containment are designed for full reactor coolant system pressure. The portion of the system outside containment, including the pumps, valves and heat exchangers, has a design pressure and temperature such that full reactor coolant system pressure is below the ultimate rupture strength of the piping.

The normal residual heat removal system consists of two mechanical trains of equipment. Each train includes one residual heat removal pump and one residual heat removal heat exchanger. The two trains of equipment share a common suction line from the reactor coolant system and a common discharge header. The normal residual heat removal system includes the piping, valves and instrumentation necessary for system operation.

The normal residual heat removal system suction header is connected to a reactor coolant system hot leg with a single step-nozzle connection. The step-nozzle connection is employed to minimize the likelihood of air ingestion into the residual heat removal pumps during reactor coolant system mid-loop operations. The suction header then splits into lines with two parallel sets of two normally closed, motor-operated isolation valves in series. This arrangement allows for normal residual heat removal system operation following a single failure of an isolation valve to open and also allows for normal residual heat removal system isolation following a single failure of an isolation valve to close.

The lines join into a common suction line inside containment. A single line from the inside-containment refueling water storage tank is connected to the suction header before it leaves containment.

Once outside containment, the suction header contains a single normally closed, motor-operated isolation valve. Downstream of the suction header isolation valve, the header branches into two separate lines, one to each pump. Each branch line has a normally open, manual isolation

valve upstream of the residual heat removal pumps. These valves are provided for pump maintenance.

The normal residual heat removal system suction header is continuously sloped from the reactor coolant system hot leg to the pump suction. This eliminates any local high points where air could collect and cause low net positive suction head, pump binding and a loss of residual heat removal capability.

The discharge of each residual heat removal pump is directed to its respective residual heat removal heat exchanger. The outlet of each residual heat removal heat exchanger is routed to the common discharge header, which contains a normally closed, motor-operated isolation valve. For pump protection, a miniflow line with an orifice is included from downstream of the residual heat removal heat exchanger to upstream of the residual heat removal pump suction. This line is sized to provide sufficient pump flow when the pressure in the reactor coolant system is above the residual heat removal pump shutoff head.

Once inside containment, the common discharge header contains a check valve that acts as a containment isolation valve. Downstream of the check valve, the discharge header branches into two lines, one to each passive core cooling system direct vessel injection nozzle. These branch lines each contain a stop check valve and check valve in series that serve as the reactor coolant system pressure boundary. A line to the chemical and volume control system demineralizers branches from one of the direct vessel injection lines. This line is used for shutdown purification of the reactor coolant system. Another line branches from the same direct vessel injection line to the in-containment refueling water storage tank which is used when cooling the tank.

One safety relief valve is located on the normal residual heat removal system suction header inside containment. This valve provides low temperature overpressure protection of the reactor coolant system. Subsection 5.4.9 describes the sizing basis of this valve. Another safety relief valve outside of containment provides protection against excess pressure for the piping and components.

When the normal residual heat removal system is in operation, the water chemistry is the same as that of the reactor coolant. Sampling may be performed using the normal residual heat removal heat exchangers channel head drain connections. Sampling of the reactor coolant system using these connections is available at shutdown. Sampling of the in-containment refueling water storage tank is available during normal plant operation.

5.4.7.2.1 Design Features Addressing Shutdown and Mid-Loop Operations

The following is a summary of the specific AP1000 design features that address Generic Letter (GL) 88-17 regarding mid-loop operations. In addition, these features support improved safety during shutdown.

Loop Piping Offset - As shown in Figure 5.3-6, the reactor coolant system hot legs and cold legs are vertically offset. This permits draining of the steam generators for nozzle dam insertion with hot leg level much higher than traditional designs. The reactor coolant system must be drained to a level which is sufficient to provide a vent path from the pressurizer to the steam generators. This is nominally 80 percent level in the hot leg. This loop piping offset also allows a reactor coolant pump to be replaced without removing a full core.

Step-nozzle Connection - The normal residual heat removal system employs a step-nozzle connection to the reactor coolant system hot leg. The step-nozzle connection has two effects on mid-loop operation. One effect is to substantially lower the RCS hot leg level at which a vortex occurs in the residual heat removal pump suction line due to the lower fluid velocity in the hot leg nozzle. This increases the margin from the nominal mid-loop level to the level where air entrainment into the pump suction begins.

Another effect of the step-nozzle is that, if a vortex should occur, the maximum air entrainment into the pump suction has been shown experimentally to be no greater than 5 percent. This level of air ingestion will make air binding of the pump much less likely.

Normal Residual Heat Removal Throttling During Mid-Loop - The normal residual heat removal pumps are designed to minimize susceptibility to cavitation. Normally, the normal residual heat removal system operates without the need for throttling a residual heat removal control valve when the level in the reactor coolant system is reduced to a mid-loop level. If the reactor coolant system is at saturated conditions and mid-loop level, some throttling of a flow control valve is necessary to maintain adequate net positive suction head.

Self-Venting Suction Line - The residual heat removal pump suction line is sloped continuously upward from the pump to the reactor coolant system hot leg with no local high points. This eliminates potential problems with refilling the pump suction line if a residual heat removal pump is stopped when cavitating due to excessive air entrainment. With the self-venting suction line, the line will refill and the pumps can be immediately restarted once an adequate level in the hot leg is re-established.

Wide Range Pressurizer Level - A nonsafety-related independent pressurizer level transmitter, calibrated for low temperature conditions, provides water level indication during startup, shutdown, and refueling operations in the main control room and at the remote shutdown workstation. The upper level tap is connected to an ADS valve inlet header above the top of the pressurizer. The lower level tap is connected to the bottom of the hot leg. This provides level indication for the entire pressurizer and a continuous reading as the level in the pressurizer decreases to mid-loop levels during shutdown operations.

Hot Leg Level Instrumentation - The AP1000 reactor coolant system contains level instrumentation in each hot leg with indication in the main control room. In addition to the wide-range pressurizer level instrumentation (used during cold plant operation) which provides continuous level indication in the main control room from the normal level in the pressurizer, two narrow-range hot leg level instruments are available. Alarms are provided to alert the operator when the reactor coolant system hot leg level is approaching a low level. The isolation valves in the line used to drain the reactor coolant system close on a low reactor coolant system level during shutdown operations. Operations required during mid-loop are performed by the operator in the main control room. The level monitoring and control features significantly improve the reliability of the AP1000 during mid-loop operations.

Reactor Vessel Outlet Temperature - Reactor coolant system hot leg wide range temperature instruments are provided in each hot leg for normal residual heat removal system operation with normal inventory. The normal residual heat removal temperature instruments, upstream of the heat

exchangers, indicate reactor coolant system hot leg temperature when in reduced inventory conditions. In addition, at least two incore thermocouple channels are available to measure the core exit temperature during midloop residual heat removal operation. These two thermocouple channels are associated with separate electrical divisions.

ADS Valves - The automatic depressurization system first-, second-, and third-stage valves, connected to the top of the pressurizer, are open whenever the core makeup tanks are blocked during shutdown conditions while the reactor vessel upper internals are in place. This provides a vent path to preclude pressurization of the reactor coolant system during shutdown conditions when decay heat removal is lost. This also allows the in-containment refueling water storage tank to automatically provide injection flow if it is actuated on a loss of decay heat removal.

The capability to restore containment integrity during shutdown conditions is provided. The containment equipment hatches are equipped with guide rails that allow reinstallation of the hatches to re-establish containment integrity. The containment design also includes penetrations for temporary cables and hoses needed for shutdown operations.

Procedures direct the operator in the proper conduct of midloop operation and aid in identifying and correcting abnormal conditions that might occur during shutdown operations.

5.4.7.2.2 Design Features Addressing Intersystem LOCA

The AP1000 has addressed the intersystem LOCA section of SECY 90-016 with a number of design features. These design features are:

Codes and Standards/Seismic Protection - The portions of the normal residual heat removal system located outside containment (that serve no active safety functions) are classified as AP1000 Equipment Class C so that the design, manufacture, installation, and inspection of this pressure boundary is in accordance with the following industry codes and standards and regulatory requirements: 10 CFR 50, Appendix B; Regulatory Guide 1.26 Quality Group C; and ASME Boiler and Pressure Vessel Code, Section III, Class 3. The pressure boundary is classified as Seismic Category I.

Increased Design Pressure - The portions of the normal residual heat removal system from the reactor coolant system to the containment isolation valves outside containment are designed to the operating pressure of the reactor coolant system. The portions of the system downstream of the suction line containment isolation valve and upstream of the discharge line containment isolation valve are designed so that its ultimate rupture strength is not less than the operating pressure of the reactor coolant system. Specifically, the piping is designed as schedule 80S, and the flanges, valves, and fittings are specified to be greater than or equal to ANS class 900. The design pressure of the normal residual heat removal system is 900 psi, which is approximately 40 percent of operating reactor coolant system pressure.

Reactor Coolant System Isolation Valve - The AP1000 normal residual heat removal system contains an isolation valve in the pump suction line from the reactor coolant system. This motor-operated containment isolation valve is designed to the reactor coolant system pressure. It

provides an additional barrier between the reactor coolant system and lower pressure portions of the normal residual heat removal system.

Normal Residual Heat Removal System Relief Valve - The inside containment AP1000 normal residual heat removal system relief valve is connected to the residual heat removal pump suction line. This valve is designed to provide low-temperature overpressure protection of the reactor coolant system as described in subsection 5.2.2. It is connected to the high pressure portion of the pump suction line and reduces the risk of overpressurizing the low pressure portions of the system.

Features Preventing Inadvertent Opening of Isolation Valves - The reactor coolant system isolation valves are interlocked to prevent their opening at reactor coolant system pressures above 450 psig. Section 7.6 discusses this interlock. The power to these valves is administratively blocked during normal power operation.

RCS Pressure Indication and High Alarm - The AP1000 Normal residual heat removal system contains an instrumentation channel that indicates pressure in each normal residual heat removal pump suction line. A high pressure alarm is provided in the main control room to alert the operator to a condition of rising RCS pressure that could eventually exceed the design pressure of the normal residual heat removal system.

Closed valves connecting to spent fuel pool - The cross-connecting piping between the normal residual heat removal system and the spent fuel pool cooling system is isolated by normally closed valves.

5.4.7.3 Component Description

The descriptions of the normal residual heat removal system components are provided in the following subsections. Table 5.4-14 lists the key equipment parameters for the normal residual heat removal system components.

5.4.7.3.1 Normal Residual Heat Removal Pumps (MP01 A&B)

Two residual heat removal pumps are provided. These pumps are single stage, vertical in-line, bottom suction centrifugal pumps. They are coupled with a motor shaft driven by an ac powered induction motor.

Each pump is sized to provide the flow required by its respective heat exchanger for removal of its design basis heat load. Redundant pumps and heat exchangers provide sufficient cooling to prevent RCS boiling if one subsystem is inoperative. A continuously open miniflow line is also provided to protect the pump from operation at low flow conditions.

5.4.7.3.2 Normal Residual Heat Removal Heat Exchangers (ME01 A&B)

Two residual heat removal heat exchangers are installed to provide redundant residual heat removal capability. These heat exchangers are vertically mounted, shell and U-tube design. Reactor coolant flow circulates through the stainless steel tubes while component cooling water circulates through the carbon steel shell. The tubes are welded to the tubesheet.

5.4.7.3.3 Normal Residual Heat Removal Valves

The normal residual heat removal system packed valves designated for radioactive service are provided with stem packing designs that provide enhanced resistance to leakage. Leakage to the atmosphere is essentially zero for these valves.

Manual and motor-operated valves have backseats to facilitate repacking and to limit stem leakage when the valves are open. The basic material of construction for valves is stainless steel.

5.4.7.3.3.1 Reactor Coolant System Inner/Outer Isolation Valves (V001 A&B, V002 A&B)

There are two parallel sets of two valves in series for a total of four valves. These valves are normally closed, motor-operated valves and are located inside the containment. These valves form the reactor coolant pressure boundary. They are opened only for normal cooldown after reactor coolant system depressurization to 450 psig. They are controlled from the main control room and fail in the "as-is" position. These valves are protected from inadvertently opening when the reactor coolant system pressure is above 450 psig by an interlock. Power to these valves is administratively blocked during normal power operations.

5.4.7.3.3.2 In-Containment Refueling Water Storage Tank Suction Line Isolation Valve (V023)

There is one motor-operated valve located inside containment in the line from the in-containment refueling water storage tank to the pump suction header. This valve is designed for full reactor coolant system pressure. It also acts as a containment isolation valve.

5.4.7.3.3.3 Residual Heat Removal Isolation Valve (V011)

There is one motor-operated valve in the pump discharge header outside of containment. This valve is designed for full reactor coolant system pressure. It also acts as a containment isolation valve.

5.4.7.3.3.4 In-Containment Refueling Water Storage Tank Return Isolation Valve (V024)

There is one normally closed motor-operated valve located inside containment in the discharge line to the in-containment refueling water storage tank. This valve is aligned for full-flow testing of the residual heat removal pumps or for operations involving cooling of the in-containment refueling water storage tank.

5.4.7.3.3.5 Cask Loading Pit Isolation Valve (V055)

There is one normally closed motor-operated valve in the line between the cask loading pit and the residual heat removal pump suction line. This valve can be opened by the operator to provide low pressure injection from the cask loading pit to the reactor coolant system during an accident.

5.4.7.3.3.6 Normal Residual Heat Removal Pump Miniflow Isolation Valves (V057A&B)

There is one normally open air-operated valve in each of the residual heat removal pump miniflow lines. During plant cooldown the operator can close these valves to increase the circulating flow

rate of the reactor coolant through the residual heat removal heat exchangers to decrease the reactor coolant system cooldown time. These valves automatically open on low flow in the residual heat removal heat exchanger discharge line.

5.4.7.4 System Operation and Performance

Operation of the normal residual heat removal system is described in the following sections. System operations are controlled and monitored from the main control room, including mid-loop operations. The reactor coolant system is equipped with mid-loop level instrumentation with remote readout in the main control room. This instrumentation is used for monitoring mid-loop operations from the main control room.

5.4.7.4.1 Plant Startup

Plant startup includes the operations that bring the reactor plant from a cold shutdown condition to no-load operating temperature and pressure, and subsequently to power operation.

During cold shutdown conditions, both residual heat removal pumps and heat exchangers operate to circulate reactor coolant and remove decay heat. The residual heat removal pumps are switched off when plant startup begins. The normal residual heat removal system remains aligned to the reactor coolant system to maintain a low pressure letdown path to the chemical and volume control system. This alignment provides reactor coolant system purification flow and low temperature over-pressure protection of the reactor coolant system. As the reactor coolant pumps are started, their thermal input begins heating the reactor coolant inventory. Once the pressurizer steam bubble formation is complete, the normal residual heat removal system suction header isolation valve and the discharge header isolation valve are closed and tested for leakage. The valve arrangement is then set for normal operation, as shown in Figure 5.4-6.

5.4.7.4.2 Plant Cooldown

Plant cooldown is the operation that brings the reactor plant from normal operating temperature and pressure to refueling conditions.

The initial phase of plant cooldown consists of reactor coolant cooldown and depressurization. Heat is transferred from the reactor coolant system via the steam generators to the main steam system. Depressurization is accomplished by spraying reactor coolant into the pressurizer, which cools and condenses the pressurizer steam bubble.

When the reactor coolant temperature and pressure have been reduced to 350°F and 450 psig, respectively (approximately four hours after reactor shutdown), the second phase of plant cooldown is initiated with the normal residual heat removal system being placed in service.

Before starting the residual heat removal pumps, the in-containment refueling water storage tank isolation valve is closed. Then the normal residual heat removal system suction header isolation valve and the discharge header isolation valve are opened. When the pressure in the reactor coolant system has been reduced to below 450 psig, the inner/outer isolation valves are opened.

Once the proper valve alignment has been performed and component cooling water flow has been initiated to both residual heat removal heat exchangers, normal residual heat removal system operation may begin. The pumps are started and the cooldown proceeds. The cooldown rate is controlled by throttling the flow through the heat exchanger based on reactor coolant temperature.

This mode of operation continues for the duration of the cooldown until the reactor coolant system temperature is reduced to 140°F and the system is depressurized. The reactor coolant system may then be opened for either maintenance or refueling. Cooldown continues until the reactor coolant system temperature is lowered to 125°F (about 96 hours after reactor shutdown).

During the cooldown operations, the reactor coolant system water level is drained to a "mid-loop" level to facilitate steam generator draining and maintenance activities. For normal refuelings, the level to which the reactor coolant system is drained is that which allows air to be vented into the steam generators from the pressurizer. This level is nominally an 80 percent water level in the hot leg. The design of the AP1000 normal residual heat removal system is such that throttling of the residual heat removal pump flow during mid-loop operations to avoid air-entrainment into the pump suction is not required.

At the appropriate time during the cooldown, the operator lowers the water level in the reactor coolant system by placing the chemical and volume control system letdown control valve into the "refueling draindown" mode. At this time the makeup pumps are turned off; and the letdown flow control valve controls the drain rate to the liquid waste processing system. The drain rate proceeds initially at the maximum drain rate and is substantially reduced once the level in the reactor coolant system is lowered to the top of the hot leg. The letdown flow control valve as well as the letdown line containment isolation valve receives a signal to automatically close once the appropriate level is attained. Alarms actuate in the main control room if the level continues to drop to alert the operator to manually isolate the letdown line.

5.4.7.4.3 Refueling

Both residual heat removal pumps and heat exchangers remain operating during refueling. Water transfers from the in-containment refueling water storage tank to the refueling cavity are performed by the spent fuel pool cooling system (SFS). This function has traditionally been performed by residual heat removal systems. That capability still exists if the need arises. To improve clarity in the refueling cavity and reduce operational radiation exposure, the spent fuel pool cooling system is used to flood the refueling cavity without flooding through the reactor vessel.

As decay heat decreases and as fuel is moved to the spent fuel pool, one residual heat removal pump and heat exchanger may be taken out of service. However, the valves remain aligned should the need arise to start this pump quickly in case of a failure of the operating residual heat removal pump.

5.4.7.4.4 Accident Recovery Operations

Upon actuation of automatic depressurization, the normal residual heat removal system can be employed to provide low-pressure reactor coolant system makeup. Provided that radiation levels

inside containment are below a high radiation value and after resetting the safeguards actuation signal to the valves as necessary, the operator may open the cask loading pit suction valves and the residual heat removal discharge isolation valve and start the residual heat removal pumps. Water is pumped from the cask loading pit to the direct vessel injection lines. Operation of the normal residual heat removal system will not prevent the passive core cooling system from performing its safety functions.

5.4.7.4.5 Spent Fuel Pool Cooling

The normal residual heat removal system has the capability of being connected to supplement or take over the cooling function of the spent fuel pool cooling system. The normally closed valves in the cross-connecting piping are opened. One normal residual heat removal pump is started. Spent fuel pool water is drawn through the pump, passed through a heat exchanger and returned to the pool.

This mode of cooling is available when the normal residual heat removal system is not needed for normal shutdown cooling. The spent fuel pool water flow path between the spent fuel pool and the normal residual heat removal system is independent of the flow path used for spent fuel pool cooling by the spent fuel pool cooling system.

5.4.7.4.6 Fire Leading to MODE 5, Cold Shutdown

In the event of loss of normal component cooling system function where it is desired to transfer to MODE 5, Cold Shutdown, to facilitate maintenance, the fire protection system can provide the source of cooling water for a normal residual heat removal system pump and heat exchanger as described in subsection 9.2.2.4.5.5.

5.4.7.5 Design Evaluation

Since the normal residual heat removal system is connected to the reactor coolant system, portions of the system that create the reactor coolant system pressure boundary are designed according to ANSI/ANS 51.1 (Reference 6) with regards to maintaining the reactor coolant system pressure boundary integrity.

Since the normal residual heat removal system penetrates the containment boundary, the containment penetration lines are designed according to the containment isolation criteria identified in subsection 6.2.3.

Safety-related makeup water can be provided through the normal residual heat removal system for long-term post-accident containment makeup. This makeup is provided through the manual containment isolation test connection valve in the discharge of the normal residual heat removal system.

The normal residual heat removal system components and piping are compatible with the radioactive fluids they contain.

The design of the normal residual heat removal system has been compared with the acceptance criteria set forth in subsection 5.4.7, “Residual Heat Removal System,” Revision 3, of the NRC’s

Standard Review Plan. The specific General Design Criteria identified in the Standard Review Plan section are General Design Criteria 2, 4, 5, 19, and 34. Additionally, positions of Regulatory Guides 1.1, 1.29, and 1.68 were also reviewed to determine the degree of compliance between the AP1000 and the acceptance criteria. Branch Technical Position RSB 5-1 was also reviewed as appropriate.

Discussions of the conformance with Regulatory Guides and Branch Technical Positions are found in Section 1.9. Compliance with General Design Criteria is found Section 3.1.

5.4.7.6 Inspection and Testing Requirements

5.4.7.6.1 Preoperational Inspection and Testing

Preoperational tests are conducted to verify proper operation of the normal residual heat removal system (RNS). The preoperational tests include valve inspection and testing, flow testing, and verification of heat removal capability.

5.4.7.6.1.1 Valve Inspection and Testing

The inspection requirements of the normal residual heat removal system valves that constitute the reactor coolant pressure boundary are consistent with those identified in subsection 5.2.4. The inspection requirements of the normal residual heat removal system valves that isolate the lines penetrating containment are consistent with those identified in Section 6.6.

The low temperature overpressure protection relief valve, RNS-V021, located on the normal residual heat removal system suction relief line, is bench tested with water. Valve set pressure is verified to be less than or equal to the value assumed in the low temperature overpressure protection analysis. Relieving capacity of the valve is certified in accordance with the ASME code, Section III, NC-7000.

5.4.7.6.1.2 Flow Testing

Each installed normal residual heat removal system pump is tested to measure the flow through the normal residual heat removal system heat exchangers when aligned to cool the reactor coolant system. Testing will be performed with the pump suction aligned to the reactor coolant system hot leg and the discharge aligned to the passive core cooling system direct vessel injection lines. Flow will be measured using instrumentation in the pump discharge line. Testing will confirm that each pump provides at least the required flow rate shown in Table 5.4-14. This is the minimum flow rate required to ensure that the normal residual heat removal system can meet its functional requirement of cooling the reactor during shutdown operations.

Each installed normal residual heat removal system pump is also tested to measure the flow when aligned to deliver low pressure makeup to the reactor coolant system. Testing will be performed with the pump suction aligned to the cask loading pit and the discharge aligned to the passive core cooling system direct vessel injection lines. Flow will be measured using instrumentation in the pump discharge line. The reactor coolant system will be at atmospheric pressure for this test. Testing will confirm that each pump provides at least the required flow rate shown in Table 5.4-14. This is the minimum flow rate required to ensure that the normal residual heat

removal system can meet its functional requirement to prevent 4th stage ADS actuation for small breaks.

5.4.7.6.1.3 Heat Removal Capability Analysis

Heat exchanger manufacturer's test results and heat exchanger data will be used to perform an analysis to verify that the heat removal capability of each normal residual heat removal system heat exchanger, as measured by the product of the heat transfer coefficient and the effective heat transfer area, UA, is equal to or greater than the required value shown in Table 5.4-14. This is the minimum value required to ensure that the normal residual heat removal system can meet its functional requirement of cooling the reactor during shutdown operations.

5.4.7.7 Instrumentation Requirements

The normal residual heat removal system contains instrumentation to monitor system performance. System parameters necessary for system operation are monitored in the main control room including the following:

- Residual heat removal flow;
- Residual heat removal heat exchanger inlet and system outlet temperatures; and,
- Residual heat removal pump discharge pressure.

In addition, the reactor coolant system contains instrumentation to control and monitor the operations of the normal residual heat removal system. These include the following:

- Reactor coolant system wide range pressure; and,
- Reactor coolant system hot leg level.

Instrumentation is also provided to enable mid-loop operations to be performed from the main control room.

The motor-operated valves connected to the reactor coolant system hot leg are interlocked to prevent them from opening when reactor coolant system pressure exceeds 450 psig. These valves are also interlocked to prevent their being opened unless the isolation valve from the in-containment refueling water storage tank to the residual heat removal pump suction header is closed. Section 7.6 describes this interlock.

5.4.8 Valves

Valves in the reactor coolant system and safety-related valves in connecting systems provide the primary means for the flow of water into and out of the reactor coolant system. In the following paragraphs the design basis, description, evaluation and testing of ASME Code Class 1, 2 and 3 valves is discussed. This discussion includes safety-related valves not in the reactor coolant system because the valve requirements are independent of the system.

5.4.8.1 Design Bases

Valves within the reactor coolant system and safety-related valves in connected systems are designed, manufactured, and tested to meet the requirements of the ASME Code, Section III. As noted in Section 5.2, valves out to and including the second valve that is normally closed or capable of automatic or remote closure are part of the reactor coolant system. The reactor coolant pressure boundary valves are manufactured to the ASME Code Class 1 requirements. Valves of 1 inch and smaller in lines connected to the reactor coolant system are manufactured to Class 2 requirements when the flow is limited by a flow-limiting orifice.

Containment isolation valves are manufactured to ASME Code, Class 2 requirements. Other AP1000 equipment Class C safety-related valves are manufactured to ASME Code, Class 3 requirements. Safety-related valves in auxiliary systems are manufactured to ASME Code Class 2 and 3 requirements depending on their function and classification as outlined in subsection 3.2.2.

Table 5.4-15 provides design data for the reactor coolant pressure boundary valves. Valves and operators are sized to provide valve operation under the full range of design basis flow and pressure drop conditions, including recovery from potential mispositioning of the valves. Operating modes, normal operating and worst-case differential pressures, fluid temperature ranges, and environmental effects are considered in sizing valves and valve operators. Table 5.4-16 gives the normal and maximum differential pressure expected during opening and closing of motor-operated valves in the reactor coolant pressure boundary. Check valves considered part of the reactor coolant system are located inside the containment.

5.4.8.1.1 Check Valves Design and Qualification

Design basis and required operating conditions for safety-related check valves are established based on design conditions including the required system operating cycles to be experienced by the valve, environmental conditions under which the valve is required to function, and severe transient loadings expected during the life of the valve. The design conditions considered may include water hammer and pipe break transients, sealing and leakage requirements, operating fluid conditions (including flow, velocity, temperature, and temperature gradient), maintenance requirements, time between major refurbishments, corrosion requirements, vibratory loading, planned testing methods, and test frequency, and periods of idle operation. Design conditions may include other requirements identified during plant detail design. The maximum loading resulting from the design conditions and transients are evaluated in accordance with the ASME Code, Section III Class 1 design requirements.

Active safety-related check valves include the capability to verify the movement of each check valve's obturator during inservice testing by observing a direct instrumentation indication of the valve position or by using non-intrusive test methods. This instrumentation provides nonintrusive check valve indication and may be either permanently or temporarily installed.

Check valve model and size selection are based on the systems flow conditions, installed location of the valve with respect to flow disturbance, and orientation of the valve in the piping system. Design features, surface finish, and materials can accommodate provisions for nonintrusive determination of disk position and potential valve degradation over time. Valve internal parts are

designed with self-aligning features for the purpose of assured alignment after each valve opening. Qualification testing provides for the adequacy of the safety-related check valves under design conditions. This testing includes test data from the manufacturer, field test data and empirical test data supported by test or test (such as prototype) of similar valves where similarity is justified by technical data. Sampling size for the qualification test is justified by technical data.

For safety-related active check valves with extended structures functional qualification will be performed to demonstrate by test, by analysis or by a combination thereof, the ability to operate at the safety-related design conditions. This functional qualification will demonstrate the valve operability during and after loads representative of the maximum seismic and vibratory event. Check valve internal parts are analyzed for maximum design basis loading conditions in accordance with the requirements in ASME Code, Section III.

5.4.8.1.2 Motor-Operated Valves Design and Qualification

[*Design basis and required operating conditions are established for active safety-related motor-operated valves. Based on the design conditions the motor-operated valves will have a structural analysis performed to demonstrate their components are within the structural limits at the design conditions. The motor-operated valves are designed for a range of conditions up to the design conditions which includes fluid flow, differential pressure (including line break, if necessary), system pressure and temperature, ambient temperature, operating voltage range and stroke time. The sizing of the motor operators on the valves take into account diagnostic equipment accuracies, changes in output capability for increasing differential pressures and flow and ambient temperature and reduction in motor voltage, control switch repeatability, friction variations and other changes in parameters that could result in an increase in operating loads or a decrease in operator output.*]* Valves that are subjected to large temperature changes during operation and can have water or high pressure fluid trapped in the bonnet cavity are evaluated for pressure locking. Provisions are provided, as required to reduce the susceptibility to bonnet overpressurization, pressure locking, and thermal binding.

[*The motor-operated valves have a functional qualification performed to demonstrate by test, by analysis or by a combination thereof, the ability to operate over a range up to the design conditions. This functional qualification will demonstrate the motor-operated valve capability during and after loads representative of the maximum seismic or vibratory event (as required to perform their intended function), demonstrate the valve sealing capability, demonstrate capability under cold and hot operating conditions, demonstrate capability under maximum pipe end loads and demonstrate flow interruption and functional capability. The testing includes test data provided by the manufacturer, field test data, empirical data supported by testing or analysis of prototype tests of similar motor-operated valves that support the qualification where similarity must be justified by technical data. The qualification must be used for validating the required thrust and torque as applicable to operate the valve and the output capability of the motor operator.*]*

Motor-operated valves are designed to be able to change their position from an improper position (mis-positioned) either prior to or during accidents. The recovery from mis-positioning is considered a nonsafety-related function. The nonsafety-related capability to recover from valve mis-positioning is provided for plant operational availability considerations. Systems with

*NRC Staff approval is required prior to implementing a change in this information; see DCD Introduction Section 3.5.

safety-related functions that contain motor-operated valves are designed to tolerate mis-positioning as a single failure or redundant features are provided to preclude mis-positioning. These features include multiple position indicators and alarms, technical specification surveillance, power lock-out, and confirmatory open or close signals.

Since recovery from mis-positioning is a nonsafety-related function, equipment qualification testing and inservice testing is not required for the recovery from mis-position function.

Provisions are made, where possible, for in-situ testing of motor-operated valves at a range of conditions up to the maximum design basis operating conditions in the safety-related design direction (open or close). Where an alternative to in-situ testing is required, the justification of the alternative method to design condition differential testing is documented as part of the valve test program.

5.4.8.1.3 Other Power-Operated Valves Including Explosively Actuated Valves Design and Qualification

Design basis and required operating conditions are established for power-operated (POV) and explosively actuated valve assemblies with an active safety-related function. Power-operated valve assemblies include pneumatic-hydraulic-, air piston-, and solenoid-operated assemblies. Explosively-actuated valves have the valve disk welded to the valve seat and are actuated by an explosive charge fired by an electrical signal.

[*The power-operated safety related valves will have a structural analysis performed to demonstrate their components are within the structural limits at the design conditions. Power operated valve assemblies and explosively actuated valves are designed to accept the maximum compression, tension, and torsional loads which the assembly is capable of producing in combination with other loads such as pressure, thermal, or externally applied loads. The maximum loading resulting from the design conditions and transients is evaluated in accordance with the ASME Code, Section III Class 1 design requirements. Packing adjustment limits are identified to reduce the potential for stem binding.*

The power-operated valves are designed to operated at design operating conditions which include fluid flow, differential pressure (including pipe break, if necessary), system pressure, fluid temperature, ambient temperature, fluid supply conditions (or electrical power supply), spring force and stroke time requirements. The power operated valves, depending on their design and actuation mode, have the operators sized to account for diagnostic equipment accuracies, changes in output capability for increasing differential pressures and flow, friction variations and changes in other parameters that could result in an increase in operating loads or a decrease in operator output.

The power-operated, safety-related valves have a functional qualification performed to demonstrate by test, by analysis or by a combination thereof, the ability to operate at the design conditions. Qualification testing of each size, type, and model is performed under a range of differential pressures and maximum achievable flow conditions up to the design conditions. This functional qualification will demonstrate the power-operated valves capability during and after loads representative of the maximum seismic or vibratory event (as required to perform their intended function), demonstrate the valve sealing capability, demonstrate capability under cold

and hot operating conditions, demonstrate capability under maximum pipe end loads and demonstrate flow interruption and functional capability. The testing includes test data from the manufacturer, field test data, empirical data supported by test, or analysis of prototype tests of similar power-operated valves that support qualification of the power-operated valve. Similarity must be justified by technical data. Solenoid-operated valves are verified to satisfy the applicable requirements for Class 1E components. Solenoid-operated valves are verified to perform their safety-related design requirements over a range of electrical power supply conditions including minimum and maximum voltage.]*

5.4.8.2 Design Description

The materials of construction are selected to minimize the effects of corrosion and erosion and are compatible with the environment. The valves in contact with reactor coolant fluid shall be constructed of stainless steel materials or alloys acceptable for the fluid chemistry.

Safety-related valves do not have full penetration welds within the valve body walls except that explosive actuated valves may be fabricated using full penetration welds of the valve bodies.

Valves and actuators are furnished as a matched system capable of operating over the entire range of design basis conditions. The function of the valve and operator including switch settings for motor-operated valves are qualified by testing, analysis or a combination thereof.

Valves that have stem packing are constructed with packing material compatible with the system fluid and stem material. Where the design permits, valves greater than 2 inch diameter have live load packing to maintain a compressive packing force. Valves supplied with stem packing are supplied with a backseat which may be utilized to minimize stem leakage. The backseat capability does not rely on system pressure to achieve a satisfactory seal. Valve designs such as main steam isolation valves, safety relief valves, packless valves and small solenoid valves by nature of the design of these valves do not have backseat capability. Motor operated valves are not backseated during normal operation. The backseating of the valve must not compromise the structural integrity of the valve and the backseats are capable of retaining the valve stem against full system pressure and maximum thrust produced by the actuator.

Gate valves at the interface with the reactor coolant system and connected safety-related systems are either of the wedge or parallel disc design and have essentially straight through flow. The wedge design is flex-wedge; solid wedge designs are not used. Gate valves have backseats. Gate valves that are susceptible to overpressurization as the result of the heatup of trapped fluid shall be provided with venting capability to alleviate the issue. The valve shall be of outside screw and yoke design. Gate valves are not used in flow regulation or throttling service.

Globe valves are either T or Y type of either a standard or balanced plug design. Valves that are used for throttling service are designed with a disc or disc/cage assembly that will provide the required flow characteristic. Motor operated and manual valves are of the outside screw and yoke design.

Check valves are typically swing type, but tilt disk, nozzle check, and lift check may be used. Check valves containing radioactive fluid are fabricated of stainless steel. These valves do not

*NRC Staff approval is required prior to implementing a change in this information; see DCD Introduction Section 3.5.

have body penetration other than the inlet, outlet and bonnet. The check hinge is serviced through the bonnet. Operating parts are contained within the body. The disc of swing check valves has limited rotation to provide a change of seating surface and alignment after each valve opening.

5.4.8.3 Design Evaluation

ASME Code, Class 1 valves meet the design requirements of ASME Code, Section III, Article NB-3000. ASME Code, Class 2 valves meet the design requirements of ASME Code, Section III, Article NC-3000. ASME Code Class 3 valves meet the design requirements of ASME Code, Section III, Article ND-3000. The AP1000 equipment Classes A, B, and C valves, which are manufactured to ASME Code Classes 1, 2, and 3 respectively, meet established functional requirements. The functional requirements include operability, differential pressure during opening or closure, and seat leakage. The functional requirements are consistent with the guidelines in Regulatory Guide 1.148 and ANSI N278.1-1975 (Reference 7).

The design transients for the valves including the number and the duration of each type of cycle are identified in subsection 3.9.1.1.

Valves with extended structures have testing or analysis performed to demonstrate that the natural frequency is greater than 33 hz. In addition, a structural analysis is performed to verify the design loading will not effect the intended operation of the valve.

Qualification testing of each power operated valve which includes motor-operated, air operated, hydraulic operated, solenoid operated and explosive actuated valves demonstrates the capability of the operator to operate over the full range of expected plant operating conditions. Qualification testing also demonstrates the closing, opening, and seating capability of the valve against the maximum pressure differential and flow within a specified time over the entire operating range. Requirements for qualification testing of power-operated active valves are based on QME-1 (Reference 8). The testing programs in section 3.10 demonstrate the capability of the valves to operate, as required, during anticipated and postulated plant conditions.

Reactor coolant chemistry parameters are compatible with valve construction materials.

5.4.8.4 Tests and Inspections

The nondestructive examinations for the reactor coolant pressure boundary valves meet the more stringent requirements of the ASME Code, Section III, or ANSI B16.34 (Reference 9). The nondestructive examination required is evaluated for each type and class of valve. The examinations consist of the following:

- **Radiographic Examination** - Classes 1 and 2 valve bodies, bonnets, and discs which of cast material are radiographically examined in accordance with the ASME Code, Section III. The procedure and acceptance standards are according to the requirements for Class 1 in the ASME Code, Section III.

- **Ultrasonic Examination -** Classes 1 and 2 valve bodies, bonnets, and discs and Classes 1, 2, and 3 valve stems of 1 inch nominal diameter or larger fabricated of wrought or forged material are ultrasonically examined. The procedures and acceptance standards are according to the requirements for Class 1 in the ASME Code, Section III.

- **Liquid Penetrant Examination** - Bodies, bonnets, discs, and stems, including machined surfaces on these parts, are liquid-penetrant examined in accordance with the ASME Code, Section III. The procedures and acceptance standards are according to the requirements for Class 1 in the ASME Code, Section III.

Hydrostatic pressure boundary test and seat leakage are performed on the reactor coolant pressure boundary valves. The valves are subjected to the following tests as appropriate following manufacture: hydrostatic pressure boundary test, disc hydrostatic test, backseat leakage test, packing leakage test, stem leakage test, and main seat leakage test. Valves used for containment isolation are subjected to a pneumatic seat leakage test. Each diaphragm actuator assembly is subjected to a pneumatic leakage test.

Preoperational testing is performed on the valves to verify operability during design basis operating conditions. The preoperational testing is described in the following sections. The requirements of NRC Generic Letter 89-10 are used as guidelines to develop the preservice test program for valve operability. Except when test alternatives are justified, design conditions are used for the operability testing.

Subsection 5.2.4 discusses inservice inspection for ASME Code Class 1 valves. Section 6.6 discusses inservice inspection for ASME Code Class 2 and 3 components. Valves are accessible for disassembly and internal visual inspection to the extent practical. Subsection 3.9.6 discusses the inservice testing program for active valves.

5.4.8.5 Preoperational Testing

Results of preoperational testing will be used to demonstrate that the results of testing under in situ or installed conditions can be used to confirm the capacity of the valve to operate under design conditions as discussed in Section 14.4.

5.4.8.5.1 Check Valves

Active check valves are tested in the open and close direction. Testing a check valve confirms the valve operability to move to the position to fulfill the safety-related mission during applicable plant modes. The test shows that the check valve opens in response to flow and closes when the flow is stopped. Operability testing of the valves is described in subsection 3.9.3.2.2. Full-flow testing during applicable plant modes of check valves or sufficient flow to fully open the check valve to demonstrate valve operability under design conditions is permitted in most cases by the system design. Where this testing cannot be accomplished, an alternate method of demonstrating operability is developed, and justified. A demonstration of reverse-flow isolation of the check valves that is that the check valve closes when the flow is stopped is performed using direct means or diagnostics. The testing includes the effects of rapid pump starts and stops as required by expected system operating conditions.

The valves to be tested, the safety-related functions of the valves, and the type of testing to be done to verify the capability of the valves to perform the safety-related functions are outlined in valve inservice test requirements found in subsection 3.9.6 and Table 3.9-16. The valves to be tested, safety-related functions, and test requirements for preoperational testing are the same as outlined in inservice test requirements.

During pre-operational testing the following is verified to demonstrate the acceptability of the functional performance.

- The valves are verified to fully open or fully closed under design flow conditions.
- The disc movement from full open to full close is free.
- The valve leakage when fully closed is within established limits, as applicable.
- The disc is stable in the full open position at the system operating flow, conditions.
- The valve disc position can be verified without disassembly of the valve.
- The valve design features, surface finish and materials can accommodate nonintrusive diagnostic testing methods.
- The testing requirements in the inservice test plan can be accommodated in the piping system design.

5.4.8.5.2 Motor-Operated Valves

[*Active safety-related motor-operated valves are tested to verify that the valves open and close under static and safety-related design conditions. Where the safety-related design conditions cannot be achieved, the testing is performed at the maximum achievable dynamic conditions. During the testing critical parameters needed to determine the required closing and opening loads are measured These parameters include thrust, torque, travel, differential pressure, system pressure, fluid flow, voltage, temperature, operating time and thrust/torque at seating, unwedging and at control switch trip. The data collected during the testing on the parameters is used to determine the required operator loads and output capability for the design operating conditions in conjunction with the diagnostic equipment inaccuracies, load changes for increasing differential pressures and flow and ambient temperature and reduction in motor voltage, control switch repeatability, friction variations and changes in other parameters that could result in an increase in operating loads or decrease in operator output capability. The resulting operating loads including uncertainties are then compared to the structural capabilities of the motor-operated valve.*]* Active safety-related motor-operated valves are tested prior to operation for operability as described in subsection 3.9.3.2.2.

*NRC Staff approval is required prior to implementing a change in this information; see DCD Introduction Section 3.5.

Pre-operational testing and evaluation is used to demonstrate the acceptability of the valves functional performance including the following.

- The valves are verified to open and close as applicable at a range of safety-related conditions up to the design conditions to perform their safety function.
- The control switch settings must be adequate to provide margin for diagnostic accuracy, control switch repeatability, load sensitive behavior and degradation.
- The motor operator capability at degraded voltage must exceed the required operating loads and the loads at the control switch settings including diagnostic equipment inaccuracies, load changes for increasing differential pressures and flow, control switch repeatability, friction variations and other parameters that could result in an increase in operating loads or decrease in operator output capability.
- The maximum operating loads including diagnostic equipment inaccuracies, load changes for increasing differential pressures and flow, control switch repeatability, friction variations and other parameters that could result in an increase in operating loads or decrease in operator output capability are verified not to exceed the allowable structural capability limits of the motor-operated valve components.
- The stroke time measurements during opening and closing must be within the design requirements if stroke time is important to the safety function.
- The remote position indication is verified against the local position indication.
- The valve leakage when fully closed is within established limits, as applicable.

5.4.8.5.3 Power-Operated Valves

[*Active safety related power-operated valve assemblies are tested to verify that the valve opens and closes under static and design conditions. Where the design conditions cannot be achieved, the testing is performed at the maximum achievable dynamic conditions. During the testing, critical parameters needed to determine the required closing and opening loads are measured. These parameters include seat load, torque or thrust, travel, spring rate, differential pressure, system pressure, fluid flow, temperature, power supply, operating time and minimum supply pressure. The data collected during the testing on the parameters is used to determine the required operating loads for the design operating conditions in conjunction with the diagnostic equipment inaccuracies and other parameters that could result in an increase in operating loads or decrease in operator output capability. The resulting operating loads including uncertainties are then compared to the structural capabilities of the power-operated valve.*]*

During pre-operational testing the following are verified to demonstrate the acceptability of the functional performance.

- The valves are verified to open and close as applicable at a range of conditions up to the design conditions to perform its safety function.

*NRC Staff approval is required prior to implementing a change in this information; see DCD Introduction Section 3.5.

- For air-operated valves and hydraulically-operated valves the operator capability at minimum supply pressure, power supply or loss of motive force exceed the required operating loads including diagnostic equipment inaccuracies and other parameters that could result in an increase in operating loads or decrease in operator output capability.

- For solenoid-operated valves the valve must be capable of opening or closing the valve at the minimum power supply.

- For air-operated valves and hydraulically-operated valves the maximum operating loads including diagnostic equipment inaccuracies and other parameters that could result in an increase in operating loads are verified not to exceed the allowable structural capability limits of the power-operated valve components.

- The stroke time measurements during opening and closing must be within the design requirements for safety-related functions.

- The remote position indication is verified against the local position indication.

- The valve leakage when fully closed is within established limits, as applicable.

5.4.9 Reactor Coolant System Pressure Relief Devices

Safety valves connected to the pressurizer provide overpressure protection for the reactor coolant system during power operation. The relief valve on the suction line of the normal residual heat removal system (RNS) provides low temperature overpressure protection consistent with the guidelines of NRC Branch Technical Position RSB 5-2. The following discusses the requirements for the valves. Sizing of the safety valves is discussed in subsection 5.2.2.

Power-operated relief valves are not provided in the AP1000 reactor coolant system. Non-reclosing pressure relief devices are not used for pressure relief on the AP1000 reactor coolant system. Section 10.3 discusses safety valves for the main steam system. The automatic depressurization valves which are also connected to the pressurizer and are the interface with the passive core cooling system, are not pressure relief devices. (See subsection 5.4.6.)

5.4.9.1 Design Bases

The combined capacity of the pressurizer safety valves can accommodate the maximum pressurizer surge resulting from complete loss of load. The safety valve on the suction line of the normal residual heat removal system can accommodate the flow from both makeup pumps with no letdown and a water-solid reactor coolant system during low-temperature modes. Table 5.4-17 gives design parameters for the pressurizer safety valves and the residual heat removal system relief valve.

Use of the pressurizer safety valves and the normal residual heat removal relief valve at elevated temperatures in post-accident environments is not anticipated.

5.4.9.2 Design Description

The pressurizer safety valves and the normal residual heat removal system relief valve are spring loaded, self-actuated by direct fluid pressure, and have backpressure compensation features. These valves are designed to reclose and prevent further flow of fluid after normal conditions have been restored. The pressurizer safety valves are of the totally enclosed pop type. The normal residual heat removal relief valve is designed for water relief.

The pressurizer safety valves are incorporated in the pressurizer safety and relief valve (PSARV) module, which provides the connection to the pressurizer nozzles. The routing of pipe between the pressurizer and the safety valves does not include a loop seal. Any condensation of steam in the connecting pipe up to the valve rains back to the pressurizer. Condensate does not collect as a slug of water to be discharged during the initial opening of the valve. The discharge of the safety valve is routed through a rupture disk to containment atmosphere. The rupture disk is provided to contain leakage past the valve, is designed for a substantially lower set pressure than the safety valve set pressure, and does not function as a relief device. The reactor coolant system Piping and Instrumentation Drawing (Figure 5.1-5) shows the arrangement of the safety valves.

The relief valve in the normal residual heat removal system is located between the suction line of the pump and the valve that isolates the residual heat removal system from the reactor coolant system. The discharge from that valve is directed to the containment atmosphere. Subsection 5.4.7 discusses the residual heat removal system. Figure 5.4-6 shows a simplified sketch of the normal residual heat removal system.

In accordance with the requirements of 10 CFR 50.34(f)(2)(xi), positive position indication is provided for the pressurizer safety valves and the normal residual heat removal system relief valve, which provide overpressure protection for the reactor coolant pressure boundary.

Temperatures in the safety valve discharge lines are measured, and an indication and a high temperature alarm are provided in the control room. An increase in a discharge line temperature is an indication of leakage or relief through the associated valve. Leakage past the pressurizer safety valve during normal operation is collected and directed to the reactor coolant drain tank. Section 7.5 discusses the functional requirements for the instrumentation required to monitor the safety valves.

5.4.9.3 Design Evaluation

The pressurizer safety valves prevent reactor coolant system pressure from exceeding 110 percent of system design pressure, in compliance with the ASME Code, Section III. The relief valve on the suction line of the normal residual heat removal system protects that system from exceeding 110 percent of the design pressure of the system and from exceeding the pressure-temperature limits determined from ASME Code, Appendix G, analyses.

The reactor coolant system pressure transients are described in subsection 15.2.3 and are the basis for the ASME Code Overpressure Protection Report. In the analysis of overpressure events, the pressurizer safety valves are assumed to actuate at 2500 psia. The safety valve flowrate assumed is based on full flow at 2575 psia, assuming 3 percent accumulation.

In certain design basis events described in Chapter 15, the pressurizer safety valves are predicted to operate with very low flow rates. For these events, the reactor coolant system pressure is slowly increasing as a result of the mismatch between the decay heat removal rate from the passive residual heat removal heat exchanger and the core decay heat. This slow pressurization of the reactor coolant system results in a small amount of steam flow through the safety valves. Under these conditions, the safety valves do not fully open and would not experience significant cycling. Operation of the safety valves under these conditions could result in small leakage from the valve (much less than the capacity of the normal makeup system), but does not impair the valve overpressure protection capability.

The relief valve on the normal residual heat removal system has an accumulation of 10 percent of the set pressure. The set pressure is the lower of the pressure based on the design pressure of the residual heat removal system and the pressure based on the reactor vessel low temperature pressure limit. The pressure limit determined based on the design pressure includes the effect of the pressure rise across the pump. The set pressure in Table 5.4-17 is based on the reactor vessel low temperature pressure limit. The lowest permissible set pressure is based on the required net positive suction head for the reactor coolant pump.

5.4.9.4 Tests and Inspections

The safety and relief valves are the subject of a variety of tests to validate the design and to verify pressure boundary and functional integrity. For valves that are required to function during a Service Level D condition, static deflection tests are performed to demonstrate operability. Section 3.10 describes these tests.

Safety valves similar to those connected to the pressurizer have been tested within the Electric Power Research Institute (EPRI) safety and relief valve test program. Capacity data for the specific AP1000 safety valve size has been correlated with the EPRI test data to demonstrate that the valve is adequate for steam flow and water flow, even though water flow is not anticipated through the pressurizer safety valves. The completion of this program addresses the requirements of 10 CFR 50.34(f)(2)(x) as related to reactor coolant system relief and safety valve testing. The normal residual heat removal system relief valve is designed for water relief and is not a reactor coolant system pressure relief device since it has a set pressure less than reactor coolant system design pressure. Therefore, the valve selected for the normal residual heat removal system relief valve is independent from the Electric Power Research Institute safety and relief valve test program.

Reactor coolant system pressure relief devices are subjected to preservice and inservice hydrostatic tests, seat leakage tests, operational tests, and inspections, as required. The preservice and inservice inspection and testing programs for valves are described in subsections 3.9.6 and 5.2.4 and Section 6.6. The test program for the safety valves complies with the requirements of ASME Appendix I of the OM Code.

The pressure boundary portion of the valves are required to be inservice inspected according to the rules of Section XI of the ASME Code. There are no full-penetration welds within the valve body walls. Valves are accessible for disassembly and internal visual inspection.

Type testing of the pressurizer safety valves is performed to verify that the pressurizer safety valves operate with low flow at pressures near the valve set pressure. Type tests are performed to correlate the leakage through the safety valves as a function of inlet pressure, at pressures near the valve set pressure. This testing is performed to verify that the safety valves operate in a stable manner at low flow rates. The testing correlates leakage through the valve as a function of inlet pressure and demonstrates that the leakage through the safety valves at set pressure conditions will be greater than or equal to that modeled in the accident analyses. The testing demonstrates that the valves leak at a flow rate of at least 0.35 lbm/sec at a pressure below the valve full-open pressure. The valve full-open pressure is the pressure at which the safety valve opens with significant blowdown flow. The duration of the testing need not duplicate the times indicated in the accident analysis results but should last for a sufficient time to demonstrate stable valve operation. Stable valve performance without excessive valve cycling or chattering for a 15 minute time duration is sufficient. Following this testing, the valve integrity is demonstrated, and the valve leakage is required to be less than the makeup capability of the chemical and volume control system makeup pumps.

5.4.10 Component Supports

5.4.10.1 Design Bases

Component supports provide deadweight support for the piping and equipment, allow lateral thermal movement of the loop during plant operation, and restrain the loops and components during accident and seismic conditions. Subsection 3.9.3 discusses the loading combinations and design stress limits. Support design is according to the ASME Code, Section III, Subsection NF.

The design provides for the integrity of the reactor coolant pressure boundary for normal, seismic, and accident conditions. The design also maintains the piping stresses less than ASME Code limits and less than the limits required to support mechanistic pipe break discussed in subsection 3.6.3.

Section 3.9 presents the results of piping and supports stress evaluations. The loads associated with the dynamic effects of postulated pipe rupture for pipes 6" and larger, which satisfied the requirements for mechanistic pipe break, are not included. See subsection 3.6.3.

The edition of the ASME code, Section III, subsection NF, which is used as the baseline requirement, address the guidance of Regulatory Guides 1.124 and 1.130. The plant design is in conformance with these requirements of the ASME Code. Conformance with Regulatory Guides 1.124 and 1.130 is discussed in detail in Section 1.9. The embedded portions of the component supports are designed according to AISC N690 and ACI 349, as discussed in subsection 3.8.3.

5.4.10.2 Design Description

The support structures are welded, structural steel sections. Linear structures (tension and compression struts, columns, and beams) are used except for the reactor vessel supports, which are plate-and-shell-type structures. Attachments to the supported equipment are either integral (welded to the component) or non-integral (pinned to, bolted to, or borne against the components).

The supports-to-concrete attachments are either brackets welded to heavy embedded plates or anchor bolts or are embedded fabricated assemblies.

The supports permit thermal growth of the supported systems but restrain vertical and lateral movement resulting from seismic and pipe-break loadings. This is accomplished by using pinned ends in the vertical support columns, girders, bumper pedestals, and hydraulic snubbers, and lateral struts.

Because of manufacturing and construction tolerances, ample adjustment for the support structures provides proper erection alignment and fit-up. This is accomplished by shimming or grouting at the supports-to-concrete interface and by shimming at the supports-to-equipment interface.

The supports for the various components are described in the following paragraphs.

5.4.10.2.1 Reactor Pressure Vessel

The reactor vessel supports consist of four individual, air-cooled steel box structures located beneath the inlet nozzles (See Figure 3.8.3-4). The boxes are air-cooled to achieve a concrete design temperature of 200°F. To reduce heat transfer from the nozzle to the concrete, cooled air is baffled vertically through the support, and the heated air is vented at the top.

Vertical and horizontal loads are transmitted from the reactor vessel nozzle pad to the box structure through an integral recessed "pocket" at the top of the box. The nozzle pad bears on permanently lubricated wear plates that allow radial thermal movements of the nozzle with minimal friction resistance to the movement. The vessel support boxes transfer loads from the reactor pressure vessel to vertical and horizontal embedments in the primary shield wall concrete.

5.4.10.2.2 Steam Generator

As shown in Figure 3.8.3-5, each steam generator support consists of the following:

Vertical Support

The vertical support consists of a single vertical column extending from the steam generator compartment floor to the bottom of each steam generator channel head. The column is constructed of a heavy wide flange section, and is pinned at both ends to permit thermal movement of each steam generator during plant heatup and cooldown. The column is located so that it allows full access to the steam generator for routine maintenance activities. It is located far enough from the reactor coolant pump motors to permit pump maintenance and inservice inspection.

Lower Lateral Support

The lower horizontal support is located at the bottom of the channel head. It consists of a tension/compression strut oriented nearly perpendicular to the hot leg. The strut is pinned at both the wall bracket and the steam generator channel head to permit movement of the steam generator during plant heatup and cooldown.

Upper Lateral Support

The upper horizontal support in the direction of the hot leg is located on the upper shell just above the transition cone. It consists of two large hydraulic snubbers oriented parallel with the hot leg centerline. One snubber is mounted on each side of the generator on top of the steam generator compartment wall. The hydraulic snubbers are valved to permit relatively unrestricted steam generator movement during thermal transient conditions, and to "lock up" and act as a rigid strut under dynamic loads.

The upper steam generator horizontal support in the direction normal to the hot leg is located on the lower shell just below the transition cone. It consists of two rigid struts oriented perpendicular to the hot leg. The two rigid struts are mounted on the steam generator compartment wall at the elevation of the operating deck. The steam generator loads are transferred to the struts and snubbers through trunnions on the generator shell.

5.4.10.2.3 Reactor Coolant Pump

The reactor coolant pumps are supported entirely by the steam generators; consequently, there are no reactor coolant pump supports.

5.4.10.2.4 Pressurizer

The supports for the pressurizer, as shown in Figure 3.8.3-6, consist of the following:

- Four steel columns attached to the lower head to provide vertical support for the pressurizer. Struts connected to the lower head and surrounding walls provide lateral support.

- The upper lateral support consists of a box-type ring girder that surrounds the pressurizer. The support connects to the corners of the pressurizer cubicle walls with eight standard sway struts. The girder rests on and is supported vertically by the pressurizer valve support brackets. The pressurizer upper support also supports the pressurizer safety relief piping and valve module, in addition to providing lateral support to the pressurizer.

5.4.10.2.5 Control Rod Drive Mechanism Supports

The support for the control rod drive mechanism is provided by the integrated head package, as described in subsection 3.9.7.

5.4.10.3 Design Evaluation

An evaluation verifies the design adequacy and structural integrity of the reactor coolant loop and the primary equipment supports system. This evaluation compares the analytical results with established criteria for acceptability. Structural analyses demonstrate design adequacy for safety and reliability of the plant in case of a seismic disturbance, and/or loss of coolant accident conditions. Loads that the system is expected to encounter during its lifetime (thermal, weight, and pressure) are applied, and stresses are compared to allowable values. Subsection 3.9.3 discusses the modeling and analysis methods.

5.4.10.4 Tests and Inspections

Nondestructive examinations are performed according to the procedures of the ASME Code, Section V, except as modified by the ASME Code, Section III, Subsection NF.

5.4.11 Pressurizer Relief Discharge

The AP1000 does not have a pressurizer relief discharge system. The AP1000 has neither power operated pressurizer relief valves nor a pressurizer relief discharge tank. Some of the functions provided by the pressurizer relief discharge system in previous nuclear power plants are provided by portions of other systems in the AP1000.

The safety valves connected to the top of the pressurizer provide for overpressure protection of the reactor coolant system. First-, second-, and third-stage automatic depressurization system valves provide for depressurization of the reactor coolant system and venting of noncondensable gases in the pressurizer following an accident. These functions are discussed in subsections 5.2.2, 5.4.12, and in Section 6.3. The AP1000 does not have power operated relief valves connected to the pressurizer.

The discharge of the safety valves is directed through a rupture disk to containment atmosphere.

The discharge of the first-, second-, and third-stage automatic depressurization system valves is directed to the in-containment refueling water storage tank. For the automatic depressurization system valves, the following discussion considers only the gas venting function. Only the first stage automatic depressurization valves are used to vent non-condensible gases following an accident. The sizing considerations and design basis for the in-containment refueling water storage tank for the depressurization function are discussed throughout Section 6.3. The provisions to minimize the differential pressure between the containment atmosphere and the interior of the in-containment refueling water storage tank are also discussed in subsection 6.3.2.

The safety valve on the normal residual heat removal system, which provides low temperature overpressure protection, discharges into the containment atmosphere. See subsection 5.4.7 for a discussion of the connections to and location of the safety valve in the normal residual heat removal system.

5.4.11.1 Design Bases

The containment has the capability to absorb the pressure increase and heat load resulting from the discharge of the safety valves to containment atmosphere. The in-containment refueling water storage tank has the capability to absorb the pressure increase and heat load from the discharge, including the water seal, steam and gases, from a first-stage automatic depressurization system valve when used to vent noncondensable gases from the pressurizer following an accident. The venting of noncondensable gases from the pressurizer following an accident is not a safety-related function.

5.4.11.2 System Description

Each safety valve discharge is directed to a rupture disk at the end of the discharge piping. A small pipe is connected to the discharge piping to drain away condensed steam leaking past the safety valve. The discharge is directed away from any safety related equipment, structures, or supports that could be damaged to the extent that emergency plant shutdown is prevented by such a discharge.

The discharge from each of two groups of automatic depressurization system valves is connected to a separate sparger below the water level in the in-containment refueling water storage tank. The piping and instrumentation diagram for the connection between the automatic depressurization system valves and the in-containment refueling water storage tank is shown in Figure 6.3-2. The in-containment refueling water storage tank is a stainless steel lined compartment integrated into the containment interior structure. The discharge of water, steam, and gases from the first-stage automatic depressurization system valves when used to vent noncondensable gases does not result in pressure in excess of the in-containment refueling water storage tank design pressure. Additionally, vents on the top of the tank protect the tank from overpressure, as described in subsection 6.3.2.

Overflow provisions prevent overfilling of the tank. The overflow is directed into the refueling cavity. The in-containment refueling water storage tank does not have a cover gas and does not require a connection to the waste gas processing system. The normal residual heat removal system provides nonsafety-related cooling of the in-containment refueling water storage tank.

5.4.11.3 Safety Evaluation

The design of the control for the reactor coolant system and the volume of the pressurizer is such that a discharge from the safety valves is not expected. The containment design pressure, which is based on loss of coolant accident considerations, is greatly in excess of the pressure that would result from the discharge of a pressurizer safety valve. The heat load resulting from a discharge of a pressurizer safety valve is considerably less than the capacity of the passive containment cooling system or the fan coolers. See Section 6.2.

Venting of noncondensable gases, including entrained steam and water from the loop seals in the lines to the automatic depressurizations system valves, from the pressurizer into spargers below the water line in the in-containment refueling water storage tank does not result in a significant increase in the pressure or water temperature. The in-containment refueling water storage tank is not susceptible to vacuum conditions resulting from the cooling of hot water in the tank, as described in subsection 6.3.2. The in-containment refueling water storage tank has capacity in excess of that required for venting of noncondensable gases from the pressurizer following an accident.

5.4.11.4 Instrumentation Requirements

The instrumentation for the safety valve discharge pipe, containment, and in-containment refueling water storage tank are discussed in subsections 5.2.5, 5.4.9, and in Sections 6.2 and 6.3, respectively. Separate instrumentation for the monitoring of the discharge of noncondensable gases is not required.

5.4.11.5 Inspection and Testing Requirements

Sections 6.2 and 6.3 discuss the requirements for inspection and testing of the containment and in-containment refueling water storage tank, including operational testing of the spargers. Separate testing is not required for the noncondensable gas venting function.

5.4.12 Reactor Coolant System High Point Vents

The requirements for high point vents are provided for the AP1000 by the reactor vessel head vent valves and the automatic depressurization system valves. The primary function of the reactor vessel head vent is for use during plant startup to properly fill the reactor coolant system and vessel head. Both reactor vessel head vent valves and the automatic depressurization system valves may be activated and controlled from the main control room. The AP1000 does not require use of a reactor vessel head vent to provide safety-related core cooling following a postulated accident.

The reactor vessel head vent valves (Figure 5.4-8) can remove noncondensable gases or steam from the reactor vessel head to mitigate a possible condition of inadequate core cooling or impaired natural circulation through the steam generators resulting from the accumulation of noncondensable gases in the reactor coolant system. The design of the reactor vessel head vent system is in accordance with the requirements of 10 CFR 50.34 (f)(2)(vi).

The reactor vessel head vent valves can be operated from the main control room to provide an emergency letdown path which is used to prevent pressurizer overfill following long-term loss of heat sink events. An orifice is provided downstream of each set of head vent valves to limit the emergency letdown flow rate.

The first stage valves of the automatic depressurization system are attached to the pressurizer and provide the capability of removing noncondensable gases from the pressurizer steam space following an accident. Venting of noncondensable gases from the pressurizer steam space is not required to provide safety-related core cooling following a postulated accident. Gas accumulations are removed by remote manual operation of the first stage automatic depressurization system valves.

The discharge of the automatic depressurization system valves is directed to the in-containment refueling water storage tank. Subsection 5.4.6 and Section 6.3 discuss the automatic depressurization system valves and discharge system.

The passive residual heat removal heat exchanger piping and the core makeup tank inlet piping in the passive core cooling system include high point vents that provide the capability of removing noncondensable gases that could interfere with heat exchanger or core makeup tank operation. These gases are normally expected to accumulate when the reactor coolant system is refilled and pressurized following refueling shutdown. Any noncondensable gases that collect in these high points can be manually vented.

The discharge of the passive residual heat removal heat exchanger high point vent is directed to the in-containment refueling water storage tank. The discharge of the core makeup tank high point

vent is directed to the reactor coolant drain tank. Section 6.3 discusses the passive residual heat removal heat exchanger and venting capability, which is part of the passive core cooling system.

5.4.12.1 Design Bases

The reactor vessel head vent arrangement is designed to remove noncondensable gases or steam from the reactor coolant system via remote manual operations from the main control room through a pair of valves. The system discharges to the in-containment refueling water storage tank (IRWST).

The reactor vessel head vent system is designed to provide an emergency letdown path that can be used to prevent long-term pressurizer overfill following loss of heat sink events. The reactor vessel head vent is designed to limit the emergency letdown flow rate to within the capabilities of the normal makeup system. The reactor vessel head vent system can also vent noncondensable gases from the reactor head in case of a severe accident.

The system vents the reactor vessel head by using only safety-related equipment. The reactor vessel head vent system satisfies applicable requirements and industry standards, including ASME Code classifications, safety classifications, single-failure criteria, and environmental qualification.

The piping and equipment from the vessel head vent up to and including the second isolation valve are designed and fabricated according to ASME Codes Section III, Class 1 requirements. The remainder of the piping and equipment are design and fabricated in accordance with ASME Code, Section III, Class 3 requirements.

The supports and support structures conform with the applicable requirements of the ASME Code.

The Class 1 piping used for the reactor vessel head vent is 1-inch schedule 160. In accordance with ASME Section III it is analyzed following the procedures of NC-3600 for Class 2 piping.

The piping stresses meet the requirements of ASME Code, Section III, NC-3600, with a design temperature of 650°F and a design pressure of 2485 psig.

The automatic depressurization system functions as a part of the passive core cooling system. The first stage automatic depressurization system valves are connected to the pressurizer. The valves are designed, constructed, and inspected to ASME Code Class 1 and seismic Category I requirements. Subsection 5.4.6 and Section 6.3 discuss the design bases for the automatic depressurization system and automatic depressurization system valves.

The primary function of the passive residual heat removal heat exchanger and core makeup tank high point vents is to prevent accumulation of noncondensable gases from the reactor coolant system that could interfere with operation of the passive core cooling system. Section 6.3 discusses the design bases for the passive residual heat removal heat exchanger, the core makeup tanks, and their vent lines.

5.4.12.2 System Description

The reactor vessel head vent arrangement consists of two flow paths, each with redundant isolation valves. Orifices are located downstream of each set of head vent isolation valves to limit the reactor vessel head vent flow rate. Table 5.4-18 lists the equipment design parameters. The reactor vessel head vent arrangement is shown on the reactor coolant system piping and instrumentation diagram (Figure 5.1-5).

The head vent arrangement consists of two parallel paths of two 1-inch, open/close, solenoid-operated isolation valves connected to a 1-inch vent pipe located near the center of the reactor vessel head. The system design with two valves in series in each flow path minimizes the possibility of reactor coolant pressure boundary leakage. The solenoid-operated isolation valves are powered by the safety-related Class 1E DC and UPS system. The solenoid-operated isolation valves are fail-closed, normally closed valves. The valves are included in the valve operability program and are qualified to IEEE-323, IEEE-344, and IEEE-382.

The vent system piping is supported such that the resulting loads and stresses on the piping and on the vent connection to the vessel head are acceptable.

The automatic depressurization system valves are included as part of the pressurizer safety and relief valve module attached to the top of the pressurizer and are connected to the pressurizer nozzles. The automatic depressurization system includes a group of valves attached to the reactor coolant system hot leg that are not used to vent noncondensable gases. The pressurizer safety and relief valve module is supported by an attachment to the top of the pressurizer and provides support for the automatic depressurization system valves. The automatic depressurization system valves are active valves required to provide safe shutdown or to mitigate the consequences of postulated accidents. Subsection 5.4.6 discusses the function control and power requirements for the automatic depressurization system valves.

5.4.12.3 Safety Evaluation

The reactor vessel head vent system is designed so that a single failure of the remotely operated vent valves, power supply, or control system does not prevent isolation of the vent path. The two isolation valves in the active flow path provide a redundant method of isolating the venting system. With two valves in series, the failure of any one valve does not inadvertently open a vent path or prevent isolation of a flow path. The DCD Chapter 15 accident analysis and supporting analyses are performed consistent with the reactor vessel head vent system design parameters provided in Table 5.4-18.

The reactor vessel head vent system has two normally de-energized valves in series in each flow path. This arrangement eliminates the possibility of opening a flow path due to the spurious movement of one valve.

A break of the reactor vessel head vent system line would result in a small loss of coolant accident of not greater than one-inch diameter. Such a break is similar to those analyzed in subsection 15.6.5. Since a break in the head vent line would behave similarly to the hot leg break case presented in subsection 15.6.5, the results presented therein apply to a reactor vessel head vent system line break. This postulated vent line results in no calculated core uncovery.

Subsection 5.4.6 and Section 6.3 discuss the evaluation of the automatic depressurization system valves. Inadvertent opening of an automatic depressurization system valve is included in the transients considered for specification of the inadvertent reactor coolant system depressurization in subsection 3.9.1.

Section 6.3 discusses the evaluation of the passive residual heat removal heat exchanger and core makeup tanks. These high point vent lines contain two manual isolation valves in series, so that a single failure of either valve to reclose following venting operation does not prevent isolation of the flow path. The high point vent line from the passive residual heat removal heat exchanger to the in-containment refueling water storage tank contains a flow-restricting orifice such that postulated break flow is within the makeup capability of the chemical and volume control system and therefore would not normally require actuation of the passive safety systems.

5.4.12.4 Inspection and Testing Requirements

Inservice inspection of ASME Code Classes 2 and 3 components is conducted according to Section 6.6. Subsection 3.9.6 discusses inservice testing and inspection of valves. Subsection 5.2.4 discusses inservice inspection and testing of ASME Code, Class 1 components that are part of the reactor coolant pressure boundary.

The requirements for tests and inspections for reactor coolant system valves is found in subsection 5.4.8.4. In addition, tests for the reactor vessel head vent valves and piping are conducted during preoperational testing of the reactor coolant system, as discussed in Section 14.2.

5.4.12.4.1 Flow Testing

Initial verification of the capacity of the reactor vessel head vent valves is performed during the plant initial test program. A low pressure flow test and associated analysis is conducted to determine the capacity of each reactor vessel head vent flow path. The reactor coolant system is at cold conditions with the pressurizer full of water. The normal residual heat removal pumps are used to provide injection flow into the reactor coolant system, discharging through the reactor vessel head vent valves. The measured flow rate at low pressure is such that the head vent flow capacity is at least 8.2 lbm/sec at an RCS pressure of 1250 psia.

5.4.12.5 Instrumentation Requirements

The reactor head vent valves can be operated from the control room or the remote shutdown workstation. The isolation valves in the vent line and automatic depressurization system valves have position sensors. The position indication from each solenoid-operated isolation valve is monitored in the control room.

5.4.13 Core Makeup Tank

The core makeup tank (CMT) in the passive core cooling system stores cold borated water under system pressure for high pressure reactor coolant makeup. See Section 6.3 for a discussion of the operation of the core makeup tank in the passive core cooling system and the connections to the core makeup tank.

5.4.13.1 Design Bases

The core makeup tank is designed and fabricated according to the ASME Code, Section III as a Class 1 component. See subsection 5.2.1. The boundaries of the ASME Code include the pressure-containing materials up to, but excluding, the circumferential welds at nozzle safe ends. The manway cover and bolting materials are included within this boundary. The core makeup tank is AP1000 equipment Class A (ANS Safety Class 1, Quality Group A). Stresses are maintained within the limits of the ASME Code, Section III. Section 5.2 provides the ASME Code and material requirements. Subsection 5.2.4 discusses inservice inspection.

Materials of construction are specified to minimize corrosion/erosion and to provide compatibility with the operating environment, including the expected radiation level. Subsection 5.2.3 discusses the welding, cutting, heat treating and other processes used to minimize sensitization of stainless steel.

Instrumentation nozzles are welded to the clad inside wall of the vessel according to ASME Code, Section III. Butt welds, branch connection nozzle welds, and boss welds are of a full-penetration design. Flanges conform to ANSI B16.5.

The transients used to evaluate the core makeup tank are based on the system design transients described in subsection 3.9.1.1. In addition to normal reactor coolant system transients, two additional Service Level B transients affect only the core makeup tank. There are an assumed 30 occurrences of the first transient, leakage at power, in the plant lifetime. This event covers situations which a small leak draws in hot reactor coolant system fluid. There are an assumed 10 occurrences in the plant lifetime of the second transient, increase in containment temperature above normal operating range.

5.4.13.2 Design Description

The core makeup tank is a low-alloy steel vessel with 308L stainless steel internal cladding. The minimum free internal volume for the core makeup tank is 2500 cubic feet. The normal full-power temperature and pressure in the core makeup tank are 70° to 120°F and 2250 psia, respectively. The tank is designed to withstand the design environment of 2500 psia and 650°F. The core makeup tank is a vertically mounted, cylindrical pressure vessel with hemispherical top and bottom heads.

The core makeup tank is supported on columns. One nozzle on the lower head connects the tank to the reactor vessel direct vessel injection (DVI) piping. One nozzle in the center of the upper head connects the tank to a line connected to one of the RCS cold legs. The top nozzle incorporates a diffuser inside the tank. The diffuser has the same diameter and thickness as the connecting piping. The bottom of the diffuser is plugged and holes are drilled in the side. The diffuser forces the steam flow to turn 90 degrees which limits the steam penetration into the coolant in the core makeup tank. The core makeup tank includes a manway and cover in the shell to allow access to the tank interior.

To maintain system pressure, the flowpath from the reactor coolant system cold leg to the upper head of the core makeup tank is normally open. The core makeup tank discharge piping flow path

from the lower head to the reactor vessel is blocked by two normally closed, fail-open, parallel isolation valves. See Section 6.3 for a description of the system operation.

The tank includes nozzles and flanges for connection to level detection instrumentation.

Two sample lines, one in the upper head and the other in the lower head, are provided for sampling the solution in the core makeup tank. A fill connection is provided for core makeup tank make up water from the chemical and volume control system.

5.4.13.3 Design Evaluation

Subsection 3.9.3 discusses the loading combinations, stress limits, and analytical methods for the structural evaluation of the reactor coolant system core makeup tank for design conditions, normal conditions, anticipated transients, and postulated accident conditions. Subsection 3.9.2 discusses the requirements for dynamic testing and analysis. The reactor coolant system design transients for normal operation, anticipated transients and postulated accident conditions are discussed in subsection 3.9.1.

Stress intensities resulting from design loads do not exceed the limits specified in ASME Code, Section III. The rules for the evaluation of the faulted conditions are defined in Appendix F of the ASME Code, Section III. Only those stress limits applicable for an elastic system analysis are used for the external load analysis.

5.4.13.4 Material Corrosion/Erosion Evaluation

Those portions of the core makeup tank in contact with reactor coolant are fabricated from or clad with stainless steel. The water chemistry of the core makeup tank, comparable to reactor coolant, causes minimal corrosion of the stainless steel. Erosion is not an issue, since there is normally no flow. A periodic analysis of the coolant chemical composition verifies that the reactor coolant quality meets the specifications, as discussed in subsection 5.2.3.

Contamination of stainless steel and nickel-chromium-iron alloys by copper, low-melting-temperature alloys, mercury, and lead is prohibited. The material selection, water chemistry specification, and residual stress in the piping minimize the potential for stress corrosion cracking, as discussed in subsection 5.2.3.

5.4.13.5 Test and Inspections

Charpy V-notch tests and drop-weight fracture toughness tests are performed as required. Orientation of test specimens is according to the ASME Code, Section III, except that the material is not considered to be subjected to high irradiation.

Compliance with the sensitization requirement is demonstrated by passing the susceptibility to intergranular attack test of ASTM A-262, Practice E, including the oxalic acid screening test according to Practice A. Inservice inspection requirements for Class 1 are discussed in Section 5.2.4.

In addition, materials and welds are inspected according to the requirements of the ASME Code, Section III Class 1.

5.4.14 Passive Residual Heat Removal Heat Exchanger

The passive residual heat removal heat exchanger (PRHR HX) is the component of the passive core cooling system that removes core decay heat for any postulated non-loss of coolant accident event where a loss of cooling capability via the steam generators occurs. Section 6.3 discusses the operation of the passive residual heat removal heat exchanger in the passive core cooling system.

5.4.14.1 Design Bases

The passive residual heat removal heat exchangers automatically removes core decay heat for an unlimited period of time, assuming the condensate from steam generated in the in-containment refueling water storage tank (IRWST) is returned to the tank. The passive residual heat removal heat exchanger is designed to withstand the design environment of 2500 psia and 650°F.

The passive residual heat removal heat exchanger and the in-containment refueling water storage tank are designed to delay significant steam release to the containment for at least one hour. The passive residual heat removal heat exchanger will keep the reactor coolant subcooled and prevent water relief from the pressurizer.

The passive residual heat removal heat exchanger in conjunction with the passive containment cooling system can remove heat for an indefinite time in a closed-loop (that is, no pipe break) mode of operation. In addition, the passive residual heat removal heat exchanger will cool the reactor coolant system, with reactor coolant pumps operating or in the natural circulation mode, so that the reactor coolant system can be depressurized to reduce stress levels in the system if required. See Section 6.3 for a discussion of the capability of the passive core cooling system.

The passive residual heat removal heat exchanger is designed and fabricated according to the ASME Code, Section III, as a Class 1 component. Those portions of the passive residual heat exchanger that support the primary-side pressure boundary and falls under the jurisdiction of ASME Code, Section III, Subsection NF are AP1000 equipment Class A (ANS Safety Class 1, Quality Group A). Stresses for ASME Code, Section III equipment and supports are maintained within the limits of Section III of the Code. Section 5.2 provides ASME Code, Section III and material requirements. Subsection 5.2.4 discusses inservice inspection.

Materials of construction are specified to minimize corrosion/erosion and to provide compatibility with the operating environment, including the expected radiation level. Subsection 5.2.3 discusses the welding, cutting, heat treating and other processes used to minimize sensitization of stainless steel.

5.4.14.2 Design Description

The passive residual heat removal heat exchanger consists of an upper and lower tubesheet mounted through the wall of the in-containment refueling water storage tank. A series of 0.75-inch outer diameter C-shaped tubes connect the tubesheets shown in Figure 6.3-5. The primary coolant passes through the tubes, which transfer decay heat to the in-containment refueling water storage

tank water and generate enough thermal driving head to maintain the flow through the heat exchanger during natural circulation. The design minimizes the diameter of the tubesheets and allows ample flow area between the tubes in the in-containment refueling water storage tank.

The horizontal lengths of the tubes and lateral support spacing in the vertical section allow for the potential temperature difference between the tubes at cold conditions and the tubes at hot conditions. The tubes are supported in the in-containment refueling water storage tank interior with a frame structure.

The passive residual heat removal heat exchanger is welded to the in-containment refueling water storage tank.

5.4.14.3 Design Evaluation

Subsection 3.9.3 discusses the loading combinations, stress limits, and analytical methods for the structural evaluation of the passive residual heat removal heat exchanger for design conditions, normal conditions, anticipated transients, and postulated accident conditions. Operation of passive residual heat removal heat exchanger is evaluated using Service Levels B, C, and D plant conditions. In addition to loads due to conditions in the reactor coolant system and operation of the passive residual heat removal heat exchanger, the passive residual heat removal heat exchanger is evaluated for hydraulic loads due to discharge of steam from the automatic depressurization system valves into a sparger in the in-containment refueling water storage tank. These loads are evaluated using Service Level B limits and are not combined with any other Service Level C or D conditions.

Seismic, loss of coolant accident, sparger activation and flow-induced vibration loads are derived using dynamic models of the passive residual heat removal heat exchanger. The dynamic analysis considers the hydraulic interaction between the coolant (steam or water) and the system structural elements.

Subsection 3.9.2 discusses the requirements for dynamic testing and analysis. Subsection 3.9.1 discusses the reactor coolant system design transients for normal operation, anticipated transients, and postulated accident conditions. In addition to reactor coolant system design transients, there are two additional Service Level B transients that affect only the passive residual heat removal heat exchanger. In the plant lifetime, there are an assumed 30 occurrences of the first transient, leakage at power. This event covers situations in which a small leak in the manway cover draws in hot reactor coolant system fluid. There are an assumed 10 occurrences in the plant lifetime of the second transient, increase in in-containment refueling water storage tank temperature, due an event which activates passive core cooling.

Stress intensities resulting from design loads do not exceed the limits specified in ASME Code, Section III. The rules evaluating the Service Level D conditions are defined in Appendix F of the ASME Code, Section III. Only those stress limits applicable for an elastic system analysis are used for the external load analysis.

During normal plant operation the system is pressurized to the reactor coolant system hot leg pressure at the temperature of the in-containment refueling water storage tank. The pressure transients during normal plant operation are the same as those for the reactor coolant system hot

leg. There is no flow through the passive residual heat removal heat exchanger during normal plant operation. The tubesheet temperatures are calculated to provide sufficient temperature drop between the tubesheet and the attachment to the tank. Section 6.3 describes the passive residual heat removal heat exchanger performance characteristics.

5.4.14.4 Material Corrosion/Erosion Evaluation

Those portions of the passive residual heat removal heat exchanger in contact with reactor coolant are fabricated from or clad with corrosion-resistant material. The use of severely sensitized austenitic stainless steel in the pressure boundary of the reactor coolant system is prohibited. A periodic analysis of the coolant chemical composition verifies that the reactor coolant quality meets the specifications discussed in subsection 5.2.3.

Sulphur, lead, copper, mercury, aluminum, antimony, arsenic, and other low-melting-point elements and their alloys and compounds are restricted in their use as construction materials, erection aids, cleaning agents, and coatings for finished surfaces of the passive residual heat removal heat exchanger that are in contact with reactor coolant system fluid or in-containment refueling water storage tank. Contamination of stainless steel and nickel-chromium-iron alloys by copper, low-melting-temperature alloys, mercury, and lead is prohibited. The material selection, water chemistry specification, and residual stress in the piping minimize the potential for stress corrosion cracking, as discussed in subsection 5.2.3.

Stainless steel and nickel-chromium-iron alloys used in the passive residual heat removal heat exchanger are procured to ASME specifications.

5.4.14.5 Testing and Inspections

The passive residual heat removal heat exchanger is designed and manufactured to permit inservice inspection as specified in the ASME Code, Section XI. Methods and techniques developed for steam generator tube eddy current inspection can be used for the passive residual heat removal heat exchanger tubes.

Access for inspection and maintenance is possible through manways in the top and bottom channel heads without draining the in-containment refueling water storage tank.

The design of the passive residual heat removal heat exchanger incorporates a flexible member at the heat exchanger to in-containment refueling water storage tank interface to minimize the load imposed on the wall of the in-containment refueling water storage tank resulting from thermal expansion on the tubesheet.

Hydrostatic tests are performed in accordance with the requirements of the ASME Code, Section III, using working fluids meeting the appropriate water chemistry specifications.

5.4.15 Combined License Information

The Combined License applicant will address steam generator tube integrity with a Steam Generator Tube Surveillance Program and will address the need to develop a program for periodic monitoring of degradation of steam generator internals.

5.4.16 References

1. Not used.

2. Hagg, A. C. and Sankey, G. O., "The Containment of Disk Burst Fragments by Cylindrical Shells," ASME Journal of Engineering for Power, April 1974, pp. 114-123.

3. Not used.

4. ASTM-E-165-95, "Practice for Liquid Penetrant Inspection Method."

5. ANSI/ANS-5.1-1994, "Decay Heat Power in Light Water Reactors."

6. ANSI/ANS-51.1-1983, "Nuclear Safety Criteria for the Design of Stationary Pressurized Water Reactor Plants."

7. ANSI N278.1-1975, "Self-Operated and Power-Operated Safety-Relief Valves Functional Specification Standard."

8. ASME QME-1-2007 Edition, "Qualification of Active Mechanical Equipment Used in Nuclear Power Plants."

9. ANSI B16.34-1996, "Valves - Flanged and Buttwelding End."

10. Curtiss-Wright Electro-Mechanical Corporation Report AP1000RCP-06-009-P, Revision 2 (Proprietary), and AP1000RCP-06-009-NP, Revision 2 (Non-Proprietary), "Structural Analysis Summary for the AP1000 Reactor Coolant Pump High Inertia Flywheel," July 2009.

Table 5.4-1

REACTOR COOLANT PUMP DESIGN PARAMETERS

Unit design pressure (psia)	2500
Unit design temperature (°F)	650
Estimated Unit overall height (ft)	22
Component cooling water flow (gpm)	650
Maximum continuous component cooling water inlet temperature (°F)(1)	95
Total estimated weight motor and casing, dry (lb)	200,000
Pump	
Design flow (gpm)	78,750
Developed head (feet)	365
Pump discharge nozzle, inside diameter (inches)	22
Pump suction nozzle, inside diameter (inches)	26
Speed (synchronous)(rpm)	1800
Motor	
Type	Squirrel Cage Induction
Voltage (V)	6900
Phase	3
Frequency (Hz)	60
Insulation class	Class H or N
Current (amp)	
Starting	Variable
Nominal input, cold reactor coolant	Variable
Motor/pump rotor minimum required moment of inertia	Sufficient to provide flow coastdown as given in Figure 15.3.2-1

Note:

1. An elevated component cooling water supply temperature of up to 110°F may occur for a 6-hour period.

Table 5.4-2 Not Used.

Table 5.4-3

REACTOR COOLANT PUMP QUALITY ASSURANCE PROGRAM

	RT[a]	UT[a]	PT[a]	MT[a]
Castings – Casing (or pressure boundary)	X		X	
Flywheel		X	X	X
Forgings		X		X
Plate			X	
Weldments				
Circumferential	X	X	X	
Instrument connections			X	
Motor terminals[b]	X		X	

Notes:
(a) RT - radiographic, UT - ultrasonic, PT - dye penetrant, MT - magnetic particle
(b) See subsection 5.4.1.3.3.

Table 5.4-4

STEAM GENERATOR DESIGN REQUIREMENTS

Type	Vertical U-tube Feedring-type
Design pressure, reactor coolant side (psia)	2500
Design pressure, steam side (psia)	1200
Design pressure, primary to secondary (psi)	1600
Design temperature, reactor coolant side (°F)	650
Design temperature, steam side (°F)	600
S/G Power, MWt/unit	1707.5
Total heat transfer surface area (ft^2)	123,538
Steam nozzle outlet pressure, psia	836
Steam flow, lb/hr per S/G	7.49×10^6
Total steam flow, lb/hr	14.97×10^6
Maximum moisture carryover (weight percent) maximum	0.25
No load temperature, °F	557
Feedwater temperature, °F	440
Number of tubes per unit	10,025
Tube outer diameter, inch	0.688
Tube wall thickness, inch	0.040
Tube pitch, inches	0.980 (triangular)

Table 5.4-5

STEAM GENERATOR DESIGN PARAMETERS (NOMINAL VALUES)

Tube pitch, inches	0.980 (triangular)
Overall length, inches	884.26*
Upper shell I.D., inches	210
Lower shell I.D., inches	165
Tubesheet thickness, inches	31.13**
Primary water volume, ft^3	2077
Water volume in tubes, ft^3	1489
Water volume in plenums, ft^3	588
Secondary water volume, ft^3	3646
Secondary steam volume, ft^3	5222
Secondary water mass, lbm	175,758
Design fouling factor, hr-°F-ft^2/BTU	9.0×10^{-5}

Notes:

* Measured from steam nozzle to the flat, exterior portion of the channel head.

** Base metal thickness.

Table 5.4-6

STEAM GENERATOR QUALITY ASSURANCE PROGRAM

	RT[a]	UT[a]	PT[a]	MT[a]	ET[a]
Base Metals					
Tubesheet Forging		Yes		Yes	
Channel Head Forging Plate Casting	Yes	Yes Yes		Yes Yes	
Secondary Shell and Head Forgings Plate		Yes Yes		Yes	
Tubes		Yes			Yes
Nozzles (Forgings)		Yes		Yes	
Safe ends		Yes	Yes		
Welds					
Channel head if fabricated	Yes			Yes	
Pressure boundary, longitudinal if fabricated	Yes			Yes	
Pressure boundary, circumferential	Yes			Yes	
Primary nozzles to fabricated head	Yes			Yes	
Primary nozzles to forged head	Yes			Yes	
Manways to fabricated head or shell	Yes			Yes	
Manways to forged head or shell	Yes			Yes	
Steam and feedwater nozzles to fabricated shell	Yes			Yes	
Steam and feedwater nozzles to forged shell	Yes			Yes	
Support brackets				Yes	
Tube to tubesheet			Yes		
Instrument connections (secondary)				Yes	
Temporary attachments after removal				Yes	
After hydrostatic test (all major pressure boundary welds and complete cast channel head where accessible)				Yes	
Weld deposit on primary nozzles	Yes		Yes		
Safe end to nozzle	Yes		Yes		
Cladding					
Tubesheet		Yes[b]	Yes		
Channel head		Yes	Yes		
Cladding (channel head-tubesheet joint cladding restoration)		Yes	Yes		

Notes:
(a) RT – Radiographic, UT – Ultrasonic, PT – Dye penetrant, MT – Magnetic particle, ET – Eddy current.
(b) Flat surfaces only

Table 5.4-7

REACTOR COOLANT SYSTEM PIPING DESIGN

Reactor Coolant Loop Piping	
Design Pressure (psig)	2485
Design Temperature (°F)	650
Reactor Inlet Piping	
Inside Diameter (ID)	22
Nominal Wall Thickness	2.56
Reactor Outlet Piping	
Inside Diameter (ID)	31
Nominal Wall Thickness	3.25
Pressurizer Surge Line	
Design Pressure (psig)	2485
Design Temperature (°F)	680
Pressurizer Surge Line Piping	
Nominal Pipe Size	18
Nominal Wall Thickness	1.78
Pressurizer Safety Valve and ADS Valve Inlet Line	
Design Pressure (psig)	2485
Design Temperature (°F)	680
Other Rector Coolant Branch Lines	
Design Pressure (psig)	2485
Design Temperature (°F)	650

Table 5.4-8

REACTOR COOLANT SYSTEM PIPING QUALITY ASSURANCE PROGRAM

	RT[a]	UT[a]	PT[a]
Pipe (Forged Seamless)		Yes	Yes
Fittings		Yes	Yes
Weldments			
Circumferential Butt Welds	Yes		Yes
Branch Nozzle Connections	Yes[b]		Yes
Fillet Weld Instrument Connections			Yes

Notes:
(a) RT - Radiographic; UT - Ultrasonic; PT - Dye Penetrant
(b) No RT is required for branch nozzle connections of 4 inch nominal size smaller.

Table 5.4-9

PRESSURIZER DESIGN DATA

Design pressure (psig)	2485
Design temperature (°F)	680
Surge line nozzle nominal diameter (in.)	18
Spray line nozzle nominal diameter (in.)	4
Safety valve nozzle nominal diameter (in.)	14
Internal volume (ft^3)	2100

Table 5.4-10

PRESSURIZER HEATER GROUP PARAMETERS

Voltage (Vac)	480
Frequency (Hz.)	60
Power Capacity (kW)	
Control Group	370
Backup Group A	245
Backup Group B	245
Backup Group C	370
Backup Group D	370

Table 5.4-11

REACTOR COOLANT SYSTEM DESIGN PRESSURE SETTINGS

	Base Load Mode (Psig)
Hydrostatic test pressure	3106
Design pressure	2485
Safety valves (begin to open)	2485
High pressure reactor trip	2385
High pressure alarm	2310
Pressurizer spray valves (full open)	2310
Pressurizer spray valves (begin to open)	2260
Proportional heaters (begin to operate)	2250
Operating pressure	2235
Proportional heater (full operation)	2220
Backup heaters on	2210
Low pressure alarm	2210
Low pressure safeguards actuation	1795

Table 5.4-12

PRESSURIZER QUALITY ASSURANCE PROGRAM

	RT[a]	UT[a]	PT[a]	MT[a]
Heads				
Forged head		Yes		
Cladding		Yes	Yes	
Shell				
Forgings		Yes		Yes
Cladding		Yes	Yes	
Heaters				
Tubing		Yes[b]	Yes	
Centering of element	Yes			
Nozzle (Forgings)		Yes	Yes[c]	Yes[c]
Weldments				
Shell, circumferential	Yes			Yes
Nozzle to head (if fabricated)	Yes			Yes
Cladding		Yes	Yes	
Nozzle safe end	Yes		Yes	
Instrument nozzle			Yes	
Temporary attachments (after removal)				Yes
Boundary welds (after shop hydrostatic tests)				Yes
Support brackets				Yes

Notes:
(a) RT - Radiographic, UT - Ultrasonic, PT - Dye Penetrant, MT - Magnetic Particle.
(b) Eddy current testing can be used in lieu of UT.
(c) MT or PT.

Table 5.4-13

DESIGN BASES FOR NORMAL RESIDUAL HEAT REMOVAL SYSTEM OPERATION

RNS initiation, hours after reactor shutdown	4
RCS initial pressure (psig)	450
RCS initial temperature (°F)	350
CCS Design Temperature (°F)[(a)]	95
Cooldown time, (hours after shutdown)	96
RCS temperature at end of cooldown (°F)	125

Note:
(a) The maximum CCS temperature during cooldown is 110°F.

Table 5.4-14

NORMAL RESIDUAL HEAT REMOVAL SYSTEM COMPONENT DATA

Normal RHR Pumps (per pump)		
Minimum Flow Required for Shutdown Cooling (gpm)	1400	
Minimum Flow Required for Low Pressure Makeup (gpm)	1100	
Design Flow (gpm)	1500	
Design Head (ft)	360	
Normal RHR Heat Exchangers		
Minimum UA Required for Shutdown Cooling (BTU/hr-°F)	2.2×10^6	
Design Heat Removal Capacity (BTU/hr)(1)	23×10^6	
	Tube Side	**Shell Side**
Design Flow (lb/hr)	750,000	1,405,000
Inlet Temperature (°F)	125	87.5
Outlet Temperature (°F)	94	104
Fluid	Reactor Coolant	CCS

Note:
(1) Design heat removal capacity is based on decay heat at 96 hours after reactor shutdown.

Table 5.4-15

REACTOR COOLANT SYSTEM VALVE DESIGN PARAMETERS

Design pressure (psig)	2485
Preoperational plant hydrotest (psig)	3106
Design temperature (°F)	
Reactor coolant system	650
Pressurizer safety valves and ADS valves	680

Table 5.4-16

REACTOR COOLANT SYSTEM MOTOR-OPERATED VALVES DESIGN OPENING AND CLOSING PRESSURES

	Normal ΔP (PSIG)[a]		Design ΔP (PSIG)	
	OPEN	CLOSE	OPEN	CLOSE
First Stage ADS Valves (RCS-PL-V001A & B)	2235	2235[b,c]	2485	2485
First Stage ADS Isolation Valves (RCS-PL-V011A & B)	2235	2235	2485	2485
Second Stage ADS Valves (RCS-PL-V002A & B)	1200	100[b]	2485	1200
Second Stage ADS Isolation Valves (RCS-PL-V012A & B)	1200	100	2485	1200
Third Stage ADS Valves (RCS-PL-V003A & B)	500	100	2485	1200
Third Stage ADS Isolation Valves (RCS-PL-V013A & B)	500	100	2485	1200
Fourth Stage ADS Isolation Valves (RCS-PL-V014A & B)	N/A[e]	0	200[e]	200
CVS Purification Isolation Valves (CVS-PL-V001,-V002,-003)	2235	2235	2485	2485
Normal RHR Inner/Outer Isolation Valves (RNS-PL-V001A,B -V002A,B)[d]	450	450	600	600

Notes:

(a) Normal expected operating pressures.
(b) Valves are prevented from closing until ADS signal is reset.
(c) First stage ADS valve can be manually actuated for controlled depressurizations or gas venting.
(d) Valves are administratively blocked from opening at the motor control center.
(e) Fourth stage ADS block valves are normally open.

Table 5.4-17

PRESSURIZER SAFETY VALVES – DESIGN PARAMETERS

Number	2
Minimum required relieving capacity per valve (lb/hr)	750,000 at 3% accumulation
Set pressure (psig)	2485 ±25 psi
Design temperature (°F)	680
Fluid	Saturated steam
Backpressure	
Normal (psig)	3 to 5
Expected maximum during discharge (psig)	500
Environmental conditions	
Ambient temperature (°F)	50 to 120
Relative humidity (percent)	0 to 100
Residual Heat Removal Relief Valve - Design Parameters	
Number	1
Nominal relieving capacity per valve, ASME flowrate (gpm)	850
Nominal set pressure (psig)	500*
Full-open pressure, with accumulation (psig)	550*
Design temperature (°F)	400
Fluid	Reactor coolant
Backpressure	
Normal (psig)	3 to 5
Expected maximum during discharge (psig)	21
Environmental conditions	
Ambient temperature (°F)	50 to 120
Relative humidity (percent)	0 to 100

Note:

* See text (5.4.9.3) for discussion of set pressure

Table 5.4-18

REACTOR VESSEL HEAD VENT SYSTEM DESIGN PARAMETERS

System design pressure, psig	2485
System design temperature, °F	650
Number of remotely-operated valves	4
Vent line, nominal diameter, inches	1
Head vent capacity, lbm/sec (assuming a single failure, RCS pressure at 1250 psia)	8.2

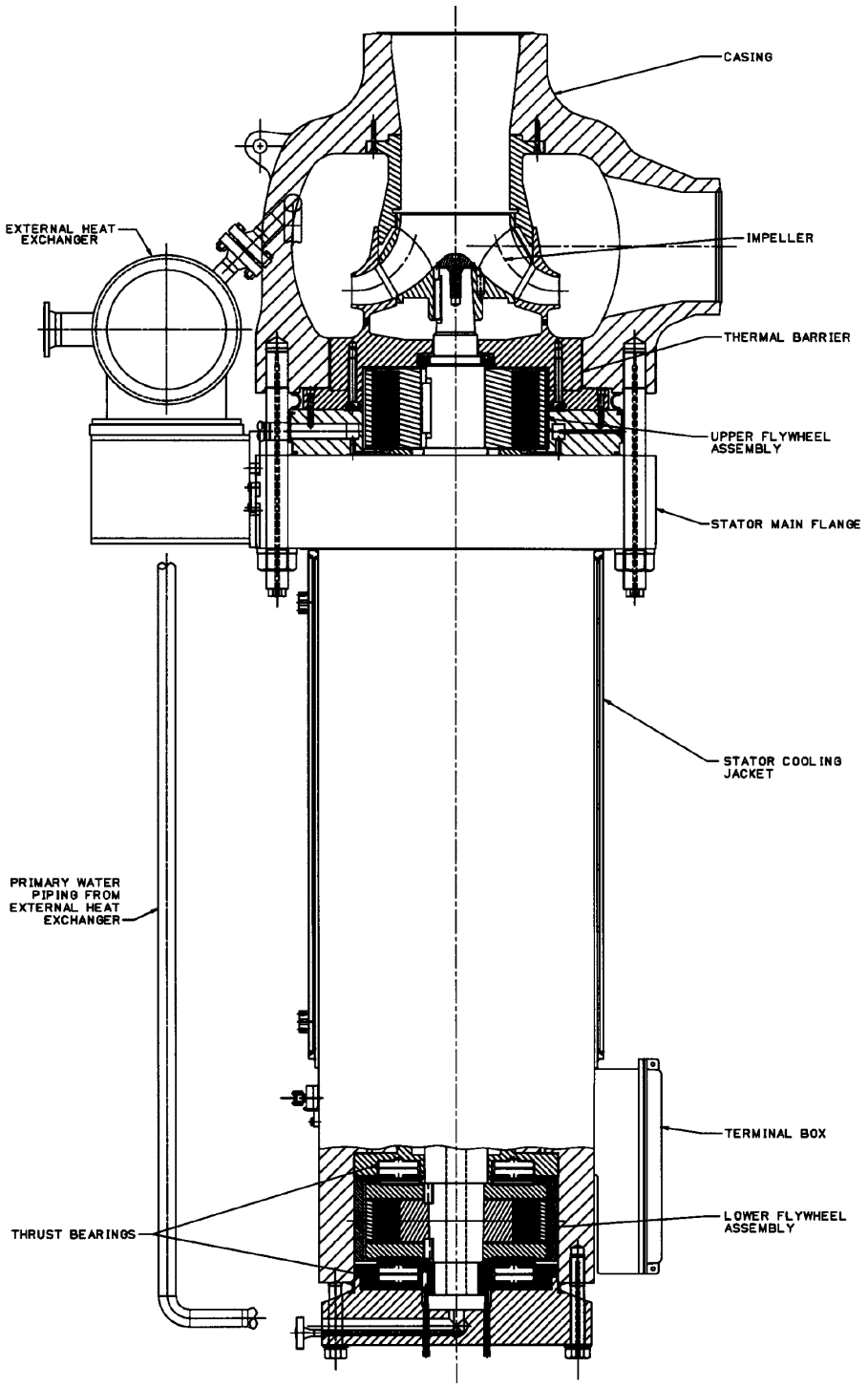

Figure 5.4-1

Reactor Coolant Pump

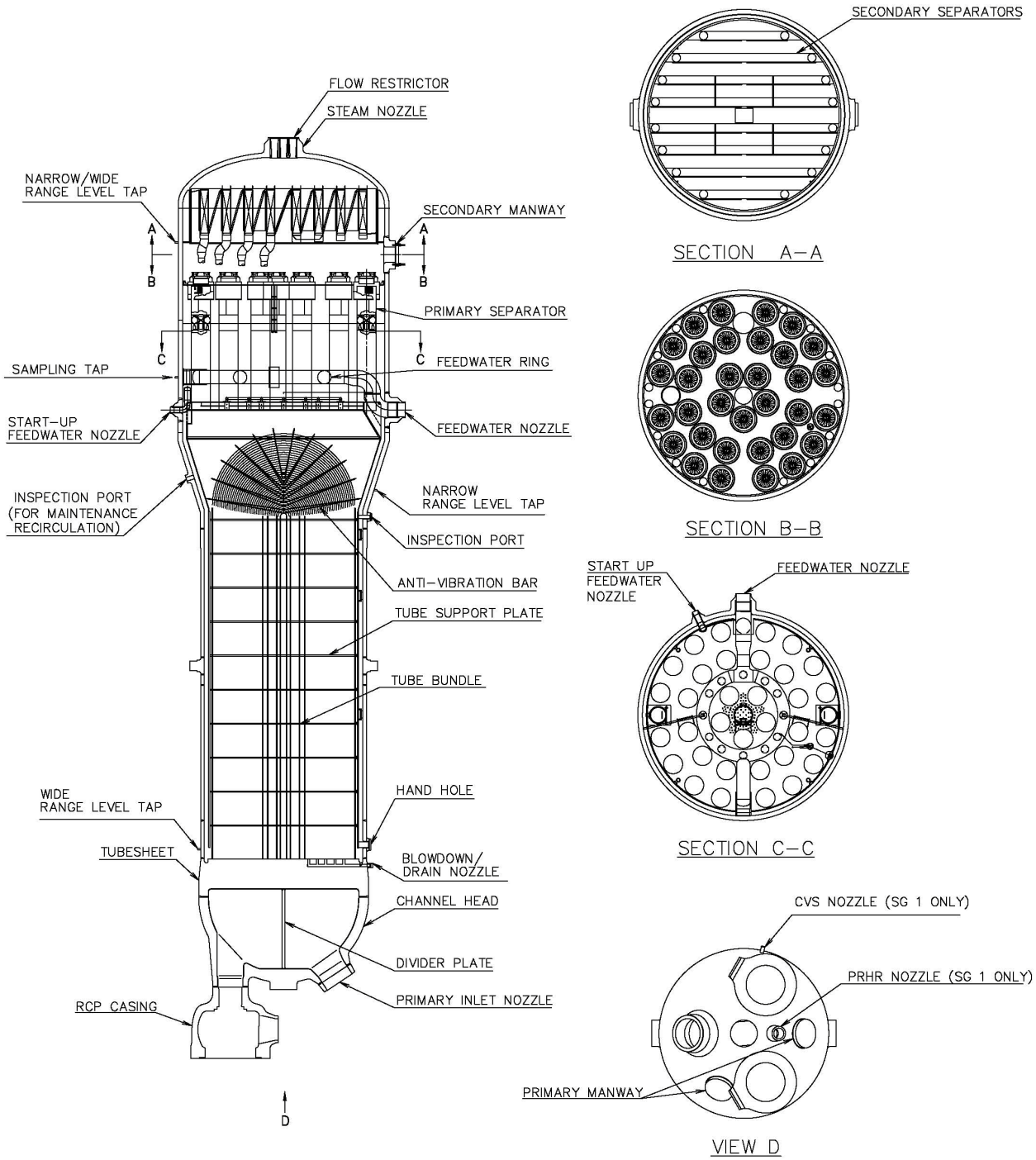

Figure 5.4-2

Steam Generator

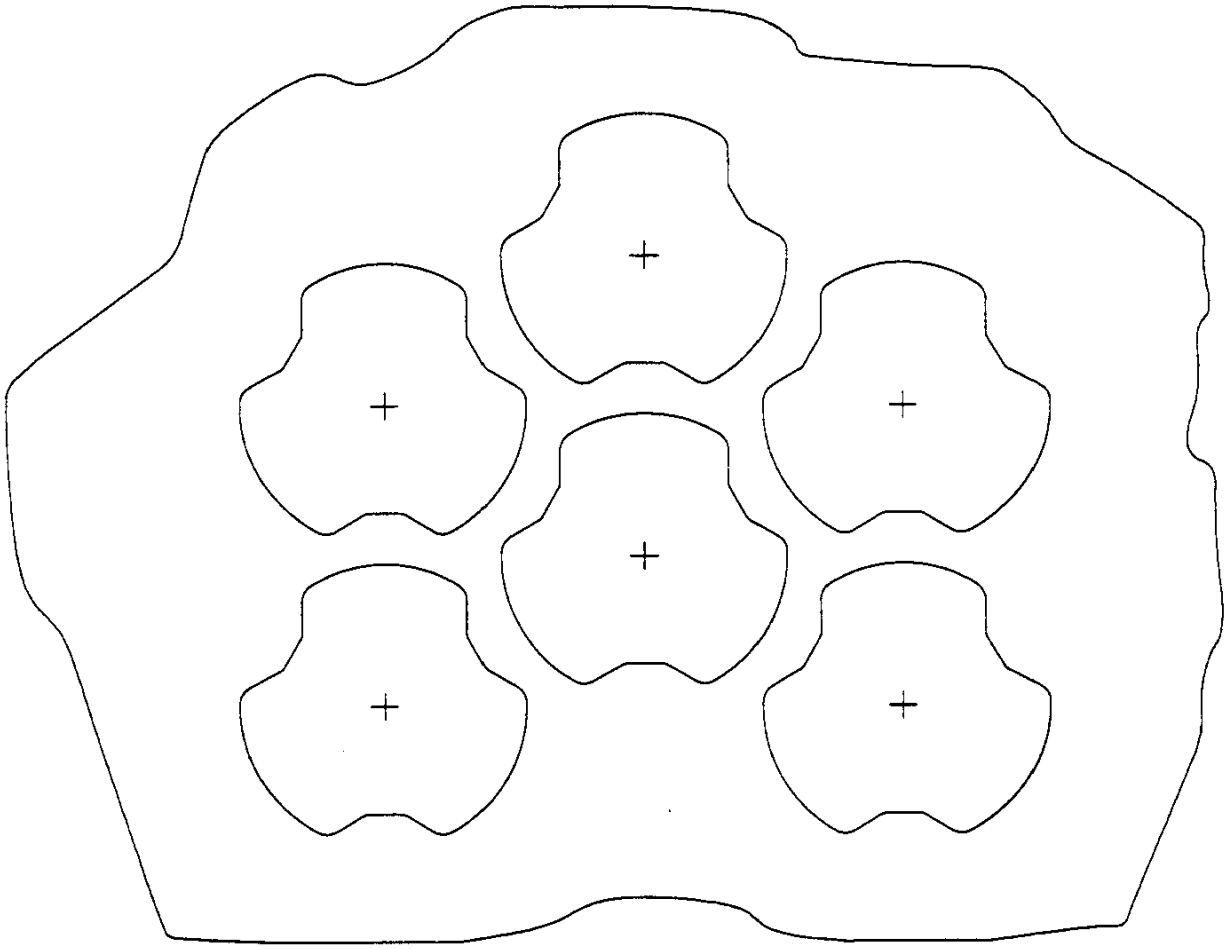

Figure 5.4-3

Support Plate Geometry (Trifoil Holes)

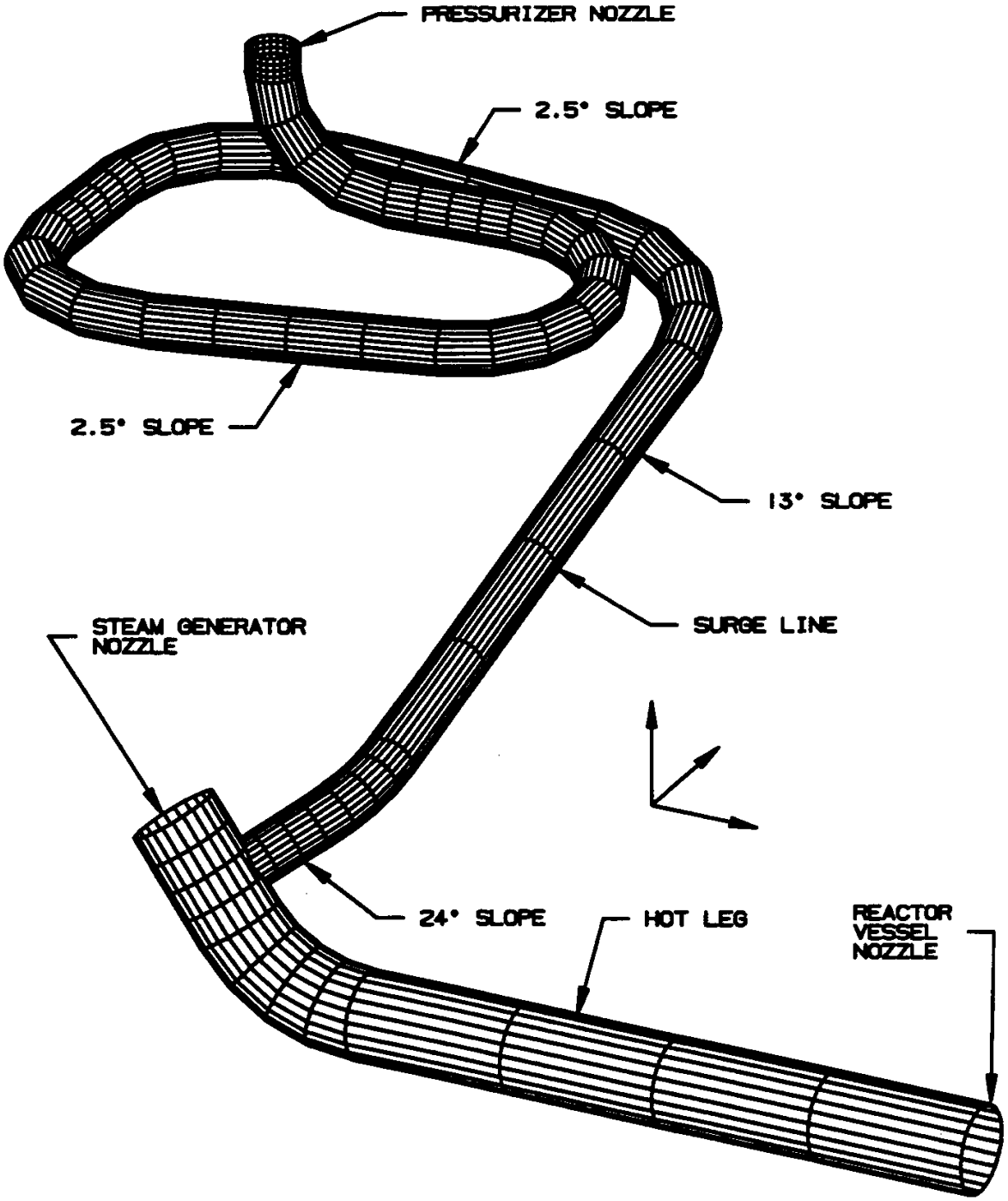

Figure 5.4-4

Surge Line

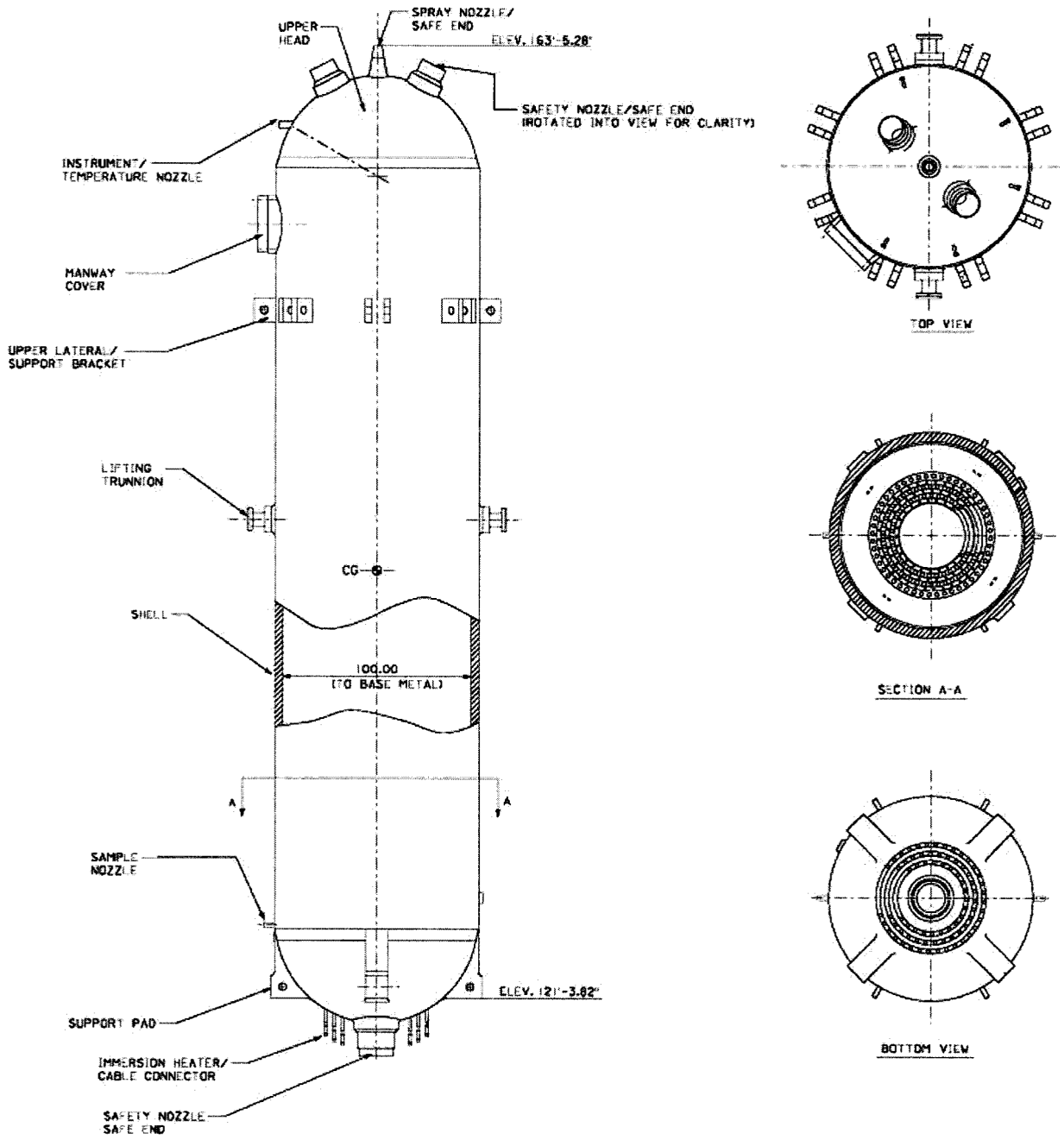

Figure 5.4-5

Pressurizer

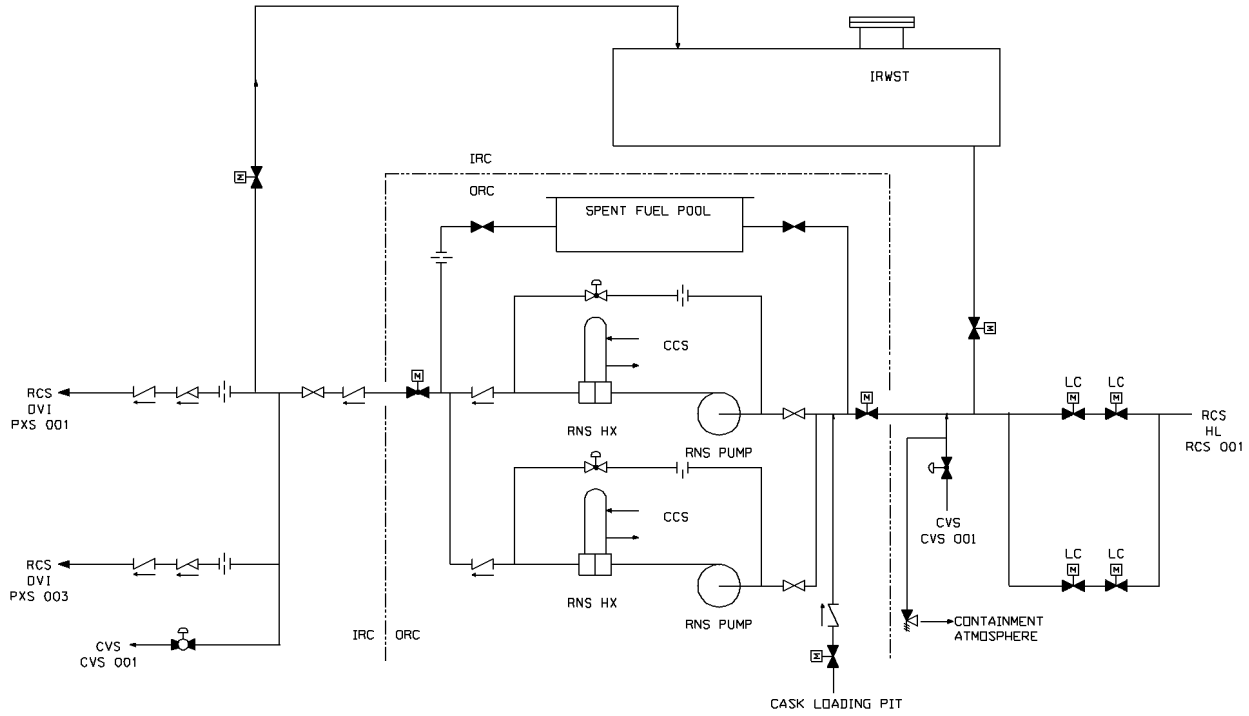

Figure 5.4-6

Normal Residual Heat Removal System

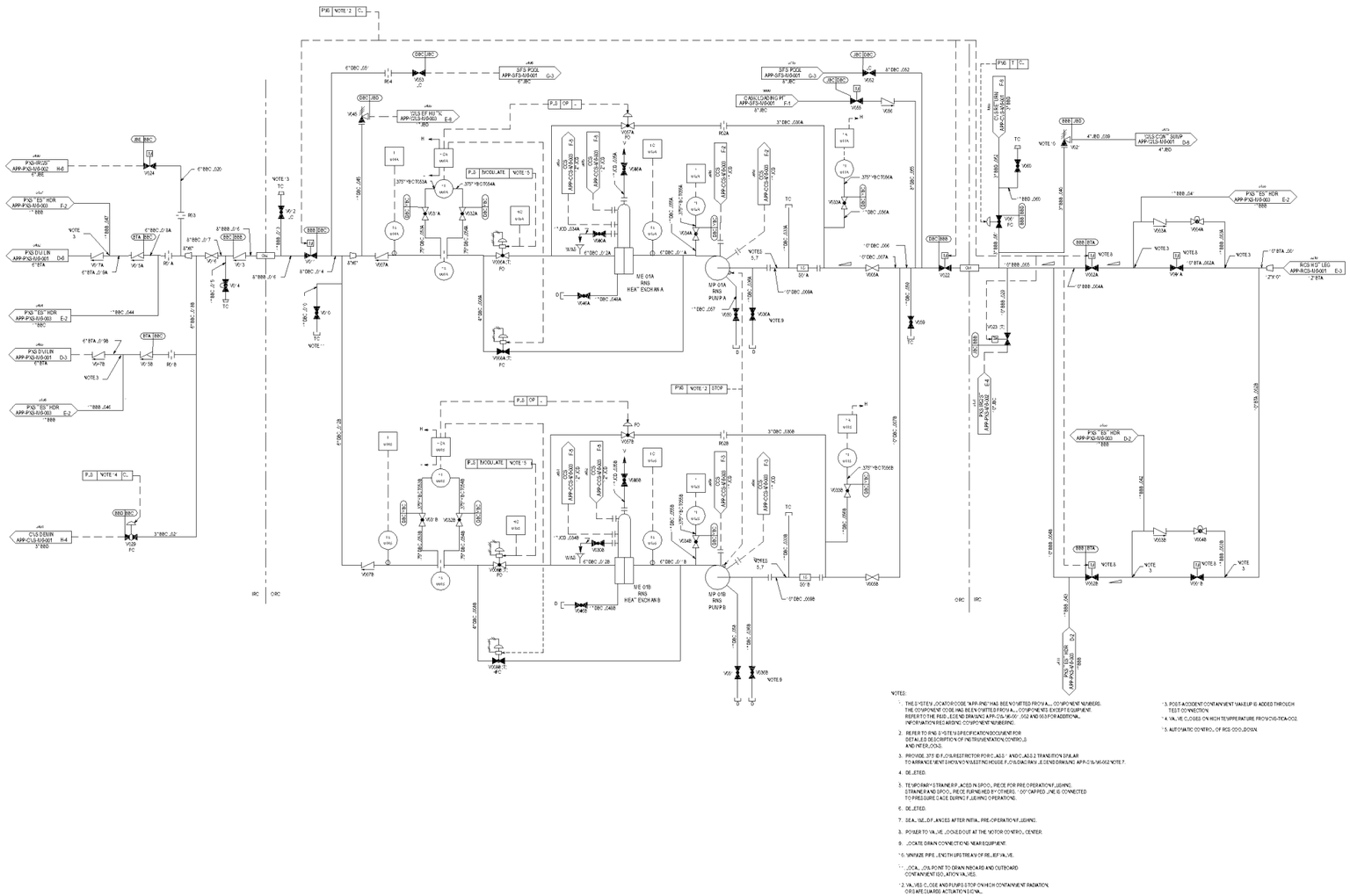

Figure 5.4-7

Normal Residual Heat Removal System Piping and Instrument Diagram

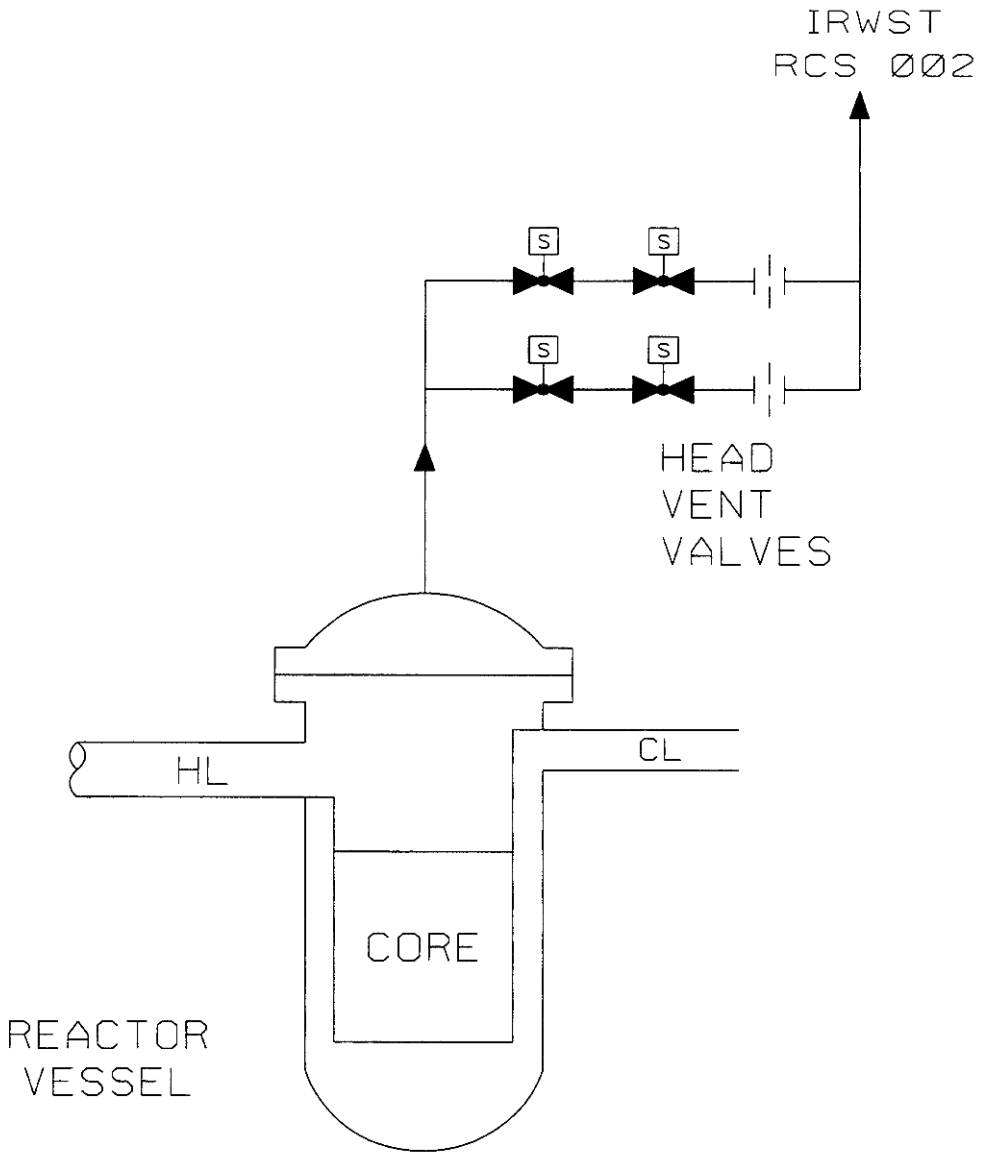

Figure 5.4-8

Reactor Vessel Head Vent System