3.4 Water Level (Flood) Design

External flooding of a nuclear power plant from natural causes can be attributed to probable maximum flood, site and adjacent area probable maximum precipitation runoff, seiche, and ground water. Criteria for the design basis flood are in accordance with the provisions of Regulatory Guide 1.59, Design Basis Floods for Nuclear Power Plants, and Regulatory Guide 1.102, Flood Protection for Nuclear Power Plants. Conformance with the Regulatory Guides is described in Section 1.9. External events are described in Section 2.4. Chapter 2 provides interface data for AP1000 which has an interface flood level at plant grade.

Internal plant flooding can be attributed to piping ruptures, tank failures, or the actuation of fire suppression systems.

3.4.1 Flood Protection

3.4.1.1 Flood Protection Measures for Seismic Category I Structures, Systems, and Components

The seismic Category I structures, systems, and components identified in Section 3.2 are designed to withstand the effects of flooding due to natural phenomena or postulated component failures. A description of the structures is provided in subsections 3.8.2, 3.8.3, and 3.8.4. None of the nonsafety-related structures, systems and components were found to be important based on flooding considerations. As a result, nonsafety-related structures, systems and components are not important in mitigation of flood events and are not required to be protected from either internal or external flooding.

3.4.1.1.1 Protection from External Flooding

The probable maximum flood for the AP1000 has been established at less than plant elevation 100′ as discussed previously in Section 2.4. The probable maximum flood results from site specific events, such as river flooding, upstream dam failure, or other natural causes.

Flooding does not occur from the probable maximum precipitation. The roofs do not have internal roof drains. The annex, radwaste, and diesel/generator buildings have parapets with large openings to drain to scuppers/drains to preclude accumulation of water on the roofs. The roofs are sloped such that rainfall is directed towards gutters located along the edges of the roofs. Therefore, ponding of water on the roofs is precluded. Water from roof drains and/or scuppers, as well as runoff from the plant site and adjacent areas, is conveyed to catch basins, underground pipes, or directly to open ditches by sloping the tributary surface area. The site is graded to offer protection to the seismic Category I structures.

The high ground water table interface is at two feet below the grade elevation, as discussed in Section 2.4.

The components that may be potential sources for external flooding are nonsafety-related, nonseismic tanks as shown in DCD Figure 1.2-2:

- Fire water tanks as described in subsection 9.5.1. These two tanks have volumes of approximately 325,000 and 490,000 gallons, and are located at the north end of the turbine

building. Water will drain from the tanks away from the nuclear island and adjacent buildings due to the required site grading.

- Condensate storage tank as described in subsection 9.2.4. This tank has a volume of approximately 485,000 gallons, and is located at the west side of the turbine building. Water will drain from the tank away from the turbine and auxiliary buildings due to site grading.

- Demineralized water tank as described in subsection 9.2.4. This tank has a volume of approximately 100,000 gallons and is located adjacent to the annex building at elevation 107′-2″. Water will drain from the tank away from the annex building to elevation 100′-0″. Nearby doors lead to areas in the annex building which do not contain safety-related components or systems.

- Boric acid storage tank as described in subsection 9.3.6. This tank has a volume of approximately 70,000 gallons and is located adjacent to the demineralized water storage tank.

- Diesel fuel oil tanks as described in subsection 9.5.4. These two tanks have volumes of approximately 100,000 gallons each. They are located remote from safety-related structures and are provided with dikes to retain leaks and spills.

- Passive containment cooling ancillary water storage tank as described in subsection 6.2.2.3. This tank has a volume of 780,000 gallons and is located at the west side of the auxiliary building. Water will drain from the tank away from the auxiliary building due to site grading.

In addition, failure of the cooling tower or the service water or circulating water piping under the yard could result in a potential flood source. However, these potential sources are located far from safety-related structures and the consequences of a failure in the yard would be enveloped by the analysis described in DCD subsection 10.4.5.

For the AP1000, the 100′-0″ building floor elevations are slightly above the grade elevation. In addition, the slope of the yard grade directs water away from the buildings. Because the probable maximum flood for AP1000 is less than grade elevation, the exterior doors are not required to be watertight for protection from external flooding.

Process piping penetrations through the exterior walls of the nuclear island below grade are embedded in the wall or are welded to a steel sleeve embedded in the wall. There are no access openings or tunnels penetrating the exterior walls of the nuclear island below grade.

The reinforced concrete seismic Category I structures, incorporating the waterproofing and sealing features described above and in subsection 3.4.1.1.1.1, provide hardened protection for safety-related structures, systems, and components as defined in Regulatory Guide 1.59.

3.4.1.1.1.1 Waterproofing

A waterproof membrane or waterproofing system for the seismic Category I structures below grade will be installed as an architectural aide to limit the infiltration of subsurface water. The COL applicant will use a waterproofing system for foundation mat (mudmat) and the below grade exterior walls exposed to flood and groundwater that will demonstrate a friction coefficient ≥ 0.55 with all horizontal concrete surfaces. This friction coefficient is maintained for the life expectancy of the plant and will not introduce a horizontal slip plane increasing the potential for movement during an earthquake (see subsection 3.8.5.5.3). Typical waterproofing approaches are described as follows:

- HDPE Double-Sided Textured Waterproof Membrane

  Figures 3.4-1 and 3.4-2 show the typical application of this waterproofing approach for a mechanically stabilized earth (MSE) wall and for a step-back configuration.

- HDPE Single-Sided Self-Adhering Sheet Waterproofing Membrane

  The HDPE single-sided adhesive sheet membrane is interchangeable with the HDPE double-sided textured membrane for use in the mudmat, and it may be used in certain circumstances to waterproof the walls.

- Self-adhesive, Rubberized Asphalt/Polyethylene Waterproofing Membrane

  The self-adhesive rubberized membrane is for application to waterproof the walls only.

- Sprayed-on Waterproofing Membrane

  This method may be used either for soil sites, in conjunction with an MSE wall, or for rock sites, where an open excavation may be used. The membrane consists of 100-percent solids materials based on polymer-modified asphalt or polyurea. This system may include a polyester reinforcement fabric having properties necessary to meet the performance requirements for the system. Figure 3.4-4 shows the typical installation using MSE walls with the sprayed-on, liquid-applied waterproofing membrane placed on the MSE wall panels and between the two layers of the mudmat. Where the vertical face of excavation is used as a form for the exterior walls, the waterproof membrane is installed on the vertical face of the excavation prior to placement of concrete in the exterior walls.

The waterproof function of the membrane is not safety-related; however, the membrane between the mudmats must provide adequate shear strength to transfer horizontal shear forces due to seismic (SSE) loading. This function is seismic Category I. The waterproof membrane will have physical properties, including surface and texture, to achieve the required coefficient of friction. Primer or geotextile may be added as required.

3.4.1.1.2 Protection from Internal Flooding

The nuclear island general arrangement drawings provided in Section 1.2 are a useful reference for the internal flooding discussion.

The AP1000 arrangement provides physical separation of redundant safety-related components and systems from each other and from nonsafety-related components. As a result, component failures resulting from internal flooding do not prevent safe shutdown of the plant or prevent mitigation of the flooding event. Protection mechanisms are described in Section 3.6. The protection mechanisms related to minimizing the consequences of internal flooding include the following:

- Structural enclosures
- Structural barriers
- Curbs and elevated thresholds
- Leak detection systems
- Drain systems

The AP1000 minimizes the number of penetrations through enclosure or barrier walls below the flood level. Those few penetrations through flood protection walls that are below the maximum flood level are watertight. Any process piping penetrating below the maximum flood level either is embedded in the wall or floor or is welded to a steel sleeve embedded in the wall or floor. There are no watertight doors in the AP1000 used for internal flood protection because, as described in subsection 3.4.1.2.2, they are not needed to protect safe shutdown components from the effects of internal flooding. The walls, floors, and penetrations are designed to withstand the maximum anticipated hydrodynamic loads associated with a pipe failure as described in Section 3.6. The two watertight doors on the waste holdup tank compartments limit the consequence of a failure on spent fuel pool water level.

3.4.1.2 Evaluation of Flooding Events

3.4.1.2.1 External Flooding

Base mat and exterior walls of seismic Category I structures are designed to resist upward and lateral pressures caused by the probable maximum flood and high ground water level. The vertical hydrostatic pressure acting uniformly at the bottom of the base mat is the product of the height to the high water level and the unit weight of water assumed as 62.4 lb/ft^3. The horizontal hydrostatic pressure acting on the exterior walls varies with height, with the maximum at the bottom of the wall and zero at the maximum water level. Minimum factors of safety for overturning, sliding, and flotation are described in subsection 3.8.5. There are no dynamic water forces associated with the probable maximum flood or high ground water level because they are below the finished grade. Dynamic forces associated with the probable maximum precipitation are not factors in the analysis or design since the finished grade is adequately sloped.

There are no safety-related hydraulic structures for AP1000.

3.4.1.2.2 Internal Flooding

This section describes the consequences of compartment flooding for various postulated component failures. The equipment required to achieve and maintain safe shutdown depends on the initiating event. The safety-related systems and components available for safe shutdown are described in Section 7.4. This equipment is located in the auxiliary building and inside containment. Except for floor drains, no credit is taken in this evaluation for the availability of nonsafety-related systems or components.

Each area of the plant containing safety-related systems or equipment is reviewed to determine the postulated fluid system failures which would result in the most adverse internal flooding conditions. For the internal flooding analysis, the failure of safety-related systems, structures or components is acceptable provided they have no safe shutdown function or the safe shutdown function is otherwise accomplished. The internal flooding analysis shows that systems, structures, and components are not prevented from performing their required safe shutdown functions due to the effects of the postulated failure. In addition, the analysis identifies the protection features that mitigate the consequences of flooding in an area that contains safety-related equipment.

The flooding sources considered in the analysis consist of the following:

- High-energy piping (breaks and cracks)
- Through-wall cracks in seismically-supported moderate energy piping
- Breaks and through-wall cracks in non-seismically-supported moderate energy piping
- Pump mechanical seal failures
- Storage tank ruptures
- Actuation of fire suppression systems
- Flow from upper elevations and adjacent areas

The analysis is performed based on the criteria and assumptions provided in Section 3.6 and ANS-56.11 (Reference 1). Section 3.6 provides the criteria used to define break and crack locations and configurations for high and moderate-energy piping failures. Additional design criteria pertaining to the internal flooding analysis are provided in this section.

The analysis consists of the following steps:

- Identification of the flood sources
- Identification of essential equipment in area
- Determination of flowrates and flood levels
- Evaluation of effects on essential equipment

As stated in Section 3.6, high-energy ASME Code Class 1, 2, and 3 piping of 6 inch nominal diameter or larger inside the containment is evaluated for mechanistic pipe break (leak-before-break) for AP1000. Those high-energy piping systems that do not satisfy the mechanistic pipe break requirements inside containment and high-energy lines outside containment are evaluated for non-mechanistic breaks and cracks, as above.

Fluid flowrates from high- and moderate-energy piping ruptures are determined based on the criteria provided in Section 3.6 and ANSI 56.11 (Reference 1). Fluid flowrates through stairwells, floor openings, and floor sleeves are determined in accordance with the formulas given in Reference 1.

No breaks are assumed for piping with nominal diameters of 1 inch or less. For each storage tank rupture, it is assumed that the entire tank inventory is drained.

The analysis of potential flooding events is performed on a floor-by-floor and room-by-room basis depending upon the relative location of safety-related equipment. No credit is taken for operation of sump pumps to mitigate the consequences of flooding.

3.4.1.2.2.1 Containment Flooding Events

General

The safe shutdown systems and components located inside the containment are associated with the passive core cooling system (PXS), the automatic depressurization system (ADS), and containment isolation.

The evaluation of containment flooding events addresses the impact of flooding on the safe shutdown systems and components. The AP1000 passive core cooling system, the internal containment compartments, and the equipment locations are designed for internal flooding to maintain post accident long-term cooling flow to the reactor core from the flooded volumes.

In the unlikely event of a loss-of-coolant accident (LOCA), the combined water inventory from available sources within the containment is sufficient to flood the reactor and steam generator compartments to a level above the reactor coolant system piping to provide water flow back into the reactor coolant system via the break location or via the passive core cooling system containment recirculation subsystem (see DCD Section 6.3) flow path.

The potential for flooding safe shutdown components inside containment that would be required to perform safe shutdown functions is limited to two equipment compartments. These compartments are located in the southeast and northeast quadrants of the containment below the floor at elevation 107′-2″. For flood evaluation, these compartments extend up to the top of the curbs through the openings in the floor. These two compartments contain passive core cooling system components that provide two redundant means for delivering borated water to the reactor coolant system when required for safe shutdown.

The two passive core cooling system compartments primarily contain passive core cooling system components. The southeast compartment is referred to as the PXS-A compartment and the northeast compartment as the PXS-B compartment. The principal passive core cooling system

component in each passive core cooling system compartment is an accumulator. A passive core cooling system core makeup tank is located above each passive core cooling system compartment. Each passive core cooling system compartment also contains isolation valves for the accumulator, the core makeup tank, the in-containment refueling water storage tank, and the passive core cooling system containment recirculation subsystem line.

There are seven automatically actuated containment isolation valves inside containment subject to flooding. These normally closed containment isolation valves are not required to operate during a safe shutdown operation and they would not fail open as a result of the compartment flooding. Also, there is a redundant, normally closed, containment isolation valve located outside containment in series with each of these valves.

The PXS-A compartment contains one normally closed spent fuel pit cooling system containment isolation valve. The PXS-B compartment contains four normally closed normal residual heat removal system containment isolation valves. The maintenance floor contains two normally closed liquid radwaste system containment isolation valves located partially below the maximum flood level.

Except for the valves mentioned above, the rest of the automatically actuated containment isolation valves are located above the maximum flood level; therefore, these components would not be adversely affected by postulated flooding.

Flooding can be postulated from a failure of several systems located inside the containment. The worst case flooding scenario is a LOCA. The maximum flood level for a LOCA is based on the combined inventory of the reactor coolant system, the two accumulators, the two core makeup tanks, and the in-containment refueling water storage tank flooding the containment. The maximum inventory also considers makeup from the cask loading pit and boric acid tank.

Curbs are provided around openings through the maintenance floor at elevation 107′-2″ to control flooding. Overflow into the refueling canal occurs through a pipe centered at elevation 110′-0″. Curbs around openings into the chemical and volume control system compartment extend up to elevation 110′-0″. Curbs around openings into the PXS-A compartment extend up to elevation 110′-2″. Curbs around openings into the PXS-B compartment extend up to elevation 110′-1″. With these curb elevations, water flooding the maintenance floor is directed first into the refueling canal, then into the CVS compartment, then into the PXS-B compartment, and finally into the PXS-A compartment.

The evaluation of containment flooding from postulated component failures includes the compartments that are located below the maximum flood level. There are seven subcompartments that contain components below the floor at elevation 107′-2″. The active safe shutdown components inside containment which are located below the maximum flood level are located in only two of the seven floodable compartments.

The seven compartments partially or completely below the maximum flood level include the reactor vessel cavity, the two steam generator compartments, the vertical access tunnel, the two passive core cooling system compartments, and the chemical and volume control system compartment. The safe shutdown components are located in the two passive core cooling system compartments.

The reactor vessel cavity and the two steam generator compartments are interconnected by a large vertical access tunnel. These four compartments are treated, in this discussion, as one large floodable volume and they are referred to as the reactor coolant system compartment. Flooding of this compartment above elevation 107′-2″ also includes the maintenance floor outside the curbs around the other three compartments.

The PXS-A compartment (Room 11206), PXS-B compartment (Room 11207), and the chemical and volume control system compartment (Room 11209) are physically separated and isolated from each other by structural walls and curbs such that flooding in any one of these compartments or in the reactor coolant system compartment cannot cause flooding in any of the other compartments. The access hatch to the PXS-B compartment is located near the containment wall and is normally closed to address severe accident considerations. The access hatch to the PXS-B compartment is accessible from Room 11300 on elevation 107′-2″.

The fire protection system and the demineralized water transfer and storage system are open-cycle systems that enter the containment. During plant operation, the containment piping for these systems is isolated by containment isolation valves and is not a potential flooding source. These systems are not open systems as defined in Bulletin 80-24 (one that has an essentially unlimited source).

Reactor Coolant System Compartment

The reactor coolant system compartment, represented by the reactor vessel cavity, the two steam generator compartments, and the large vertical access tunnel, is the largest of the separate floodable compartments. With the exception of the pressurizer which is at a higher elevation, the principal components of the reactor coolant system are contained in this compartment.

The reactor vessel cavity and the adjoining equipment room are at the lowest level in the containment. The floor level of these rooms is at elevation 71′-6″. The floor level of the two steam generator compartments is at elevation 83′-0″. A portion of each compartment has low point areas at elevation 80′-0″.

The containment sump pumps are located in the equipment room at elevation 71′-6″. The arrangement for the floor drains from the two passive core cooling system compartments and the chemical and volume control system compartment provide a drain path for each compartment to the lowest level of containment (elevation 71′-6″) where the containment sump is located. Therefore, the source of the flooding in the reactor coolant system compartment is not limited to the components or systems contained within this compartment.

Any leakage that occurs within the containment drains by gravity to the elevation 71′-6″ equipment room. Reverse flow into the two passive core cooling system compartments and the chemical and volume control system compartment is prevented by redundant backflow preventers in each of the three compartment drain lines.

Flooding in any compartment of the containment is detected by the containment sump level monitoring system and the containment flood-up level instrumentation.

The containment sump level monitoring system consists of two seismically qualified level sensors in the containment sump. These sensors transmit the sump level indication to the main control room and the plant instrumentation system.

The plant instrumentation system monitors the rate of the sump level rise, calculates the leakage collection rate, and initiates the appropriate alarms in the main control room. A description of this leak detection system is provided in subsection 5.2.5.3.1.

Another indication of flooding in this compartment is provided by the containment flood-up level instrumentation consisting of three redundant Class 1E level sensor racks. Multiple discrete level signals are provided from the bottom of the reactor vessel cavity to the top of the vertical access tunnel. These level sensors transmit the containment sump water level indication to the main control room.

In the event that the source of the containment flooding can not be terminated, the water level in the reactor vessel cavity and the steam generator compartment continues to increase until the water source has been depleted or the leak has been isolated. The maximum level that could occur in the compartment from all of the water which is available in containment is elevation 108′-10″.

Since the reactor coolant system compartment contains no active safe shutdown components below the maximum flood-up level, the flooding of this compartment has no impact on safe shutdown capability.

Passive Core Cooling System Compartments

The PXS-A and PXS-B compartments, located in the southeast and northeast quadrants of the containment, primarily contain components associated with the passive core cooling system. The safe shutdown related components of the passive core cooling system located in these two compartments are redundant and essentially identical. One set of the redundant equipment is located in each of the two separate compartments.

The redundant passive core cooling system components located in these two compartments provide coolant to the reactor vessel from the two core makeup tanks, the two accumulators, and the in-containment refueling water storage tank via two independent and redundant direct vessel injection lines.

Each passive core cooling system compartment contains a parallel set of normally closed, air operated, core makeup tank isolation valves that receive actuation signals to open during a safe shutdown operation. These valves are approximately 10 feet above the floor level of the passive core cooling system compartments and 26 feet above the floor of the reactor vessel cavity.

Each passive core cooling system compartment also contains one normally open accumulator isolation valve and one normally open in-containment refueling water storage tank isolation valve. These valves do not have to be repositioned during a safe shutdown operation and a coincident flooding event.

In addition, each passive core cooling system compartment contains four passive core cooling system containment recirculation subsystem isolation valves. A normally closed, squib valve is

located in each of two parallel flow paths. One of the lines includes a check valve in series with the squib valve. The other line includes a normally open, motor-operated valve in series with the squib valve. The squib valve and motor-operated valves are opened on a low in-containment refueling water storage tank level signal to provide a redundant flow path from the flooded reactor/steam generator compartments to the reactor vessel. One set of these redundant containment recirculation subsystem isolation valves is required to open to provide a redundant recirculation flow path to the reactor vessel. In the unlikely event that one of the two passive core cooling system compartments were to be flooded, the set of recirculation valves in the other, unflooded, compartment could be opened. Note that these squib valves are qualified to operate after being flooded.

The design bases for this system are described in Section 6.3. The passive core cooling system is designed to perform its safety functions in the unlikely event of the most limiting single failure occurring coincident with any design basis event. For example, a direct vessel injection line could break in one of the two passive core cooling system compartments, thus preventing the core makeup tank and the accumulator located in the compartment from delivering borated water to the reactor vessel. A coincident single failure in the other passive core cooling system compartment would prevent only one of the two parallel injection paths from opening. This series of events would not prevent the passive core cooling system from performing its safety function.

The maximum flooding rate to either of these passive core cooling system compartments would occur on a postulated LOCA of one of the eight inch direct vessel injection lines at a location inside one of the two compartments. This postulated rupture would result in direct blowdown from the reactor coolant system to the compartment as well as blowdown of the associated core makeup tank and accumulator. The resulting flooding in one of two passive core cooling system compartments would not prevent the passive core cooling system from performing its safe shutdown function.

Another postulated LOCA, that would cause rapid flooding in the PXS-B compartment, is a rupture of the 12 inch normal residual heat removal system line. This line is routed from one of two reactor coolant system hot legs to a containment penetration in the PXS-B compartment.

The evaluation of containment flooding events is also concerned with non-LOCA flooding events. The maximum flooding rate to either of the passive core cooling system compartments, for a non-LOCA event, would be based on a postulated rupture of one of the two in-containment refueling water storage tank lines or a postulated rupture of one of the two accumulator injection lines.

A 10-inch line is routed from the in-containment refueling water storage tank to the PXS-A compartment and a 10-inch line is routed to the PXS-B compartment. The driving head from a full in-containment refueling water storage tank to either of these two compartments is approximately 35 feet. A rupture in one of these lines would result in flooding of the associated passive core cooling system compartment and the reactor coolant system compartment via the normal drain path or by overflowing the passive core cooling system compartment.

The 8-inch accumulator injection lines are routed from the accumulators to the 8-inch direct vessel injection lines. A rupture of either of these two injection lines at a point upstream of the two series

reactor coolant system pressure boundary check valves would result in the blowdown of the accumulator to the associated compartment. The water level attained in this case would be limited to the water volume of the accumulator. The water level would not reach the level of the core makeup tank isolation valves.

The total flood-up of either the PXS-A or PXS-B compartments from any source of water is acceptable and does not prevent the passive core cooling system from performing its required safe shutdown function.

The PXS-A and the PXS-B compartments are physically separated and isolated from each other by a structural wall so that flooding in one compartment can not cause flooding in the other compartment. They are located below the maintenance floor level which is at elevation 107′-2″. A curb is provided around openings that penetrate through the maintenance floor into these compartments from the elevation 107′-2″ floor level.

There are several HVAC ducts, cable trays, and pipes that penetrate the maintenance floor into the passive core cooling system compartments. These penetrations are properly protected to prevent leakage into the passive core cooling system compartments.

The floor drains for these two compartments are located at elevation 84′-6″. Reverse flow through the floor drains is blocked by redundant, safety-related backflow preventers in the drain lines.

When the flooding rate exceeds the ability of the floor drain lines to drain the water from the compartment, or in the event that the floor drain line is blocked, the water level in that compartment increases to the entrance curb elevation.

Should the flooding continue, the water overflows from that compartment to the maintenance floor at elevation 107′-2″. The water overflowing to this level would immediately drain to the reactor coolant system compartment via the vertical access tunnel. There is no curb at the entrance to the vertical access tunnel; therefore, water on the maintenance floor (elevation 107′-2″) flows freely into the reactor coolant system compartment. For LOCA events, flooding via this path continues to a level above the reactor coolant system cold legs.

If the leakage rate into PXS-A or PXS-B were not excessive, the compartment drain lines would prevent significant flood-up in that compartment. Consequently, the flooding of the components could be prevented for postulated flooding events of limited duration and flowrates less than the drain line capacity.

The flowrate from the compartments is a function of the water height in the PXS compartments and the water height in the reactor coolant system compartment. The differential head between the two water levels establishes the flowrate from the compartment.

The draining of these compartments initiates flooding of the reactor vessel cavity and the adjoining cavity equipment room. If the operator does not terminate the leak, action is taken to shut down the reactor.

If the flooding rate is not greater than the compartment drain line capacity, the large volume of the reactor vessel cavity and the adjoining equipment room provides additional time for the operator

to identify the source of leakage before any significant flooding occurs in the compartments containing the passive core cooling system equipment.

Should the flooding continue, the water level eventually reaches the steam generator compartment floor at elevation 83′-0″. The large floor area of the two steam generator compartments and the vertical access tunnel provides additional volume for flood-up and reduces the rate of level increase.

The containment isolation valves in these two passive core cooling system compartments are located above elevation 95′-0″, but below the maximum flood-up level. The PXS-A compartment contains one normally closed, motor operated, spent fuel pool cooling system containment isolation valve. The PXS-B compartment contains four normally closed, motor operated, normal residual heat removal system containment isolation valves. These containment isolation valves are not required to operate for safe shutdown and they do not fail open as a result of compartment flooding. Also, there are redundant outside containment isolation valves for each line that penetrates the containment boundary.

Chemical and Volume Control System Compartment

The majority of the components associated with the chemical and volume control system are located inside the containment in a separate compartment in the north quadrant of the containment below elevation 107′-2″.

There are several HVAC ducts, cable trays, and pipes that penetrate the maintenance floor into the chemical and volume control system compartment. These penetrations are properly protected to prevent leakage around the ducts into the chemical and volume control system compartment. The entrance curb elevation for the chemical and volume control system compartment is lower than the PXS-A and B compartment curbs to preferentially flood the chemical and volume control system compartment.

A single floor drain line is routed from this compartment to the containment sump at elevation 71′-6″. Reverse flow from the containment sump to this compartment is prevented by redundant, safety-related backflow preventers in the drain lines.

In the event that the single drain line were to be blocked, the water level in the chemical and volume control system compartment would flood to the level of the entrance curb elevation and would over flow to the maintenance floor at elevation 107′-2″. The water overflowing to this level would drain to the reactor coolant system compartment via the vertical access tunnel. There is no adverse effect on safe shutdown of the plant from flooding of the chemical and volume control system compartment.

The fire protection system and the demineralized water transfer and storage system are open-cycle systems that enter the containment. During plant operation, the containment piping for these systems is isolated by containment isolation valves and is not a potential flooding source. These systems are not open systems as defined in Bulletin 80-24 (one that has an essentially unlimited source).

3.4.1.2.2.2 Auxiliary Building Flooding Events

General

The AP1000 auxiliary building contains radiologically controlled areas and nonradiologically controlled areas which are physically separated by 2 and 3 foot structural walls and floor slabs. These structural barriers are designed to prevent flooding across the boundary between these areas by locating penetrations for piping and HVAC duct above maximum flood levels, or by sealing these penetrations. Process piping penetrations between the radiologically controlled areas and nonradiologically controlled areas are embedded in the wall or are welded to a steel sleeve in the wall. Electrical penetrations between the radiologically controlled areas and nonradiologically controlled areas are located above the maximum flood level. Electrical penetrations subject to the effects of the local build up of water on floors above the maximum flood level are also sealed.

For example, flooding in the auxiliary building at elevation 66′-6″ of the radiologically controlled area would not cause flooding in the nonradiologically controlled areas since the two areas are completely separated by a three foot thick structural wall. In the non-radiologically controlled area (non-RCA) of the auxiliary building, the four Class 1E electrical divisions are separated by 3-hour fire barriers. Portions of these fire barriers also serve as flood barriers.

- **Nonradiologically Controlled Areas**

  The safe shutdown systems and components that are located in the nonradiologically controlled area are associated with the protection and safety monitoring and Class 1E dc system, and containment isolation. The safe shutdown components associated with the protection and safety monitoring system are the instrumentation and control (I&C) cabinets located in the nonradioactive controlled area on level 3 (elevation 100′-0″). The safe shutdown components associated with the Class 1E dc system are the Class 1E batteries on level 1 (elevation 66′-6″) and level 2 (elevation 82′-6″) and dc electrical equipment also on level 2.

  The nonradiologically controlled areas of the auxiliary building are designed to provide maximum separation between the mechanical and electrical equipment areas. This separation prevents the propagation of leaks from the piping areas and the mechanical equipment areas to the Class 1E electrical and Class 1E I&C equipment rooms.

  The major piping compartments in the nonradiologically controlled area are the main steam isolation valve compartments on levels 4 and 5 (elevations 117′-6″ and 135′-3″, respectively) and the valve/piping penetration compartment on level 3 (elevation 100′-0″). The mechanical equipment rooms in the nonradiologically controlled area are the HVAC compartments on levels 4 and 5.

  Drain lines are provided in each of the piping and mechanical equipment compartments which drain to the turbine building drain tank. Leakage from postulated pipe ruptures in these compartments will drain to the turbine building.

- **Radiologically Controlled Areas**

  The safe shutdown components located in radiologically controlled areas (RCA) are primarily containment isolation valves which are located near the containment vessel and above elevation 82′-6″. These containment isolation valves are located above the maximum flood level for this area. They are required to either close or remain closed during a safe shutdown operation.

The evaluation of potential flooding within the radiologically and nonradiologically controlled areas of the auxiliary building is performed on a floor-by-floor basis as described below.

Auxiliary Building Level 1 (Elevation 66′-6″)

- **Nonradiologically Controlled Area**

  Level 1 of the nonradiologically controlled area has five individual rooms that contain Class 1E batteries: four divisional (A, B, C, and D) Class 1E battery rooms and one Class 1E spare battery room. The doors are not water tight.

  The primary line of defense for level 1 is to exclude fluid systems and their associated piping from this area. The only fluid systems in level 1 are the potable water and fire protection systems. Potable water is used for battery washdown and the emergency eye wash/shower facilities. The maximum nominal diameter of potable water piping in this area is 1 inch; therefore, it is excluded from consideration as a source of flooding.

  The potential for flooding on level 1 is limited to fire fighting activities. The seismically qualified fire protection system piping routed through levels 1, 2, 3, and 4 is the only piping in this area that is greater than 1 inch in diameter.

  Fire fighting activities in levels 1, 2, 3, or 4 would contribute to flooding in level 1. The drain lines, stairwells, and the elevator shaft direct the water from fire fighting activities down to the auxiliary building nonradiologically controlled area sump located on level 1.

  Fire fighting in these five battery rooms is accomplished by manual means from two fire hose stations located adjacent to the two stairwells. The maximum flowrate to this area from the two hose stations is assumed to be 250 gpm.

  A limited supply of water is initially provided to the fire protection system standpipe fire hose stations (See subsection 9.5.1) from the passive containment cooling system storage tank. A nominal volume of 18,000 gallons is provided for the fire protection system. A volume of 42,000 gallons is conservatively assumed; this is the volume in the tank between the elevations of the fire protection system inlet and the tank overflow. In the event that both fire hose stations are used to fight a fire in one of the five battery rooms, the maximum water depth would be less than 12 inches, assuming that the water could propagate into all rooms on this level. This maximum water depth is substantially below the terminal height on the first row of batteries which is located approximately 30 inches above the floor.

Since a limited supply of fire water is provided, inadvertent initiation of the fire protection system can not exceed the flooding levels described above. Operator action to stop inadvertent water flow from the fire protection system is expected to limit flooding to only a small fraction of this water supply.

Structural walls, drain line routing, and raised platforms prevent leakage that may occur in piping or mechanical areas on levels 4 and 5 from propagating to the electrical areas on levels 1, 2, 3, or 4.

Dual sump pumps and water level sensors are also provided in the sump on level 1. The level sensors transmit water level indication to the main control room and the plant control system. Level alarms alert the operator to take corrective action.

The sump pumps are sized to remove approximately 250 gpm (with two pumps operating) based on a maximum flow from two fire hose stations of 250 gpm. The discharge of these pumps is directed to the turbine building drain tank of the waste water system (WWS) located on elevation 89′-0″ of the turbine building as described in subsection 9.2.9. The discharge line into the tank is provided with a standpipe to prevent siphoning back to the auxiliary building nonradiologically controlled area sump. These sump pumps and level sensors are not required to maintain safe shutdown capability.

- **Radiologically Controlled Area**

  There are no safe shutdown components located on level 1 of the radiologically controlled area. The radiologically controlled area of the auxiliary building is subject to flooding from a variety of potential sources including the component cooling water, central chilled water, hot water, spent fuel pool cooling, normal residual heat removal system, and chemical and volume control system, as well as various tanks. Most of the piping associated with these systems is above level 1; however, the flow from any postulated rupture in the radiologically controlled area will eventually flood level 1. The principal flow paths to level 1 are the vertical pipe chase and the floor gratings provided in the elevator lobbies on levels 2 and 3. Other flow paths include the floor drain system, the stairwell, and the elevator shaft.

  The auxiliary building radiologically controlled area sump is located on level 1 with dual sump pumps and water level sensor provided in the sump. The level sensor transmits water level indication to the main control room and the plant control system. High level alarms alert the operator to take corrective action.

  The sump pumps are sized to remove approximately 250 gpm (with two pumps operating) based on a maximum flow from two fire hose stations of 250 gpm. The discharge of these pumps is directed to the waste holdup tanks of the liquid radioactive waste system as described in subsection 11.2. These sump pumps and level sensor are not required to maintain safe shutdown capability.

  For the component cooling water and central chilled water systems, the maximum flooding volume is bounded by the system volume plus a reasonable period of makeup. This includes any discharges from the pressure relief valves on the cooling water lines to the RNS heat

exchangers. Flow from these two valves is also directed to the auxiliary building sump through the WWS. For the spent fuel pool cooling system, the maximum flooding volume is limited to the volume of water above the spent fuel pool strainer plus a reasonable period of makeup. This flooding volume is approximately equal to that of the component cooling water and chilled water systems above.

The normal residual heat removal system is operated only when the plant is shutdown. Since it is not normally operating, it is evaluated as a moderate-energy system. Flooding is determined based on the maximum flowrate from a through-wall crack in a 8 inch normal residual heat removal system discharge line. Assuming that the leakage is detected and isolated within 30 minutes after initiation, the maximum flooding volume is approximately equal to those above.

Flooding due to a break in the high-energy chemical and volume control system makeup pump discharge line is bounded by the normal residual heat removal system through-wall crack.

Flow from the postulated break spreads throughout the level 1 rooms and corridor via flow under doors and interconnecting floor drains if the auxiliary building radiologically controlled area sump pumps are inoperable. The maximum flood level in the area, for any of the cases above, is less than 12 inches. This flooding has no impact on safe shutdown since there are no components on level 1 required for safe shutdown.

Normal residual heat removal systems components with systems important missions are expected to remain functional following the flooding event since the pump motors and valve operators are above the maximum flood level if the flood source is not a break in the normal residual heat removal system piping itself.

Flow from a tank rupture in one of the tank rooms will initially flood the tank room, and begin to flow to the auxiliary building radiologically controlled area sump via floor drains. If the sump pumps are inoperable, the tank volume floods the balance of level 1 via the interconnecting floor drains. The maximum flood level for this event is less than for the piping failures discussed above.

Auxiliary Building Level 2 (Elevation 82′-6″)

- **Nonradiologically Controlled Area**

  Level 2 of the nonradiologically controlled area has two Class 1E battery rooms, four divisional Class 1E dc electrical equipment rooms, and one Class 1E reactor coolant pump trip switchgear room. The doors to these rooms are not water tight.

  Level 2 contains an arrangement of fire protection and potable water piping similar to level 1.

  The potential for flooding on this level is limited to fire fighting activities. Fire fighting in these rooms is accomplished by manual means from two fire hose stations located adjacent to

the two stairwells. The maximum flowrate to this area from the two hose stations is assumed to be 250 gpm.

The drains, elevator shafts, and stairwells drain water spilled on this level to level 1. Therefore, no significant accumulation of water occurs on level 2.

- **Radiologically Controlled Area**

The radiologically controlled area on level 2 contains a few containment isolation valves. The horizontal pipe chase at elevation 92′-6″ contains two normally closed normal residual heat removal system isolation valves. One spent fuel pool cooling system containment isolation valve is located, above 92′-6″, in the adjacent vertical pipe chase. The area on the north side of the lower annulus contains two chemical and volume control system and two liquid radwaste automatically operated containment isolation valves above elevation 82′-6″. These valves are required to close or remain closed during a safe shutdown operation.

Two chemical and volume control system valves used to isolate the chemical and volume control system makeup pump suction from the demineralized water storage tank are located in the makeup pump compartment at 82′-6″. These safety-related valves close or remain closed to prevent boron dilution events. They are not required for safe shutdown.

Potential sources of flooding for this area include the chemical and volume control system and the fire protection system, including an automatic suppression system in the CVS makeup pump room. Flow from a component rupture or from fire fighting activities on level 2 drains to level 1 as described below.

To protect the above valves from flooding, the makeup pump compartment at elevation 82′-6″ drains, via the floor grating located in the corridor adjacent to the stairwell, directly to elevation 66′-6″. Flooding in the lower annulus drains directly to elevation 66′-6″ via the floor grating and various openings to the tank rooms. The stairwell and elevator shaft on the east wall are additional flow paths to level 1. The horizontal pipe chase at elevation 92′-6″ drains under the door directly to elevation 66′-6″ via the vertical pipe chase. As a result of these drain paths, there is no significant accumulation of water in the makeup pump compartment, lower annulus or the horizontal pipe chase from any postulated pipe ruptures. The containment isolation valves are above the maximum flood level in these areas. The chemical and volume control system makeup pumps and the normal residual heat removal valves in the valve compartment are nonsafety-related defense-in-depth equipment and are expected to remain functional following the flooding event since the pump motors and valve operators are above the calculated flood level of 6 inches.

Auxiliary Building Level 3 (Elevation 100′-0″)

- **Nonradiologically Controlled Area**

Level 3 of the nonradiologically controlled area includes the remote shutdown room, one reactor coolant pump trip switchgear room, four divisional Class 1E I&C rooms,

one equipment room, and the valve/piping penetration room. The division A, B, C and D I&C rooms and the electrical room also include containment electrical penetrations. The doors are not water tight.

The level 3 Class 1E and non-Class 1E electrical areas contain only fire protection system piping. Fire hose stations are provided near each of the two stairwells and normally dry fire protection piping, supplied from the passive containment system tank, serves the preaction sprinkler system in the non-1E equipment/penetration room. The potential for flooding in the electrical areas on this level is limited to fire fighting activities. The maximum flowrate to this area from either automatic or manual fire fighting activities is assumed to be 250 gpm. The floor drains, stairwells, and elevator shaft drain water spilled on this level down to level 1. Therefore, no significant accumulation of water occurs in this area.

The valve/piping penetration room on level 3 is physically separated from the electrical rooms. The valve/piping penetration room contains automatically actuated containment isolation valves for the steam generator blowdown system and the hydrogen line in the chemical and volume control system. Access to this room is from the turbine building. The access door and drain lines provided in this room drain from the auxiliary building to the turbine building. Maximum postulated flood level for this room is less than 36 inches. The containment isolation valves in the area are located above this maximum flood level.

- **Radiologically Controlled Area**

  There are no safe shutdown components located on level 3.

  Potential sources of flooding for this area include the normal residual heat removal system, the component cooling water system, the effluent monitor tanks and the fire protection system, including an automatic suppression system in the rail car bay. Flow from a component rupture or from fire fighting activities on level 3 drains directly to level 1.

Auxiliary Building Level 4 (Elevation 117′-6″)

- **Nonradiologically Controlled Area**

  Level 4 of the nonradiologically controlled area includes the main control room, one divisional Class 1E penetration room, one non-Class 1E electrical penetration room, two main steam isolation valve compartments, and one mechanical equipment room.

  The doors to these rooms are not water tight. There are no doors from the main steam isolation valve compartments to the Class 1E electrical areas. The main steam isolation valve compartments are only accessible from the turbine building at elevation 135′-3″. The mechanical equipment room is only accessible from the turbine building at elevation 117′-6″.

  The potential for flooding Class 1E electrical areas on this level is limited to fire fighting activities. The Class 1E electrical penetration room and main control room are accessible from a hose station near the east stairwell. While the main control room kitchen and restroom are provided with potable water, the lines are 1 inch and smaller, and are not evaluated for pipe ruptures.

Fire fighting in the control room is done manually using portable extinguishers or a fire hose from a hose station in the east corridor. In the event that a hose is brought into the main control room through the east corridor access doors, water accumulation is limited by flow through the access doors which are open. The threshold of the east corridor access door is at the elevation of the floor slab. Once in the corridor this flow drains, via floor drains, the stairwell and elevator shaft, to level 1. An emergency egress door and stairwell is located on the west end of the main control room, which leads down to the remote shutdown room. The threshold of the emergency egress door is flush with the raised portion of flooring in the main control room, which is approximately 14 inches above the east corridor entrance. Water being discharged in this area will flow through the porous raised flooring and flow back out the east access doors. The main control room has a normally closed floor drain which can be manually opened to drain water to the auxiliary building non-RCA sump at level 1. The drain paths prevent significant flooding of the adjacent rooms.

In the event of fire fighting activity in the non-Class 1E electrical penetration rooms, the accumulation of water is prevented by floor drains and flows through the stairwell and elevator shaft to level 1.

The mechanical equipment room contains containment isolation valves for the chilled water, compressed air, component cooling water, and passive core cooling (nitrogen) systems. Flooding in the mechanical equipment room due to fire fighting or piping ruptures is directed to the turbine building through the access door at elevation 117′-6″ or through floor drains to the turbine building. The maximum flood level for this room is 4 inches. The containment isolation valves in this area are located above this maximum flood level.

The main steam isolation valve compartments contain the main steam and main feedwater piping and their isolation valves. In the event of a pipe break or leak in the area, floor drains to the turbine building are provided. Structural walls and floors are designed to prevent flow of water to levels 1, 2, or 3. For larger flows, wall openings and pressure relief panels, located at floor elevation, open to drain the rooms to the turbine building. The maximum flood level for these rooms is less than 36 inches. The isolation valves in this area are located above this maximum flood level.

- **Radiologically Controlled Area**

  In the radiologically controlled area, there are six containment isolation valves on level 4. Five of these are located in the vertical pipe chase. These are for the primary sampling system, spent fuel pool cooling system and containment air filtration system. The primary source of flooding in the vertical pipe chase is the spent fuel cooling line. Flow from this break will be directed through grating down to level 3 where water will flow under the door to the staging area and through floor drains to the auxiliary building RCA sump which limits the flood level to less than 7 inches. The containment isolation valves are located above the spent fuel cooling line and there are no other sources of flooding located above them. The other containment isolation valve for the containment air filtration system is located in a separate compartment adjacent to column line 5. The principal source of flooding for this area is fire fighting from a hose station located at elevation 107′-2″. Flow from this source will be directed under the door and through floor drains to the auxiliary building

radiologically controlled area sump which limits the flood level to less than 3 inches. No other safe shutdown equipment is located in this area.

Auxiliary Building Level 5 (Elevation 135′-3″)

- **Nonradiologically Controlled Area**

  Level 5 of the nonradiologically controlled area contains two mechanical HVAC equipment rooms and the upper portion of the two main steam isolation valve compartments. There is no safety-related equipment on level 5.

  The evaluation of the main steam isolation valve compartments is addressed in the discussion of level 4.

  Water from fire fighting, postulated pipe, or potable water storage tank (150 gallons) ruptures in the main mechanical HVAC equipment rooms drains to the turbine building via floor drains or to the annex building via flow under the doors. Therefore, no significant accumulation of water occurs in this room. Floor penetrations are sealed and a 6 inch platform is provided at the elevator and stairwell such that flooding in these rooms does not propagate to levels below.

  The mechanical room between the main steam isolation valve compartments at level 5 is accessed from the turbine building on the same level. This room is drained to the turbine building. In the event of fire fighting or postulated pipe ruptures, the accumulation of water is prevented by directing the flow to the drains or under the doors into the turbine building. Floor penetrations are sealed such that flooding in this area does not propagate to other areas of the auxiliary building.

- **Radiologically Controlled Area**

  Level 5 of the radiologically controlled area contains the fuel handling area operating deck, HVAC equipment and access rooms, the main equipment hatch staging area, and the component cooling water system valve room. The only safety-related equipment on level 5 are the compressed air tanks for the main control room emergency habitability system located in the main equipment hatch staging area.

  Over-filling of the spent fuel pool would flood the fuel handling area operating deck. The flooding flowrate is limited by the makeup capacity from the demineralized water or chemical and volume control systems. Accumulation of water in this area is prevented by floor drains and by flow to the stairwells and elevator shaft which drain to level 1. Spent fuel pool cooling is not adversely affected by this event. There is no safe shutdown equipment in this area. The component cooling water system valves with the regulatory treatment of nonsafety-related system important missions located in the component cooling water system valve room which support the normal residual heat removal system, are located well above the maximum flood level for this area and are expected to remain functional in a flooding event.

The shield building stairwell serves as a pipe chase for passive containment cooling system supply and return lines, drains for the passive containment cooling system valve room and passive containment cooling system air outlet shield plug, and a fire water line. Leakage from a crack in one of these lines flows down the stairwell to level 5, under the stairwell door to the HVAC equipment room, and then to the auxiliary building radiologically controlled area sump via floor drains or to the annex building. There is no significant accumulation in the stairwell or the equipment and access rooms. There is no safe shutdown equipment in this area. The passive containment cooling system supply and return line connections to the passive containment cooling system storage tank are above the minimum water level, thus a leak in these lines would not adversely affect the safe shutdown capability of the passive containment cooling system.

Water from fire fighting in the main equipment hatch staging area drains to the auxiliary building radiologically controlled area sump via floor drains, or to the annex building via flow under the roll-up door. Therefore, no significant accumulation of water occurs in this area.

Auxiliary Building Upper Annulus (Elevation 132′-3″)

This area serves as the air flow path for the passive containment cooling system. It is bounded by the seismic Category I shield building on the outside and the seismic Category I containment vessel on the inside. The floor has a curb on the outside with a flexible seal connected to the shield building. The curb and seal block communication with the middle annulus area, below. The outside wall of the annulus is provided with redundant safety-related drains to the yard drainage system.

The worst case flooding scenario is postulated as blockage of the nonsafety-related floor drains concurrent with inadvertent opening of a passive containment cooling system cooling water isolation valve. The maximum flood level is determined by the flow gradient to the operating drains. Maximum level will be approximately 2 feet. This level does not affect the capability of passive containment cooling system air cooling. No other safe shutdown equipment is affected. Passive containment cooling system operation or leakage is detected by sensors on the passive containment cooling system discharge line. During non-accident conditions the annulus is accessible to manually clear any drain blockage.

PCS Valve Room (Elevation 284′-10″)

This room contains three redundant safety-related valve trains for the passive containment cooling system water cooling subsystem. One train must open to provide the required containment cooling. The only source of flooding for this room is a through-wall crack in the passive containment cooling system piping. The worst crack location is in the 6 inch line between the valves and the flow control orifices. This leak is not isolable from the 756,700-gallon passive containment cooling system water storage tank above the valve room. Flow is by gravity.

Leakage will flow down to the landing at elevation 277′-2″ where the water will flow through floor drains or under doors to the upper annulus which is then discharged through redundant drains to the storm drain. There will be negligible water accumulation in the valve room. The

passive containment cooling system isolation valves are located above the maximum flood level in the valve room, so they remain operable.

Sensors in the valve room drain sump are provided for leak detection. An alarm is provided in the main control room to alert the operator to take corrective action if the level sensors detect an abnormal water level in the valve room. The leakage does not adversely affect containment or any other essential system.

3.4.1.2.2.3 Adjacent Structures Flooding Events

Turbine Building

The turbine building is subject to flooding from a variety of potential sources including the circulating water, service water, condensate/feedwater, component cooling water, turbine building cooling water, demineralized water and fire protection systems as well as the deaerator storage tank. Flow from any postulated ruptures above elevation 100′-0″ flows down to elevation 100′-0″ via floor grating and stairwells. Thus, there will be a negligible contribution from these sources to flooding of the auxiliary building compartments at elevations 135′-3″ and 117′-6″ via flow under doors. Auxiliary building flooding is bounded by the effects of postulated breaks in the compartments.

The bounding flooding source for the turbine building is a break in the circulating water piping which would result in flooding of the elevation 100′-0″ floor. Flow from this break runs out of the building to the yard through a relief panel in the turbine building west wall and limits the maximum flood level to less than 6 inches. The only area of the auxiliary building which interfaces with the turbine building at elevation 100′-0″ is the valve/piping penetration room. This room could be flooded via flow under the door or backflow through the drains, however the flood level would be less than postulated for a break in the valve/piping penetration room itself.

The waste water system (WWS) sump pumps located in the nonradiologically controlled area of the auxiliary building discharge to the turbine building drain tank. Backflow from the drain tank is prevented as described in subsection 3.4.1.2.2.2.

There is no safety-related equipment in the turbine building. The component cooling water and service water components on elevation 100′-0″, which provide the regulatory treatment of nonsafety-related systems important to support the normal residual heat removal system, are expected to remain functional following a flooding event in the turbine building since the pump motors and valve operators are above the expected flood level.

Annex Building

- **Nonradiologically Controlled Areas**

  The primary sources of flooding in the nonradiologically controlled areas of the annex building are the component cooling water, chilled water and fire protection systems. Water from postulated breaks above elevation 100′-0″ flows primarily through floor drains to the annex building sump that discharges to the turbine building drain tank. Alternate paths

include flows to the turbine building via flow under access doors at elevations 135′-3″ and 117′-6″ and flows down to elevation 100′-0″ via stairwells and elevator shaft. Water accumulation at elevation 100′-0″ is minimized by floor drains to the annex building sump and by flow under the access doors leading directly to the yard area. The floors of the annex building are sloped away from the access doors to the nuclear island in the vicinity of the access doors to prevent migration of flood water to the nonradiologically controlled areas of the nuclear island.

There is no safety-related equipment in the nonradiologically controlled area portion of the annex building. The main ac power system components with regulatory treatment of nonsafety-related systems important missions are located on elevation 117′-6″ in the electrical switchgear rooms, which are separated from potential flood sources. Water from manual fire fighting operations is collected by floor drains discharging to the annex building sump or down a hatch or stairwell to elevation 100′-0″. The non-Class 1E dc and UPS system (EDS) equipment with regulatory treatment of nonsafety-related systems important missions is located on elevation 100′-0″ in separate battery rooms. Water in one of these rooms due to manual fire fighting in the room is collected by floor drains to the annex building sump and by flow under the access doors leading directly to the yard area. This is not expected to affect functionality of equipment in the adjacent rooms.

- **Radiologically Controlled Areas**

  There is no safety-related equipment in the radiologically controlled area portion of the annex building. The primary sources of flooding in the radiologically controlled areas of the annex building are the component cooling water, chilled water and fire protection systems, including an automatic suppression system that protects the containment access corridor. Water from postulated breaks above elevation 100′-0″ drains through floor drains to the radioactive waste drain system sump in the radiologically controlled area of the auxiliary building or drains to elevation 100′-0″ via stairwells and equipment handling hatches or under access doors to the radiologically controlled area portion of the auxiliary building. Accumulated water at elevation 100′-0″ is minimized by floor drains discharging to the radioactive waste drain system sump or chemical waste tank in the auxiliary building. The contribution of water to the flooding of the radiologically controlled area portion of the auxiliary building is bounded by flooding events which could occur in the auxiliary building.

Radwaste Building

The potential sources of flooding in the radwaste building are the chilled water, hot water, and fire protection systems or from failure of one of the three waste monitor tanks. Flow from postulated breaks is directed to floor drains via a curb/sloped floor around the perimeter to drain to the radioactive waste drain system sump in the radiologically controlled area of auxiliary building. The contribution of water to flooding of the auxiliary building is bounded by flooding events which could occur in the auxiliary building. There are no safety-related systems or components or equipment with regulatory treatment of nonsafety-related systems important missions in the radwaste building.

Diesel Generator Building

The potential source of flooding in the diesel generator building is the fire protection system. There is no safety-related equipment in the diesel generator building. The diesel generator system which has regulatory treatment of nonsafety-related systems important mission has each diesel and associated auxiliaries in a separate compartment. Flooding due to a break in a fire water header is directed to the respective diesel generator building sump and subsequently pumped to the turbine building drain tank or is drained by gravity to the yard area under the access doors. The equipment in the adjacent diesel generator compartment should remain functional following the event.

3.4.1.3 Permanent Dewatering System

The need for a permanent dewatering system is site specific and is defined as discussed in subsection 3.4.3.

3.4.2 Analytical and Test Procedures

The AP1000 is designed so that the maximum water levels considered due to natural phenomena or internal flooding do not jeopardize the safety of the plant or the ability to achieve and maintain safe shutdown conditions. The analytical approach in the consideration of external and internal flooding events is described in subsection 3.4.1.2.

3.4.3 Combined License Information

The Combined License applicant referencing the AP1000 certified design will demonstrate that the site satisfies the interface requirements as described in Section 2.4. If these criteria cannot be satisfied because of site-specific flooding hazards, the Combined License applicant may propose protective measures as discussed in Section 2.4.

3.4.4 References

1. ANSI/ANS-56.11-1988, "Design Criteria for Protection against the Effects of Compartment Flooding in Light Water Reactor Plants."

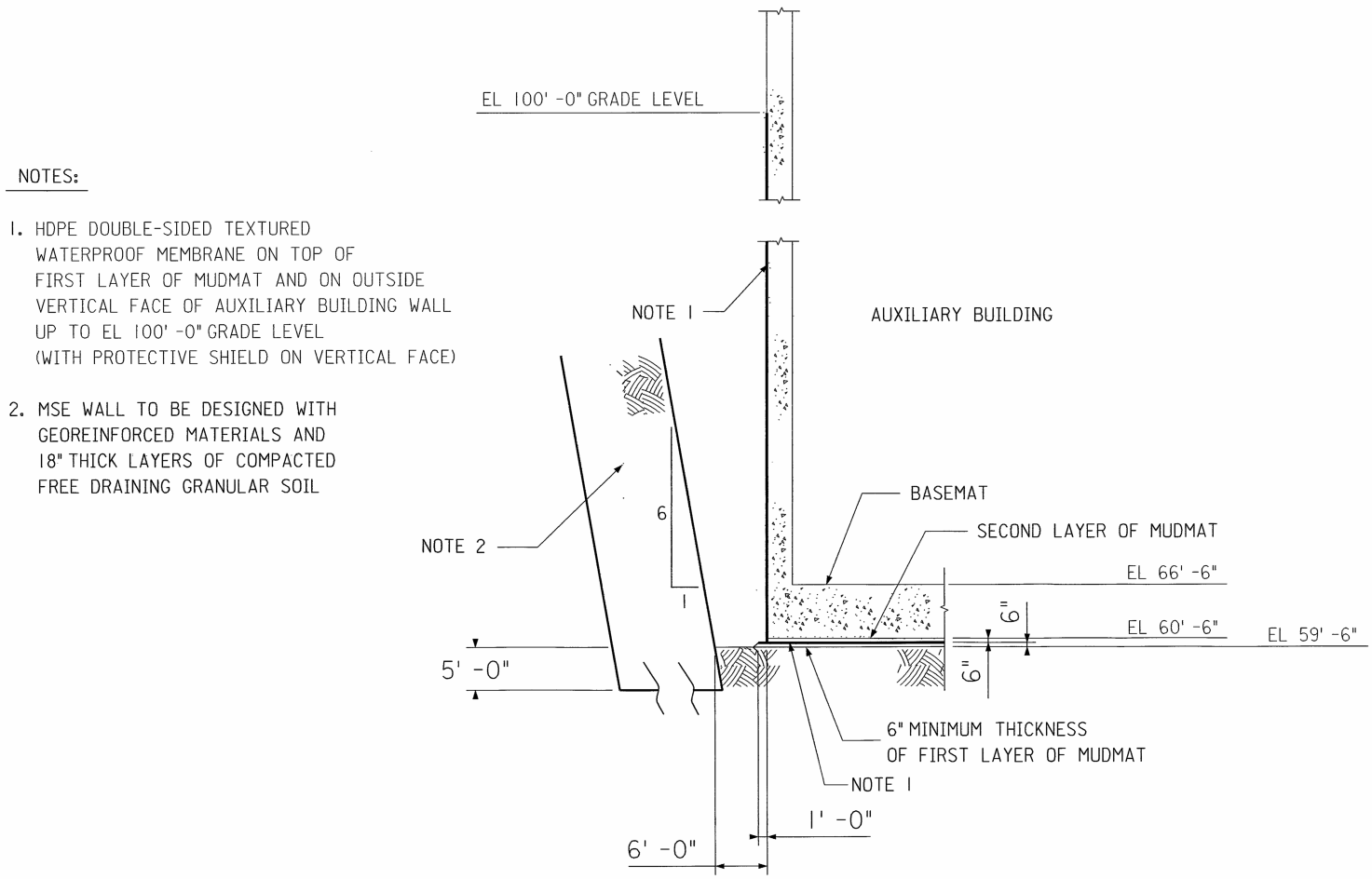

Figure 3.4-1

Typical Details of Nuclear Island Waterproofing Below Grade

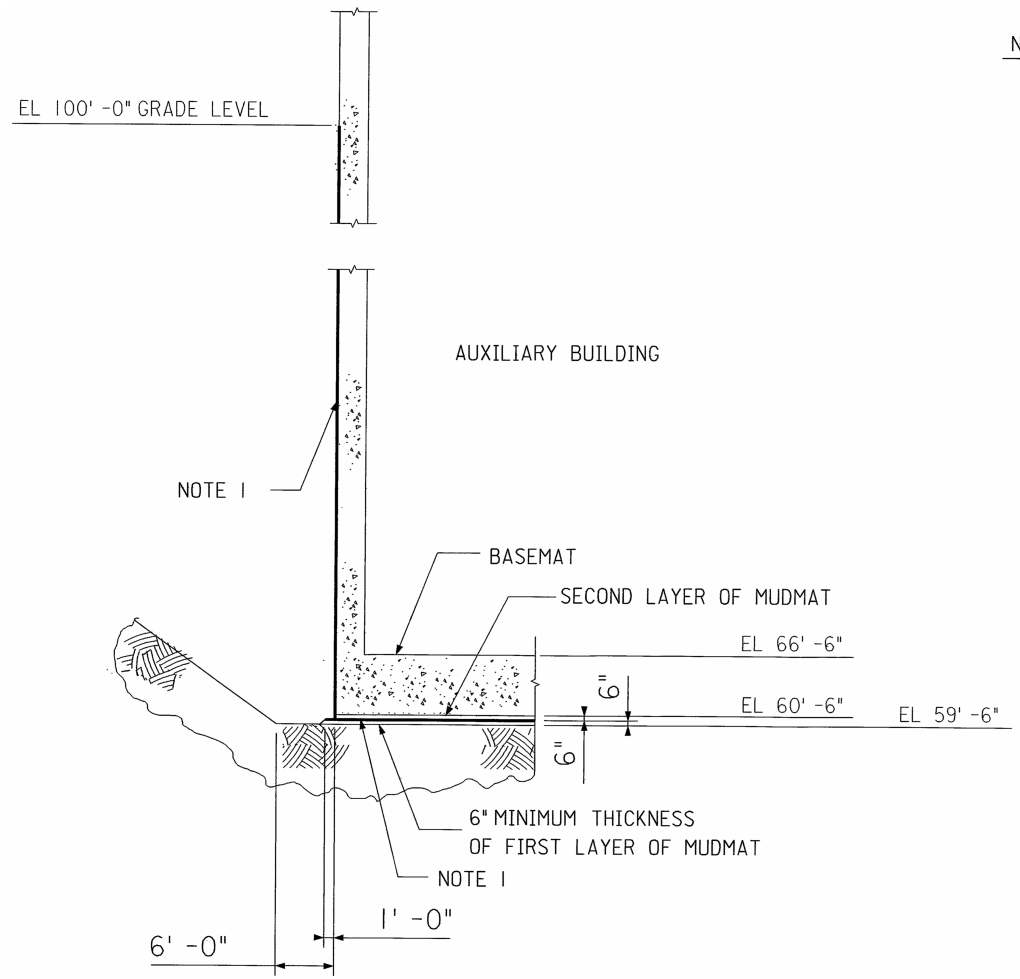

NOTES:

1. HDPE DOUBLE-SIDED TEXTURED WATERPROOF MEMBRANE ON TOP OF FIRST LAYER OF MUDMAT AND ON OUTSIDE VERTICAL FACE OF AUXILIARY BUILDING WALL UP TO EL 100' -0" GRADE LEVEL (WITH PROTECTIVE SHIELD ON VERTICAL FACE)

Figure 3.4-2

Typical Details of Nuclear Island Waterproofing Below Grade with Step Back

Figure 3.4-3 not used.

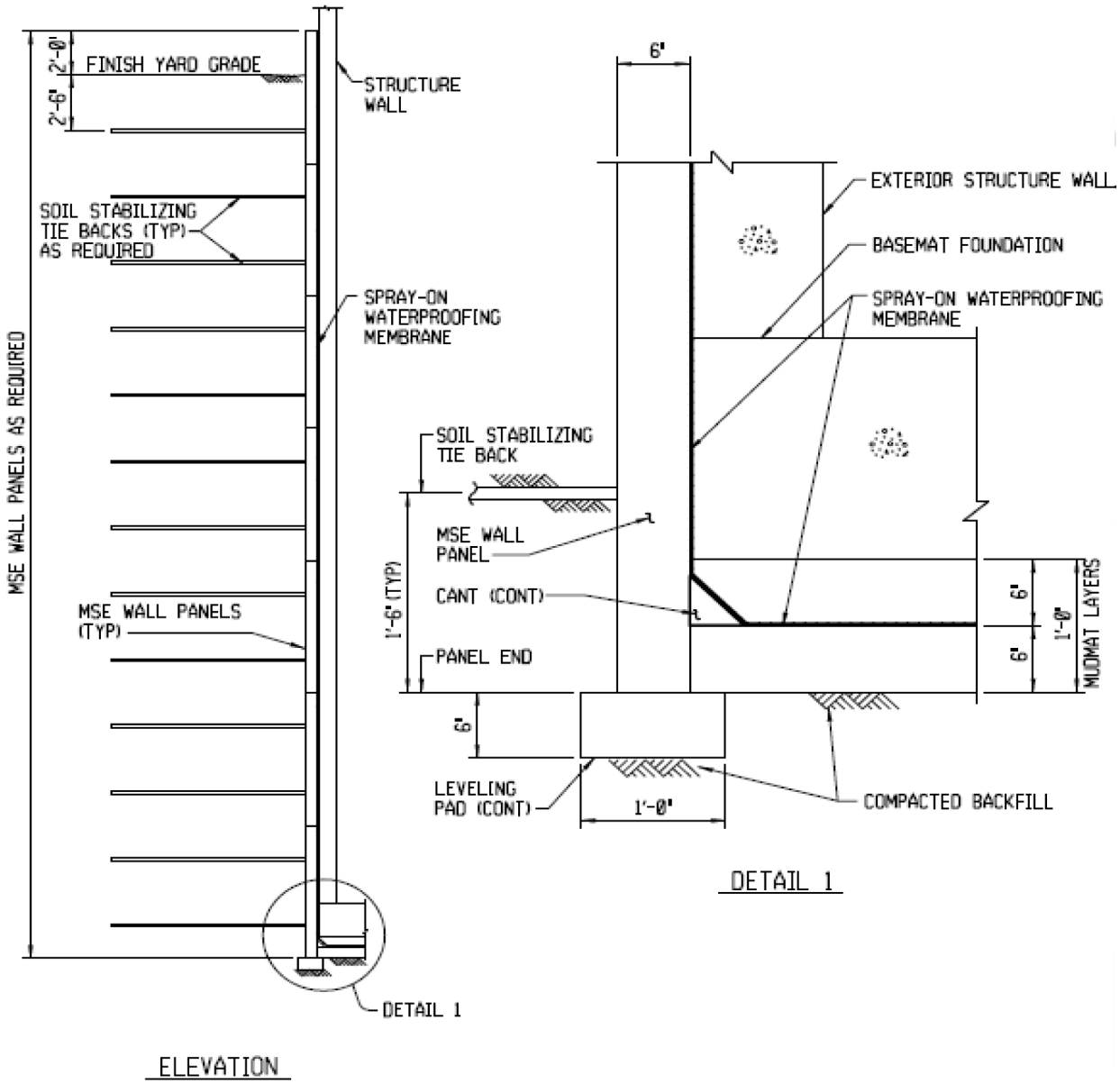

Figure 3.4-4

Typical Details of Membrane Corner Detail at Basemat and Exterior Wall