GE Nuclear Energy

Rev. 4
March 1997

ABWR Design Control Document

Design Control Document Table Of Contents

Effective Pages of the Design Control Document ..... Volume 1
Introduction to the Design Control Document ..... Volume 1
Tier 1, Section 1.0 Introduction ..... Volume 1
Tier 1, Section 2.0 Certified Design Material for ABWR Systems ..... Volume 1
Tier 1, Section 3.0 Additional Certified Design Material ..... Volume 2
Tier 1, Section 4.0 Interface Requirements ..... Volume 2
Tier 1, Section 5.0 Site Parameters ..... Volume 2
Tier 2, Chapter 1 Introduction and General Plant Description of Plant ..... Volume 3
Tier 2, Chapter 2 Site Characteristics ..... Volume 3
Tier 2, Chapter 3 Design of Structures, Conponents, Equipment and Systems ..... Volumes 4,5,6
Tier 2, Chapter 4 Reactor ..... Volume 7
Tier 2, Chapter 5 Reactor Coolant System and Connected Systems ..... Volume 7
Tier 2, Chapter 6 Engineered Safety Features ..... Volume 8
Tier 2, Chapter 7 Instrumentation and Control Systems ..... Volume 9
Tier 2, Chapter 8 Electric Power ..... Volume 9
Tier 2, Chapter 9 Auxiliary Systems ..... Volumes 10, 11, 12
Tier 2, Chapter 10 Steam and Power Conversion System ..... Volume 13
Tier 2, Chapter 11 Radioactive Waste Management ..... Volume 13
Tier 2, Chapter 12 Radiation Protection ..... Volume 13
Tier 2, Chapter 13 Conduct of Operations ..... Volume 14
Tier 2, Chapter 14 Intial Test Program ..... Volume 14
Tier 2, Chapter 15 Accident and Analysis ..... Volume 15
Tier 2, Chapter 16 Technical Specifications ..... Volumes 16, 17, 18, 19
Tier 2, Chapter 17 Quality Assurance ..... Volume 20
Tier 2, Chapter 18 Human Factors Engineering ..... Volume 20
Tier 2, Chapter 19 Response to Severe Accident Policy Statement ..... Volumes 21, 22, 23
Tier 2, Chapter 20 Question and Resonse Guide ..... Volumes 24, 25
Tier 2, Chapter 21 Engineering Drawings ..... Volumes 26 through 31

Figure No.	Title	Page No.
	VOLUME 1	
1.2-2	Reactor Building, Arrangement Elevation, Section A-A	1
1.2-2a	Reactor Building, Arrangement Elevation, Section B-B	2
1.2-3	Upper Drywell, Arrangement Elevation, Section A-A	3
1.2-3a	Upper Drywell, Arrangement Elevation, Section B-B	3
1.2-3b	Lower Drywell, Arrangement Elevation, Section A-A	4
1.2-3c	Wetwell, Arrangement Elevation, Sections A-A & B-B	5
1.2-4	Reactor Building, Arrangement Plan at Elevation -8200 mm	6
1.2-5	Reactor Building, Arrangement Plan at Elevation -1700 mm	7
1.2-6	Reactor Building, Arrangement Plan at Elevation 4800/8500 mm	8
1.2-8	Reactor Building, Arrangement Plan at Elevation 12300 mm	9
1.2-9	Reactor Building, Arrangement Plan at Elevation 18100 mm	10
1.2-10	Reactor Building, Arrangement Plan at Elevation 23500 mm	11
1.2-11	Reactor Building, Arrangement Plan at Elevation 27200 mm	12
1.2-12	Reactor Building, Arrangement Plan at Elevation 31700/38200 mm	13
1.2-13a	Drywell, Arrangement Plan at Elevation 12300 mm	14
1.2-13b	Drywell, Arrangement Plan at Elevation 15600 mm	15
1.2-13c	Drywell, Arrangement Plan at Elevation 18100 mm	16
1.2-13d	Drywell Steel Structure at Elevation 18100 mm	17
1.2-13e	Lower Drywell, Arrangement Plan at Elevation -6600 to -1850 mm	18
1.2-13f	Lower Drywell, Arrangement Plan at Elevation -1850 to 1750 mm	19
1.2-13g	Lower Drywell, Arrangement Plan at Elevation 1750 to 4800 mm	20
1.2-13h	Lower Drywell, Arrangement Plan at Elevation 4800 to 6700 mm	21
1.2-13i	Wetwell, Arrangement Plan at Elevation -8200 mm	22
1.2-13j	Wetwell, Arrangement Plan at Elevation -1700 mm	23
1.2-13k	Wetwell, Arrangement Plan at Elevation 4800 mm	24
1.2-14	Control and Service Building, Arrangement Elevation, Section A-A	25
1.2-15	Control and Service Building, Arrangement Elevation, Section B-B	26
1.2-16	Control Building, Arrangement Plan at Elevation -8200 mm	27
1.2-17	Control and Service Building, Arrangement Plan at Elevation -2150 mm	28
1.2-18	Control and Service Building, Arrangement Plan at Elevation 3500 mm	29
1.2-19	Control and Service Building, Arrangement Plan at Elevation 7900 mm	30
1.2-20	Control and Service Building, Arrangement Plan at Elevation 12300 mm	31
1.2-21	Control and Service Building, Arrangement Plan at Elevation 17150 mm	32
1.2-22	Control and Service Building, Arrangement Plan at Elevation 22200 mm	33
1.2-23a	Radwaste Building at Elevation -1500 mm	33.1
1.2-23b	Radwaste Building at Elevation 4800 mm	33.2
1.2-23c	Radwaste Building at Elevation 12300 mm	33.3
1.2-23d	Radwaste Building at Elevation 21000 mm	33.4
1.2-23e	Radwaste Building, Section A-A	33.5
1.2-24	Turbine Building, General Arrangement at Elevation 5300 mm	34

Figure No.	Title	Page No.
1.2-25	Turbine Building, General Arrangement at Elevation 12300 mm	35
1.2-26	Turbine Building, General Arrangement at Elevation 20300 mm	36
1.2-27	Turbine Building, General Arrangement at Elevation 30300 mm	37
1.2-28	Turbine Building, General Arrangement, Longitudinal Section A-A	38
1.2-29	Turbine Building, General Arrangement, Section B-B	39
1.2-30	Turbine Building, General Arrangement, Section C-C	40
1.2-31	Turbine Building, General Arrangement, Section D-D	41
1.7-1	Piping and Instrumention Diagram Symbols (shts. 1-2)	42
3H.1-28	Configuration of RPV Pedestal	44
3H.1-29	Rebar Arrangement of F/P Girder and Slab (1/2)	45
3H.1-30	Containment Structure Wall Reinforcement	46
3H.1-31	Containment Structure Opening Reinforcement	47
3H.1-32	Containment Structure Opening Reinforcement	48
3H.1-33	Containment Structure Top Slab Reinforcement	49
3H.1-34	Reactor Building Foundation Reinforcement (sh. 1)	50
3H.1-35	Reactor Building Foundation Reinforcement (sh. 2)	51
3H.1-36	Diaphragm Floor Reinforcement	52
3H.1-37	List of Seismic Wall Sections	53
3H.2-21	Control Building Floor Plan at Elevation -8200 mm	54
3H.2-22	Control Building Framing Plan at Elevation -2150 mm	55
3H.2-23	Control Building Framing Plan at Elevation 3500 mm	56
3H.2-24	Control Building Framing Plan at Elevation 7900 mm	57
3H.2-25	Control Building Framing Plan at Elevation 12300 and 13100 mm	58
3H.2-26	Control Building Framing Plan at Elevation 17150 and 18250 mm	59
3H.2-27	Control Building Framing Plan at Elevation 22200 and 22750 mm	60
3H.2-28	Control Building Section	61
3H.2-29	Control Building Section and Details	62
3H.2-30	Control Building Details	63
3H.3-11	Radwaste Building, Reinforced Concrete Basemat	64
3H.3-12	Radwaste Building, Structural Steel Framing Plan, Typical Floor	65
3H.3-13	Radwaste Building, Structural Steel Framing Plan, Elevation 28000 mm	66
3H.3-14	Radwaste Building, Section A-A	67
3H.3-15	Radwaste Building, Exterior Walls Sections	68
3H.3-16	Radwaste Building, Sections and Details	69
4.6-8	Control Rod Drive System P&ID (shts. 1-3)	70
4.6-9	Control Rod Drive System PFD	73
5.1-3	Nuclear Boiler System P&ID (shts. 1-11)	74
5.2-8	Leak Detection and Isolation System IED (shts. 1-10)	85
5.4-4	Reactor Recirculation System P&ID (shts. 1-2)	95
5.4-5	Reactor Recirculation System PFD	97
5.4-8	Reactor Core Isolation Cooling System P&ID (shts. 1-3)	98
5.4-9	Reactor Core Isolation Cooling System PFD (shts. 1-2)	101

Figure No.	Title	Page No.
5.4-10	Residual Heat Removal System P&ID (shts. 1-7)	103
5.4-11	Residual Heat Removal System PFD (shts. 1-2)	110
5.4-12	Reactor Water Cleanup System P&ID (shts. 1-4)	112
5.4-13	Reactor Water Cleanup System PFD (shts. 1-2)	116
6.2-38	Group Classification and Containment Isolation Diagram (shts. 1-2)	118
6.2-39	Atmospheric Control System P&ID (shts. 1-3)	120
6.2-40	Flammability Control System P&ID (shts. 1-2)	123
6.3-1	High Pressure Core Flooder System PFD (shts. 1-2)	125
6.3-7	High Pressure Core Flooder System P&ID (shts. 1-2)	127
6.5-1	Standby Gas Treatment System P&ID (shts. 1-3)	129
6.7-1	High Pressure Nitrogen Gas Supply System P&ID	132
7.2-9	Reactor Protection System IED (shts. 1-11)	133
7.2-10	Reactor Protection System IBD (shts. 1-9)	143.1
	VOLUME 2	
7.2-10	Reactor Protection System IBD (shts. 10-72)	143.1O
7.3-1	High Pressure Core Flooder System IBD (shts. 1-11)	144
7.3-2	Nuclear Boiler System IBD (shts. 1-37)	155
7.3-3	Reactor Core Isolation Cooling System IBD (shts. 1-17)	192
7.3-4	Residual Heat Removal System IBD (shts. 1-20)	209
	VOLUME 3	
7.3-5	Leak Detection and Isolation System IBD (shts. 1-77)	228.1
7.3-6	Standby Gas Treatment System IBD (shts. 1-11)	229
7.3-7	Reactor Building Cooling Water / Reactor Service Water System IBD (shts. 1-19)	240
7.3-9	HVAC Emergency Cooling Water System IBD (shts. 1-11)	259
7.3-10	High Pressure Nitrogen Gas System IBD (shts. 1-3)	270
7.4-1	Standby Liquid Control System IBD (shts. 1-6)	273
7.4-2	Remote Shutdown System IED	279
7.4-3	Remote Shutdown System IBD (shts. 1-27)	280
	VOLUME 4	
7.6-1	Neutron Monitoring System IED (shts. 1-4)	307
7.6-2	Neutron Monitoring System IBD (shts. 1-28)	310.1
7.6-5	Process Radiation Monitoring System IED (shts. 1-11)	311
7.6-7	Containment Atmospheric Monitoring System IED (shts. 1-4)	322
7.6-8	Containment Atmospheric Monitoring System IBD (shts. 1-10)	326
7.6-11	Suppression Pool Temperature Monitoring System IED (shts. 1-3)	336
7.6-12	Suppression Pool Temperature Monitoring System IBD (shts. 1-6)	339
7.7-2	Rod Control and Information System IED (shts. 1-5)	345
7.7-3	Rod Control and Information System IBD (shts. 1-39)	350
	VOLUME 5	
7.7-3	Rod Control and Information System IBD (shts. 40-87)	389
7.7-4	Control Rod Drive System IBD (shts. 1-8)	437
7.7-5	Recirculation Flow Control System IED (shts. 1-2)	445

Figure No.	Title	Page No.
7.7-7	Recirculation Flow Control System IBD (shts. 1-9)	447
7.7-8	Feedwater Control System IED (shts. 1-3)	455.1
7.7-9	Feedwater Control System IBD (shts. 1-14)	456
7.7-12	Steam Bypass & Pressure Control System IED (shts. 1-2)	471
7.7-13	Steam Bypass & Pressure Control System IBD (shts. 1-5)	473
7.7-14	Fuel Pool Cooling & Cleanup System IBD (shts. 1-8)	478
8.2-1	Power Distribution System Routing Diagram (shts. 1-7)	486
8.3-1	Electrical Power Distribution System SLD (shts. 1-3)	493
8.3-2	Instrument & Control Power Supply System SLD	496
8.3-3	Plant Vital AC Power Supply System SLD (shts. 1-2)	497
8.3-4	Plant DC Power Supply System SLD (shts. 1-3)	499
9.1-1	Fuel Pool Cooling and Cleanup System P&ID (shts. 1-3)	502
9.1-2	Fuel Pool Cooling and Cleanup System PFD (shts. 1-2)	505
9.1-12	Plant Refueling & Servicing Sequence	507
9.2-1	Reactor Building Cooling Water System P&ID (shts. 1-9)	508
9.2-1a	Reactor Building Cooling Water System PFD	517
9.2-2	HVAC Normal Cooling Water System P&ID	518
9.2-3	HVAC Emergency Cooling Water System P&ID (shts. 1-3)	519
9.2-4	Makeup Water System (Condensate) P&ID	522
9.2-5	Makeup Water System (Purified) P&ID (shts. 1-3)	523
	VOLUME 6	
9.2-7	Reactor Service Water System P&ID (shts. 1-3)	526
9.3-1	Standby Liquid Control System P&ID	529
9.3-1a	Standby Liquid Control System PFD	530
9.3-6	Instrument Air System P&ID (shts. 1-2)	531
9.3-7	Station Service Air System P&ID (shts. 1-2)	533
9.4-1	Control Building HVAC Flow Diagram (shts. 1-5)	535
9.4-2a	Turbine Building Ventilation System Air Flow Diagram	540
9.4-2b	Turbine Building Ventilation System Control Diagram (shts. 1-2)	541
9.4-3	Secondary Containment HVAC System (shts. 1-3)	542.1
9.4-4	R/B Safety-Related Electrical Equipment HVAC System (shts. 1- 3)	543
9.4-5	Reactor Internal Pump Control Panel Room HVAC System	545.1
9.4-8	Drywell Cooling System P&ID	546
9.4-10	Radwaste Building HVAC (shts. 1-3)	547
9.5-1	Suppression Pool Cleanup System P&ID	550
9.5-6	Standby Diesel Generator Fuel Oil and Combustion Air Intake & Exhaust Systems	551
9.5-7	Standby Diesel Generator Jacket Cooling Water System	552
9.5-8	Standby Diesel Generator Starting Air System	553
9.5-9	Standby Diesel Generator Lubricating Oil System	554
9A.4-1	Reactor Building Fire Protection at Elevation -8200 mm	555
9A.4-2	Reactor Building Fire Protection at Elevation -1700 mm	556
9A.4-3	Reactor Building Fire Protection at Elevation 4800/8500 mm	557

Figure No.	Title	Page No.
9A.4-4	Reactor Building Fire Protection at Elevation 12300 mm	558
9A.4-5	Reactor Building Fire Protection at Elevation 18100 mm	559
9A.4-6	Reactor Building Fire Protection at Elevation 23500 mm	560
9A.4-7	Reactor Building Fire Protection at Elevation 27200 mm	561
9A.4-8	Reactor Building Fire Protection at Elevation 31700/38200 mm	562
9A.4-9	Reactor Building Fire Protection, Section A-A	563
9A.4-10	Reactor Building Fire Protection, Section B-B	564
9A.4-11	Control Building Fire Protection, Section B-B	565
9A.4-12	Control Building Fire Protection at Elevation -8200 mm	566
9A.4-13	Control Building Fire Protection at Elevation -2150 mm	567
9A.4-14	Control Building Fire Protection at Elevation 3500 mm	568
9A.4-15	Control Building Fire Protection at Elevation 7900 mm	569
9A.4-16	Control Building Fire Protection at Elevation 12300 mm	570
9A.4-16a	Control Building Fire Protection at Elevation 17150 mm	571
9A.4-16b	Control Building Fire Protection at Elevation 22200 mm	572
9A.4-17	Turbine Building Fire Protection, Section A-A	573
9A.4-18	Turbine Building Fire Protection at Elevation 5300 mm	574
9A.4-19	Turbine Building Fire Protection at Elevation 12300 mm	575
9A.4-20	Turbine Building Fire Protection at Elevation 20300 mm	576
9A.4-21	Turbine Building Fire Protection at Elevation 30300 mm	577
9A.4-22	Service Building Fire Protection, Section B-B (See Figure 9A.4-11)	565
9A.4-23	Service Building Fire Protection at Elevation -2150 mm (See Figure 9A.4-13)	567
9A.4-24	Service Building Fire Protection at Elevation 3500 mm (See Figure 9A.4-14)	568
9A.4-25	Service Building Fire Protection at Elevation 7900 mm (See Figure 9A.4-15)	569
9A.4-26	Service Building Fire Protection at Elevation 12300 mm (See Figure 9A.4-16)	570
9A.4-27	Service Building Fire Protection at Elevation 17150 mm (See Figure 9A.4-16a)	571
9A.4-28	Radwaste Building Fire Protection, Section A-A	578
9A.4-29	Radwaste Building Fire Protection at Elevation -1500 mm	579
9A.4-30	Radwaste Building Fire Protection at Elevation 4800 mm	580
9A.4-31	Radwaste Building Fire Protection at Elevation 12300 mm	581
9A.4-32	Radwaste Building Fire Protection at Elevation 21000 mm	582
10.1-2	Reference Heat Balance for Guaranteed Reactor Rating	583
10.1-3	Reference Heat Balance for Valves-Wide-Open (VWO)	584
11.2-1	Radwaste System PFD (shts. 1-2)	584.1
11.3-1	Offgas System PFD	584.39
12.3-1	Reactor Building Radiation Zone Map for Full Power & Shutdown Operation at Elevation -8200 mm (B3F)	585
12.3-2	Reactor Building Radiation Zone Map for Full Power & Shutdown Operation at Elevation -1700 mm (B2F)	586
12.3-3	Reactor Building Radiation Zone Map for Full Power & Shutdown Operation at Elevation 4800/8500 mm (B1F)	587
12.3-5	Reactor Building Radiation Zone Map for Full Power & Shutdown Operation at Elevation 12300 mm (1F)	588
12.3-6	Reactor Building Radiation Zone Map for Full Power & Shutdown Operation at Elevation 18100 mm (2F)	589
12.3-7	Reactor Building Radiation Zone Map for Full Power & Shutdown Operation at Elevation 23500 mm (3F)	590
12.3-8	Reactor Building Radiation Zone Map for Full Power & Shutdown Operation at Elevation 27200 mm (3.5F)	591

Figure No.	Title	Page No.
12.3-9	Reactor Building Radiation Zone Map for Full Power & Shutdown Operation at Elevation 31700/38200 mm (4FM)	592
12.3-10	Reactor Building Radiation Zone Map for Full Power and Shutdown Operation, Section A-A	593
12.3-11	Reactor Building Radiation Zone Map for Full Power and Shutdown Operation, Section B-B	594
12.3-12	Reactor Building Radiation Zone Map Post LOCA at Elevation -8200 mm (B3F)	595
12.3-13	Reactor Building Radiation Zone Map Post LOCA at Elevation -1700 mm (B2F)	596
12.3-14	Reactor Building Radiation Zone Map Post LOCA at Elevation 4800/8500 mm (B1F)	597
12.3-16	Reactor Building Radiation Zone Map Post LOCA at Elevation 12300 mm (1F)	598
12.3-17	Reactor Building Radiation Zone Map Post LOCA at Elevation 18100 mm (2F)	599
12.3-18	Reactor Building Radiation Zone Map Post LOCA at Elevation 23500 mm (3F)	600
12.3-19	Reactor Building Radiation Zone Map Post LOCA at Elevation 27200 mm (3.5F)	601
12.3-20	Reactor Building Radiation Zone Map Post LOCA at Elevation 31700/38200 mm (4FM)	602
12.3-21	Reactor Building Radiation Zone Map Post LOCA, Section A-A	603
12.3-22	Reactor Building Radiation Zone Map Post LOCA, Section B-B	604
12.3-37	Radwaste Building, Radiation Zone Map, Normal Operation at Elevation -1500 mm	606
12.3-38	Radwaste Building, Radiation Zone Map, Normal Operation at Elevation -4800 mm	607
12.3-39	Radwaste Building, Radiation Zone Map, Normal Operation at Elevation 12300 mm	608
12.3-40	Radwaste Building, Radiation Zone Map, Normal Operation at Elevation 21000 mm	609
12.3-41	Radwaste Building, Radiation Zone Map, Normal Operation, Section A-A	610
12.3-42	Control Building, Radiation Zone, Normal Operation at Elevation -8200 mm	611
12.3-43	Control and Service Building, Radiation Zone, Normal Operation at Elevation -2150 mm	612
12.3-44	Control and Service Building, Radiation Zone, Normal Operation at Elevation 3500 mm	613
12.3-45	Control and Service Building, Radiation Zone, Normal Operation at Elevation 7900 mm	614
12.3-46	Control and Service Building, Radiation Zone, Normal Operation at Elevation 12300 mm	615
12.3-47	Control and Service Building, Radiation Zone, Normal Operation at Elevation 17150 mm	616
12.3-48	Control and Service Building, Radiation Zone, Normal Operation, Side View, Cross Section B-B	617
12.3-49	Turbine Building, Radiation Zone at Elevation 5300 mm	618
12.3-50	Turbine Building, Radiation Zone at Elevation 12300 mm	619
12.3-51	Turbine Building, Radiation Zone at Elevation 20300 mm	620
12.3-52	Turbine Building, Radiation Zone at Elevation 30300 mm	621
12.3-53	Turbine Building, Radiation Zone at Normal Operation Longitudinal Section A-A	622
12.3-54	Control and Service Building, Radiation Zone, Post LOCA, Section B-B	623
12.3-55	Turbine Building, Radiation Zone, Post LOCA, Longitudinal Section A-A	624
12.3-56	Reactor Building, Area Radiation Monitors at Elevation -8200 mm	625
12.3-57	Reactor Building, Area Radiation Monitors at Elevation -1700 mm	626
12.3-58	Reactor Building, Area Radiation Monitors at Elevation 4800/8500 mm	627
12.3-59	Reactor Building, Area Radiation Monitors at Elevation 12300 mm	628
12.3-60	Reactor Building, Area Radiation Monitors at Elevation 23500 mm	629
12.3-61	Reactor Building, Area Radiation Monitors at Elevation 27200 mm	630
12.3-62	Reactor Building, Area Radiation Monitors at Elevation 31700/38200 mm	631
12.3-63	Reactor Building, Area Radiation Monitors, Section B-B	632
12.3-64	Control and Service Buildings, Area Radiation Monitors, Section B-B	633
12.3-65	Radwaste Building, Area Radiation Monitors at Elevation -1500 mm	634

Figure No.	Title	Page No.
12.3-66	Radwaste Building, Area Radiation Monitors at Elevation 4800 mm	635
12.3-67	Radwaste Building, Area Radiation Monitors at Elevation 12300 mm	636
12.3-68	Radwaste Building, Area Radiation Monitors at Elevation 21000 mm	637
12.3-70	Turbine Building, Area Radiation Monitors at Elevation 12300 mm	638
12.3-71	Turbine Building, Area Radiation Monitors at Elevation 20300 mm	639
12.3-72	Turbine Building, Area Radiation Monitors at Elevation 30300 mm	640
12.3-73	Turbine Building, Area Radiation Monitors, Longitudinal Section A-A	641
15B-3	Fine Motion Control Rod Drive	642
18C-5	Arrangement of Equipment of Main Control Console	643
18C-7	Fixed-Position Display	644
20.3.4-5a	Low Pressure Core Flooder Sparger (Sht. 1)	645
20.3.4-5b	Low Pressure Core Flooder Sparger (Sht. 2)	646
20.3.4-5c	High Pressure Core Flooder Sparger	647

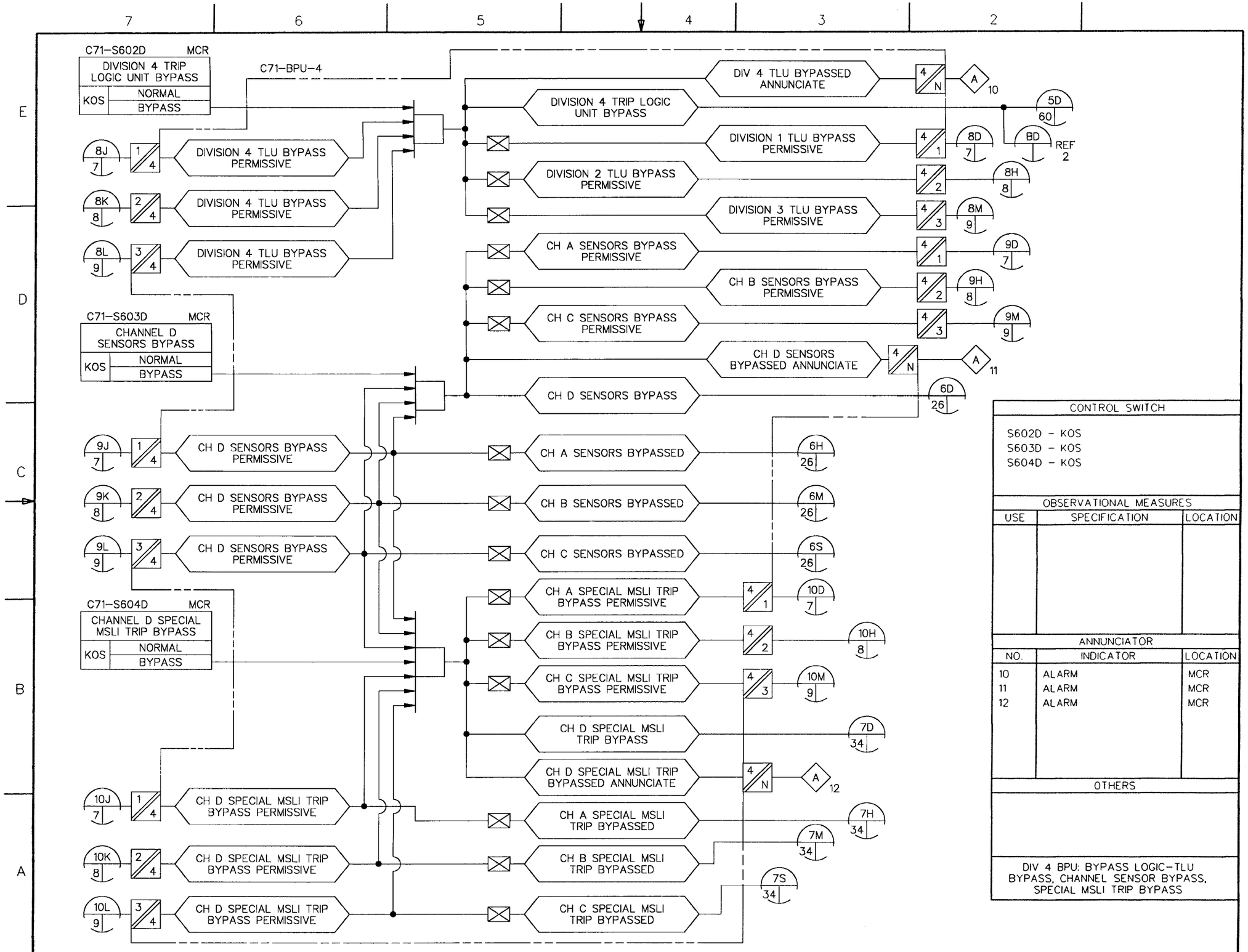

FIGURE 7.2-10 REACTOR PROTECTION SYSTEM IBD (Sheet 10 of 72)

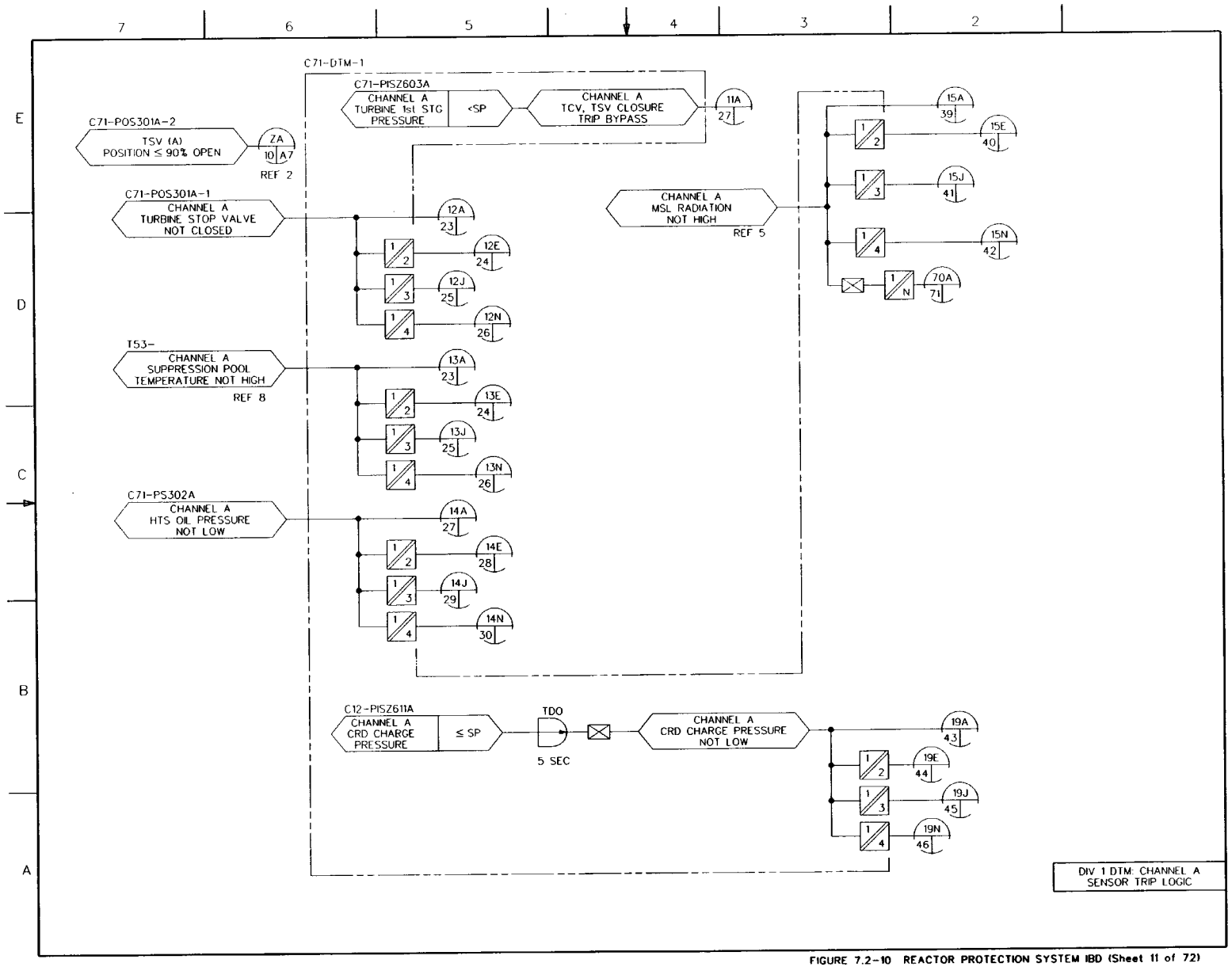

FIGURE 7.2-10 REACTOR PROTECTION SYSTEM IBD (Sheet 11 of 72)

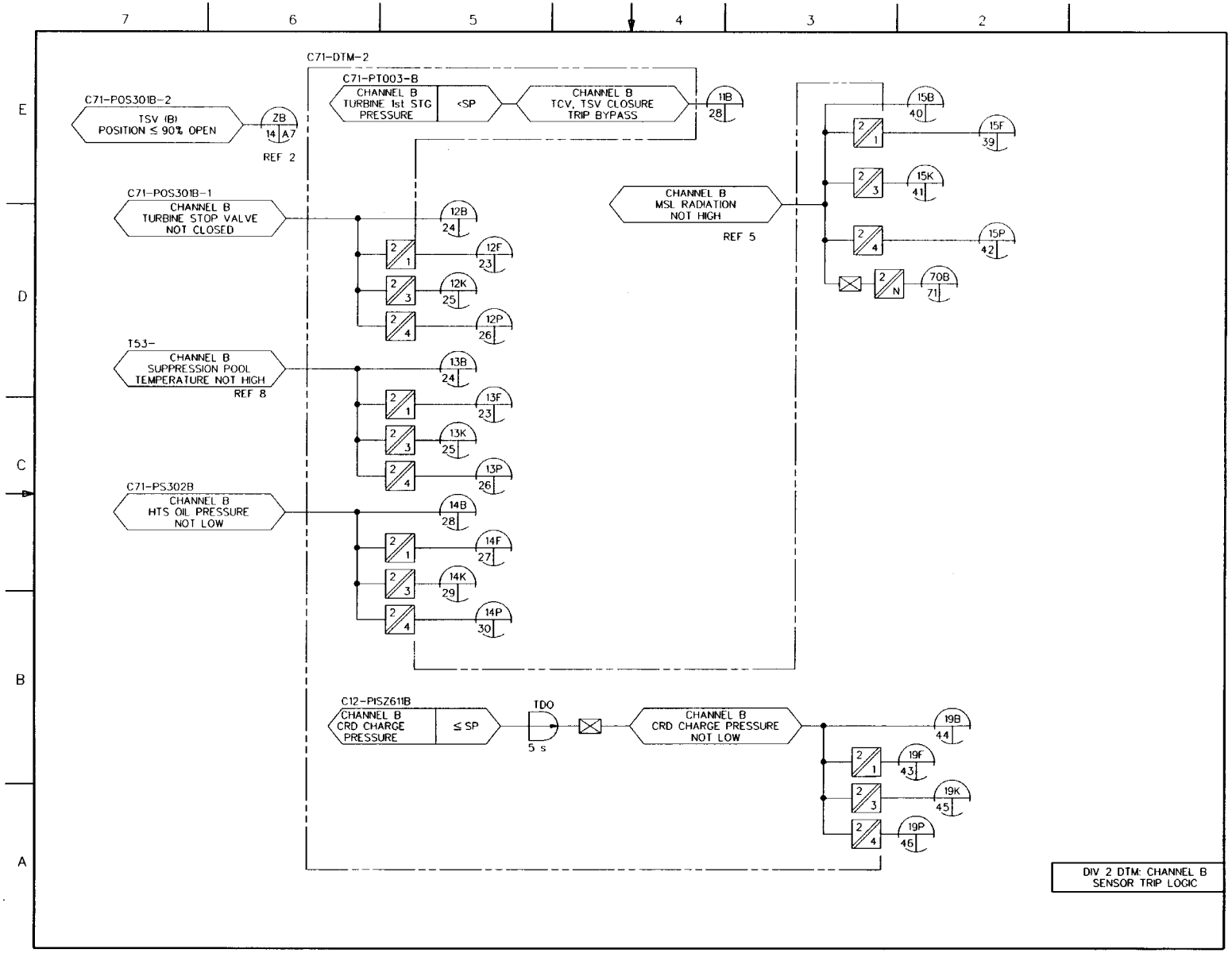

FIGURE 7.2-10 REACTOR PROTECTION SYSTEM IBD (Sheet 12 of 72)

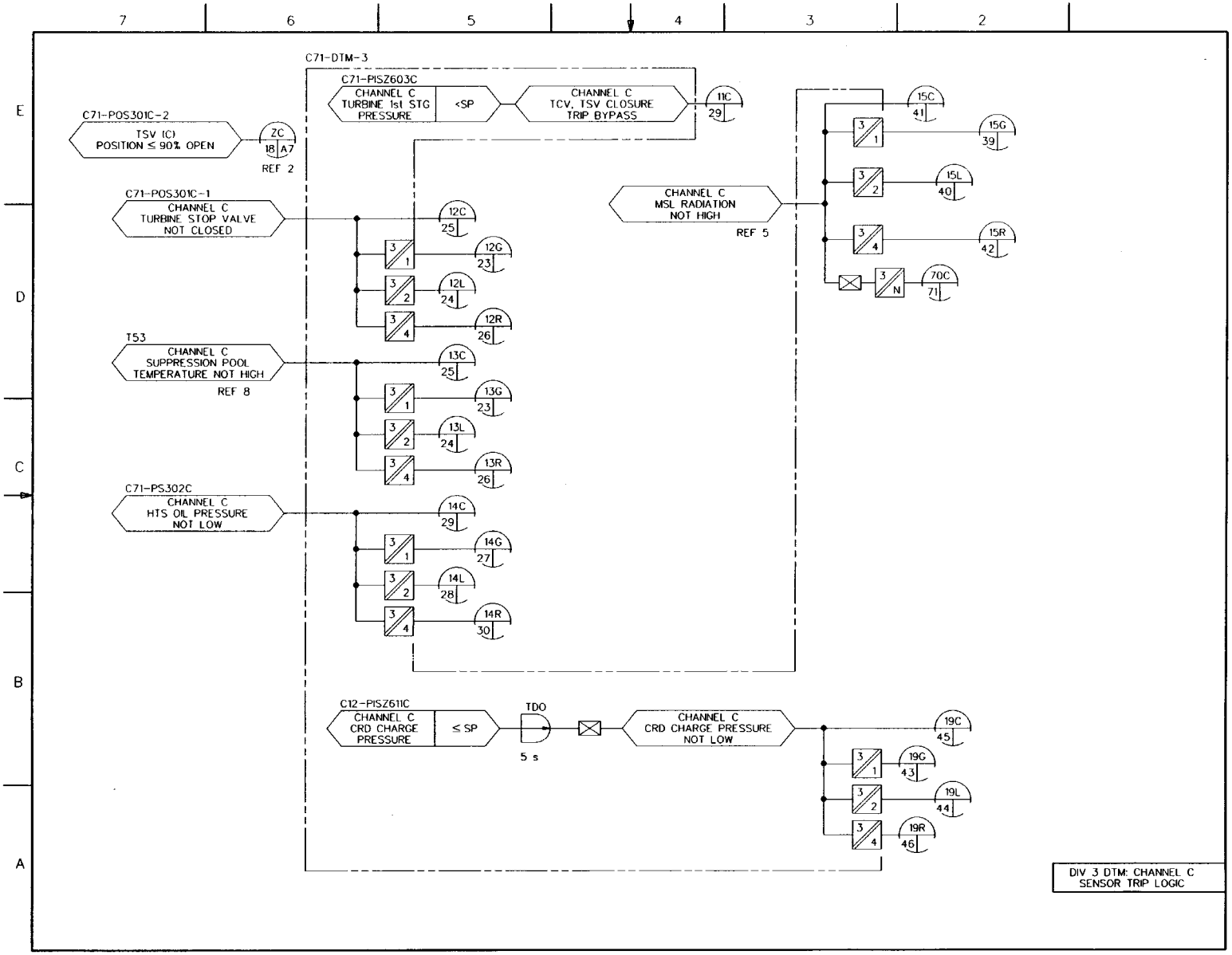

FIGURE 7.2-10 REACTOR PROTECTION SYSTEM IBD (Sheet 13 of 72)

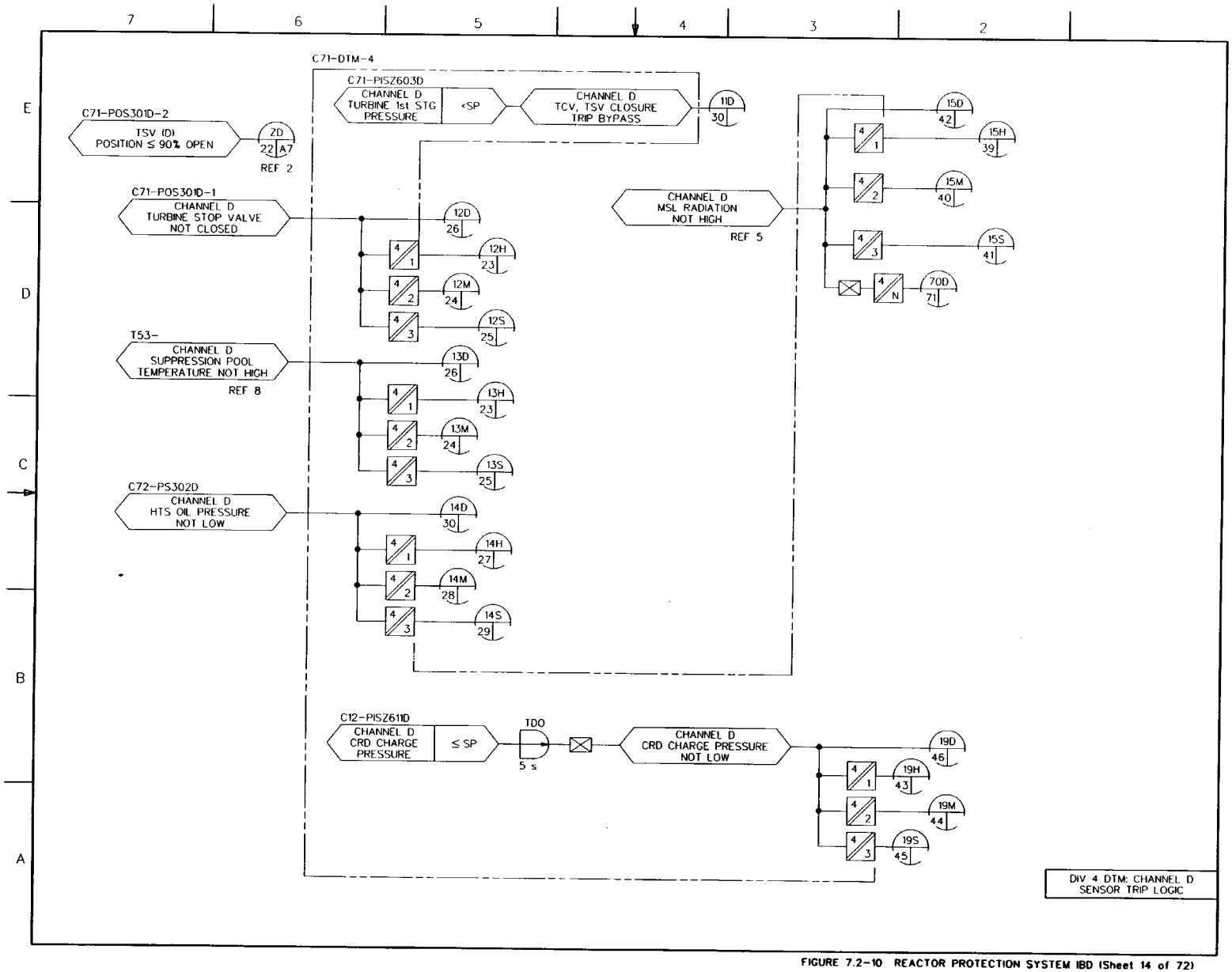

FIGURE 7.2-10 REACTOR PROTECTION SYSTEM IBD (Sheet 14 of 72)

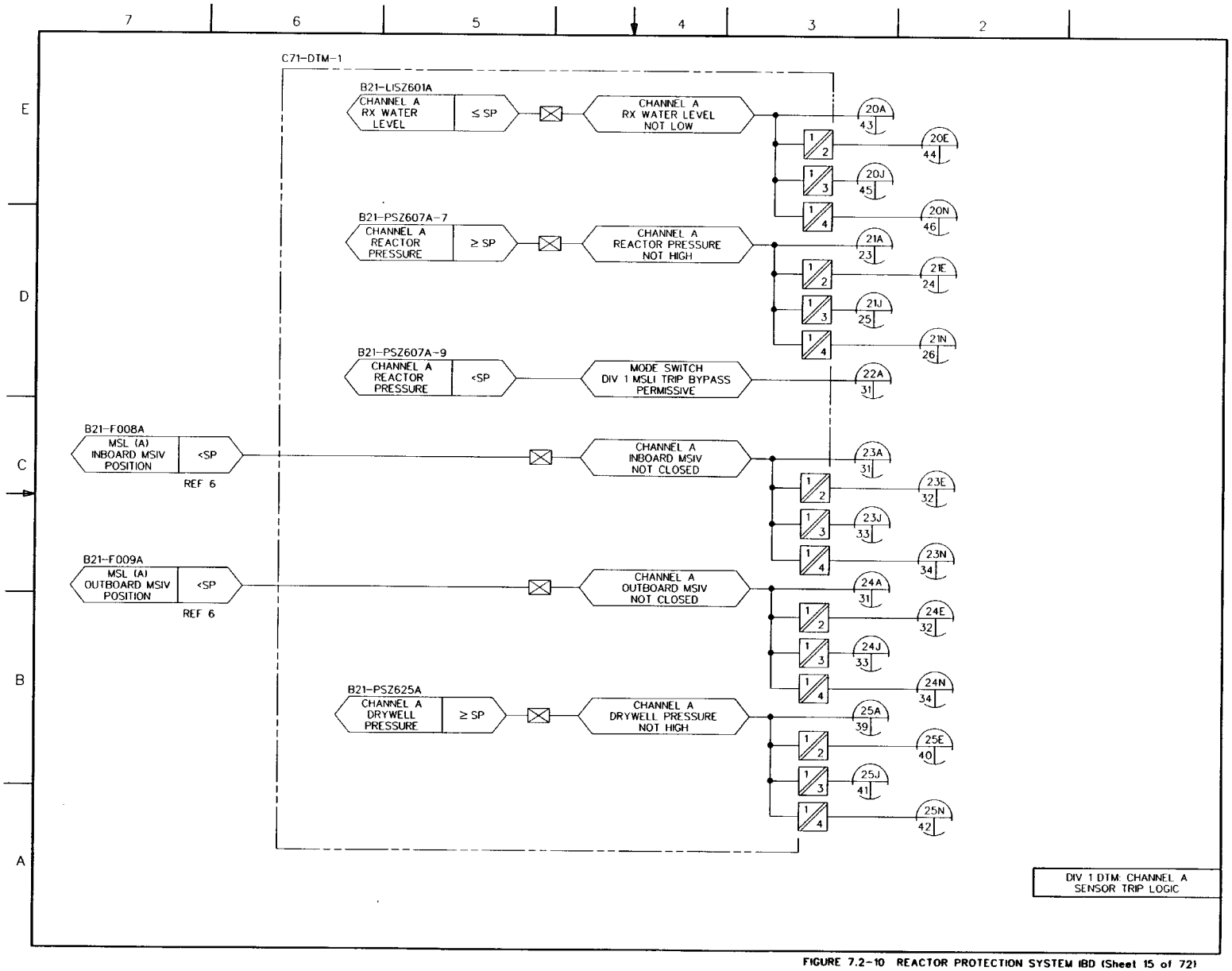

FIGURE 7.2-10 REACTOR PROTECTION SYSTEM IBD (Sheet 15 of 72)

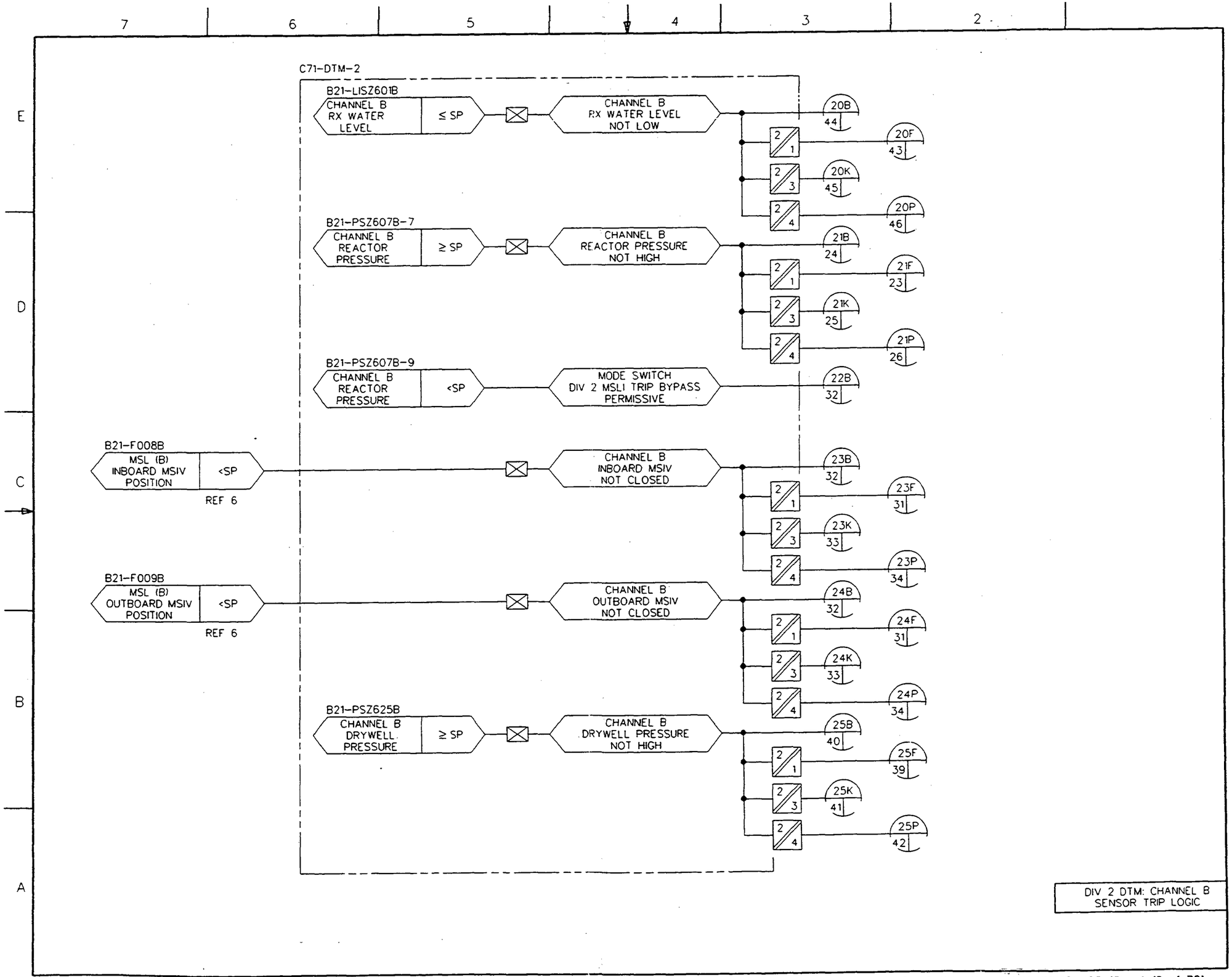

FIGURE 7.2-10 REACTOR PROTECTION SYSTEM IBD (Sheet 16 of 72)

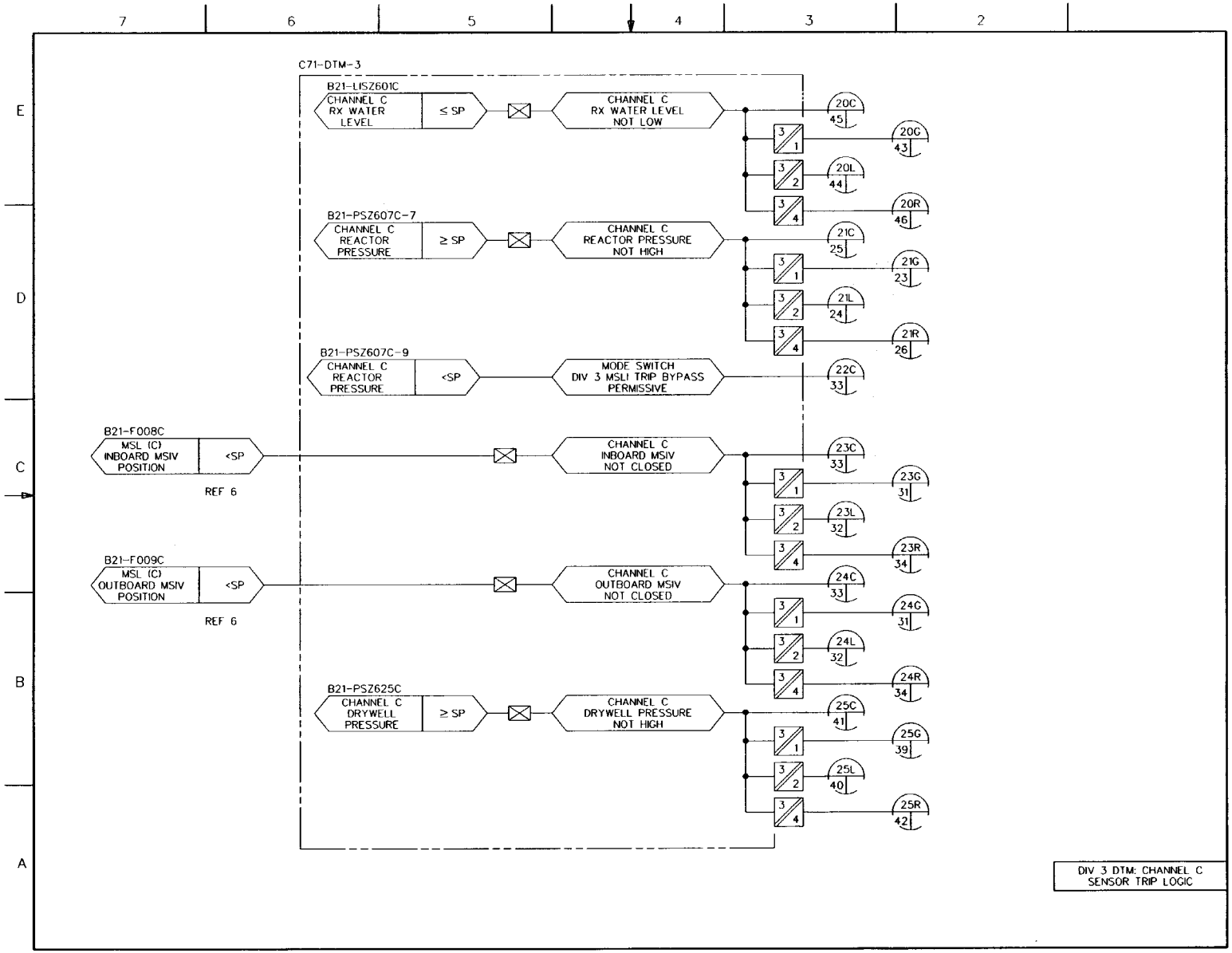

FIGURE 7.2-10 REACTOR PROTECTION SYSTEM IBD (Sheet 17 of 72)

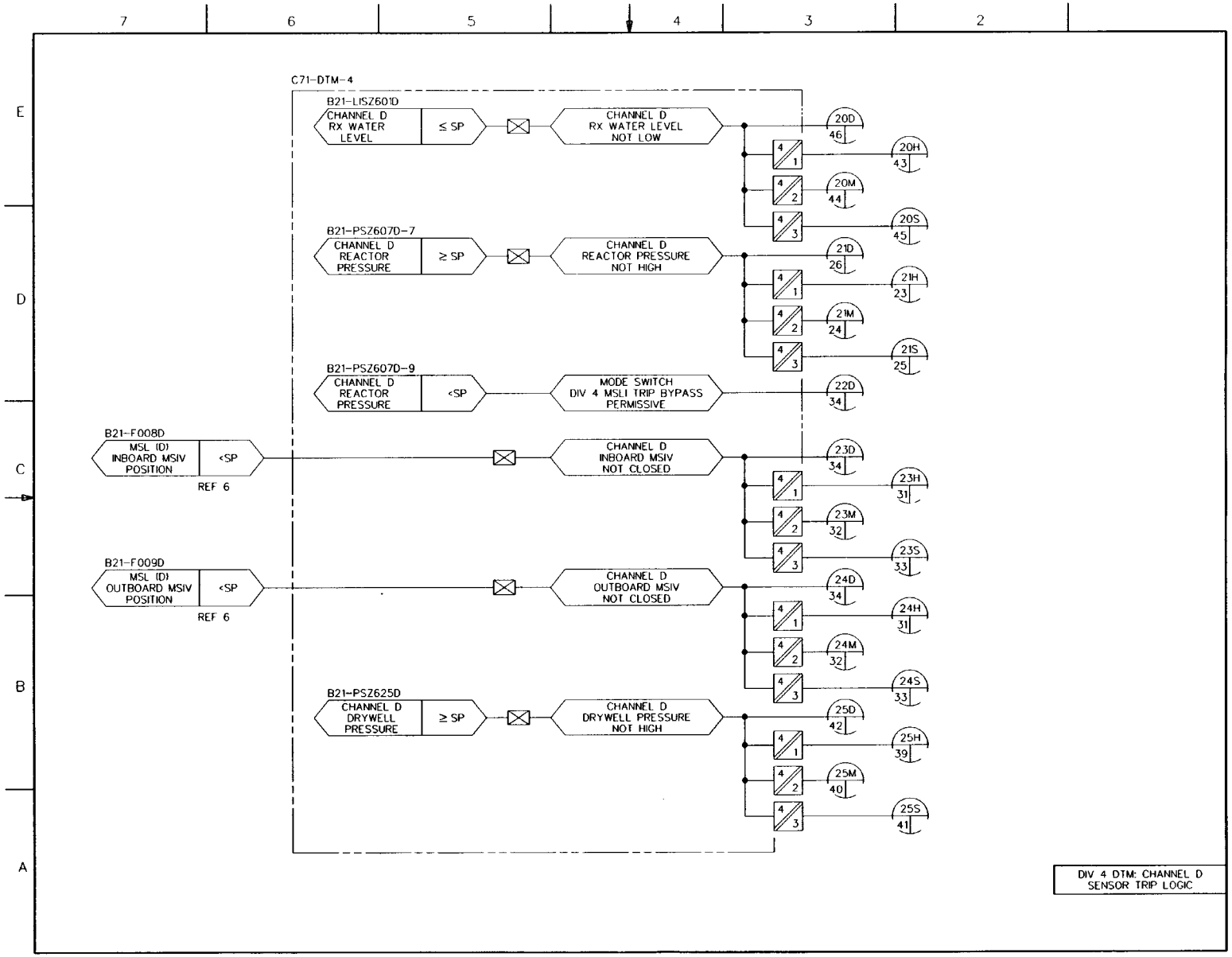

FIGURE 7.2-10 REACTOR PROTECTION SYSTEM IBD (Sheet 18 of 72)

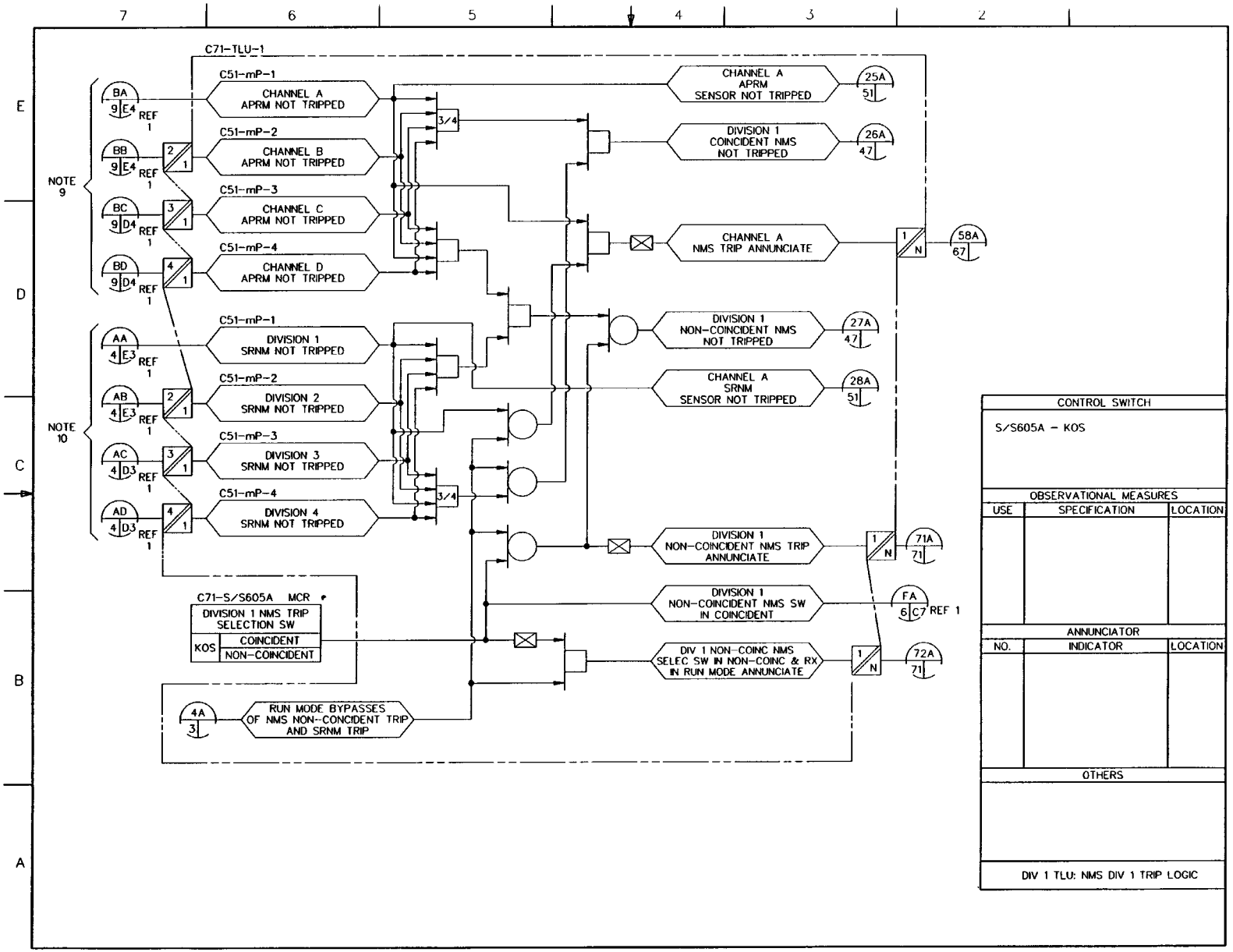

FIGURE 7.2-10 REACTOR PROTECTION SYSTEM IBD (Sheet 19 of 72)

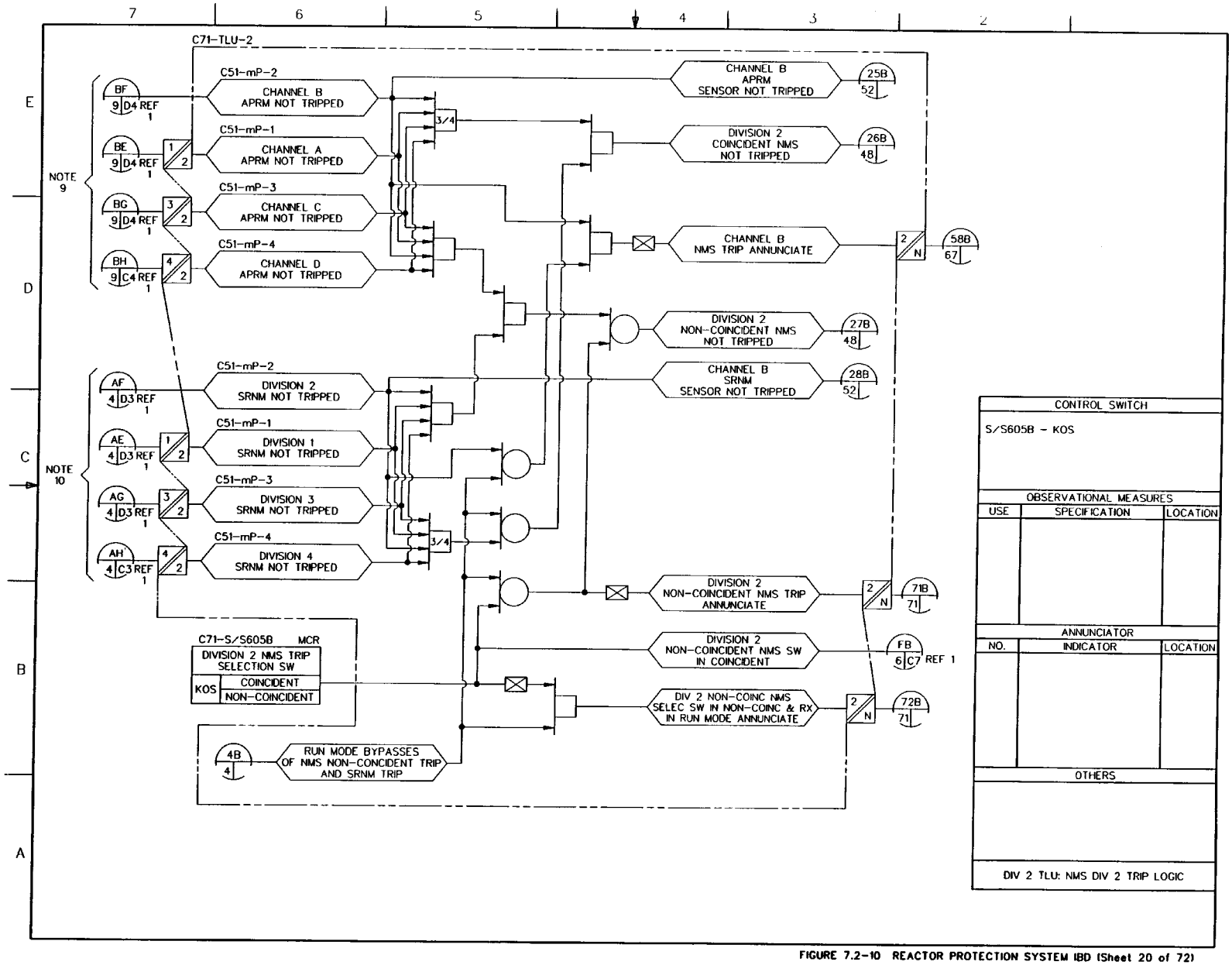

FIGURE 7.2-10 REACTOR PROTECTION SYSTEM IBD (Sheet 20 of 72)

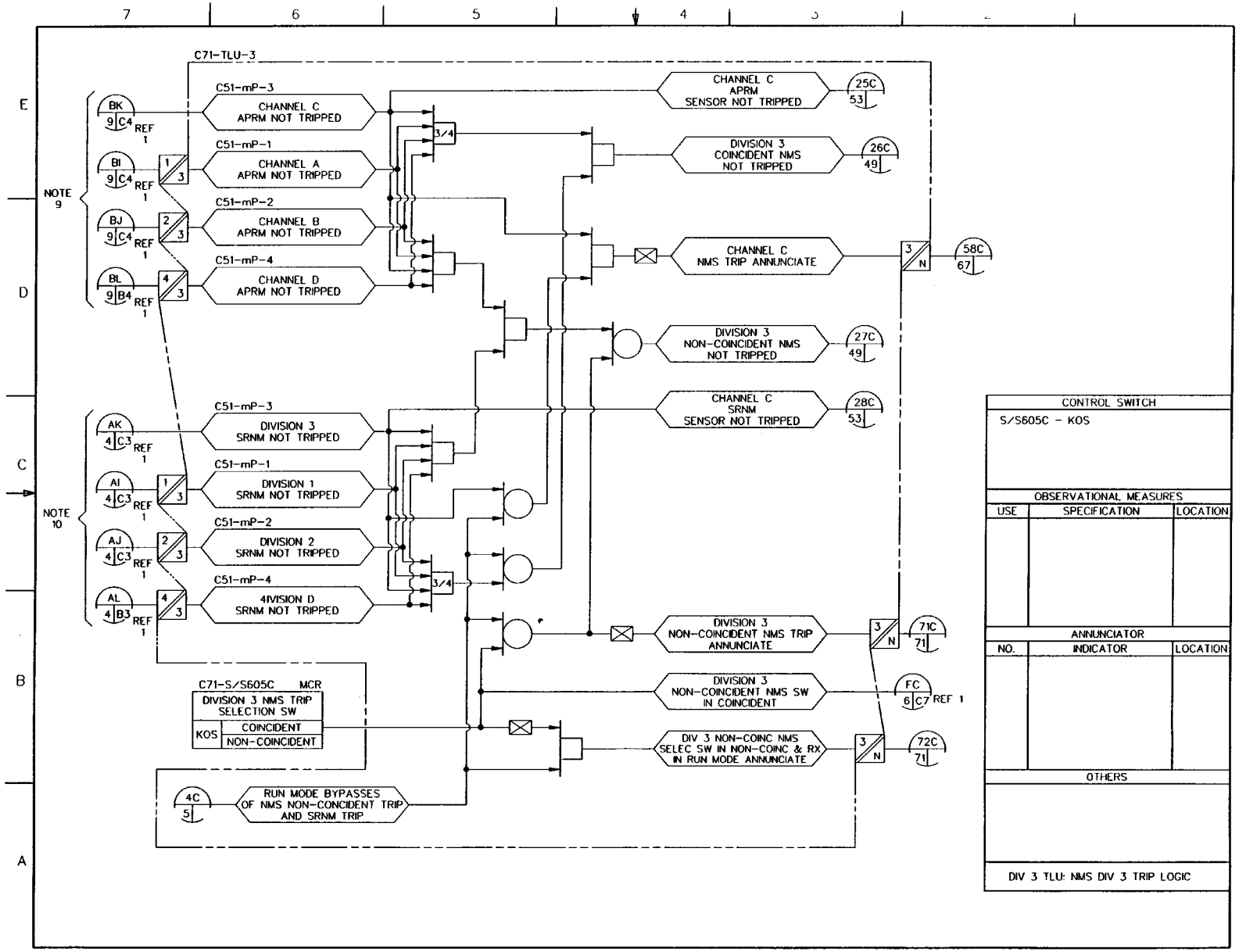

FIGURE 7.2-10 REACTOR PROTECTION SYSTEM IBD (Sheet 21 of 72)

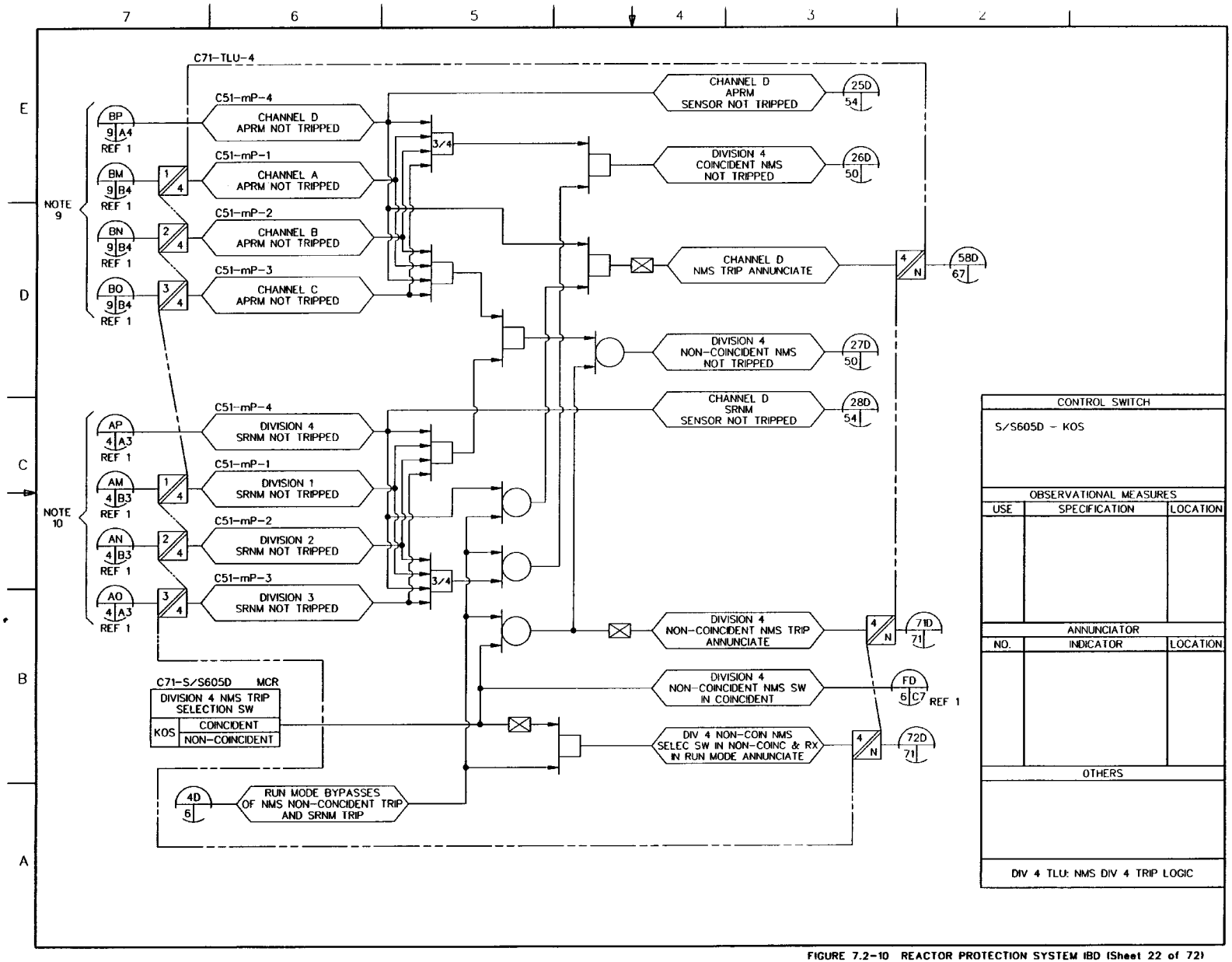

FIGURE 7.2-10 REACTOR PROTECTION SYSTEM IBD (Sheet 22 of 72)

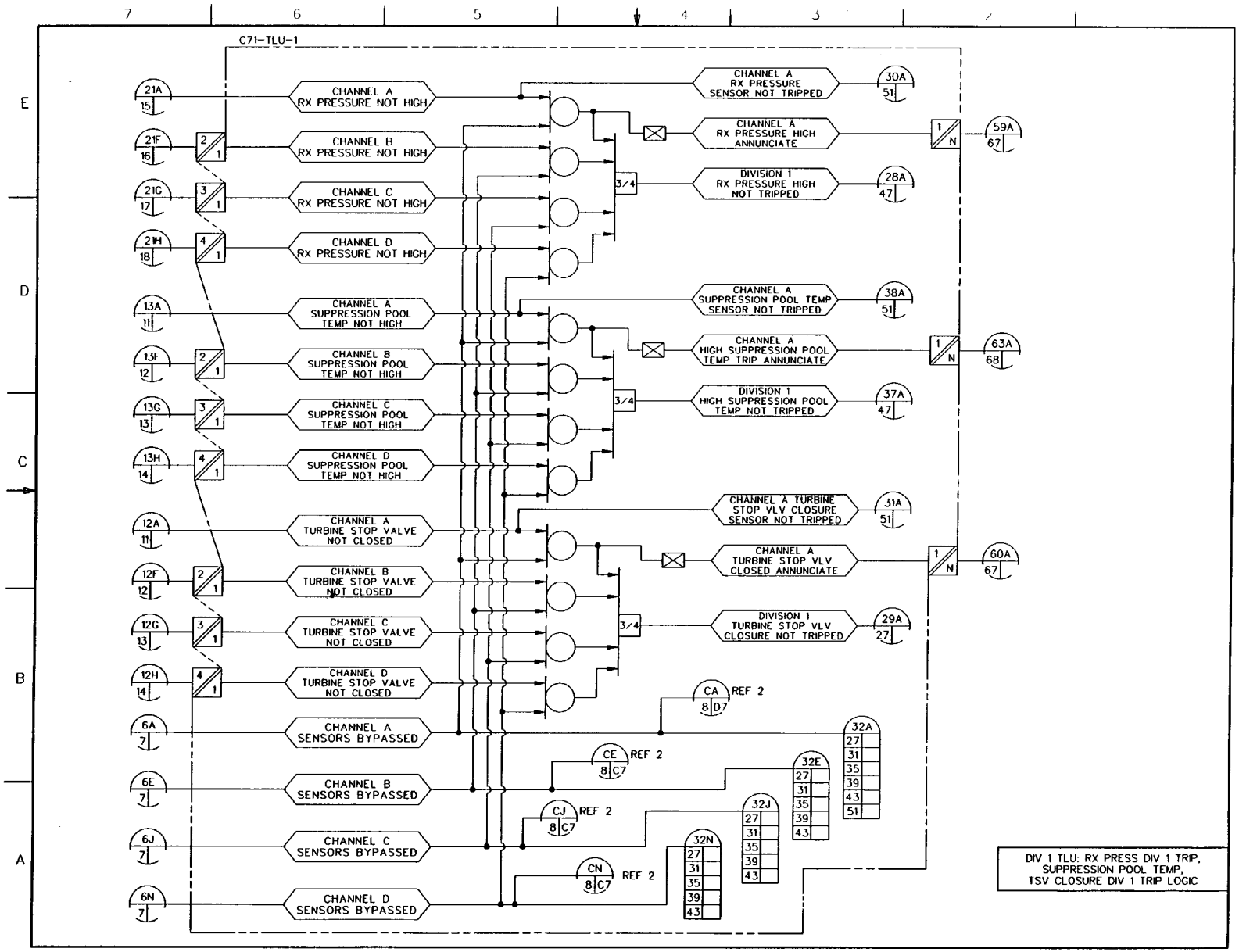

FIGURE 7.2-10 REACTOR PROTECTION SYSTEM IBD (Sheet 23 of 72)

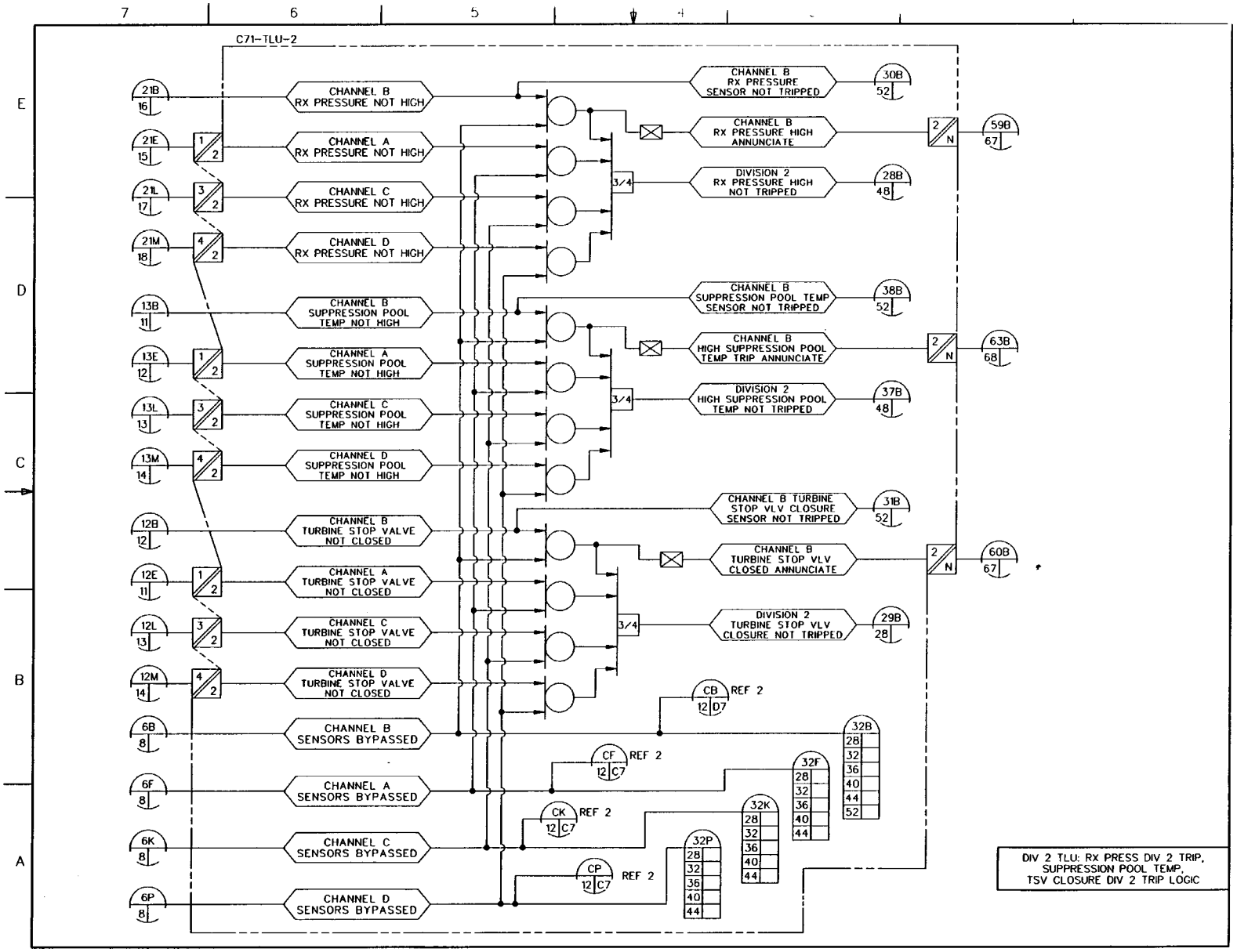

FIGURE 7.2-10 REACTOR PROTECTION SYSTEM IBD (Sheet 24 of 72)

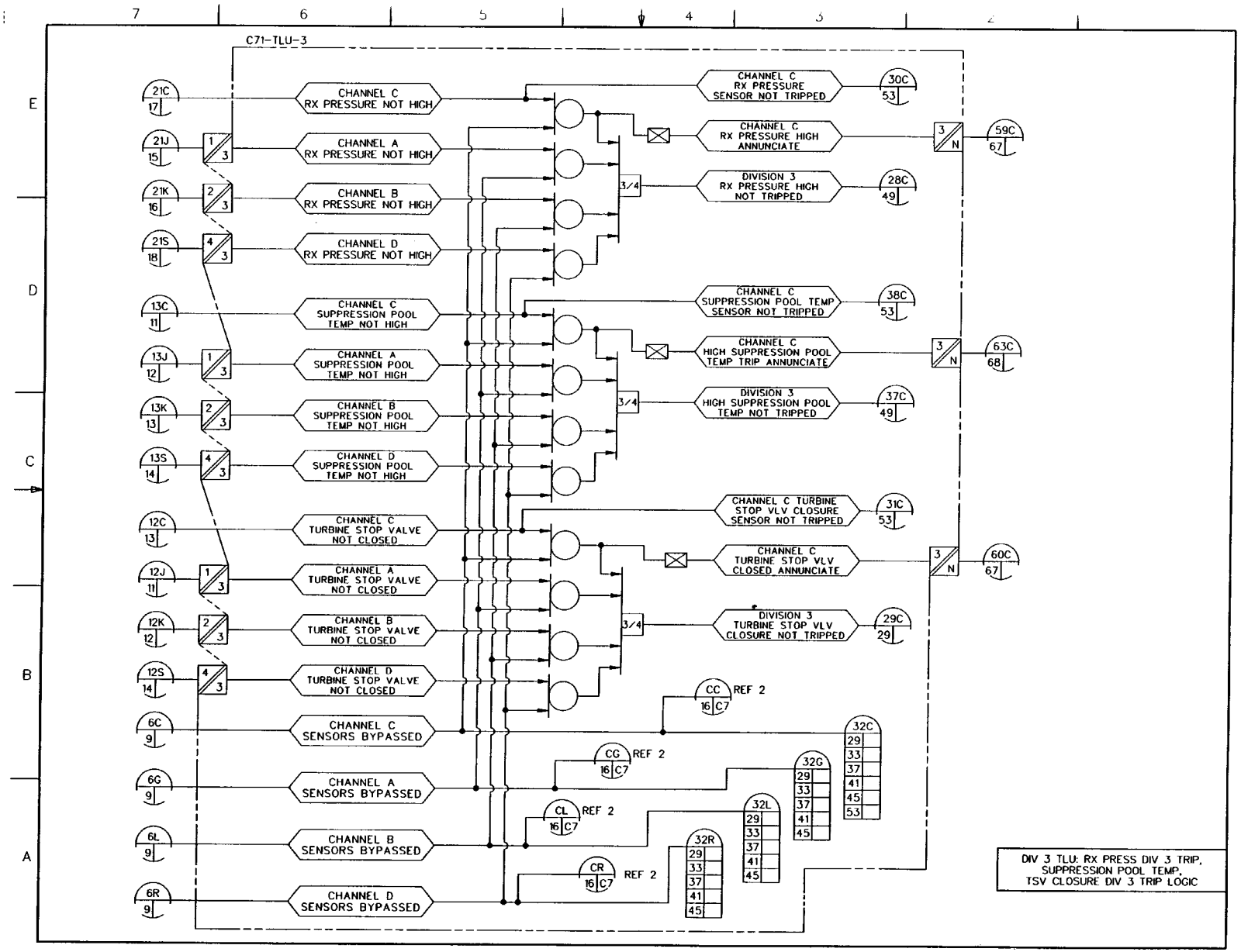

FIGURE 7.2-10 REACTOR PROTECTION SYSTEM IBD (Sheet 25 of 72)

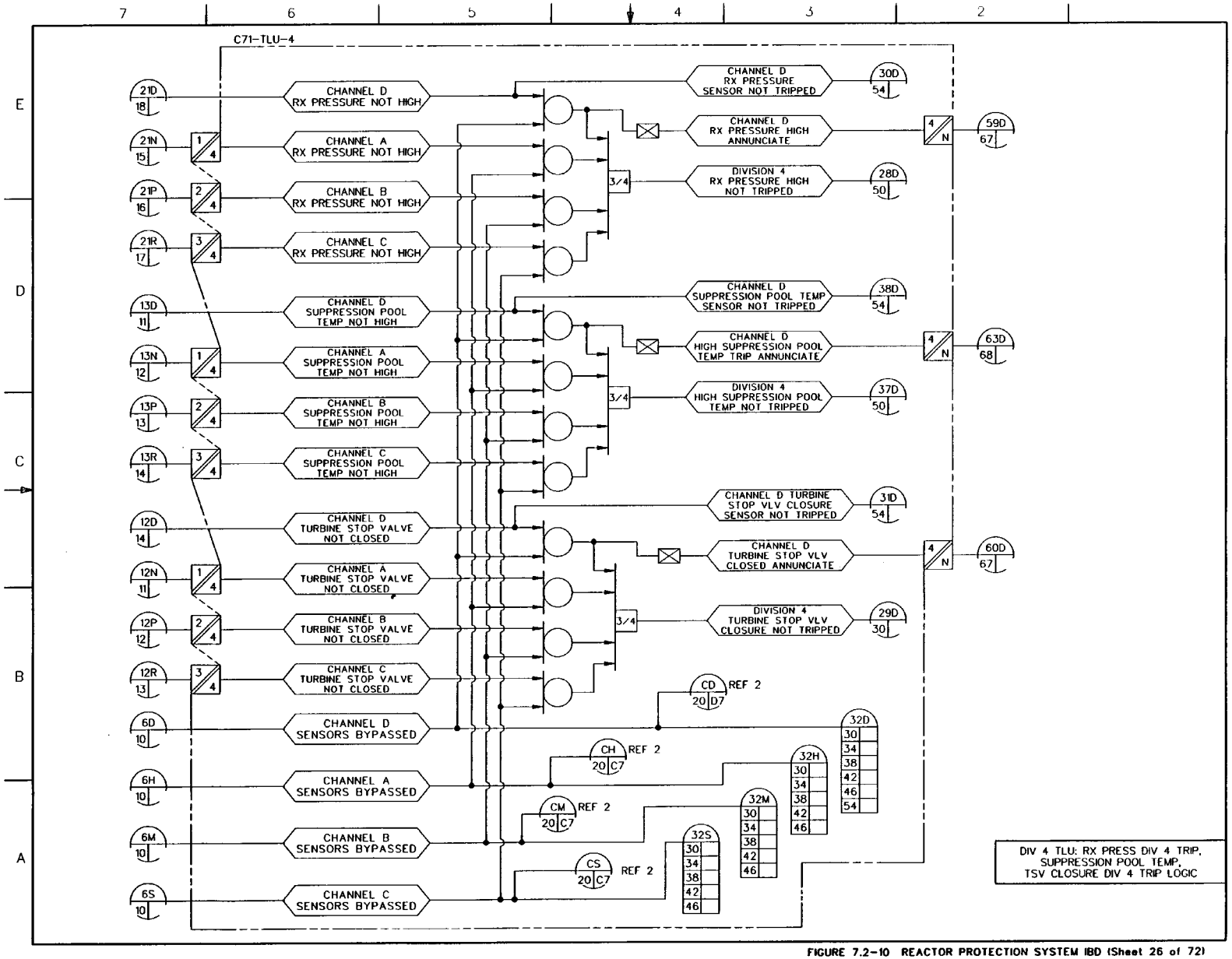

FIGURE 7.2-10 REACTOR PROTECTION SYSTEM IBD (Sheet 26 of 72)

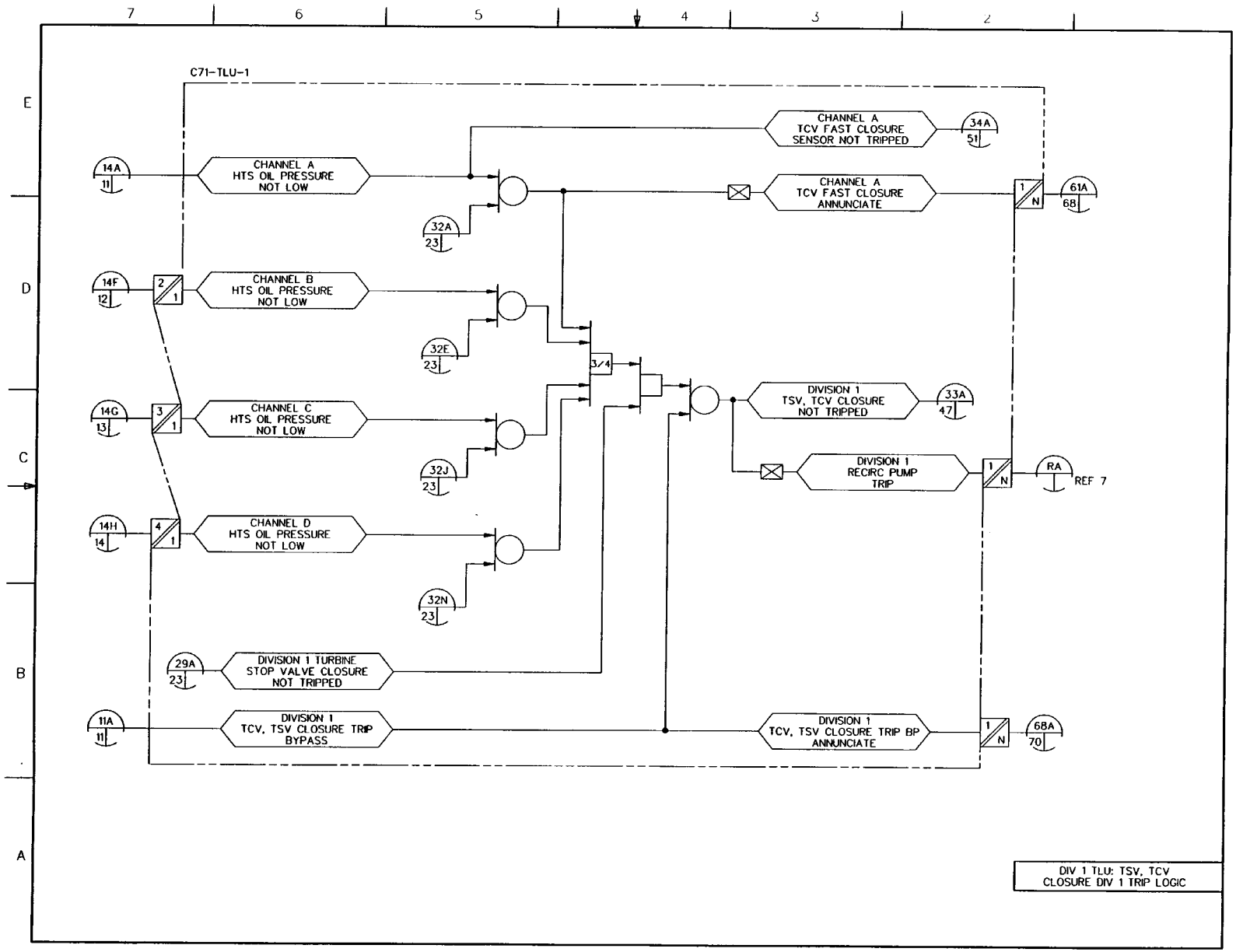

FIGURE 7.2-10 REACTOR PROTECTION SYSTEM IBD (Sheet 27 of 72)

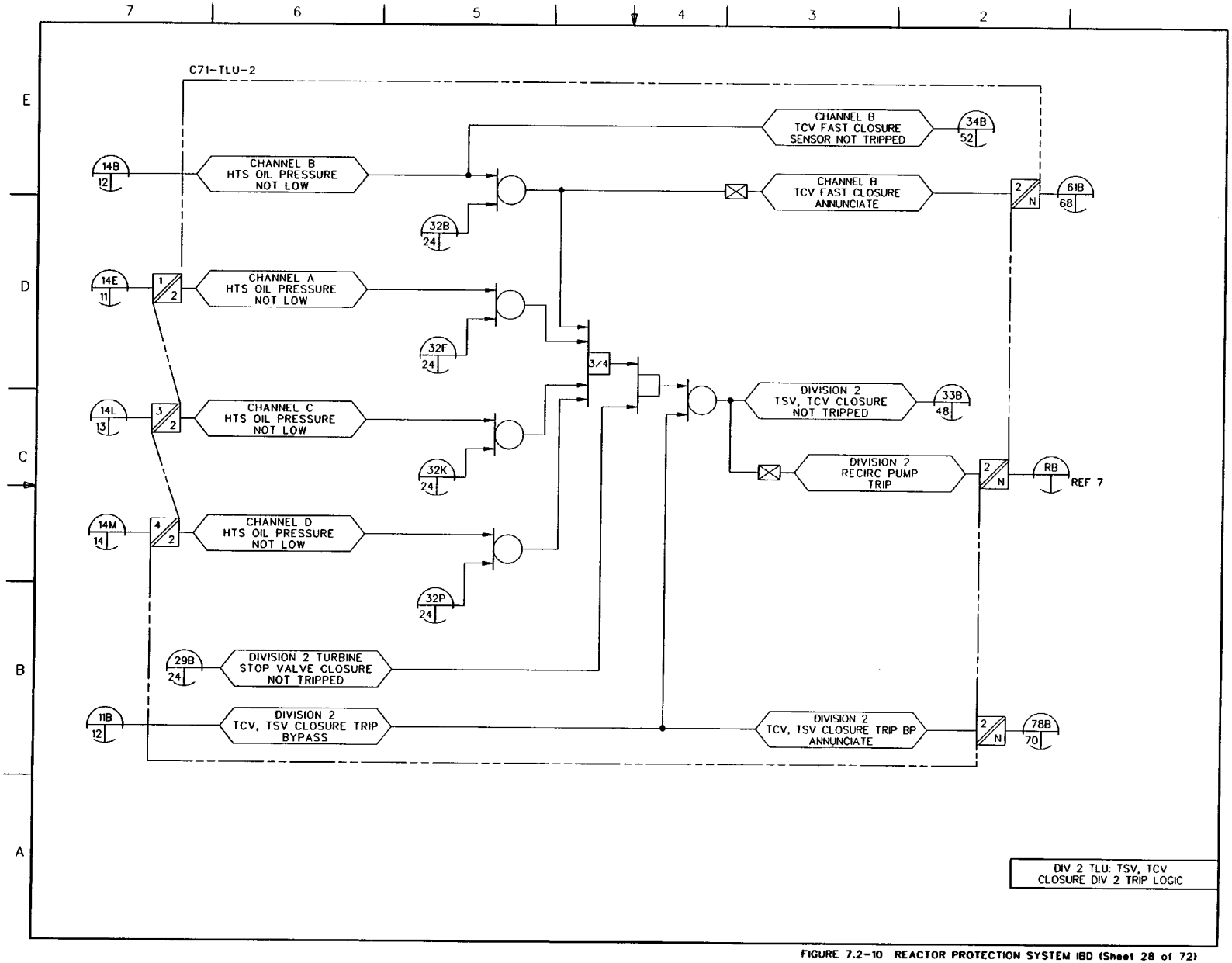

FIGURE 7.2-10 REACTOR PROTECTION SYSTEM IBD (Sheet 28 of 72)

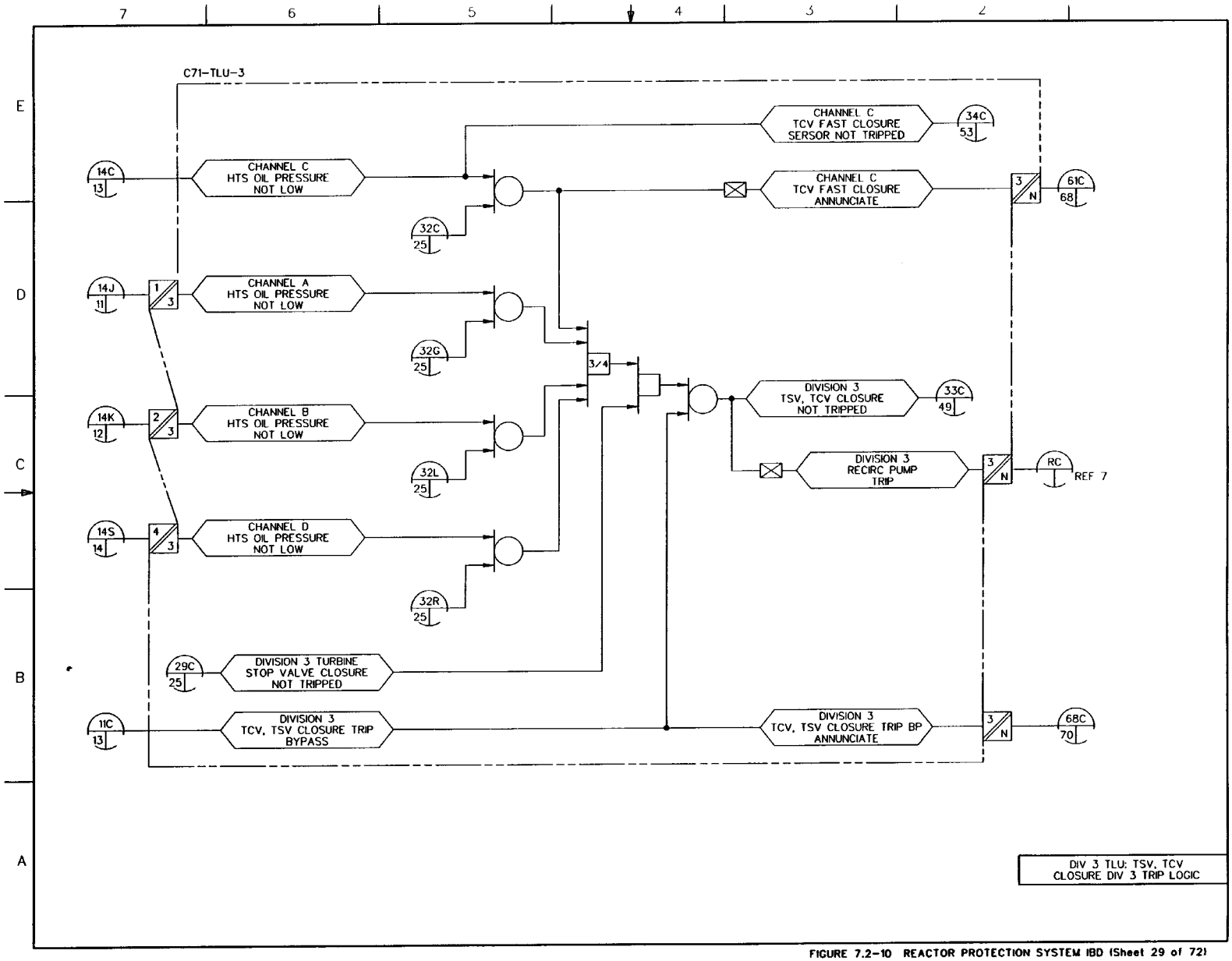

FIGURE 7.2-10 REACTOR PROTECTION SYSTEM IBD (Sheet 29 of 72)

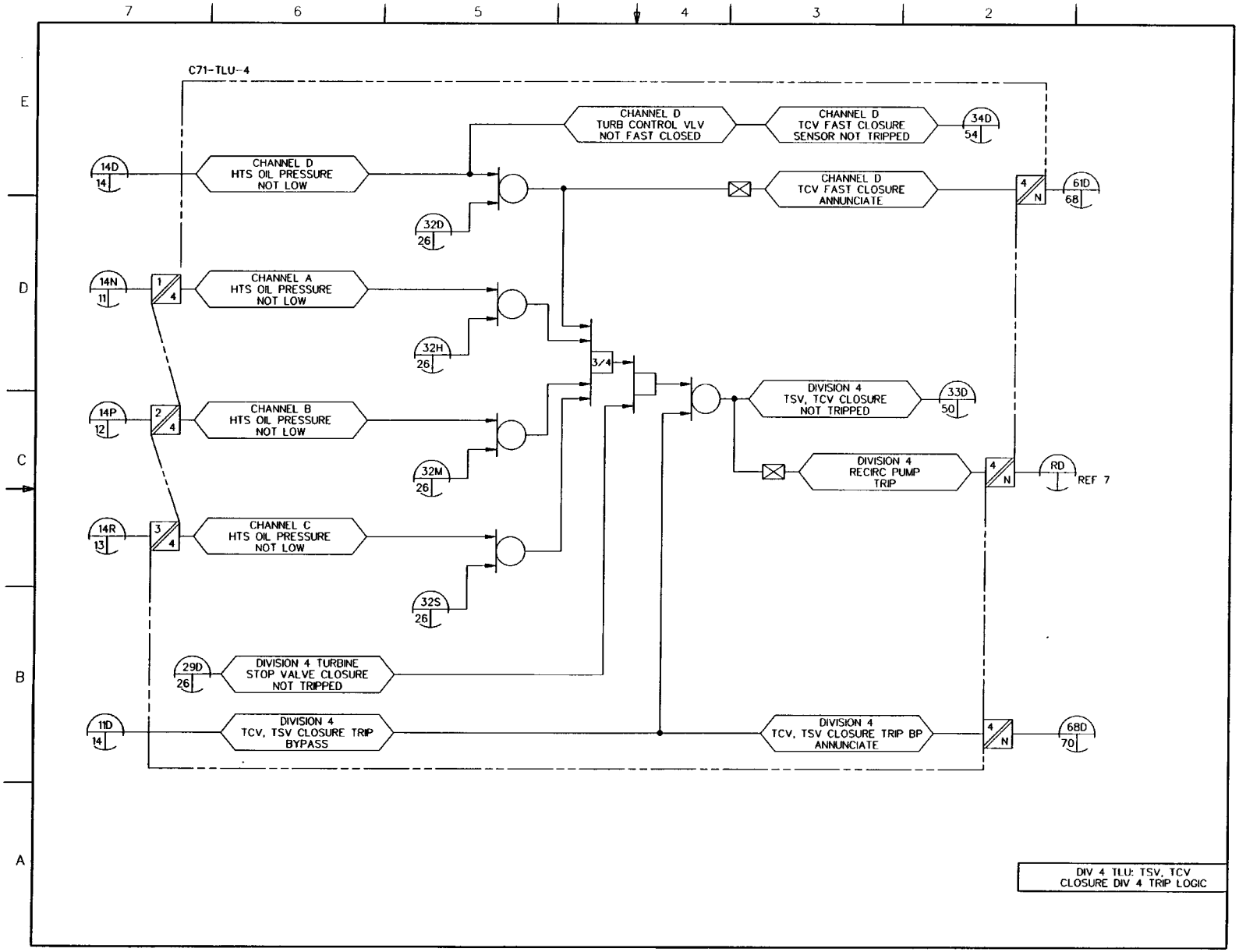

FIGURE 7.2-10 REACTOR PROTECTION SYSTEM IBD (Sheet 30 of 72)

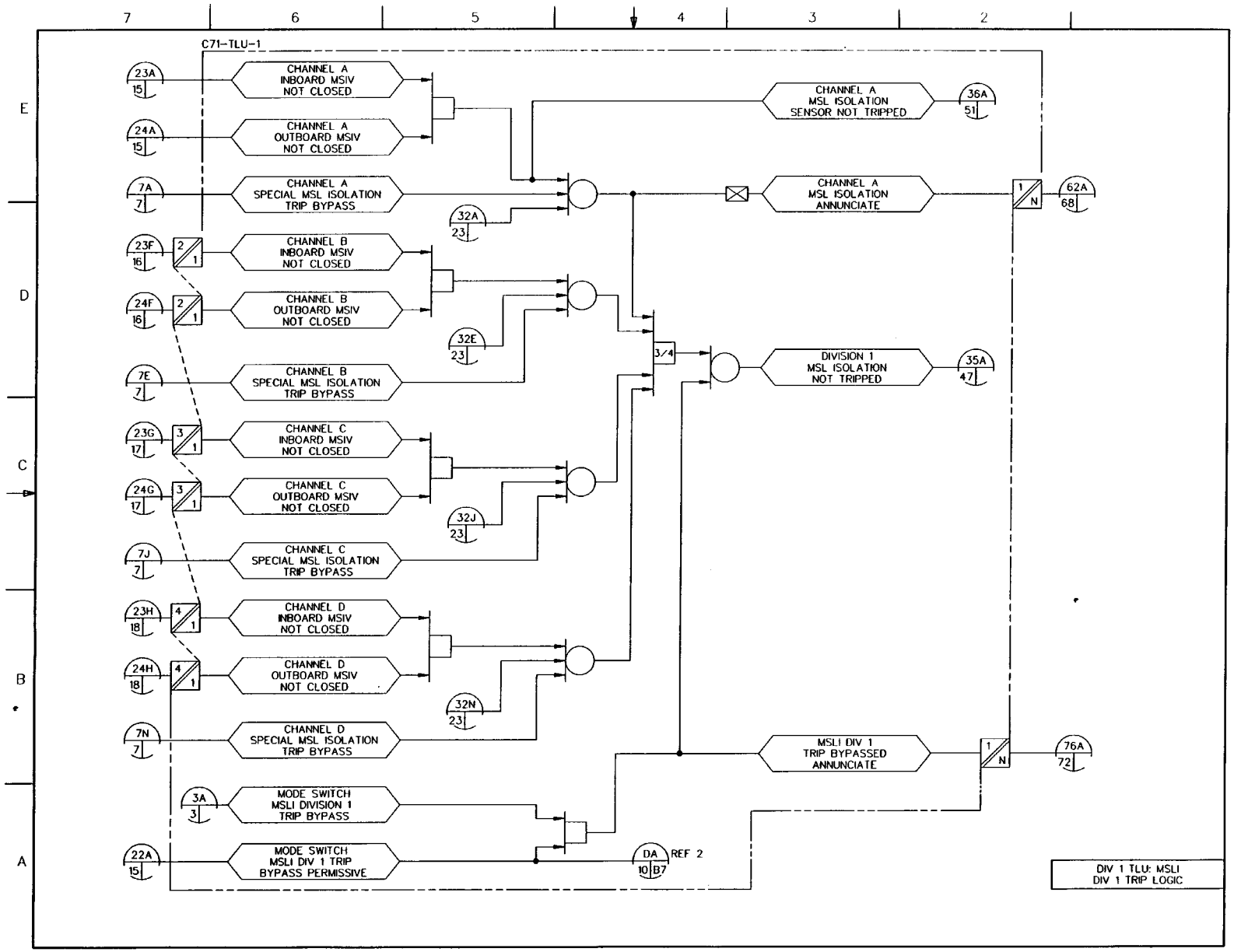

FIGURE 7.2-10 REACTOR PROTECTION SYSTEM IBD (Sheet 31 of 72)

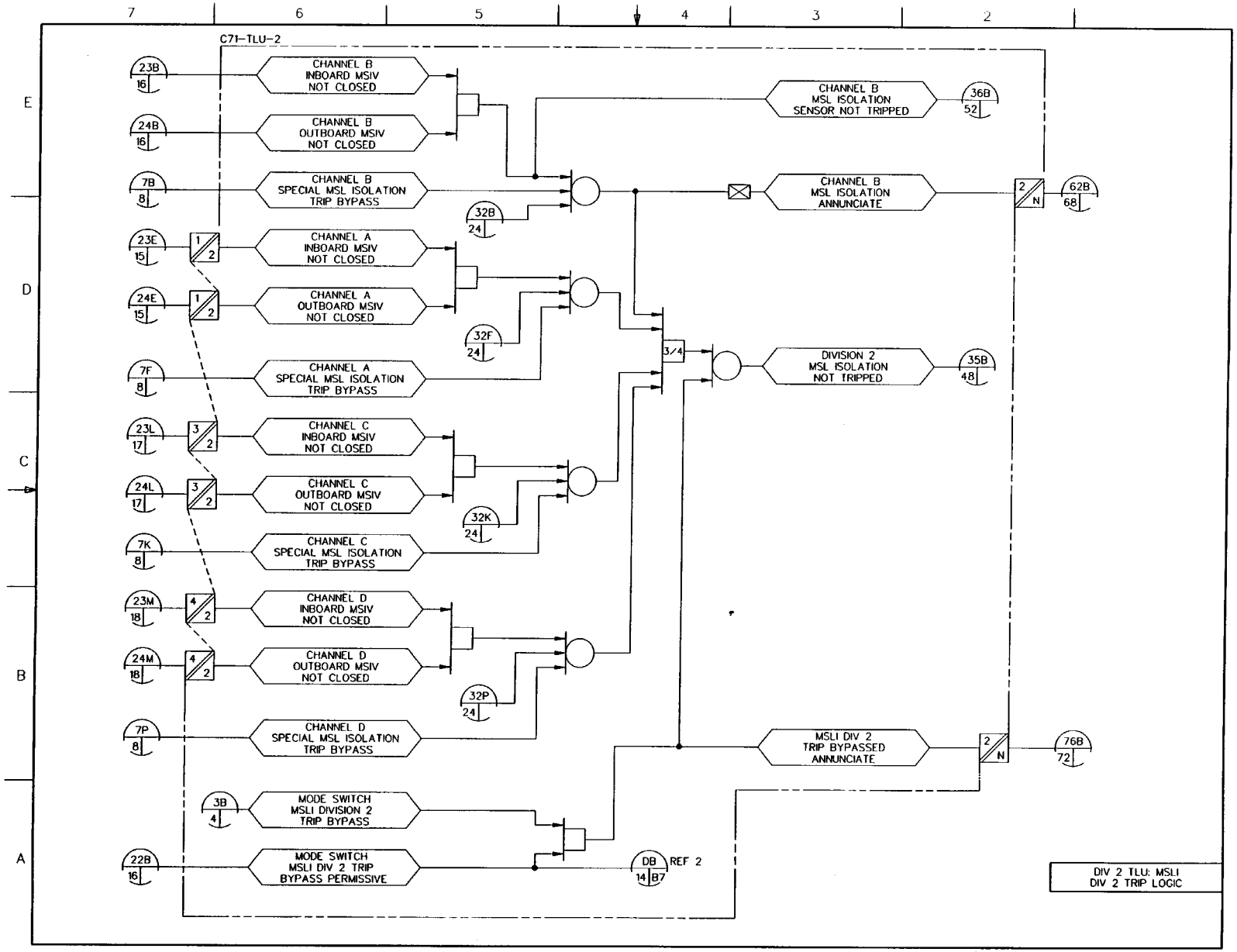

FIGURE 7.2-10 REACTOR PROTECTION SYSTEM IBD (Sheet 32 of 72)

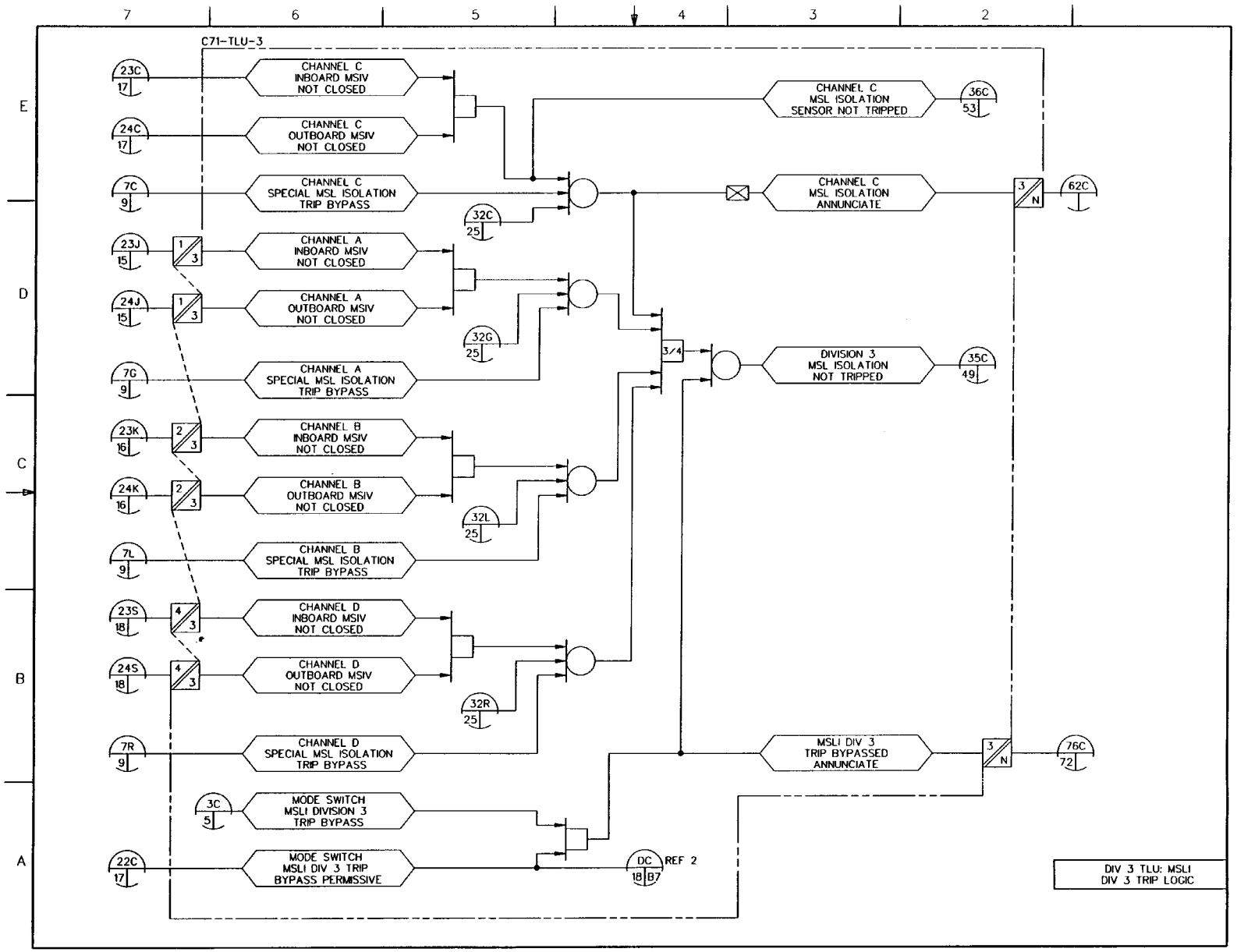

FIGURE 7.2-10 REACTOR PROTECTION SYSTEM IBD (Sheet 33 of 72)

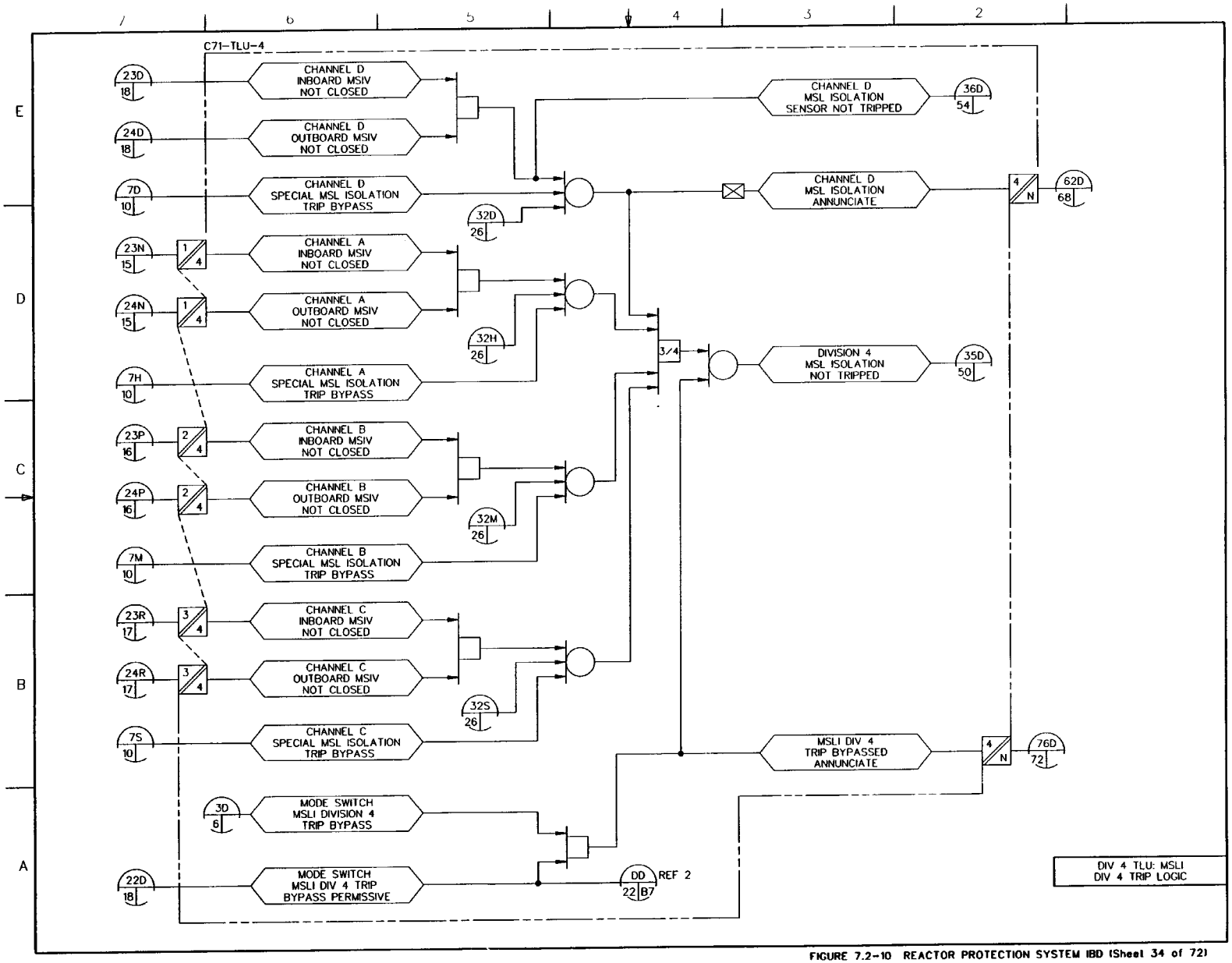

FIGURE 7.2-10 REACTOR PROTECTION SYSTEM IBD (Sheet 34 of 72)

THIS PAGE IS INTENTIONALLY LEFT BLANK

FIGURE 7.2-10 REACTOR PROTECTION SYSTEM IBD (Sheet 35 of 72)

THIS PAGE IS INTENTIONALLY LEFT BLANK

FIGURE 7.2-10 REACTOR PROTECTION SYSTEM IBD (Sheet 36 of 72)

THIS PAGE IS INTENTIONALLY LEFT BLANK

FIGURE 7.2-10 REACTOR PROTECTION SYSTEM IBD (Sheet 37 of 72)

THIS PAGE IS INTENTIONALLY LEFT BLANK

FIGURE 7.2-10 REACTOR PROTECTION SYSTEM IBD (Sheet 38 of 72)

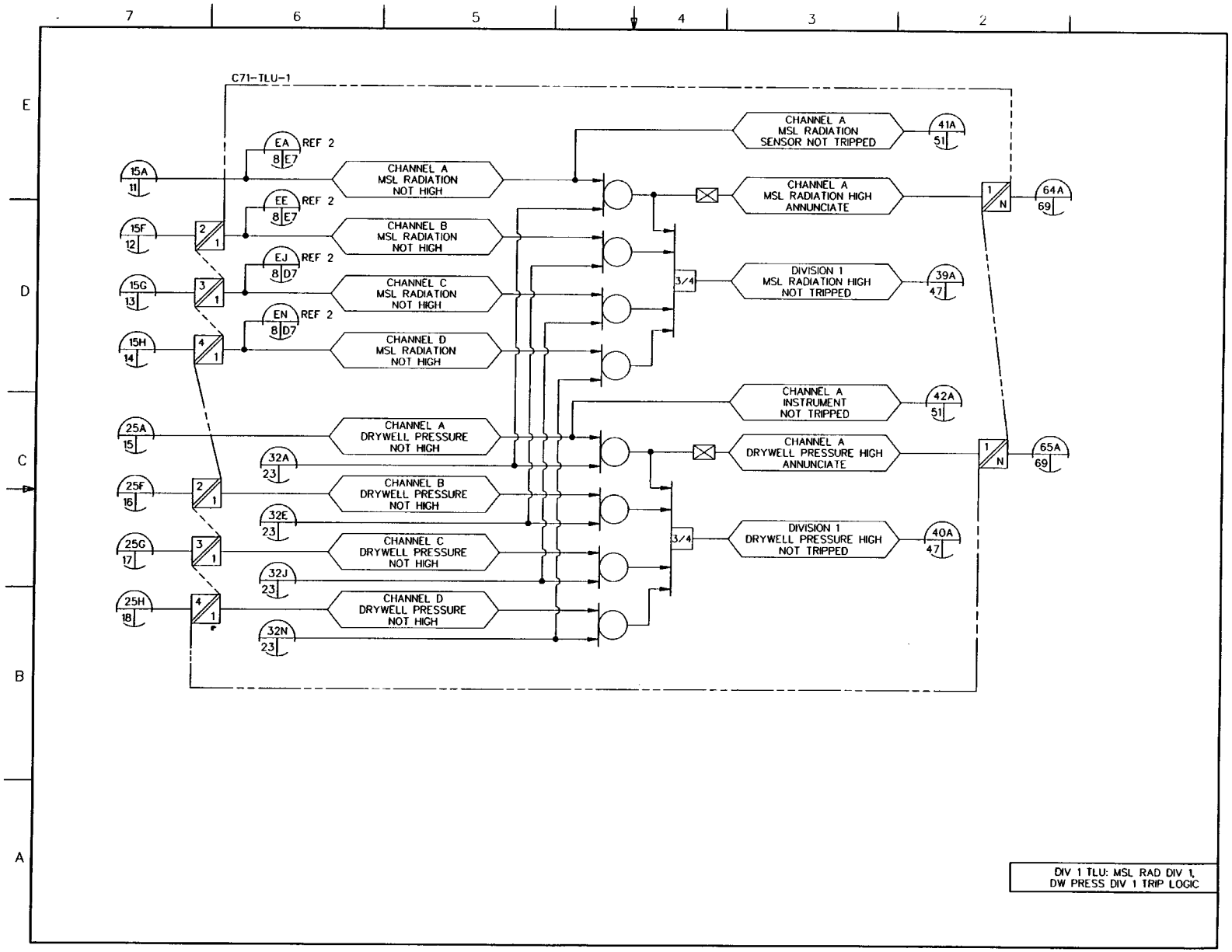

FIGURE 7.2-10 REACTOR PROTECTION SYSTEM IBD (Sheet 39 of 72)

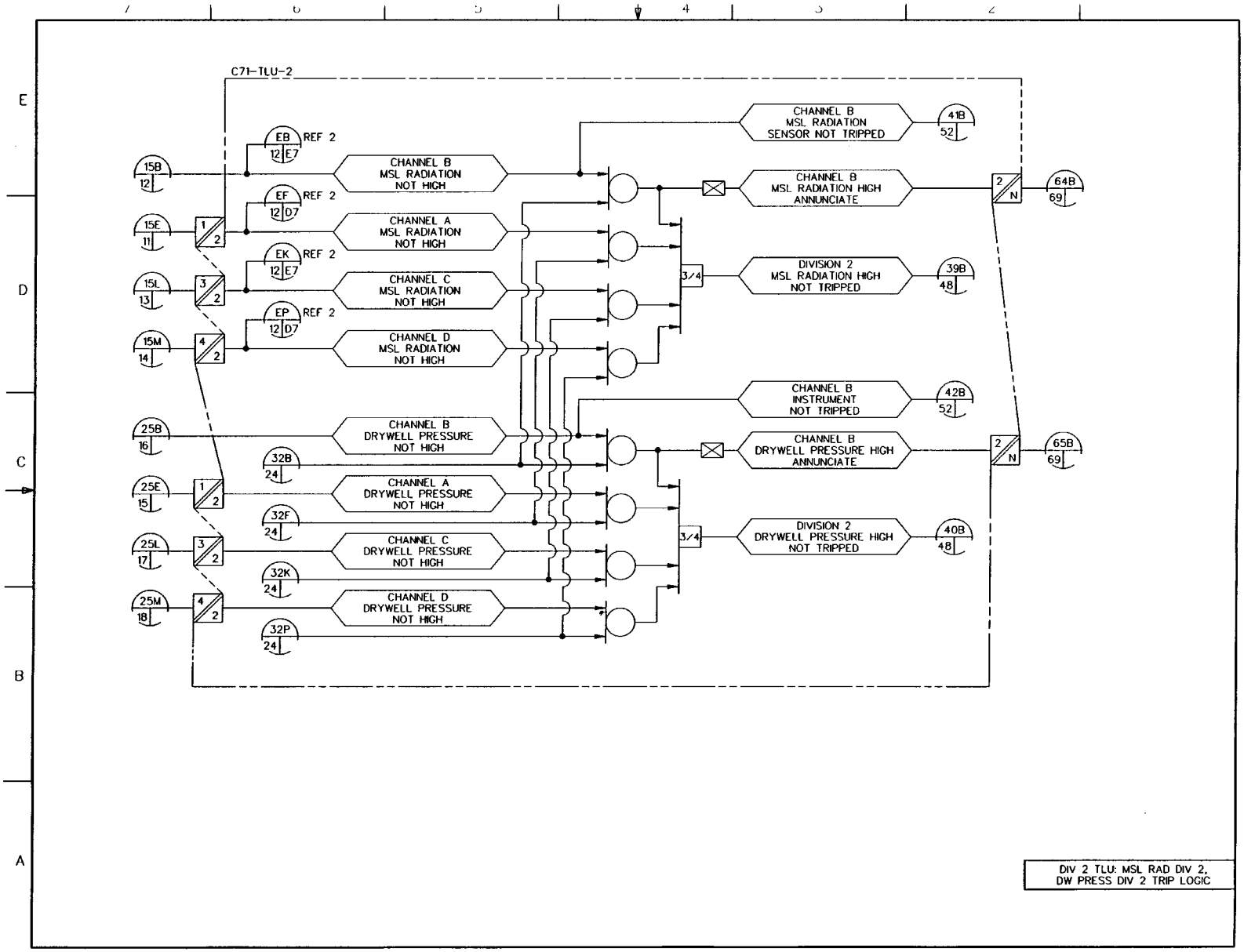

FIGURE 7.2-10 REACTOR PROTECTION SYSTEM IBD (Sheet 40 of 72)

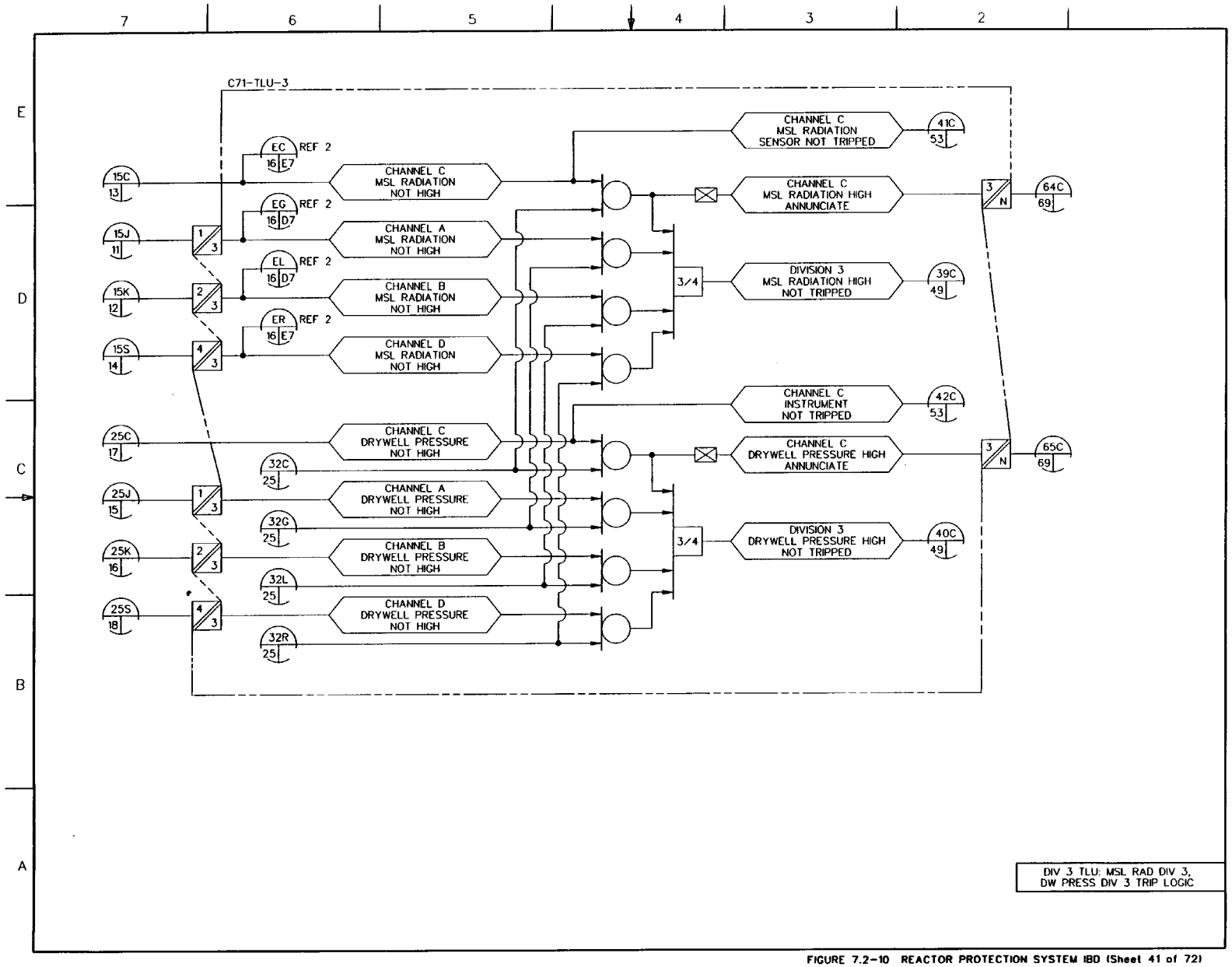

FIGURE 7.2-10 REACTOR PROTECTION SYSTEM IBD (Sheet 41 of 72)

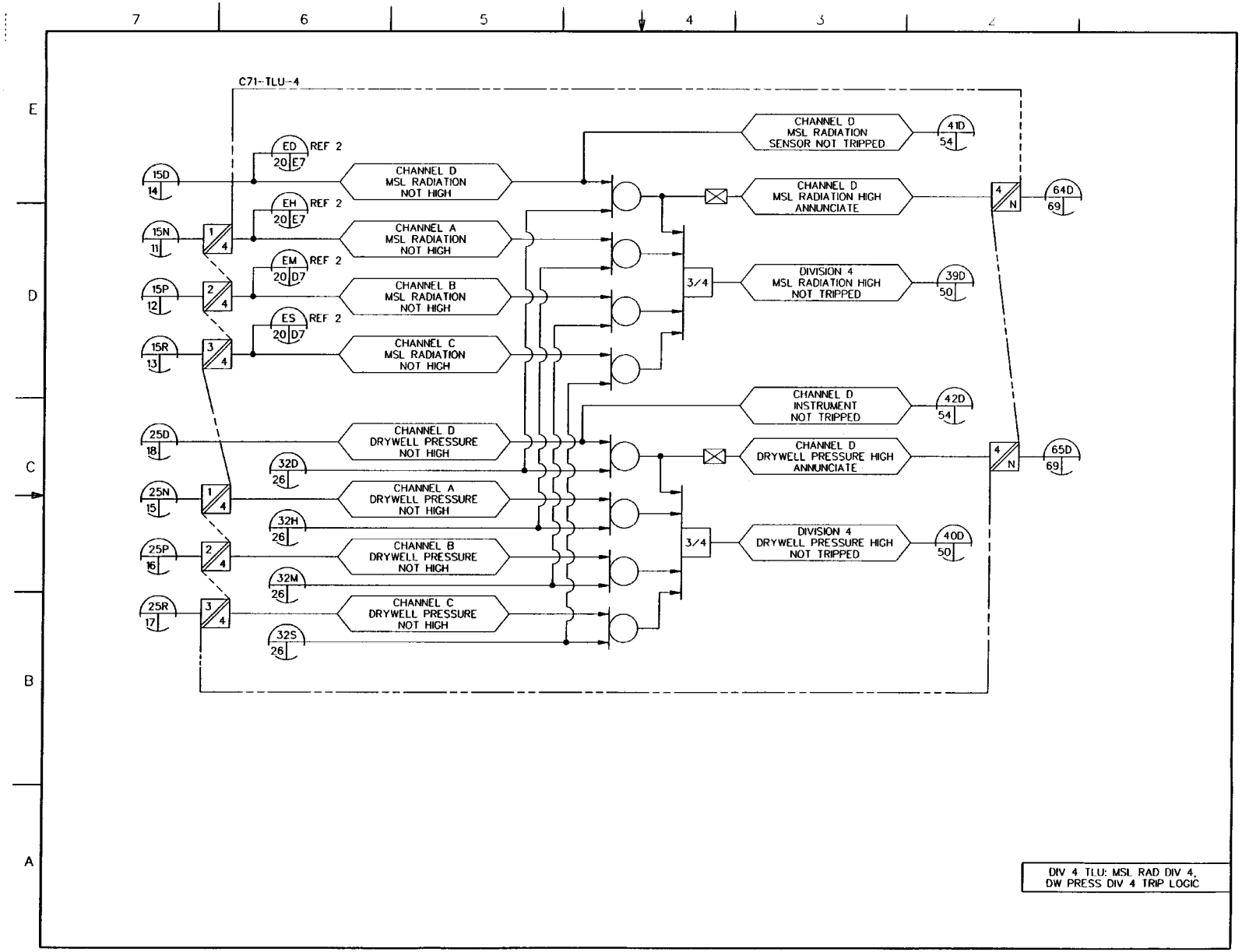

FIGURE 7.2-10 REACTOR PROTECTION SYSTEM IBD (Sheet 42 of 72)

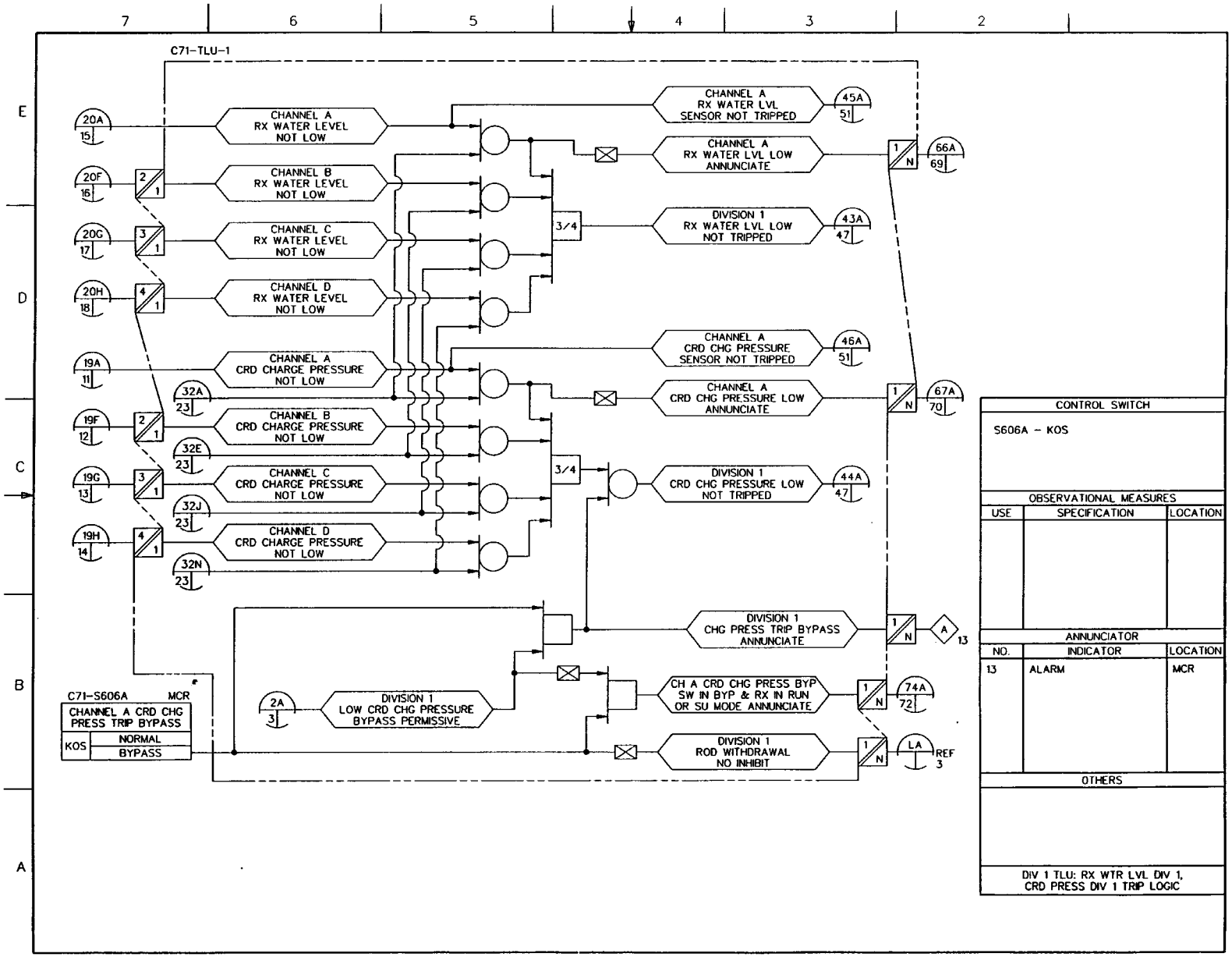

FIGURE 7.2-10 REACTOR PROTECTION SYSTEM IBD (Sheet 43 of 72)

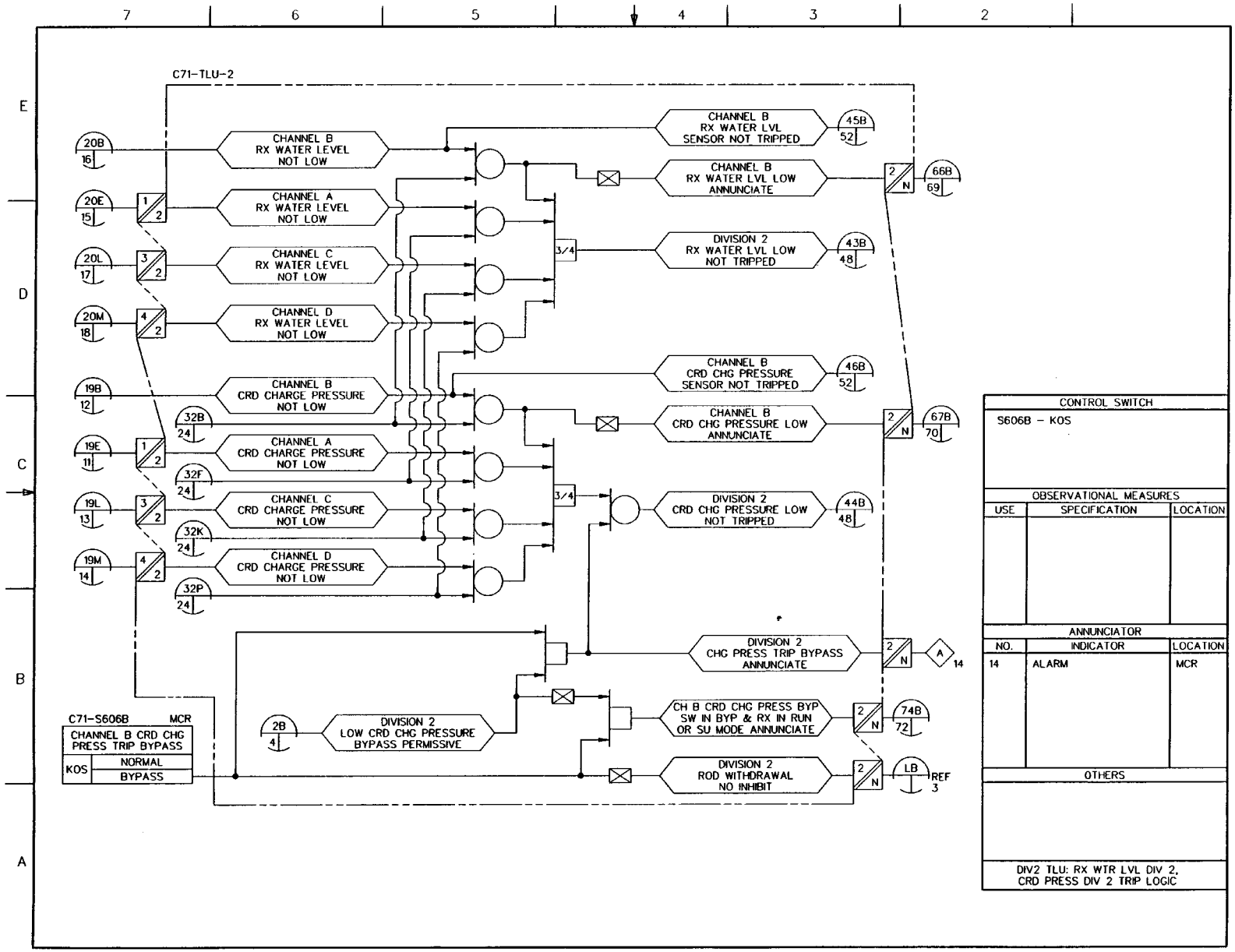

FIGURE 7.2-10 REACTOR PROTECTION SYSTEM IBD (Sheet 44 of 72)

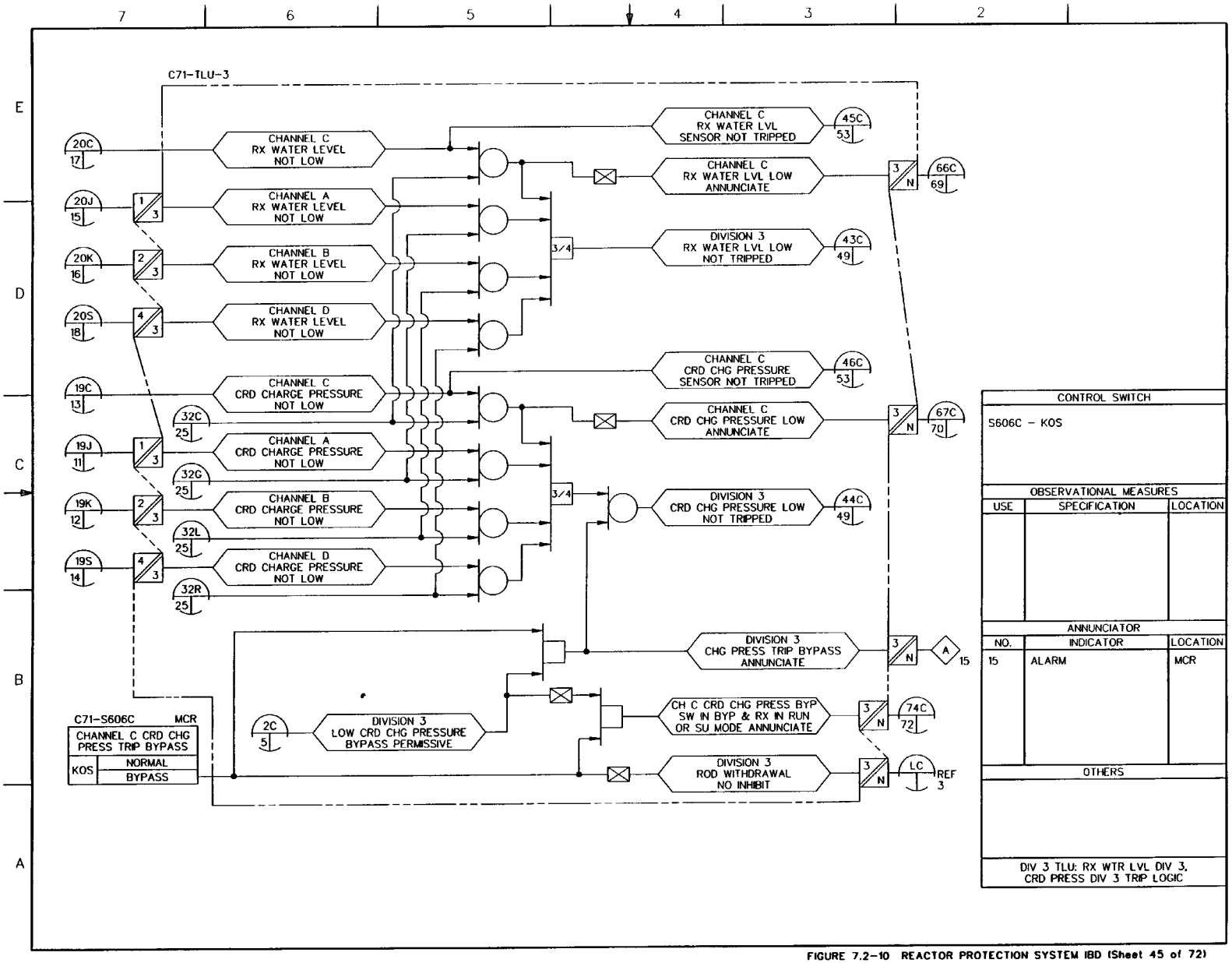

FIGURE 7.2-10 REACTOR PROTECTION SYSTEM IBD (Sheet 45 of 72)

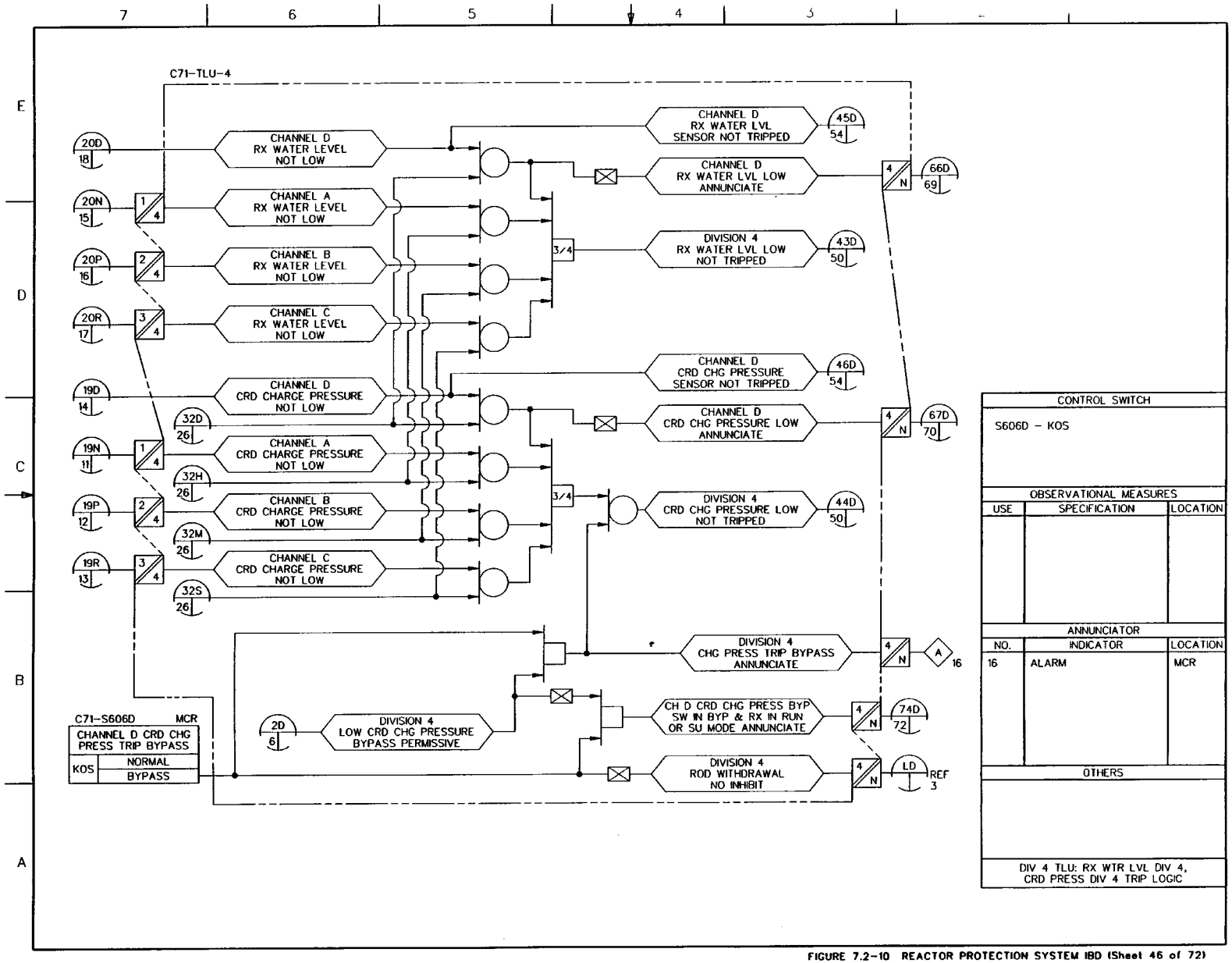

FIGURE 7.2-10 REACTOR PROTECTION SYSTEM IBD (Sheet 46 of 72)

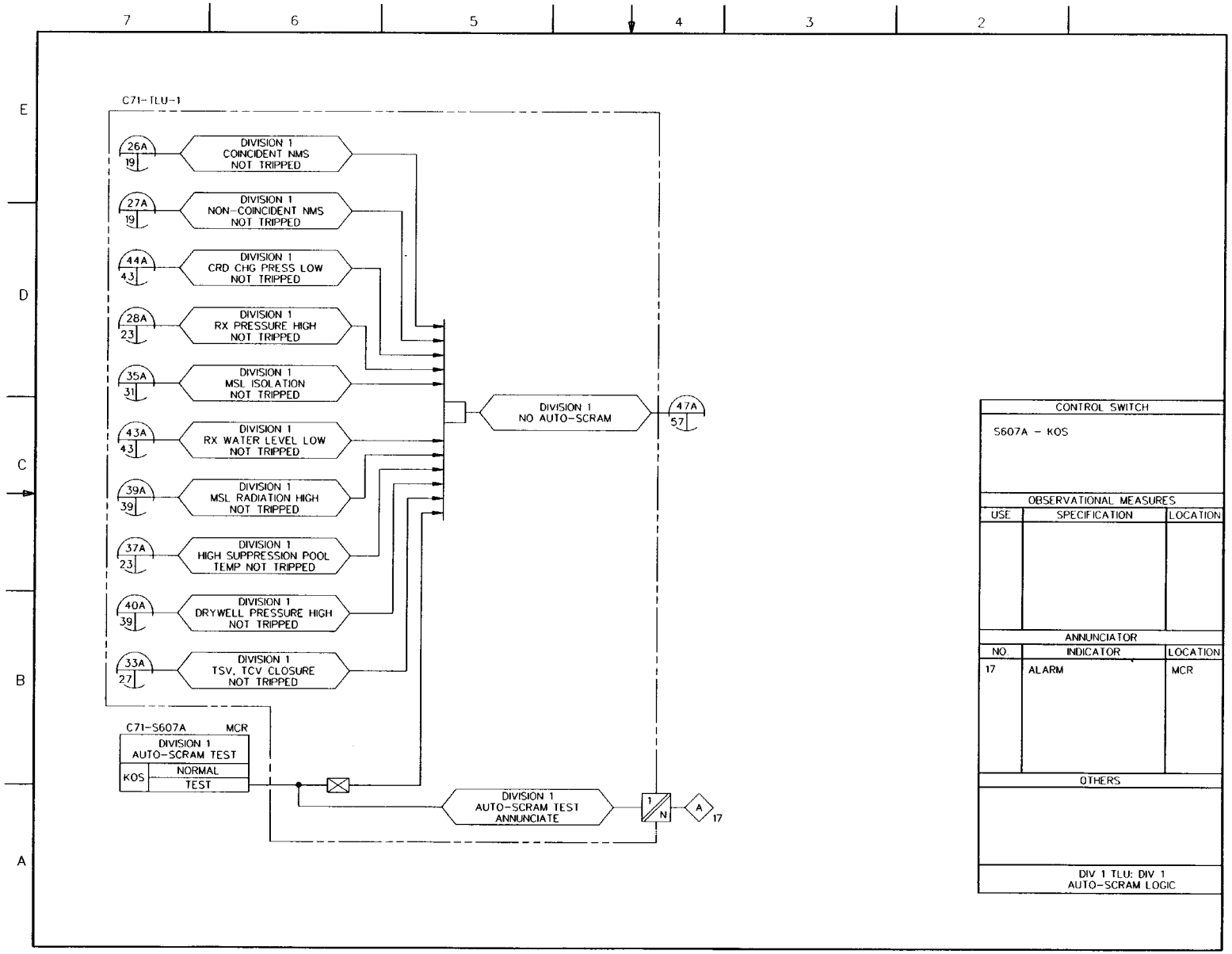

FIGURE 7.2-10 REACTOR PROTECTION SYSTEM IBD (Sheet 47 of 72)

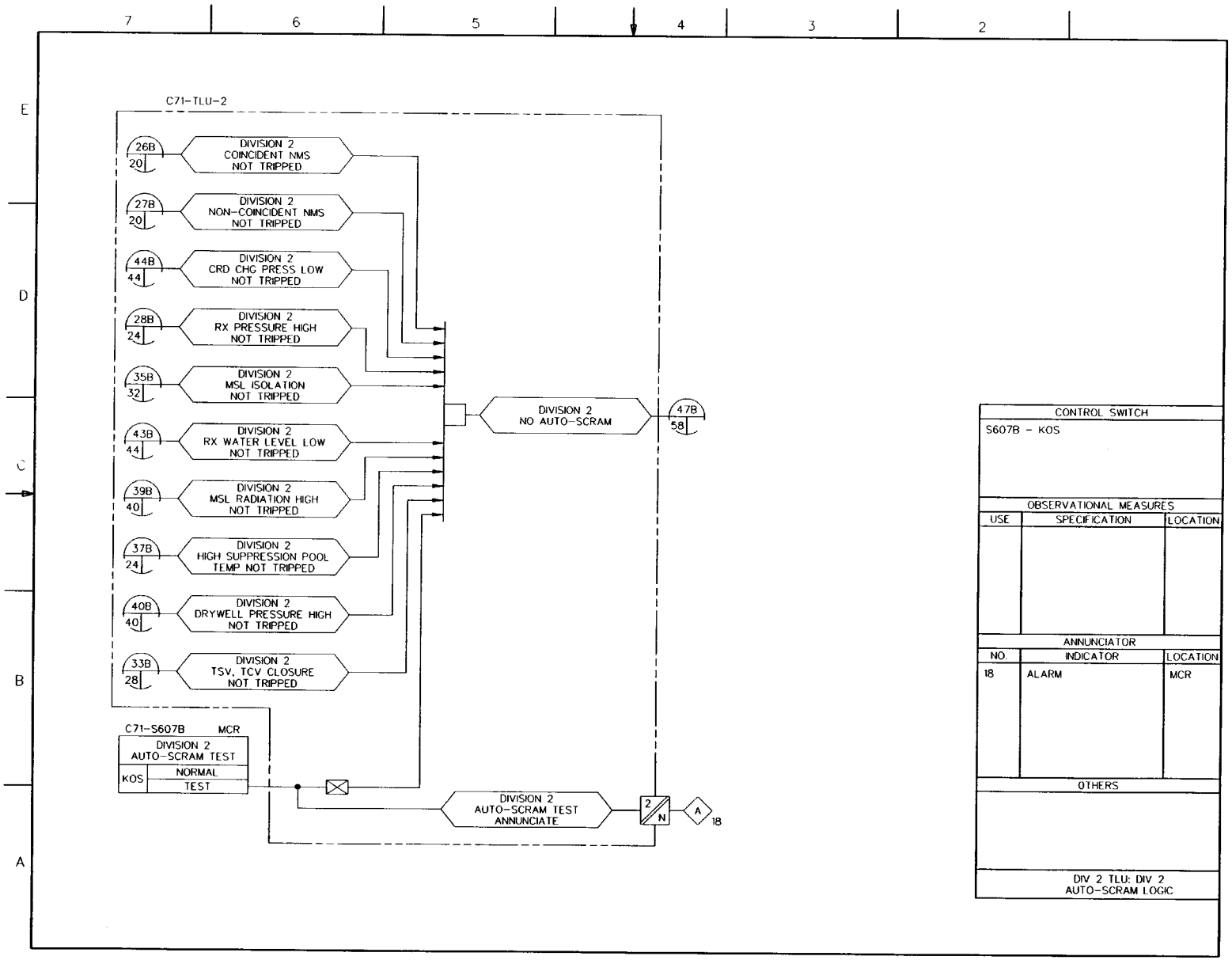

FIGURE 7.2-10 REACTOR PROTECTION SYSTEM IBD (Sheet 48 of 72)

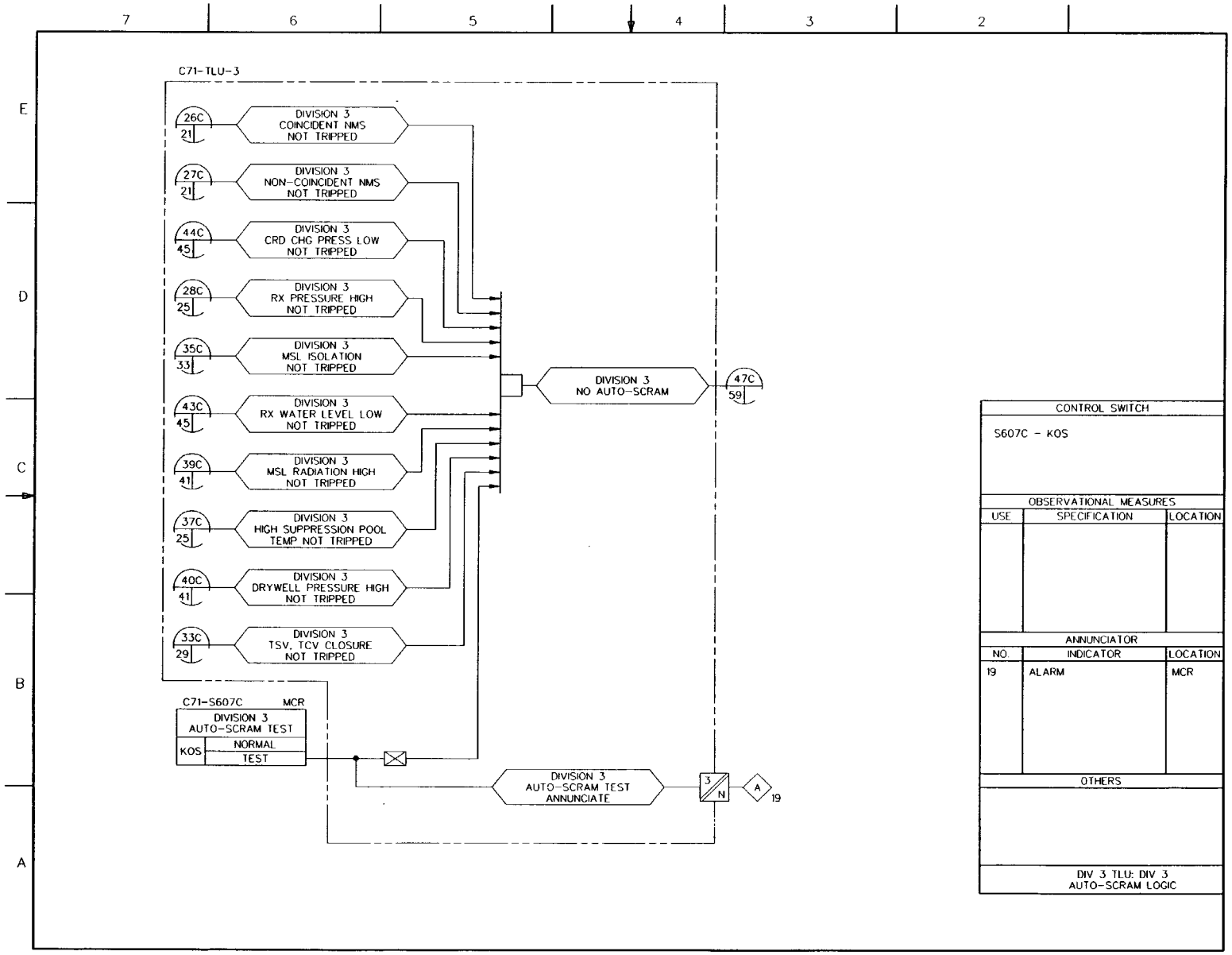

FIGURE 7.2-10 REACTOR PROTECTION SYSTEM IBD (Sheet 49 of 72)

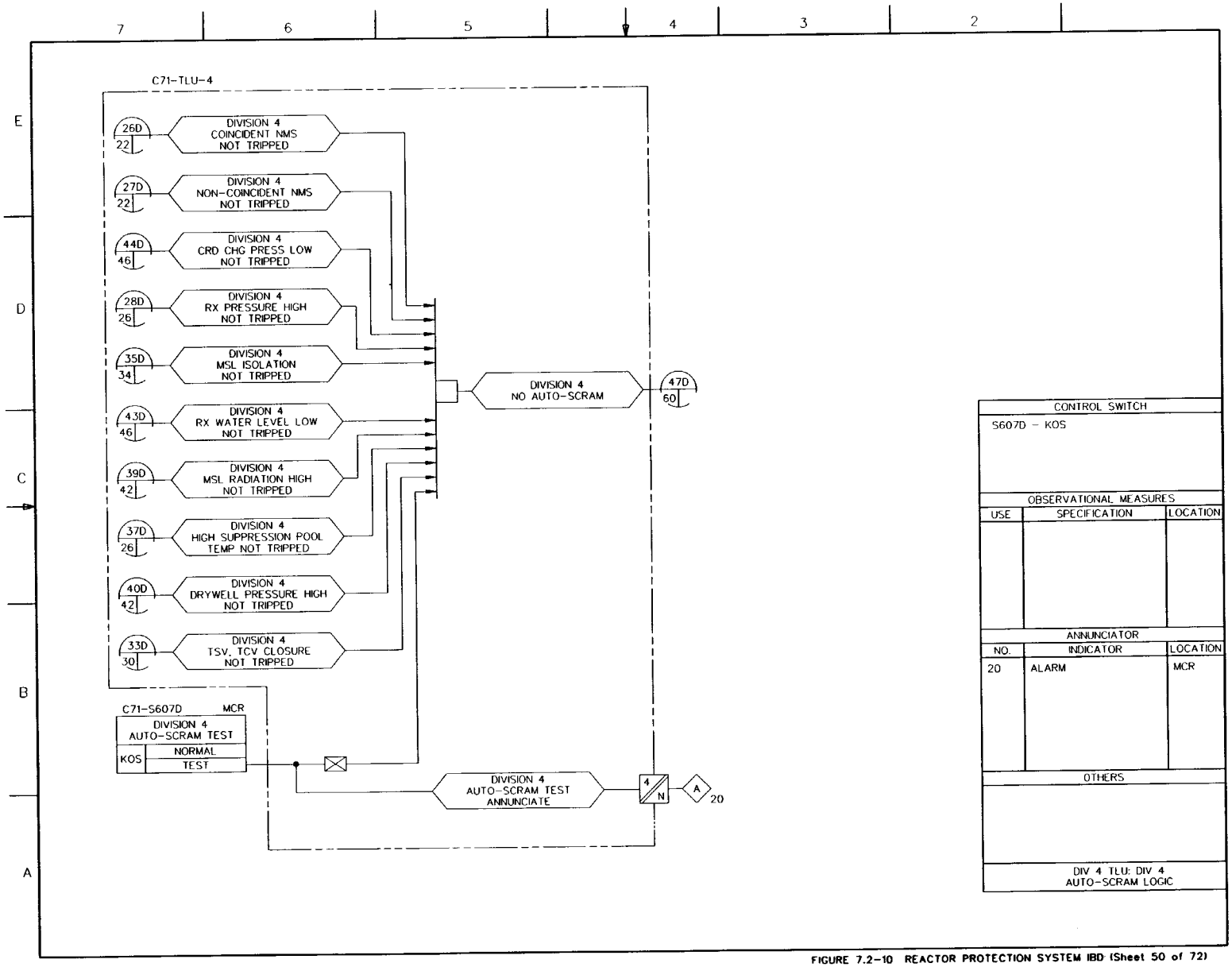

FIGURE 7.2-10 REACTOR PROTECTION SYSTEM IBD (Sheet 50 of 72)

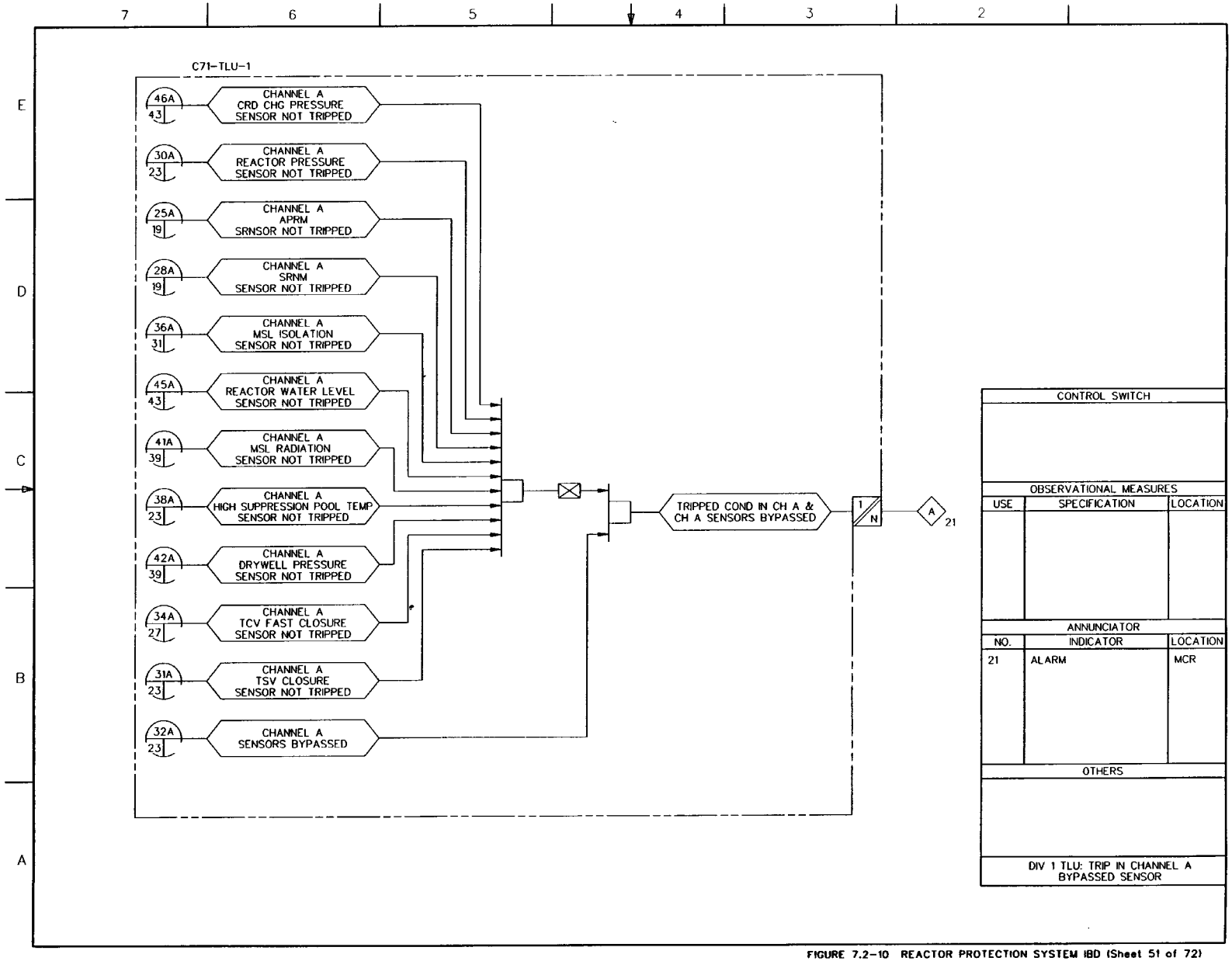

FIGURE 7.2-10 REACTOR PROTECTION SYSTEM IBD (Sheet 51 of 72)

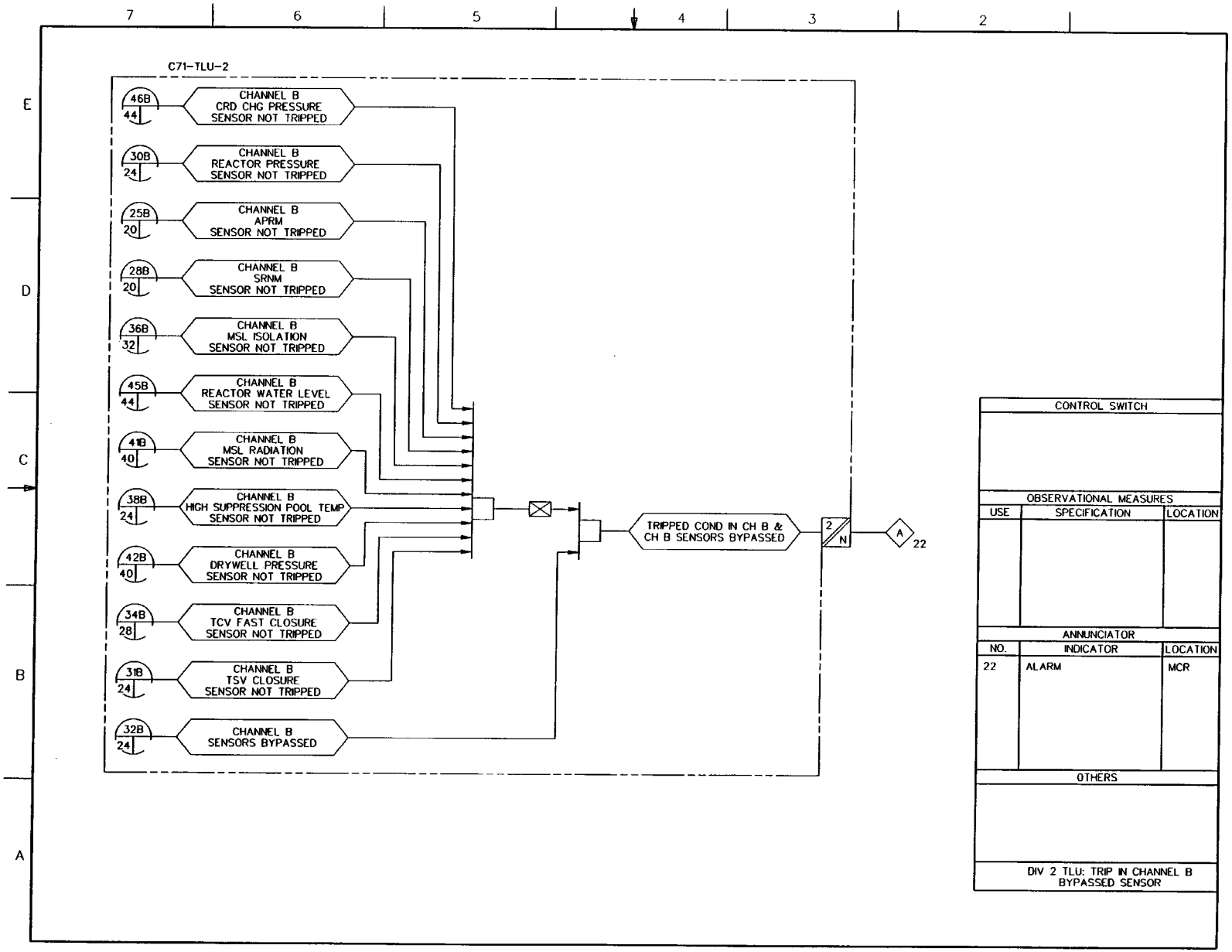

FIGURE 7.2-10 REACTOR PROTECTION SYSTEM IBD (Sheet 52 of 72)

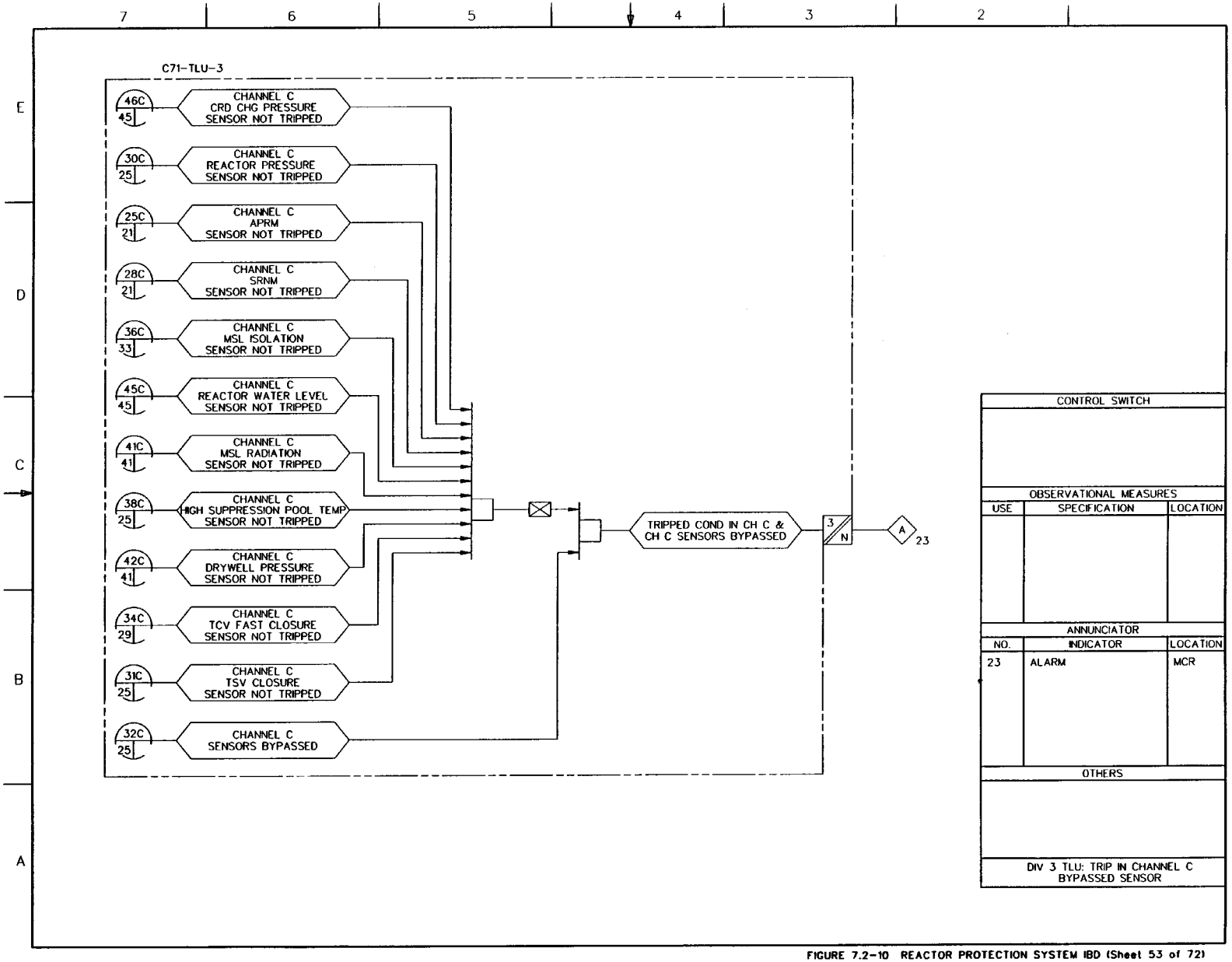

FIGURE 7.2-10 REACTOR PROTECTION SYSTEM IBD (Sheet 53 of 72)

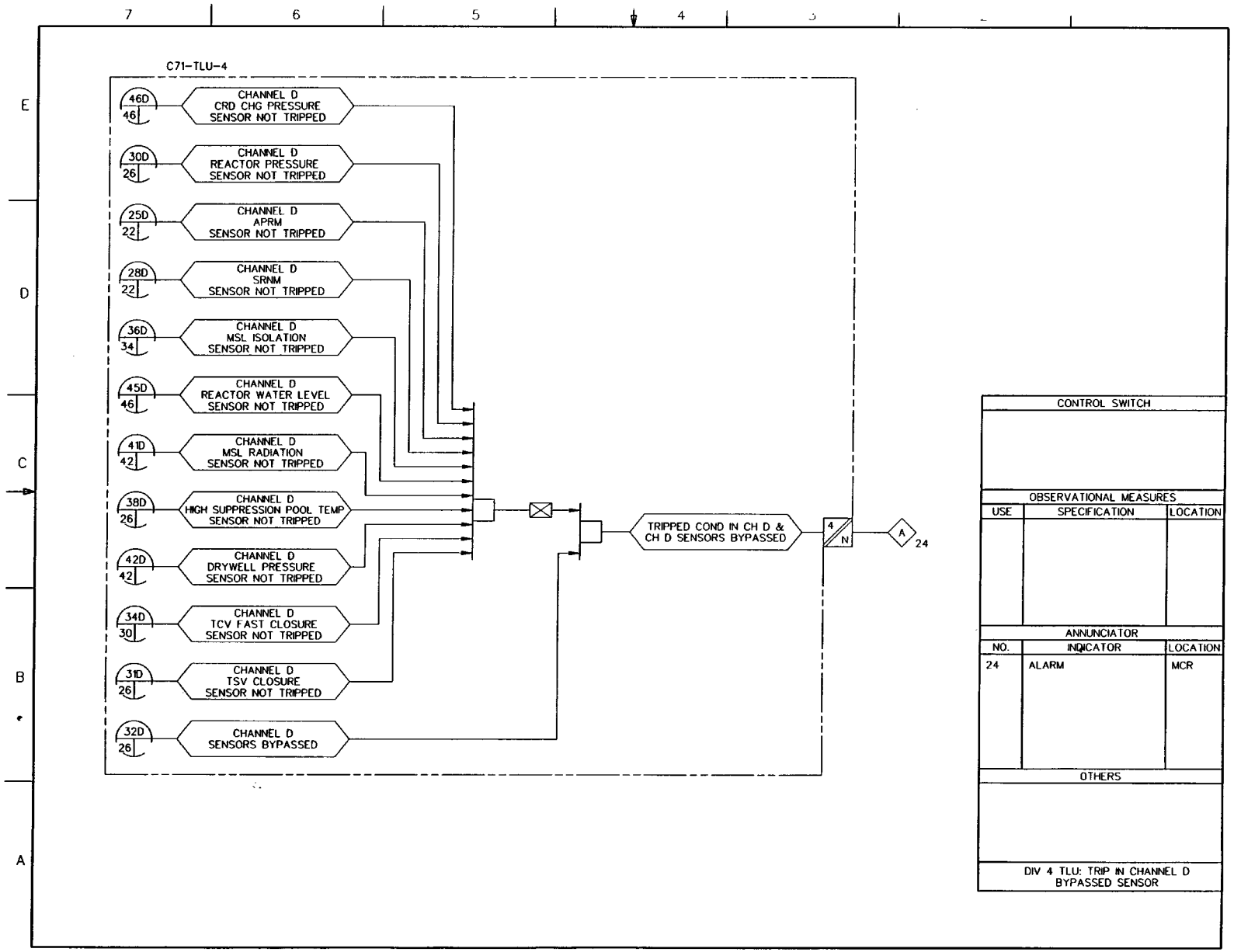

FIGURE 7.2-10 REACTOR PROTECTION SYSTEM IBD (Sheet 54 of 72)

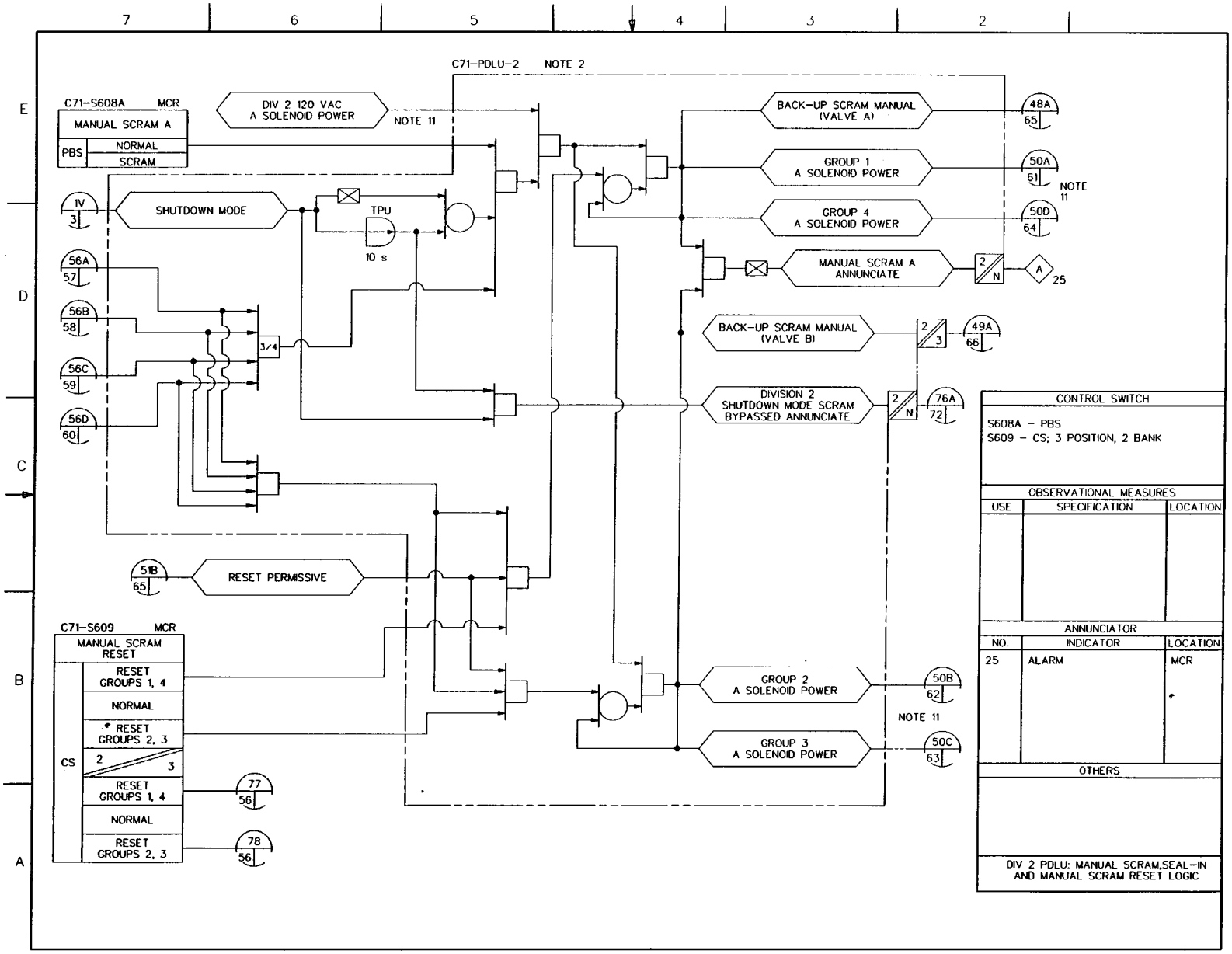

FIGURE 7.2-10 REACTOR PROTECTION SYSTEM IBD (Sheet 55 of 72)

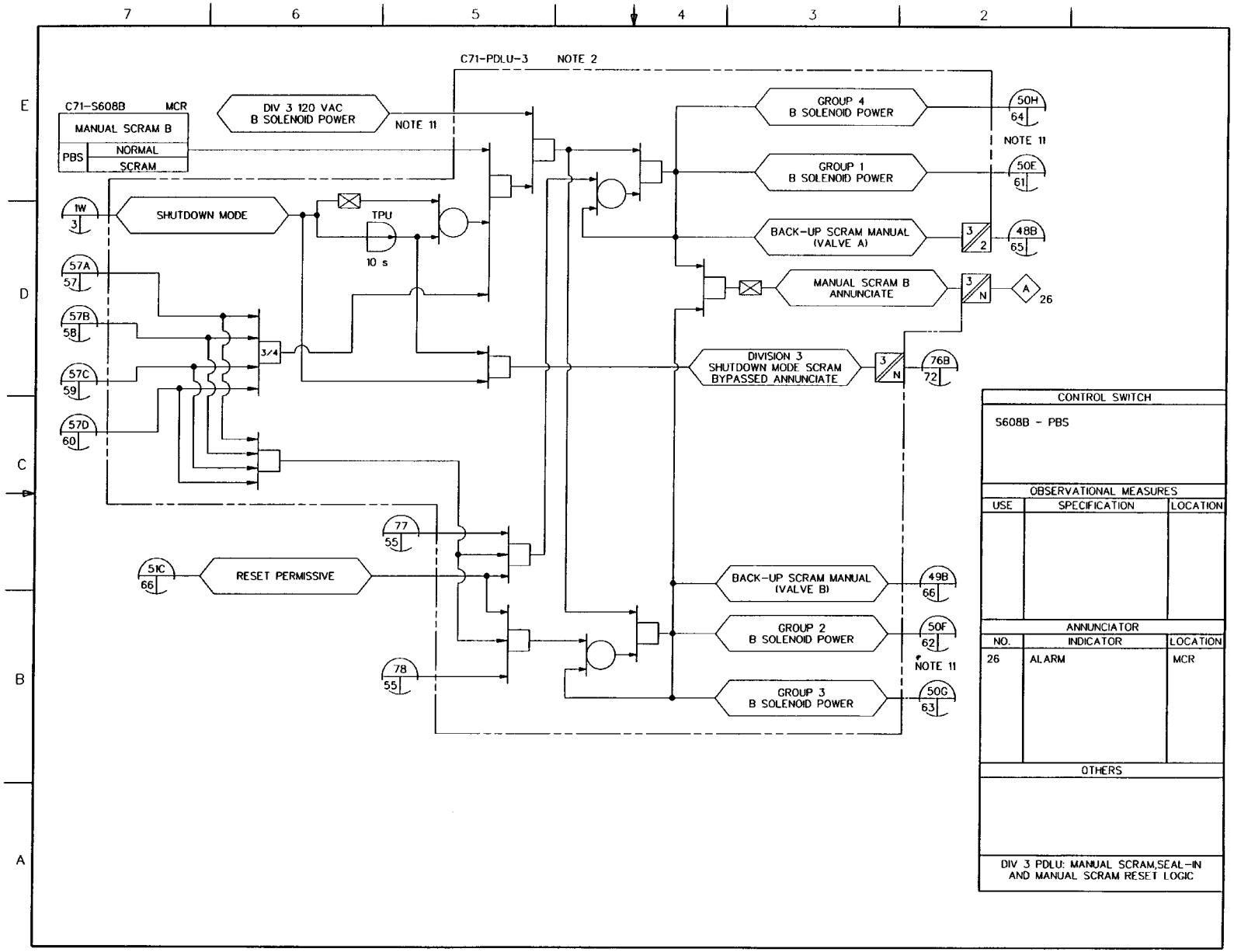

FIGURE 7.2-10 REACTOR PROTECTION SYSTEM IBD (Sheet 56 of 72)

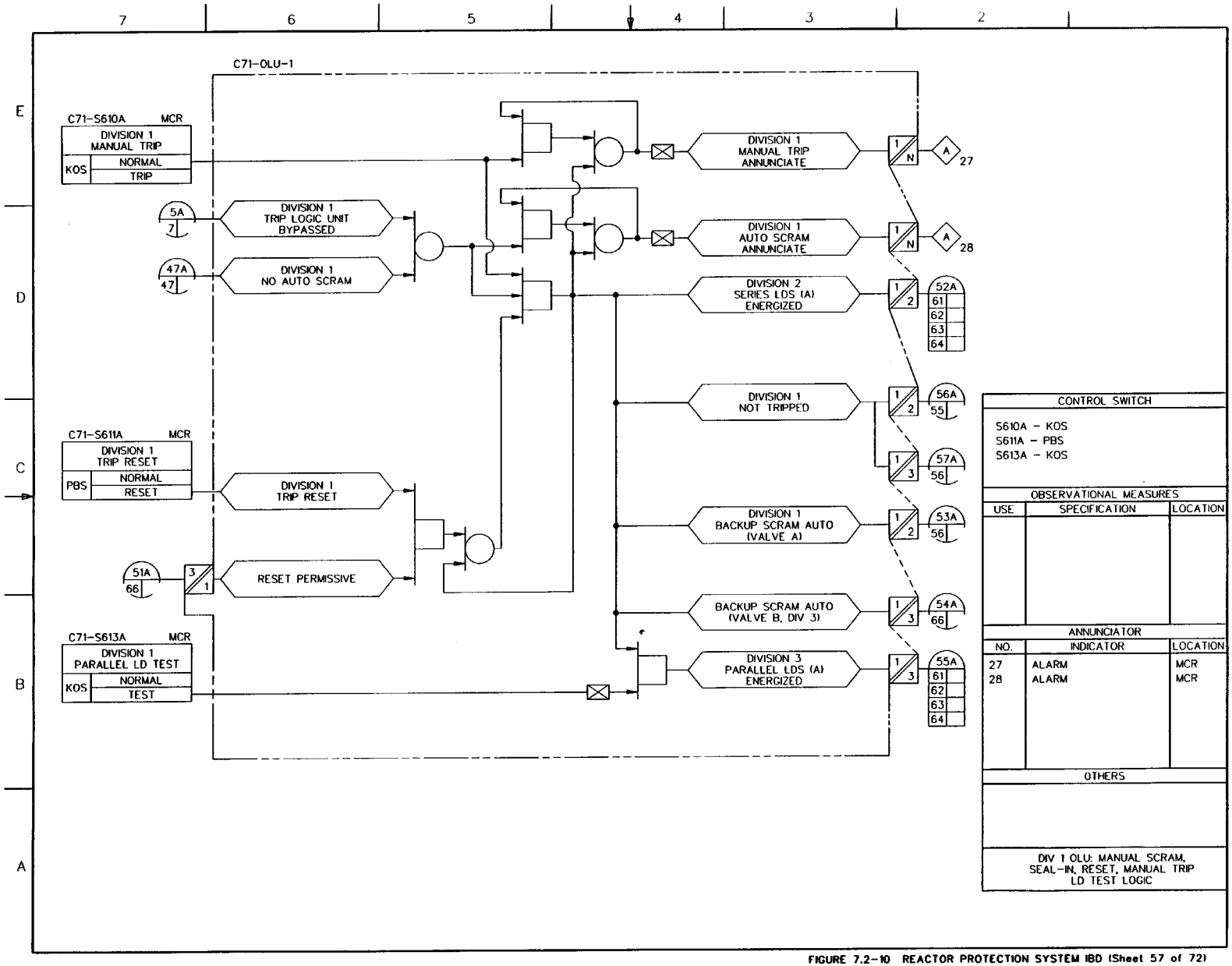

FIGURE 7.2-10 REACTOR PROTECTION SYSTEM IBD (Sheet 57 of 72)

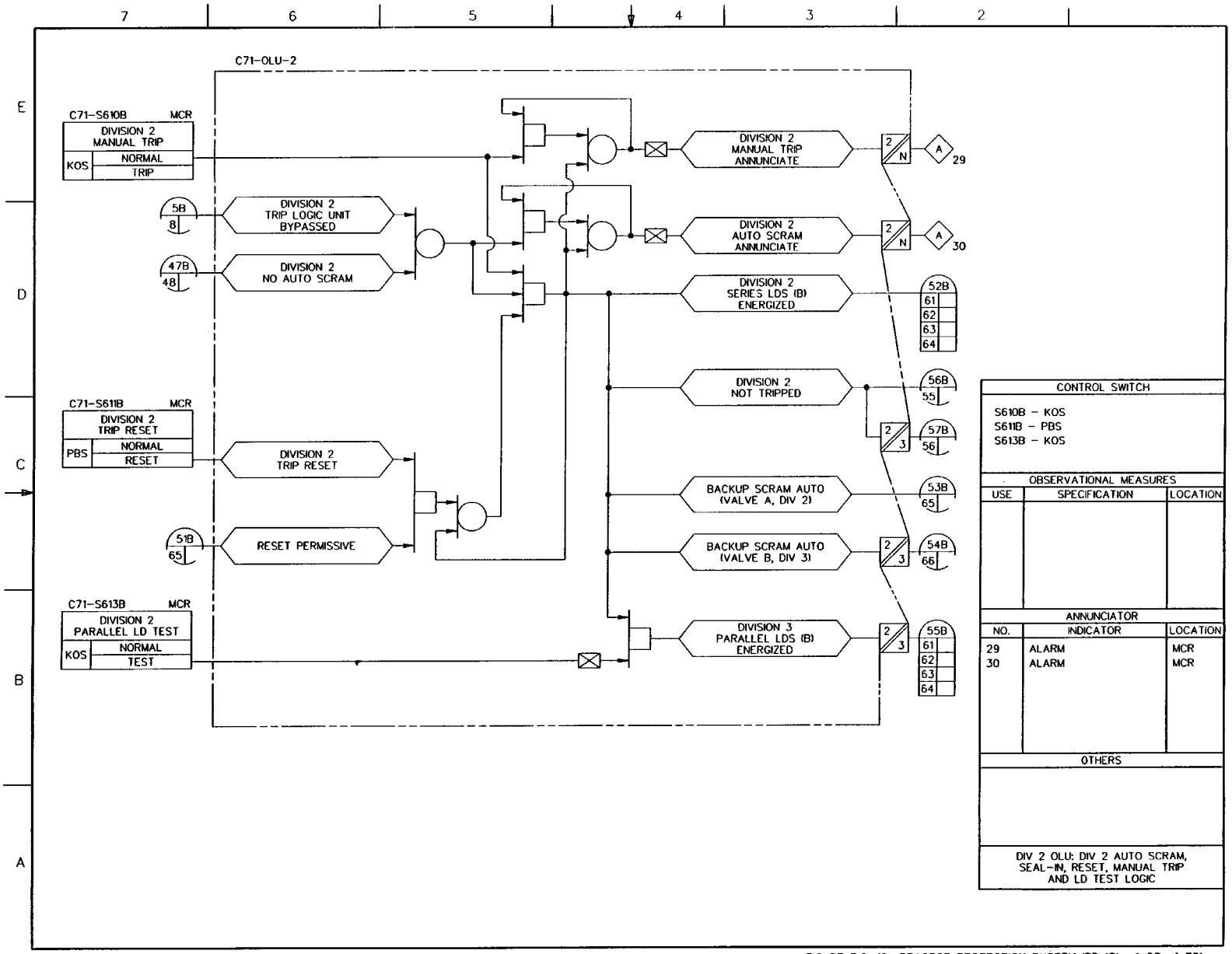

FIGURE 7.2-10 REACTOR PROTECTION SYSTEM IBD (Sheet 58 of 72)

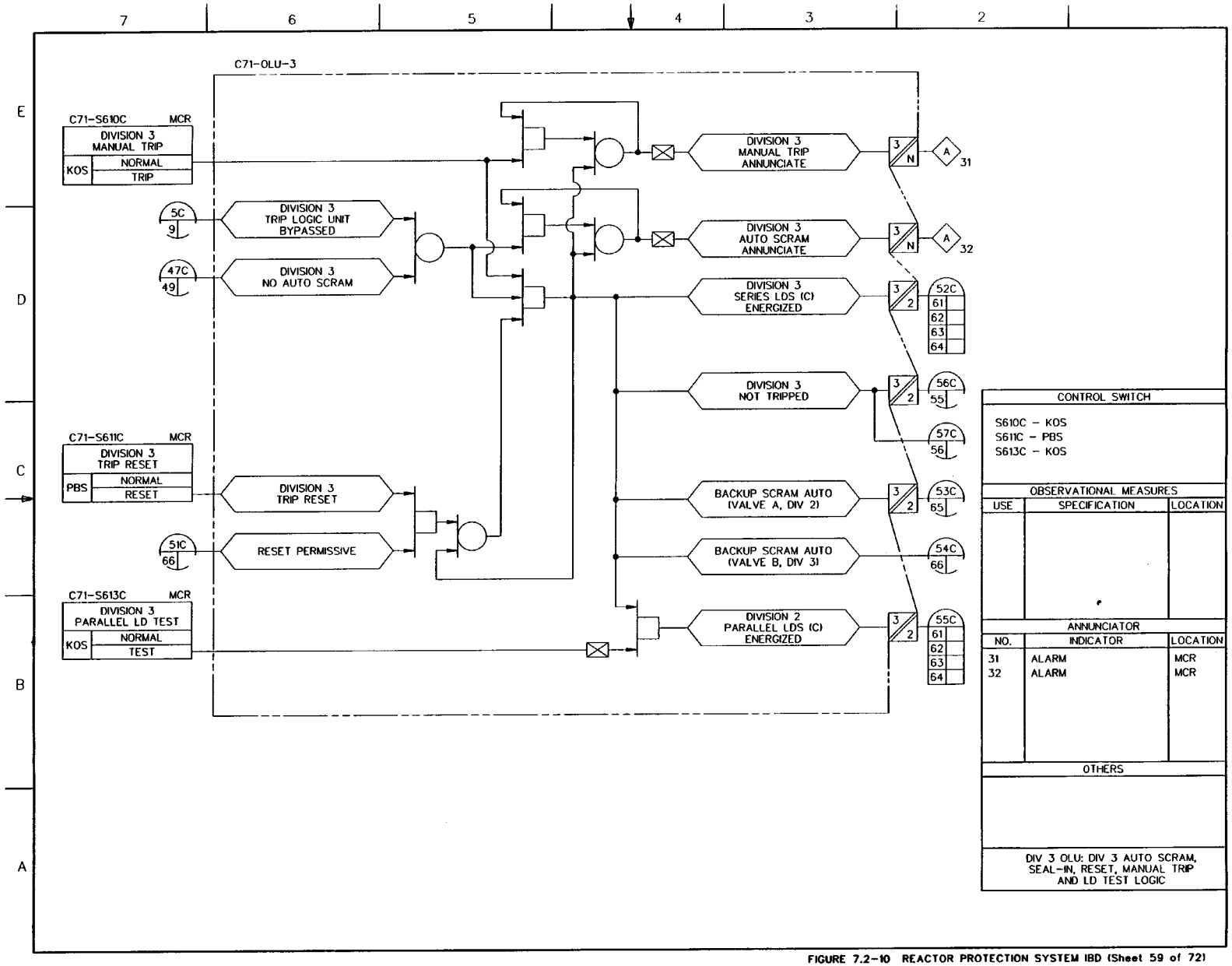

FIGURE 7.2-10 REACTOR PROTECTION SYSTEM IBD (Sheet 59 of 72)

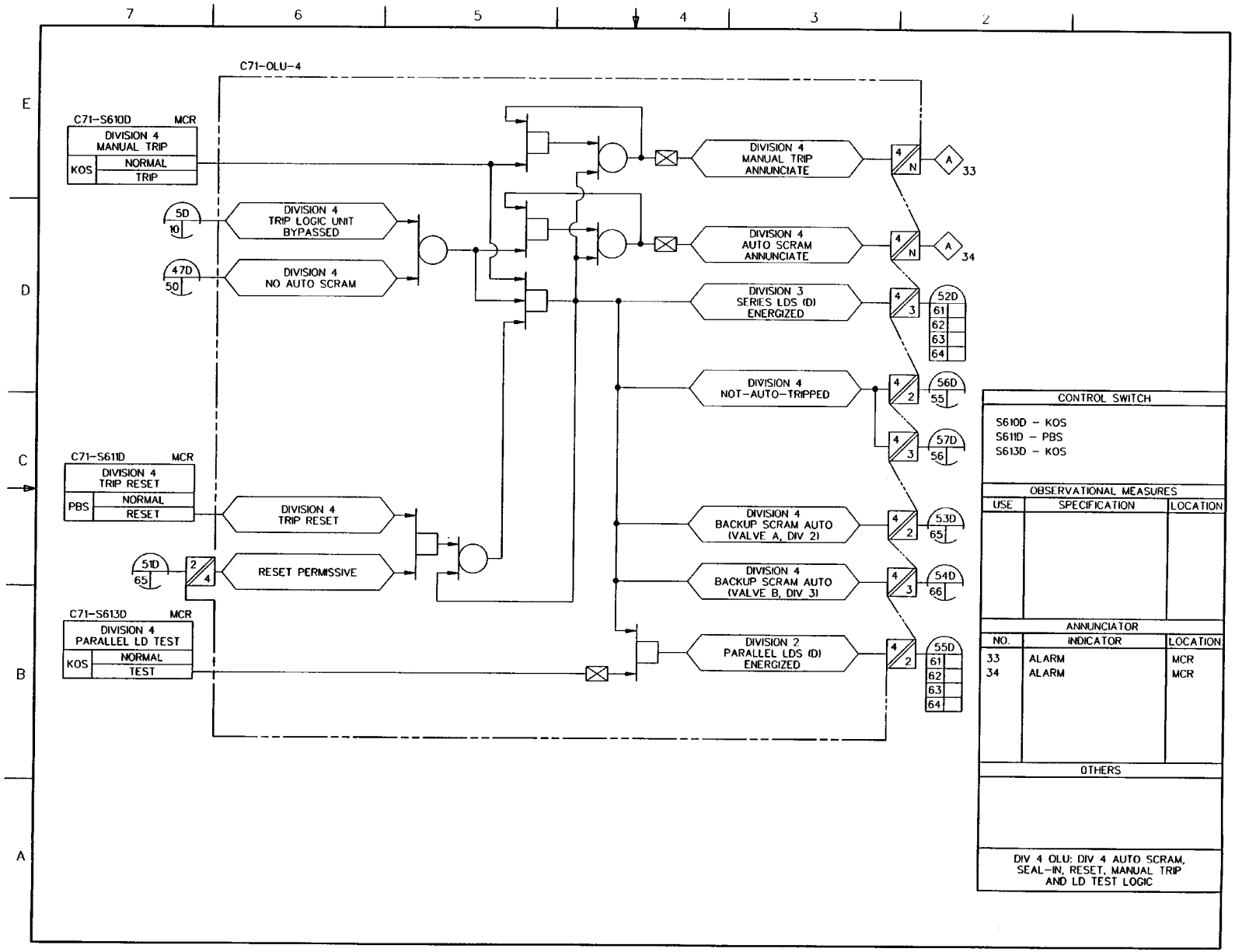

FIGURE 7.2-10 REACTOR PROTECTION SYSTEM IBD (Sheet 60 of 72)

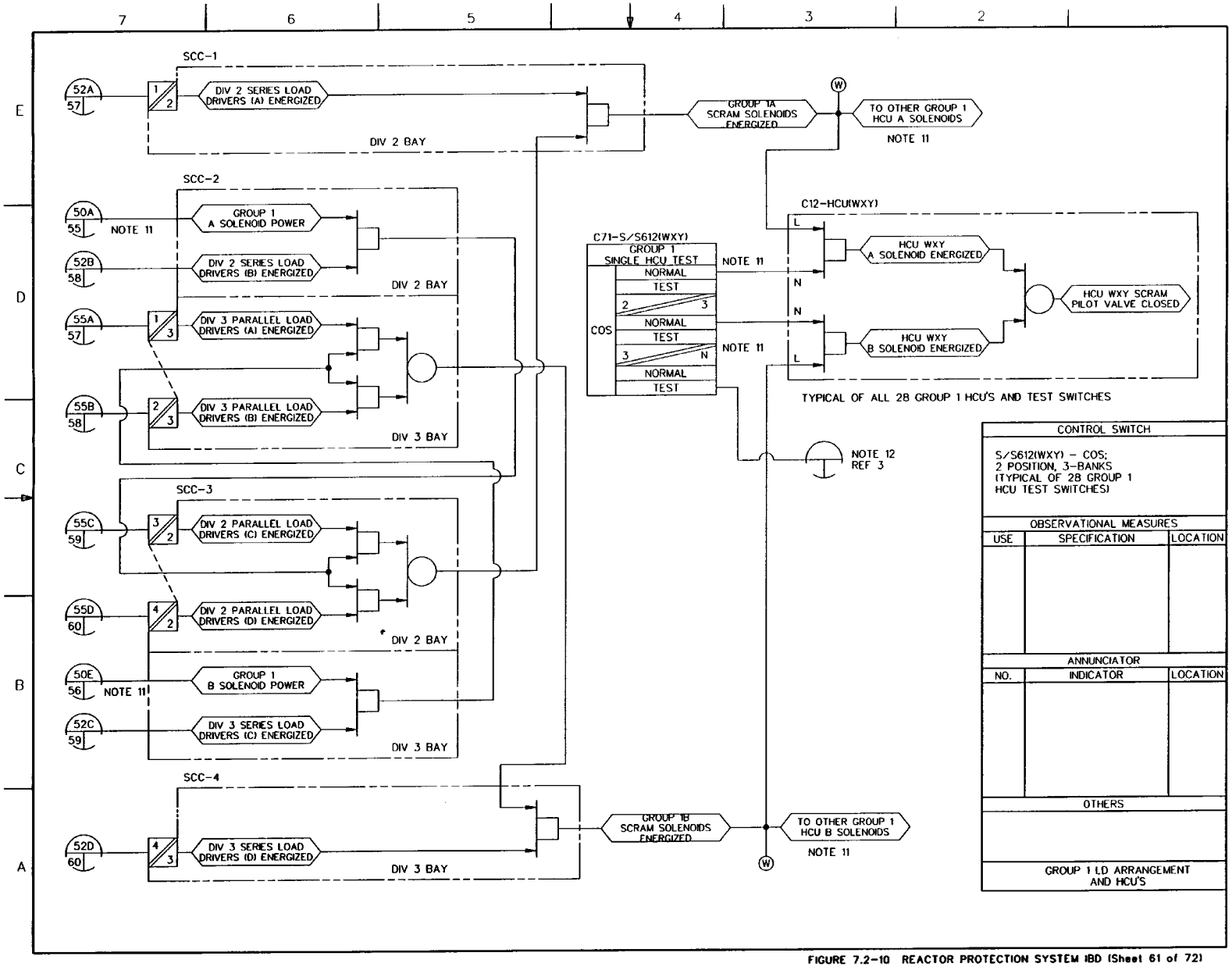

FIGURE 7.2-10 REACTOR PROTECTION SYSTEM IBD (Sheet 61 of 72)

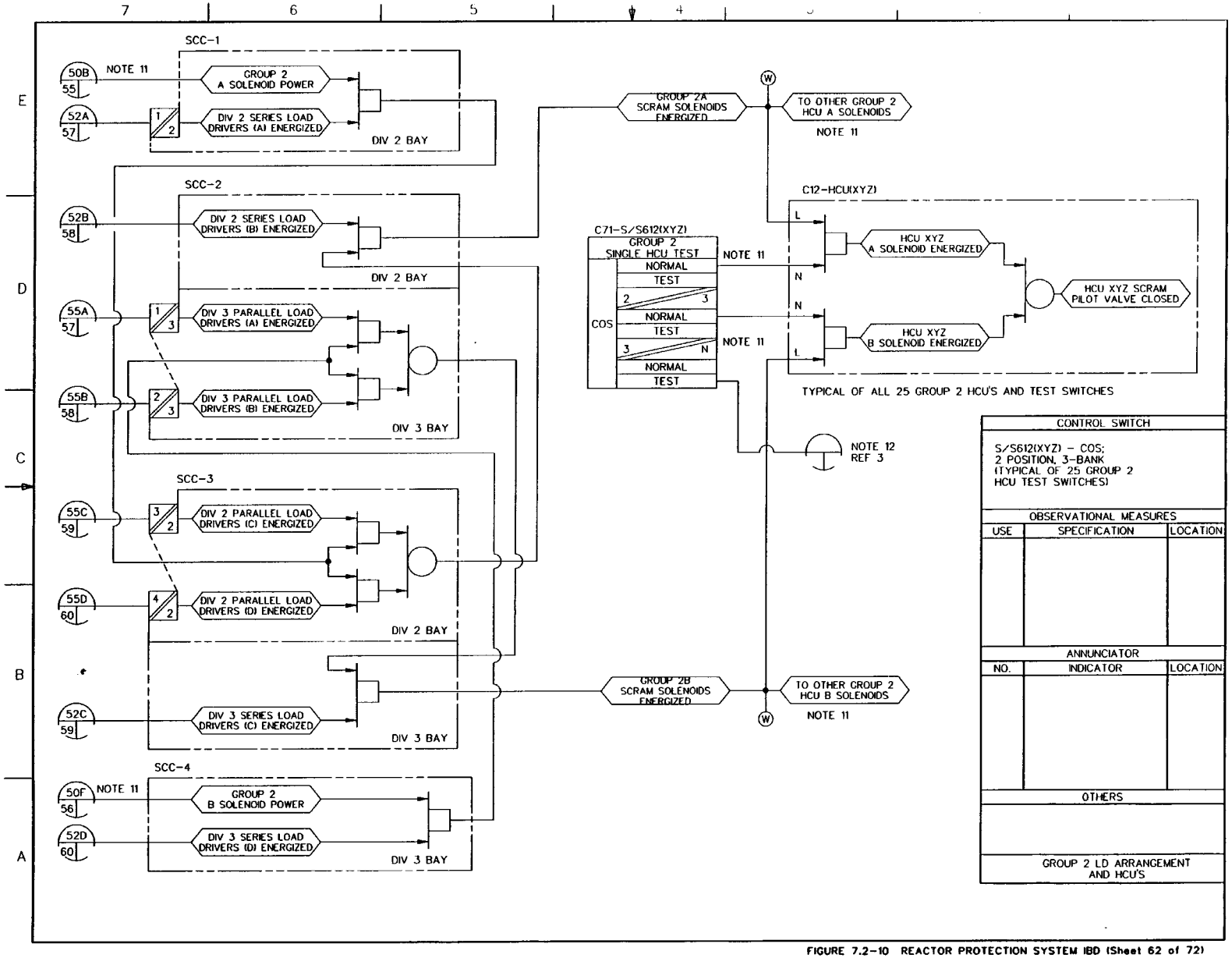

FIGURE 7.2-10 REACTOR PROTECTION SYSTEM IBD (Sheet 62 of 72)

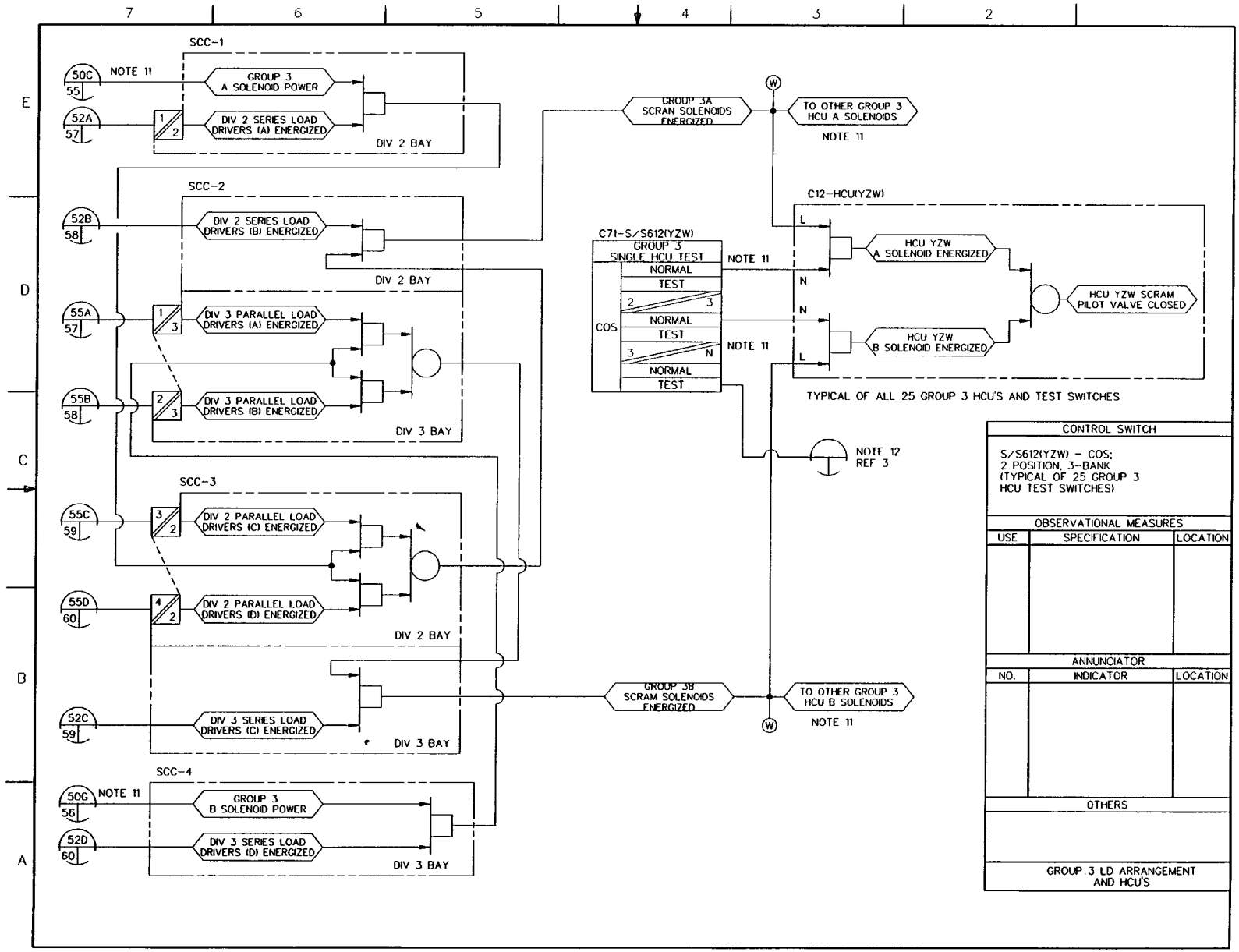

FIGURE 7.2-10 REACTOR PROTECTION SYSTEM IBD (Sheet 63 of 72)

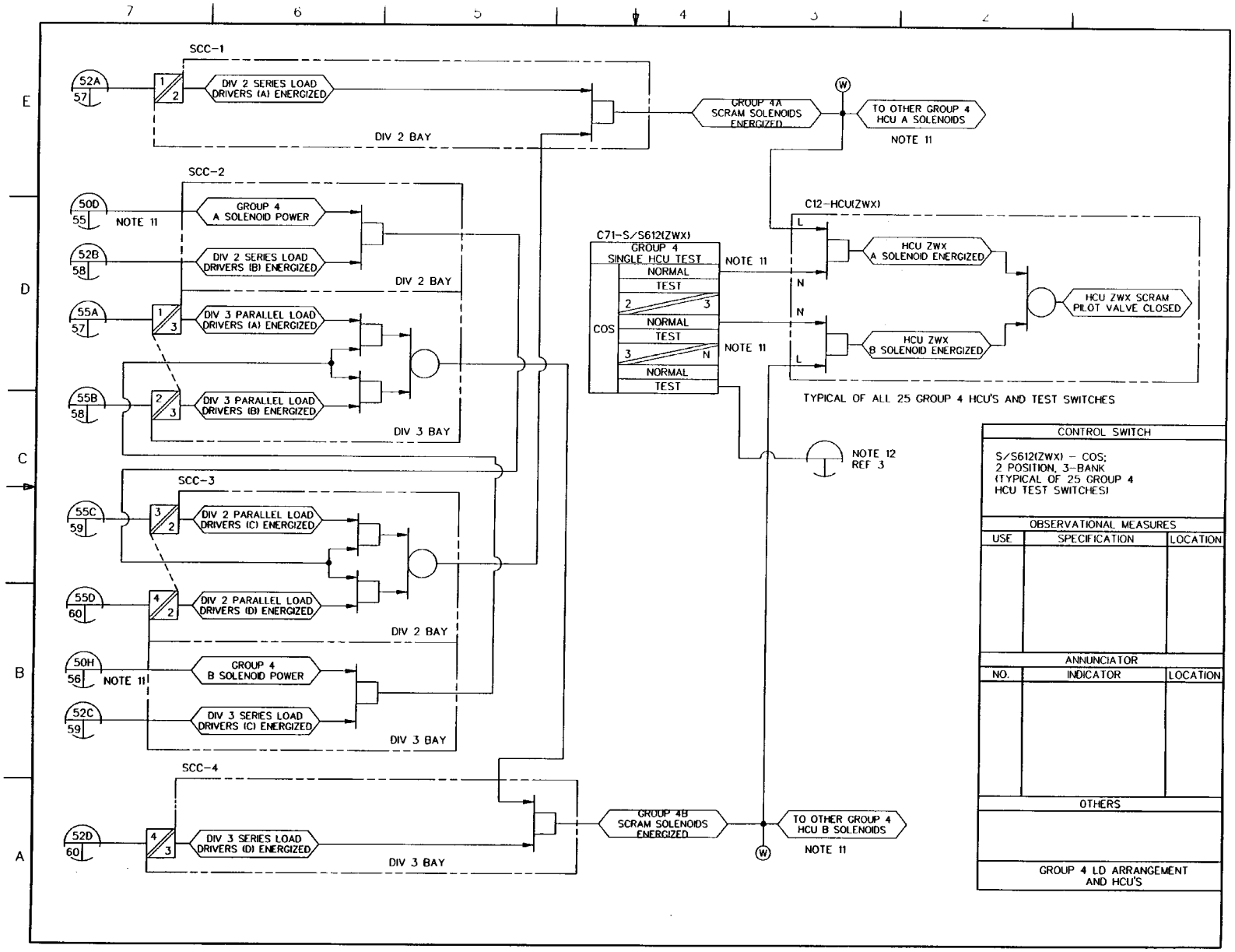

FIGURE 7.2-10 REACTOR PROTECTION SYSTEM IBD (Sheet 64 of 72)

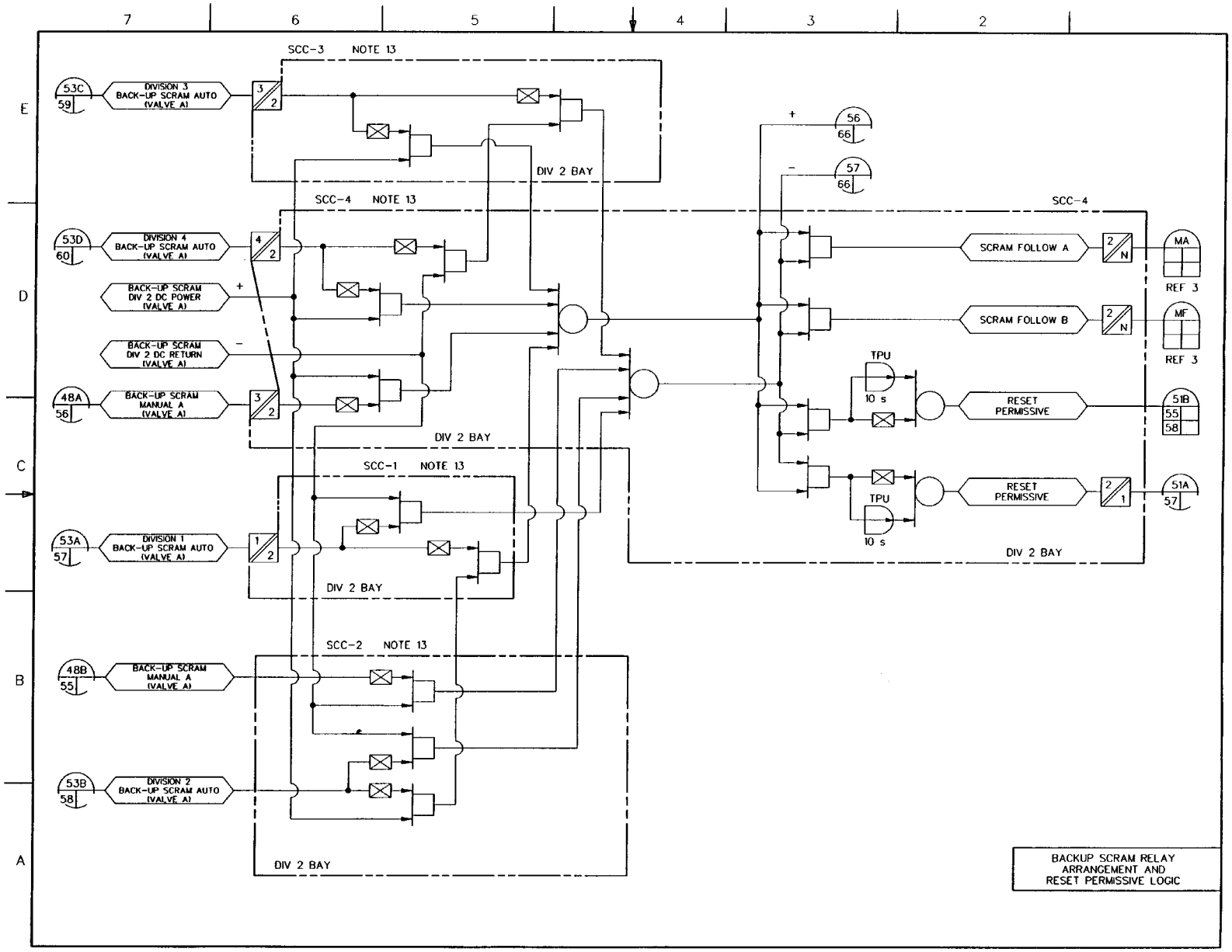

FIGURE 7.2-10 REACTOR PROTECTION SYSTEM IBD (Sheet 65 of 72)

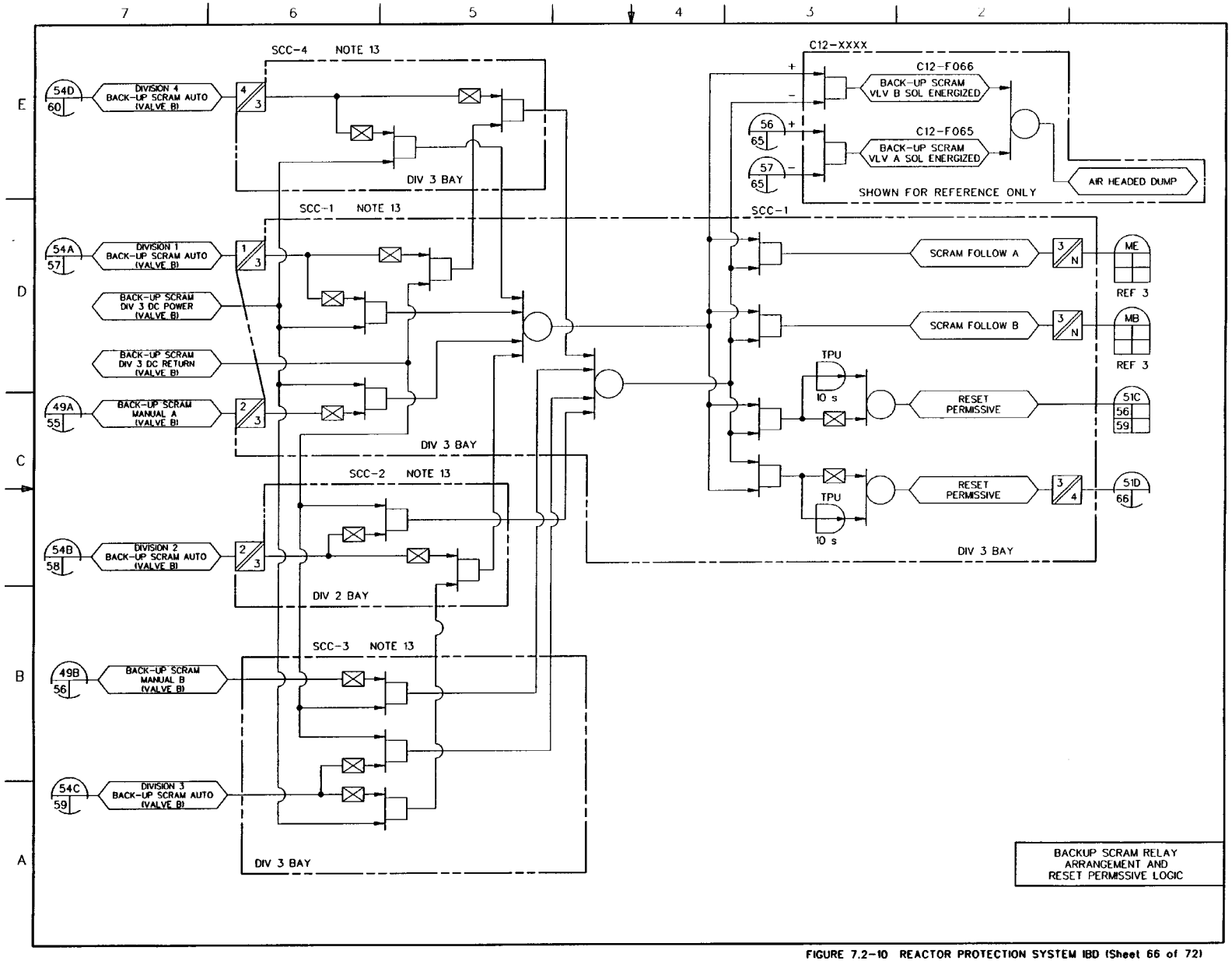

FIGURE 7.2-10 REACTOR PROTECTION SYSTEM IBD (Sheet 66 of 72)

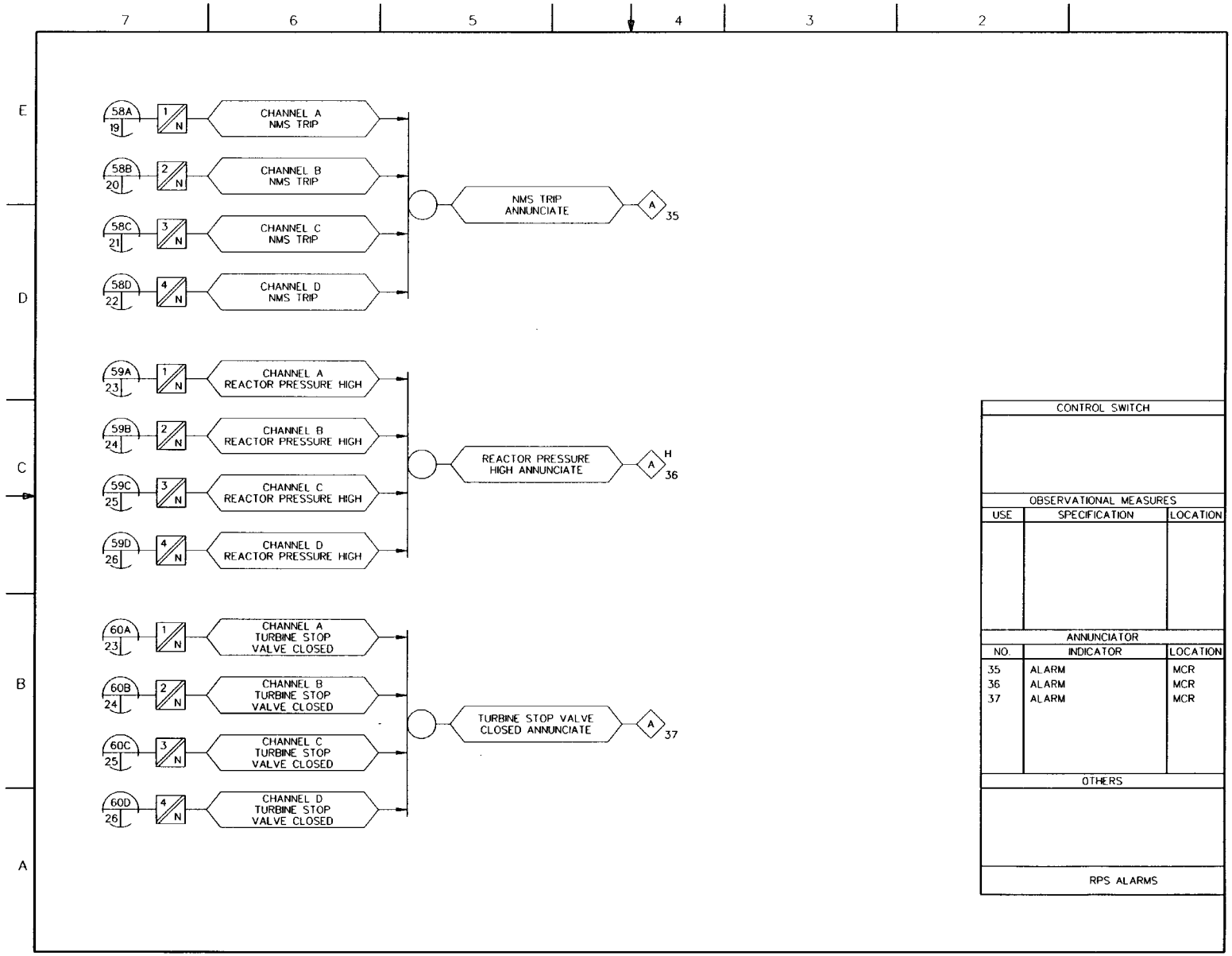

FIGURE 7.2-10 REACTOR PROTECTION SYSTEM IBD (Sheet 67 of 72)

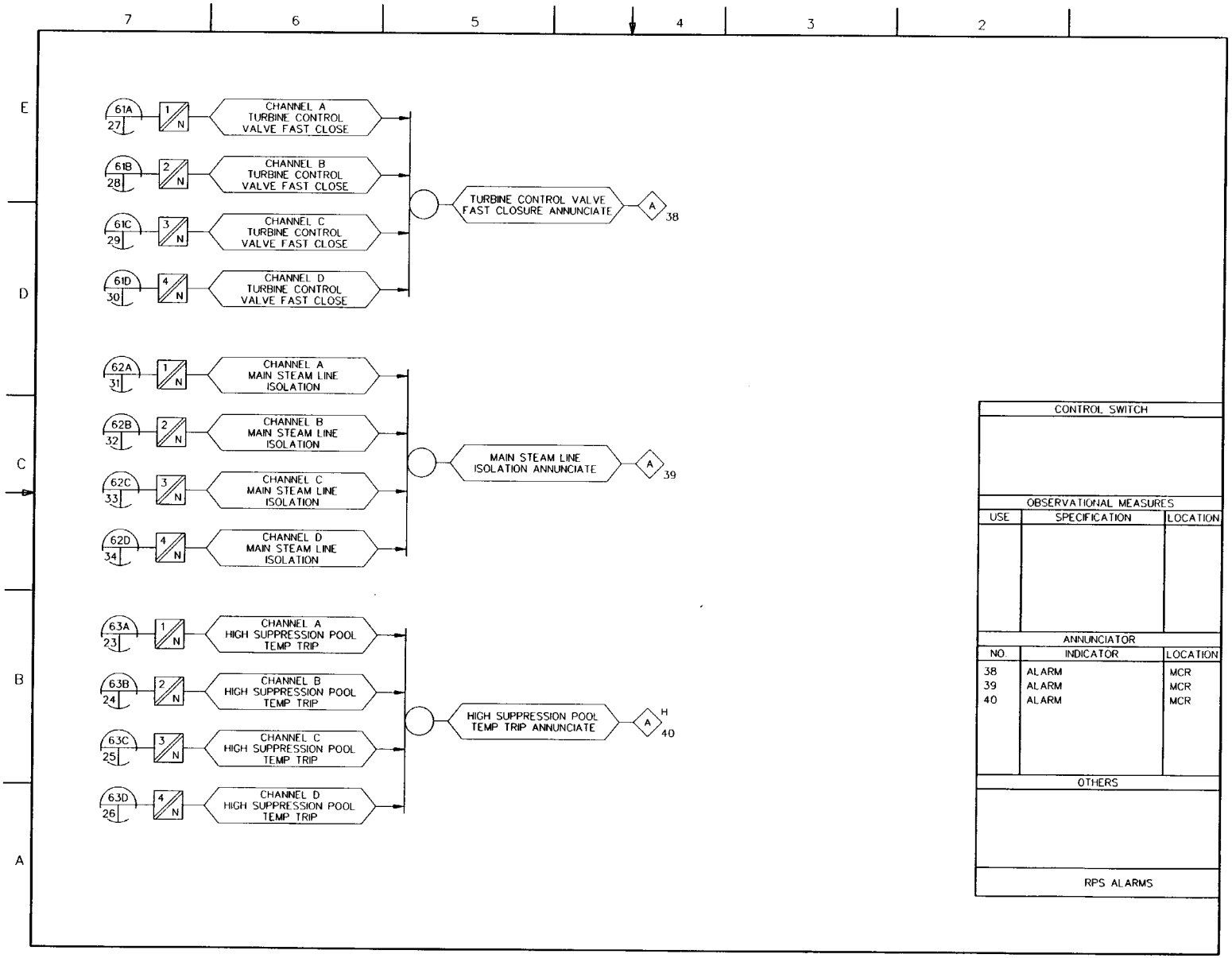

FIGURE 7.2-10 REACTOR PROTECTION SYSTEM IBD (Sheet 68 of 72)

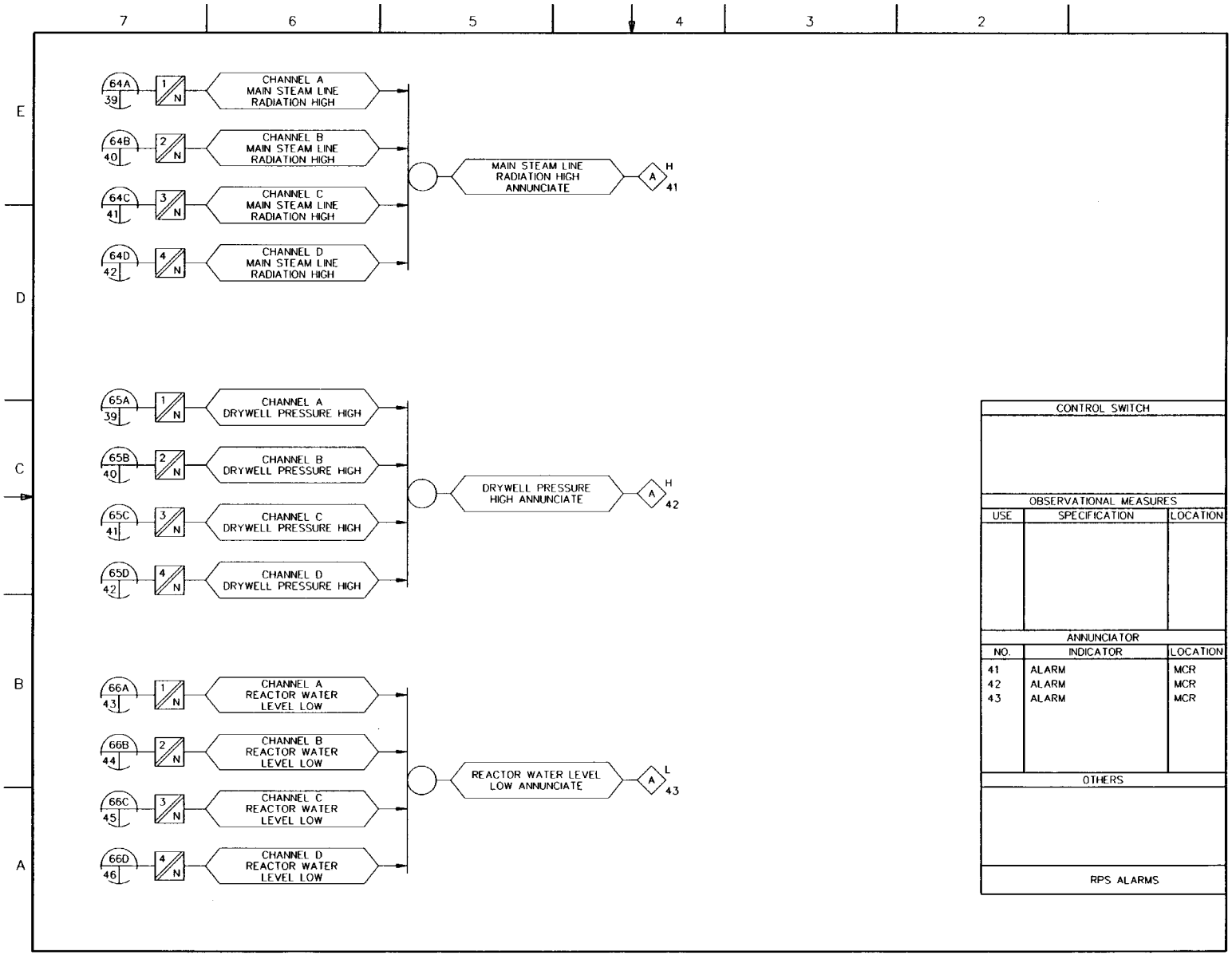

FIGURE 7.2-10 REACTOR PROTECTION SYSTEM IBD (Sheet 69 of 72)

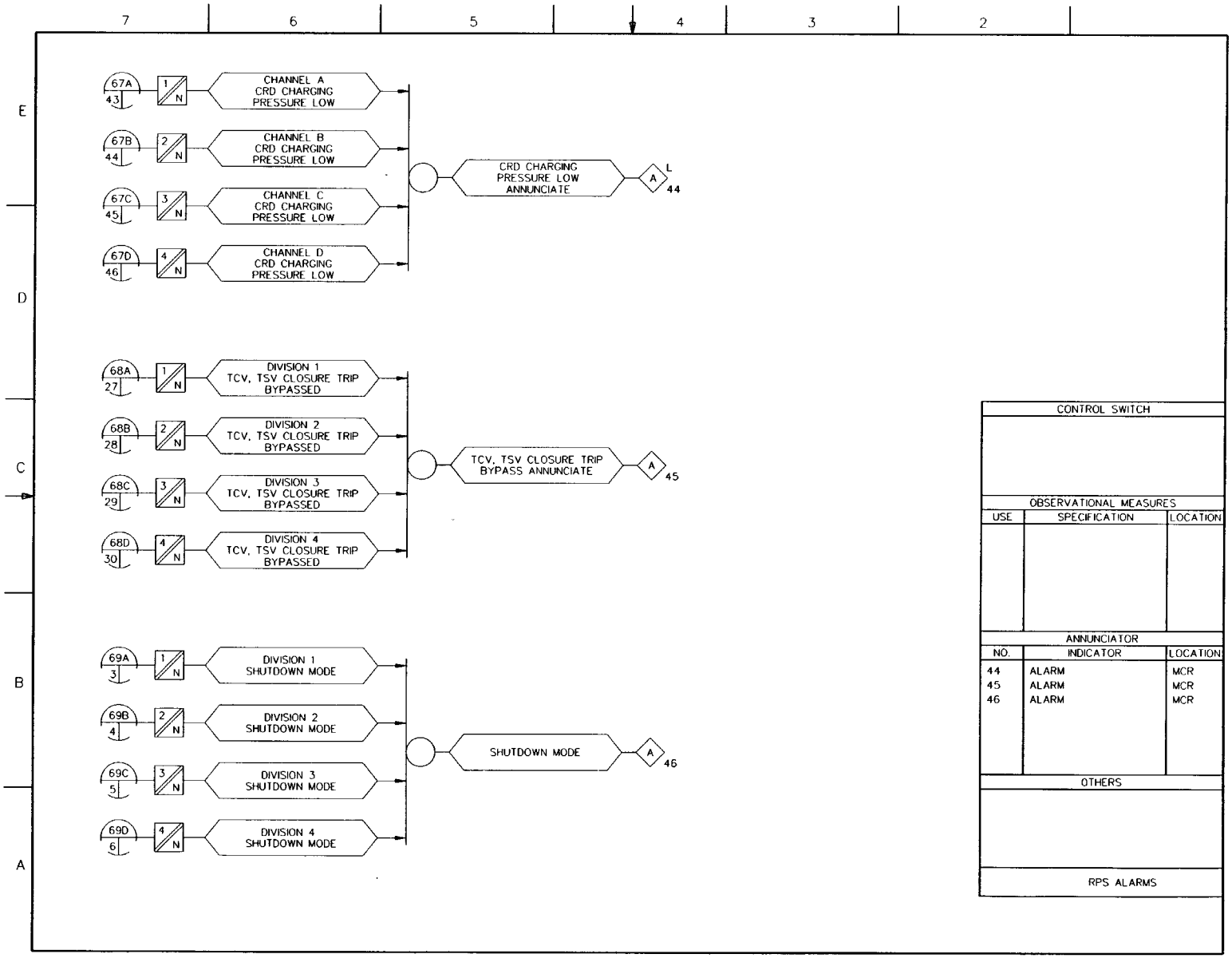

FIGURE 7.2-10 REACTOR PROTECTION SYSTEM IBD (Sheet 70 of 72)

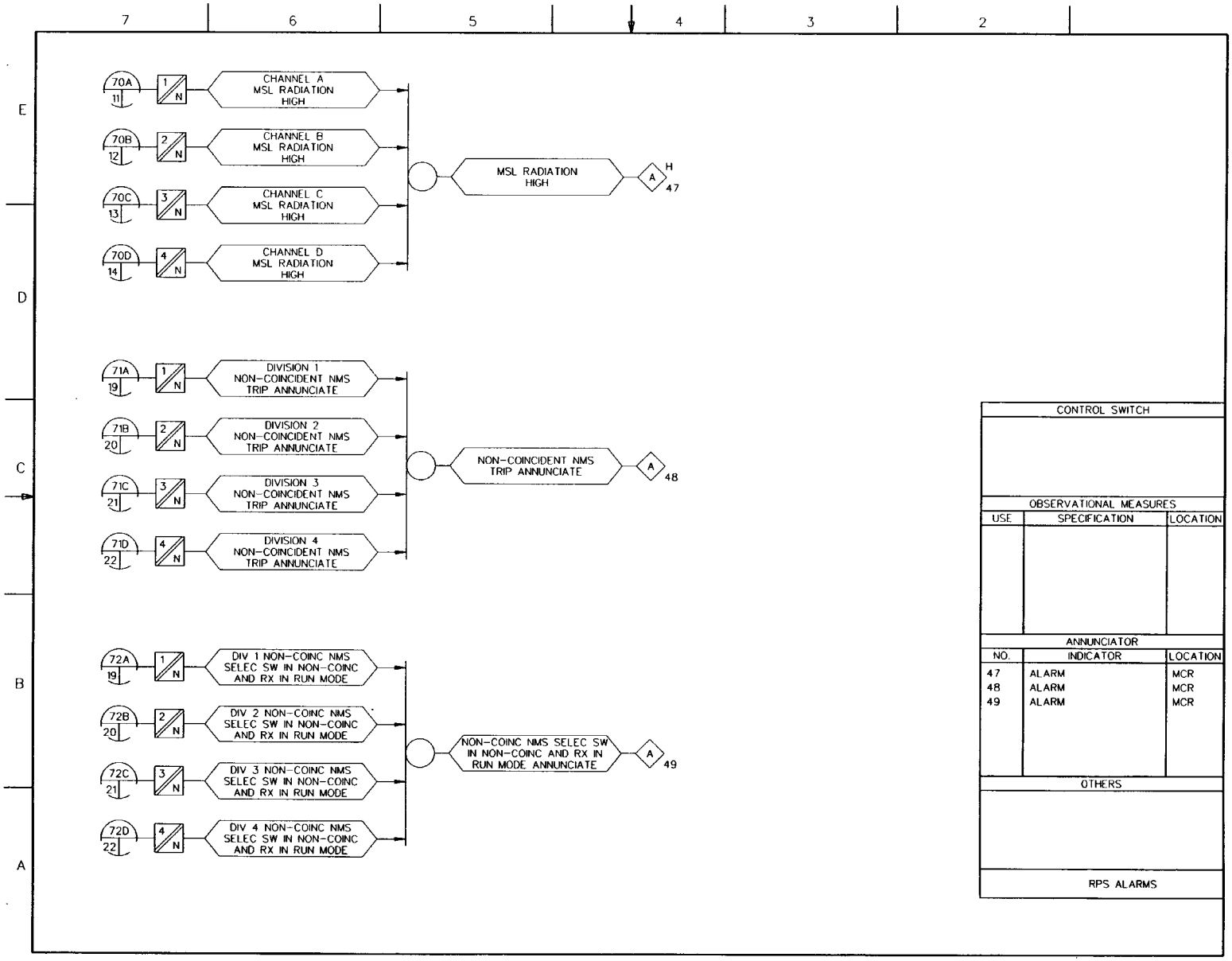

FIGURE 7.2-10 REACTOR PROTECTION SYSTEM IBD (Sheet 71 of 72)

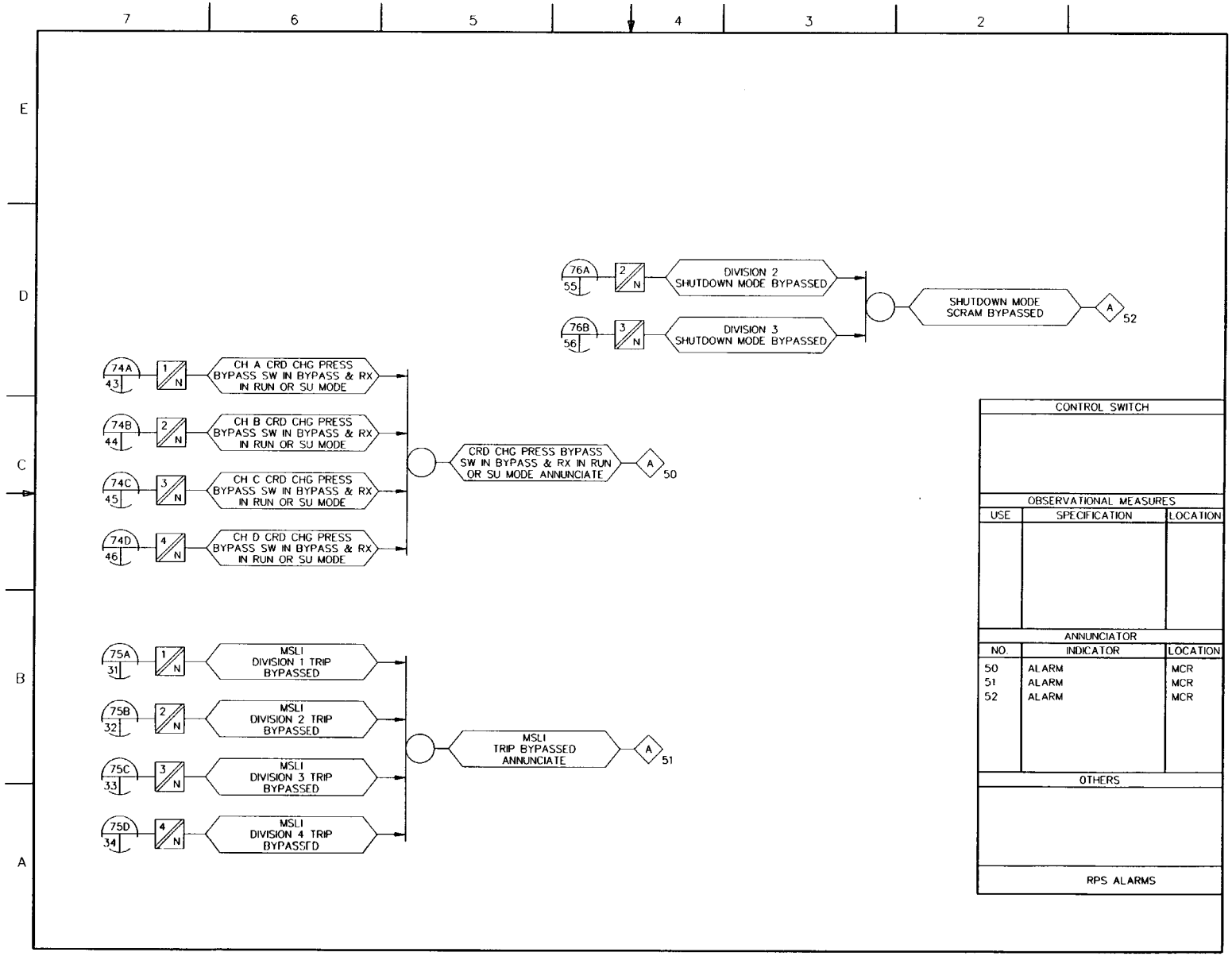

FIGURE 7.2-10 REACTOR PROTECTION SYSTEM IBD (Sheet 72 of 72)

NOTES:

1. ALL EQUIPMENT AND INSTRUMENTS FOR THIS SYSTEM ARE PREFIXED BY SYSTEM MPL NO. E22 UNLESS OTHERWISE NOTED.
2. DIVISIONAL SIGNALS SHALL BE ISOLATED FROM THE NON-1E ALARM.
3. SYSTEM R10, ELECTRICAL POWER DISTRIBUTION SYSTEM, SHALL PERMIT MOTOR TO START ONLY FOR PUMP VOLTAGE >70% NOMINAL.
4. THE LOGIC DESIGN SHALL INCORPORATE PROVISIONS TO REVERT 2/4 LOGIC TO 2/3 LOGIC DURING BYPASS OF A SINGLE DIVISION OF SENSORS. ALSO, THE LOGIC DESIGN SHALL NOT PERMIT THE BYPASS OF MORE THAN ONE DIVISION OF SENSORS AT A TIME.
5. SETPOINT VALUES ARE PRELIMINARY AND WILL BE FINALIZED IN DETAILED DESIGN.
6. THIS EQUIPMENT IS ALSO CONTROLLED BY THE REMOTE SHUTDOWN SYSTEM FOR HPCF LOOP "B" ONLY. SEE REF DOC-2 FOR DETAILED HPCF "B" AND RSS INTERFACES.
7. THE ELECTRICAL POWER DISTRIBUTION SYSTEM (REF DOC 6) SHALL PROVIDE PUMP STOP SIGNALS DUE TO BUS UNDERVOLTAGE (≤ 30% VOLTAGE) AND ANY OF THE FOLLOWING MOTOR PROTECTIVE RELAY TRIP SIGNALS:
   A. MOTOR UNDERCURRENT
   B. BUS DIFFERENTIAL CURRENT
   C. GROUND OVERCURRENT
8. UNLESS OTHERWISE SPECIFIED, POWER AND CONTROL CIRCUITS ARE DIVISIONS 2 AND 3 FOR LOOP B AND C RESPECTIVETLY.

TABLE OF CONTENTS

SH NO.	TITLE
1	COVER, TABLE OF CONTENTS, NOTES AND REFERENCES
2	ANNUNCIATORS/ALARM LIGHTS
3	HPCF LOOPS B & C INITIATION LOGIC
4	HPCF LOOPS B & C INITIATION LOGIC (CONTINUED)
5	HPCF LOOP C INITIATION LOGIC
6	TESTABLE CHECK VALVE F004B & C AND EQUALIZING VALVE F019B & C
7	HPCF PUMP C001C
8	HPCF PUMP C001C (CONTINUED)
9	INJECTION VALVE F003B & C
10	INJECTION VALVE F003C (CONTINUED)
11	CONDENSATE STORAGE TANK SUCTION VALVE F001B & C
12	SUPPRESSION POOL SUCTION VALVE F006B
13	SUPPRESSION POOL SUCTIION VALVE F006C
14	MINIMUM FLOW VALVE F010B
14	TEST RETURN VALVE (THROTTLEABLE) F008B & C
14	TEST BYPASS VALVE (THROTTLEABLE) F009B & C
15	MINIMUM FLOW VALVE F010C
16	HPCF LOOP B THERMAL RELAY BYPASS LOGIC AND EQUIPMENT LIST
17	HPCF LOOP C THERMAL RELAY BYPASS LOGIC

REFERENCE DOCUMENTS:

	MPL NO.
1. NUCLEAR BOILER SYSTEM P&ID	B21-1010
2. REMOTE SHUTDOWN SYSTEM IBD	C61-1030
3. HPCF SYSTEM P&ID	E22-1010
4. NUCLEAR BOILER SYSTEM IBD	B21-1030
5. REMOTE SHUTDOWN SYSTEM IBD	C61-1030
6. ELECTRICAL POWER DISTRIBUTION SYSTEM	R10-1030
7. INTERLOCK BLOCK DIAGRAM (IBD) STANDARDS	A10-3070

FIGURE 7.3-1 HIGH PRESSURE CORE FLOODER SYSTEM IBD (Sheet 1 of 17)

TABLE 1: ANNUNCIATORS/ALARM LIGHTS

INDICATION	FUNCTION	SOURCE OF SIGNAL
ALARM	LOW REACTOR WATER LEVEL 1.5	LOGIC OUTPUT
ALARM	HIGH DRYWELL PRESSURE	LOGIC OUTPUT
ALARM	HPCF PUMP MOTOR OVERLOAD LOOP B	M/C HPCF PUMP B POWER FAILURE
ALARM	HPCF PUMP MOTOR OVERLOAD LOOP C	M/C HPCF PUMP C POWER FAILURE
ALARM	OVERLOAD ANY HPCF VLV MOTOR LOOP B	MOTOR CONTROL CENTER
ALARM	OVERLOAD ANY HPCF VLV MOTOR LOOP C	MOTOR CONTROL CENTER
ALARM	HPCF LOOP B MANUAL INITIATION ARMED	PBS
ALARM	HPCF LOOP C MANUAL INITIATION ARMED	PBS
ALARM	HIGH REACTOR WATER LEVEL 8	LOGIC OUTPUT
ALARM	HPCF LOOP B INITIATED	LOGIC OUTPUT
ALARM	HPCF LOOP C AUTO INITIATION	LOGIC OUTPUT
ALARM	HPCF LOOP B OUT OF SERVICE	LOGIC OUTPUT, COS
ALARM	HPCF LOOP C OUT OF SERVICE	LOGIC OUTPUT, COS
ALARM	HPCF PUMP B LOW-LOW SUCTION PRESSURE	PSZ603B
ALARM	HPCF PUMP C LOW-LOW SUCTION PRESSURE	PSZ603C (MULTIPLEX)
ALARM	HPCF PUMP B DISCHARGE LINE NOT FILLED	PSZ602B-2
ALARM	HPCF PUMP B HIGH SUCTION PRESSURE	PSZ602B-1
ALARM	HPCF PUMP C DISCHARGE LINE NOT FILLED	PSZ602C-2
ALARM	HPCF PUMP C HIGH SUCTION PRESSURE	PSZ602C-1
WHITE LIGHT	HPCF PUMP B MANUAL OVERRIDE	LOGIC OUTPUT, CS
WHTE LIGHT	HPCF PUMP C MANUAL OVERRIDE OF AUTO INITIATION	LOGIC OUTPUT, CS
WHITE LIGHT	HPCF INJECTION VALVE F003B MANUAL OVERRIDE	LOGIC OUTPUT, CS
WHITE LIGHT	HPCF INJECTION VALVE F003C MANUAL OVERRIDE OF AUTO INITIATION	LOGIC OUTPUT, CS
WHITE LIGHT	HPCF LOOP B INITIATION SEALED-IN	LOGIC OUTPUT
WHITE LIGHT	HPCF LOOP C AUTO INITIATION SEALED-IN	LOGIC OUTPUT
ALARM	HPCF C MANUAL INITIATION	PBS
ALARM	HPCF C PUMP C LOW-LOW SUCTION PRESSURE	PS603C (HARDWIRED)
WHITE LIGHT	HPCF C MANUAL INITIATION SEALED-IN	LOGIC OUTPUT
WHITE LIGHT	HPCF C INJECTION VALVE F003C MANUAL OVERRIDE OF MANUAL INITIATION	LOGIC OUTPUT, CS

TABLE 1: ANNUNCIATORS/ALARM LIGHTS (CONT'D)

INDICATION	FUNCTION	SOURCE OF SIGNAL
ALARM	HPCF LOOP B LOW CST WATER LEVEL	LOGIC OUTPUT
ALARM	HPCF LOOP B HIGH SUPPR POOL WATER LEVEL	LOGIC OUTPUT
ALARM	HPCF LOOP C LOW CST WATER LEVEL	LOGIC OUTPUT
ALARM	HPCF LOOP C HIGH SUPPR POOL WATER LEVEL	LOGIC OUTPUT
WHITE LIGHT	HPCF LOOP B HIGH REACTOR WATER LEVEL 8 SEALED-IN	LOGIC OUTPUT
WHITE LIGHT	HPCF LOOP C HIGH REACTOR WATER LEVEL 8 SEALED-IN	LOGIC OUTPUT
ALARM	HPCF LOOP B PUMP CONTROL SW IN PULL LOCK	PULL LOCK
ALARM	HPCF LOOP C PUMP CONTROL SW IN PULL LOCK	PULL LOCK
ALARM	HPCF LOOP B LOSS OF LOGIC POWER SOURCE	LOGIC OUTPUT
ALARM	HPCF LOOP C LOSS OF LOGIC POWER SOURCE	LOGIC OUTPUT
ALARM	HPCF LOOP B TESTING	CS
ALARM	HPCF LOOP C TESTING	CS
ALARM	HPCF PUMP B TRIP	LOGIC OUTPUT
ALARM	HPCF PUMP C TRIP	LOGIC OUTPUT
ALARM	EMERGENCY CONTAINMENT FLOODING -CST/SP SUCTION TRANSFER OVERRIDE LOOP B	KOS
ALARM	EMERGENCY CONTAINMENT FLOODING-CST/SP SUCTION TRANSFER OVERRIDE LOOP C	KOS
ALARM	MCC EQUIPMENT IN TEST MODE (THERMAL RELAY NOT BYPASSED) FOR LOOP B	KOS
ALARM	MCC EQUIPMENT IN TEST MODE (THERMAL RELAY NOT BYPASSED) FOR LOOP C	KOS
ALARM	HPCF LOOP B FLOW LOW	FIS-Z608B, PS-Z607B
ALARM	HPCF LOOP C FLOW LOW	FIS-Z608C, PS-Z607C

FIGURE 7.3-1 HIGH PRESSURE CORE FLOODER SYSTEM I&D (Sheet 2 of 17)

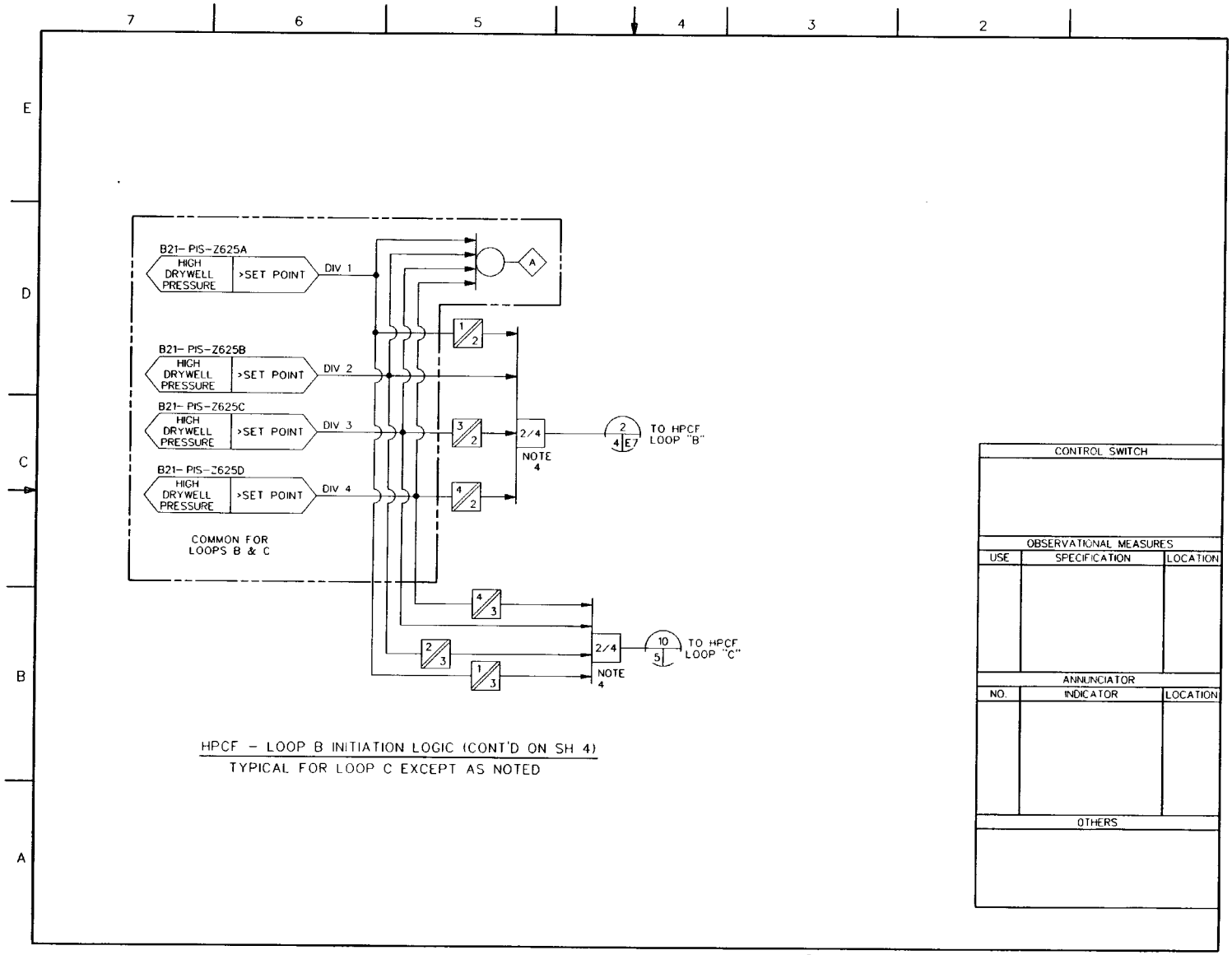

HPCF – LOOP B INITIATION LOGIC (CONT'D ON SH 4)
TYPICAL FOR LOOP C EXCEPT AS NOTED

FIGURE 7.3-1 HIGH PRESSURE CORE FLOODER SYSTEM I&D (Sheet 3 of 17)

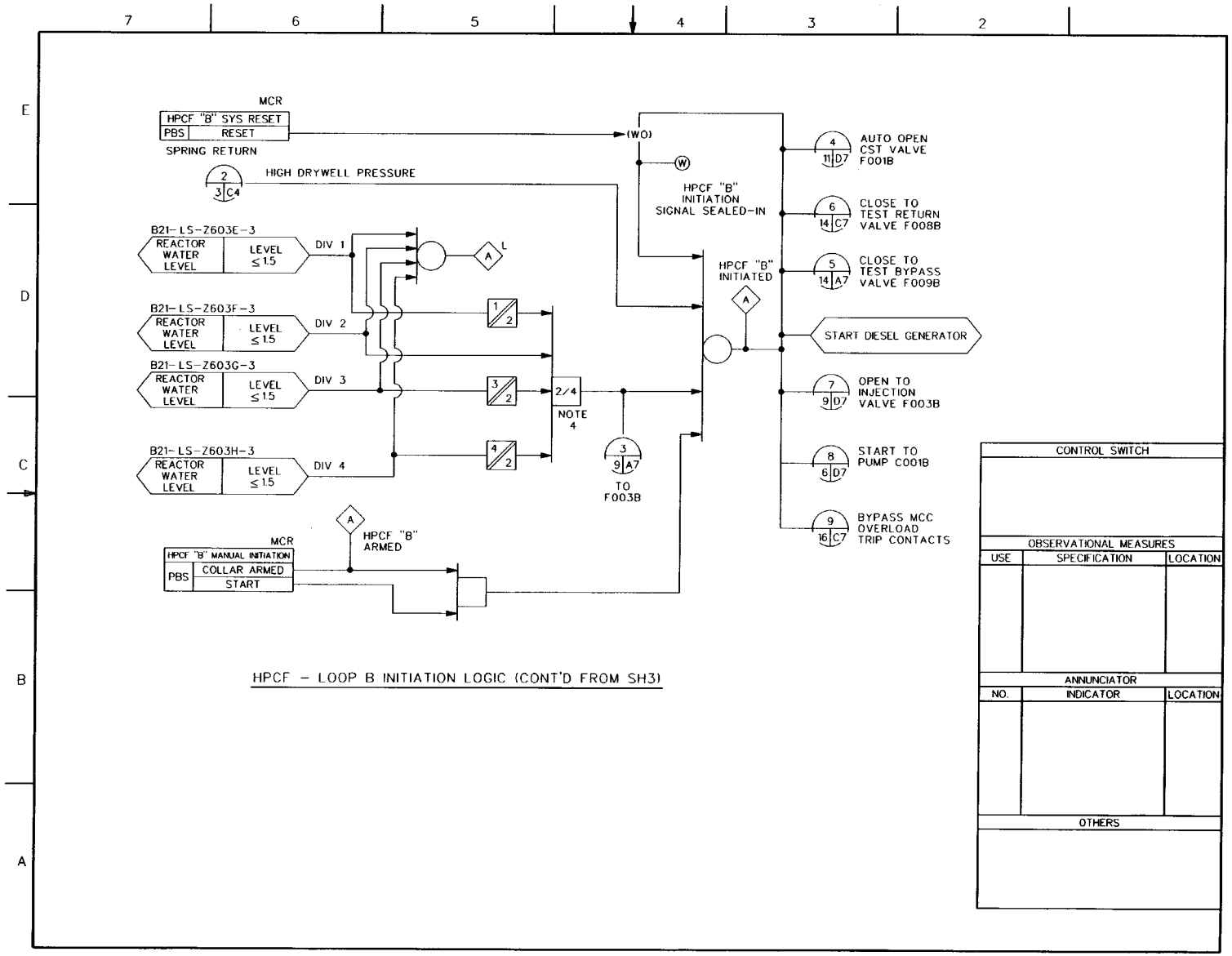

HPCF – LOOP B INITIATION LOGIC (CONT'D FROM SH3)

FIGURE 7.3-1 HIGH PRESSURE CORE FLOODER SYSTEM IBD (Sheet 4 of 17)

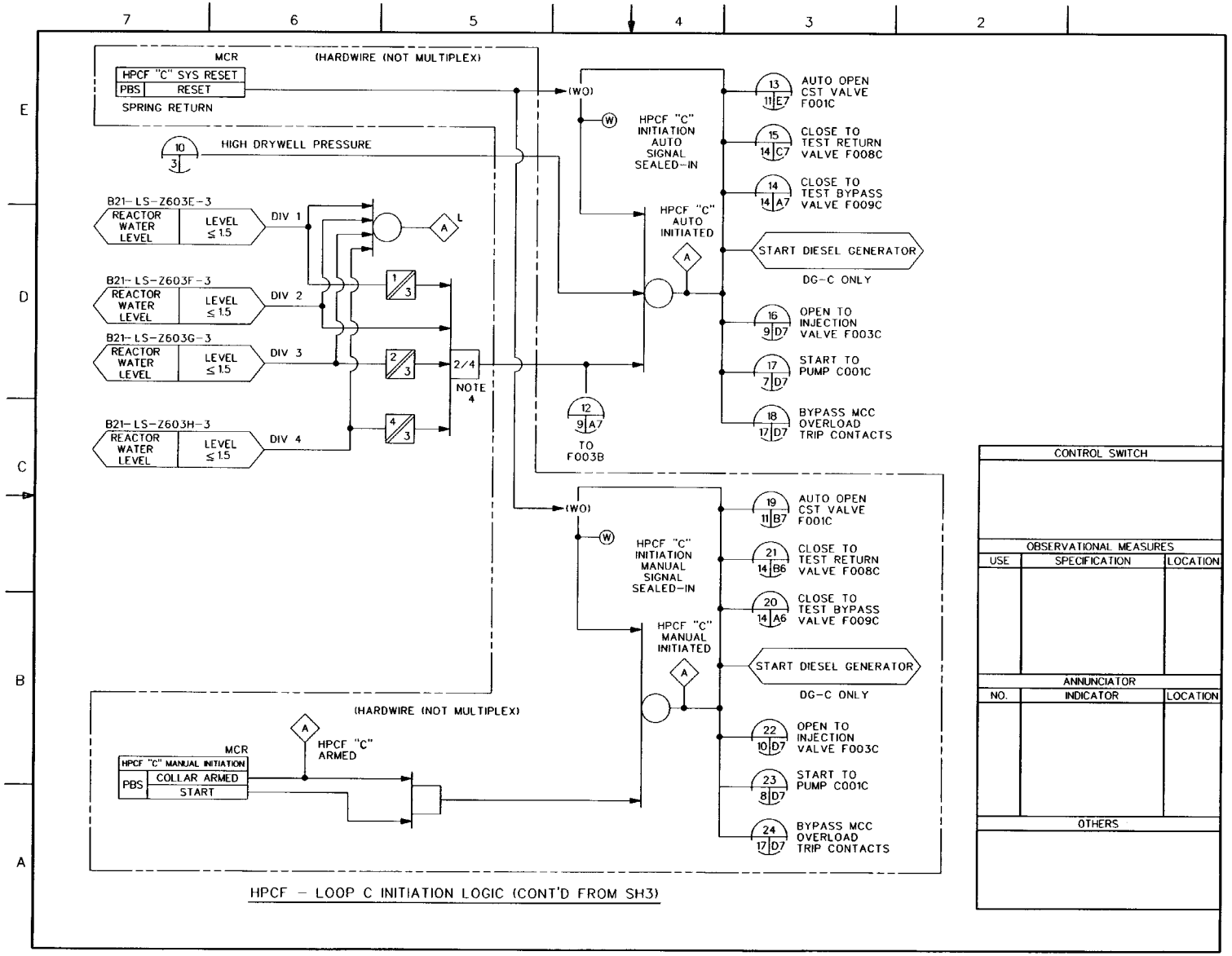

HPCF – LOOP C INITIATION LOGIC (CONT'D FROM SH3)

FIGURE 7.3-1 HIGH PRESSURE CORE FLOODER SYSTEM I&D (Sheet 5 of 17)

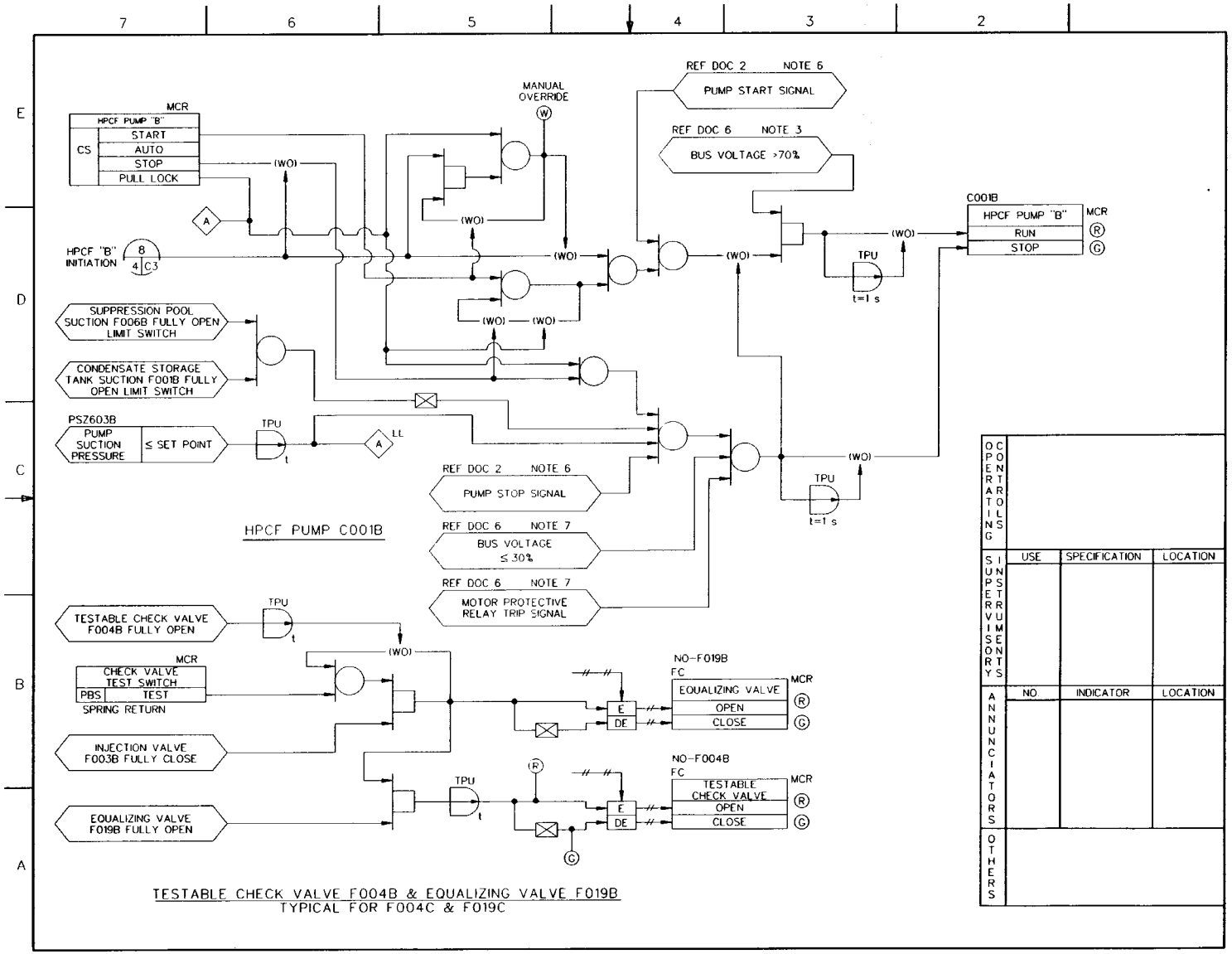

FIGURE 7.3-1 HIGH PRESSURE CORE FLOODER SYSTEM IBD (Sheet 6 of 17)

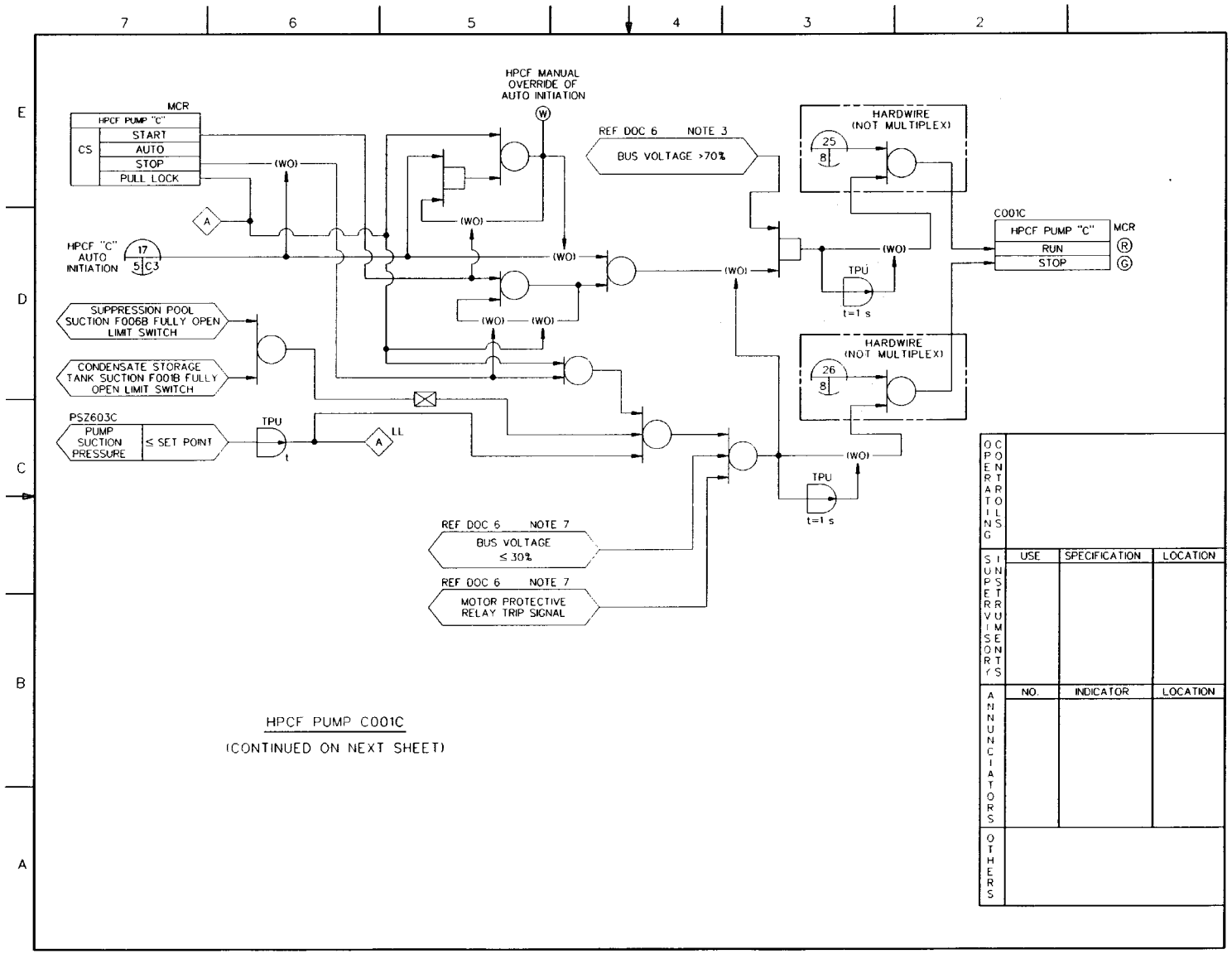

FIGURE 7.3-1 HIGH PRESSURE CORE FLOODER SYSTEM I&D (Sheet 7 of 17)

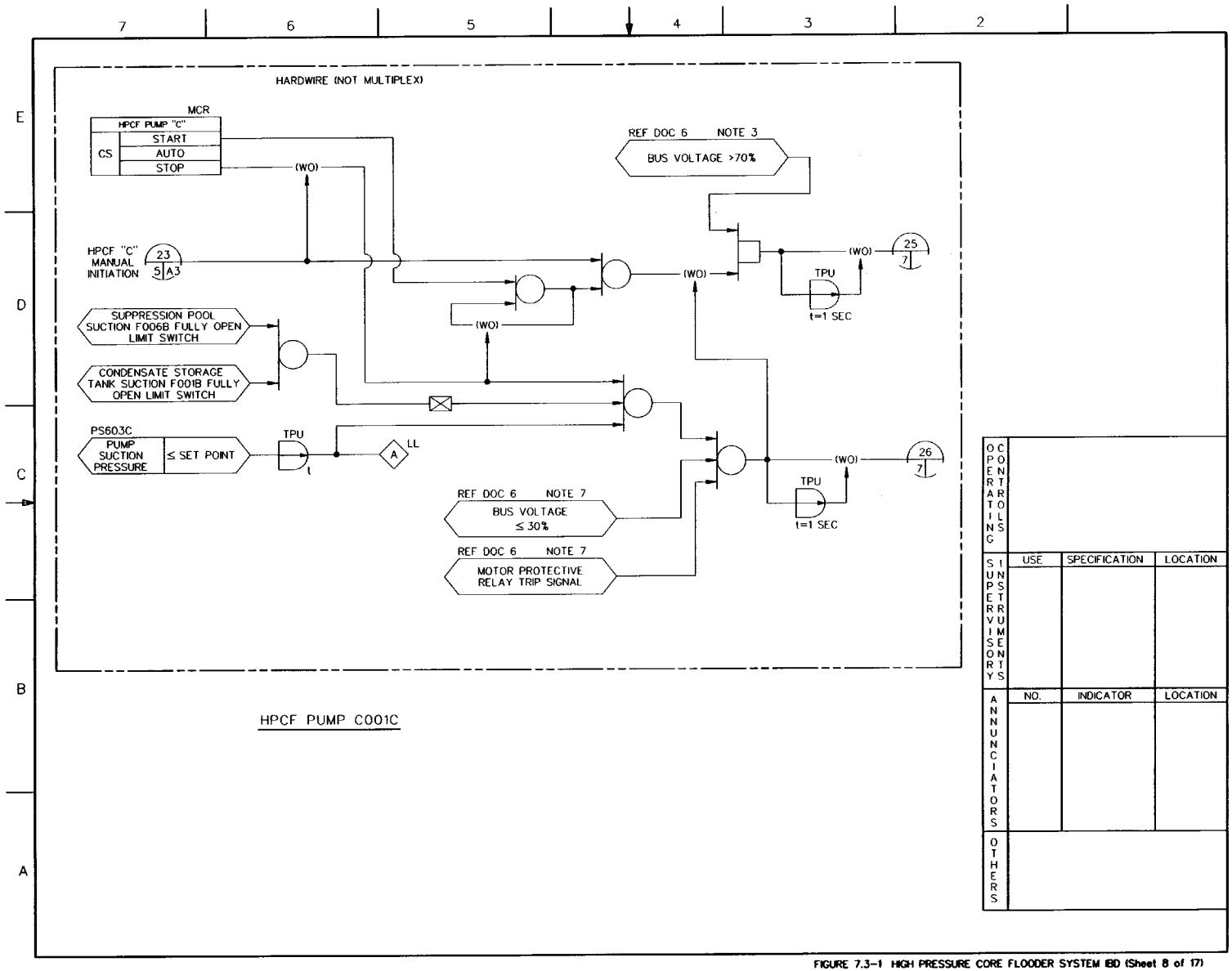

HPCF PUMP C001C

FIGURE 7.3-1 HIGH PRESSURE CORE FLOODER SYSTEM I&D (Sheet 8 of 17)

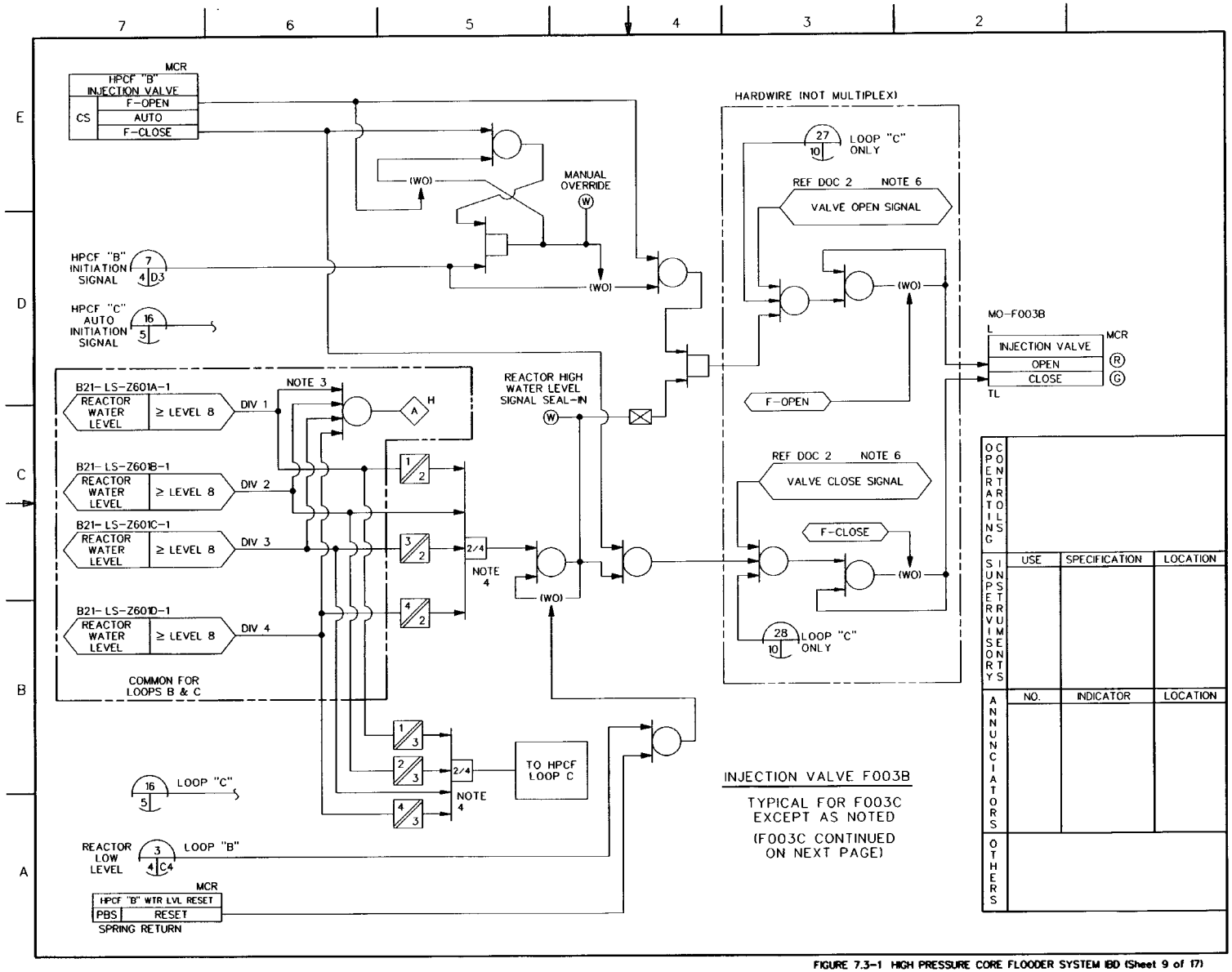

FIGURE 7.3-1 HIGH PRESSURE CORE FLOODER SYSTEM IBD (Sheet 9 of 17)

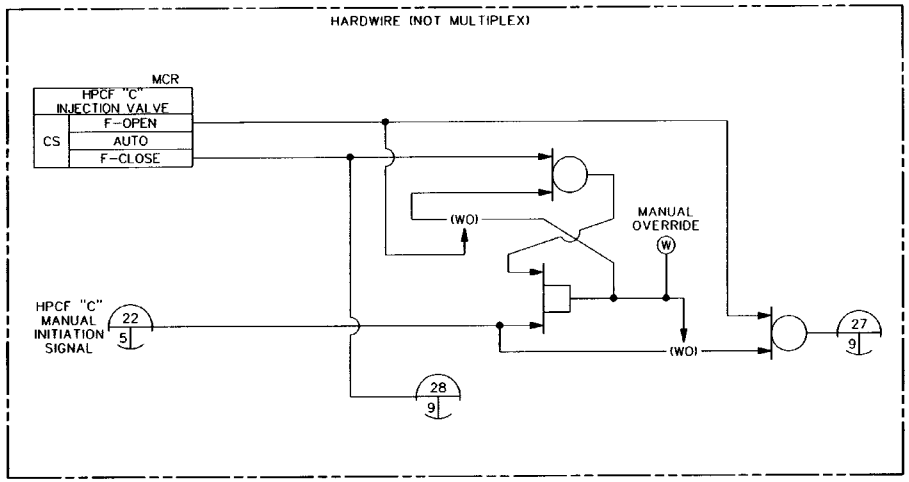

INJECTION VALVE F003C

OPERATING CONTROLS			
SUPERVISORY INSTRUMENTS	USE	SPECIFICATION	LOCATION
ANNUNCIATORS	NO.	INDICATOR	LOCATION
OTHERS			

FIGURE 7.3-1 HIGH PRESSURE CORE FLOODER SYSTEM I&D (Sheet 10 of 17)

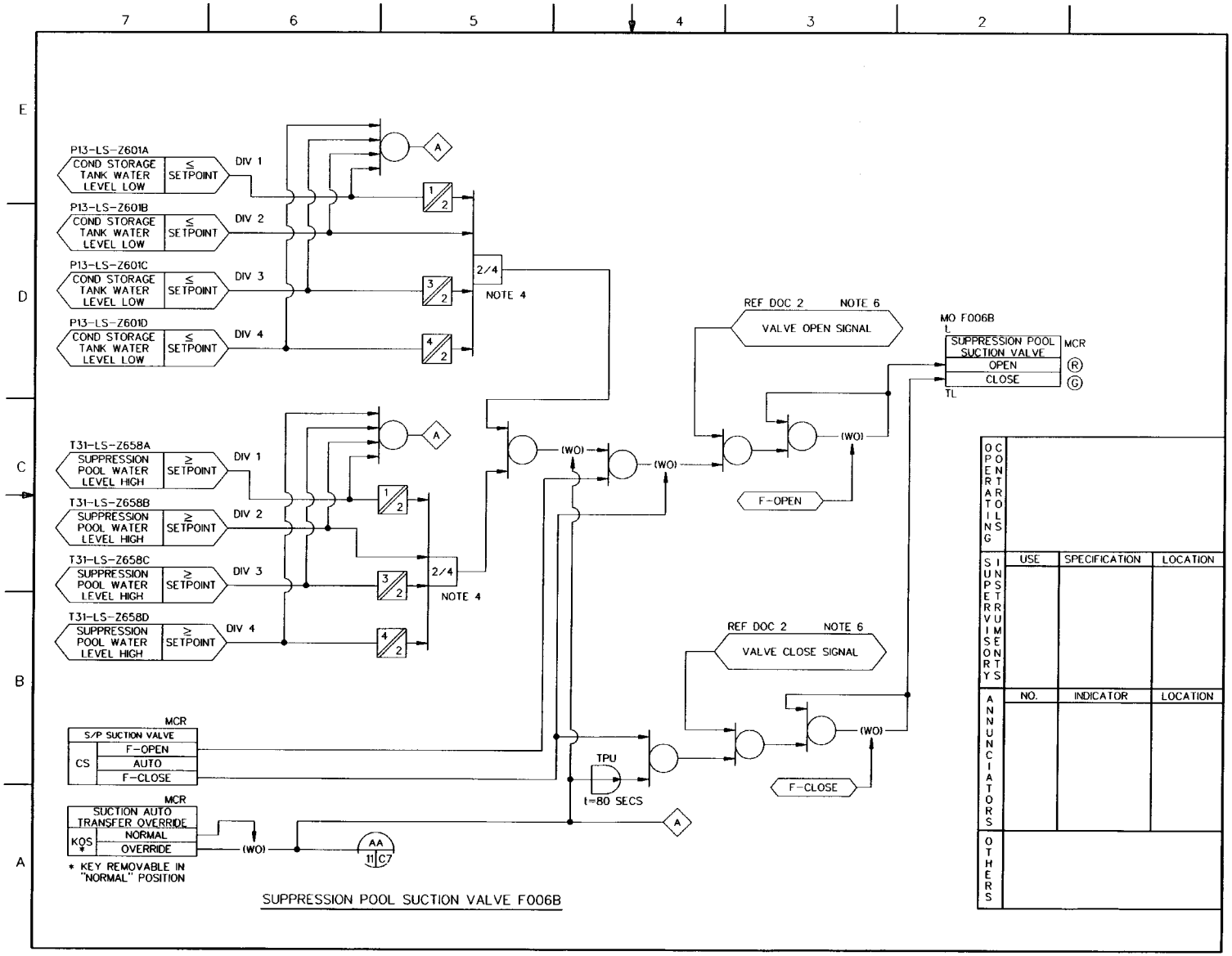

SUPPRESSION POOL SUCTION VALVE F006B

FIGURE 7.3-1 HIGH PRESSURE CORE FLOODER SYSTEM I&D (Sheet 12 of 17)

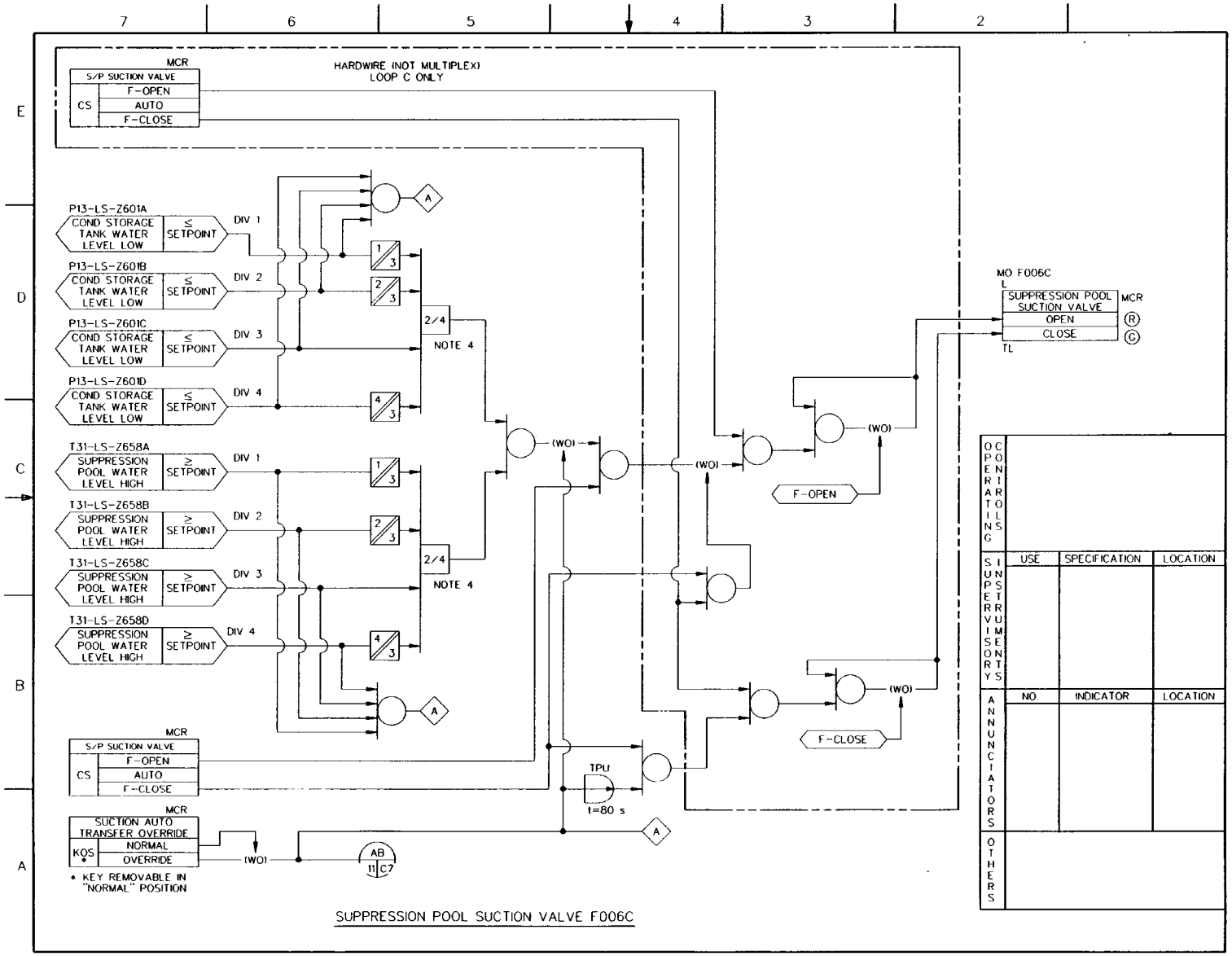

FIGURE 7.3-1 HIGH PRESSURE CORE FLOODER SYSTEM IBD (Sheet 13 of 17)

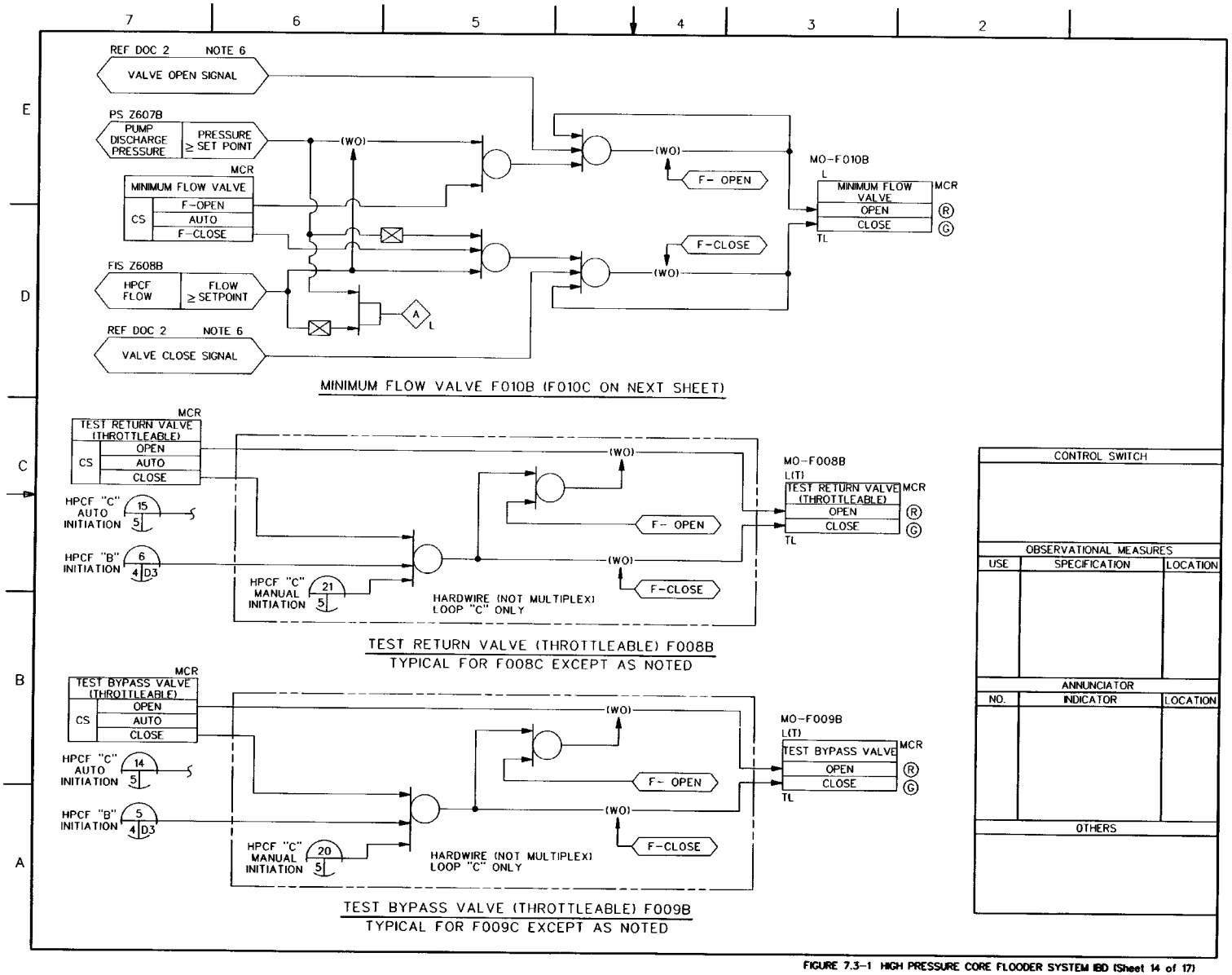

FIGURE 7.3-1 HIGH PRESSURE CORE FLOODER SYSTEM I&D (Sheet 14 of 17)

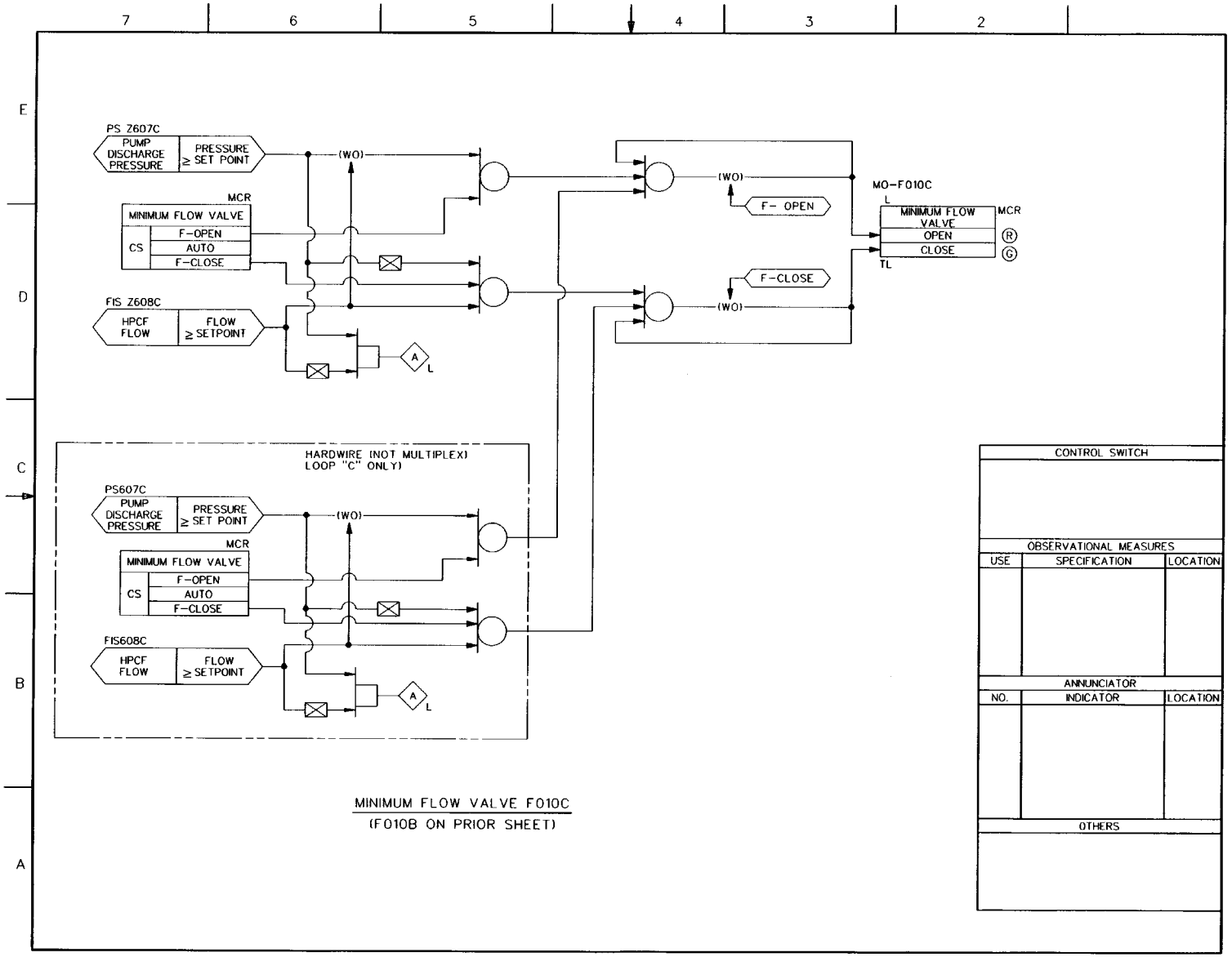

FIGURE 7.3-1 HIGH PRESSURE CORE FLOODER SYSTEM IBD (Sheet 15 of 17)

TABLE 2: THERMAL RELAY BYPASS MCC EQUIPMENT LIST
FOR HPCF LOOP B (TYPICAL FOR HPCF LOOP C)

SYSTEM	EQUIPMENT ID	DESCRIPTION
HPCF LOOP B	E22-MO-F001B	HPCF CST SUCTION VALVE
	E22-MO-F003B	HPCF INJECTION VALVE
	E22-MO-F006B	HPCF S/P SUCTION VALVE
	E22-MO-F008B	HPCF TEST RETURN VALVE (THROTTLEABLE)
	E22-MO-F009B	HPCF TEST BYPASS VALVE
	E22-MO-F010B	HPCF MINIMUM FLOW VALVE

HPCF LOOP B - THERMAL RELAY BYPASS LOGIC

(LOOP "C" ON NEXT SHEET)

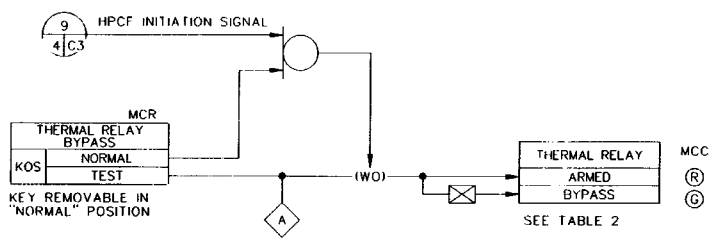

CONTROL SWITCH

OBSERVATIONAL MEASURES		
USE	SPECIFICATION	LOCATION

ANNUNCIATOR		
NO.	INDICATOR	LOCATION

OTHERS

FIGURE 7.3-1 HIGH PRESSURE CORE FLOODER SYSTEM (BD (Sheet 16 of 17)

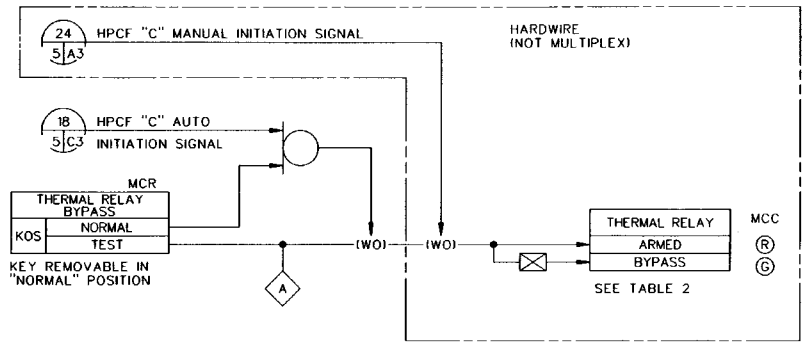

HPCF LOOP "C" – THERMAL RELAY BYPASS LOGIC

(LOOP "B" ON PRIOR SHEET)

CONTROL SWITCH

OBSERVATIONAL MEASURES		
USE	SPECIFICATION	LOCATION

ANNUNCIATOR		
NO.	INDICATOR	LOCATION

OTHERS

FIGURE 7.3-1 HIGH PRESSURE CORE FLOODER SYSTEM I&D (Sheet 17 of 17)

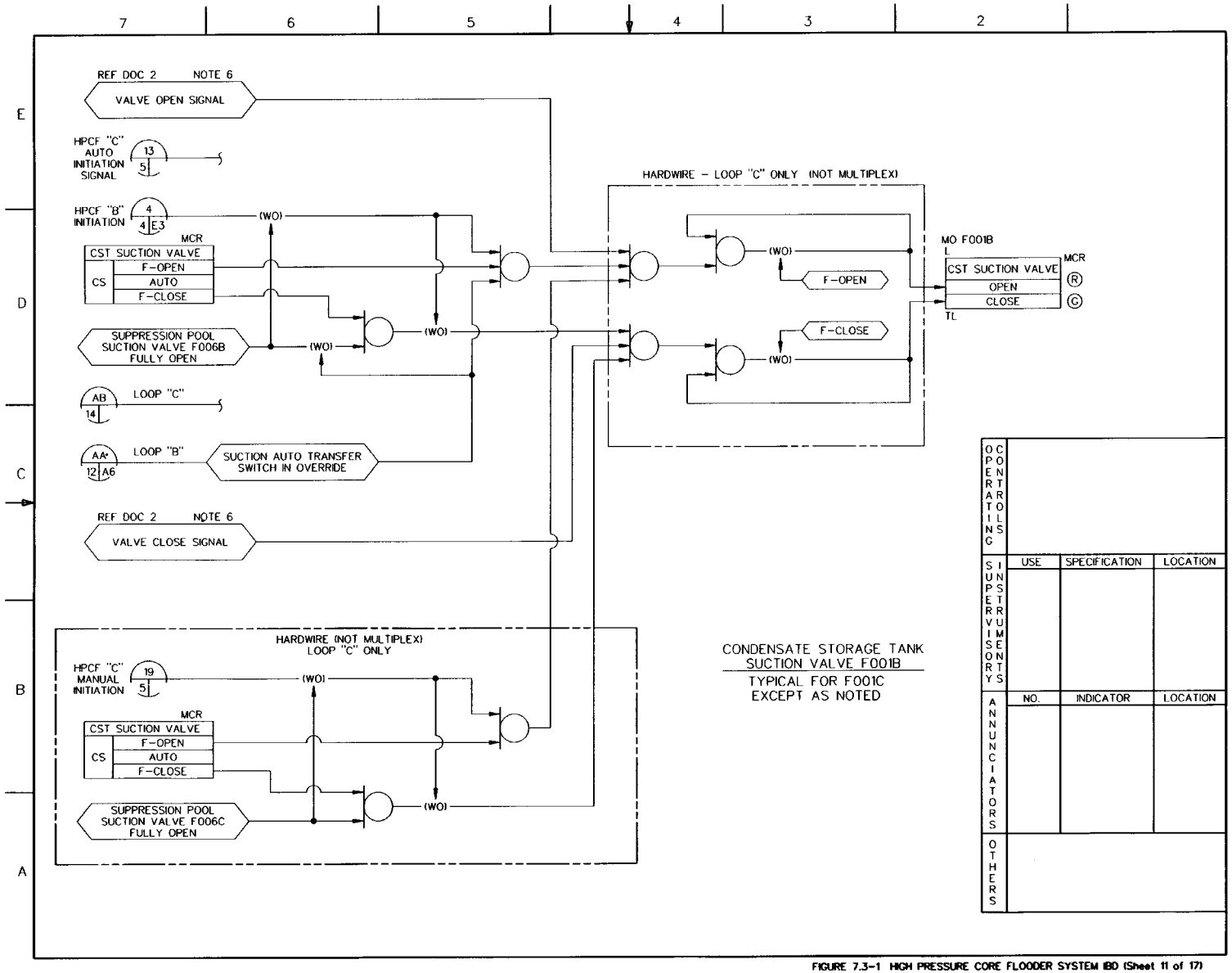

FIGURE 7.3-1 HIGH PRESSURE CORE FLOODER SYSTEM IBD (Sheet 11 of 17)

SH. NO.	TITLES
1	CONTENTS
2	NOTES AND REFERENCES
3	SRV LOGIC AND CONTROL DIVISION 1 FOR SRV F010P
4	SRV LOGIC AND CONTROL DIVISION 2 FOR SRV F010J
5	SRV LOGIC AND CONTROL DIVISIONS 3(2,3) FOR SRV'S F010M(F010S, F010B)
6	SRV LOGIC AND CONTROL DIVISION 1 FOR SRV F010G
7	SRV LOGIC AND CONTROL DIVISION 1 FOR SRV F010K
8	SRV LOGIC AND CONTROL DIVISIONS 2(3,1) FOR SRV'S F010E(F010U, F010D)
9	SRV LOGIC AND CONTROL DIVISIONS 2(3,1,2) FOR SRV'S F010N(F010H, F010T, F010C)
10	SRV LOGIC AND CONTROL DIVISIONS 3(1,2,3) FOR SRV'S F010L(F010F, F010R, F010A)
11	ADS LOGIC AND CONTROL
12	ADS LOGIC AND CONTROL (CONTINUED)
13	ADS LOGIC AND CONTROL (CONTINUED)
14	ADS LOGIC AND CONTROL (CONTINUED)
15	ADS LOGIC AND CONTROL (CONTINUED)
16	ADS LOGIC AND CONTROL (CONTINUED)
17	ADS LOGIC AND CONTROL (CONTINUED)
18	ADS LOGIC AND CONTROL (CONTINUED)
19	FEEDWATER VALVES F001A(F001B)
20	FEEDWATER CHECK VALVES F003A(F003B)
21	FEEDWATER GATE VALVES F005A(F005B)
22	CUW RETURN FW LOOP SELECTOR VALVES F007A(F007B)
23	MAIN STEAM BYPASS/DRAIN ISOLATION VALVE F011(F012)
24	STEAM LINE DRAIN VALVES F013(F014, F016)
25	MAIN STEAM DRAIN LINE AOV'S F015(F017)
26	RPV HEAD VENT VALVES F018(F019, F020)
27	RPV WATER LEVEL ALARMS AND INDICATORS
28	LOW RPV METAL & BOTTOM DRAIN TEMPERATURE ALARM & RECORDER
29	HIGH DRYWELL PRESSURE ALARMS AND INDICATORS
30	SRV VALVE STEM POSITION ALARM
31	SRV DISCHARGE LINE AND RPV VENT DISCHARGE LINE HIGH TEMP ALARM
32	MSIV VALVE STEM POSITION SWITCHES
33	RPV HEAD SEAL LEAKOFF HIGH PRESSURE ALARM
34	ANNUNCIATOR LIST
35	ANNUNCIATOR LIST (CONTINUED)
36	SSLC (LDS/ECCS) BLOCK DIAGRAM DIV 1 (TYPICAL FOR DIV 2 & DIV 3)
37	SSLC (LDS/ECCS) BLOCK DIAGRAM (CONTINUED)

MPL NO. B21-1030

CONTENTS

FIGURE 7.3-2 NUCLEAR BOILER SYSTEM IBD (Sheet 1 of 37)

NOTES:

1. PRESSURES SHALL BE IN MPa g.
2. THE ADS LOAD DRIVERS SHALL BE CONNECTED SO THAT IT IS NECESSARY TO ENERGIZE BOTH ADS CHANNELS TO ACTUATE THE ADS VALVES.
3. PARTS OF THE LOGIC AND CONTROL SYSTEM FOR THE OPERATION OF THE SRV'S IN THE RELIEF MODE ARE CLASSIFIED AS NON-SAFETY RELATED BUT THE TOTAL SYSTEM IS DESIGNED AS A SAFETY RELATED SYSTEM.
4. DIVISION 2 IS THE SAME AS DIVISION 1 EXCEPT THAT DIVISION 2 SUFFIX LETTERS ARE THOSE IDENTIFIED IN PARENTHESIS.
5. NUMBERS OR LETTERS IN PARENTHESIS DESIGNATE THOSE APPLICABLE TO THE SRV'S WHICH FOLLOW IN SEQUENCE AFTER THE FIRST IN THE GROUP OF 3 OR 4 SRV'S.
6. THE LOGIC SHALL INCORPORATE PROVISIONS TO REVERT 2/4 LOGIC TO 2/3 LOGIC DURING BYPASS OF A SINGLE DIVISION OF SENSORS. ALSO, THE LOGIC DIAGRAM SHALL NOT PERMIT THE BYPASS OF MORE THAN ONE DIVISION OF SENSORS AT A TIME. THE PROVISIONS ARE ILLUSTRATED IN THE SSLC BLOCK DIAGRAM, SH 36, ZONES B4 & C4.
7. ISOLATORS ARE NOT REQUIRED WHERE THE SAME DIVISIONAL LOGIC IS USED FOR BOTH INPUT SIGNALS AND LOGIC.
8. (A) FO IS "FAIL OPEN", FOR EXAMPLE, VALVE OPENS ON LOSS OF POWER AND/OR LOSS OF PNEUMATIC OR HYDRAULIC PRESSURE.

   (B) FC IS "FAIL CLOSED"; FOR EXAMPLE, VALVE CLOSES ON LOSS OF POWER AND/OR LOSS OF PNEUMATIC OR HYDRAULIC PRESSURE.
9. SEE TABLE 1 FOR ANNUNCIATOR/ALARM LIGHT INFORMATION, SH 34 & 35.
10. ALL ANNUNCIATORS ARE LOCATED IN THE MAIN CONTROL ROOM UNLESS OTHERWISE NOTED.
11. THE SRV OUTPUT LOGIC SHALL INCLUDE PROVISIONS TO BYPASS ONE OF TWO CHANNEL OUTPUTS AND TO REVERT 2/2 LOGIC TO 1/1 LOGIC WHEN BYPASSED. THE PROVISIONS ARE ILLUSTRATED IN THE SSLC BLOCK DIAGRAM, SH 36 & 37. ALSO SEE NOTE 3 ON SH 37. POWER SOURCE CONNECTIONS FOR SRV'S ARE 125V DC AND 125V DC RETURN AS SHOWN.
12. ADS OUTPUT LOGIC SHALL NOT INCLUDE PROVISIONS TO BYPASS THE DUAL OUTPUTS. SINGLE CHANNEL FAILURE IN ONE ADS DIVISION SHALL CAUSE LOSS OF OUTPUT FUNCTION IN THAT ADS DIVISION ONLY AS SHOWN ON SH 37.
13. MONITOR THE CONTINUITY OF THE SRV ADS SOLENOIDS BY APPLICATION OF A NON-ENERGIZING CURRENT TO EACH SOLENOID.
14. INTERMEDIATE PROCESSOR WHICH PREVENTS THE FAILURE OF THE NON-SAFETY RELATED DATA FROM AFFECTING THE SAFETY RELATED LOGIC.
15. THIS SIGNAL LINE SHALL BE HARDWIRED. INDICATORS REQUIRED TO BE HARDWIRED ARE SHOWN ON THIS DRAWING.
16. SIGNALS TO ANNUNCIATORS AND NON-SAFETY INDICATORS SHALL BE OPTICALLY ISOLATED FROM THE SAFETY RELATED INPUT SIGNAL.

REFERENCE DOCUMENTS UNDER THE FOLLOWING IDENTITIES ARE TO BE USED IN CONJUNCTION WITH THIS DRAWING.

	MPL NO.
1. NUCLEAR BOILER SYSTEM, P&ID	B21-1010
2. REMOTE SHUTDOWN SYS, IBD	C61-1030
3. RESIDUAL HEAT REMOVAL SYSTEM, P&ID	E11-1010
4. HIGH PRESSURE CORE FLOODER, P&ID	E22-1010
5. LEAK DETECTION SYSTEM, IBD	E31-1030
6. REACTOR PROTECTION SYSTEM, IED	C71-1040
7. TURBINE CONTROL SYSTEM, IBD	N32-1030

SUPPORTING DOCUMENTS	MPL NO.
1. INTERLOCK BLOCK DIAGRAM (IBD) STANDARD	A10-3070

NOTES AND REFERENCES

FIGURE 7.3-2 NUCLEAR BOILER SYSTEM IBD (Sheet 2 of 37)

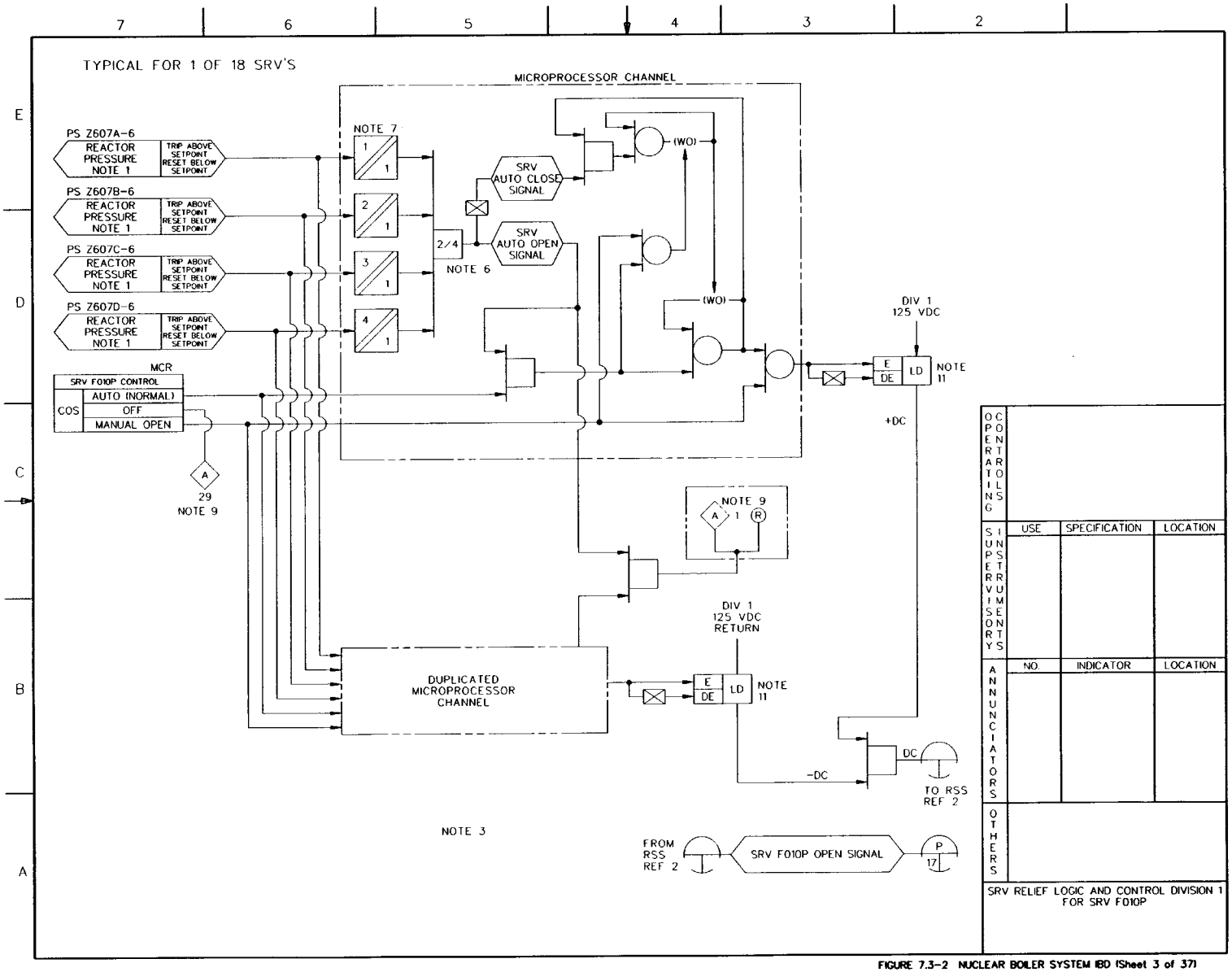

FIGURE 7.3-2 NUCLEAR BOILER SYSTEM IBD (Sheet 3 of 37)

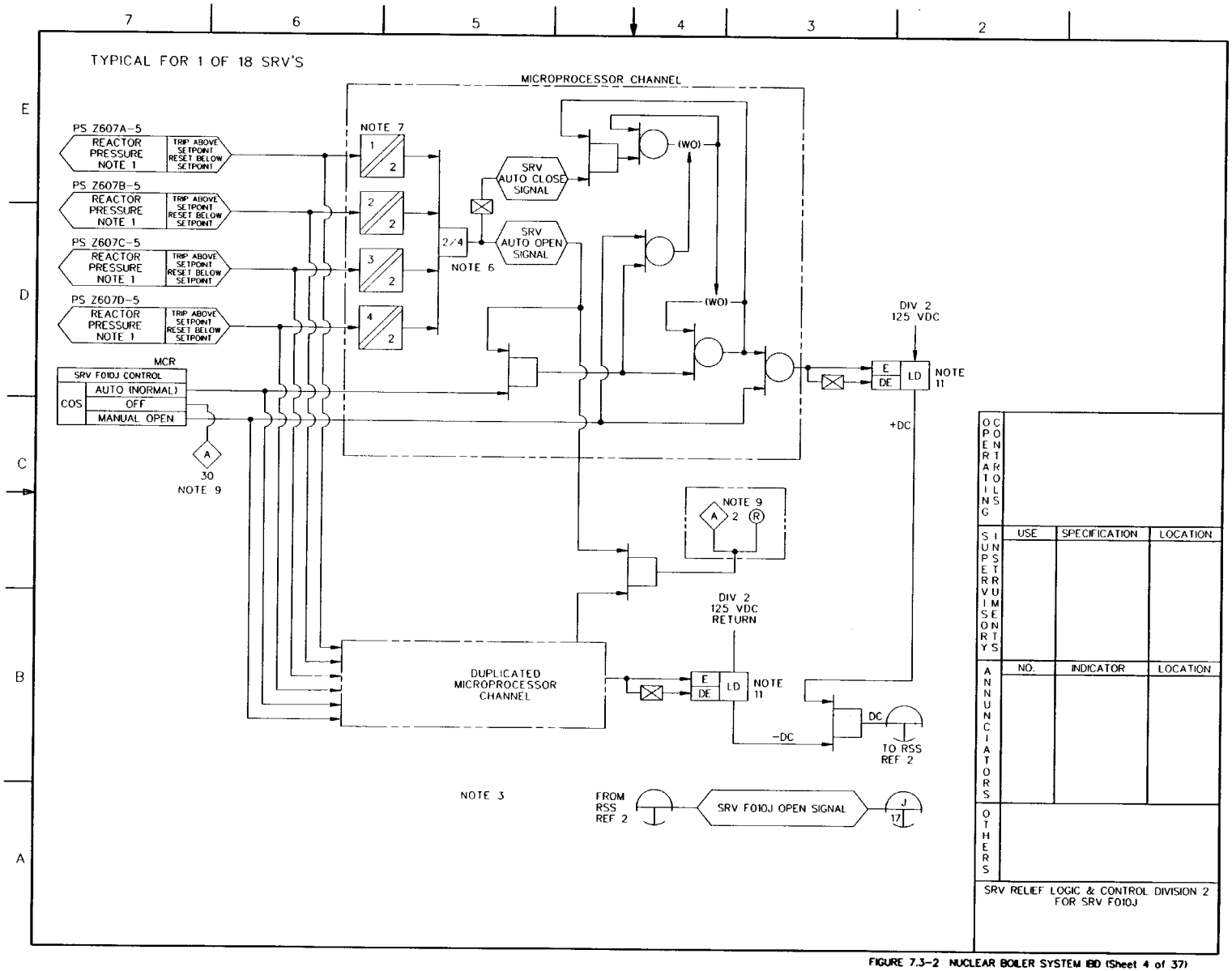

FIGURE 7.3-2 NUCLEAR BOILER SYSTEM IBD (Sheet 4 of 37)

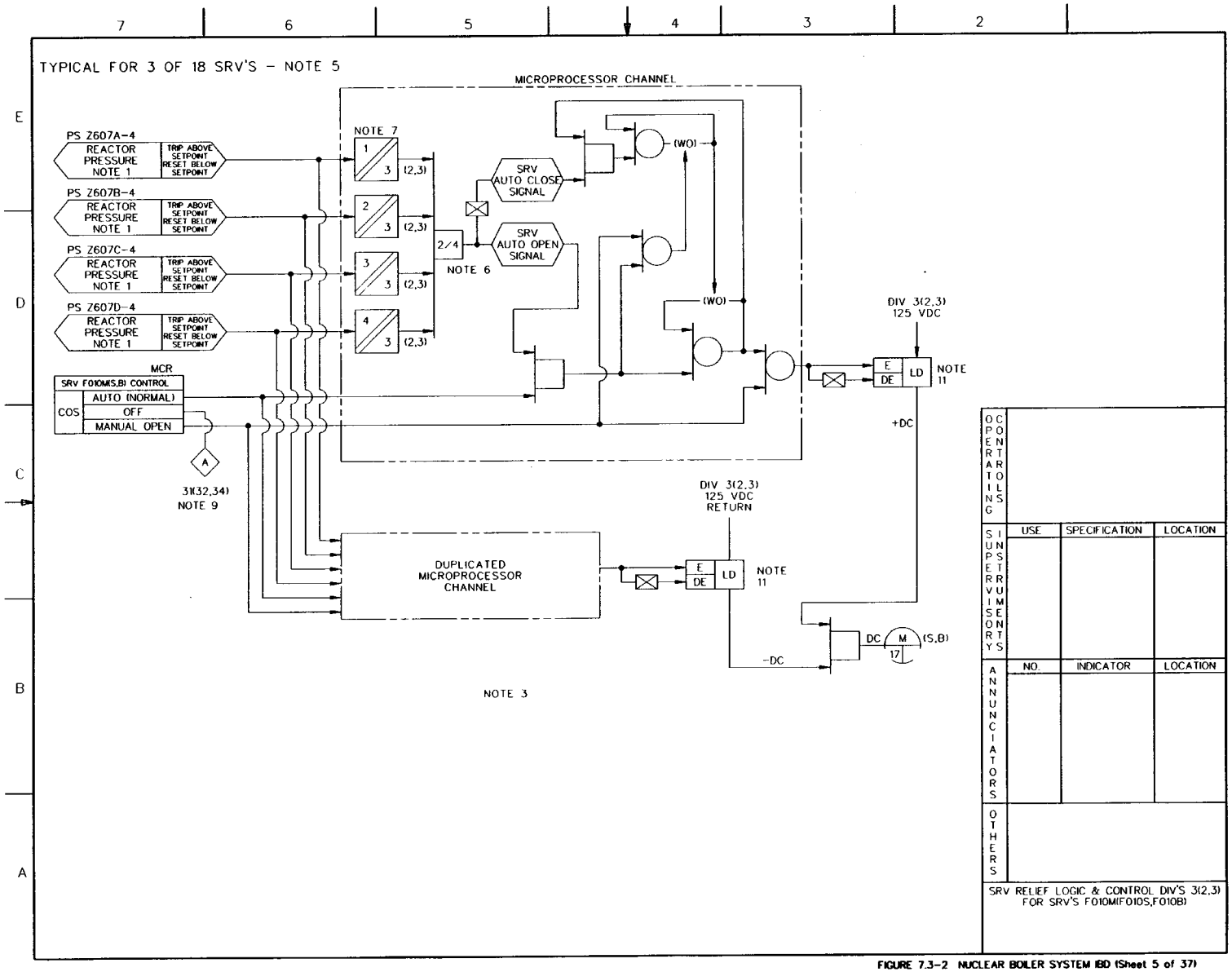

FIGURE 7.3-2 NUCLEAR BOILER SYSTEM IBD (Sheet 5 of 37)

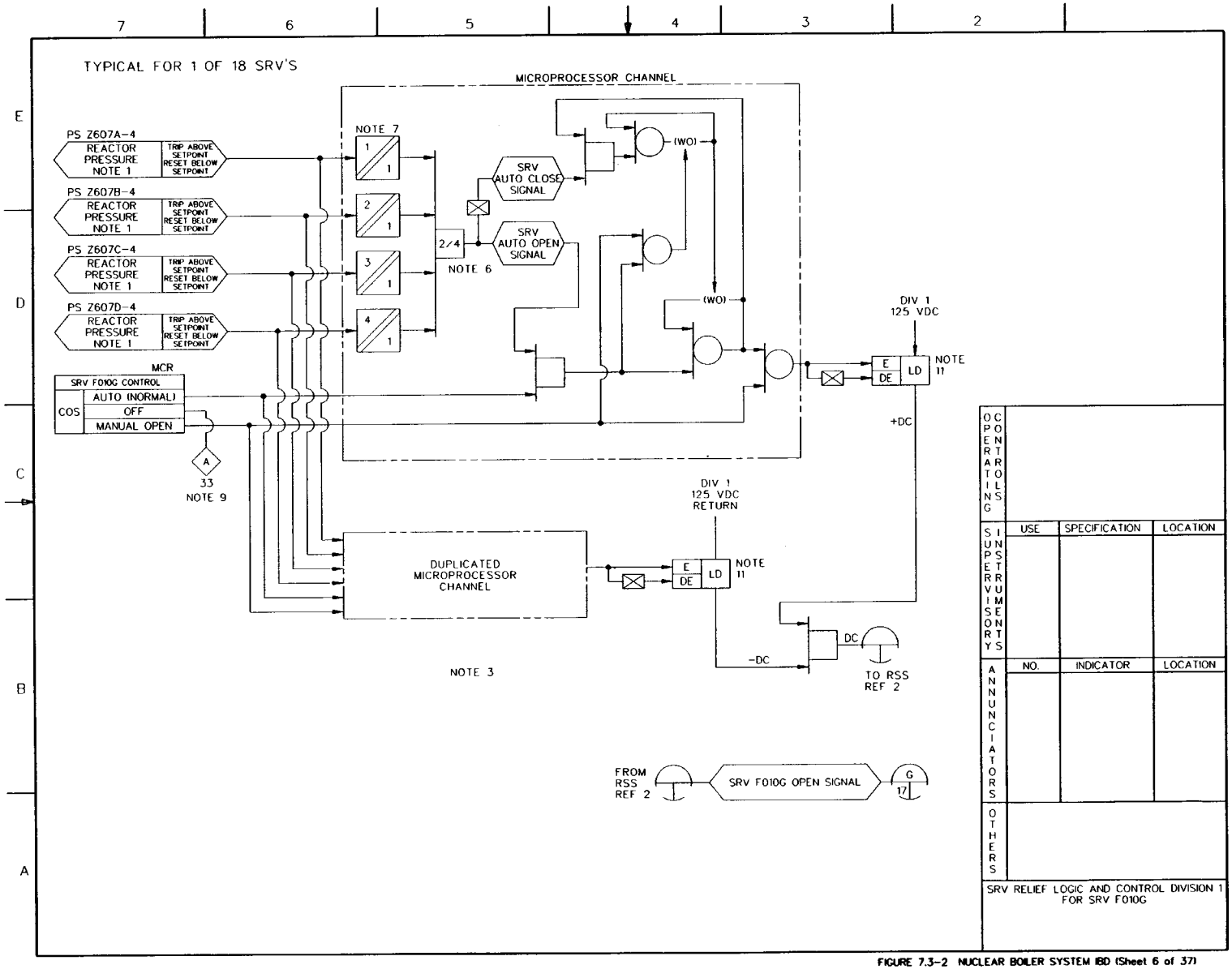

FIGURE 7.3-2 NUCLEAR BOILER SYSTEM I&D (Sheet 6 of 37)

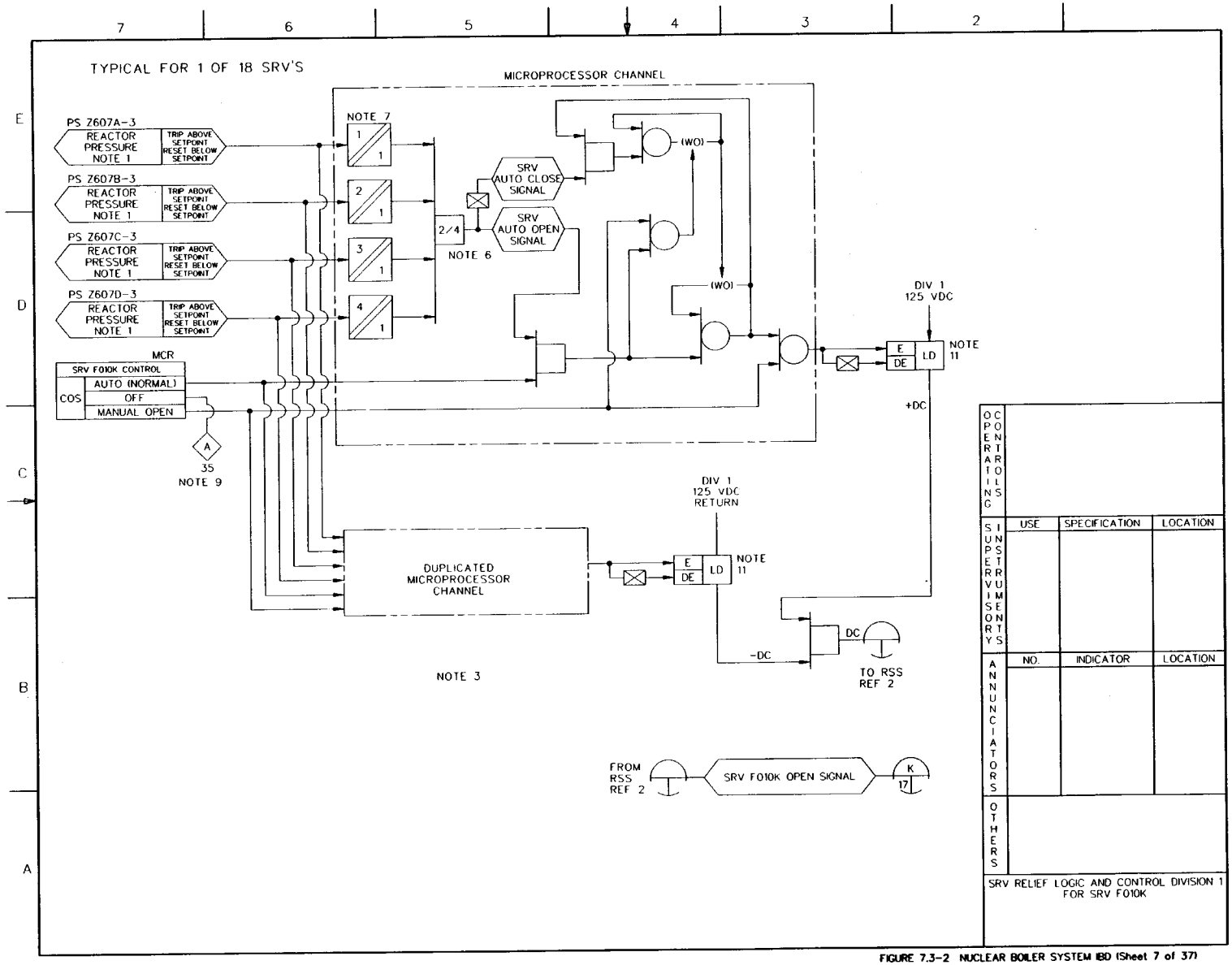

FIGURE 7.3-2 NUCLEAR BOILER SYSTEM IBD (Sheet 7 of 37)

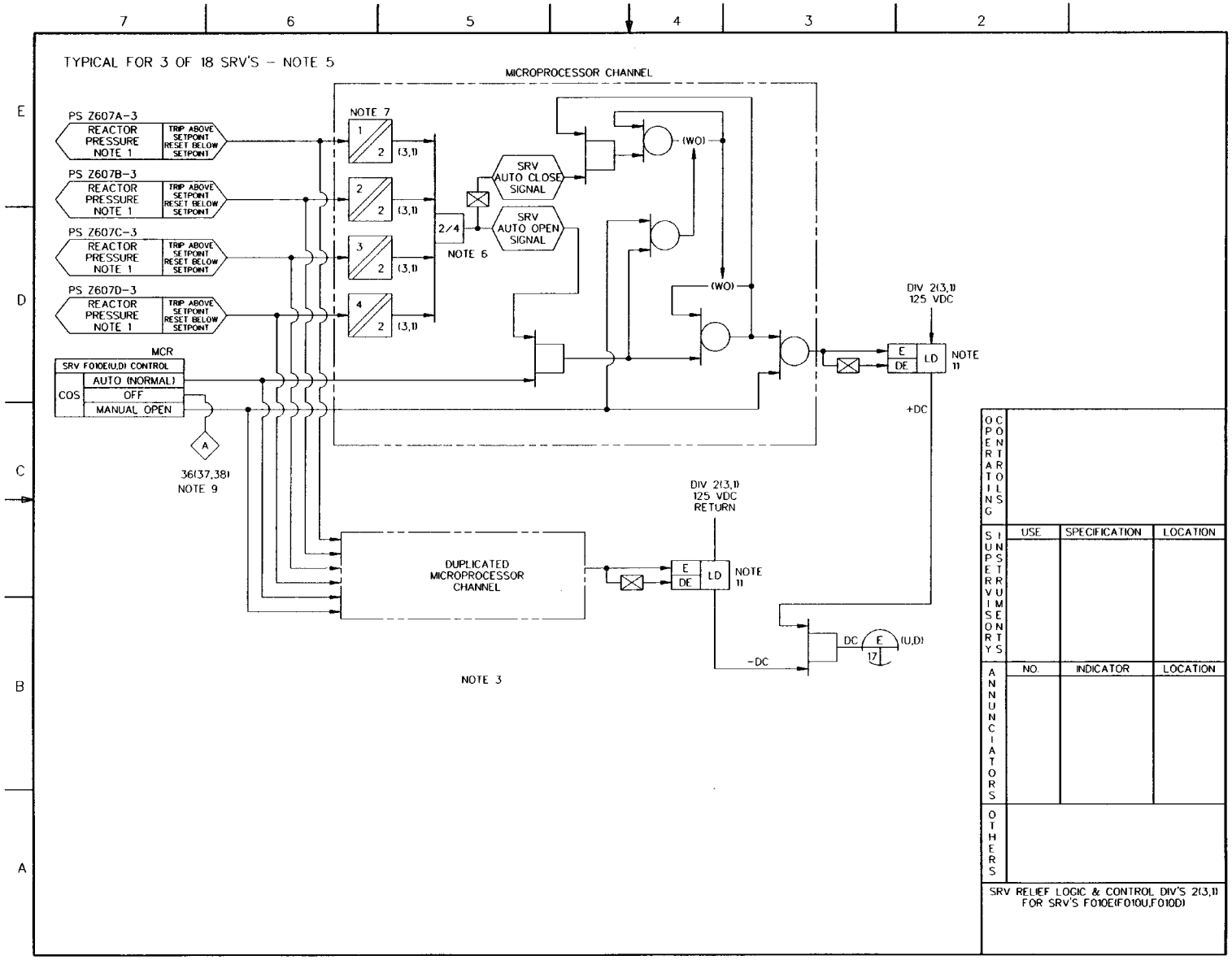

FIGURE 7.3-2 NUCLEAR BOILER SYSTEM IBD (Sheet 8 of 37)

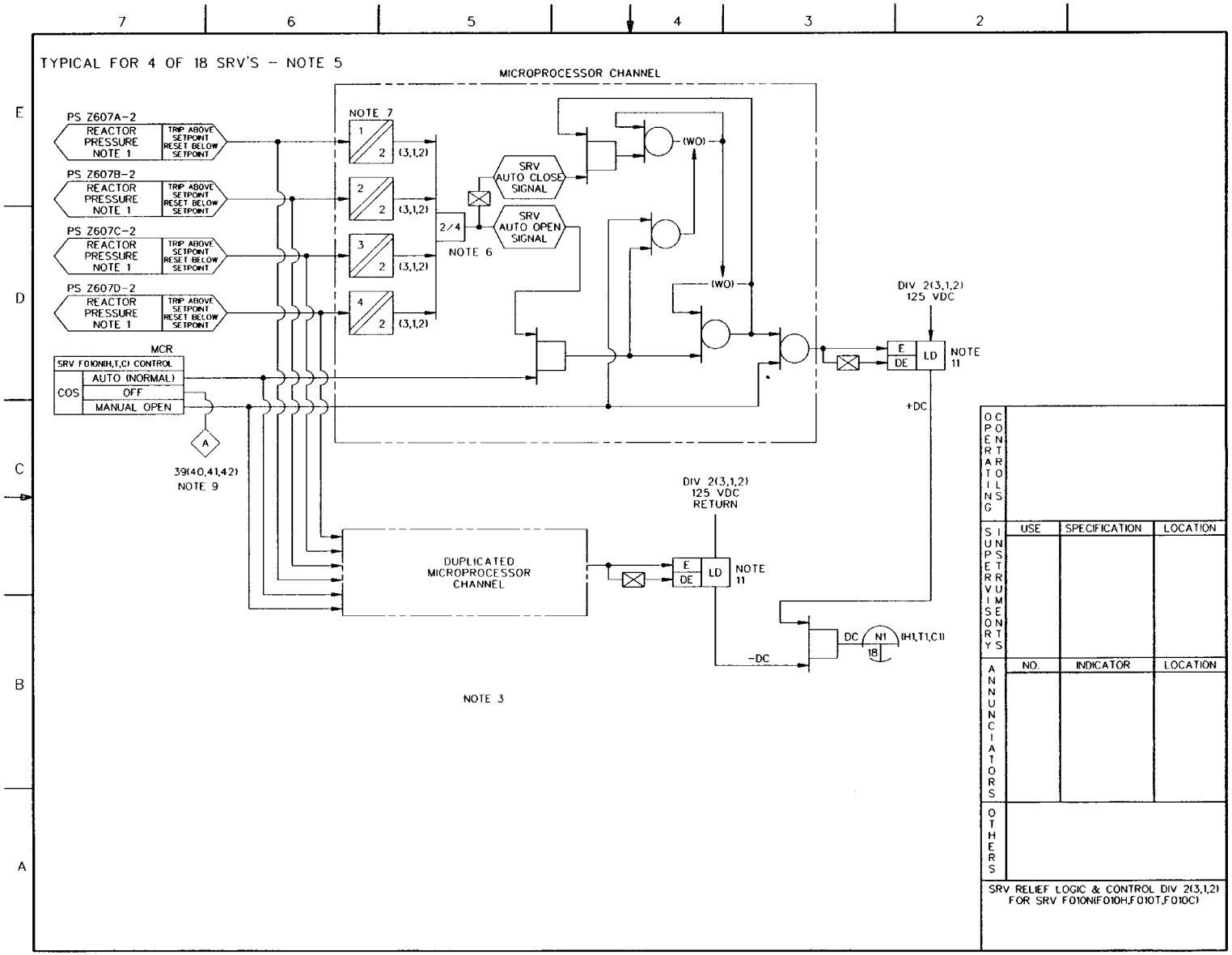

FIGURE 7.3-2 NUCLEAR BOILER SYSTEM IBD (Sheet 9 of 37)

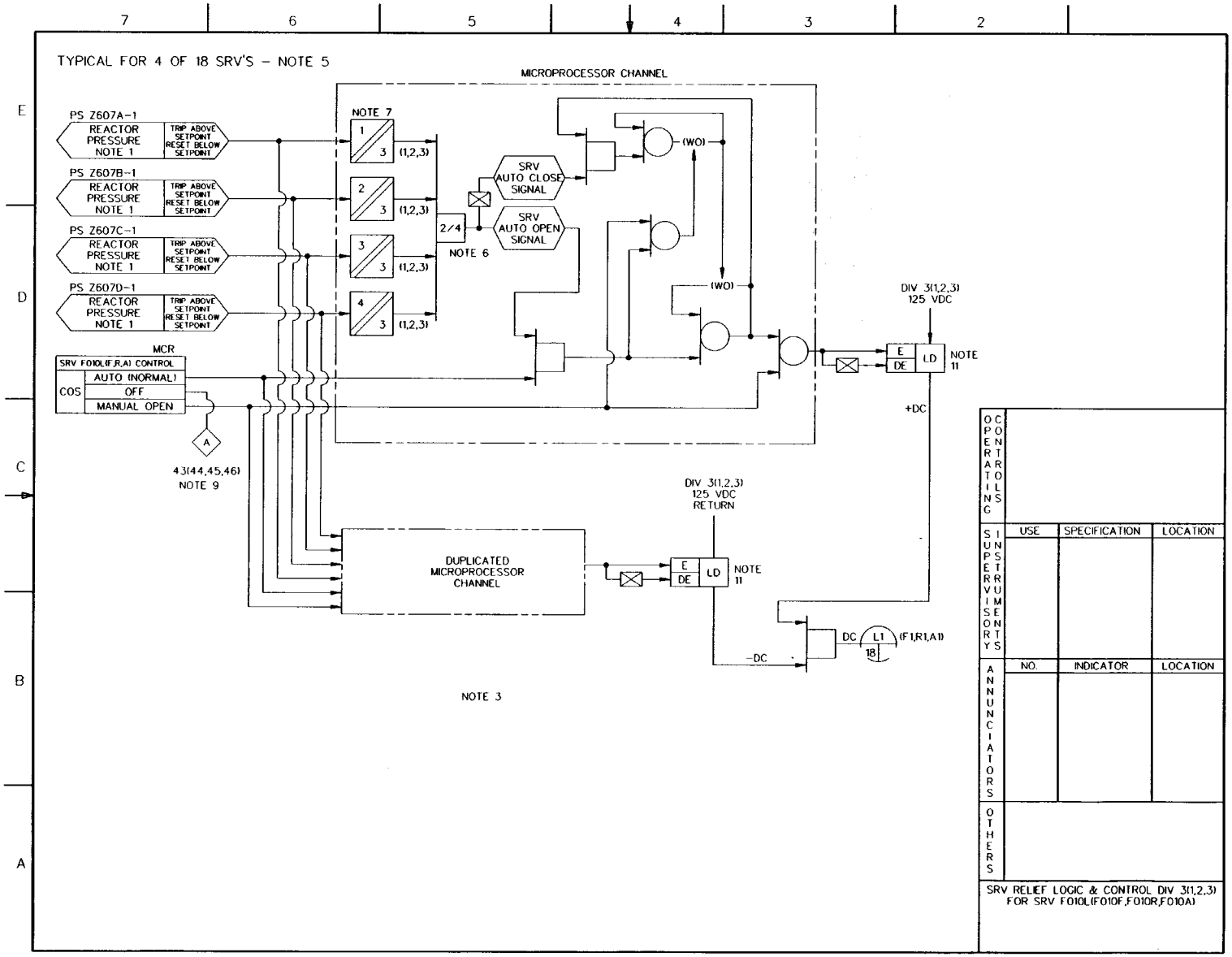

FIGURE 7.3-2 NUCLEAR BOILER SYSTEM IBD (Sheet 10 of 37)

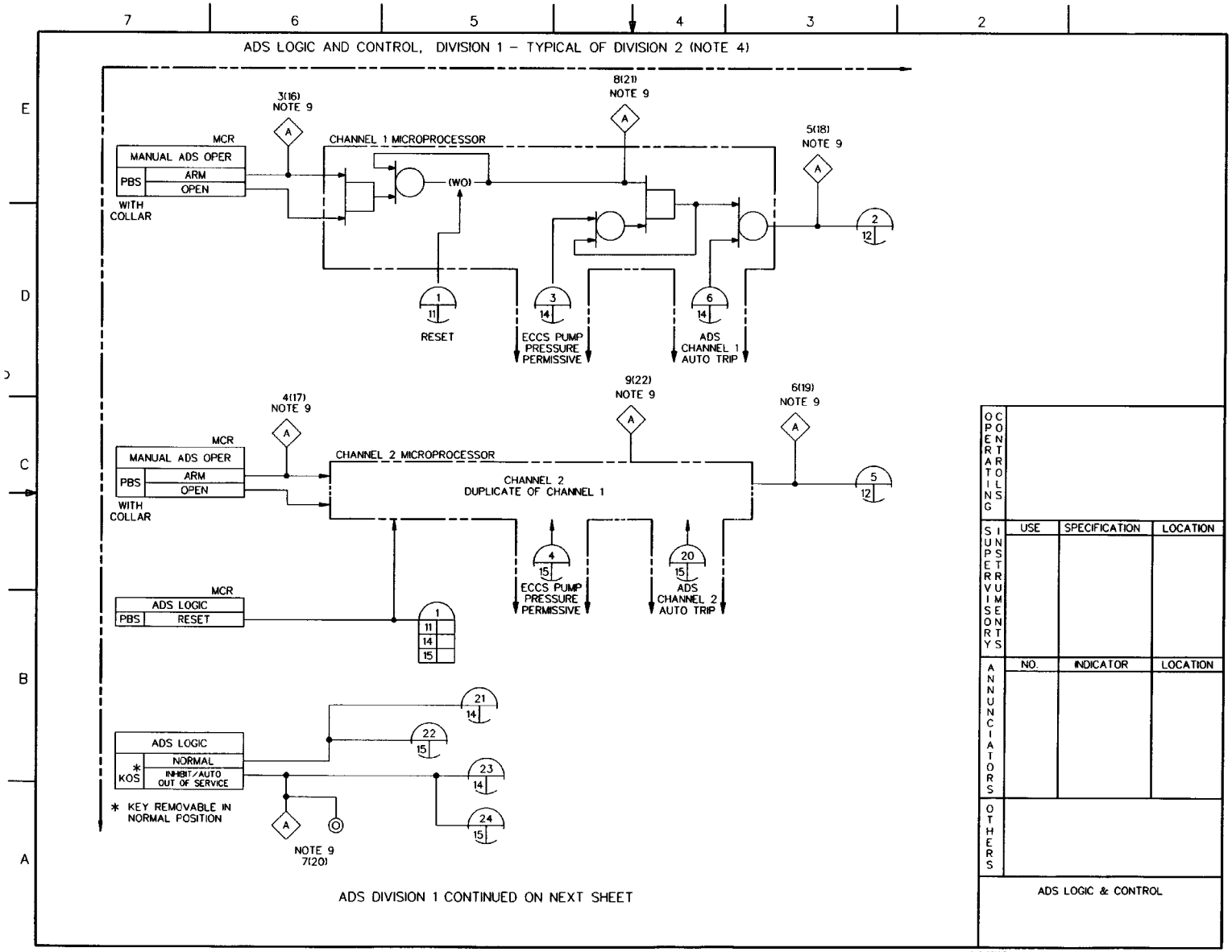

Figure 7.3-2 NUCLEAR BOILER SYSTEM IBD (Sheet 11 of 37)

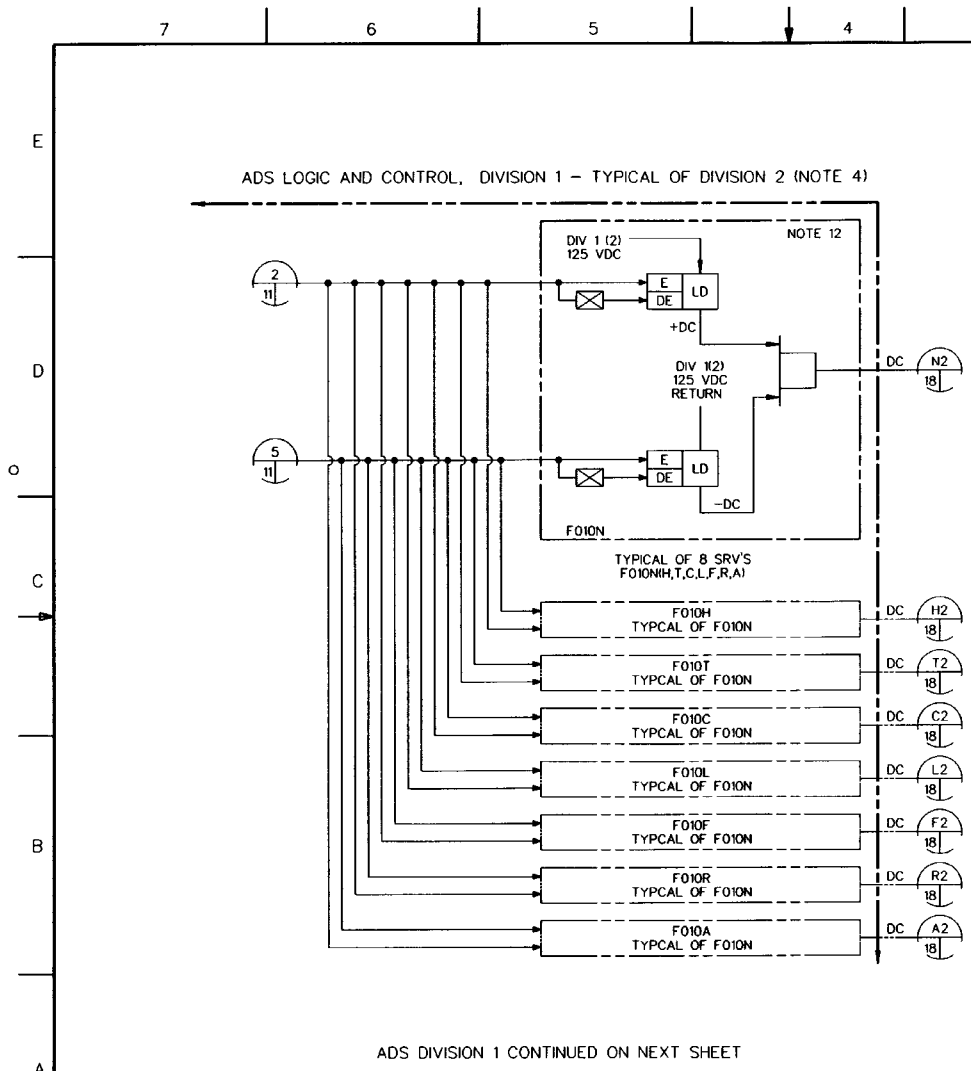

OPERATING SUPERVISORY INSTRUMENTS	USE	SPECIFICATION	LOCATION

ANNUNCIATORS	NO.	INDICATOR	LOCATION

OTHERS

ADS LOGIC & CONTROL (CONT'D)

Figure 7.3-2 NUCLEAR BOILER SYSTEM IBD (Sheet 12 of 37)

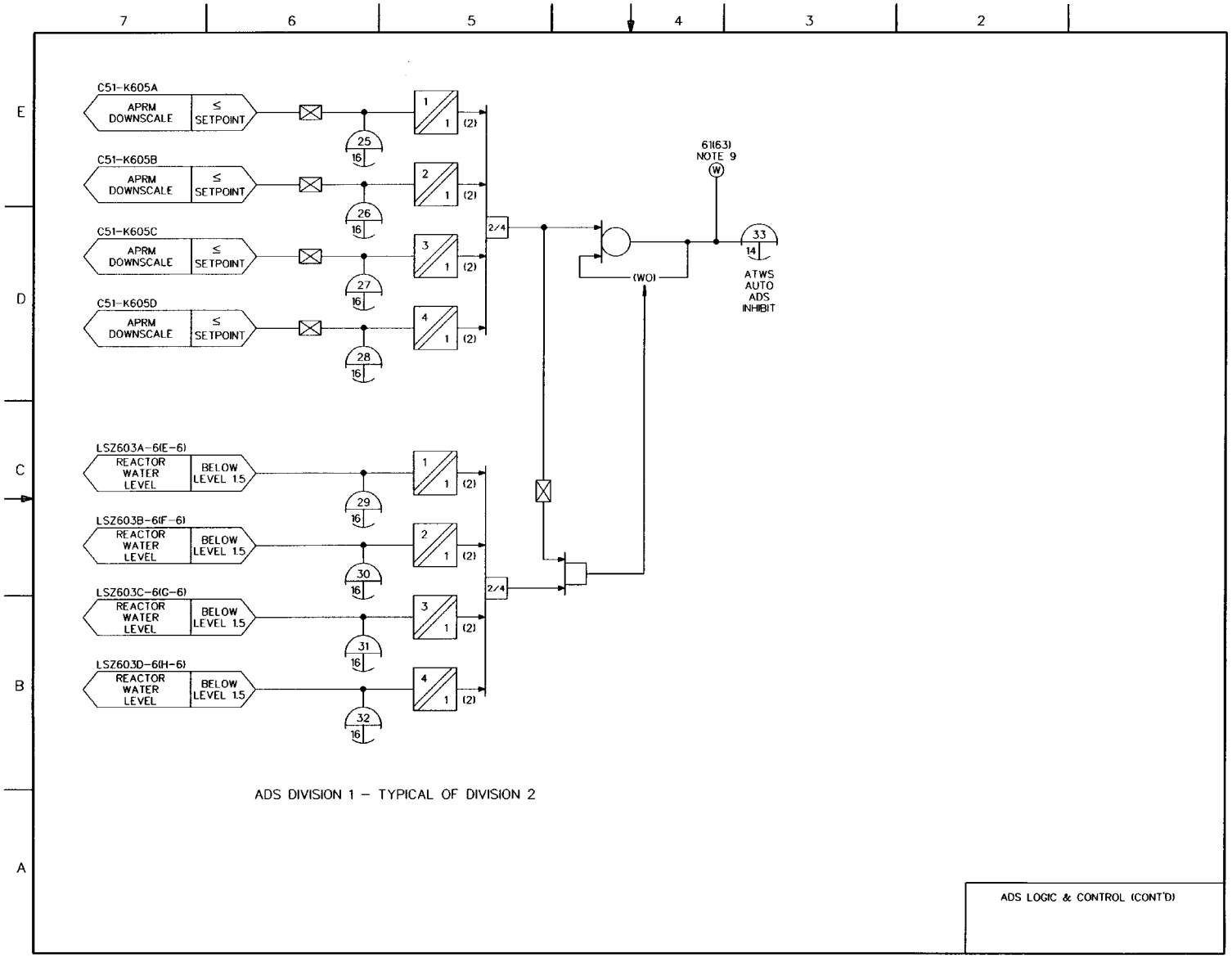

ADS LOGIC & CONTROL (CONT'D)

FIGURE 7.3-2 NUCLEAR BOILER SYSTEM (BD (Sheet 13 of 37)

21-167

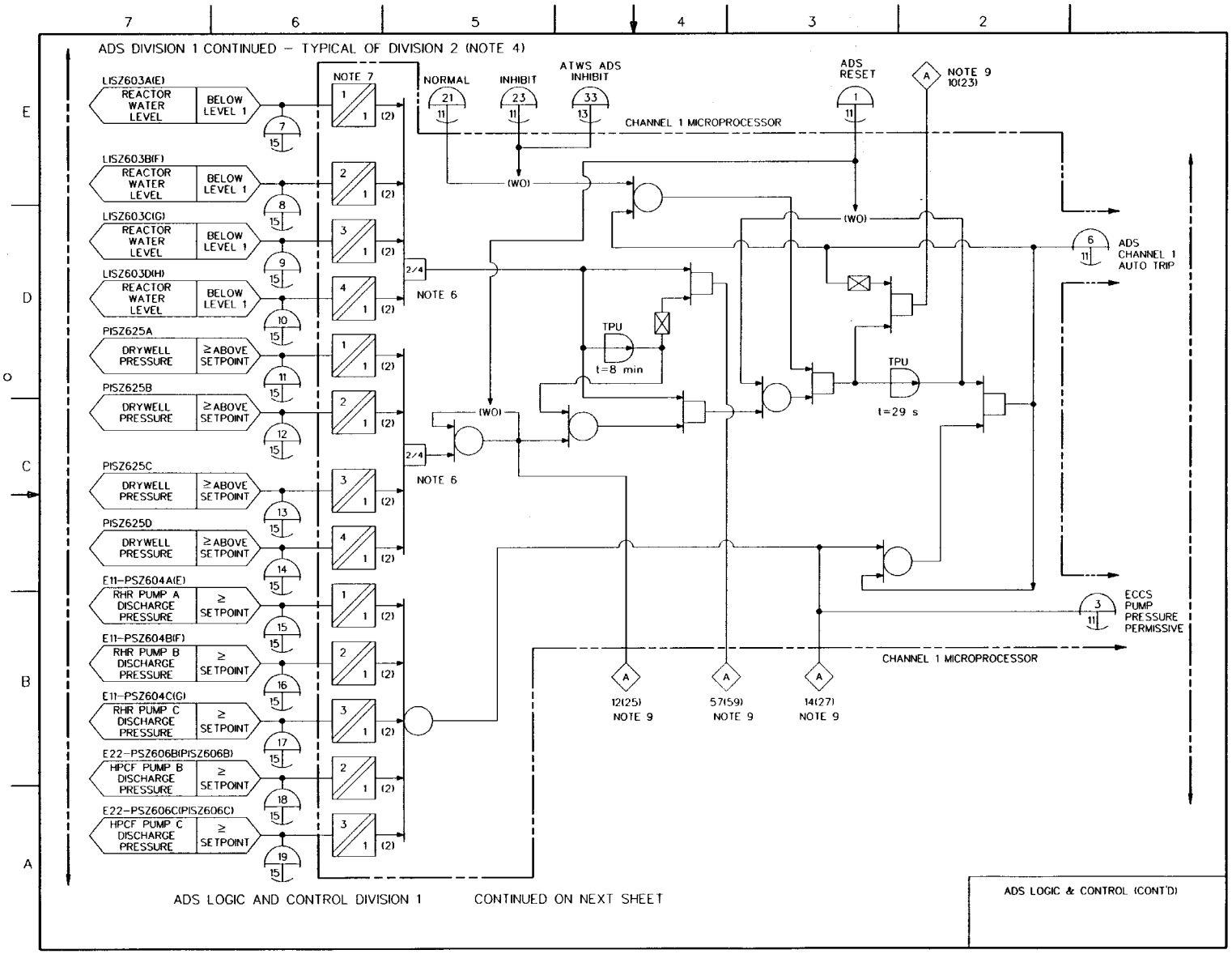

FIGURE 7.3-2 NUCLEAR BOILER SYSTEM IBD (Sheet 14 of 37)

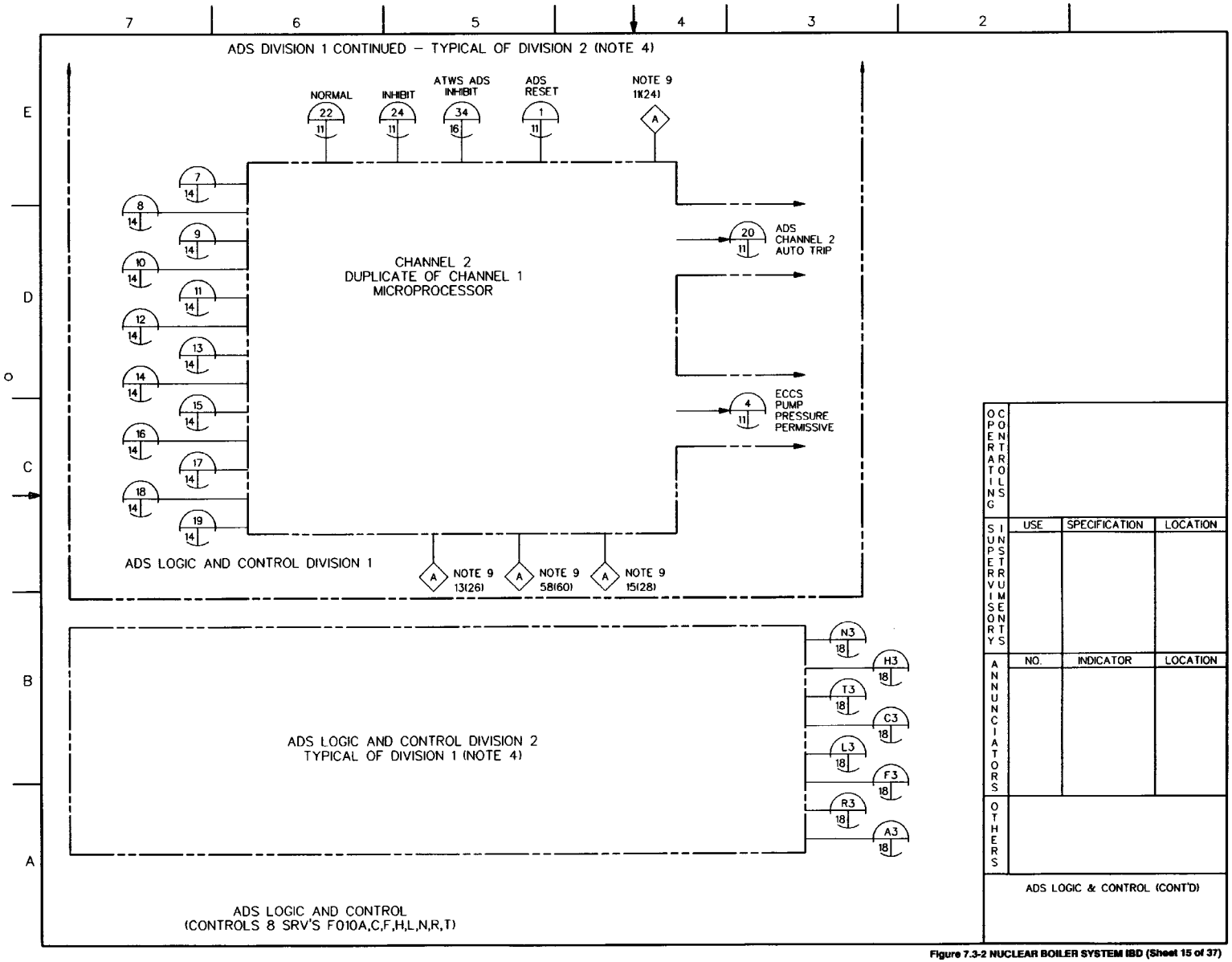

Figure 7.3-2 NUCLEAR BOILER SYSTEM IBD (Sheet 15 of 37)

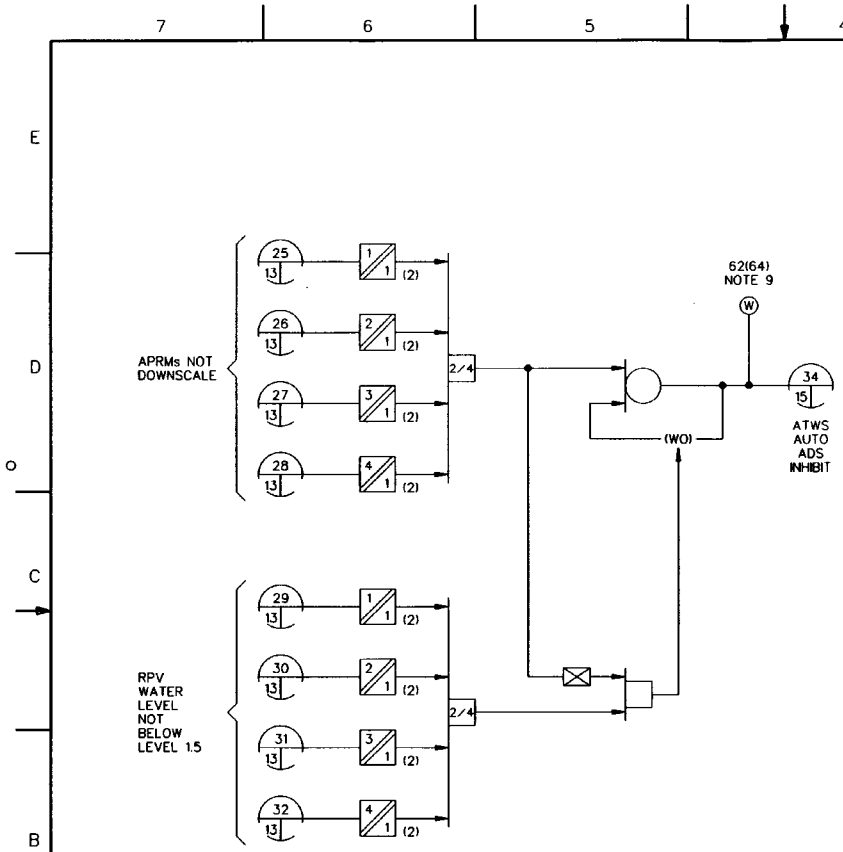

OPERATING CONTROLS			
SUPERVISORY INSTRUMENTS	USE	SPECIFICATION	LOCATION
ANNUNCIATORS	NO.	INDICATOR	LOCATION
OTHERS			

ADS LOGIC & CONTROL (CONT'D)

Figure 7.3-2 NUCLEAR BOILER SYSTEM IBD (Sheet 16 of 37)

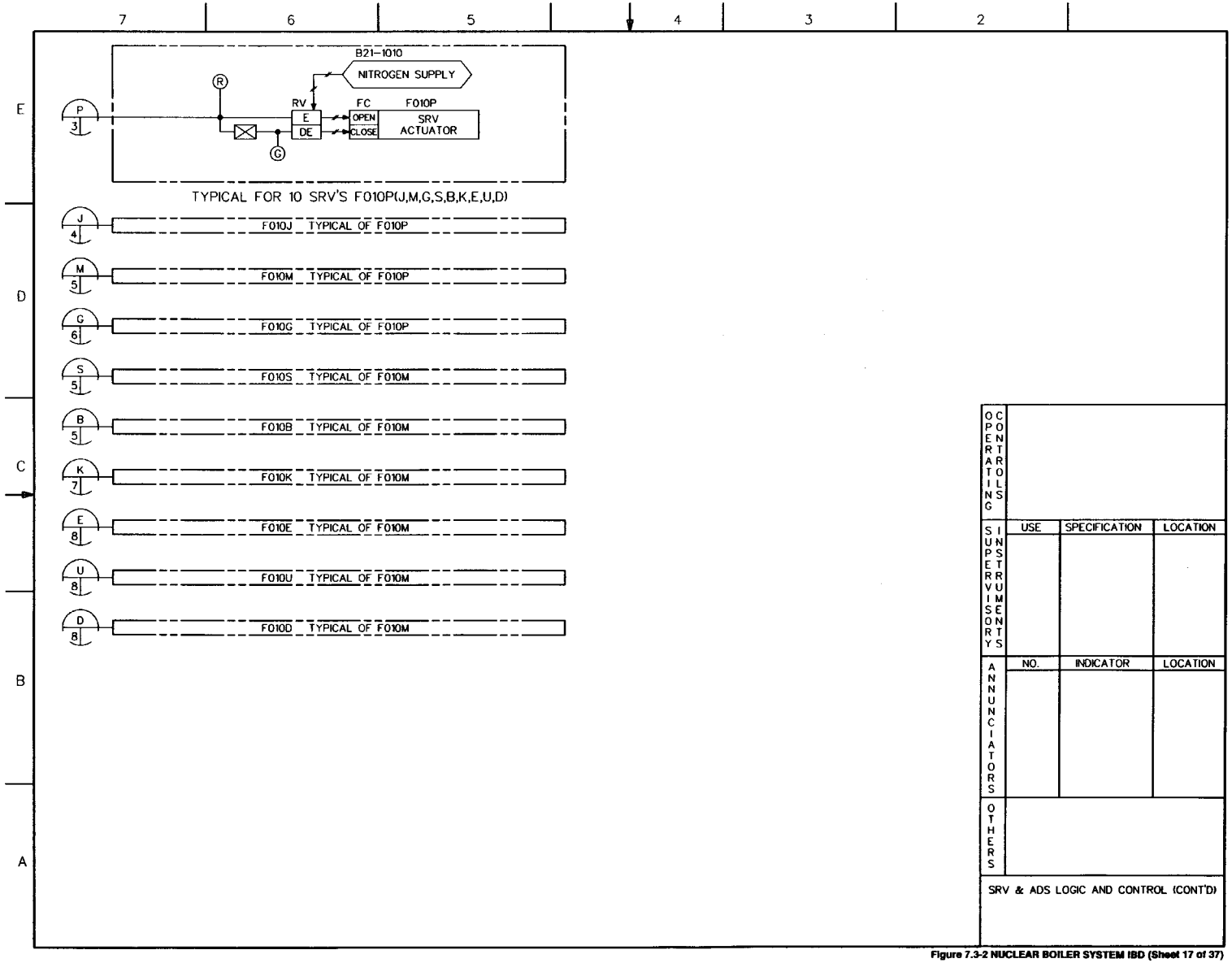

Figure 7.3-2 NUCLEAR BOILER SYSTEM IBD (Sheet 17 of 37)

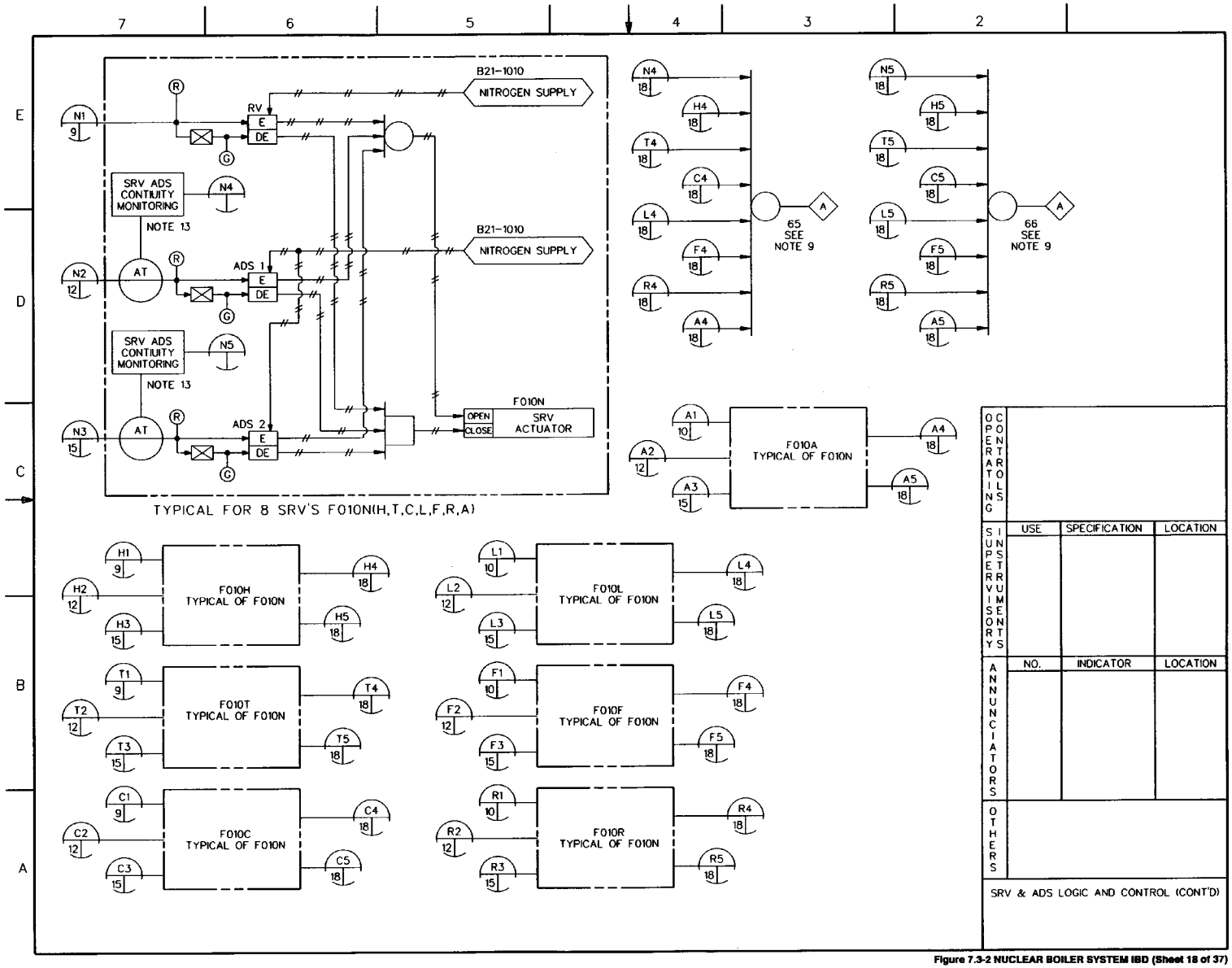

Figure 7.3-2 NUCLEAR BOILER SYSTEM IBD (Sheet 18 of 37)

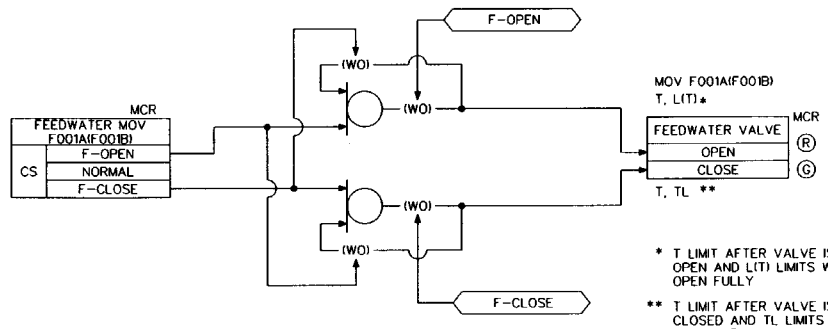

* T LIMIT AFTER VALVE IS PARTLY OPEN AND L(T) LIMITS WHEN VALVE OPEN FULLY

** T LIMIT AFTER VALVE IS PARTLY CLOSED AND TL LIMITS WHEN VALVE CLOSES FULLY

OPERATING CONTROLS			
SUPERVISORY INSTRUMENTS	USE	SPECIFICATION	LOCATION
ANNUNCIATORS	NO.	INDICATOR	LOCATION
OTHERS			

FEEDWATER VALVES F001A(F001B)

Figure 7.3-2 NUCLEAR BOILER SYSTEM IBD (Sheet 19 of 37)

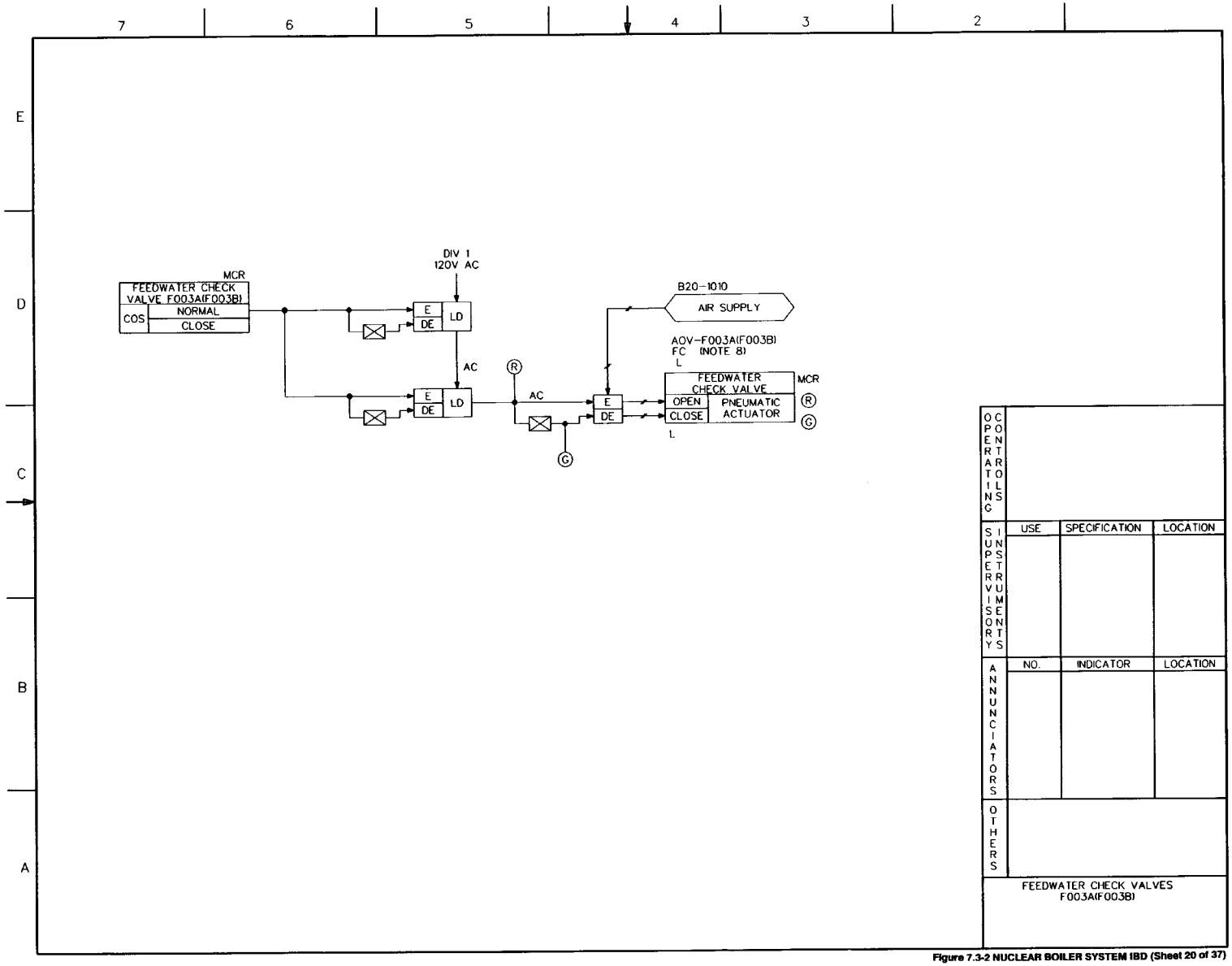

Figure 7.3-2 NUCLEAR BOILER SYSTEM IBD (Sheet 20 of 37)

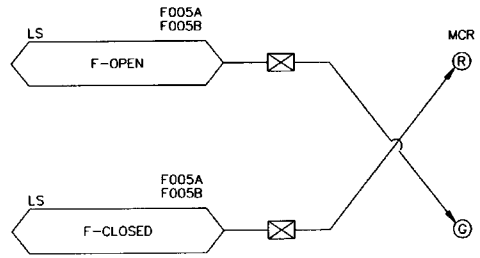

OPERATING CONTROLS			
SUPERVISORY INSTRUMENTS	USE	SPECIFICATION	LOCATION
ANNUNCIATORS	NO.	INDICATOR	LOCATION
OTHERS			

FEEDWATER GATE VALVES
F005A(F005B)

Figure 7.3-2 NUCLEAR BOILER SYSTEM IBD (Sheet 21 of 37)

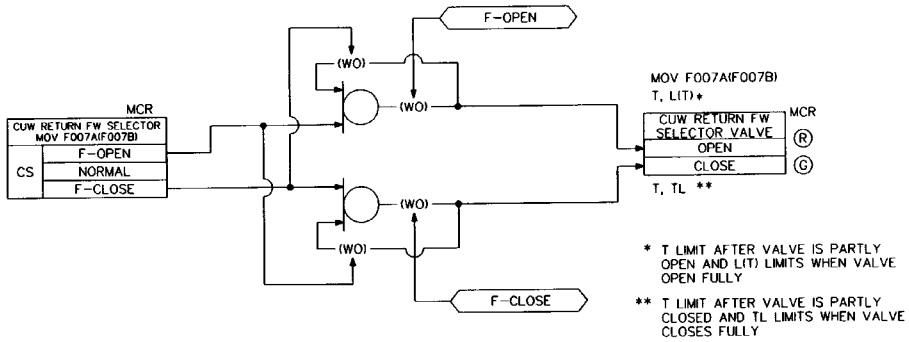

* T LIMIT AFTER VALVE IS PARTLY OPEN AND L(T) LIMITS WHEN VALVE OPEN FULLY

** T LIMIT AFTER VALVE IS PARTLY CLOSED AND TL LIMITS WHEN VALVE CLOSES FULLY

OPERATING CONTROLS			
SUPERVISORY INSTRUMENTS	USE	SPECIFICATION	LOCATION
ANNUNCIATORS	NO.	INDICATOR	LOCATION
OTHERS			

CUW RETURN FEEDWATER LOOP SELECTOR VALVES F007A(F007B)

Figure 7.3-2 NUCLEAR BOILER SYSTEM IBD (Sheet 22 of 37)

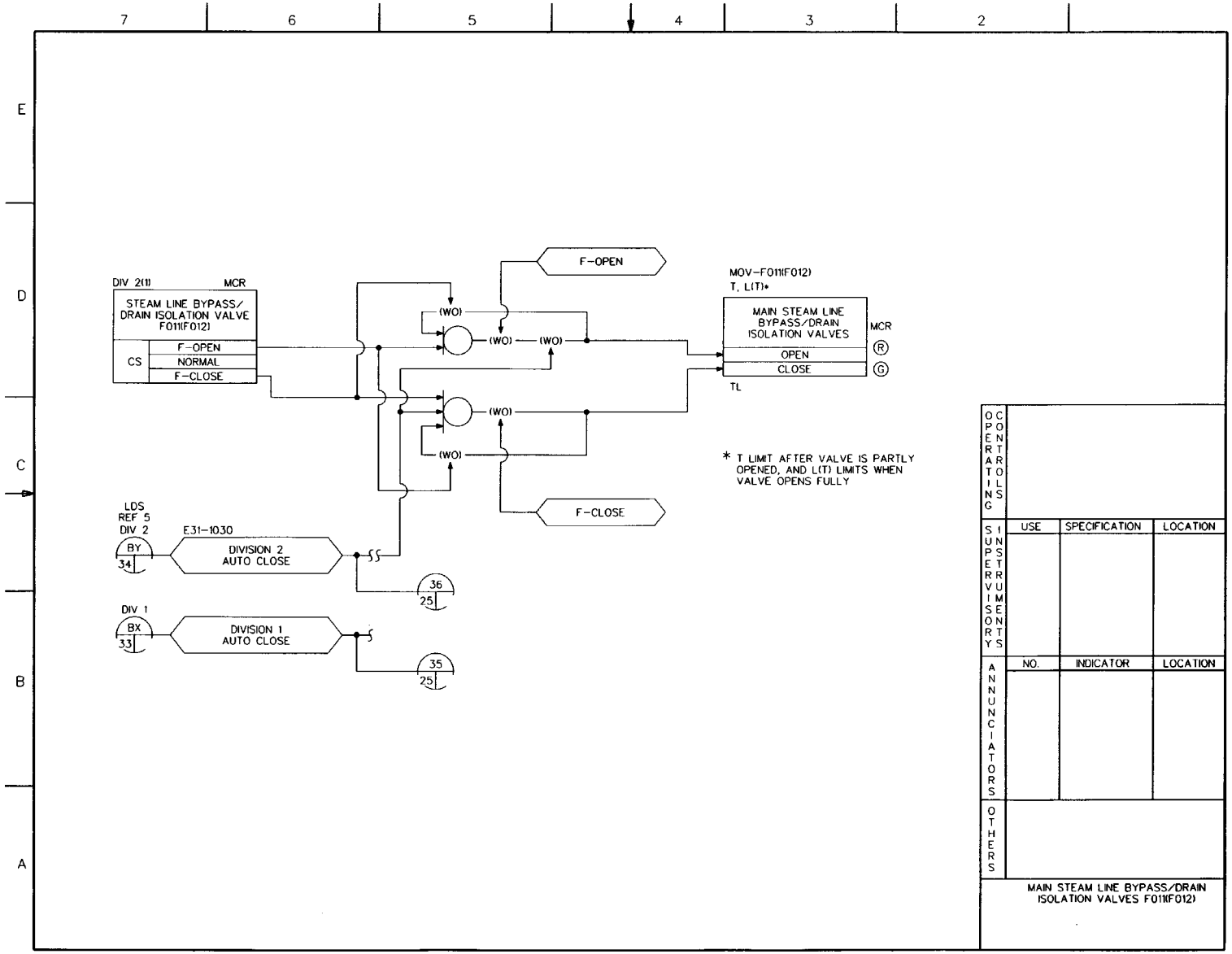

Figure 7.3-2 NUCLEAR BOILER SYSTEM IBD (Sheet 23 of 37)

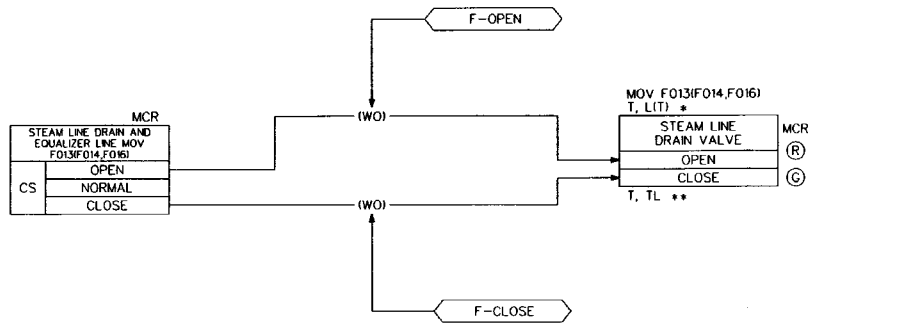

* T LIMIT AFTER VALVE IS PARTLY OPENED AND L(T) LIMITS WHEN VALVE OPENS FULLY

** T LIMIT AFTER VALVE IS PARTLY CLOSED AND TL LIMITS WHEN VALVE CLOSES FULLY

OPERATING CONTROLS			
SUPERVISORY INSTRUMENTS	USE	SPECIFICATION	LOCATION
ANNUNCIATORS	NO.	INDICATOR	LOCATION
OTHERS			

STEAM LINE DRAIN VALVES
F013(F014, F016)

Figure 7.3-2 NUCLEAR BOILER SYSTEM IBD (Sheet 24 of 37)

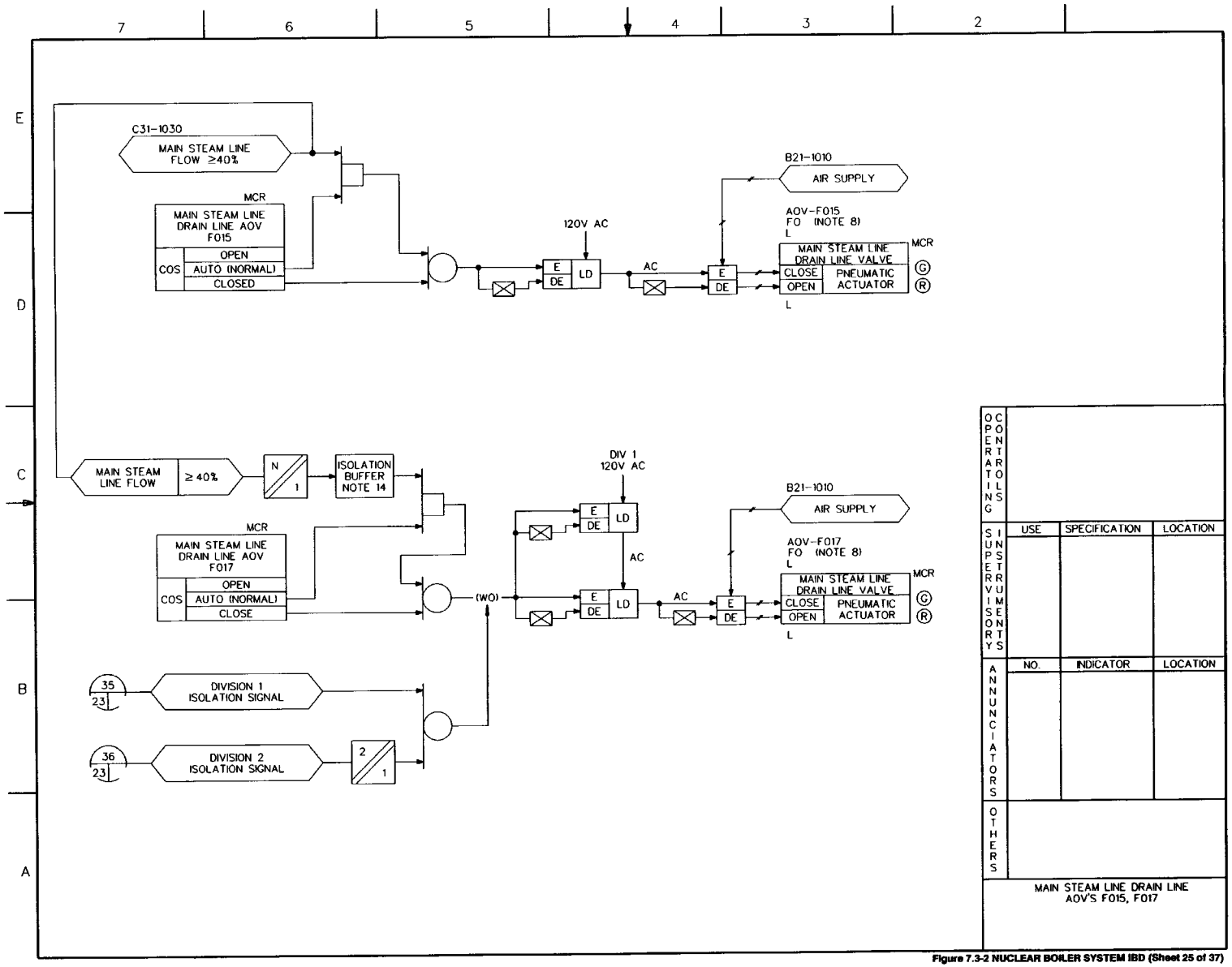

OPERATING CONTROLS			
SUPERVISORY INSTRUMENTS	USE	SPECIFICATION	LOCATION
ANNUNCIATORS	NO.	INDICATOR	LOCATION
OTHERS			

MAIN STEAM LINE DRAIN LINE AOV'S F015, F017

Figure 7.3-2 NUCLEAR BOILER SYSTEM IBD (Sheet 25 of 37)

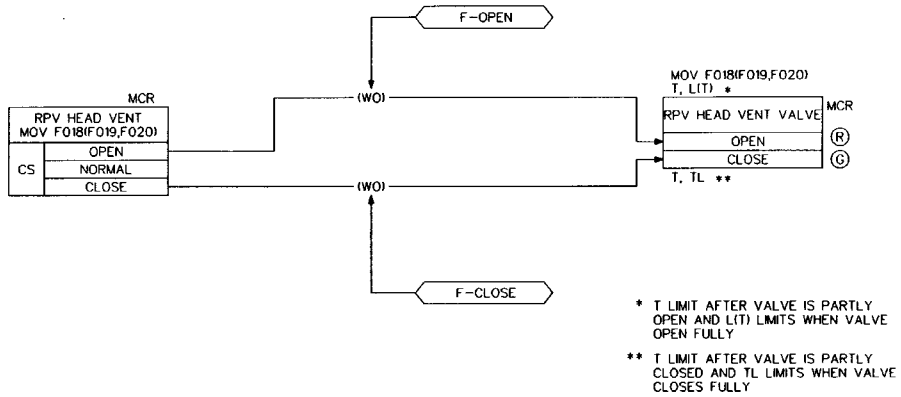

OPERATING CONTROLS			
SUPERVISORY INSTRUMENTS	USE	SPECIFICATION	LOCATION
ANNUNCIATORS	NO.	INDICATOR	LOCATION
OTHERS			

RPV HEAD VENT VALVES
F018(F019, F020)

Figure 7.3-2 NUCLEAR BOILER SYSTEM IBD (Sheet 26 of 37)

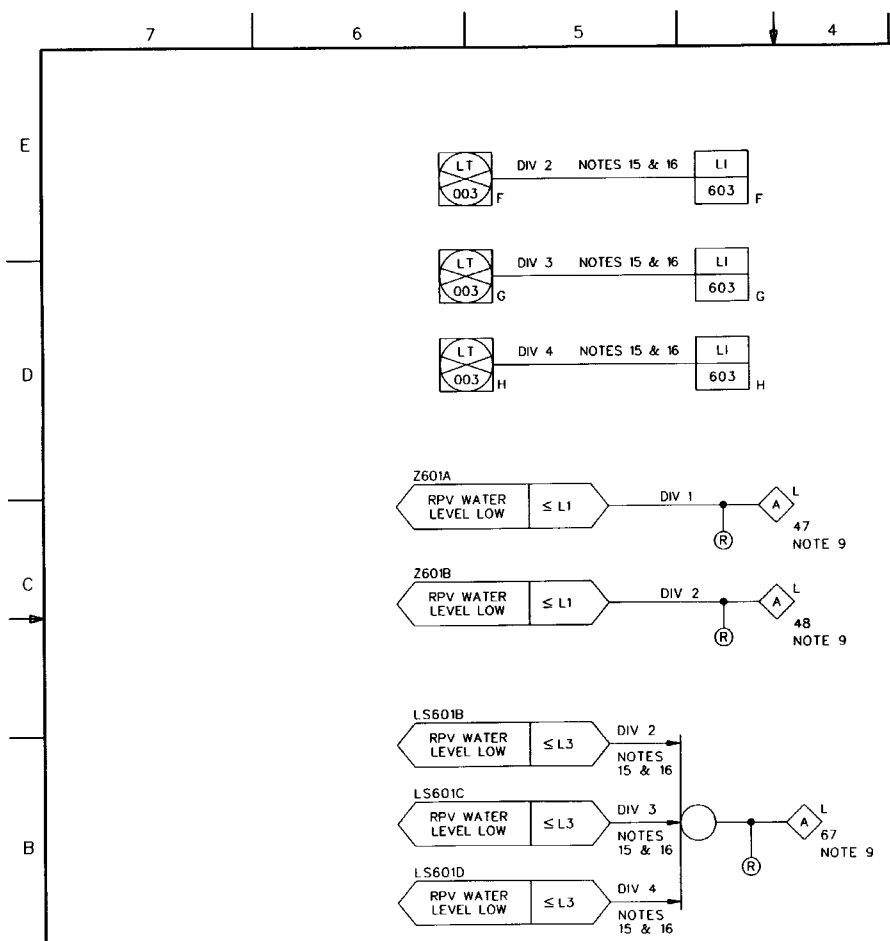

OPERATING CONTROLS			
SUPERVISORY INSTRUMENTS	USE	SPECIFICATION	LOCATION
ANNUNCIATORS	NO.	INDICATOR	LOCATION
OTHERS			

RPV WATER LEVEL ALARMS AND INDICATORS

Figure 7.3-2 NUCLEAR BOILER SYSTEM IBD (Sheet 27 of 37)

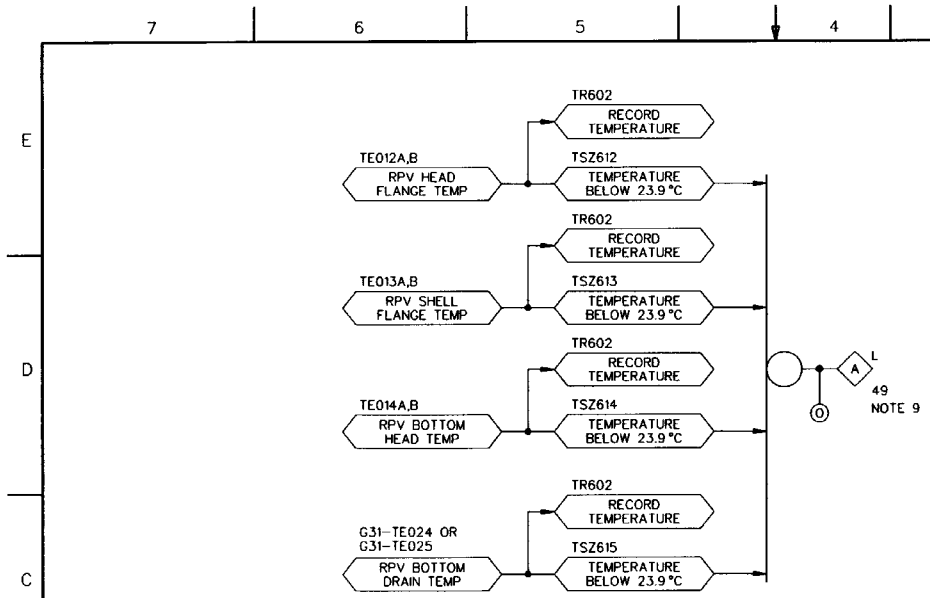

OPERATING CONTROLS			
SUPERVISORY INSTRUMENTS	USE	SPECIFICATION	LOCATION
ANNUNCIATORS	NO.	INDICATOR	LOCATION
OTHERS			

LOW RPV METAL AND BOTTOM DRAIN TEMPERATURE ALARM AND RECORDER

Figure 7.3-2 NUCLEAR BOILER SYSTEM IBD (Sheet 28 of 37)

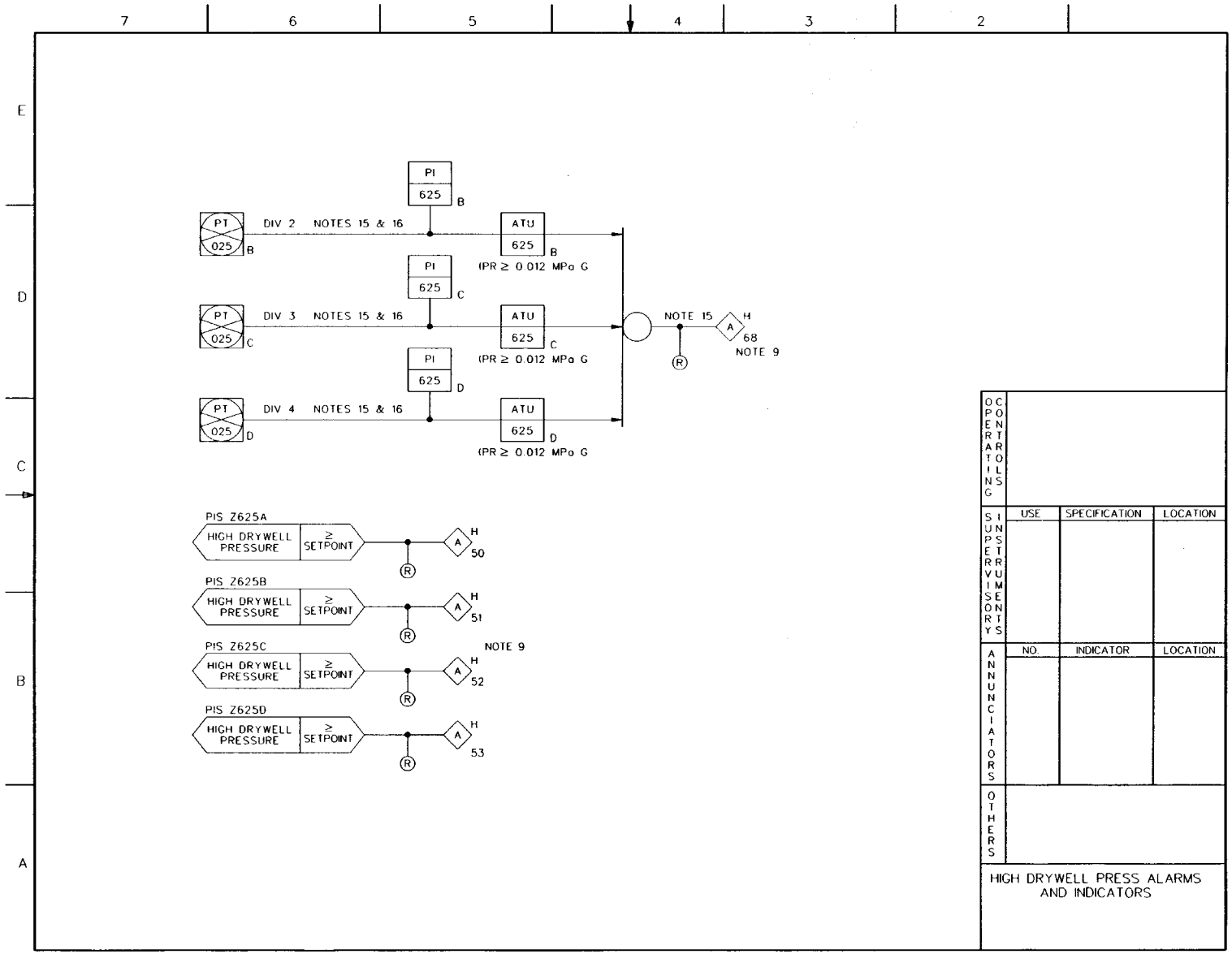

FIGURE 7.3-2 NUCLEAR BOILER SYSTEM IBD (Sheet 29 of 37)

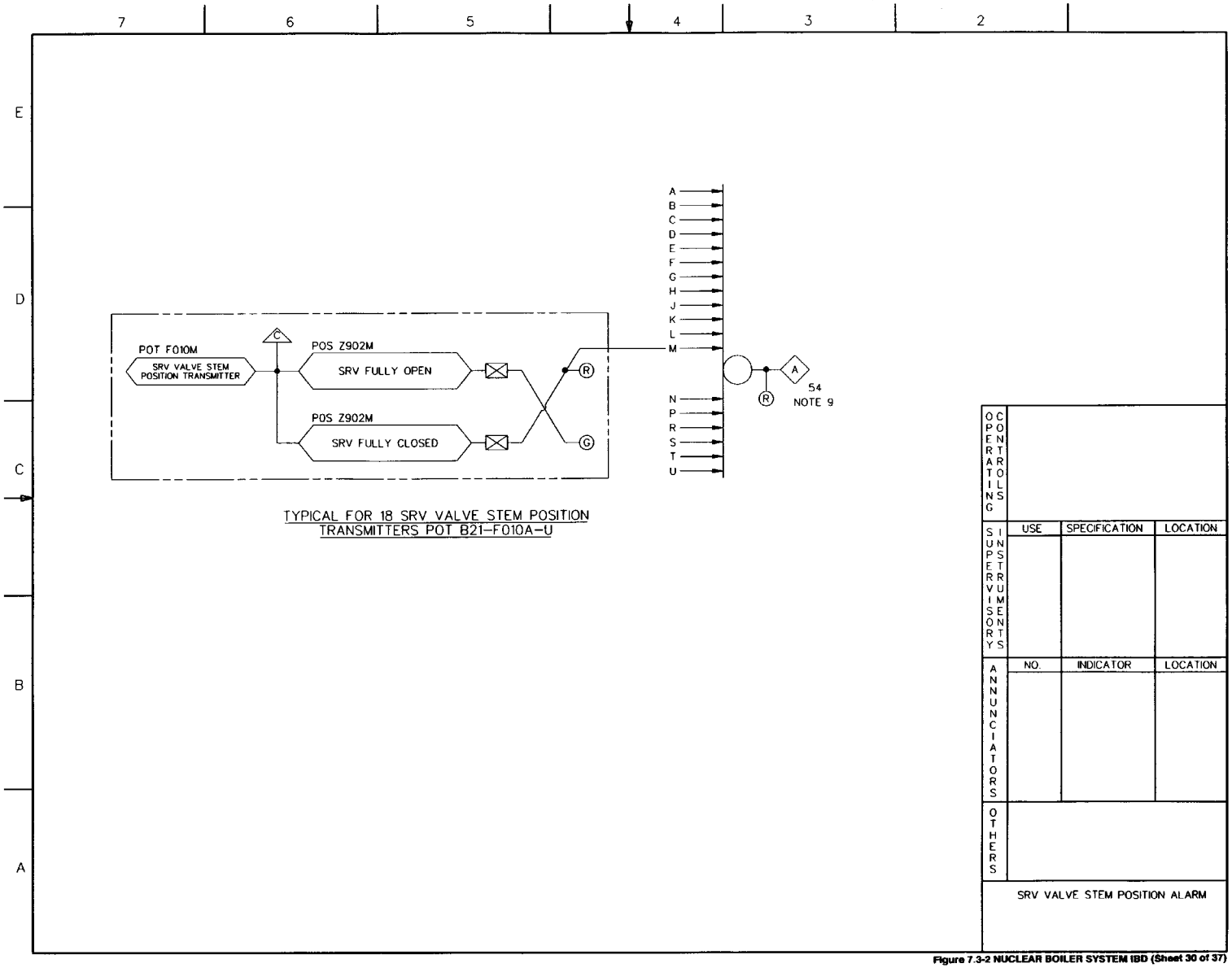

Figure 7.3-2 NUCLEAR BOILER SYSTEM I&D (Sheet 30 of 37)

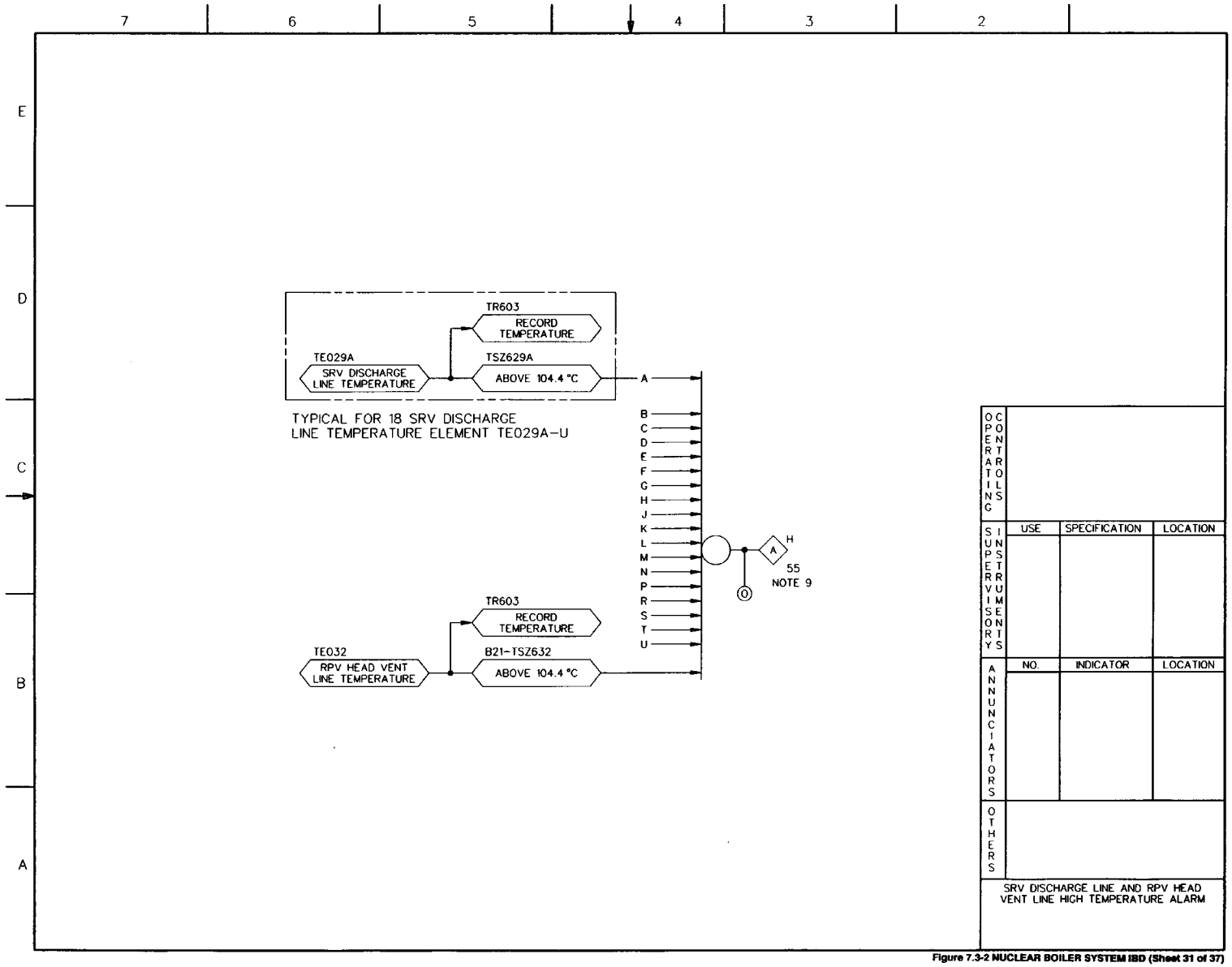

Figure 7.3-2 NUCLEAR BOILER SYSTEM IBD (Sheet 31 of 37)

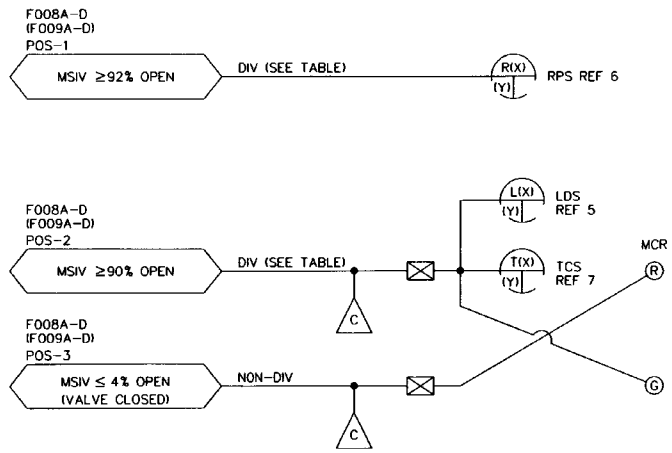

TABLE

VALVE NO.	POS–1	POS–2	REF (X)	REF SH NO. (Y)		
				RPS	LDS	TCS
F008A	DIV 1	DIV 1	A	16	24	
F008B	DIV 2	DIV 2	B	17	24	
F008C	DIV 3	DIV 3	C	18	24	
F008D	DIV 4	DIV 4	D	19	24	
F009A	DIV 1	DIV 1	E	16	24	
F009B	DIV 2	DIV 2	F	17	24	
F009C	DIV 3	DIV 3	G	18	24	
F009D	DIV 4	DIV 4	H	19	24	

OPERATING CONTROLS			
SUPERVISORY INSTRUMENTS	USE	SPECIFICATION	LOCATION
ANNUNCIATORS	NO.	INDICATOR	LOCATION
OTHERS			

MSIV VALVE STEM POSITION SWITCHES

Figure 7.3-2 NUCLEAR BOILER SYSTEM IBD (Sheet 32 of 37)

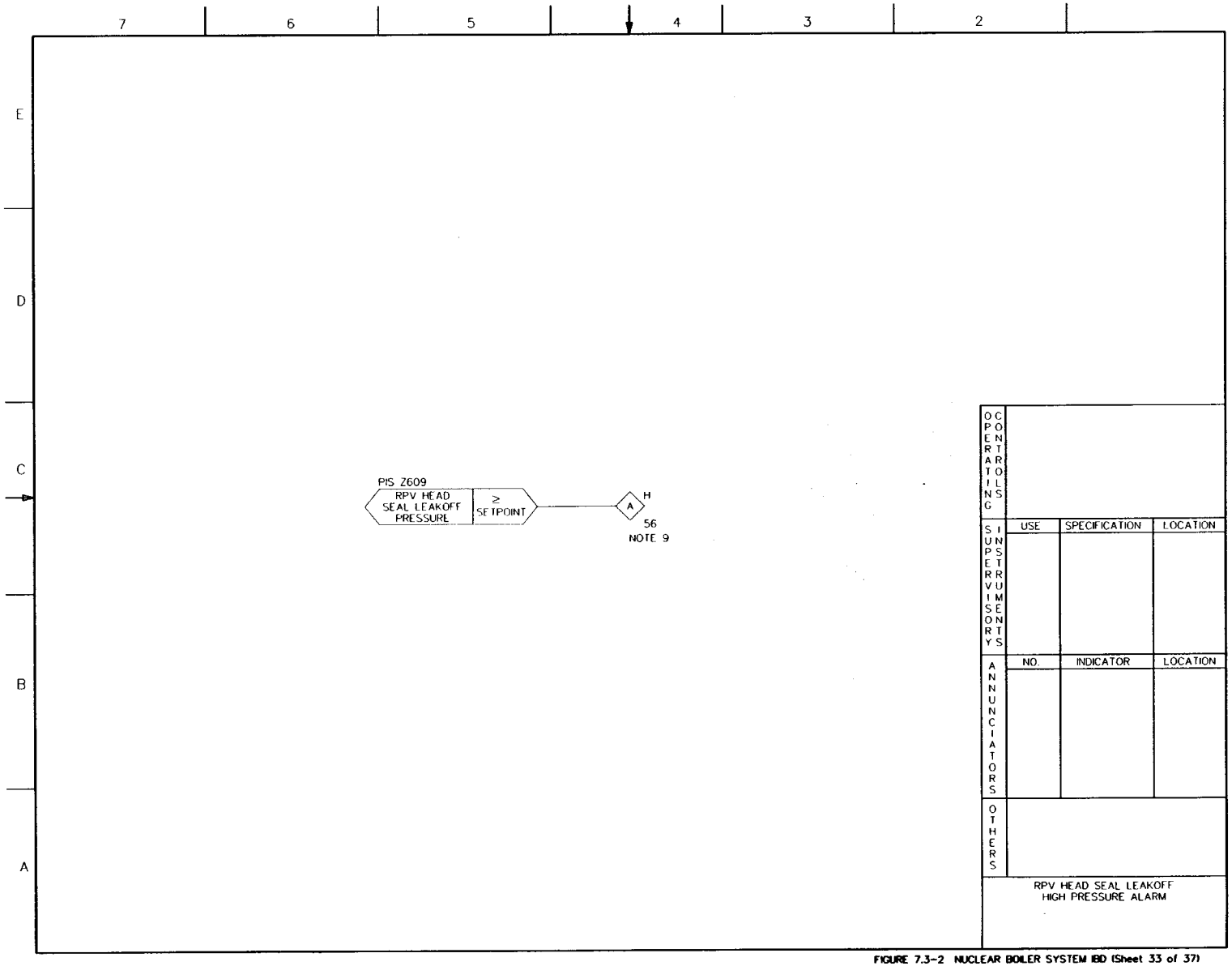

FIGURE 7.3-2 NUCLEAR BOILER SYSTEM IBD (Sheet 33 of 37)

TABLE 1: ANNUNCIATOR/ALARM LIGHTS – NOTE 10

ALARM NO.	INDICATION	FUNCTION	SOURCE OF SIGNAL
1	ALARM/RED LIGHT	HIGH REACTOR PRESSURE DIVISION 1	LOGIC OUTPUT FOR SRV B21-F010P SHEET 3
2	ALARM/RED LIGHT	HIGH REACTOR PRESSURE DIVISION 2	LOGIC OUTPUT FOR SRV B21-F010J SHEET 4
3	ALARM	ADS CHANNEL 1 ARMED DIVISION 1	LOGIC OUTPUT SHEET 11
4	ALARM	ADS CHANNEL 2 ARMED DIVISION 1	LOGIC OUTPUT SHEET 11
5	ALARM	ADS CHANNEL 1 TRIP DIVISION 1	LOGIC OUTPUT SHEET 11
6	ALARM	ADS CHANNEL 2 TRIP DIVISION 1	LOGIC OUTPUT SHEET 11
7	ALARM/ORANGE LIGHT	ADS INHIBIT SWITCH IN INHIBIT POSITION DIVISION 1	LOGIC OUTPUT SHEET 11
8	ALARM	ADS CHANNEL 1 MANUAL PERMISSIVE DIVISION 1	LOGIC OUTPUT SHEET 11
9	ALARM	ADS CHANNEL 2 MANUAL PERMISSIVE DIVISION 1	LOGIC OUTPUT SHEET 11
10	ALARM	ADS 29 SECOND TIMER RUNNING CHANNEL 1 DIVISION 1	LOGIC OUTPUT SHEET 14
11	ALARM	ADS 29 SECOND TIMER RUNNING CHANNEL 2 DIVISION 1	LOGIC OUTPUT SHEET 15
12	ALARM	ADS HIGH DRYWELL PRESSURE PERMISSIVE CHANNEL 1 DIV 1	LOGIC OUTPUT SHEET 14
13	ALARM	ADS HIGH DRYWELL PRESSURE PERMISSIVE CHANNEL 2 DIV 1	LOGIC OUTPUT SHEET 15
14	ALARM	ADS ECCS PUMP DISC PRESS PERMISSIVE CHANNEL 1 DIV 1	LOGIC OUTPUT SHEET 14
15	ALARM	ADS ECCS PUMP DISC PRESS PERMISSIVE CHANNEL 2 DIV 1	LOGIC OUTPUT SHEET 15
16	ALARM	ADS CHANNEL 1 ARMED DIVISION 2	LOGIC OUTPUT SHEET 11
17	ALARM	ADS CHANNEL 2 ARMED DIVISION 2	LOGIC OUTPUT SHEET 11
18	ALARM	ADS CHANNEL 1 TRIP DIVISION 2	LOGIC OUTPUT SHEET 11
19	ALARM	ADS CHANNEL 2 TRIP DIVISION 2	LOGIC OUTPUT SHEET 11
20	ALARM/ORANGE LIGHT	ADS INHIBIT SWITCH IN INHIBIT POSITION DIVISION 2	LOGIC OUTPUT SHEET 11
21	ALARM	ADS CHANNEL 1 MANUAL PERMISSIVE DIVISION 2	LOGIC OUTPUT SHEET 11
22	ALARM	ADS CHANNEL 2 MANUAL PERMISSIVE DIVISION 2	LOGIC OUTPUT SHEET 11
23	ALARM	ADS 29 SECOND TIMER RUNNING CHANNEL 1 DIVISION 2	LOGIC OUTPUT SHEET 14
24	ALARM	ADS 29 SECOND TIMER RUNNING CHANNEL 2 DIV 2	LOGIC OUTPUT SHEET 15
25	ALARM	ADS HIGH DRYWELL PRESS PERMISSIVE CHANNEL 1 DIV 2	LOGIC OUTPUT SHEET 14
26	ALARM	ADS HIGH DRYWELL PRESS PERMISSIVE CHANNEL 2 DIV 2	LOGIC OUTPUT SHEET 15
27	ALARM	ADS ECCS PUMP DISCH PRESS PERMISSIVE CHANNEL 1 DIV 2	LOGIC OUTPUT SHEET 14
28	ALARM	ADS ECCS PUMP DISCH PRESS PERMISSIVE CHANNEL 2 DIV 2	LOGIC OUTPUT SHEET 15
29	ALARM	SRV RELIEF "P" SWITCHED OFF	SWITCH OUTPUT SHEET 3

TABLE 1 (CONT)

ALARM NO.	INDICATION	FUNCTION	SOURCE OF SIGNAL
30	ALARM	SRV RELIEF "J" SWITCHED OFF	SWITCH OUTPUT SHEET 4
31	ALARM	SRV RELIEF "M" SWITCHED OFF	SWITCH OUTPUT SHEET 5
32	ALARM	SRV RELIEF "S" SWITCHED OFF	SWITCH OUTPUT SHEET 5
33	ALARM	SRV RELIEF "G" SWITCHED OFF	SWITCH OUTPUT SHEET 6
34	ALARM	SRV RELIEF "B" SWITCHED OFF	SWITCH OUTPUT SHEET 5
35	ALARM	SRV RELIEF "K" SWITCHED OFF	SWITCH OUTPUT SHEET 7
36	ALARM	SRV RELIEF "E" SWITCHED OFF	SWITCH OUTPUT SHEET 8
37	ALARM	SRV RELIEF "U" SWITCHED OFF	SWITCH OUTPUT SHEET 8
38	ALARM	SRV RELIEF "D" SWITCHED OFF	SWITCH OUTPUT SHEET 8
39	ALARM	SRV RELIEF "N" SWITCHED OFF	SWITCH OUTPUT SHEET 9
40	ALARM	SRV RELIEF "H" SIWTCHED OFF	SWITCH OUTPUT SHEET 9
41	ALARM	SRV RELIEF "T" SWITCHED OFF	SWITCH OUTPUT SHEET 9
42	ALARM	SRV RELIEF "C" SWITCHED OFF	SWITCH OUTPUT SHEET 9
43	ALARM	SRV RELIEF "L" SWITCHED OFF	SWITCH OUTPUT SHEET 10
44	ALARM	SRV RELIEF "F" SWITCHED OFF	SWITCH OUTPUT SHEET 10
45	ALARM	SRV RELIEF "R" SWITCHED OFF	SWITCH OUTPUT SHEET 10
46	ALARM	SRV RELIEF "A" SWITCHED OFF	SWITCH OUTPUT SHEET 10
47	ALARM/RED LIGHT	ENHANCED RPV WATER LEVEL LOW DIV 1	LOGIC OUTPUT SHEET 27
48	ALARM/RED LIGHT	ENHANCED RPV WATER LEVEL LOW DIV 2	LOGIC OUTPUT SHEET 27
49	ALARM/ORANGE LIGHT	LOW RPV METAL OR BOTTOM DRAIN TEMP	LOGIC OUTPUT SHEET 28
50	ALARM/RED LIGHT	HIGH DRYWELL PRESSURE DIVISION 1	LOGIC OUTPUT SHEET 29

ANNUNCIATOR LIST

Figure 7.3-2 NUCLEAR BOILER SYSTEM IBD (Sheet 34 of 37)

TABLE 1 (CONT)

ALARM NO.	INDICATION	FUNCTION	SOURCE OF SIGNAL
51	ALARM/RED LIGHT	HIGH DRYWELL PRESSURE DIVISION 2	LOGIC OUTPUT SHEET 29
52	ALARM/RED LIGHT	HIGH DRYWELL PRESSURE DIVISION 3	LOGIC OUTPUT SHEET 29
53	ALARM/RED LIGHT	HIGH DRYWELL PRESSURE DIVISION 4	LOGIC OUTPUT SHEET 29
54	ALARM/RED LIGHT	SRV VALVE(S) OPEN	LOGIC OUTPUT SHEET 30
55	ALARM/ORANGE LIGHT	SRV DISCHARGE LINE(S) OR RPV HEAD VENT HIGH TEMP	LOGIC OUTPUT SHEET 31
56	ALARM	RPV HEAD SEAL LEAKOFF HIGH PRESSURE	LOGIC OUTPUT SHEET 33
57	ALARM	ADS 8 MINUTE TIMER RUNNING, CHANNEL 1, DIVISION 1	LOGIC OUTPUT SHEET 14
58	ALARM	ADS 8 MINUTE TIMER RUNNING, CHANNEL 2, DIVISION 1	LOGIC OUTPUT SHEET 15
59	ALARM	ADS 8 MINUTE TIMER RUNNING, CHANNEL 1, DIVISION 2	LOGIC OUTPUT SHEET 14
60	ALARM	ADS 8 MINUTE TIMER RUNNING, CHANNEL 2, DIVISION 2	LOGIC OUTPUT SHEET 15
61	WHITE LIGHT	ATWS AUTOMATIC INHIBIT OF ADS INITIATION, CHANNEL 1, DIVISION 1	LOGIC OUTPUT SHEET 13
62	WHITE LIGHT	ATWS AUTOMATIC INHIBIT OF ADS INITIATION, CHANNEL 2, DIVISION 1	LOGIC OUTPUT SHEET 16
63	WHITE LIGHT	ATWS AUTOMATIC INHIBIT OF ADS INITIATION, CHANNEL 1, DIVISION 2	LOGIC OUTPUT SHEET 13
64	WHITE LIGHT	ATWS AUTOMATIC INHIBIT OF ADS INITIATION, CHANNEL 2, DIVISION 2	LOGIC OUTPUT SHEET 16
65	ALARM	ADS SRV SOLENOID(S) LOSS OF CONTINUITY DIVISION 1	LOGIC OUTPUT SHEET 18
66	ALARM	ADS SRV SOLENOID(S) LOSS OF CONTINUITY DIVISION 2	LOGIC OUTPUT SHEET 18
67	ALARM	RPV LOW WATER LEVEL 3 HARDWIRED	LOGIC OUTPUT SHEET 27
68	ALARM	HIGH DRYWELL PRESSURE HARDWIRED	LOGIC OUTPUT SHEET 29

ANNUNCIATOR LIST

FIGURE 7.3-2 NUCLEAR BOILER SYSTEM (BD (Sheet 35 of 37)

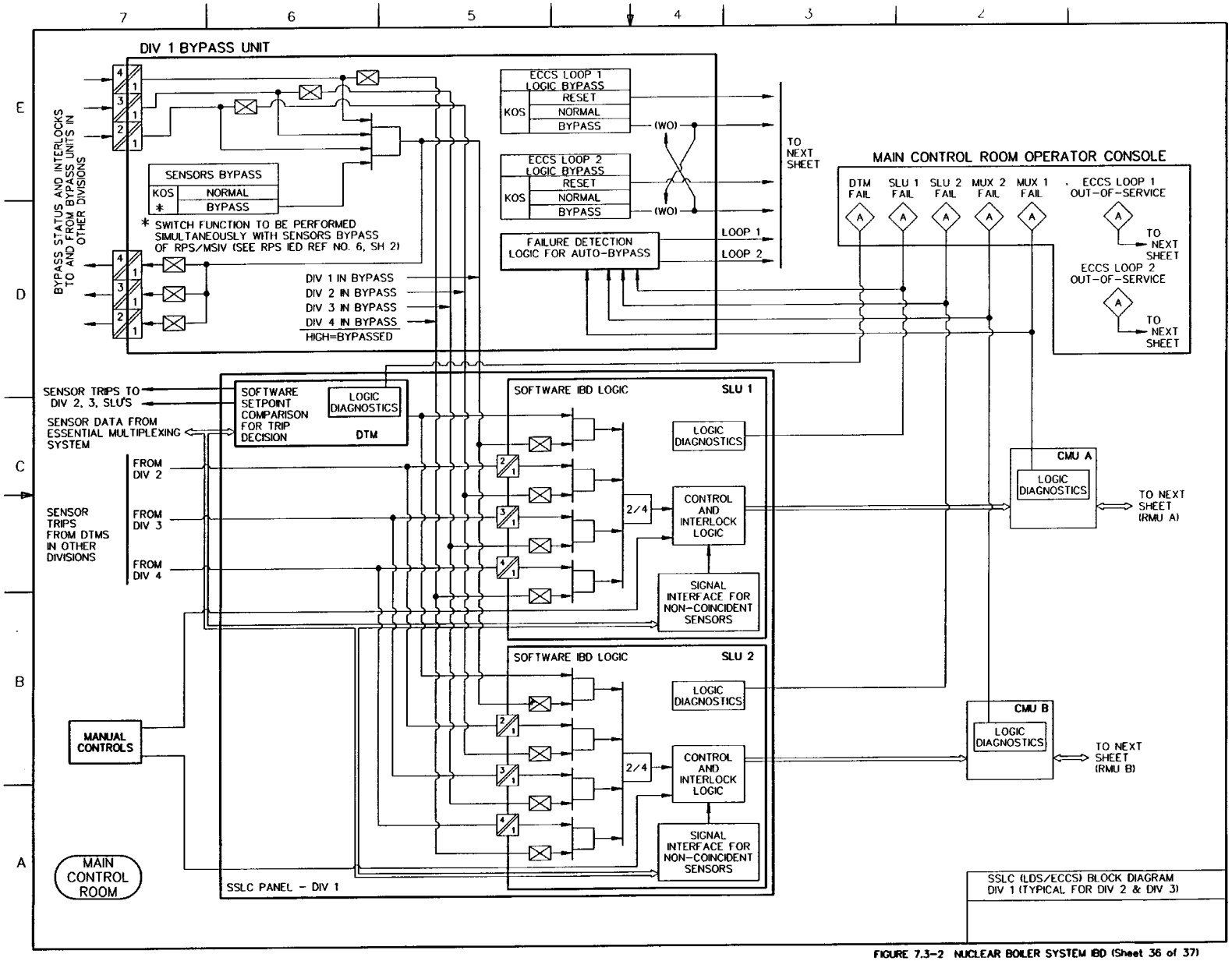

FIGURE 7.3-2 NUCLEAR BOILER SYSTEM IBD (Sheet 36 of 37)

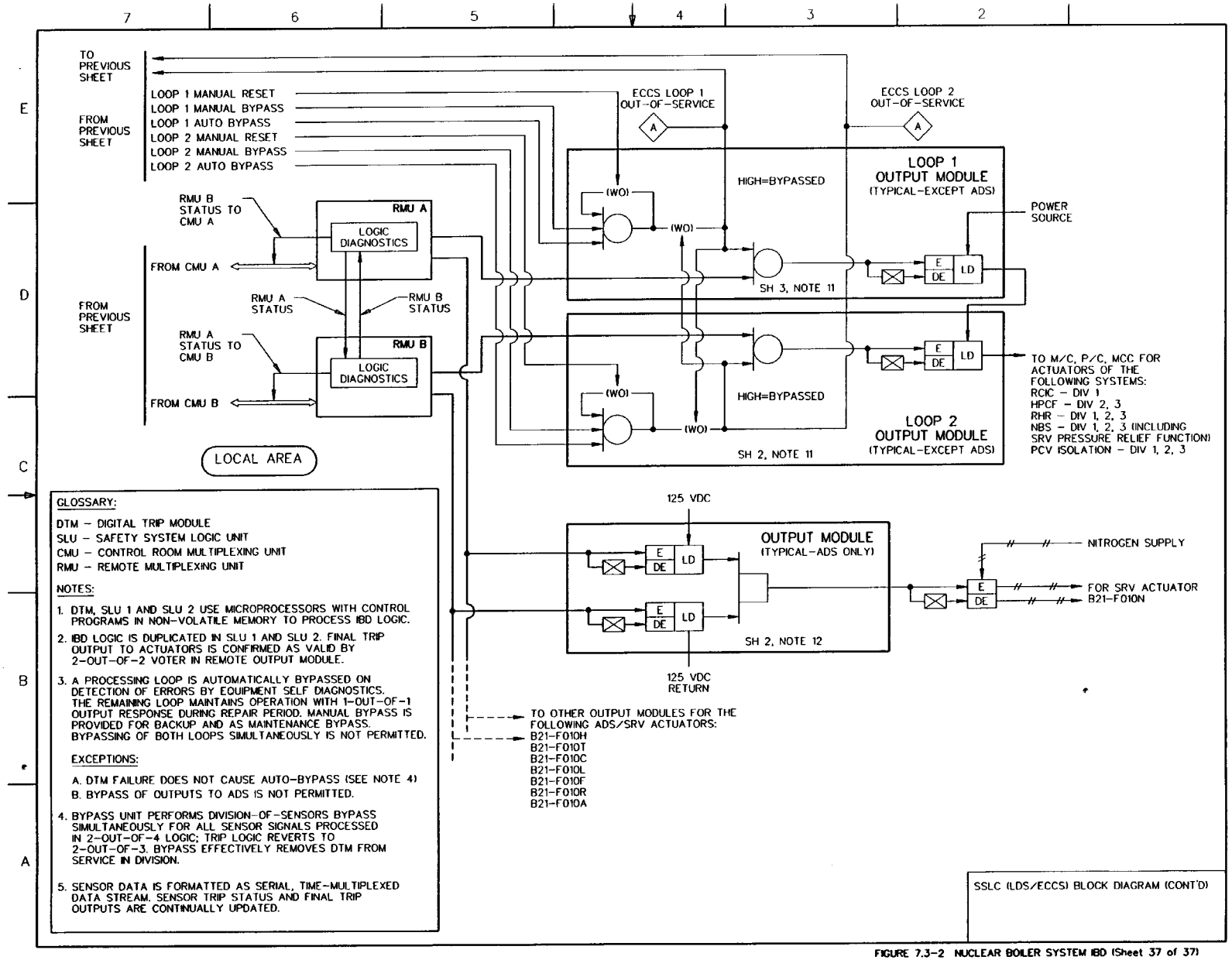

FIGURE 7.3-2 NUCLEAR BOILER SYSTEM IBD (Sheet 37 of 37)

NOTES:

1. ALL EQUIPMENT AND INSTRUMENT PREFIXED BY SYSTEM NO. E51- UNLESS OTHERWISE NOTED.
2. DIVISIONAL SIGNALS TO ANNUNCIATORS SHALL BE ISOLATED FROM NON-IE ALARM.
3. THE POWER TO CONTROL LOGIC AND TO THE MOTOR OPERATED F036 VALVE SHALL BE SUPPLIED FROM DIVISION 2 POWER.
4. THE LOGIC DESIGN SHALL INCORPORATE PROVISIONS TO REVERT 2/4 LOGIC TO 2/3 LOGIC DURING BYPASS OF A SINGLE DIVISION OF SENSORS. ALSO, THE LOGIC DESIGN SHALL NOT PERMIT THE BYPASS OF MORE THAN ONE DIVISION OF SENSORS AT A TIME.
5. SETPOINT VALUE IS NOT SUBJECT TO THE APPROVAL OF THIS DOCUMENT.
6. POWER SUPPLY SHALL BE DIVISION 1 UNLESS OTHERWISE SPECIFIED.
7. THE INBOARD CONTAINMENT ISOLATION VALVE F035 MANUAL CONTROL AND VALVE POSITION STATUS INDICATION (IN ADDITION TO BEING MULTIPLEXED) SHALL BE HARDWIRED TO THE MAIN CONTROL ROOM.

REFERENCE DOCUMENTS UNDER THE FOLLOWING IDENTITIES SHALL BE USED IN CONJUNCTION WITH THIS DRAWING.

	MPL NO.
1. MAKEUP WATER CONDENSATE SYSTEM IBD	P13-1030
2. RCIC SYSTEM P&ID	E51-1010
3. NUCLEAR BOILER SYSTEM P&ID	B21-1010
4. LEAK DETECTION & ISOLATION SYSTEM IBD	E31-1030
5. ATMOSPHERIC CONTROL SYSTEM IBD	T31-1030

SH NO.	TITLE
1	COVER/CONTENTS/NOTES
2	TABLE 1: ANNUNCIATOR/ALARM LIST
3	RCIC INITIATION LOGIC
4	RCIC AUTO SHUTDOWN
4	LEAK DETECTION ISOLATION
4	CONDENSATE PUMP DISCHARGE DRAIN VALVE F031
5	CONDENSATE PUMP DISCHARGE DRAIN VALVE F032
5	DRAIN POT SYSTEM ISOLATION VALVE F040
5	STEAM INLET TRAP BYPASS VALVE F058
5	DRAIN POT SYSTEM ISOLATION VALVE F041
6	TURBINE GOVERNOR VALVE
6	VACUUM PUMP
7	TESTABLE CHECK VALVE F005 AND EQUALIZING VALVE F026
7	CONDENSATE PUMP
8	INJECTION VALVE F004
8	MINIMUM FLOW BYPASS TO SUPPRESSION POOL VALVE F011
9	CONDENSATE STORAGE TANK SUCTION VALVE F001
9	SUPPRESSION POOL SUCTION VALVE F006
10	STEAM SUPPLY TO TURBINE VALVE F037
10	COOLING WATER SUPPLY VALVE F012
11	TEST BYPASS TO SUPPRESSION POOL VALVE F008
11	TEST BYPASS TO SUPPRESSION POOL VALVE F009

SH NO.	TITLE
12	STEAM SUPPLY LINE INBOARD ISOL VALVE F035
12	STEAM SUPPLY LINE OUTBOARD ISOL VALVE F036
12	TURBINE EXHAUST TO SUPPRESSION POOL VALVE F039
12	VACUUM PUMP DISCHARGE ISOL VALVE F047
13	STEAM LINE WARM UP VALVE F048
13	STEAM SUPPLY BYPASS VALVE F045
14	MOTOR OPERATED TURBINE TRIP & THROTTLE VALVE
15	THERMAL OVERLOAD RELAY BYPASS
15	TABLE 2: LIST OF EQUIPMENT WITH THERMAL OVERLOAD RELAY BYPASS
16	TURBINE EXHAUST DIAPHRAM HIGH PRESS ISOLATION
16	RCIC OUT-OF-SERVICE ALARM
17	MISCELLANEOUS ALARMS

MPL NO. E51-1030

FIGURE 7.3-3 REACTOR CORE ISOLATION COOLING SYSTEM IBD (Sheet 1 of 17)

TABLE 1: ANNUNCIATOR/ALARM LIST

INDICATOR	FUNCTION	INITIATING DEVICE
ALARMS	RCIC TURBINE GOVERNOR END BEARING OIL TEMP HIGH	TEMP SWITCH
	RCIC TURB COUP END BEARING OIL TEMP HIGH	TEMP SWITCH
	BAROMETRIC CONDENSER VACUUM TANK LOW LEVEL	LEVEL SWITCH
	BAROMETRIC CONDENSER VACUUM TANK HIGH LEVEL	LEVEL SWITCH
	RCIC TURBINE EXHAUST DIAPHRAGM PRESSURE HIGH	PIS-Z614A,E,B,F
	RCIC TURBINE EXHAUST LINE DISCHARGE PRESSURE HIGH	PIS-Z613A,E
	RCIC PUMP SUCTION PRESSURE HIGH	PIS-Z601
	RCIC PUMP SUCTION PRESSURE LOW	PIS-Z602
	RCIC AREA TEMP HIGH	E31-PS Z605A,B,C,D
	RCIC STEAM LINE FLOW HIGH	E31-FS Z606A,B,C,D
	RCIC STEAMLINE PRESSURE LOW	E31-PS Z607A,B,C,D
	RCIC ISOLATED	E31 LOGIC OUTPUT
	STEAM SUPPLY WARM-UP VALVE F048 NOT FULLY CLOSED	LIMIT SWITCH
	STEAM SUPPLY OUTBOARD ISOLATION VALVE F036 NOT FULLY OPENED	LIMIT SWITCH
	STEAM SUPPLY INBOARD ISOLATION VALVE F035 NOT FULLY OPENED	LIMIT SWITCH
	RCIC TURBINE EXHAUST VALVE F039 NOT FULLY OPENED	LIMIT SWITCH
	RCIC TURBINE INLET STEAM LINE WATER DRAIN POT LEVEL HIGH	LS011
	RCIC DISCHARGE LINE NOT FILLED	PIS-Z608
	CONDENSATE STORAGE TANK TO SUPPRESSION POOL SUCTION AUTO TRANSFER OVERRIDE	KOS
	ANY PUMP MOTOR OVERLOAD OR POWER LOSS	MCC
	SUPPRESSION POOL WATER TEMPERATURE HIGH	TIS-Z604

TABLE 1 (CONT'D) ANNUNCIATOR/ALARM LIST

INDICATOR	FUNCTION	INITIATING DEVICE
ALARMS	OIL FILTER DIFFERENTIAL PRESSURE HIGH	DP SWITCH
	RCIC MANUAL INITIATION SWITCH IN ARMED POSITION	PBS
	RCIC OUT OF SERVICE	COS LOGIC OUTPUT
	RCIC TURBINE BEARING OIL PRESSURE LOW	PRESSURE SWITCH
	VACUUM TANK PRESSURE HIGH	PRESSURE SWITCH
	RCIC LOW FLOW	FIS-Z607
	RCIC LUBE OIL AFTER COOLER TEMP HIGH	TEMP SWITCH
	VACUUM PUMP DISCHARGE ISOLATION VALVE F047 NOT FULLY OPENED	LIMIT SWITCH
	RCIC TURBINE TRIP AND THROTTLE VALVE NOT FULLY OPENED	LIMIT SWITCH
	SUPPRESSION POOL WATER LEVEL HIGH	LOGIC OUTPUT
	CONDENSATE STORAGE TANK WATER LEVEL LOW	LOGIC OUTPUT
	RCIC TEST	COS
	RPV WATER LEVEL LOW (L2)	LOGIC OUTPUT
	DRYWELL PRESSURE HIGH	LOGIC OUTPUT
	RCIC INITIATION SIGNAL	LOGIC OUTPUT
	RPV WATER LEVEL HIGH (L8)	LOGIC OUTPUT
	ANY RCIC VALVE OVERLOAD OR POWER LOSS	MCC
	RCIC LOGIC POWER FAILURE	LOGIC OUTPUT
	STEAM SUPPLY TO TURBINE VALVE F037 CLOSED ON HIGH WATER LEVEL (L8)	LIMIT SWITCH, LOGIC OUTPUT
	THERMAL OVERLOAD RELAY BYPASS CONTROL SWITCH IN "TEST"	KOS

Figure 7 3-3 REACTOR CORE ISOLATION COOLING SYSTEM IBD (Sheet 2 of 17)

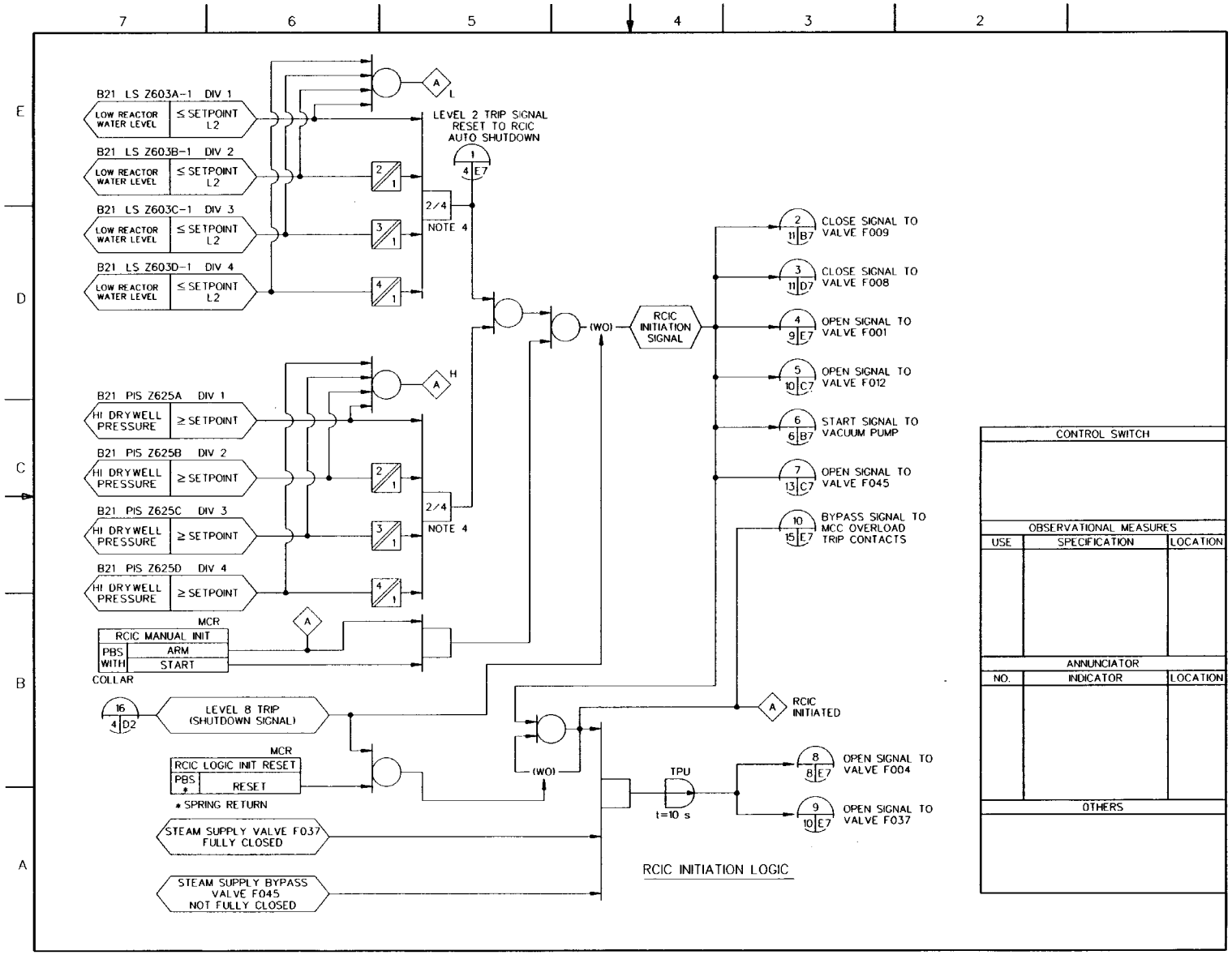

FIGURE 7.3-3 REACTOR CORE ISOLATION COOLING SYSTEM I&D (Sheet 3 of 17)

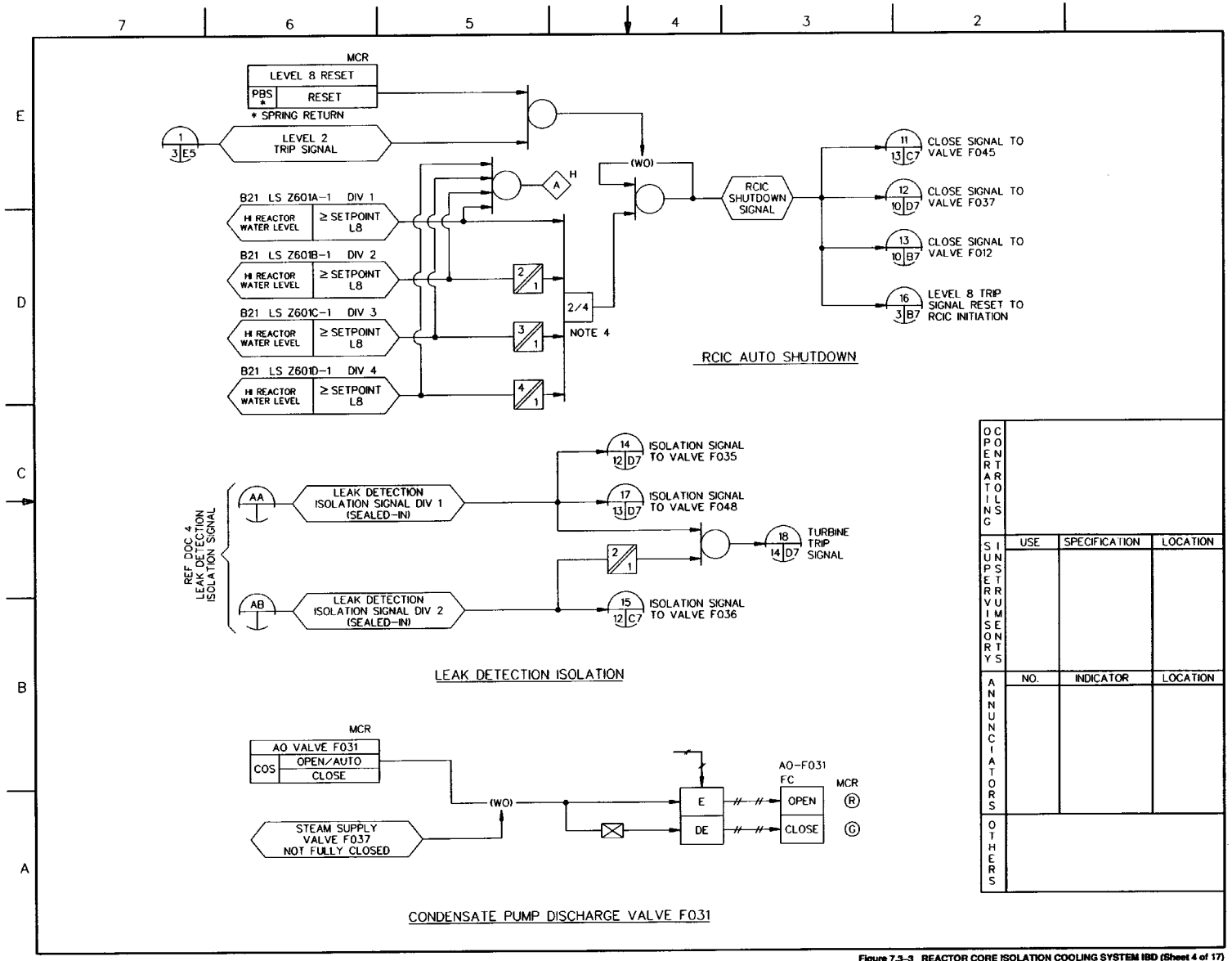

OPERATING CONTROLS			
SUPERVISORY INSTRUMENTS	USE	SPECIFICATION	LOCATION
ANNUNCIATORS	NO.	INDICATOR	LOCATION
OTHERS			

Figure 7.3-3 REACTOR CORE ISOLATION COOLING SYSTEM IBD (Sheet 4 of 17)

21-195

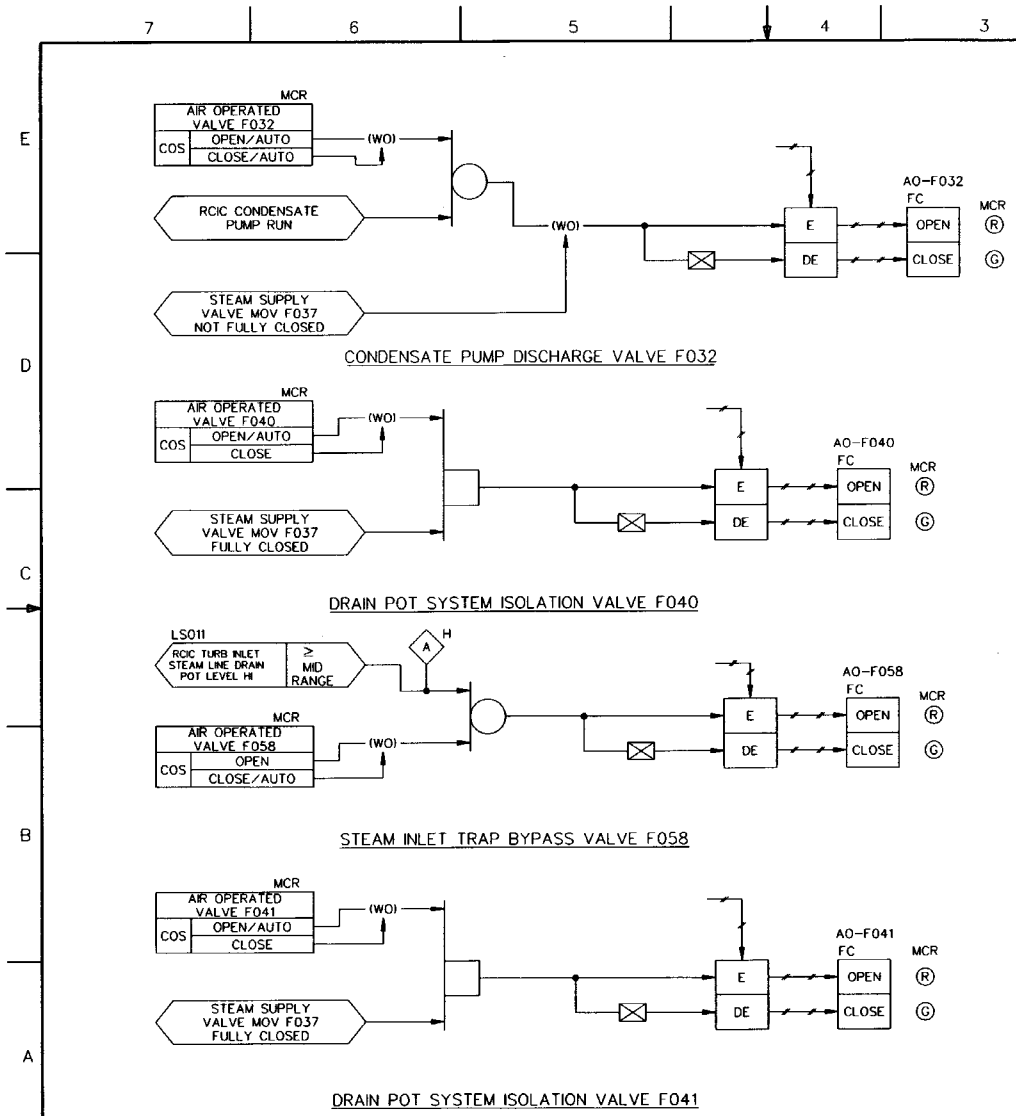

OPERATING CONTROLS			
SUPERVISORY INSTRUMENTS	USE	SPECIFICATION	LOCATION
ANNUNCIATORS	NO.	INDICATOR	LOCATION
OTHERS			

Figure 7.3-3 REACTOR CORE ISOLATION COOLING SYSTEM IBD (Sheet 5 of 17)

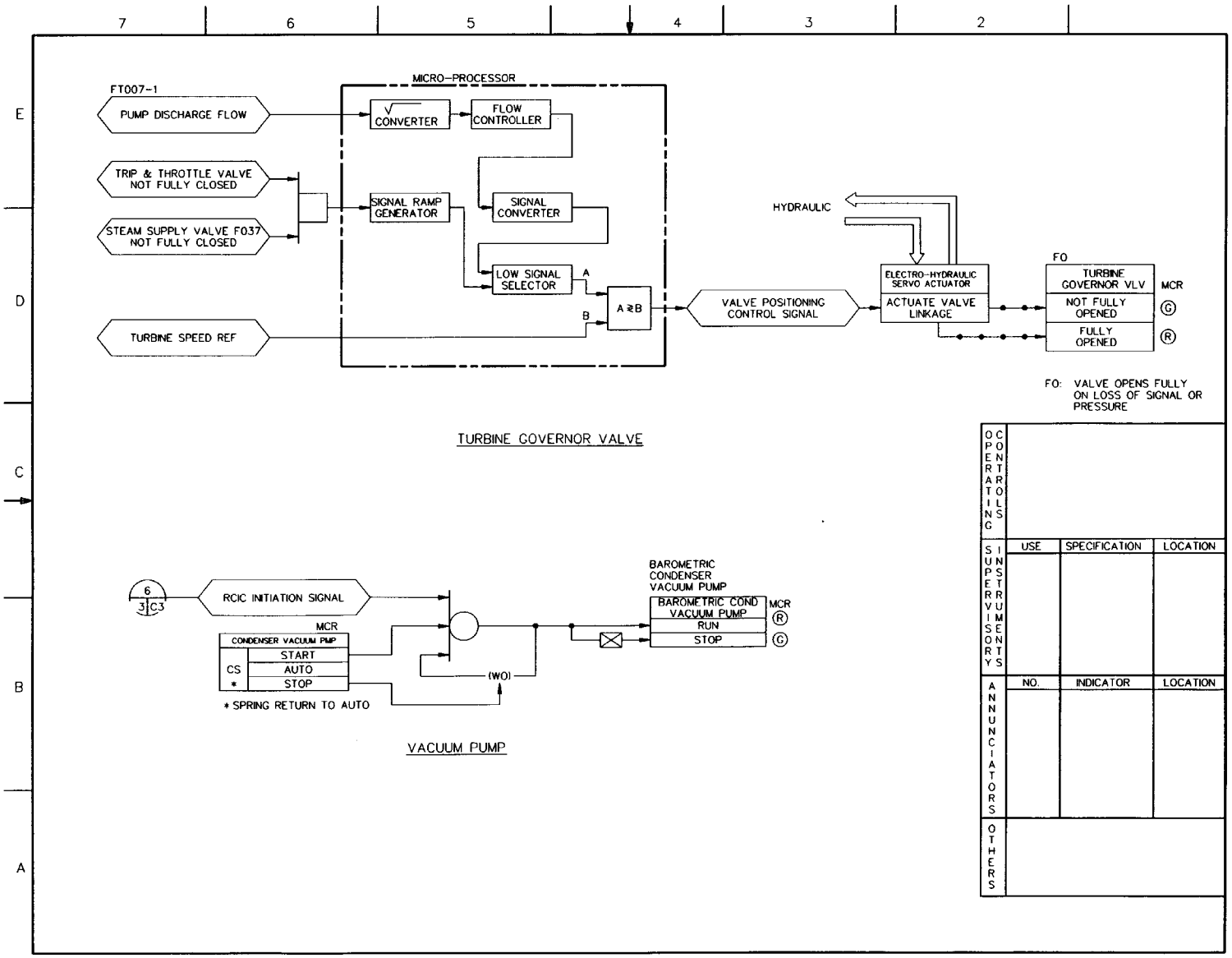

Figure 7.3-3 REACTOR CORE ISOLATION COOLING SYSTEM IBD (Sheet 5 of 17)

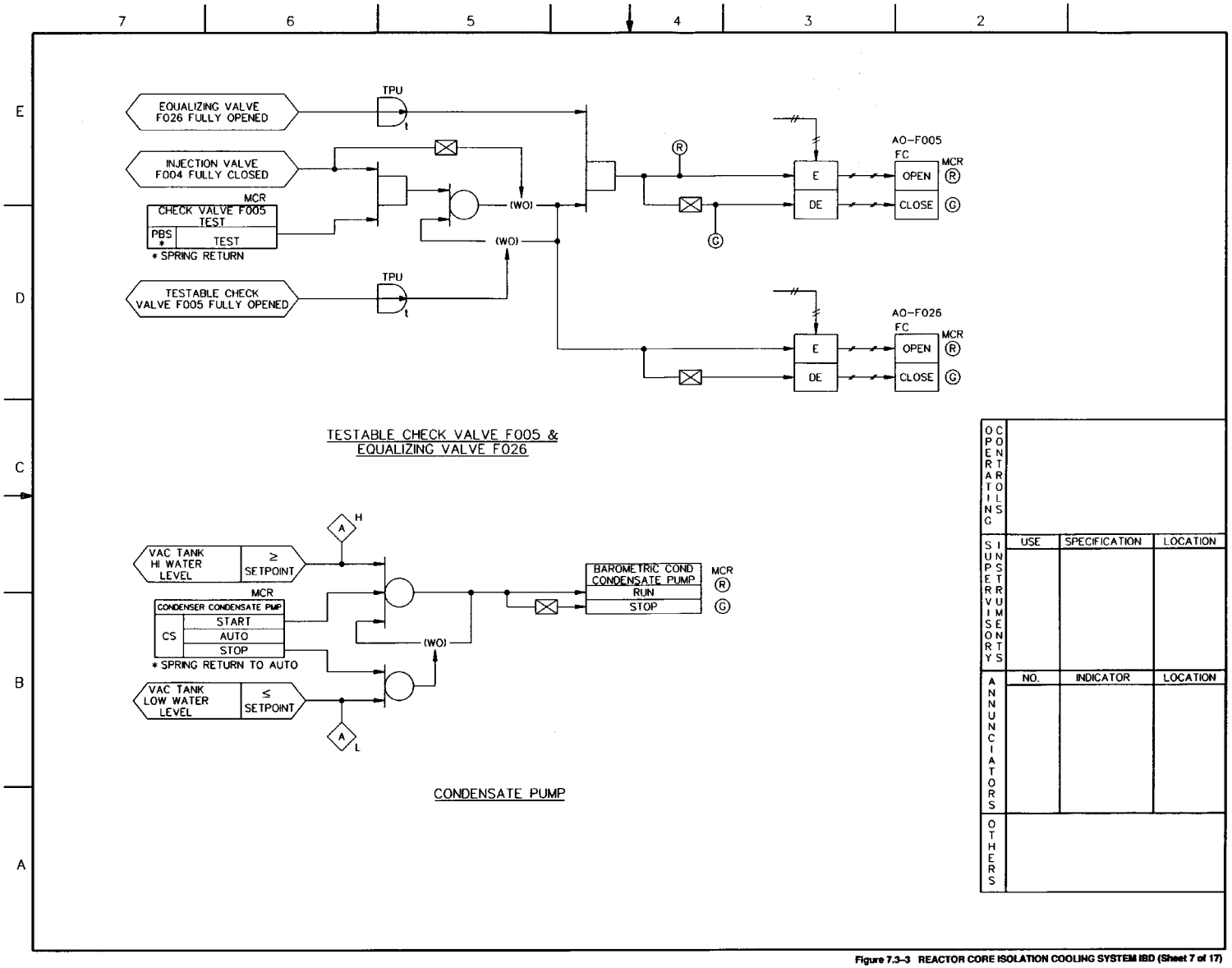

Figure 7.3-3 REACTOR CORE ISOLATION COOLING SYSTEM IBD (Sheet 7 of 17)

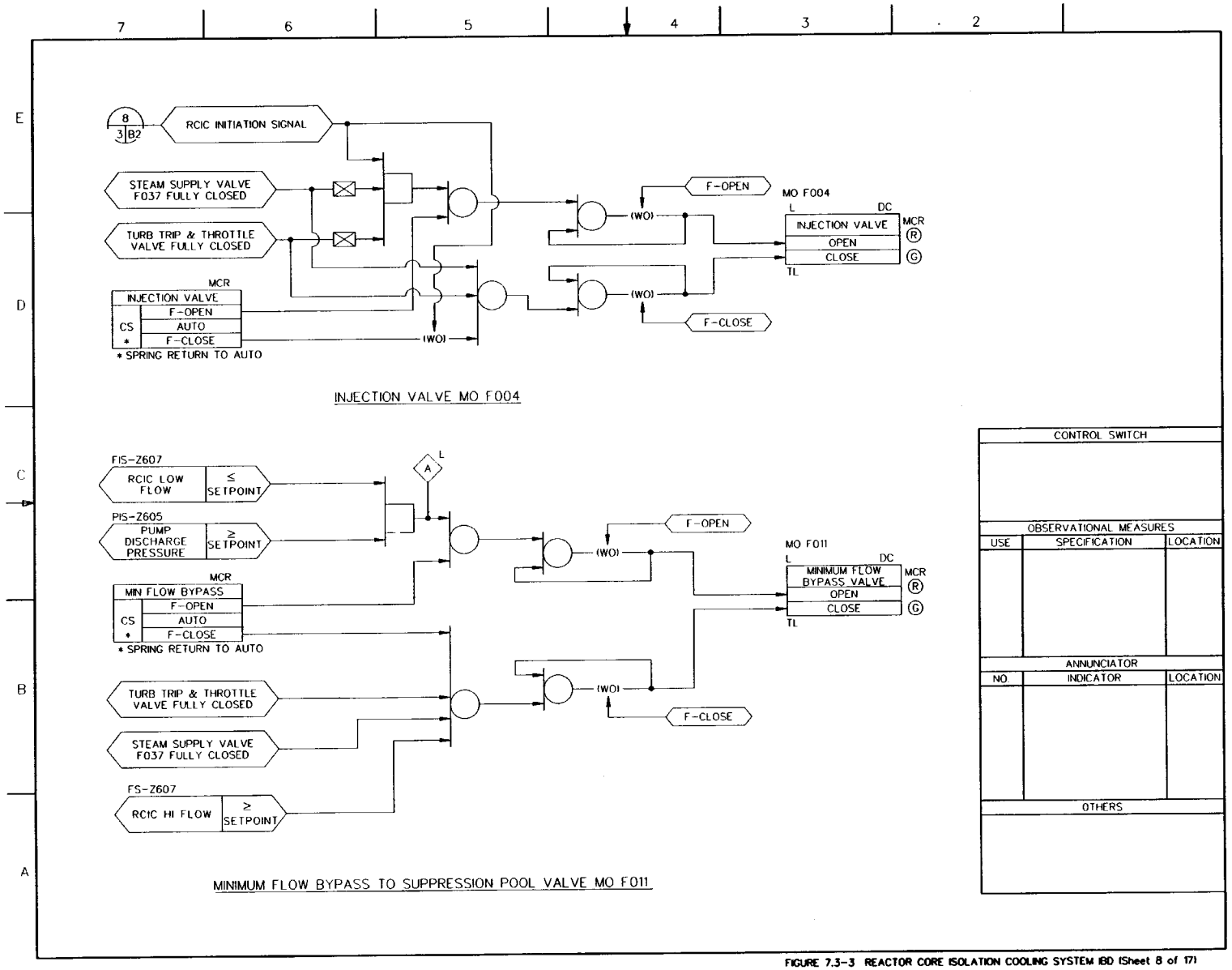

FIGURE 7.3-3 REACTOR CORE ISOLATION COOLING SYSTEM (BD (Sheet 8 of 17)

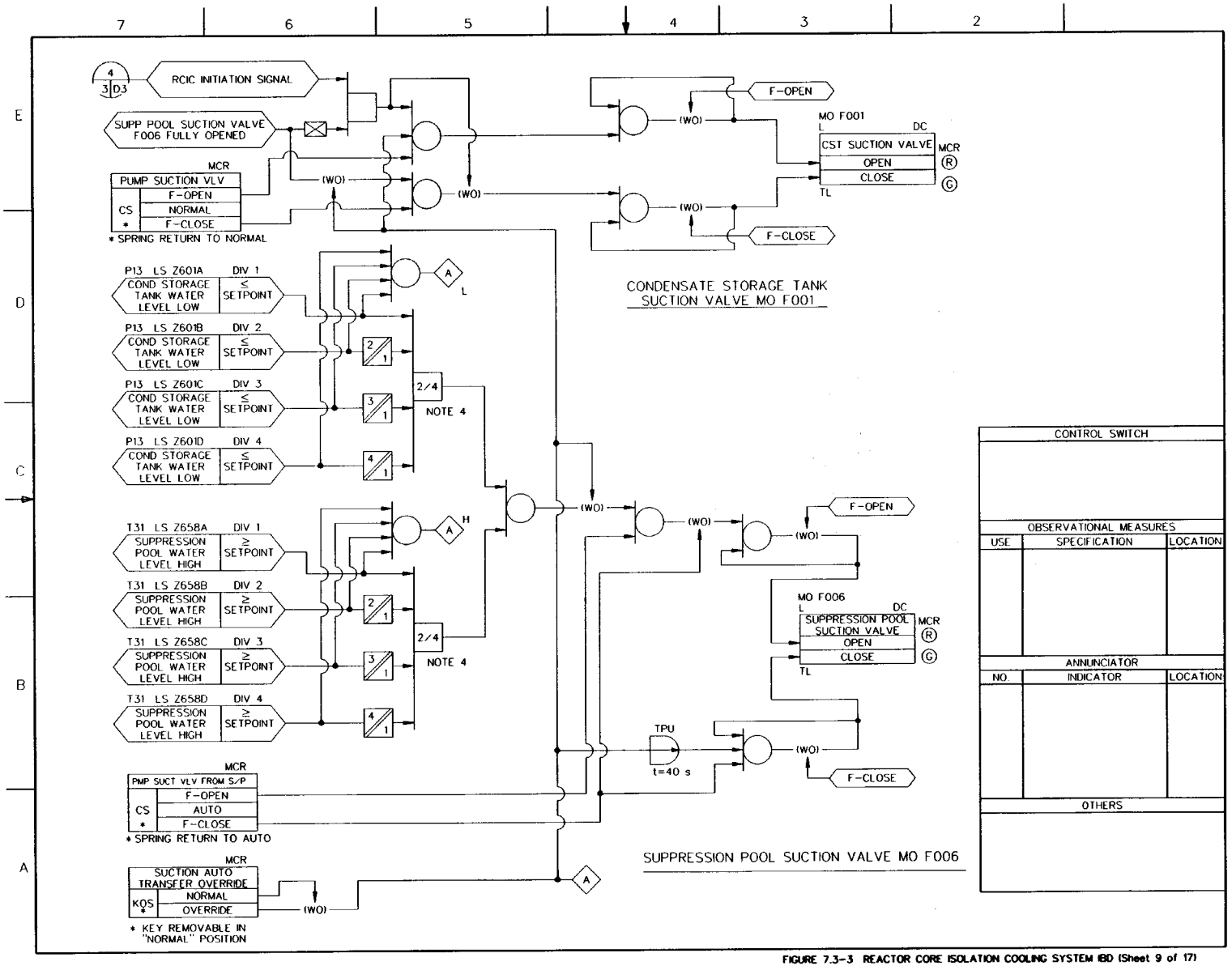

FIGURE 7.3-3 REACTOR CORE ISOLATION COOLING SYSTEM IBD (Sheet 9 of 17)

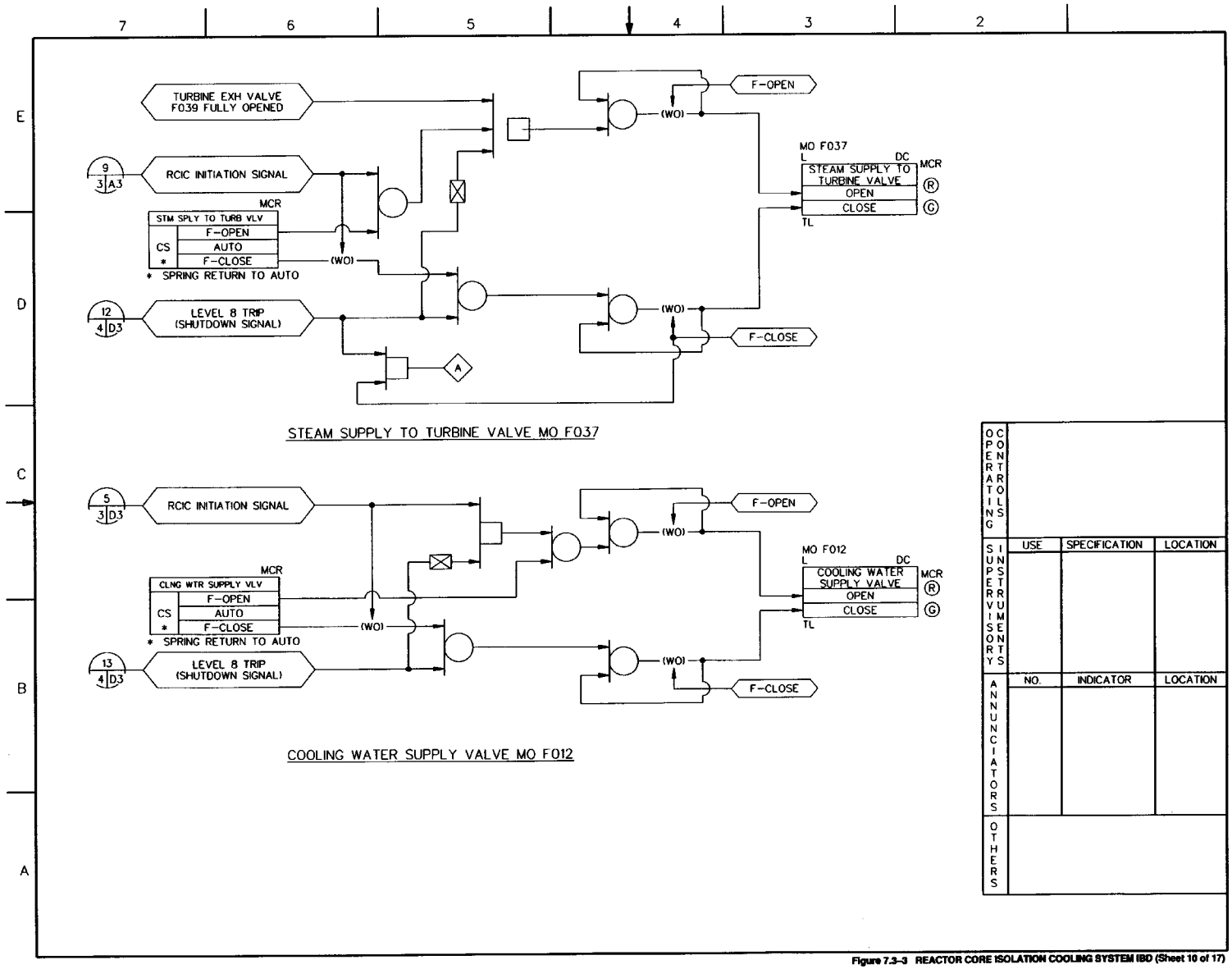

Figure 7.3-3 REACTOR CORE ISOLATION COOLING SYSTEM IBD (Sheet 10 of 17)

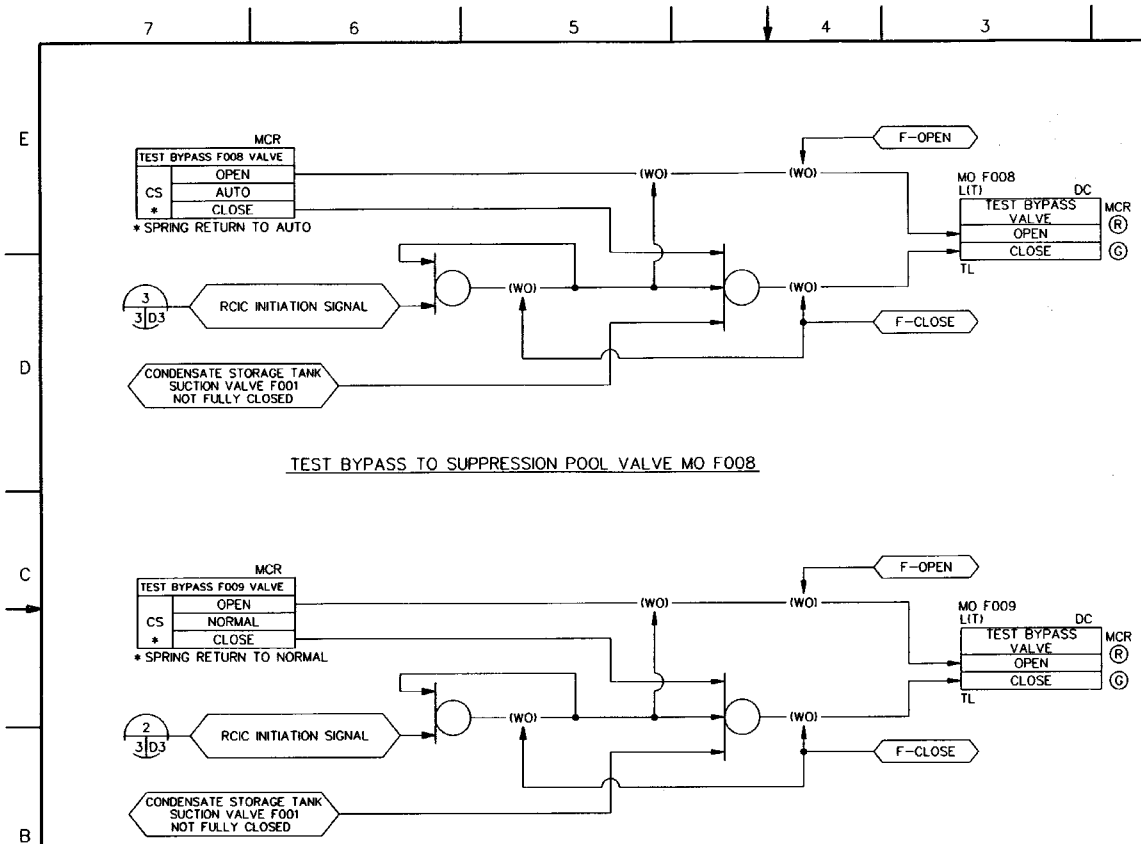

OPERATING CONTROLS			
SUPERVISORY INSTRUMENTS	USE	SPECIFICATION	LOCATION
ANNUNCIATORS	NO.	INDICATOR	LOCATION
OTHERS			

Figure 7.3-3 REACTOR CORE ISOLATION COOLING SYSTEM IBD (Sheet 11 of 17)

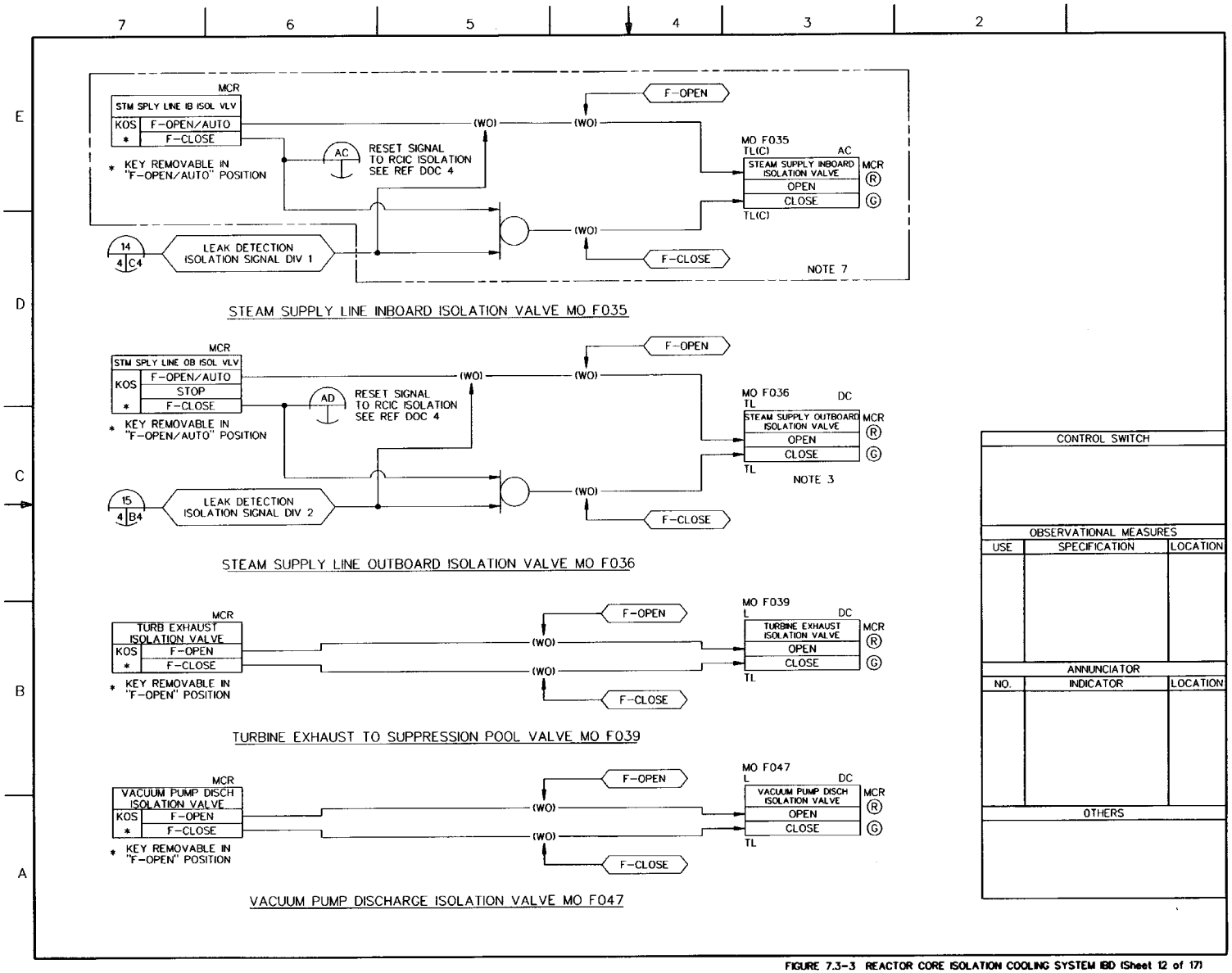

FIGURE 7.3-3 REACTOR CORE ISOLATION COOLING SYSTEM IBD (Sheet 12 of 17)

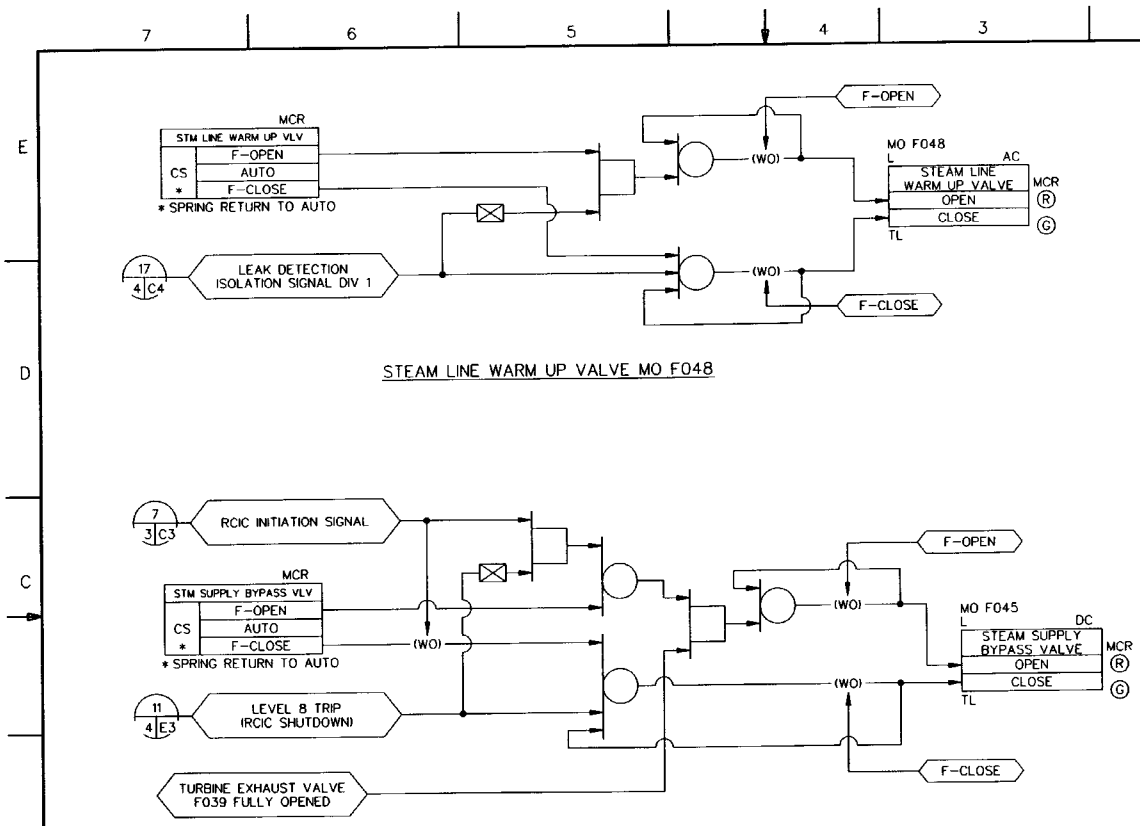

OPERATING CONTROLS			
SUPERVISORY INSTRUMENTS	USE	SPECIFICATION	LOCATION
ANNUNCIATORS	NO.	INDICATOR	LOCATION
OTHERS			

Figure 7.3-3 REACTOR CORE ISOLATION COOLING SYSTEM IBD (Sheet 13 of 17)

21-264

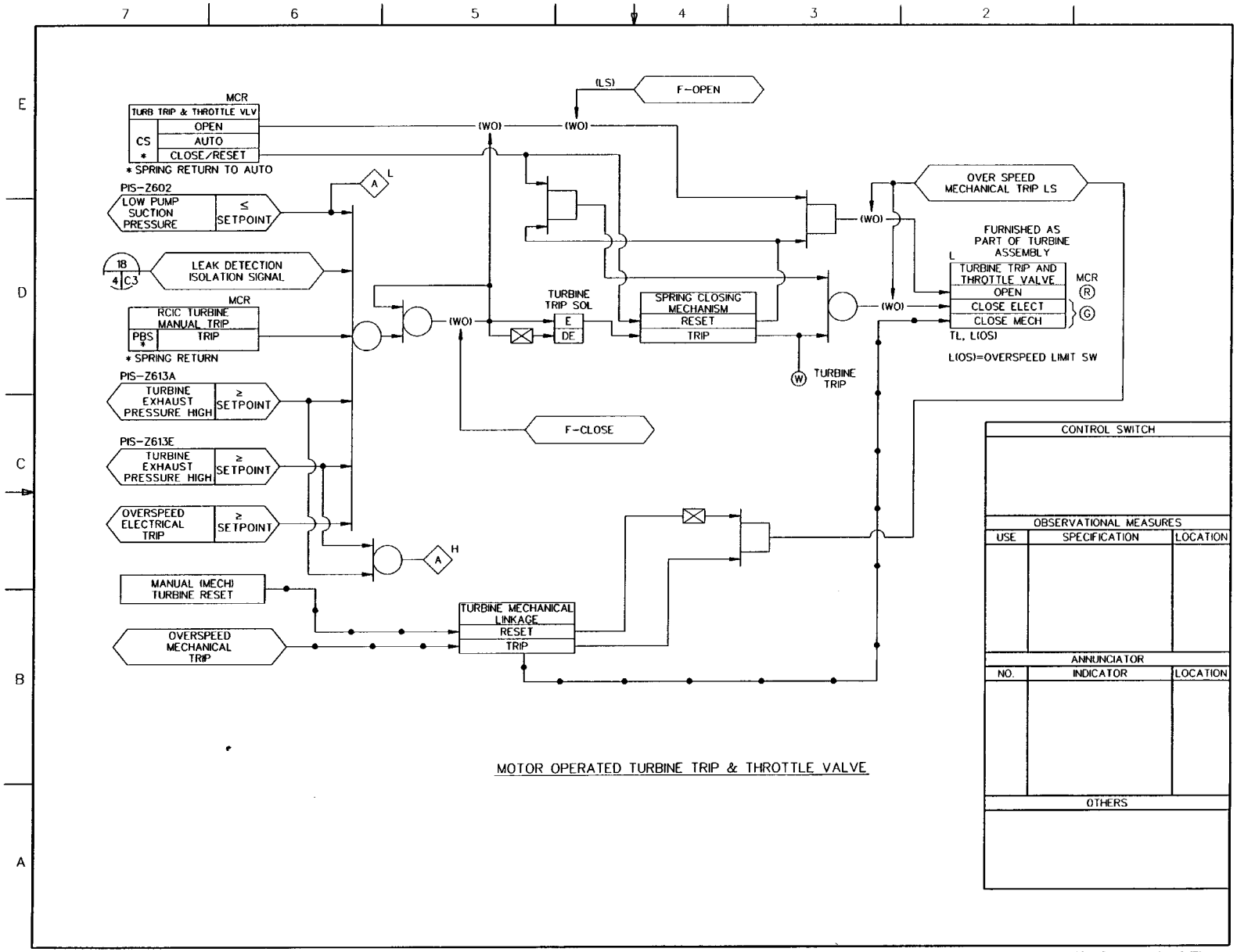

FIGURE 7.3-3 REACTOR CORE ISOLATION COOLING SYSTEM IBD (Sheet 14 of 17)

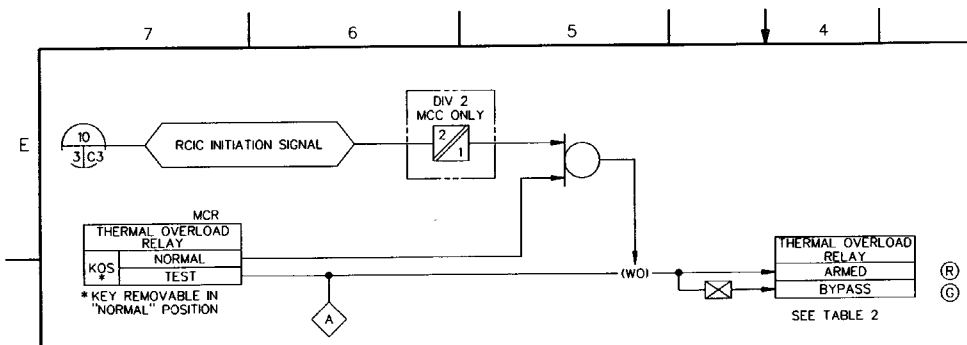

MOTOR CONTROL CENTER THERMAL OVERLOAD RELAY BYPASS
(TYPICAL FOR DIV 2 MCC EXCEPT AS NOTED)

TABLE 2: LIST OF EQUIPMENT WITH THERMAL OVERLOAD RELAY BYPASS

SYSTEM	VALVE NO.	NAME	POWER SUPPLY
RCIC	E51-F001	CST SUCTION VALVE	DIV 1 DC
RCIC	E51-F004	INJECTION VALVE	DIV 1 DC
RCIC	E51-F006	S/P SUCTION VALVE	DIV 1 DC
RCIC	E51-F008	TEST RETURN VALVE	DIV 1 DC
RCIC	E51-F009	TEST RETURN VALVE	DIV 1 DC
RCIC	E51-F011	MINIMUM FLOW VALVE	DIV 1 DC
RCIC	E51-F012	COOLING WATER SUPPLY VALVE	DIV 1 DC
RCIC	E51-F035	STEAM SUPPLY INBOARD ISOL VALVE	DIV 1 AC
RCIC	E51-F036	STEAM SUPPLY OUTBOARD ISOL VALVE	DIV 2 DC
RCIC	E51-F037	STEAM SUPPLY VALVE	DIV 1 DC
RCIC	E51-F039	TURBINE EXHAUST VALVE	DIV 1 DC
RCIC	E51-F045	STEAM SUPPLY BYPASS VALVE	DIV 1 DC
RCIC	E51-F047	VACUUM PUMP DISCH ISOL VALVE	DIV 1 DC
RCIC	E51-F048	STEAM LINE WARM-UP VALVE	DIV 1 AC
RCIC	*	TURBINE TRIP AND THROTTLE VALVE	DIV 1 DC
RCIC	*	CONDENSATE PUMP	DIV 1 DC
RCIC	*	VACUUM PUMP	DIV 1 DC

* SUPPLIED WITH RCIC TURBINE, E51-C002

OPERATING CONTROLS			
SUPERVISORY INSTRUMENTS	USE	SPECIFICATION	LOCATION
ANNUNCIATORS	NO.	INDICATOR	LOCATION
OTHERS			

Figure 7.3-3 REACTOR CORE ISOLATION COOLING SYSTEM IBD (Sheet 15 of 17)

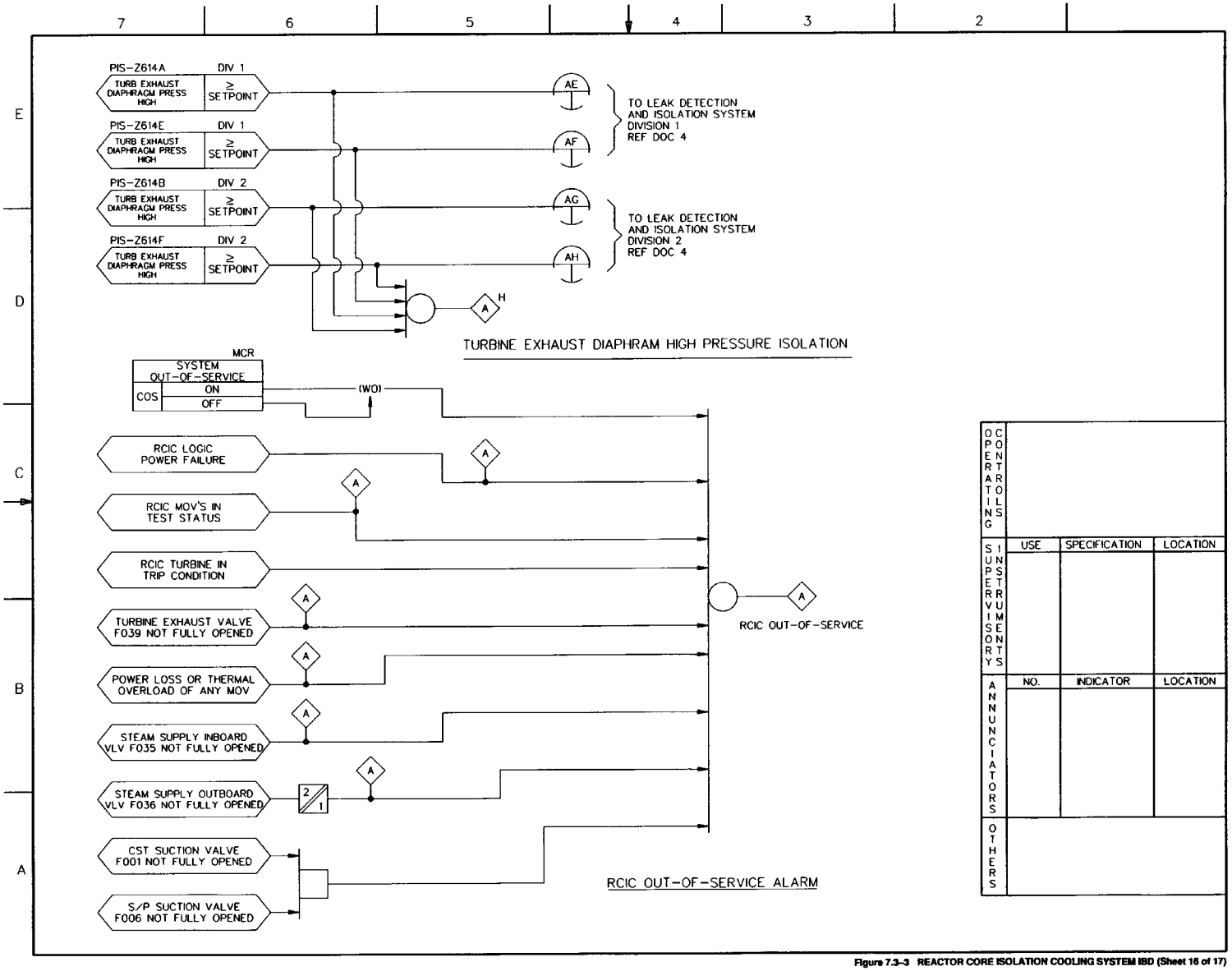

Figure 7.3-3 REACTOR CORE ISOLATION COOLING SYSTEM IBD (Sheet 16 of 17)

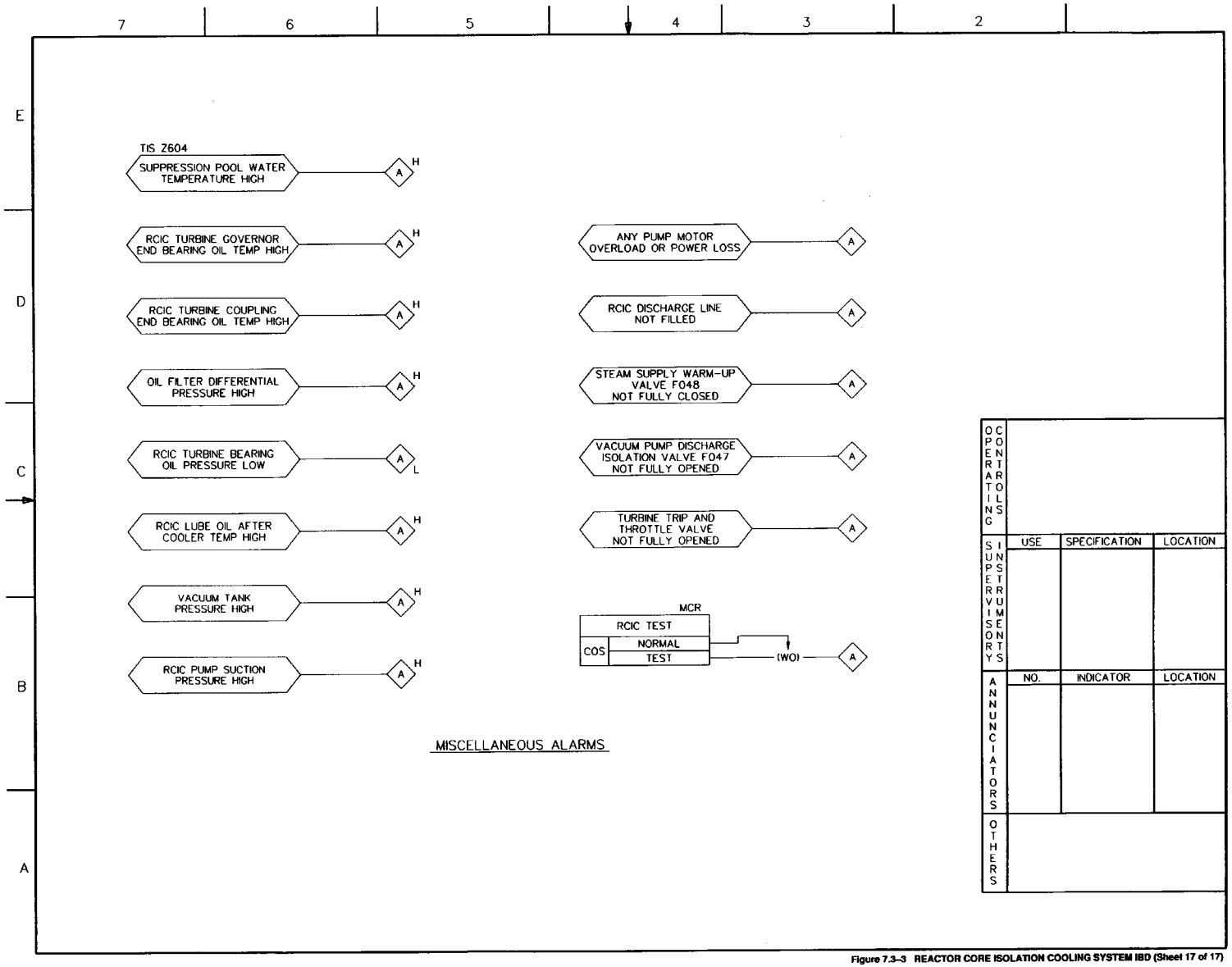

Figure 7.3-3 REACTOR CORE ISOLATION COOLING SYSTEM IBD (Sheet 17 of 17)

NOTES:

1. RHR LOOP "A" LOGIC IS SHOWN. RHR LOOP B, & C LOGIC IS IDENTICAL TO "A" EXCEPT AS NOTED.
2. ALL EQUIPMENT AND INSTRUMENTS ARE PREFIXED BY SYSTEM NUMBER E11 UNLESS OTHERWISE NOTED.
3. VALVES F011A, F011B AND F011C ARE IN ELECTRICAL DIVISION 2, 3 AND 1 RESPECTIVELY. THE MANUAL CONTROL SWITCH FOR VALVES F011A, F011B AND F011C ARE IN ELECTRICAL DIVISIONS 1, 2 AND 3 RESPECTIVELY.
4. SYSTEM R10, ELECTRICAL POWER DISTRIBUTION SYSTEM, SHALL PERMIT MOTOR TO START ONLY FOR PUMP VOLTAGE >70 PERCENT OF NOMINAL.
5. DIVISIONAL SIGNALS SHALL BE ISOLATED FROM THE NON-IE ALARM.
6. THE LOGIC DESIGN SHALL INCORPORATE PROVISIONS TO REVERT 2/4 LOGIC TO 2/3 LOGIC DURING BYPASS OF A SINGLE DIVISION OF SENSORS. ALSO, THE LOGIC DESIGN SHALL NOT PERMIT THE BYPASS OF MORE THAN ONE DIVISION OF SENSORS AT A TIME.
7. SETPOINT VALUES ARE PRELIMINARY AND WILL BE FINALIZED IN DETAILED DESIGN.
8. UNLESS OTHERWISE SPECIFIED, POWER AND CONTROL CIRCUITS ARE DIVISION 1, 2 AND 3 FOR LOOPS A, B AND C RESPECTIVELY.
9. THIS EQUIPMENT IS ALSO CONTROLLED BY REMOTE SHUTDOWN SYSTEM (REFERENCE DOCUMENT 11) FOR RHR LOOPS A AND B ONLY.
10. THE ELECTRICAL POWER DISTRIBUTION SYSTEM SHALL PROVIDE PUMP C001A,B,C STOP SIGNALS DUE TO BUS UNDER VOLTAGE (≤ 30% VOLTAGE) AND ANY OF THE FOLLOWING MOTOR PROTECTIVE RELAY TRIP SIGNALS:
    A. MOTOR OVERCURRENT
    B. BUS DIFFERENTIAL CURRENT
    C. GROUND OVERCURRENT

REFERENCE DOCUMENTS

	MPL NO.
1. NUCLEAR BOILER SYSTEM P&ID	B21-1010
2. SUPPRESSION POOL TEMPERATURE MONITORING SYSTEM IBD	T53-1030
3. RHR SYSTEM P&ID	E11-1010
4. LEAK DETECTION & ISOLATION SYSTEM IBD	E31-1030
5. DELETED	
6. FLAMMABILITY CONTROL SYSTEM P&ID	T49-1010
7. NUCLEAR BOILER SYSTEM IBD	B21-1030
8. REACTOR WATER CLEAN-UP SYSTEM IBD	G31-1030
9. FUEL POOL COOLING SYSTEM IBD	G41-1030
10. REACTOR BLDG COOLING WATER SYSTEM/ REACTOR SERVICE WATER SYSTEM IBD	P21/P41-1030
11. REMOTE SHUTDOWN SYSTEM IBD	C61-1030
12. CONTAINMENT ATMOSPHERE MONITORING SYSTEM IBD	D23-1030
13. INTERLOCK BLOCK DIAGRAM (IBD) STANDARDS	A10-3070
14. REACTOR BLDG COOLING WATER SYSTEM P&ID	P21-1010

FIGURE 7.3-4 RESIDUAL HEAT REMOVAL SYSTEM IBD (Sheet 1 of 20)

TABLE OF CONTENTS

SH NO.	TITLE
1	COVER, NOTES AND REFERENCE DOCUMENTS
2	TABLE OF CONTENTS
3	RHR INITIATION LOGIC FOR LOOP A,B&C
4	LOCA SIGNAL FOR RHR
5	MISCELLANEOUS ALARMS
6	PUMP C001A,B&C
6	PUMP SUCTION VALVE F001A,B&C
7	SHUTDOWN COOLING SUCTION VALVE F012A,B&C
7	HEAT EXCHANGER TUBE SIDE OUTLET VALVE F004A,B&C
7	HEAT EXCHANGER TUBE SIDE BYPASS VALVE F013A,B&C
8	SHUTDOWN COOLING INBOARD SUCTION ISOLATION VALVE F010A,B&C
8	SHUTDOWN COOLING OUTBOARD SUCTION ISOLATION VALVE F011A
9	SHUTDOWN COOLING OUTBOARD SUCTION ISOLATION VALVE F011B
9	SHUTDOWN COOLING OUTBOARD SUCTION ISOLATION VALVE F011C
10	SUPPRESSION POOL RETURN VALVE F008A,B&C
10	TESTABLE CHECK VALVE F006A,B&C AND WARM-UP VALVE F036A,B&C
11	WETWELL SPRAY VALVE F019B&C
11	RHR DISCHARGE LINE FILL PUMP C002A,B&C
12	MINIMUM FLOW VALVE F021A,B&C
12	FUEL POOL ISOLATION VALVE F014B&C
12	FUEL POOL ISOLATION VALVE F015B&C
13	INJECTION VALVE F005A,B&C
13	REACTOR LOW PRESSURE PERMISSIVE LOGIC
14	DRYWELL SPRAY VALVE F017B&C
14	DRYWELL SPRAY VALVE F018B&C
15	LIQUID WASTE FLUSH VALVE F029A,B&C
15	LIQUID WASTE FLUSH VALVE F030A,B&C
15	WARM-UP VALVE F031A,B&C
16	SAMPLING VALVE F043A,B&C
16	SAMPLING VALVE F044A,B&C
16	SAMPLING VALVE F045A
16	SAMPLING VALVE F046A
17	RHR THERMAL OVERLOAD BYPASS LOGIC AND EQUIPMENT LIST
18	OUT-OF-SERVICE ALARM FOR LOOP A,B&C
19	ANNUNCIATOR/ALARM LIGHTS/STATUS LIGHTS
20	SUPPRESSION POOL COOLING AUTO INITIATION LOGIC

Figure 7.3-4 RESIDUAL HEAT REMOVAL SYSTEM IBD (Sheet 2 of 20)

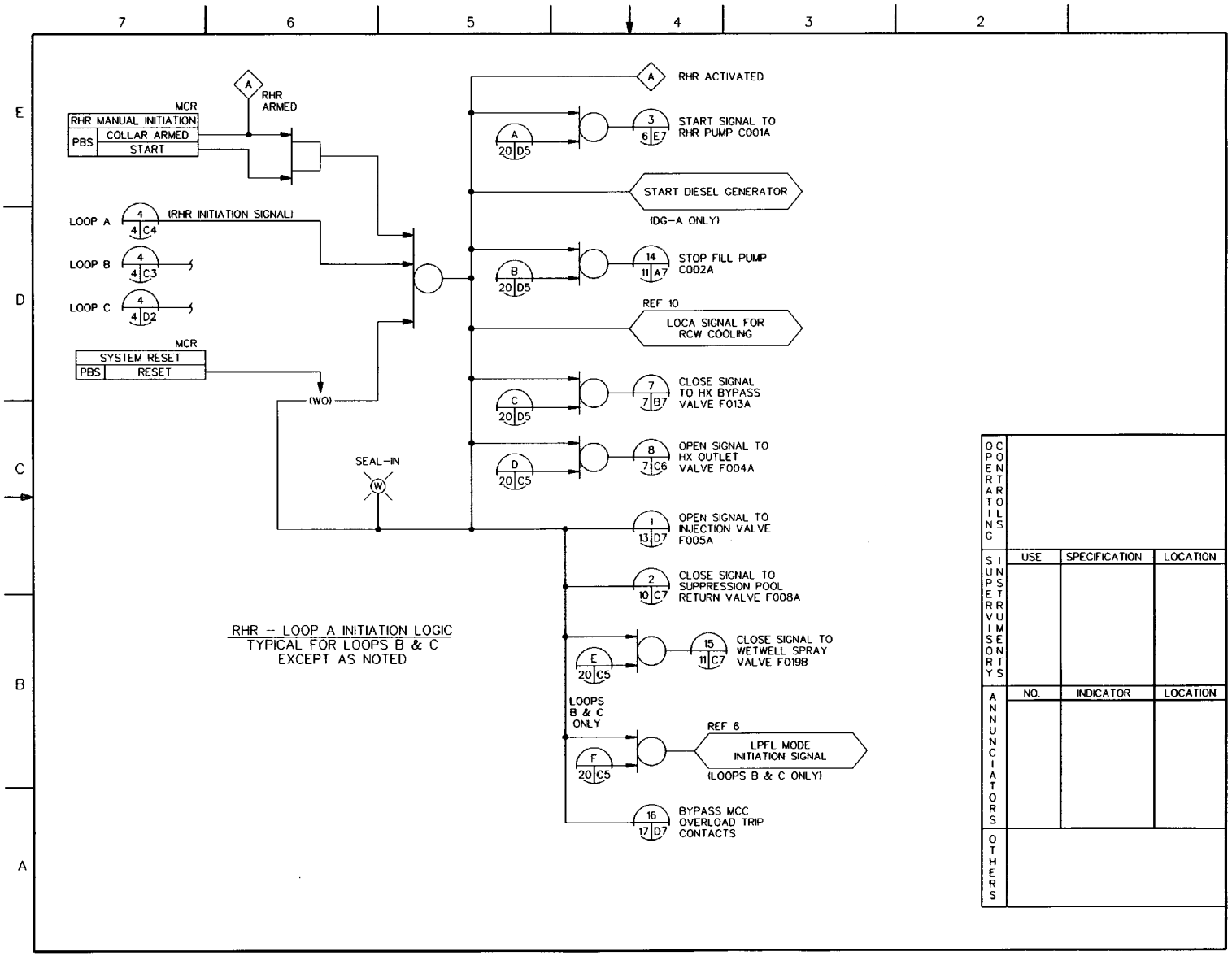

Figure 7.3-4 RESIDUAL HEAT REMOVAL SYSTEM IBD (Sheet 3 of 20)

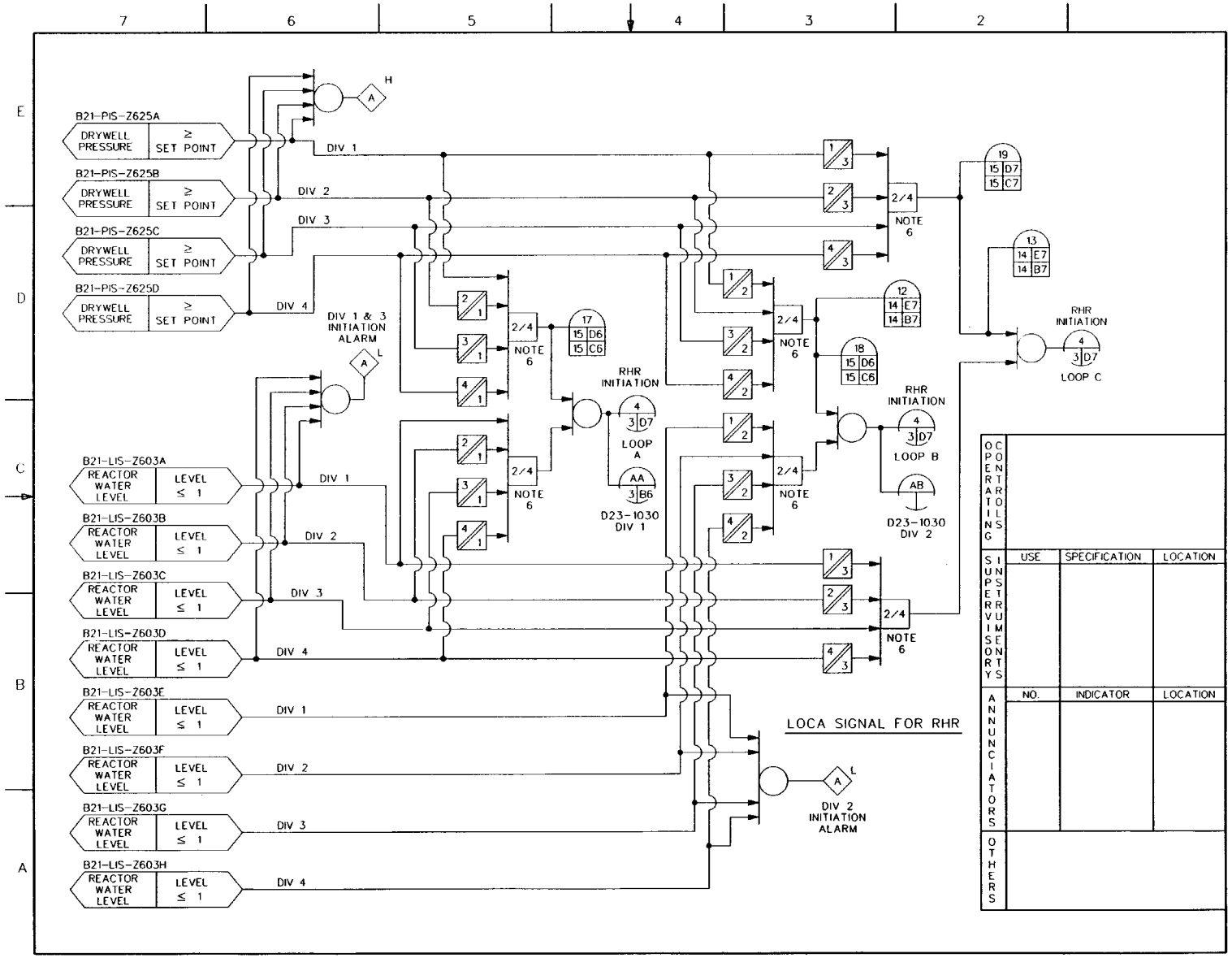

FIGURE 7.3-4 RESIDUAL HEAT REMOVAL SYSTEM IBD (Sheet 4 of 20)

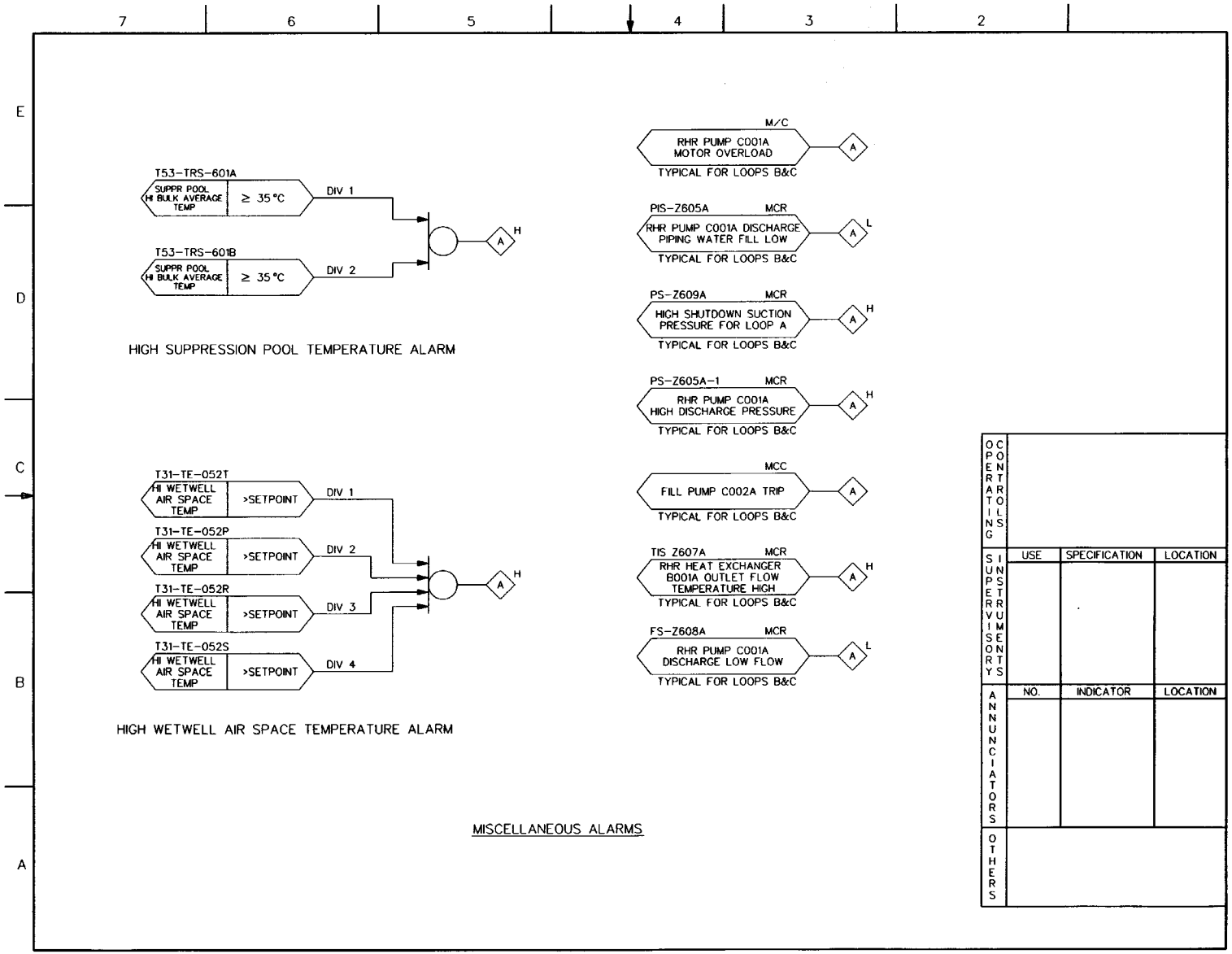

Figure 7.3-4 RESIDUAL HEAT REMOVAL SYSTEM IBD (Sheet 5 of 20)

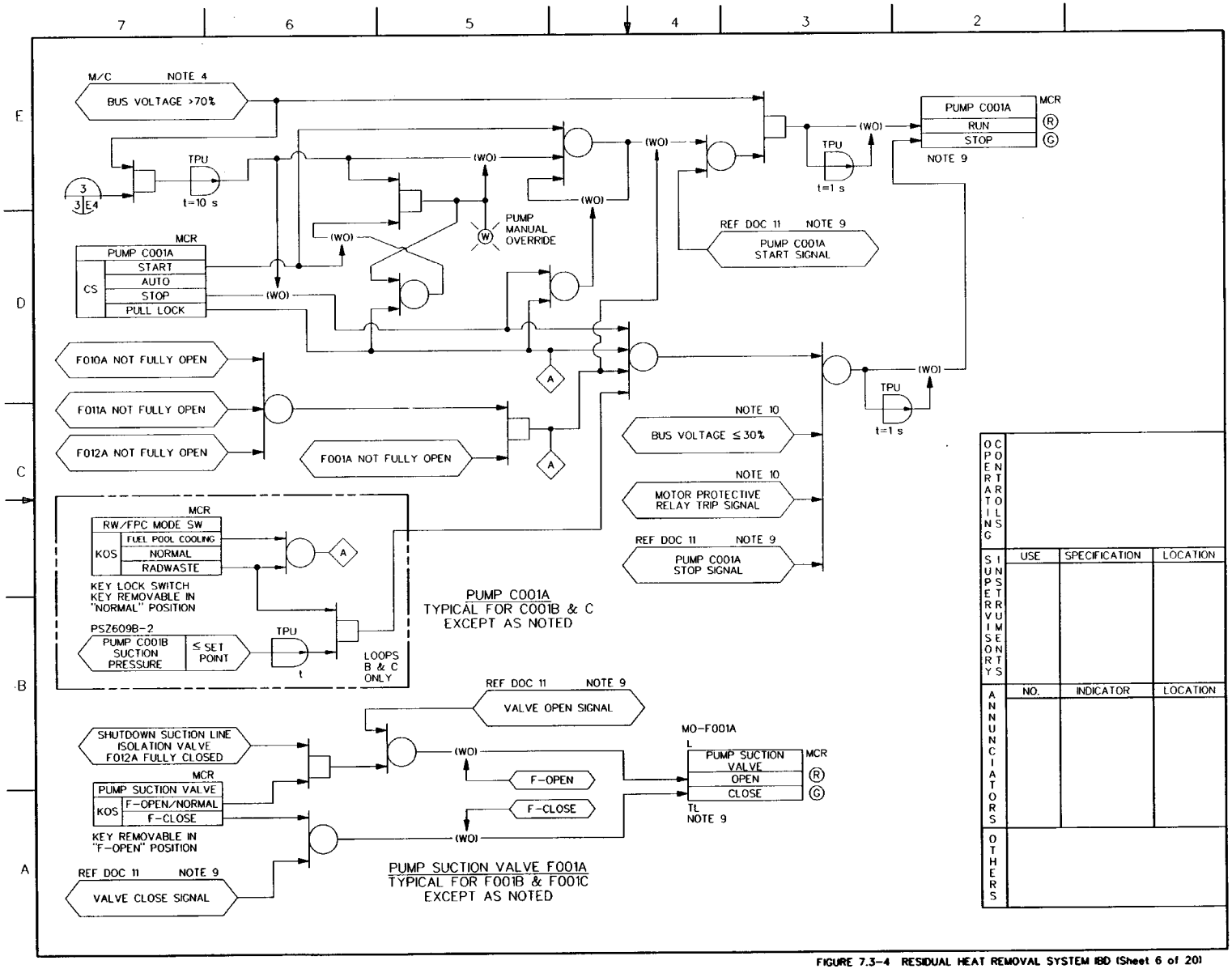

FIGURE 7.3-4 RESIDUAL HEAT REMOVAL SYSTEM IBD (Sheet 6 of 20)

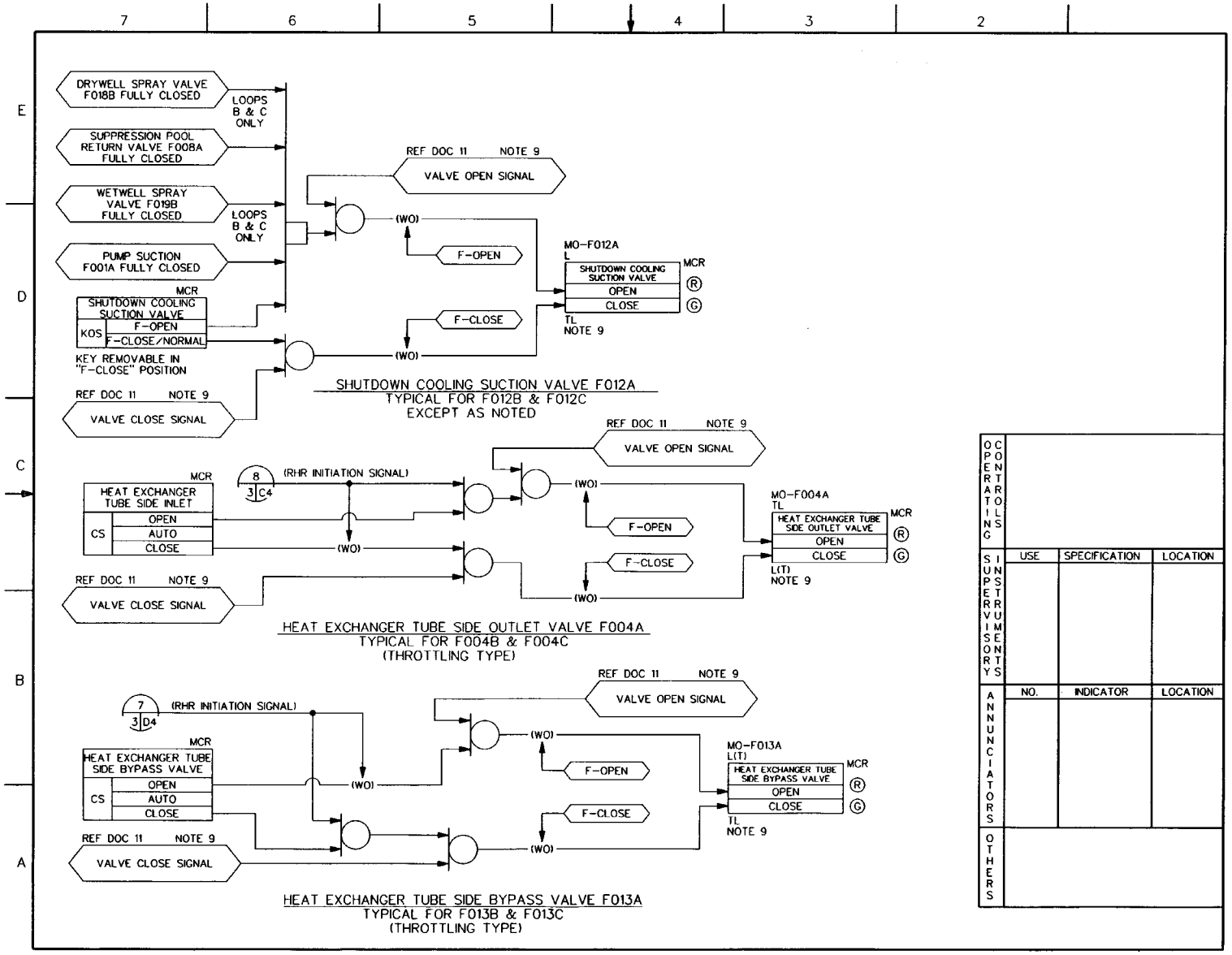

Figure 7.3-4 RESIDUAL HEAT REMOVAL SYSTEM IBD (Sheet 7 of 20)

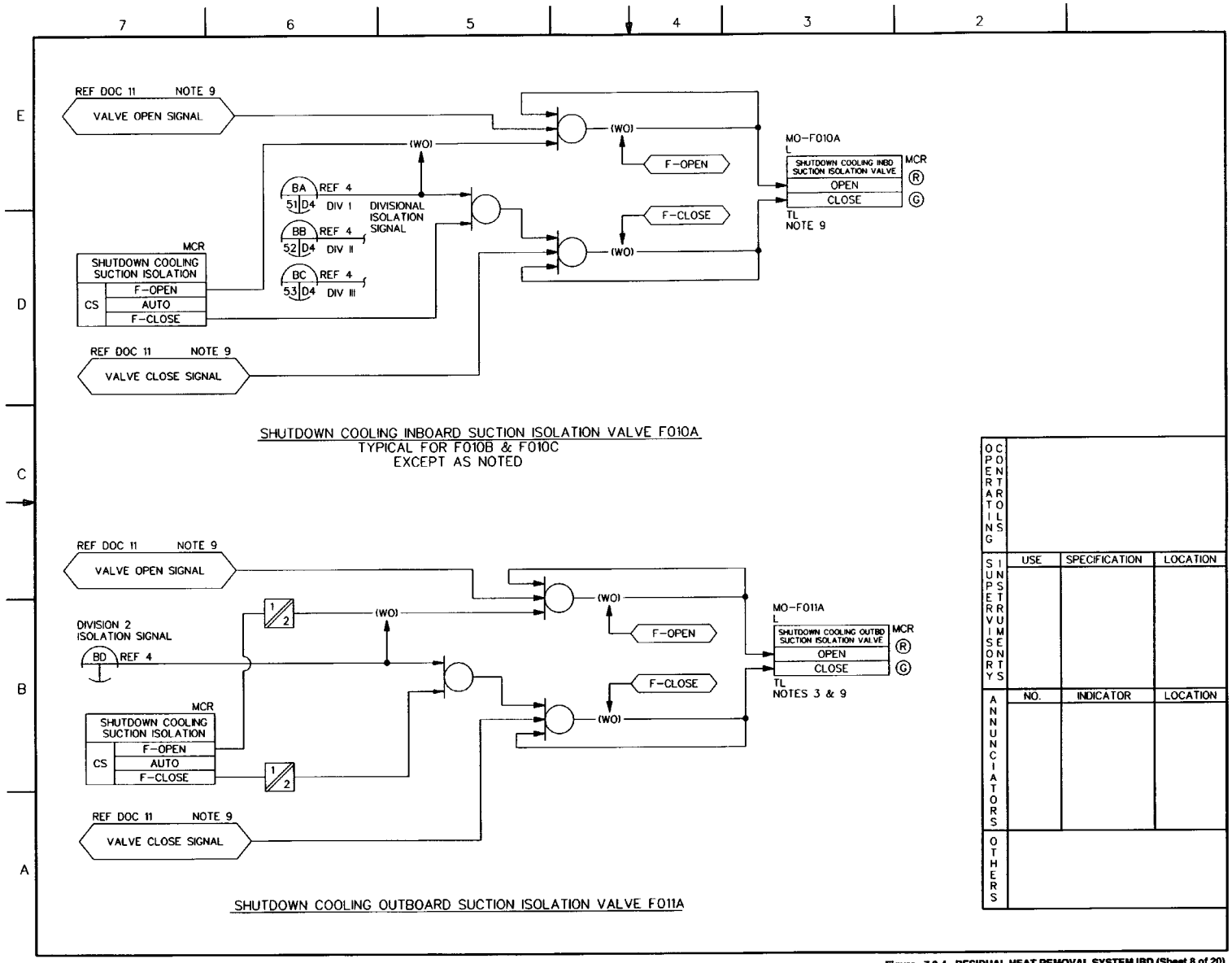

Figure 7.3-4 RESIDUAL HEAT REMOVAL SYSTEM IBD (Sheet 8 of 20)

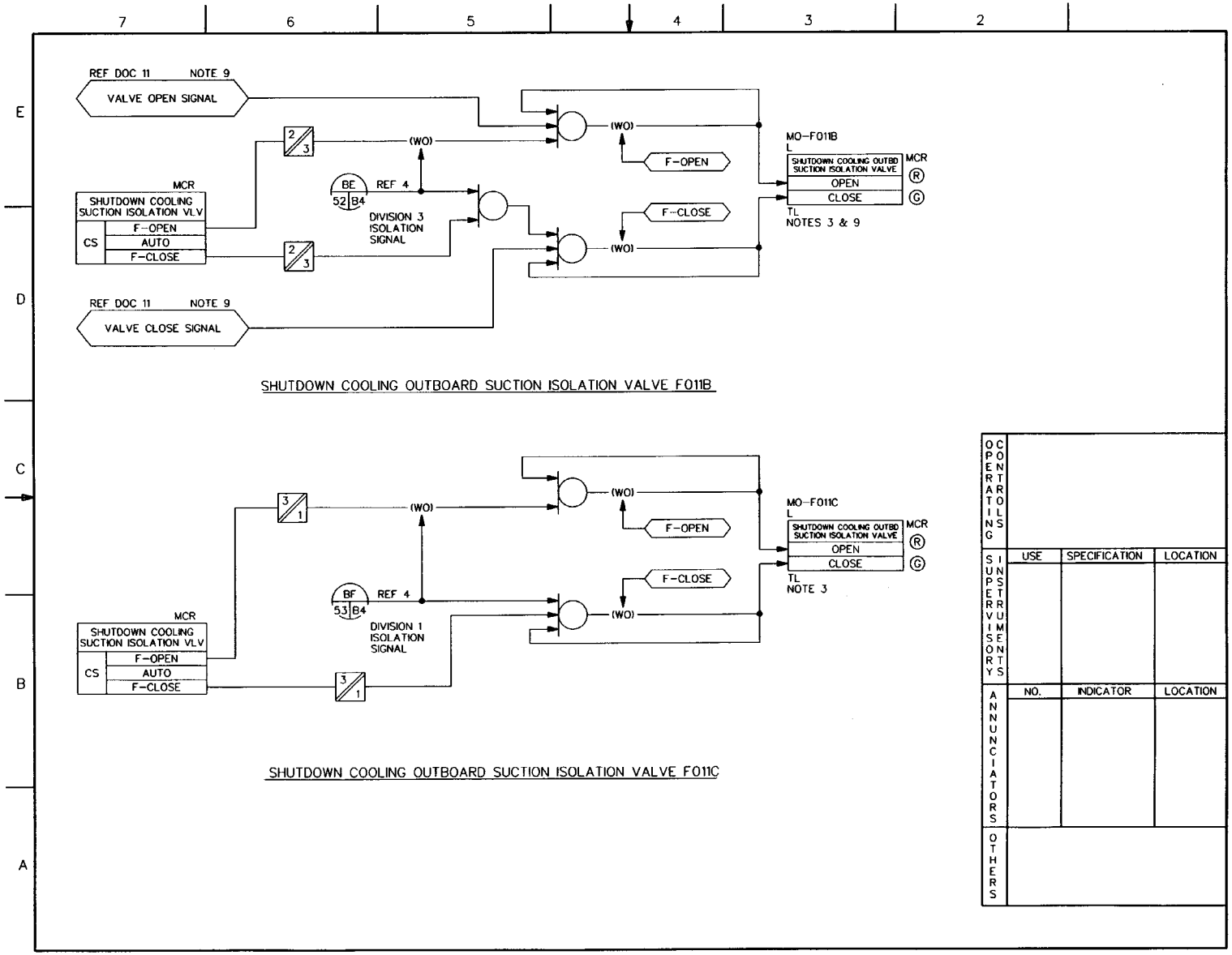

Figure 7.3-4 RESIDUAL HEAT REMOVAL SYSTEM IBD (Sheet 9 of 20)

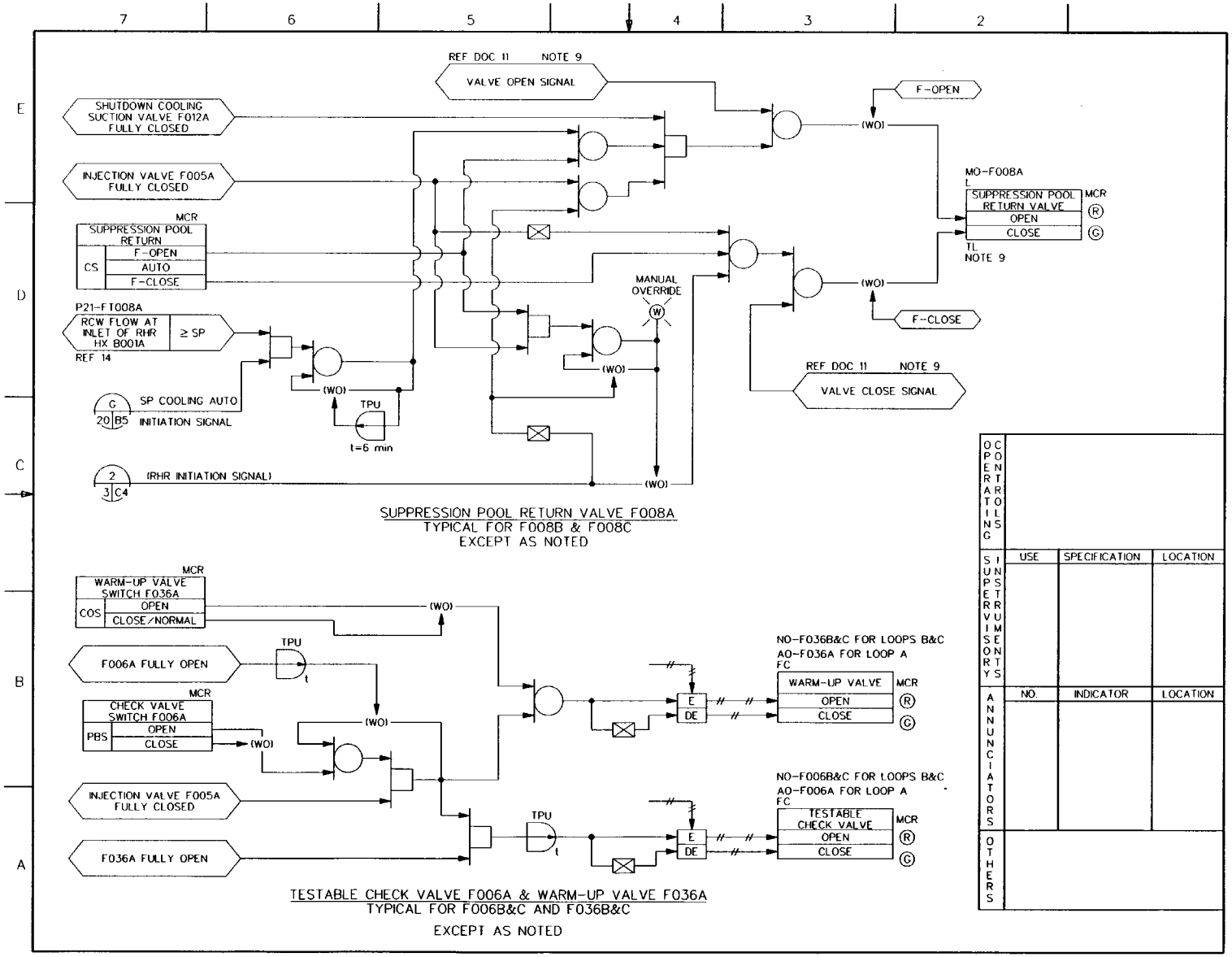

FIGURE 7.3-4 RESIDUAL HEAT REMOVAL SYSTEM IBD (Sheet 10 of 20)

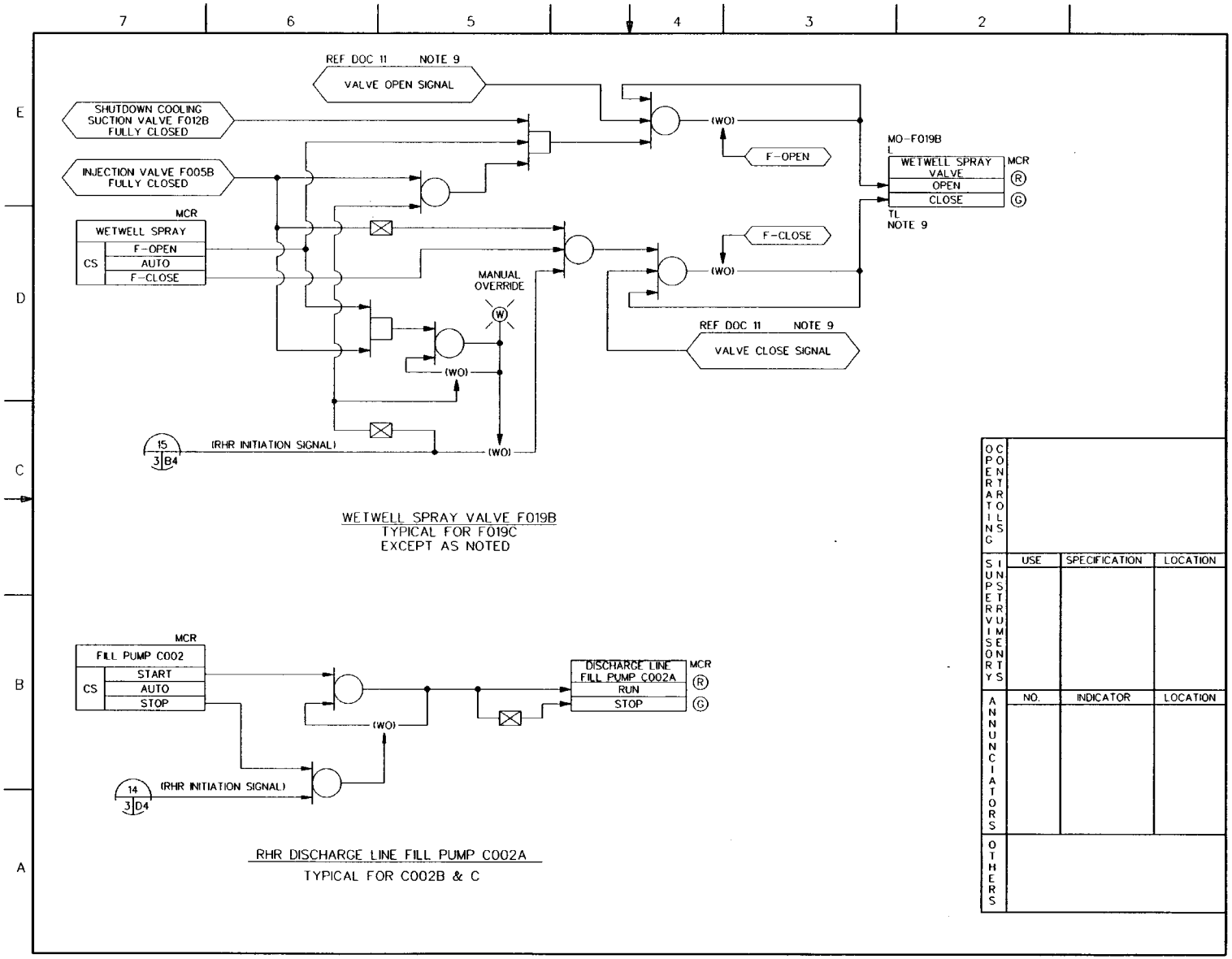

FIGURE 7.3-4 RESIDUAL HEAT REMOVAL SYSTEM IBD (Sheet 11 of 20)

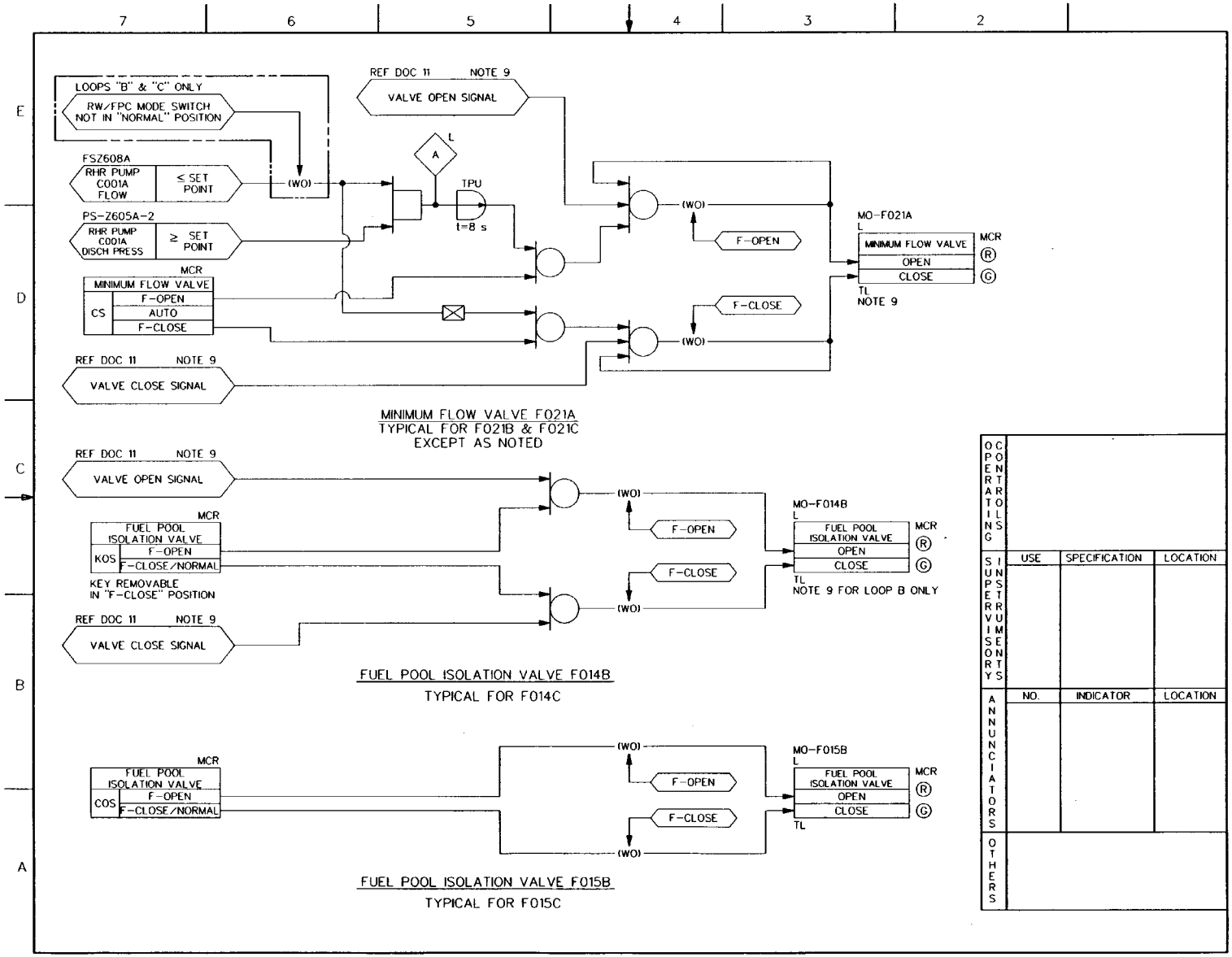

FIGURE 7.3-4 RESIDUAL HEAT REMOVAL SYSTEM IBD (Sheet 12 of 20)

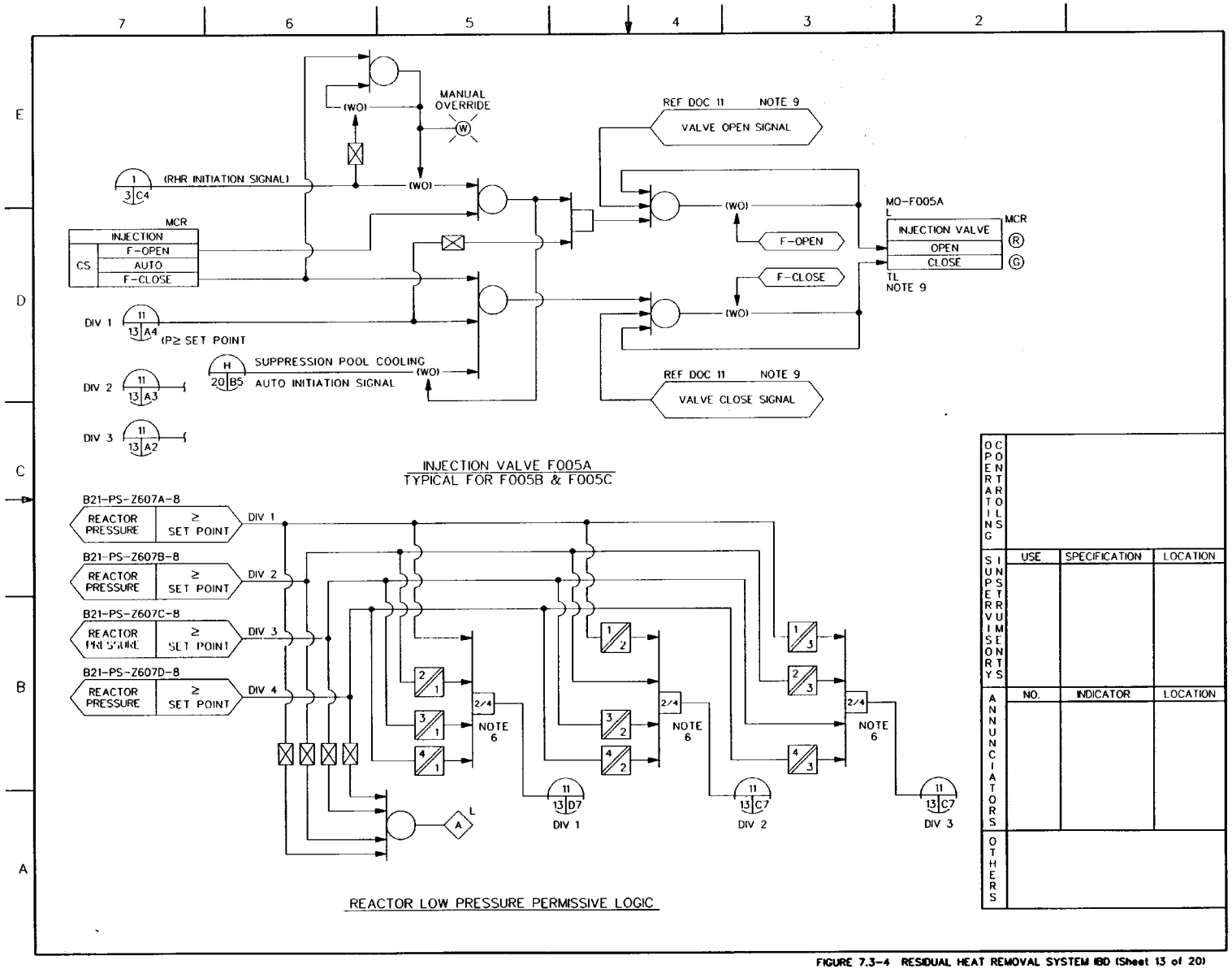

FIGURE 7.3-4 RESIDUAL HEAT REMOVAL SYSTEM IBD (Sheet 13 of 20)

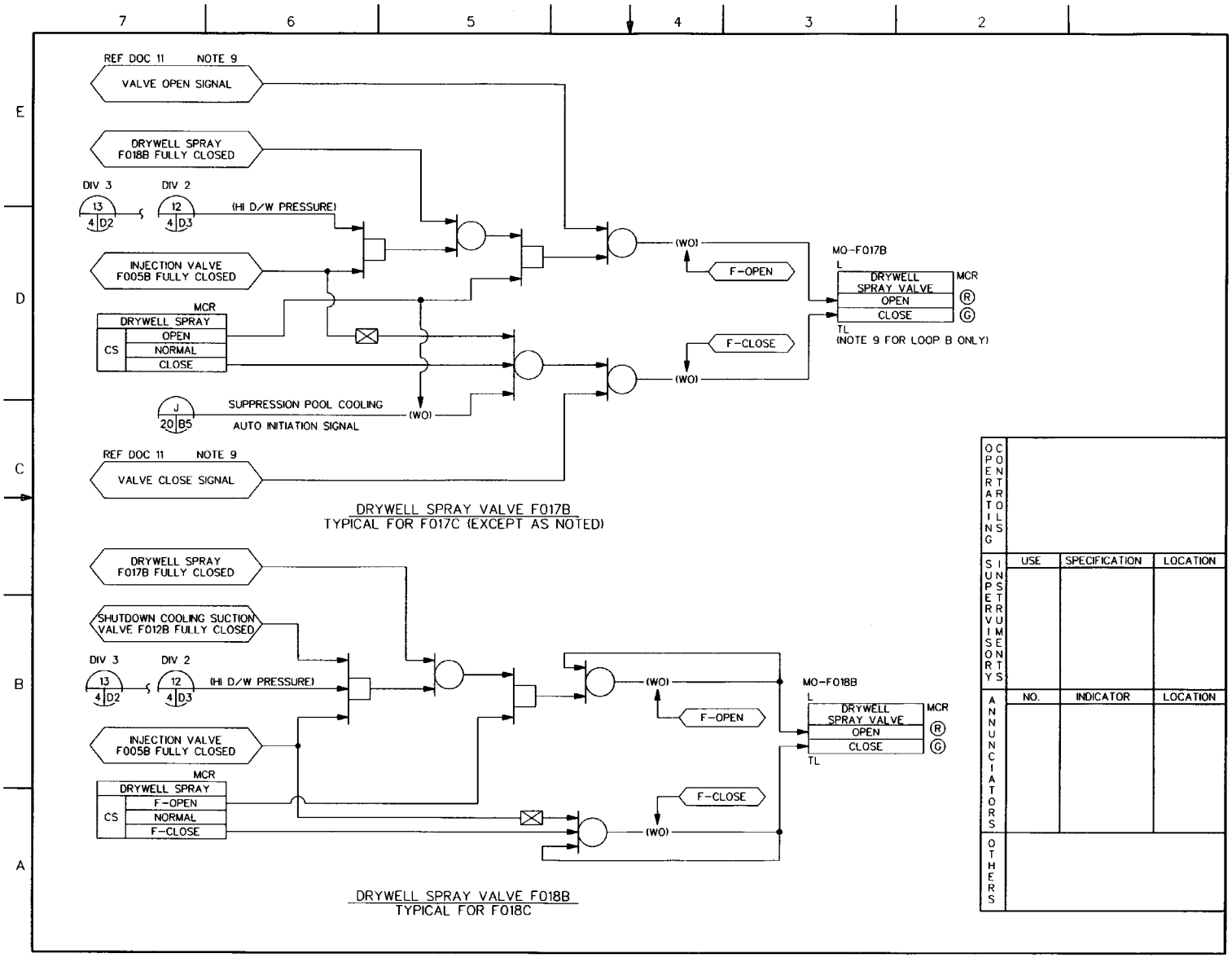

Figure 7.3-4 RESIDUAL HEAT REMOVAL SYSTEM IBD (Sheet 14 of 20)

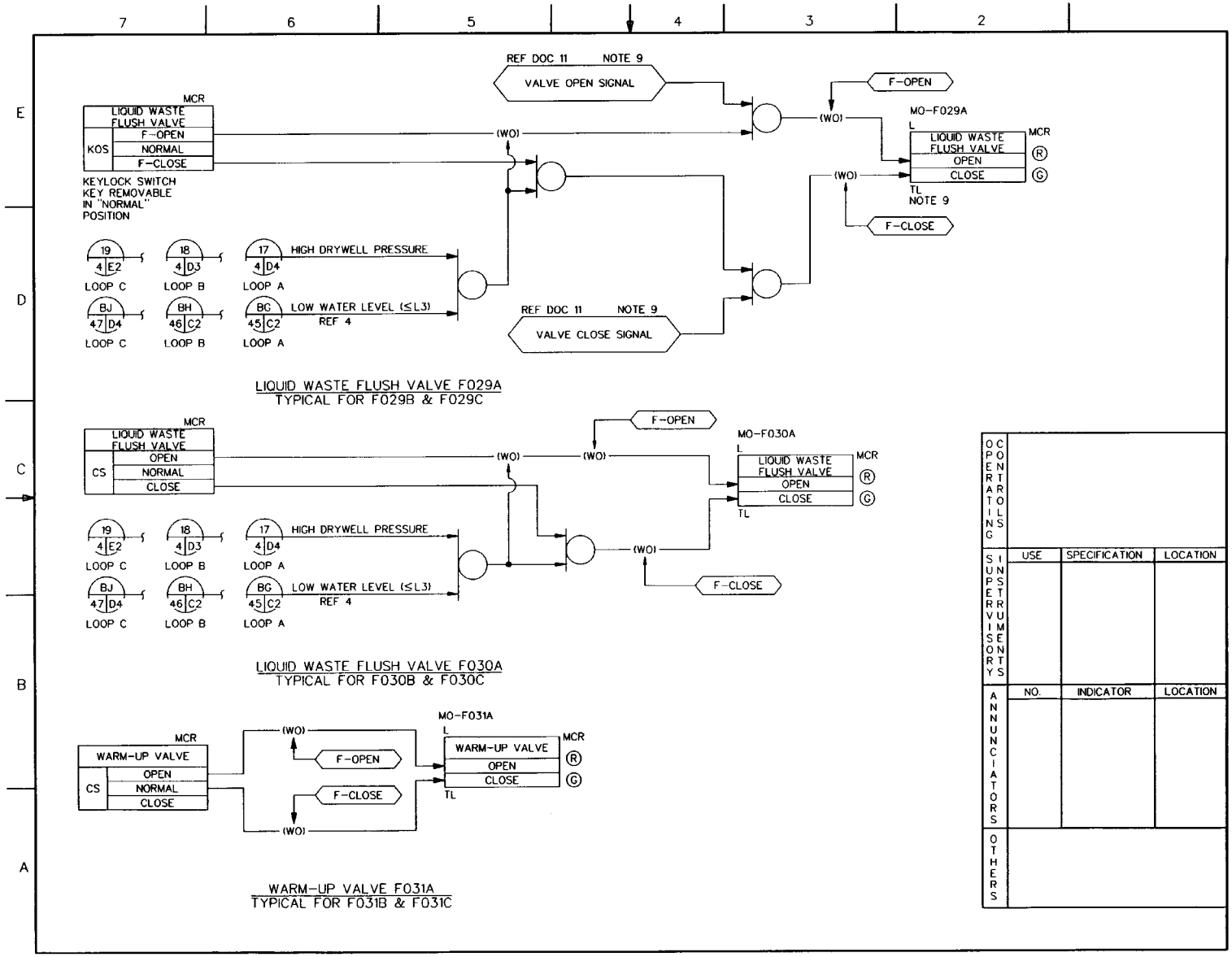

Figure 7.3-4 RESIDUAL HEAT REMOVAL SYSTEM IBD (Sheet 15 of 20)

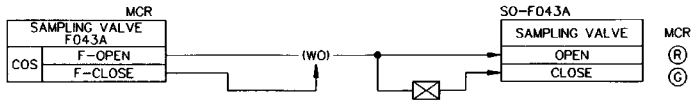

SAMPLING VALVE F043A

TYPICAL FOR F043B&C AND F044A,B,C

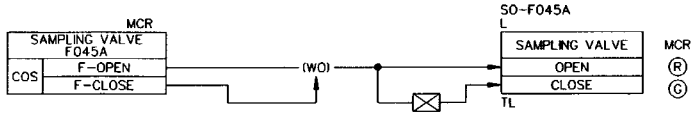

SAMPLING VALVE F045A

TYPICAL FOR F046A

OPERATING CONTROLS			
SUPERVISORY INSTRUMENTS	USE	SPECIFICATION	LOCATION
ANNUNCIATORS	NO.	INDICATOR	LOCATION
OTHERS			

Figure 7.3-4 RESIDUAL HEAT REMOVAL SYSTEM IBD (Sheet 16 of 20)

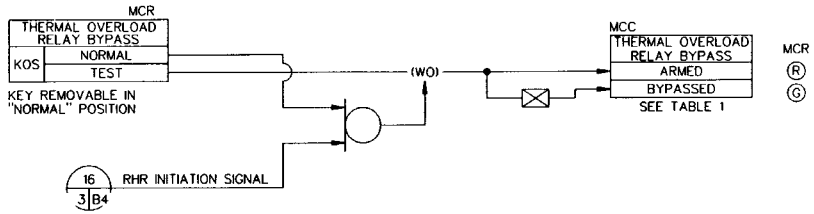

TABLE 1: THERMAL OVERLOAD RELAY BYPASS MCC EQUIPMENT LIST

SYSTEM	EQUIPMENT ID	DESCRIPTION	TYPICAL
RHR LOOP A	E11-MO-F001A	RHR PUMP SUCTION VALVE "A"	FOR LOOPS B&C ALSO
	E11-MO-F004A	RHR HX TUBE SIDE OUTLET VALVE "A"	
	E11-MO-F005A	RHR INJECTION VALVE "A"	
	E11-MO-F008A	RHR SUPPRESSION POOL RETURN VALVE "A"	
	E11-MO-F013A	RHR HX TUBE SIDE BYPASS VALVE "A"	
	E11-MO-F021A	RHR MINIMUM FLOW VALVE "A"	
RHR LOOP B	E11-MO-F017B	RHR DRYWELL SPRAY VALVE "B"	FOR LOOP C ALSO
	E11-MO-F018B	RHR DRYWELL SPRAY VALVE "B"	
	E11-MO-F019B	RHR WETWELL SPRAY VALVE "B"	

RHR LOOP A – THERMAL OVERLOAD RELAY BYPASS LOGIC

TYPICAL FOR LOOPS B&C EXCEPT AS NOTED

OPERATING CONTROLS			
SUPERVISORY INSTRUMENTS	USE	SPECIFICATION	LOCATION
ANNUNCIATORS	NO.	INDICATOR	LOCATION
OTHERS			

Figure 7.3-4 RESIDUAL HEAT REMOVAL SYSTEM IBD (Sheet 17 of 20)

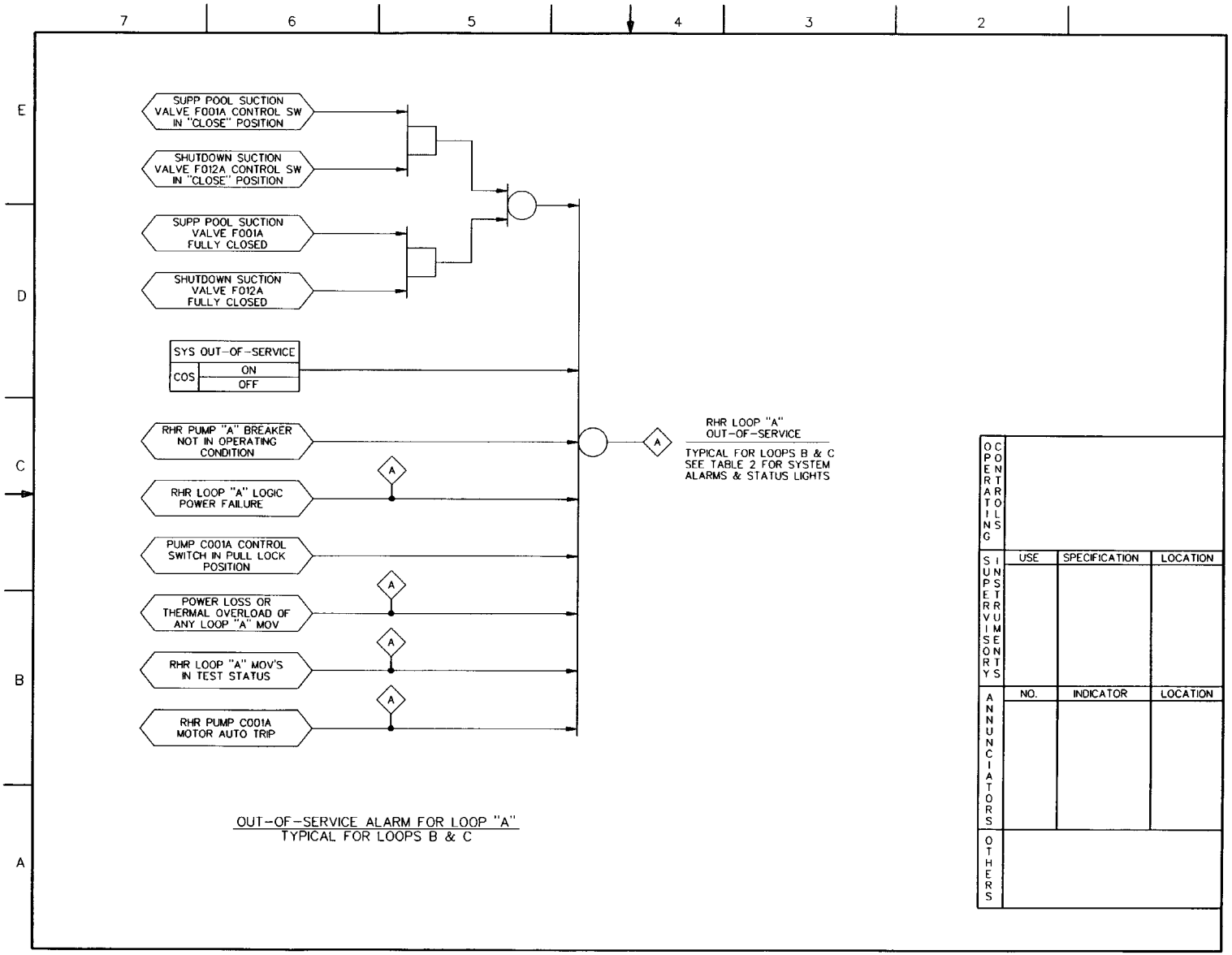

Figure 7.3-4 RESIDUAL HEAT REMOVAL SYSTEM IBD (Sheet 18 of 20)

TABLE 2

ANNUNCIATOR / ALARM LIGHTS / STATUS LIGHTS		
INDICATOR	FUNCTION	INITIATING DEVICE
ALARMS	HIGH DRYWELL PRESSURE	LOGIC OUTPUT
	HIGH SUPPRESSION POOL TEMPERATURE	LOGIC OUTPUT
	LOW REACTOR WATER LEVEL 1	LOGIC OUTPUT
	HIGH WETWELL AIR SPACE TEMPERATURE	LOGIC OUTPUT
	RHR PUMP C001A,B,C HIGH DISCHARGE PRESSURE	PSZ605A-1, B-1, C-1
	RHR LOOP A,B,C ACTIVATED	LOGIC OUTPUT
	RHR PUMP C001A,B,C MOTOR OVERLOAD	METAL CLAD SWITCHGEAR
	LOW REACTOR PRESSURE	LOGIC OUTPUT
	RHR LOOP A,B,C MANUAL INITIATION SWITCH IN ARMED POSITION	PBS
	RHR LOOP A,B,C OUT-OF-SERVICE	COS, LOGIC OUTPUT
	HIGH SHUTDOWN SUCTION PRESSURE LOOP A,B,C	PSZ609A-1, B-1, C-1
	RHR PUMP C001A,B,C DISCHARGE PIPING WATER FILL LOW	PSZ604A, B, C
	RHR LOOP A,B,C LOGIC POWER FAILURE	LOGIC OUTPUT
	POWER LOSS OR THERMAL OVERLOAD OF ANY RHR LOOP A,B,C MOV	MCC
	RHR LOOP A,B,C MOV'S IN TEST STATUS	CS
	RHR C001A,B,C PUMP MOTOR AUTO TRIP	LOGIC OUTPUT
	FILL PUMP C002A,B,C TRIP	MCC
	RHR HEAT EXCHANGER B001A,B,C OUTLET FLOW TEMP HIGH	TIS-Z607A,B,C
	RHR PUMP C001A,B,C OPERATION SWITCH IN PULL-LOCK	PULL LOCK
	RHR PUMPS C001A,B,C SUCTION VALVES CLOSED	LOGIC OUTPUT
	MODE SWITCH IN RW/FPC FOR RHR LOOPS B&C	KOS
	MCC EQUIPMENT IN TEST MODE (THERMAL OVERLOAD RELAY NOT BYPASSED)	KOS
	RHR PUMP C001A,B,C FLOW LOW	LOGIC OUTPUT

TABLE 2 (CON'T)

ANNUNCIATOR / ALARM LIGHTS / STATUS LIGHTS		
INDICATOR	FUNCTION	INITIATING DEVICE
WHITE LIGHT	RHR LOOPS A,B,C INITIATION SIGNAL SEALED-IN	LOGIC OUTPUT
WHITE LIGHT	RHR INJECTION VALVE F005A.B.C MANUAL OVERRIDE	CS, LOGIC OUTPUT
WHITE LIGHT	RHR PUMP C001A,B,C MANUAL OVERRIDE	CS, LOGIC OUTPUT
WHITE LIGHT	WETWELL SPRAY VALVE F019B,C MANUAL OVERRIDE	CS, LOGIC OUTPUT
WHITE LIGHT	SUPPPRESSION POOL RETURN VALVE F008A,B,C MANUAL OVERRIDE	CS, LOGIC OUTPUT
RED LIGHT	SUPPRESSION POOL COOLING INITIATION	LOGIC OUTPUT
RED LIGHT	RCW COOLING OFF FOR TEST OR DRAIN	KOS

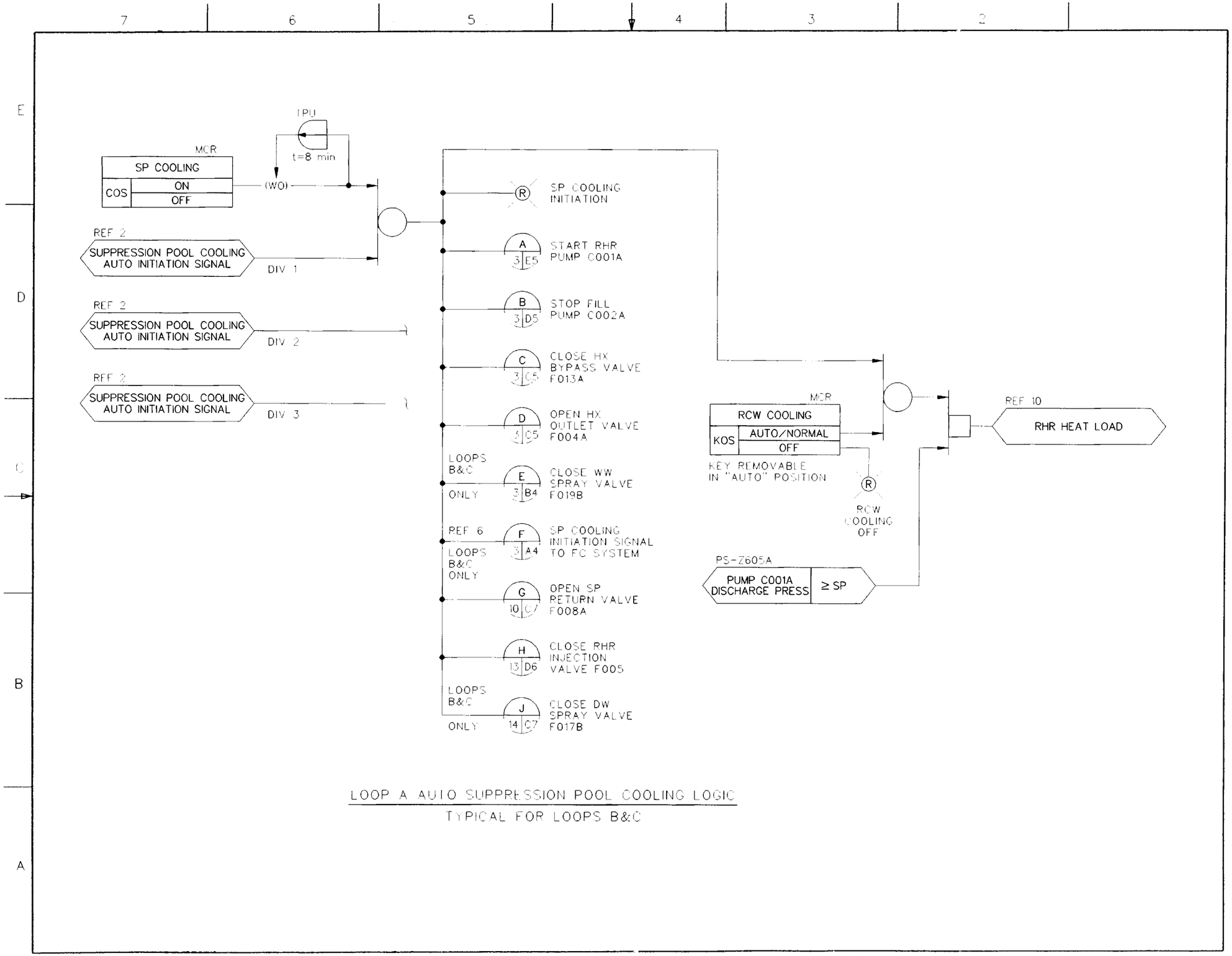

FIGURE 7.3-4 RESIDUAL HEAT REMOVAL SYSTEM IBD (Sheet 20 of 20)