CHAPTER 8: OPERATING PROCEDURES†

8.0 INTRODUCTION:

This chapter outlines the loading, unloading, and recovery procedures for the HI-STORM 100 System for storage operations. The procedures provided in this chapter are prescriptive to the extent that they provide the basis and general guidance for plant personnel in preparing detailed, written, site-specific, loading, handling, storage and unloading procedures. Users may add, modify the sequence of, perform in parallel, or delete steps as necessary provided that the intent of this guidance is met and the requirements of the CoC are met. The information provided in this chapter meets all requirements of NUREG-1536 [8.0.1].

Section 8.1 provides the guidance for loading the HI-STORM 100 System in the spent fuel pool. Section 8.2 provides the procedures for ISFSI operations and general guidance for performing maintenance and responding to abnormal events. Responses to abnormal events that may occur during normal loading operations are provided with the procedure steps. Section 8.3 provides the procedure for unloading the HI-STORM 100 System in the spent fuel pool. Section 8.4 provides the guidance for MPC transfer to the HI-STAR 100 Overpack for transport or storage. Section 8.4 can also be used for recovery of a breached MPC for transport or storage. Section 8.5 provides the guidance for transfer of the MPC into HI-STORM from the HI-STAR 100 transport overpack. Equipment specific operating details such as Vacuum Drying System, valve manipulation and Transporter operation are not within the scope of this FSAR and will be provided to users based on the specific equipment selected by the users and the configuration of the site.

The procedures contained herein describe acceptable methods for performing HI-STORM 100 loading and unloading operations. Unless otherwise stated, references to the HI-STORM 100 apply equally to the HI-STORM 100, 100S and 100S Version B. Users may alter these procedures to allow alternate methods and operations to be performed in parallel or out of sequence as long as the general intent of the procedure is met. In the figures following each section, acceptable configurations of rigging, piping, and instrumentation are shown. In some cases, the figures are artist's renditions. Users may select alternate configurations, equipment and methodology to accommodate their specific needs provided that the intent of this guidance is met and the requirements of the CoC are met. All rigging should be approved by the user's load handling authority prior to use. User-developed procedures and the design and operation of any alternate equipment must be reviewed by the Certificate holder prior to implementation.

Licensees (Users) will utilize the procedures provided in this chapter, equipment-specific operating instructions, and plant working procedures and apply them to develop the site specific written, loading and unloading procedures.

The loading and unloading procedures in Section 8.1 and 8.3 can also be appropriately revised

---

† This chapter has been prepared in the format and section organization set forth in Regulatory Guide 3.61. However, the material content of this chapter also fulfills the requirements of NUREG 1536. Pagination and numbering of sections, figures, and tables are consistent with the convention set down in Chapter 1, Section 1.0, herein. Finally, all terms-of-art used in this chapter are consistent with the terminology of the glossary (Table 1.0.1) and component nomenclature of the Bill-of-Materials (Section 1.5).

HOLTEC INTERNATIONAL COPYRIGHTED MATERIAL

into written site-specific procedures to allow dry loading and unloading of the system in a hot cell or other remote handling facility. The Dry Transfer Facility (DTF) loading and unloading procedures are essentially the same with respect to loading removing moisture, and inerting, of the MPC. The dry transfer facility shall develop the appropriate site-specific procedures as part of the DTF facility license.

Tables 8.1.1 through 8.1.4 provide the handling weights for each of the HI-STORM 100 System major components and the loads to be lifted during various phases of the operation of the HI-STORM 100 System. Users shall take appropriate actions to ensure that the lift weights do not exceed user-supplied lifting equipment rated loads. Table 8.1.5 provides the HI-STORM 100 System bolt torque and sequencing requirements. Table 8.1.6 provides an operational description of the HI-STORM 100 System ancillary equipment along with its safety designation, where applicable. Fuel assembly selection and verification shall be performed by the licensee in accordance with written, approved procedures which ensure that only SNF assemblies authorized in the Certificate of Compliance and as defined in Section 2.1.9 are loaded into the HI-STORM 100 System.

In addition to the requirements set forth in the CoC, users will be required to develop or modify existing programs and procedures to account for the operation of an ISFSI. Written procedures will be required to be developed or modified to account for such things as nondestructive examination (NDE) of the MPC welds, handling and storage of items and components identified as Important to Safety, 10CFR72.48 [8.1.1] programs, specialized instrument calibration, special nuclear material accountability at the ISFSI, security modifications, fuel handling procedures, training and emergency response, equipment and process qualifications. Users are required to take necessary actions to prevent boiling of the water in the MPC. This may be accomplished by performing a site-specific analysis to identify a time limitation to ensure that water boiling will not occur in the MPC prior to the initiation of draining operations. Chapter 4 of the FSAR provides some sample time limits for the time to initiation of draining for various spent fuel pool water temperatures using design basis heat loads. Users are also required to take necessary actions to prevent the fuel cladding from exceeding temperature limits during drying operations and during handling of the MPC in the HI-TRAC transfer cask. Section 4.5 of the FSAR provides requirements on the necessary actions, if any, based on the heat load of the MPC.

Table 8.1.7 summarizes some of the instrumentation used to load and unload the HI-STORM 100 System. Tables 8.1.8, 8.1.9, and 8.1.10 provide sample receipt inspection checklists for the HI-STORM 100 overpack, the MPC, and the HI-TRAC Transfer Cask, respectively. Users may develop site-specific receipt inspection checklists, as required for their equipment. Fuel handling, including the handling of fuel assemblies in the Damaged Fuel Container (DFC) shall be performed in accordance with written site-specific procedures.

HOLTEC INTERNATIONAL COPYRIGHTED MATERIAL

Technical and Safety Basis for Loading and Unloading Procedures

The procedures herein are developed for the loading, storage, unloading, and recovery of spent fuel in the HI-STORM 100 System. The activities involved in loading of spent fuel in a canister system, if not carefully performed, may present risks. The design of the HI-STORM 100 System, including these procedures, the ancillary equipment and the Technical Specifications, serve to minimize risks and mitigate consequences of potential events. To summarize, consideration is given in the loading and unloading systems and procedures to the potential events listed in Table 8.0.1.

The primary objective is to reduce the risk of occurrence and/or to mitigate the consequences of the event. The procedures contain Notes, Warnings, and Cautions to notify the operators to upcoming situations and provide additional information as needed. The Notes, Warnings and Cautions are purposely bolded and boxed and immediately precede the applicable steps.

In the event of an extreme abnormal condition (e.g., cask drop or tip-over event) the user shall have appropriate procedural guidance to respond to the situation. As a minimum, the procedures shall address establishing emergency action levels, implementation of emergency action program, establishment of personnel exclusions zones, monitoring of radiological conditions, actions to mitigate or prevent the release of radioactive materials, and recovery planning and execution and reporting to the appropriate regulatory agencies, as required.

HOLTEC INTERNATIONAL COPYRIGHTED MATERIAL

Table 8.0.1
OPERATIONAL CONSIDERATIONS

POTENTIAL EVENTS	METHODS USED TO ADDRESS EVENT	COMMENTS/ REFERENCES
Cask Drop During Handling Operations	Cask lifting and handling equipment is designed to ANSI N14.6. Procedural guidance is given for cask handling, inspection of lifting equipment, and proper engagement to the trunnions.	See Section 8.1.2.
Cask Tip-Over Prior to welding of the MPC lid	The Lid Retention System is available to secure the MPC lid during movement between the spent fuel pool and the cask preparation area.	See Section 8.1.5. See Figure 8.1.15.
Contamination of the MPC external shell	The annulus seal, pool lid, and Annulus Overpressure System minimize the potential for the MPC external shell to become contaminated from contact with the spent fuel pool water.	See Figures 8.1.13 and 8.1.14.
Contamination spread from cask process system exhausts	Processing systems are equipped with exhausts that can be directed to the plant's processing systems.	See Figures 8.1.19-8.1.22.
Damage to fuel assembly cladding from oxidation	Fuel assemblies are never subjected to air or oxygen during loading and unloading operations.	See Section 8.1.5, and Section 8.3.3
Damage to Vacuum Drying System vacuum gauges from positive pressure	Vacuum Drying System is separate from pressurized gas and water systems.	See Figure 8.1.22 and 8.1.23.
Ignition of combustible mixtures of gas (e.g., hydrogen) during MPC lid welding or cutting	The area around MPC lid shall be appropriately monitored for combustible gases prior to, and during welding or cutting activities. The space below the MPC lid shall be evacuated or purged prior to, and during these activities.	See Section 8.1.5 and Section 8.3.3.

HOLTEC INTERNATIONAL COPYRIGHTED MATERIAL

Table 8.0.1
OPERATIONAL CONSIDERATIONS
(CONTINUED)

POTENTIAL EVENTS	METHODS USED TO ADDRESS EVENT	COMMENTS/ REFERENCES
Excess dose from failed fuel assemblies	MPC gas sampling allows operators to determine the integrity of the fuel cladding prior to opening the MPC. This allows preparation and planning for failed fuel. The RVOAs allow the vent and drain ports to be operated like valves and prevent the need to hot tap into the penetrations during unloading operation.	See Figure 8.1.16 and Section 8.3.3.
Excess dose to operators	The procedures provide ALARA Notes and Warnings when radiological conditions may change.	See ALARA Notes and Warnings throughout the procedures.
Excess generation of radioactive waste	The HI-STORM system uses process systems that minimize the amount of radioactive waste generated. Such features include smooth surfaces for ease of decontamination efforts, prevention of avoidable contamination, and procedural guidance to reduce decontamination requirements. Where possible, items are installed by hand and require no tools.	Examples: HI-TRAC bottom protective cover, bolt plugs in empty holes, pre-wetting of components.
Fuel assembly misloading event	Procedural guidance is given to perform assembly selection verification and a post-loading visual verification of assembly identification prior to installation of the MPC lid.	See Section 8.1.4.
Incomplete moisture removal from MPC	The vacuum drying process reduces the MPC pressure in stages to prevent the formation of ice. Vacuum is held below 3 torr for 30 minutes with the vacuum pump isolated to assure dryness. If the forced helium dehydration process used, the temperature of the gas exiting the demoisturizer is held below 21 °F for a minimum of 30 minutes. The TS require the surveillance requirement for moisture removal to be met before entering transport operations	See Section 8.1.5

HOLTEC INTERNATIONAL COPYRIGHTED MATERIAL

Table 8.0.1
OPERATIONAL CONSIDERATIONS
(CONTINUED)

POTENTIAL EVENTS	METHODS USED TO ADDRESS EVENT	COMMENTS/ REFERENCES
Incorrect MPC lid installation	Procedural guidance is given to visually verify correct MPC lid installation prior to HI-TRAC removal from the spent fuel pool.	See Section 8.1.5.
Load Drop	Rigging diagrams and procedural guidance are provided for all lifts. Component weights are provided in Tables 8.1.1 through 8.1.4.	See Figures 8.1.6, 8.1.7, 8.1.9, 8.1.25 and 8.1.27. See Tables 8.1.1 through 8.1.4.
Over-pressurization of MPC during loading and unloading	Pressure relief valves in the water and gas processing systems limit the MPC pressure to acceptable levels.	See Figures 8.1.20, 8.1.21, 8.1.23 and 8.3.4.
Overstressing MPC lift lugs from side loading	The MPC is upended using the upending frame.	See Figure 8.1.6 and Section 8.1.2.
Overweight cask lift	Procedural guidance is given to alert operators to potential overweight lifts.	See Section 8.1.7 for example. See Tables 8.1.1 through 8.1.4.
Personnel contamination by cutting/grinding activities	Procedural guidance is given to warn operators prior to cutting or grinding activities.	See Section 8.1.5 and Section 8.3.3.
Transfer cask carrying hot particles out of the spent fuel pool	Procedural guidance is given to scan the transfer cask prior to removal from the spent fuel pool.	See Section 8.1.3 and Section 8.1.5.
Unplanned or uncontrolled release of radioactive materials	The MPC vent and drain ports are equipped with metal-to-metal seals to minimize the leakage during moisture removal and helium backfill operations. Unlike elastomer seals, the metal seals resist degradation due to temperature and radiation and allow future access to the MPC ports without hot tapping. The RVOAs allow the port to be opened and closed like a valve so gas sampling may be performed.	See Figure 8.1.11 and 8.1.16. See Section 8.3.3.

HOLTEC INTERNATIONAL COPYRIGHTED MATERIAL

8.1 PROCEDURE FOR LOADING THE HI-STORM 100 SYSTEM IN THE SPENT FUEL POOL

8.1.1 Overview of Loading Operations:

The HI-STORM 100 System is used to load, transfer and store spent fuel. Specific steps are performed to prepare the HI-STORM 100 System for fuel loading, to load the fuel, to prepare the system for storage and to place it in storage at an ISFSI. The MPC transfer may be performed in the cask receiving area, at the ISFSI, or any other location deemed appropriate by the user. HI-TRAC and/or HI-STORM may be transferred between the ISFSI and the fuel loading facility using a specially designed transporter, heavy haul transfer trailer, or any other load handling equipment designed for such applications as long as the lift height restrictions are met (lift height restrictions apply only to suspended forms of transport). Users shall develop detailed written procedures to control on-site transport operations. Section 8.1.2 provides the general procedures for rigging and handling of the HI-STORM overpack and HI-TRAC transfer cask. Figure 8.1.1 shows a general flow diagram of the HI-STORM loading operations.

Refer to the boxes of Figure 8.1.2 for the following description. At the start of loading operations, an empty MPC is upended (Box 1). The empty MPC is raised and inserted into HI-TRAC (Box 2). The annulus is filled with plant demineralized water† and the MPC is filled with either spent fuel pool water or plant demineralized water (borated as required) (Box 3). An inflatable seal is installed in the upper end of the annulus between the MPC and HI-TRAC to prevent spent fuel pool water from contaminating the exterior surface of the MPC. HI-TRAC and the MPC are then raised and lowered into the spent fuel pool for fuel loading using the lift yoke (Box 4). Pre-selected assemblies are loaded into the MPC and a visual verification of the assembly identification is performed (Box 5).

While still underwater, a thick shielded lid (the MPC lid) is installed using either slings attached to the lift yoke or the optional Lid Retention System (Box 6). The lift yoke remotely engages to the HI-TRAC lifting trunnions to lift the HI-TRAC and loaded MPC close to the spent fuel pool surface (Box 7). When radiation dose rate measurements confirm that it is safe to remove the HI-TRAC from the spent fuel pool, the cask is removed from the spent fuel pool. If the Lid Retention System is being used, the HI-TRAC top lid bolts are installed to secure the MPC lid for the transfer to the cask preparation area. The lift yoke and HI-TRAC are sprayed with demineralized water to help remove contamination as they are removed from the spent fuel pool.

HI-TRAC is placed in the designated preparation area and the Lift Yoke and Lid Retention System (if utilized) are removed. The next phase of decontamination is then performed. The top surfaces of the MPC lid and the upper flange of HI-TRAC are decontaminated. The Temporary Shield Ring (if utilized) is installed and filled with water and the neutron shield jacket is filled with water (if drained). The inflatable annulus seal is removed, and the annulus shield (if utilized) is installed. The Temporary Shield Ring provides additional personnel shielding around the top of the HI-TRAC during MPC closure operations. The annulus shield provides additional personnel shielding at the top of the annulus and also prevents small items from being dropped

† Users may substitute domestic water in each step where demineralized water is specified.

HOLTEC INTERNATIONAL COPYRIGHTED MATERIAL

into the annulus. Dose rates are measured at the MPC lid to ensure that the dose rates are within expected values.

The MPC water level is lowered slightly, the MPC is vented, and the MPC lid is seal welded using the automated welding system (Box 8). Visual examinations are performed on the tack welds. Liquid penetrant (PT) examinations are performed on the root and final passes. An ultrasonic or multi-layer PT examination is performed on the MPC Lid-to-Shell weld to ensure that the weld is satisfactory. As an alternative to volumetric examination of the MPC lid-to-shell weld, a multi-layer PT is performed including one intermediate examination after approximately every three-eighth inch of weld depth. The MPC Lid-to-Shell weld is then pressure tested followed by an additional liquid penetrant examination performed on the MPC Lid-to-Shell weld to verify structural integrity. To calculate the helium backfill requirements for the MPC (if the backfill is based upon helium mass or volume measurements), the free volume inside the MPC must first be determined. This free volume may be determined by measuring the volume of water displaced or any other suitable means.

Depending upon the burn-up of the fuel to be loaded in the MPC, moisture is removed from the MPC using either a vacuum drying system or forced helium dehydration system. For MPCs without high burn-up fuel, the vacuum drying system may be connected to the MPC and used to remove all liquid water from the MPC in a stepped evacuation process (Box 9). A stepped evacuation process is used to preclude the formation of ice in the MPC and vacuum drying system lines. The internal pressure is reduced to below 3 torr and held for 30 minutes to ensure that all liquid water is removed.

For high-burn-up fuel, or as an alternative for MPCs without high burn-up fuel, a forced helium dehydration system is utilized to remove residual moisture from the MPC. Gas is circulated through the MPC to evaporate and remove moisture. The residual moisture is condensed until no additional moisture remains in the MPC. The temperature of the gas exiting the system demoisturizer is maintained below 21 °F for a minimum of 30 minutes to ensure that all liquid water is removed

Following MPC moisture removal, the MPC is backfilled with a predetermined amount of helium gas. If the MPC contains high burn-up fuel, then a Supplemental Cooling System (SCS) (if required) is connected to the HI-TRAC annulus prior to helium backfill and is used to circulate coolant to maintain fuel cladding temperatures below ISG-11 Rev. 3 limits (See Figure 2.C.1). The helium backfill ensures adequate heat transfer during storage, and provides an inert atmosphere for long-term fuel integrity. Cover plates are installed and seal welded over the MPC vent and drain ports with liquid penetrant examinations performed on the root and final passes (for multi-pass welds) (Box 10). The cover plate welds are then leak tested.

The MPC closure ring is then placed on the MPC and dose rates are measured at the MPC lid to ensure that the dose rates are within expected values. The closure ring is aligned, tacked in place and seal welded providing redundant closure of the MPC confinement boundary closure welds. Tack welds are visually examined, and the root and final welds are inspected using the liquid penetrant examination technique to ensure weld integrity.

HOLTEC INTERNATIONAL COPYRIGHTED MATERIAL

The annulus shield (if utilized) is removed and the remaining water in the annulus is drained. The Temporary Shield Ring (if utilized) is drained and removed. The MPC lid and accessible areas of the top of the MPC shell are smeared for removable contamination and HI-TRAC dose rates are measured. HI-TRAC top lid[3] is installed and the bolts are torqued (Box 11). The MPC lift cleats are installed on the MPC lid. The MPC lift cleats are the primary lifting point on the MPC. MPC slings are installed between the MPC lift cleats and the lift yoke (Box 12).

If the HI-TRAC 125 is being used, the transfer lid is attached to the HI-TRAC as follows. The HI-TRAC is positioned above the transfer slide to prepare for bottom lid replacement. The transfer slide consists of an adjustable-height rolling carriage and a pair of channel tracks. The transfer slide supports the transfer step which is used to position the two lids at the same elevation and creates a tight seam between the two lids to eliminate radiation streaming. The overhead crane is shut down to prevent inadvertent operation. The transfer slide carriage is raised to support the pool lid while the bottom lid bolts are removed. The transfer slide then lowers the pool lid and replaces the pool lid with the transfer lid. The carriage is raised and the bottom lid bolts are replaced. The MPC lift cleats and slings support the MPC during the transfer operations. Following the transfer, the MPC slings are disconnected and HI-TRAC is positioned for MPC transfer into HI-STORM.

MPC transfer may be performed inside or outside the fuel building (Box 13). Similarly, HI-TRAC and HI-STORM may be transferred to the ISFSI in several different ways (Box 14 and 15). The empty HI-STORM overpack is inspected and positioned with the lid removed. Vent duct shield inserts[1] are installed in the HI-STORM exit vent ducts. The vent duct shield inserts prevent radiation streaming from the HI-STORM Overpack as the MPC is lowered past the exit vents. If the HI-TRAC 100D or 125D is used, the mating device is positioned on top of the HI-STORM. The HI-TRAC is placed on top of HI-STORM. An alignment device (or mating device in the case of HI-TRAC 100D and 125D) helps guide HI-TRAC during this operation[2]. The MPC may be lowered using the MPC downloader, the main crane hook or other similar devices. The MPC downloader (if used) may be attached to the HI-TRAC lid or mounted to the overhead lifting device. The MPC slings are attached to the MPC lift cleats.
If used, the SCS will be disconnected from the HI-TRAC and the HI-TRAC annulus drained, prior to transfer of the MPC from the HI-TRAC to the HI-STORM. If the transfer doors are used (i.e. not the HI-TRAC 100D or 125D), the MPC is raised slightly, the transfer lid door locking pins are removed and the doors are opened. If the HI-TRAC 100D or 125D is used, the pool lid is removed and the mating device drawer is opened. Optional trim plates may be installed on the top and bottom of both doors (or drawer for HI-TRAC 100D and 125D) and secured using hand clamps. The trim plates eliminate radiation streaming above and below the doors (drawer). The MPC is lowered into HI-STORM. Following verification that the MPC is fully lowered, the MPC slings are disconnected from the lifting device and lowered onto the MPC lid. The trim plates are removed, the doors (or drawer) are closed. The empty HI-TRAC must be removed

---

1 Vent duct shield inserts are only used on the HI-STORM 100.

2 The alignment guide may be configured in many different ways to accommodate the specific sites. See Table 8.1.6.

3 Users with the optional HI-TRAC Lid Spacer shall modify steps in their procedures to install and remove the spacer together with top lid

HOLTEC INTERNATIONAL COPYRIGHTED MATERIAL

with the doors open when the HI-STORM 100S is used to prevent interference with the lift cleats and slings. HI-TRAC is removed from on top of HI-STORM. The MPC slings and MPC lift cleats are removed. Hole plugs are installed in the empty MPC lifting holes to fill the voids left by the lift cleat bolts. The alignment device (or mating device with pool lid for HI-TRAC 100D and 125D) and vent duct shield inserts (if used) are removed, and the HI-STORM lid is installed. The exit vent gamma shield cross plates, temperature elements (if used) and vent screens are installed. The HI-STORM lid studs and nuts or lid closure bolts are installed. The HI-STORM is secured to the transporter (as applicable) and moved to the ISFSI pad. The HI-STORM Overpack and HI-TRAC transfer cask may be moved using a number of methods as long as the lifting equipment requirements are met. For sites with high seismic conditions, the HI-STORM 100A is anchored to the ISFSI. Once located at the storage pad, the inlet vent gamma shield cross plates are installed and the shielding effectiveness test is performed. Finally, the temperature elements and their instrument connections are installed (if used), and the air temperature rise testing (if required) is performed to ensure that the system is functioning within its design parameters.

8.1.2 HI-TRAC and HI-STORM Receiving and Handling Operations

Note:
HI-TRAC may be received and handled in several different configurations and may be transported on-site in a horizontal or vertical orientation. This section provides general guidance for HI-TRAC and HI-STORM handling. Site-specific procedures shall specify the required operational sequences based on the handling configuration at the sites.

1. Vertical Handling of HI-TRAC:
   a. Verify that the lift yoke load test certifications are current.
   b. Visually inspect the lifting device (lift yoke or lift links) and the lifting trunnions for gouges, cracks, deformation or other indications of damage. Replace or repair damaged components as necessary.
   c. Engage the lift yoke to the lifting trunnions. See Figure 8.1.3.
   d. Apply lifting tension to the lift yoke and verify proper engagement of the lift yoke.

Note:
Refer to the site's heavy load handling procedures for lift height, load path, floor loading and other applicable load handling requirements.

Warning:
When lifting the loaded HI-TRAC with only the pool lid, the HI-TRAC should be carried as low as practicable. This minimizes the dose rates due to radiation scattering from the floor. Personnel should remain clear of the area and the HI-TRAC should be placed in position as soon as practicable.

   e. Raise HI-TRAC and position it accordingly.
2. Upending of HI-TRAC in the Transfer Frame:

HOLTEC INTERNATIONAL COPYRIGHTED MATERIAL

a. Position HI-TRAC under the lifting device. Refer to Step 1, above.

b. If necessary, remove the missile shield from the HI-TRAC Transfer Frame. See Figure 8.1.4.

c. Verify that the lift yoke load test certifications are current.

d. Visually inspect the lift yoke and the lifting trunnions for gouges, cracks, deformation or other indications of damage. Repair or replace damaged components as necessary.

e. Deleted.

f. Engage the lift yoke to the lifting trunnions. (The use of a ratchet strap or similar device to restrain the lift yoke arms is recommended during HI-TRAC Upending Operations.) See Figure 8.1.3.

g. Apply lifting tension to the lift yoke and verify proper engagement of the lift yoke.

h. Slowly rotate HI-TRAC to the vertical position keeping all rigging as close to vertical as practicable. See Figure 8.1.4.

i. If used, lift the pocket trunnions clear of the Transfer Frame rotation trunnions.

3. Downending of HI-TRAC in the Transfer Frame:

ALARA Warning:
A loaded HI-TRAC should only be downended with the transfer lid or other auxiliary shielding installed.

a. Position the Transfer Frame under the lifting device.

b. Verify that the lift yoke load test certifications are current.

c. Visually inspect the lift yoke and the lifting trunnions for gouges, cracks, deformation or other indications of damage. Repair or replace damaged components as necessary.

d. Deleted.

e. Deleted.

f. Engage the lift yoke to the lifting trunnions. (The use of a ratchet strap or similar device to restrain the lift yoke arms is recommended during HI-TRAC Downending Operations.) See Figure 8.1.3.

g. Apply lifting tension to the lift yoke and verify proper lift yoke engagement.

h. Position the pocket trunnions to receive the Transfer Frame rotation trunnions. See Figure 8.1.4 (Not used for HI-TRAC 100D and 125D).

i. Slowly rotate HI-TRAC to the horizontal position keeping all rigging as close to vertical as practicable.

HOLTEC INTERNATIONAL COPYRIGHTED MATERIAL

j. Disengage the lift yoke.

4. Horizontal Handling of HI-TRAC in the Transfer Frame:

a. Verify that the Transfer Frame is secured to the transport vehicle as necessary.

b. Downend HI-TRAC on the Transfer Frame per Step 3, if necessary.

c. If necessary, install the HI-TRAC missile Shield on the HI-STAR 100 Transfer Frame (See Figure 8.1.4).

5. Vertical Handling of HI-STORM:

Note:
The HI-STORM 100 Overpack may be lifted with a special lifting device that engages the overpack anchor blocks with threaded studs and connects to a cask transporter, crane, or similar equipment. The device is designed in accordance with ANSI N14.6.

a. Visually inspect the HI-STORM lifting device for gouges, cracks, deformation or other indications of damage.

b. Visually inspect the transporter lifting attachments for gouges, cracks, deformation or other indications of damage.

c. If necessary, attach the transporter's lifting device to the transporter and HI-STORM.

d. Raise and position HI-STORM accordingly. See Figure 8.1.5.

6. Empty MPC Installation in HI-TRAC:

Note:
To avoid side loading the MPC lift lugs, the MPC must be upended in the MPC Upending Frame (or equivalent). See Figure 8.1.6.

a. If necessary, rinse off any road dirt with water. Remove any foreign objects from the MPC internals.

b. If necessary, upend the MPC as follows:

1. Visually inspect the MPC Upending Frame for gouges, cracks, deformation or other indications of damage. Repair or replace damaged components as necessary.

2. Install the MPC on the Upending Frame. Make sure that the banding straps are secure around the MPC shell. See Figure 8.1.6.

3. Inspect the Upending Frame slings in accordance with the site's lifting equipment inspection procedures. Rig the slings around the bar in a choker configuration to the outside of the cleats. See Figure 8.1.6.

HOLTEC INTERNATIONAL COPYRIGHTED MATERIAL

4. Attach the MPC upper end slings of the Upending Frame to the main overhead lifting device. Attach the bottom-end slings to a secondary lifting device (or a chain fall attached to the primary lifting device) (See Figure 8.1.6).

5. Raise the MPC in the Upending Frame.

Warning:
The Upending Frame corner should be kept close to the ground during the upending process.

6. Slowly lift the upper end of the Upending Frame while lowering the bottom end of the Upending Frame.

7. When the MPC approaches the vertical orientation, tension on the lower slings may be released.

8. Place the MPC in a vertical orientation.

9. Disconnect the MPC straps and disconnect the rigging.

c. Install the MPC in HI-TRAC as follows:

1. Install the four point lift sling to the lift lugs inside the MPC. See Figure 8.1.7.

2. Raise and place the MPC inside HI-TRAC.

Note:
An alignment punch mark is provided on HI-TRAC and the top edge of the MPC. Similar marks are provided on the MPC lid and closure ring. See Figure 8.1.8.

3. Rotate the MPC so the alignment marks agree and seat the MPC inside HI-TRAC. Disconnect the MPC rigging or the MPC lift rig.

8.1.3 HI-TRAC and MPC Receipt Inspection and Loading Preparation

Note:

Receipt inspection, installation of the empty MPC in the HI-TRAC, and lower fuel spacer installation may occur at any location or be performed at any time prior to complete submersion in the spent fuel pool as long as appropriate steps are taken to prevent contaminating the exterior of the MPC or interior of the HI-TRAC.

ALARA Note:
A bottom protective cover may be attached to HI-TRAC pool lid bottom. This will help prevent imbedding contaminated particles in HI-TRAC bottom surface and ease the decontamination effort.

1. Place HI-TRAC in the cask receiving area. Perform appropriate contamination and security surveillances, as required.

HOLTEC INTERNATIONAL COPYRIGHTED MATERIAL

2. If necessary, remove HI-TRAC Top Lid by removing the top lid bolts and using the lift sling. See Figure 8.1.9 for rigging.

   a. Rinse off any road dirt with water. Inspect all cavity locations for foreign objects. Remove any foreign objects.

   b. Perform a radiological survey of the inside of HI-TRAC to verify there is no residual contamination from previous uses of the cask.

3. Disconnect the rigging.

4. Store the Top Lid and bolts in a site-approved location.

5. If necessary, configure HI-TRAC with the pool lid as follows:

ALARA Warning:
The bottom lid replacement as described below may be performed only on an empty HI-TRAC.

   a. Inspect the seal on the pool lid for cuts, cracks, gaps and general condition. Replace the seal if necessary.

   b. Remove the bottom lid bolts and store them temporarily.

   c. Raise the empty HI-TRAC and position it on top of the pool lid.

   d. Inspect the pool lid bolts for general condition. Replace worn or damaged bolts with new bolts.

   e. Install the pool lid bolts. See Table 8.1.5 for torque requirements.

   f. If necessary, thread the drain connector pipe to the pool lid.

   g. Store the HI-TRAC Transfer Lid in a site-approved location.

6. At the site's discretion, perform an MPC receipt inspection and cleanliness inspection in accordance with a site-specific inspection checklist.

7. Install the MPC inside HI-TRAC and place HI-TRAC in the designated preparation area. See Section 8.1.2.

Note:
Upper fuel spacers are fuel-type specific. Not all fuel types require fuel spacers. Upper fuel spacer installation may occur any time prior to MPC lid installation.

8. Install the upper fuel spacers in the MPC lid as follows:

Warning:
Never work under a suspended load.

   a. Position the MPC lid on supports to allow access to the underside of the MPC lid.

   b. Thread the fuel spacers into the holes provided on the underside of the MPC lid. See Figure 8.1.10 and Table 8.1.5 for torque requirements.

HOLTEC INTERNATIONAL COPYRIGHTED MATERIAL

c. Install threaded plugs in the MPC lid where and when spacers will not be installed, if necessary. See Table 8.1.5 for torque requirements.

9. At the user's discretion perform an MPC lid and closure ring fit test:

Note:
It may be necessary to perform the MPC installation and inspection in a location that has sufficient crane clearance to perform the operation.

a. Visually inspect the MPC lid rigging (See Figure 8.1.9).

b. At the user's discretion, raise the MPC lid such that the drain line can be installed. Install the drain line to the underside of the MPC lid. See Figure 8.1.11.

Note:
The MPC Shell is relatively flexible compared to the MPC Lid and may create areas of local contact that impede Lid insertion in the Shell. Grinding of the MPC Lid below the minimum diameter on the drawing is permitted to alleviate interference with the MPC Shell in areas of localized contact. If the amount of material removed from the surface exceeds 1/8", the surface shall be examined by a liquid penetrant method (NB-2546). The weld prep for the Lid-to-Shell weld shall be maintained after grinding.

c. Align the MPC lid and lift yoke so the drain line will be positioned in the MPC drain location. See Figure 8.1.12. Install the MPC lid. Verify that the MPC lid fit and weld prep are in accordance with the design drawings.

ALARA Note:
The closure ring is installed by hand. Some grinding may be required on the closure ring to adjust the fit.

d. Install, align and fit-up the closure ring.

e. Verify that closure ring fit and weld prep are in accordance with the fabrication drawings or the approved design drawings.

f. Remove the closure ring, vent and drain port cover plates and the MPC lid. Disconnect the drain line. Store these components in an approved plant storage location.

10. At the user's discretion, perform an MPC vent and drain port cover plate fit test and verify that the weld prep is in accordance with the approved fabrication drawings.

Note:
Fuel spacers are fuel-type specific. Not all fuel types require fuel spacers. Lower fuel spacers are set in the MPC cells manually. No restraining devices are used.

11. Install lower fuel spacers in the MPC (if necessary). See Figure 8.1.10.

12. Fill the MPC and annulus as follows:

a. Fill the annulus with plant demineralized water to just below the inflatable seal seating surface.

HOLTEC INTERNATIONAL COPYRIGHTED MATERIAL

Caution:
Do not use any sharp tools or instruments to install the inflatable seal. Some air in the inflatable seal helps in the installation.

b. Manually insert the inflatable annulus seal around the MPC. See Figure 8.1.13.

c. Ensure that the seal is uniformly positioned in the annulus area.

d. Inflate the seal.

e. Visually inspect the seal to ensure that it is properly seated in the annulus. Deflate, adjust and inflate the seal as necessary. Replace the seal as necessary.

ALARA Note:
Bolt plugs, placed in, or waterproof tape over empty bolt holes, reduce the time required for decontamination.

13. At the user's discretion, install HI-TRAC top lid bolt plugs and/or apply waterproof tape over any empty bolt holes.

ALARA Note:
Keeping the water level below the top of the MPC prevents splashing during handling.

14. Fill the MPC with either demineralized water or spent fuel pool water to approximately 12 inches below the top of the MPC shell. Refer to Tables 2.1.14 and 2.1.16 for boron concentration requirements.

15. If necessary for plant crane capacity limitations, drain the water from the neutron shield jacket. See Tables 8.1.1 through 8.1.4 as applicable.

16. Place HI-TRAC in the spent fuel pool as follows:

ALARA Note:
The term "Spent Fuel Pool" is used generically to refer to the users designated cask loading location. The optional Annulus Overpressure System is used to provide further protection against MPC external shell contamination during in-pool operations.

a. If used, fill the Annulus Overpressure System lines and reservoir with demineralized water and close the reservoir valve. Attach the Annulus Overpressure System to the HI-TRAC. See Figure 8.1.14.

b. Verify spent fuel pool for boron concentration requirements in accordance with Tables 2.1.14 and 2.1.16.

c. Engage the lift yoke to HI-TRAC lifting trunnions and position HI-TRAC over the cask loading area with the basket aligned to the orientation of the spent fuel racks.

ALARA Note:
Wetting the components that enter the spent fuel pool may reduce the amount of decontamination work to be performed later.

HOLTEC INTERNATIONAL COPYRIGHTED MATERIAL

d. Wet the surfaces of HI-TRAC and lift yoke with plant demineralized water while slowly lowering HI-TRAC into the spent fuel pool.

e. When the top of the HI-TRAC reaches the elevation of the reservoir, open the Annulus Overpressure System reservoir valve. Maintain the reservoir water level at approximately 3/4 full the entire time the cask is in the spent fuel pool.

f. Place HI-TRAC on the floor of the cask loading area and disengage the lift yoke. Visually verify that the lift yoke is fully disengaged. Remove the lift yoke from the spent fuel pool while spraying the crane cables and yoke with plant demineralized water.

g. Observe the annulus seal for signs of air leakage. If leakage is observed (by the steady flow of bubbles emanating from one or more discrete locations) then immediately remove the HI-TRAC from the spent fuel pool and repair or replace the seal.

8.1.4 MPC Fuel Loading

Note:
An underwater camera or other suitable viewing device may be used for monitoring underwater operations.
Note:
When loading MPCs requiring soluble boron, the boron concentration of the water shall be checked in accordance with Tables 2.1.14 and 2.1.16 before and during operations with fuel and water in the MPC.

1. Perform a fuel assembly selection verification using plant fuel records to ensure that only fuel assemblies that meet all the conditions for loading as specified in Section 2.1.9 have been selected for loading into the MPC.

2. Load the pre-selected fuel assemblies into the MPC in accordance with the approved fuel loading pattern.

3. Perform a post-loading visual verification of the assembly identification to confirm that the serial numbers match the approved fuel loading pattern.

HOLTEC INTERNATIONAL COPYRIGHTED MATERIAL

8.1.5 MPC Closure

Note:
The user may elect to use the Lid Retention System (See Figure 8.1.15) to assist in the installation of the MPC lid and lift yoke, and to provide the means to secure the MPC lid in the event of a drop accident during loaded cask handling operations outside of the spent fuel pool. The user is responsible for evaluating the additional weight imposed on the cask, lift yoke, crane and floor prior to use. See Tables 8.1.1 through 8.1.4 as applicable. The following guidance describes installation of the MPC lid using the lift yoke. The MPC lid may also be installed separately.

Depending on facility configuration, users may elect to perform MPC closure operations with the HI-TRAC partially submerged in the spent fuel pool. If opted, operations involving removal of the HI-TRAC from the spent fuel pool shall be sequenced accordingly.

1. Remove the HI-TRAC from the spent fuel pool as follows:

   a. Visually inspect the MPC lid rigging or Lid Retention System in accordance with site-approved rigging procedures. Attach the MPC lid to the lift yoke so that MPC lid, drain line and trunnions will be in relative alignment. Raise the MPC lid and adjust the rigging so the MPC lid hangs level as necessary.

   b. Install the drain line to the underside of the MPC lid. See Figure 8.1.17.

   c. Align the MPC lid and lift yoke so the drain line will be positioned in the MPC drain location and the cask trunnions will also engage. See Figure 8.1.11 and 8.1.17.

ALARA Note:
Pre-wetting the components that enter the spent fuel pool may reduce the amount of decontamination work to be performed later.

   d. Slowly lower the MPC lid into the pool and insert the drain line into the drain access location and visually verify that the drain line is correctly oriented. See Figure 8.1.12.

   e. Lower the MPC lid while monitoring for any hang-up of the drain line. If the drain line becomes kinked or disfigured for any reason, remove the MPC lid and replace the drain line.

Note:
The outer diameter of the MPC lid will seat flush with the top edge of the MPC shell when properly installed. Once the MPC lid is installed, the HI-TRAC /MPC removal from the spent fuel pool should proceed in a continuous manner to minimize the rise in MPC water temperature.

   f. Seat the MPC lid in the MPC and visually verify that the lid is properly installed.

   g. Engage the lift yoke to HI-TRAC lifting trunnions.

HOLTEC INTERNATIONAL COPYRIGHTED MATERIAL

h. Apply a slight tension to the lift yoke and visually verify proper engagement of the lift yoke to the lifting trunnions.

ALARA Note:

Activated debris may have settled on the top face of HI-TRAC and MPC during fuel loading. The cask top surface should be kept under water until a preliminary dose rate scan clears the cask for removal. Users are responsible for any water dilution considerations.

i. Raise HI-TRAC until the MPC lid is just below the surface of the spent fuel pool. Survey the area above the cask lid to check for hot particles. Remove any activated or highly radioactive particles from HI-TRAC or MPC.

j. Visually verify that the MPC lid is properly seated. Lower HI-TRAC, reinstall the lid, and repeat as necessary.

k. Install the Lid Retention System bolts if the lid retention system is used.

l. Continue to raise the HI-TRAC under the direction of the plant's radiological control personnel. Continue rinsing the surfaces with demineralized water. When the top of the HI-TRAC reaches the same elevation as the reservoir, close the Annulus Overpressure System reservoir valve (if used). See Figure 8.1.14.

Caution:

Users are required to take necessary actions to prevent boiling of the water in the MPC. This may be accomplished by performing a site-specific analysis to identify a time limitation to ensure that water boiling will not occur in the MPC prior to the initiation of draining operations. Chapter 4 of the FSAR provides some sample time limits for the time to initiation of draining for various spent fuel pool water temperatures using design basis heat loads. These time limits may be adopted if the user chooses not to perform a site-specific analysis. If time limitations are imposed, users shall have appropriate procedures and equipment to take action. One course of action involves initiating an MPC water flush for a certain duration and flow rate. Any site-specific analysis shall identify the methods to respond should it become likely that the imposed time limit could be exceeded. Refer to Tables 2.1.14 and 2.1.16 for boron concentration requirements whenever water is added to the loaded MPC.

m. Remove HI-TRAC from the spent fuel pool while spraying the surfaces with plant demineralized water. Record the time.

ALARA Note:

Decontamination of HI-TRAC bottom should be performed using remote cleaning methods, covering or other methods to minimize personnel exposure. The bottom lid decontamination may be deferred to a convenient and practical time and location. Any initial decontamination should only be sufficient to preclude spread of contamination within the fuel building.

n. Decontaminate HI-TRAC bottom and HI-TRAC exterior surfaces including the pool lid bottom. Remove the bottom protective cover, if used.

o. If used, disconnect the Annulus Overpressure System from the HI-TRAC See Figure 8.1.14.

HOLTEC INTERNATIONAL COPYRIGHTED MATERIAL

p. Set HI-TRAC in the designated cask preparation area.

Note:
If the transfer cask is expected to be operated in an environment below 32 °F, the water jacket shall be filled with an ethylene glycol solution (25% ethylene glycol). Otherwise, the jacket shall be filled with demineralized water. Depending on weight limitations, the neutron shield jacket may remain filled (with pure water or 25% ethylene glycol solution, as required). Users shall evaluate the cask weights to ensure that cask trunnion, lifting devices and equipment load limitations are not exceeded.

q. If previously drained, fill the neutron shield jacket with plant demineralized water or an ethylene glycol solution (25% ethylene glycol) as necessary.

r. Disconnect the lifting slings or Lid Retention System (if used) from the MPC lid and disengage the lift yoke. Decontaminate and store these items in an approved storage location.

Warning:
MPC lid dose rates are measured to ensure that dose rates are within expected values. Dose rates exceeding the expected values could indicate that fuel assemblies not meeting the CoC may have been loaded.

s. Measure the dose rates at the MPC lid and verify that the combined gamma and neutron dose is below expected values.

t. Perform decontamination and a dose rate/contamination survey of HI-TRAC.

u. Prepare the MPC annulus for MPC lid welding as follows:

ALARA Note:
If the Temporary Shield Ring is not used, some form of gamma shielding (e.g., lead bricks or blankets) should be placed in the trunnion recess areas of the HI-TRAC water jacket to eliminate the localized hot spot.

v. Decontaminate the area around the HI-TRAC top flange and install the Temporary Shield Ring, (if used). See Figure 8.1.18.

ALARA Note:
The water in the HI-TRAC-to-MPC annulus provides personnel shielding. The level should be checked periodically and refilled accordingly.

w. Attach the drain line to the HI-TRAC drain port and lower the annulus water level approximately 6 inches.

2. Prepare for MPC lid welding as follows:

HOLTEC INTERNATIONAL COPYRIGHTED MATERIAL

Note:

The following steps use two identical Removable Valve Operating Assemblies (RVOAs) (See Figure 8.1.16) to engage the MPC vent and drain ports. The MPC vent and drain ports are equipped with metal-to-metal seals to minimize leakage during drying, and to withstand the long-term effects of temperature and radiation. The RVOAs allow the vent and drain ports to be operated like valves and prevent the need to hot tap into the penetrations during unloading operations. The RVOAs are purposely not installed until the cask is removed from the spent fuel pool to reduce the amount of decontamination.

Note:

The vent and drain ports are opened by pushing the RVOA handle down to engage the square nut on the cap and turning the handle fully in the counter-clockwise direction. The handle will not turn once the port is fully open. Similarly, the vent and drain ports are closed by turning the handle fully in the clockwise direction. The ports are closed when the handle cannot be turned further.

Note:

Steps involving preparation for welding may occur in parallel as long as precautions are taken to prevent contamination of the annulus.

a. Clean the vent and drain ports to remove any dirt. Install the RVOAs (See Figure 8.1.16) to the vent and drain ports leaving caps open.

ALARA Warning:

Personnel should remain clear of the drain hoses any time water is being pumped or purged from the MPC. Assembly crud, suspended in the water, may create a radiation hazard to workers. Controlling the amount of water pumped from the MPC prior to welding keeps the fuel assembly cladding covered with water yet still allows room for thermal expansion.

b. Attach the water pump to the drain port (See Figure 8.1.19) and lower the water level to keep moisture away from the weld region.

c. Disconnect the water pump.

d. Carefully decontaminate the MPC lid top surface and the shell area above the inflatable seal

e. Deflate and remove the inflatable annulus seal.

ALARA Note:

The MPC exterior shell survey is performed to evaluate the performance of the inflatable annulus seal. Indications of contamination could require the MPC to be unloaded. In the event that the MPC shell is contaminated, users must decontaminate the annulus. If the contamination cannot be reduced to acceptable levels, the MPC must be returned to the spent fuel pool and unloaded. The MPC may then be removed and the external shell decontaminated.

HOLTEC INTERNATIONAL COPYRIGHTED MATERIAL

f. Survey the MPC lid top surfaces and the accessible areas of the top three inches of the MPC.

ALARA Note:
The annulus shield is used to prevent objects from being dropped into the annulus and helps reduce dose rates directly above the annulus region. The annulus shield is hand installed and requires no tools.

g. Install the annulus shield. See Figure 8.1.13.

3. Weld the MPC lid as follows:

ALARA Warning:
Grinding of MPC welds may create the potential for contamination. All grinding activities shall be performed under the direction of radiation protection personnel.

ALARA Warning:
It may be necessary to rotate or reposition the MPC lid slightly to achieve uniform weld gap and lid alignment. A punch mark is located on the outer edge of the MPC lid and shell. These marks are aligned with the alignment mark on the top edge of the HI-TRAC Transfer Cask (See Figure 8.1.8). If necessary, the MPC lid lift should be performed using a hand operated chain fall to closely control the lift to allow rotation and repositioning by hand. If the chain fall is hung from the crane hook, the crane should be tagged out of service to prevent inadvertent use during this operation. Continuous radiation monitoring is recommended.

a. If necessary center the lid in the MPC shell using a hand-operated chain fall.

Note:
The MPC is equipped with lid shims that serve to close the gap in the joint for MPC lid closure weld.

b. As necessary, install the MPC lid shims around the MPC lid to make the weld gap uniform.

ALARA Note:
The AWS Baseplate shield is used to further reduce the dose rates to the operators working around the top cask surfaces.

c. Install the Automated Welding System baseplate shield. See Figure 8.1.9 for rigging.

d. If used, install the Automated Welding System Robot.

Note:
It may be necessary to remove the RVOAs to allow access for the automated welding system. In this event, the vent and drain port caps should be opened to allow for thermal expansion of the MPC water.

HOLTEC INTERNATIONAL COPYRIGHTED MATERIAL

Note:

Combustible gas monitoring as described in Step 3e and the associated Caution block are required by the HI-STORM 100 CoC (CoC Appendix B, Section 3.8) and may not be deleted without prior NRC approval via CoC amendment.

Caution:

Oxidation of Boral panels contained in the MPC may create hydrogen gas while the MPC is filled with water. Appropriate monitoring for combustible gas concentrations shall be performed prior to, and during MPC lid welding operations. The space below the MPC lid shall be exhausted or purged with inert gas prior to, and during MPC lid welding operations to provide additional assurance that flammable gas concentrations will not develop in this space.

e. Perform combustible gas monitoring and exhaust or purge the space under the MPC lid with an inert gas to ensure that there is no combustible mixture present in the welding area.

f. Perform the MPC lid-to-shell weld and NDE with approved procedures (See 9.1 and Table 2.2.15).

g. Deleted.

h. Deleted.

i. Deleted.

j. Deleted.

4. Perform MPC Lid-to-Shell weld pressure testing as follows:

ALARA Note:

Testing is performed before the MPC is drained for ALARA reasons. A weld repair is a lower dose activity if water remains inside the MPC.

a. If performing a hydrostatic test, attach the drain line to the vent port and route the drain line to the spent fuel pool or the plant liquid radwaste system and connect the pressurized water supply to the drain port. If performing a pneumatic test, attach the pressure supply and vent line to the vent port and route the vent line to a suitable radwaste connection. See Figure 8.1.20 for the pressure test arrangement.

ALARA Warning:

Water flowing from the MPC may carry activated particles and fuel particles. Apply appropriate ALARA practices around the drain line.

HOLTEC INTERNATIONAL COPYRIGHTED MATERIAL

b. If performing a hydrostatic test, fill the MPC with either spent fuel pool water or plant demineralized water until water is observed flowing out of the vent port drain hose. Refer to Tables 2.1.14 and 2.1.16 for boron concentration requirements.

c. Perform the pressure test of the MPC as follows:

1. Close the drain/vent valve and pressurize the MPC to minimum test pressure listed in Table 2.0.1 +5/-0 psig.

2. Close the supply valve and monitor the pressure for a minimum of 10 minutes. The pressure shall not drop during the performance of the test.

3. Following the 10-minute hold period, visually examine the MPC lid-to-shell weld for leakage of water (hydrostatic test) or helium using a bubble test solution (pneumatic test). The acceptance criteria is no observable leakage.

d. Release the MPC internal pressure, disconnect the inlet line and drain line from the vent and drain port RVOAs leaving the vent and drain port caps open.

1. Repeat the liquid penetrant examination on the MPC lid final pass.

e. Repair any weld defects in accordance with the site's approved weld repair procedures. Reperform the Ultrasonic (if necessary), PT, and pressure tests if weld repair is performed.

5. Drain the MPC as follows:

a. Attach the drain line to the vent port and route the drain line to the spent fuel pool or the plant liquid radwaste system. See Figure 8.1.20.

ALARA Warning:
Water flowing from the MPC may carry activated particles and fuel particles. Apply appropriate ALARA practices around the drain line.

b. Attach the water fill line to the drain port and fill the MPC with either spent fuel pool water or plant demineralized water until water is observed flowing out of the drain line.

c. Disconnect the water fill and drain lines from the MPC leaving the vent port valve open to allow for thermal expansion of the MPC water.

ALARA Warning:
Dose rates will rise as water is drained from the MPC. Continuous dose rate monitoring is recommended.

d. Attach a regulated helium or nitrogen supply to the vent port.

e. Attach a drain line to the drain port shown on Figure 8.1.21.

f. Deleted

HOLTEC INTERNATIONAL COPYRIGHTED MATERIAL

g. Verify the correct pressure on the gas supply.

h. Open the gas supply valve and record the time at the start of MPC draining.

Note:
An optional warming pad may be placed under the HI-TRAC Transfer Cask to replace the heat lost during the evaporation process of MPC drying. This may be used at the user's discretion for older and colder fuel assemblies to reduce vacuum drying times.

i. Start the warming pad, if used.

Note:
Users may continue to purge the MPC to remove as much water as possible.

j. Drain the water out of the MPC until water ceases to flow out of the drain line. Shut the gas supply valve. See Figure 8.1.21.

k. Deleted.

l. Disconnect the gas supply line from the MPC.

m. Disconnect the drain line from the MPC.

Note:
Vacuum drying or moisture removal using FHD (for high burn-up fuel) is performed to remove moisture and oxidizing gasses from the MPC. This ensures a suitable environment for long-term storage of spent fuel assemblies and ensures that the MPC pressure remains within design limits. The vacuum drying process described herein reduces the MPC internal pressure in stages. Dropping the internal pressure too quickly may cause the formation of ice in the fittings. Ice formation could result in incomplete removal of moisture from the MPC. The moisture removal process limits bulk MPC temperatures by continuously circulating gas through the MPC. Section 8.1.5 Steps 6a through o are used for the vacuum drying method of drying and backfill. Section 8.1.5 Steps 7a through i are used for the FHD method of drying and backfill.

6. Dry and Backfill the MPC as follows (Vacuum Drying Method):

a. Attach the drying system (VDS) to the vent and drain port RVOAs. See Figure 8.1.22a. Other equipment configurations that achieve the same results may also be used.

Note:
The vacuum drying system may be configured with an optional fore-line condenser. Other equipment configurations that achieve the same results may be used.

HOLTEC INTERNATIONAL COPYRIGHTED MATERIAL

Note:
To prevent freezing of water, the MPC internal pressure should be lowered in incremental steps. The vacuum drying system pressure will remain at about 30 torr until most of the liquid water has been removed from the MPC.

b. Open the VDS suction valve and reduce the MPC pressure to below 3 torr.

c. Shut the VDS valves and verify a stable MPC pressure on the vacuum gage.

Note:
The MPC pressure may rise due to the presence of water in the MPC. The dryness test may need to be repeated several times until all the water has been removed. Leaks in the vacuum drying system, damage to the vacuum pump, and improper vacuum gauge calibration may cause repeated failure of the dryness verification test. These conditions should be checked as part of the corrective actions if repeated failure of the dryness verification test is occurring.

d. Perform the MPC drying pressure test in accordance with the technical specifications.

e. Close the vent and drain port valves.

f. Disconnect the VDS from the MPC.

g. Stop the warming pad, if used.

h. Close the drain port RVOA cap and remove the drain port RVOA.

Note:
Helium backfill shall be in accordance with the Technical Specification using 99.995% (minimum) purity. Other equipment configurations that achieve the same results may be used.

i. Set the helium bottle regulator pressure to the appropriate pressure.

j. Purge the Helium Backfill System to remove oxygen from the lines.

k. Attach the Helium Backfill System to the vent port as shown on Figure 8.1.23 and open the vent port.

l. Slowly open the helium supply valve while monitoring the pressure rise in the MPC.

Note:
If helium bottles need to be replaced, the bottle valve needs to be closed and the entire regulator assembly transferred to the new bottle.

m. Carefully backfill the MPC in accordance with the technical specifications

n. Disconnect the helium backfill system from the MPC.

o. Close the vent port RVOA and disconnect the vent port RVOA.

7. Dry and Backfill the MPC as follows (FHD Method)::

HOLTEC INTERNATIONAL COPYRIGHTED MATERIAL

Note:
Helium backfill shall be in accordance with the Technical Specification using 99.995% (minimum) purity. When using the FHD system to perform the MPC helium backfill, the FHD system shall be evacuated or purged and the system operated with 99.995% (minimum) purity helium.

a. Attach the moisture removal system to the vent and drain port RVOAs. See Figure 8.1.22b. Other equipment configurations that achieve the same results may also be used.

b. Circulate the drying gas through the MPC while monitoring the circulating gas for moisture. Collect and remove the moisture from the system as necessary.

c. Continue the monitoring and moisture removal until LCO 3.1.1 is met for MPC dryness.

d. Continue operation of the FHD system with the demoisturizer on.

e. While monitoring the temperatures into and out of the MPC, adjust the helium pressure in the MPC to provide a fill pressure as required by the technical specifications.

f. Open the FHD bypass line and Close the vent and drain port RVOAs.

g. Close the vent and drain port RVOAs.

h. Shutdown the FHD system and disconnect it from the RVOAs.

i. Remove the vent and drain port RVOAs.

8. Weld the vent and drain port cover plates as follows:

Note:
The process provided herein may be modified to perform actions in parallel.

a. Wipe the inside area of the vent and drain port recesses to dry and clean the surfaces.

b. Place the cover plate over the vent port recess.

c. Deleted.

Note:
ASME Boiler and Pressure Vessel Code [8.1.3], Section V, Article 6 provides the liquid penetrant inspection methods. The acceptance standards for liquid penetrant examination shall be in accordance with ASME Boiler and Pressure Vessel Code, Section III, Subsection NB, Article NB-5350 as specified on the Design Drawings. ASME Code, Section III, Subsection NB, Article NB-4450 provides acceptable requirements for weld repair. NDE personnel shall be qualified per the requirements of Section V of the Code or site-specific program.

HOLTEC INTERNATIONAL COPYRIGHTED MATERIAL

d. Weld cover plate and perform NDE on the cover plate with approved procedures (See 9.1 and Table 2.2.15)

e. Repair and weld defects in accordance with the site's approved code weld repair procedures.

f. Deleted.

g. Deleted.

h. Deleted.

i. Repeat for the drain port cover plate.

9. Perform a leakage test of the MPC vent and drain port cover plates as follows:

Note:
The leakage detector may detect residual helium in the atmosphere from the helium injection process. If the leakage tests detect a leak, the area should be blown clear with compressed air or nitrogen and the location should be retested.
Note:
The following process provides a high concentration of helium gas in the cavity. Other methods that ensure a high concentration of helium gas are also acceptable.

a. If necessary, remove the cover plate set screws.

b. Flush the cavity with helium to remove the air and immediately install the set screws recessed ¼ inch below the top of the cover plate.

c. Plug weld the recess above each set screw to complete the penetration closure welding.

Note:
ASME Boiler and Pressure Vessel Code [8.1.3], Section V, Article 6 provides the liquid penetrant inspection methods. The acceptance standards for liquid penetrant examination shall be in accordance with ASME Boiler and Pressure Vessel Code, Section III, Subsection NB, Article NB-5350 as specified on the Design Drawings. ASME Code, Section III, Subsection NB, Article NB-4450 provides acceptable requirements for weld repair. NDE personnel shall be qualified per the requirements of Section V of the Code or site-specific program.

d. Perform a liquid penetrant examination on the plug weld.

e. Flush the area around the vent and drain cover plates with compressed air or nitrogen to remove any residual helium gas.

f. Perform a helium leakage rate test of vent and drain cover plate welds in accordance with the Mass Spectrometer Leak Detector (MSLD) manufacturer's instructions and ANSI N14.5 [8.1.2]. The MPC Helium Leak Rate acceptance criteria is provided in the Technical Specification LCO 3.1.1.

g. Repair any weld defects in accordance with the site's approved code weld repair procedures. Re-perform the leakage test as required.

HOLTEC INTERNATIONAL COPYRIGHTED MATERIAL

10. Weld the MPC closure ring as follows:

ALARA Note:
The closure ring is installed by hand. No tools are required. Localized grinding to achieve the desired fit and weld prep are allowed.

a. Install and align the closure ring. See Figure 8.1.8.

b. Weld the closure ring to the MPC shell and the MPC lid, and perform NDE with approved procedures (See 9.1 and Table 2.2.15).

c. Deleted.

d. Deleted.

e. Deleted.

f. Deleted.

g. Deleted.

h. Deleted.

i. Deleted.

j. If necessary, remove the AWS. See Figure 8.1.7 for rigging.

8.1.6 Preparation for Storage

ALARA Warning:
Dose rates will rise around the top of the annulus as water is drained from the annulus. Apply appropriate ALARA practices.
Caution:
Limitations for the handling an MPC containing high burn-up fuel in a HI-TRAC are evaluated and established on a canister basis to ensure that acceptable cladding temperatures are not exceeded. Refer to FSAR Section 4.5 for guidance.

1. Remove the annulus shield (if used) and store it in an approved plant storage location

2. If use of the SCS is not required, attach a drain line to the HI-TRAC and drain the remaining water from the annulus to the spent fuel pool or the plant liquid radwaste system.

3. Install HI-TRAC top lid as follows:

Warning:
When traversing the MPC with the HI-TRAC top lid using non-single-failure proof (or equivalent safety factors), the lid shall be kept less than 2 feet above the top surface of the MPC. This is performed to protect the MPC lid from a potential lid drop.

a. Install HI-TRAC top lid. Inspect the bolts for general condition. Replace worn or damaged bolts with new bolts.

b. Install and torque the top lid bolts. See Table 8.1.5 for torque requirements.

HOLTEC INTERNATIONAL COPYRIGHTED MATERIAL

c. Inspect the lift cleat bolts for general condition. Replace worn or damaged bolts with new bolts.

d. Install the MPC lift cleats and MPC slings. See Figure 8.1.24 and 8.1.25. See Table 8.1.5 for torque requirements.

e. Drain and remove the Temporary Shield Ring, if used.

4. Replace the pool lid with the transfer lid as follows (Not required for HI-TRAC 100D and 125D):

ALARA Note:

The transfer slide is used to perform the bottom lid replacement and eliminate the possibility of directly exposing the bottom of the MPC. The transfer slide consists of the guide rails, rollers, transfer step and carriage. The transfer slide carriage and jacks are powered and operated by remote control. The carriage consists of short-stroke hydraulic jacks that raise the carriage to support the weight of the bottom lid. The transfer step produces a tight level seam between the transfer lid and the pool lid to minimize radiation streaming. The transfer slide jacks do not have sufficient lift capability to support the entire weight of the HI-TRAC. This was selected specifically to limit floor loads. Users should designate a specific area that has sufficient room and support for performing this operation.

Note:

The following steps are performed to pretension the MPC slings.

a. Lower the lift yoke and attach the MPC slings to the lift yoke. See Figure 8.1.25.

b. Raise the lift yoke and engage the lift yoke to the HI-TRAC lifting trunnions.

c. If necessary, position the transfer step and transfer lid adjacent to one another on the transfer slide carriage. See Figure 8.1.26. See Figure 8.1.9 for transfer step rigging.

d. Deleted.

e. Position HI-TRAC with the pool lid centered over the transfer step approximately one inch above the transfer step.

f. Raise the transfer slide carriage so the transfer step is supporting the pool lid bottom. Remove the bottom lid bolts and store them temporarily.

ALARA Warning:

Clear all personnel away from the immediate operations area. The transfer slide carriage and jacks are remotely operated. The carriage has fine adjustment features to allow precise positioning of the lids.

g. Lower the transfer carriage and position the transfer lid under HI-TRAC.

h. Raise the transfer slide carriage to place the transfer lid against the HI-TRAC bottom lid bolting flange.

HOLTEC INTERNATIONAL COPYRIGHTED MATERIAL

i. Inspect the transfer lid bolts for general condition. Replace worn or damaged bolts with new bolts.

j. Install the transfer lid bolts. See Table 8.1.5 for torque requirements.

k. Raise and remove the HI-TRAC from the transfer slide.

l. Disconnect the MPC slings and store them in an approved plant storage location.

Note:
HI-STORM receipt inspection and preparation may be performed independent of procedural sequence.

5. Perform a HI-STORM receipt inspection and cleanliness inspection in accordance with a site-approved inspection checklist, if required. See Figure 8.1.27 for HI-STORM lid rigging.

Note:
MPC transfer may be performed in the truck bay area, at the ISFSI, or any other location deemed appropriate by the licensee. The following steps describe the general transfer operations (See Figure 8.1.28). The HI-STORM may be positioned on an air pad, roller skid in the cask receiving area or at the ISFSI. The HI-STORM or HI-TRAC may be transferred to the ISFSI using a heavy haul transfer trailer, special transporter or other equipment specifically designed for such a function (See Figure 8.1.29) as long as the HI-TRAC and HI-STORM lifting requirements are not exceeded. The licensee is responsible for assessing and controlling floor loading conditions during the MPC transfer operations. Installation of the lid, vent screen, and other components may vary according to the cask movement methods and location of MPC transfer.

8.1.7 Placement of HI-STORM into Storage

1. Position an empty HI-STORM module at the designated MPC transfer location. The HI-STORM may be positioned on the ground, on a deenergized air pad, on a roller skid, on a flatbed trailer or other special device designed for such purposes. If necessary, remove the exit vent screens and gamma shield cross plates ,temperature elements and the HI-STORM lid. See Figure 8.1.28 for some of the various MPC transfer options.

   a. Rinse off any road dirt with water. Inspect all cavity locations for foreign objects. Remove any foreign objects.

   b. Transfer the HI-TRAC to the MPC transfer location.

2. De-energize the air pad or chock the vehicle wheels to prevent movement of the HI-STORM during MPC transfer and to maintain level, as required.

ALARA Note:
The HI-STORM vent duct shield inserts eliminate the streaming path created when the MPC is transferred past the exit vent ducts. Vent duct shield inserts are not used with the HI-STORM 100S.

HOLTEC INTERNATIONAL COPYRIGHTED MATERIAL

3. Install the alignment device (or mating device for HI-TRAC 100D and 125D) and if necessary, install the HI-STORM vent duct shield inserts. See Figure 8.1.30.

Caution:
For MPCs with high burn-up fuel requiring supplemental cooling, the time to complete the transfer may be limited to prevent fuel cladding temperatures in excess of ISG-11 Rev. 3 limits. (See Section 4.5) All preparatory work related to the transfer should be completed prior to terminating the supplemental cooling operations.

4. If used, discontinue the supplemental cooling operations and disconnect the SCS. Drain water from the HI-TRAC annulus to an appropriate plant discharge point.
5. Position HI-TRAC above HI-STORM. See Figure 8.1.28.
6. Align HI-TRAC over HI-STORM (See Figure 8.1.31) and mate the overpacks.
7. If necessary, attach the MPC Downloader. See Figure 8.1.32.
8. Attach the MPC slings to the MPC lift cleats.
9. Raise the MPC slightly to remove the weight of the MPC from the transfer lid doors (or pool lid for HI-TRAC 100D and 125D and mating device)
10. If using the HI-TRAC 100D or 125D, unbolt the pool lid from the HI-TRAC.
11. Remove the transfer lid door (or mating device drawer) locking pins and open the doors (or drawer).

ALARA Warning:
MPC trim plates are used to eliminate the streaming path above and below the doors (or drawer). If trim plates are not used, personnel should remain clear of the immediate door area during MPC downloading since there may be some radiation streaming during MPC raising and lowering operations.

12. At the user's discretion, install trim plates to cover the gap above and below the door/drawer. The trim plates may be secured using hand clamps or any other method deemed suitable by the user. See Figure 8.1.33.
13. Lower the MPC into HI-STORM.
14. Disconnect the slings from the MPC lifting device and lower them onto the MPC lid.
15. Remove the trim plates (if used), and close the doors (or mating device drawer)

ALARA Warning:
Personnel should remain clear (to the maximum extent practicable) of the HI-STORM annulus when HI-TRAC is removed due to radiation streaming.

HOLTEC INTERNATIONAL COPYRIGHTED MATERIAL

Note:
It may be necessary, due to site-specific circumstances, to move HI-STORM from under the empty HI-TRAC to install the HI-STORM lid, while inside the Part 50 facility. In these cases. users shall evaluate the specifics of their movements within the requirements of their Part 50 license.

16. Remove HI-TRAC from on top of HI-STORM.

17. Remove the MPC lift cleats and MPC slings and install hole plugs in the empty MPC bolt holes. See Table 8.1.5 for torque requirements.

18. Place HI-STORM in storage as follows:

    a. Remove the alignment device (mating device with HI-TRAC pool lid for HI-TRAC 100D and 125D) and vent duct shield inserts (if used). See Figure 8.1.30.

    b. Inspect the HI-STORM lid studs and nuts or lid closure bolts for general condition. Replace worn or damaged components with new ones.

    c. If used, inspect the HI-STORM 100A anchor components for general condition. Replace worn or damaged components with new ones.

    d. Deleted.

Warning:
Unless the lift is single failure proof (or equivalent safety factor) for the HI-STORM Lid, the lid shall be kept less than 2 feet above the top surface of the overpack. This is performed to protect the MPC lid from a potential HI-STORM 100 lid drop.

Note:
Shims may be used on the HI-STORM 100 lid studs. If used, the shims shall be positioned to ensure a radial gap of less than 1/8 inch around each stud. The method of cask movement will determine the most effective sequence for vent screen, lid, temperature element, and vent gamma shield cross plate installation.

    e. Install the HI-STORM lid and the lid studs and nuts or lid closure bolts. See Table 8.1.5 for bolting requirements. Install the HI-STORM 100 lid stud shims if necessary. See Figure 8.1.27 for rigging.

    f. Install the HI-STORM exit vent gamma shield cross plates, temperature elements (if used) and vent screens. See Table 8.1.5 for torque requirements. See Figure 8.1.34a and 8.1.34b.

    g. Remove the HI-STORM lid lifting device and install the hole plugs in the empty holes. Store the lifting device in an approved plant storage location. See Table 8.1.5 for torque requirements.

    h. Secure HI-STORM to the transporter device as necessary.

19. Perform a transport route walkdown to ensure that the cask transport conditions are met.

HOLTEC INTERNATIONAL COPYRIGHTED MATERIAL

20. Transfer the HI-STORM to its designated storage location at the appropriate pitch. See Figure 8.1.35.

Note:
Any jacking system shall have the provisions to ensure uniform loading of all four jacks during the lifting operation.

a. If air pads were used, insert the HI-STORM lifting jacks and raise HI-STORM. See Figure 8.1.36. Remove the air pad.

b. Lower and remove the HI-STORM lifting jacks, if used.

c. For HI-STORM 100A overpack (anchored), perform the following:

1. Inspect the anchor stud receptacles and verify that they are clean and ready for receipt of the anchor hardware.
2. Align the overpack over the anchor location.
3. Lower the overpack to the ground while adjusting for alignment.
4. Install the anchor connecting hardware (See Table 8.1.5 for torque requirements).

21. Install the HI-STORM inlet vent gamma shield cross plates and vent screens. See Table 8.1.5 for torque requirements. See Figure 8.1.34.

22. Perform shielding effectiveness testing.

23. Perform an air temperature rise test as follows for the first HI-STORM 100 System placed in service:

Note:
The air temperature rise test shall be performed between 5 and 7 days after installation of the HI-STORM 100 lid to allow thermal conditions to stabilize. The purpose of this test is to confirm the initial performance of the HI-STORM 100 ventilation system.

a. Measure the inlet air (or screen surface) temperature at the center of each of the four vent screens. Determine the average inlet air (or surface screen) temperature.

b. Measure the outlet air (or screen surface) temperature at the center of each of the four vent screens. Determine the average outlet air (or surface screen) temperature.

c. Determine the average air temperature rise by subtracting the results of the average inlet screen temperature from the average outlet screen temperature.

d. Report the results to the certificate holder.

HOLTEC INTERNATIONAL COPYRIGHTED MATERIAL

Table 8.1.1
ESTIMATED HANDLING WEIGHTS OF HI-STORM 100 SYSTEM COMPONENTS
125-TON HI-TRAC**

Component	MPC-24 (Lbs.)	MPC-32 (Lbs.)	MPC-68 (Lbs.)	Case† Applicability					
				1	2	3	4	5	6
Empty HI-STORM 100 overpack (without lid)††	245,040	245,040	245,040					1	
HI-STORM 100 lid (without rigging)	23,963	23,963	23,963					1	
Empty HI-STORM 100S (Short) overpack (without lid)††	275,000	275,000	275,000					1	
Empty HI-STORM 100S (Tall) overpack (without lid) ††	290,000	290,000	290,000					1	
HI-STORM 100S lid (without rigging. Add 1,000 lbs for 100S Version B Lid)	28,000	28,000	28,000					1	
Empty MPC (without lid or closure ring including drain line)	29,845	24,503	29,302	1	1	1	1	1	1
MPC lid (without fuel spacers or drain line)	9,677	9,677	10,194	1	1	1	1	1	1
MPC Closure Ring	145	145	145			1	1	1	1
Fuel (design basis)	40,320	53,760	47,600	1	1	1	1	1	1
Damaged Fuel Container (Dresden 1)	0	0	150						
Damaged Fuel Container (Humboldt Bay)	0	0	120						
MPC water (with fuel in MPC)	17,630	17,630	16,957	1	1				
Annulus Water	256	256	256	1	1				
HI-TRAC Lift Yoke (with slings)	4,200	4,200	4,200	1	1	1			
Annulus Seal	50	50	50	1	1				
Lid Retention System	2,300	2,300	2,300						
Transfer frame	6,700	6,700	6,700						1
Mating Device	15,000	15,000	15,000						
Empty HI-TRAC 125 (without Top Lid, neutron shield jacket water, or bottom lids)	117,803	117,803	117,803	1	1	1			1
Empty HI-TRAC 125D (without Top Lid, neutron shield jacket water, or bottom lids)	122,400	122,400	122,400	1	1	1			1
HI-TRAC 125 Top Lid	2,745	2,745	2,745			1			1
HI-TRAC 125D Top Lid	2,645	2,645	2,645			1			1
Optional HI-TRAC Lid Spacer (weight lbs/in thickness)	400	400	400						
HI-TRAC 125/125D Pool Lid(with bolts)	11,900	11,900	11,900	1	1				
HI-TRAC Transfer Lid (with bolts) (125 Only)	23,437	23,437	23,437			1			1
HI-TRAC 125 Neutron Shield Jacket Water	8,281	8,281	8,281		1	1			1
HI-TRAC 125 D Neutron Shield Jacket Water	9,000	9,000	9,000		1	1			1
MPC Stays (total of 2)	200	200	200						
MPC Lift Cleat	480	480	480			1	1		1

** Actual component weights are dependant upon as-built dimensions. The values provided herein are estimated. FSAR analyses use bounding values provided elsewhere. Users are responsible for ensuring lifted loads meet site capabilities and requirements.

† See Table 8.1.2 for a description of each load handling case.

†† Short refers to both 100S-232 and 100S Version B-219. Tall refers to both 100S-243 and 100S Version B-229. Weights are based on 200 lb/cf concrete. Add an additional 1955 lbs. for the HI-STORM 100A overpack.

HOLTEC INTERNATIONAL COPYRIGHTED MATERIAL

TABLE 8.1.2
ESTIMATED HANDLING WEIGHTS
125-TON HI-TRAC**

Caution:
The maximum weight supported by the 125-Ton HI-TRAC lifting trunnions cannot exceed 250,000 lbs. Users must take actions to ensure that this limit is not exceeded.

Note:
The weight of the fuel spacers and the damaged fuel container are less than the weight of the design basis fuel assembly for each MPC and are therefore not included in the maximum handling weight calculations. Fuel spacers are determined to be the maximum combination weight of fuel + spacer. Users should determine their specific handling weights based on the MPC contents and the expected handling modes.

Case No.	Load Handling Evolution	Weight (lbs)		
		MPC-24	MPC-32	MPC-68
1	Loaded HI-TRAC 125 removal from spent fuel pool (neutron tank empty)	231,700	239,700	238,200
2	Loaded HI-TRAC 125 removal from spent fuel pool (neutron tank full)	239,900	248,000	246,500
3	Loaded HI-TRAC 125 During Movement through Hatchway	236,900	244,700	244,100
1A	Loaded HI-TRAC 125D removal from spent fuel pool (neutron tank empty)	236,400	244,500	243,000
2A	Loaded HI-TRAC 125D removal from spent fuel pool (neutron tank full)	245,400	253,500	252,000
3A	Loaded HI-TRAC 125D During Movement through Hatchway	230,900	238,700	238,100
4	MPC during transfer operations	80,467	88,315	87,721
5A	Loaded HI-STORM 100 in storage (See Second Note to Table 8.1.1)	348,990	357,088	356,244
5B	Loaded HI-STORM 100S (Short) in storage (See Second Note to Table 8.1.1)	380,500	388,600	387,800
5C	Loaded HI-STORM 100S (Tall) in storage (See Second Note to Table 8.1.1)	395,500	403,600	402,800
6	Loaded HI-TRAC and transfer frame during on site handling	239,434	247,282	246,688

** Actual component weights are dependant upon as-built dimensions. The values provided herein are estimated. FSAR analyses use bounding values provided elsewhere. Users are responsible for ensuring lifted loads meet site capabilities and requirements.

HOLTEC INTERNATIONAL COPYRIGHTED MATERIAL

Table 8.1.3
ESTIMATED HANDLING WEIGHTS OF HI-STORM 100 SYSTEM COMPONENTS
100-TON HI-TRAC**

Component	MPC-24 (Lbs.)	MPC-32 (Lbs.)	MPC-68 (Lbs.)	Case† Applicability					
				1	2	3	4	5	6
Empty HI-STORM 100 overpack (without lid)††	245,040	245,040	245,040					1	
HI-STORM 100 lid (without rigging)	23,963	23,963	23,963					1	
Empty HI-STORM 100S (Short) overpack (without lid)††	275,000	275,000	275,000					1	
Empty HI-STORM 100S (Tall) overpack (without lid)††	290,000	290,000	290,000					1	
HI-STORM 100S lid (without rigging, add 1,000 lbs for 100S Version B Lid)	28,000	28,000	28,000						
Empty MPC (without lid or closure ring including drain line)	29,845	24,503	29,302	1	1	1	1	1	1
MPC lid (without fuel spacers or drain line)	9,677	9,677	10,194	1	1	1	1	1	1
MPC Closure Ring	145	145	145			1	1	1	1
Fuel (design basis)	40,320	53,760	47,600	1	1	1	1	1	1
Damaged Fuel Container (Dresden 1)	0	0	150						
Damaged Fuel Container (Humboldt Bay)	0	0	120						
MPC water (with fuel in MPC)	17,630	17,630	16,957	1	1				
Annulus Water	256	256	256	1	1				
HI-TRAC Lift Yoke (with slings)	3,200	3,200	3,200	1	1	1			
Annulus Seal	50	50	50	1	1				
Lid Retention System	2,300	2,300	2,300						
Transfer frame	6,700	6,700	6,700						1
Empty HI-TRAC 100 (without Top Lid, neutron shield jacket water, or bottom lids)	84,003	84,003	84,003	1	1	1			1
HI-TRAC 100 Top Lid	1,189	1,189	1,189			1			1
HI-TRAC 100 Pool Lid (Cases 3 applicable for 100D only)	7,863	7,863	7,863	1	1	1			
HI-TRAC Transfer Lid (HI-TRAC 100 only)	16,686	16,686	16,686			1			1
Empty HI-TRAC 100D (without Top Lid, neutron shield jacket water, or pool lid)	84,204	84,204	84,204	1	1	1			1
HI-TRAC 100D Top Lid	1,239	1,239	1,239			1			1
HI-TRAC 100D Pool Lid	7,955	7,955	7,955	1	1				
Mating Device (HI-TRAC 100D only)	15,000	15,000	15,000						
HI-TRAC 100 Neutron Shield Jacket Water	7,583	7,583	7,583		1	1			1
HI-TRAC 100D Neutron Shield Jacket Water	7,800	7,800	7,800		1	1			1
MPC Stays (total of 2)	200	200	200						
MPC Lift Cleat	480	480	480				1		1

** Actual component weights are dependant upon as-built dimensions. The values provided herein are estimated. FSAR analyses use bounding values provided elsewhere. Users are responsible for ensuring lifted loads meet site capabilities and requirements.

† See Table 8.1.4 for a description of each load handling case.

†† Short refers to both 100S-232 and 100S Version B-219. Tall refers to both 100S-243 and 100S Version B-229. Weights are based on 200 lb/cf concrete. Add an additional 1955 lbs. for the HI-STORM 100A overpack.

HOLTEC INTERNATIONAL COPYRIGHTED MATERIAL

Table 8.1.4
ESTIMATED HANDLING WEIGHTS
100-TON HI-TRAC**

Caution:
The maximum weight supported by the 100-Ton HI-TRAC lifting trunnions cannot exceed 200,000 lbs. Users must take actions to ensure that this limit is not exceeded.

Note:
The weight of the fuel spacers and the damaged fuel container are less than the weight of the design basis fuel assembly and therefore not included in the maximum handling weight calculations. Fuel spacers are determined to be the maximum combination weight of fuel + spacer. Users should determine the handling weights based on the contents to be loaded and the expected mode of operations.

Case No.	Load Handling Evolution	Weight (lbs)		
		MPC-24	MPC-32	MPC-68
1	Loaded HI-TRAC 100 removal from spent fuel pool (neutron tank empty)	192,844	200,942	199,425
2	Loaded HI-TRAC 100 removal from spent fuel pool (neutron tank full)	200,427	208,525	207,008
3	Loaded HI-TRAC 100 During Movement through Hatchway	192,647	200,745	199,901
1A	Loaded HI-TRAC 100D removal from spent fuel pool (neutron tank empty)	193,137	201,235	199,718
2A	Loaded HI-TRAC 100D removal from spent fuel pool (neutron tank full)	200,937	209,035	207,518
3A	Loaded HI-TRAC 100D During Movement through Hatchway	184,385	192,483	191,639
4	MPC during transfer operations	80,467	88,565	87,721
5A	Loaded HI-STORM 100 in storage (See Second Note to Table 8.1.1)	348,990	357,088	356,244
5B	Loaded HI-STORM 100S (Short) in storage (See Second Note to Table 8.1.1)	380,500	388,600	387,800
5C	Loaded HI-STORM 100S (Tall) in storage (See Second Note to Table 8.1.1)	395,500	403,600	402,800
6	Loaded HI-TRAC 100 and transfer frame during on site handling	196,627	204,725	203,881

** Actual component weights are dependant upon as-built dimensions. The values provided herein are estimated. FSAR analyses use bounding values provided elsewhere. Users are responsible for ensuring lifted loads meet site capabilities and requirements.

HOLTEC INTERNATIONAL COPYRIGHTED MATERIAL

Table 8.1.5
HI-STORM 100 SYSTEM TORQUE REQUIREMENTS

Fastener†	**Torque (ft-lbs)** ††	**Pattern**†††
HI-TRAC Top Lid Bolts†	Hand tight	None
HI-TRAC Pool Lid Bolts (36 Bolt Lid)†	Wrench tight	Figure 8.1.37
HI-TRAC Pool Lid Bolts (16 Bolt Lid)†	Wrench tight	Figure 8.1.37
100-Ton HI-TRAC Transfer Lid Bolts†	Wrench tight	Figure 8.1.37
125-Ton HI-TRAC Transfer Lid Bolts†	Wrench tight	Figure 8.1.37
MPC Lift Cleats Stud Nuts†	Wrench tight	None
MPC Lift Hole Plugs†	Hand tight	None
Threaded Fuel Spacers	Hand Tight	None
HI-STORM Lid Nuts †	Hand tight	None
HI-STORM 100S Lid Nuts and Lid Closure Bolts† (Temporary and Permanent Lids, Including Version B)	Hand Tight	None
Door Locking Pins	Hand Tight + 1/8 to 1/2 turn	None
HI-STORM 100 Vent Screen/Temperature Element Screws	Hand Tight	None
HI-STORM 100A Anchor Studs	55- 65 ksi tension applied by bolt tensioner (no initial torque)	None

† Studs and nuts shall be cleaned and inspected for damage or excessive thread wear (replace if necessary) and coated with a light layer of Fel-Pro Chemical Products, N-5000, Nuclear Grade Lubricant (or equivalent).

†† Unless specifically specified, torques have a +/- 5% tolerance.

††† No detorquing pattern is needed.

HOLTEC INTERNATIONAL COPYRIGHTED MATERIAL

Table 8.1.6
HI-STORM 100 SYSTEM ANCILLARY EQUIPMENT OPERATIONAL DESCRIPTION

Equipment	Important To Safety Classification	Reference Figure[†]	Description
Air Pads/Rollers	Not Important To Safety	8.1.29	Used for HI-STORM or HI-TRAC cask positioning. May be used in conjunction with the cask transporter or other HI-STORM 100 or HI-TRAC lifting device.
Annulus Overpressure System	Not Important To Safety	8.1.14	The Annulus Overpressure System is used for protection against spent fuel pool water contamination of the external MPC shell and baseplate surfaces by providing a slight annulus overpressure during in-pool operations.
Annulus Shield	Not Important To Safety	8.1.13	A shield that is placed at the top of the HI-TRAC annulus to provide supplemental shielding to the operators performing cask loading and closure operations.
Automated Welding System	Not Important To Safety	8.1.2b	Used for remote field welding of the MPC.
AWS Baseplate Shield	Not Important To Safety	8.1.2b	Provides supplemental shielding to the operators during the cask closure operations.
Bottom Lid Transfer Slide (Not used with HI-TRAC 100D and 125D)	Not Important To Safety	8.1.26	Used to simultaneously replace the pool lid with the transfer lid under the suspended HI-TRAC and MPC. Used in conjunction with the bottom lid transfer step.
Cask Transporter	Not Important to Safety unless used for MPC transfers	8.1.29a and 8.1.29b	Used for handling of the HI-STORM 100 Overpack and/or the HI-TRAC Transfer Cask around the site. The cask transporter may take the form of heavy haul transfer trailer, special transporter or other equipment specifically designed for such a function.

[†] Figures are representative and may not depict all configurations for all users.

HOLTEC INTERNATIONAL COPYRIGHTED MATERIAL

Table 8.1.6
HI-STORM 100 SYSTEM ANCILLARY EQUIPMENT OPERATIONAL DESCRIPTION
(Continued)

Equipment	Important To Safety Classification	Reference Figure†	Description
Lid and empty component lifting rigging	Not Important To Safety, Rigging shall be provided in accordance with NUREG 0612	8.1.9	Used for rigging such components such as the HI-TRAC top lid, pool lid, MPC lid, transfer lid, AWS, HI-STORM Lid and auxiliary shielding and the empty MPC.
Helium Backfill System	Not Important To Safety	8.1.23	Used for controlled insertion of helium into the MPC for pressure testing, blowdown and placement into storage.
HI-STORM 100 Lifting Jacks	Not Important To Safety	8.1.36	Jack system used for lifting the HI-STORM overpack to provide clearance for inserting or removing a device for transportation. .
Alignment Device	Not Important To Safety	8.1.31	Guides HI-TRAC into place on top of HI-STORM for MPC transfers. (Not used for HI-TRAC 100D and 125D)
HI-STORM Lifting Devices	Determined site-specifically based on type, location, and height of lift being performed. Lifting devices shall be provided in accordance with ANSI N14.6.	Not shown.	A special lifting device used for connecting the crane (or other primary lifting device) to the HI-STORM 100 for cask handling. Does not include the crane hook (or other primary lifting device) device.
HI-STORM Vent Duct Shield Inserts	Important to Safety Category C .	8.1.30	Used for prevention of radiation streaming from the HI-STORM 100 exit vents during MPC transfers to and from HI-STORM. Not used with the HI-STORM 100S.
HI-TRAC Lid Spacer	Spacer Ring is Not-Important-To-Safety, Studs or bolts are I Important to Safety Category B	Not Shown	Optional ancillary which is used during MPC transfer operations to increase the clearance between the top of the MPC and the underside of the HI-TRAC top lid. Longer threaded studs (or bolts), supplied with the lid spacer, replace the standard threaded studs (or bolts) supplied with the HI-TRAC. The HI-TRAC lid spacer may ONLY be used when the HI-TRAC is handled in the vertical orientation or if HI-TRAC transfer lid is NOT used. The height of the spacer shall be limited to ensure that the weights and C.G. heights in a loaded HI-TRAC with the spacer do not exceed the bounding values found in Section 3.2 of the FSAR.
HI-TRAC Lift Yoke/Lifting Links	Determined site-specifically based on type and location, and height of lift being performed. Lift yoke and lifting devices for loaded HI-TRAC handling shall be provided in accordance with ANSI N14.6.	8.1.3	Used for connecting the crane (or other primary lifting device) to the HI-TRAC for cask handling. Does not include the crane hook (or other primary lifting device).

† Figures are representative and may not depict all configurations for all users.

HOLTEC INTERNATIONAL COPYRIGHTED MATERIAL

Table 8.1.6
HI-STORM 100 SYSTEM ANCILLARY EQUIPMENT OPERATIONAL DESCRIPTION
(Continued)

Equipment	Important To Safety Classification	Reference Figure†	Description
HI-TRAC transfer frame	Not Important To Safety	8.1.4	A steel frame used to support HI-TRAC during delivery, on-site movement and upending/downending operations.
Cask Primary Lifting Device (Cask Transfer Facility)	Important to Safety. Quality classification of subcomponents determined site-specifically.	8.1.28 and 8.1.32	Optional auxiliary (Non-Part 50) cask lifting device(s) used for cask upending and downending and HI-TRAC raising for positioning on top of HI-STORM to allow MPC transfer. The device may consist of a crane, lifting platform, gantry system or any other suitable device used for such purpose.
Inflatable Annulus Seal	Not Important To Safety	8.1.13	Used to prevent spent fuel pool water from contaminating the external MPC shell and baseplate surfaces during in-pool operations.
Lid Retention System	Important to Safety Status determined by each licensee. MPC lid lifting portions of the Lid Retention System shall meet the requirements of ANSI N14.6.	8.1.15, 8.1.17	Optional. The Lid Retention System secures the MPC lid in place during cask handling operations between the pool and decontamination pad.
MPC Lift Cleats	Important To Safety – Category A. MPC Lift Cleats shall be provided in accordance with of ANSI N14.6.	8.1.24	MPC lift cleats consist of the cleats and attachment hardware. The cleats are supplied as solid steel components that contain no weds. The MPC lift cleats are used to secure the MPC inside HI-TRAC during bottom lid replacement and support the MPC during MPC transfer from HI-TRAC into HI-STORM and vice versa. The ITS classification of the lifting device attached to the cleats may be lower than the cleat itself, as determined site-specifically.
Pressure Test System	Not Important to Safety	8.1.20	Used to pressure test the MPC lid-to-shell weld.
MPC Downloader	Important To Safety status determined site-specifically. MPC Downloader Shall meet the requirements of CoC, Appendix B, Section 3.5 .	8.1.28 and 8.1.32	A lifting device used to help raise and lower the MPC during MPC transfer operations to limit the lift force of the MPC against the top lid of HI-TRAC. The MPC downloader may take several forms depending on the location of MPC transfer and may be used in conjunction with other lifting devices.

† Figures are representative and may not depict all configurations for all users.

HOLTEC INTERNATIONAL COPYRIGHTED MATERIAL

Table 8.1.6
HI-STORM 100 SYSTEM ANCILLARY EQUIPMENT OPERATIONAL DESCRIPTION
(Continued)

Equipment	Important To Safety Classification	Reference Figure†	Description
Deleted			
Deleted			
Mating Device	Important-To-Safety – Category B	8.1.31	Used to mate HI-TRAC 100D and 125D to HI-STORM during transfer operations. Includes sliding drawer for use in removing HI-TRAC pool lid.
MPC Support Slings	Important To Safety – Category A – Rigging shall be provided in accordance with NUREG 0612.	8.1.25	Used to secure the MPC to the lift yoke during HI-TRAC bottom lid replacement operations. Attaches between the MPC lift cleats and the lift yoke. Can be configured for different crane hook configuration.
MPC Upending Frame	Not Important to Safety	8.1.6	A steel frame used to evenly support the MPC during upending operations. and control the upending process.
Supplemental Cooling System	Important to Safety – Category B	2.C.1	A system used to circulate water or other coolant through the HI-TRAC annulus in order to maintain fuel cladding temperatures below ISG-11 Rev. 3 limits during operations with the MPC in the HI-TRAC. Required only for MPC containing high burn-up fuel as determined in accordance with Section 4.5.
MSLD (Helium Leakage Detector	Not Important to Safety	Not shown	Used for helium leakage testing of the vent/drain port cover plate welds.
Deleted			
Temporary Shield Ring	Not Important To Safety	8.1.18	A water-filled tank that fits on the cask neutron shield around the upper forging and provides supplemental shielding to personnel performing cask loading and closure operations.
Vacuum Drying (Moisture Removal) System	Not Important To Safety	8.1.22a	Used for removal of residual moisture from the MPC following water draining.
Forced Helium Dehydration System	Not Important To Safety	8.1.22b	Used for removal of residual moisture from the MPC following water draining.
Vent and Drain RVOAs	Not Important To Safety	8.1.16	Used to access the vent and drain ports. The vent and drain RVOAs allow the vent and drain ports to be operated like valves and prevent the need to hot tap into the penetrations during unloading operation.
Deleted			
Weld Removal System	Not Important To Safety	8.3.2b	Semi-automated weld removal system used for removal of the MPC field weld to support unloading operations.

† Figures are representative and may not depict all configurations for all users.

HOLTEC INTERNATIONAL COPYRIGHTED MATERIAL

Table 8.1.7
HI-STORM 100 SYSTEM INSTRUMENTATION SUMMARY FOR LOADING AND UNLOADING OPERATIONS†

Instrument	Function
Contamination Survey Instruments	Monitors fixed and non-fixed contamination levels.
Dose Rate Monitors/Survey Equipment	Monitors dose rate and contamination levels and ensures proper function of shielding. Ensures assembly debris is not inadvertently removed from the spent fuel pool during overpack removal.
Flow Rate Monitor	Monitors fluid flow rate during various loading and unloading operations.
Helium Mass Spectrometer Leakage Detector (MSLD)	Ensures leakage rates of welds are within acceptable limits.
Deleted	
Deleted	
Volumetric Examination Testing Rig	Used to assess the integrity of the MPC lid-to-shell weld.
Pressure Gauges	Ensures correct pressure during loading and unloading operations.
Temperature Gauges	Monitors the state of gas and water temperatures during closure and unloading operations.
Deleted	
Temperature Surface Pyrometer	For HI-STORM vent operability testing.
Vacuum Gages	Used for vacuum drying operations and to prepare an MPC evacuated sample bottle for MPC gas sampling for unloading operations.
Deleted	
Deleted	
Moisture Monitoring Instruments	Used to monitor the MPC moisture levels as part of the moisture removal system.

† All instruments require calibration. See figures at the end of this section for additional instruments, controllers and piping diagrams.

HOLTEC INTERNATIONAL COPYRIGHTED MATERIAL

Table 8.1.8
HI-STORM 100 SYSTEM OVERPACK INSPECTION CHECKLIST

Note:
This checklist provides the basis for establishing a site-specific inspection checklist for the HI-STORM 100 overpack. Specific findings shall be brought to the attention of the appropriate site organizations for assessment, evaluation and potential corrective action prior to use.

HI-STORM 100 Overpack Lid:

1. Lid studs and nuts or lid closure bolts shall be inspected for general condition.
2. The painted surfaces shall be inspected for corrosion and chipped, cracked or blistered paint.
3. All lid surfaces shall be relatively free of dents, scratches, gouges or other damage.
4. The lid shall be inspected for the presence or availability of studs and nuts and hole plugs.
5. Lid lifting device/ holes shall be inspected for dirt and debris and thread condition.
6. Lid bolt holes shall be inspected for general condition.

HI-STORM 100 Main Body:

1. Lid bolt holes shall be inspected for dirt, debris, and thread condition.
2. Vents shall be free from obstructions.
3. Vent screens shall be available, intact, and free of holes and tears in the fabric.
4. The interior cavity shall be free of debris, litter, tools, and equipment.
5. Painted surfaces shall be inspected for corrosion, and chipped, cracked or blistered paint.
6. The nameplate shall be inspected for presence, legibility, and general condition and conformance to Quality Assurance records package.
7. Anchor hardware, if used, shall be checked for general condition.

HOLTEC INTERNATIONAL COPYRIGHTED MATERIAL

Table 8.1.9
MPC INSPECTION CHECKLIST

Note:
This checklist provides the basis for establishing a site-specific inspection checklist for MPC. Specific findings shall be brought to the attention of the appropriate site organizations for assessment, evaluation and potential corrective action prior to use.

MPC Lid and Closure Ring:

1. The MPC lid and closure ring surfaces shall be relatively free of dents, gouges or other shipping damage.
2. The drain line shall be inspected for straightness, thread condition, and blockage.
3. Vent and Drain attachments shall be inspected for availability, thread condition operability and general condition.
4. Upper fuel spacers (if used) shall be inspected for availability and general condition. Plugs shall be available for non-used spacer locations.
5. Lower fuel spacers (if used) shall be inspected for availability and general condition.
6. Drain and vent port cover plates shall be inspected for availability and general condition.
7. Serial numbers shall be inspected for readability.

MPC Main Body:

1. All visible MPC body surfaces shall be inspected for dents, gouges or other shipping damage.
2. Fuel cell openings shall be inspected for debris, dents and general condition.
3. Lift lugs shall be inspected for general condition.
4. Verify proper MPC basket type for contents.

HOLTEC INTERNATIONAL COPYRIGHTED MATERIAL

Table 8.1.10
HI-TRAC TRANSFER CASK INSPECTION CHECKLIST

Note:
This checklist provides the basis for establishing a site-specific inspection checklist for the HI-TRAC Transfer Cask. Specific findings shall be brought to the attention of the appropriate site organizations for assessment, evaluation and potential corrective action prior to use.

HI-TRAC Top Lid:

1. The painted surfaces shall be inspected for corrosion and chipped, cracked or blistered paint.
2. All Top Lid surfaces shall be relatively free of dents, scratches, gouges or other damage.

HI-TRAC Main Body:

1. The painted surfaces shall be inspected for corrosion, chipped, cracked or blistered paint.
2. The Top Lid bolt holes shall be inspected for dirt, debris and thread damage.
3. The Top Lid lift holes shall be inspected for thread condition.
4. Lifting trunnions shall be inspected for deformation, cracks, damage, corrosion, excessive galling, and, if applicable, damage to the locking plate and end plate, and presence or availability of locking plate and end plate retention bolts.
5. Pocket trunnion, if used, recesses shall be inspected for indications of overstressing (i.e., cracks, deformation, and excessive wear).
6. Annulus inflatable seal groove shall be inspected for cleanliness, scratches, dents, gouges, sharp corners, burrs or any other condition that may damage the inflatable seal.
7. The nameplate shall be inspected for presence and general condition.
8. The neutron shield jacket shall be inspected for leaks.
9. Neutron shield jacket pressure relief valve shall be inspected for presence, and general condition.
10. The neutron shield jacket fill and drain plugs shall be inspected for presence, leaks, and general condition.
11. Bottom lid flange surface shall be clean and free of large scratches and gouges.

HOLTEC INTERNATIONAL COPYRIGHTED MATERIAL

Table 8.1.10 (Continued)
HI-TRAC OVERPACK INSPECTION CHECKLIST

HI-TRAC Transfer Lid (Not used with HI-TRAC 100D and 125D):

1. The doors shall be inspected for smooth actuation.
2. The threads shall be inspected for general condition.
3. The bolts shall be inspected for indications of overstressing (i.e., cracks, deformation, thread damage, excessive wear) and replaced as necessary.
4. Door locking pins shall be inspected for indications of overstressing (i.e., cracks, and deformation, thread damage, excessive wear) and replaced as necessary.
5. Painted surfaces shall be inspected for corrosion and chipped, cracked or blistered paint.
6. Lifting holes shall be inspected for thread damage.

HI-TRAC Pool Lid:

1. Seal shall be inspected for cracks, breaks, cuts, excessive wear, flattening, and general condition.
2. Drain line shall be inspected for blockage and thread condition.
3. The lifting holes shall be inspected for thread damage.
4. The bolts shall be inspected for indications of overstressing (i.e., cracks and deformation, thread damage, and excessive wear).
5. Painted surfaces shall be inspected for corrosion and chipped, cracked or blistered paint.
6. Threads shall be inspected for indications of damage.

HOLTEC INTERNATIONAL COPYRIGHTED MATERIAL

LOCATION: CASK RECEIVING AREA
REMOVE HI-TRAC TOP LID
CONFIGURE HI-TRAC WITH POOL LID
INSTALL MPC IN HI-TRAC
INSTALL UPPER FUEL SPACERS
INSTALL LOWER FUEL SPACERS
FILL MPC AND ANNULUS
INSTALL ANNULUS SEAL
PLACE HI-TRAC IN SPENT FUEL POOL
LOCATION: SPENT FUEL POOL
LOAD FUEL ASSEMBLIES INTO MPC
PERFORM ASSEMBLY IDENTIFICATION VERIFICATION
INSTALL DRAIN LINE TO MPC LID
ALIGN MPC LID AND LIFT YOKE TO DRAIN LINE
INSTALL MPC LID
REMOVE HI-TRAC FROM SPENT FUEL POOL AND PLACE IN PREPARATION AREA
LOCATION: CASK PREPARATION AREA
DECONTAMINATE HI-TRAC BOTTOM
SET HI-TRAC IN CASK PREPARATION AREA
FILL NEUTRON WATER JACKET
MEASURE DOSE RATES AT MPC LID
DECONTAMINATE HI-TRAC AND LIFT YOKE
INSTALL TEMPORARY SHIELD RING
REMOVE INFLATABLE ANNULUS SEAL
LOWER ANNULUS WATER LEVEL SLIGHTLY
SMEAR MPC LID TOP SURFACES
INSTALL ANNULUS SHIELD
LOWER MPC WATER LEVEL
WELD MPC LID & PERFORM NDE
DELETED
RAISE MPC WATER LEVEL
PERFORM MPC LID-TO-SHELL WELD PRESSURE TEST
DELETED
DRAIN MPC
MEASURE VOLUME OF WATER DRAINED
DRY MPC
PERFORM MPC DRYNESS VERIFICATION TEST

BACKFILL MPC
WELD VENT AND DRAIN PORT COVER PLATES & PERFORM NDE
PERFORM LEAKAGE TEST ON CLOSURE PLATES
WELD MPC CLOSURE RING & PERFORM NDE
DRAIN ANNULUS
INSTALL HI-TRAC TOP LID
PERFORM SURVEYS ON HI-TRAC
REMOVE TEMPORARY SHIELD RING
REPLACE POOL LID WITH TRANSFER LID (Not Required for HI-TRAC 100D and 125D)
INSTALL MPC LIFT CLEAT
PERFORM SURVEYS OF POOL LID
LOCATION: CASK RECIEVING AREA
POSITION HI-STORM FOR MPC TRANSFER
INSTALL ALIGNMENT DEVICE (MATING DEVICE FOR HI-TRAC 100D and 125D) & VENT DUCT SHIELD INSERTS
MATE OVERPACK AND TRANSFER CASK
ATTACH MPC SLINGS
OPEN TRANSFER LID DOORS (Remove pool lid and open mating device drawer for HI-TRAC 100D and 125D)
LOWER MPC INTO HI-STORM
REMOVE HI-TRAC FROM ON TOP OF HI-STORM
REMOVE MPC LIFT CLEAT
REMOVE ALIGNMENT DEVICE (Mating device for HI-TRAC 100D and 125D) & VENT DUCT SHIELD INSERTS
INSTALL HI-STORM LID
PERFORM SHIELDING EFFECTIVENESS TESTING
LOCATION: ISFSI
PLACE HI-STORM IN STORAGE
INSTALL GAMMA SHIELD CROSS PLATES AND THERMOCOUPLES IN HI-STORM 100 OVERPACK EXIT VENTS
INSTALL HI-STORM VENT SCREENS
PERFORM THERMAL TESTING

Figure 8.1.1; Loading Operations Flow Diagram

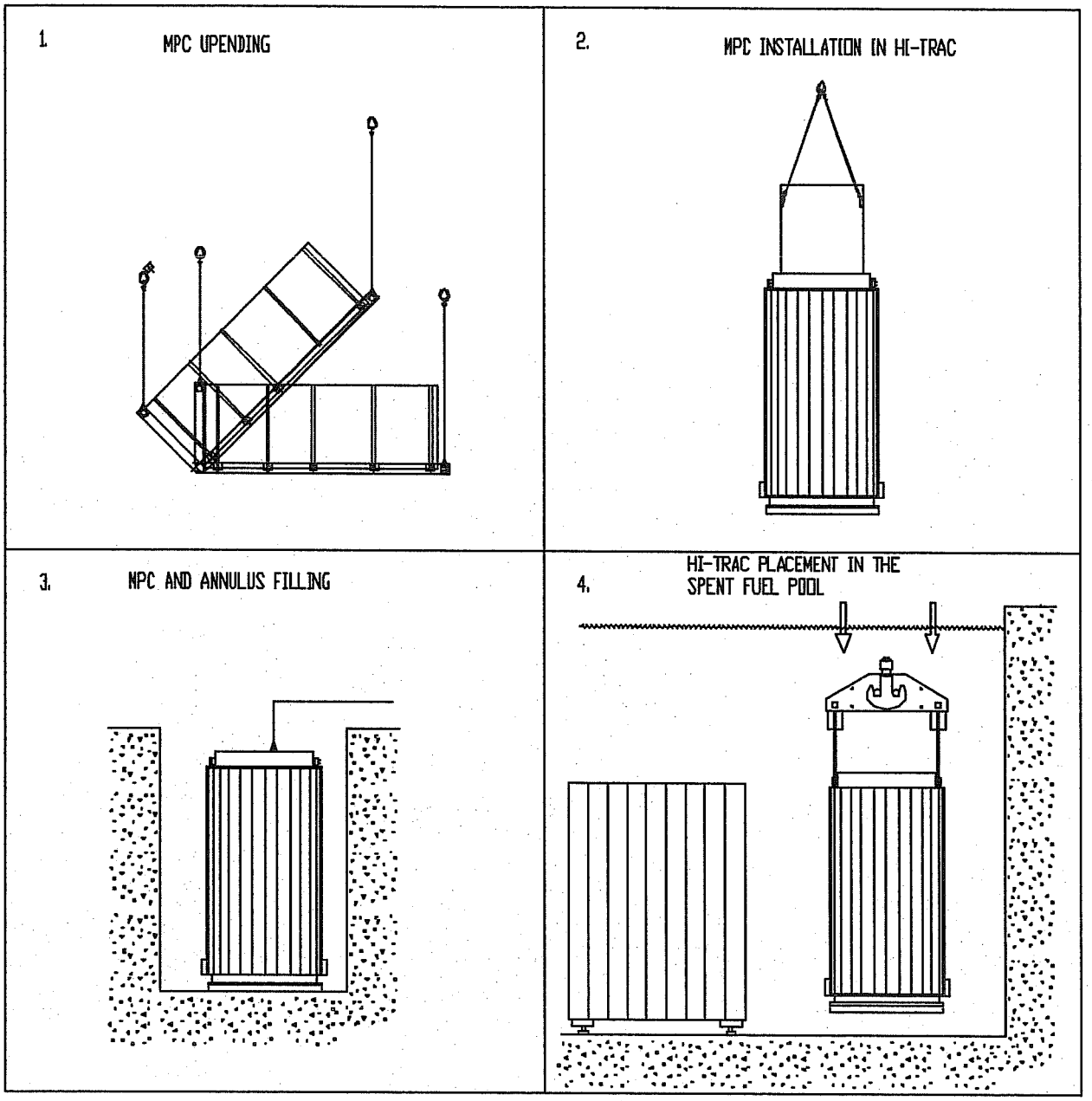

Figure 8.1.2a; Major HI-STORM 100 Loading Operations

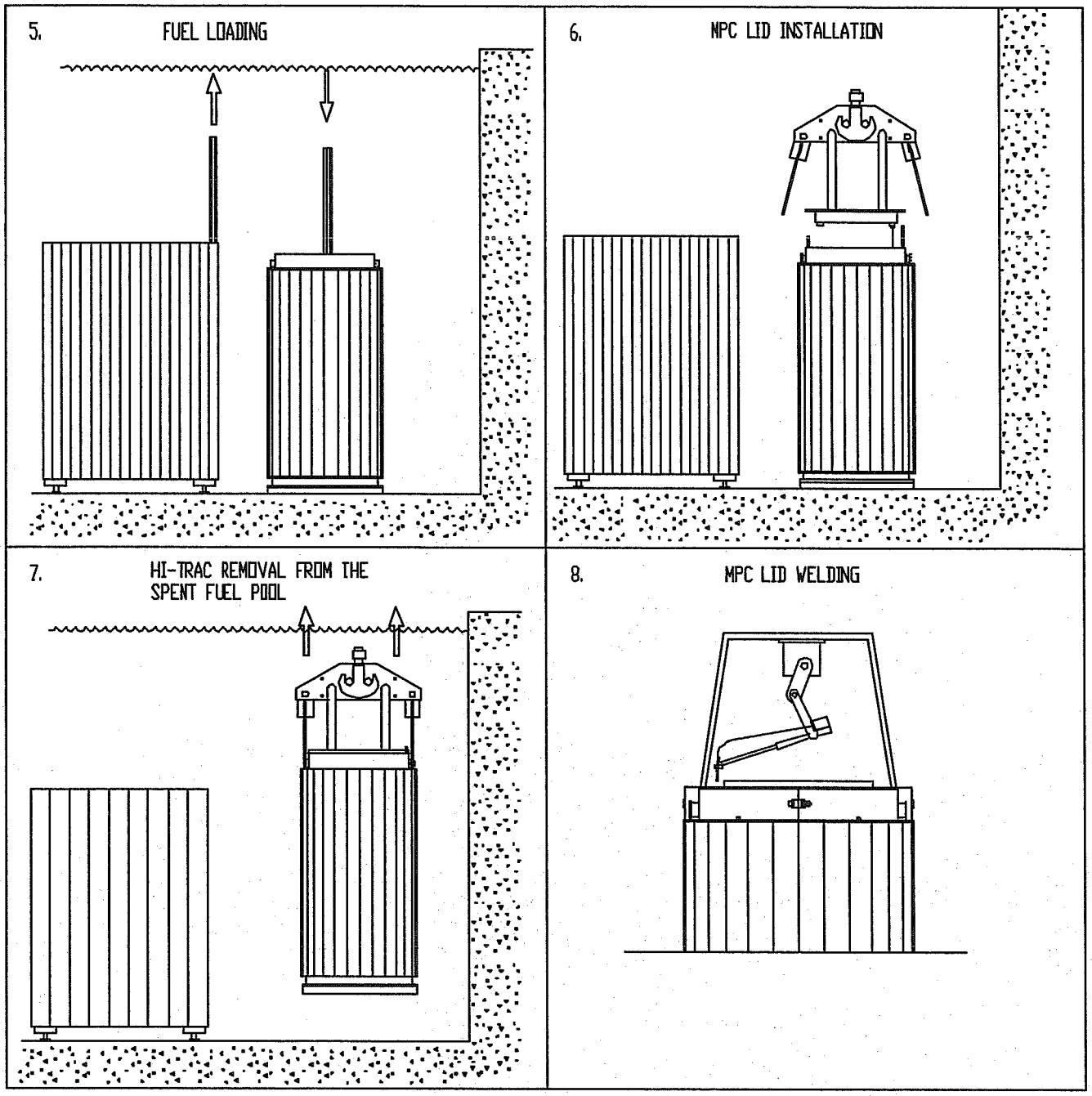

Figure 8.1.2b; Major HI-STORM 100 Loading Operations

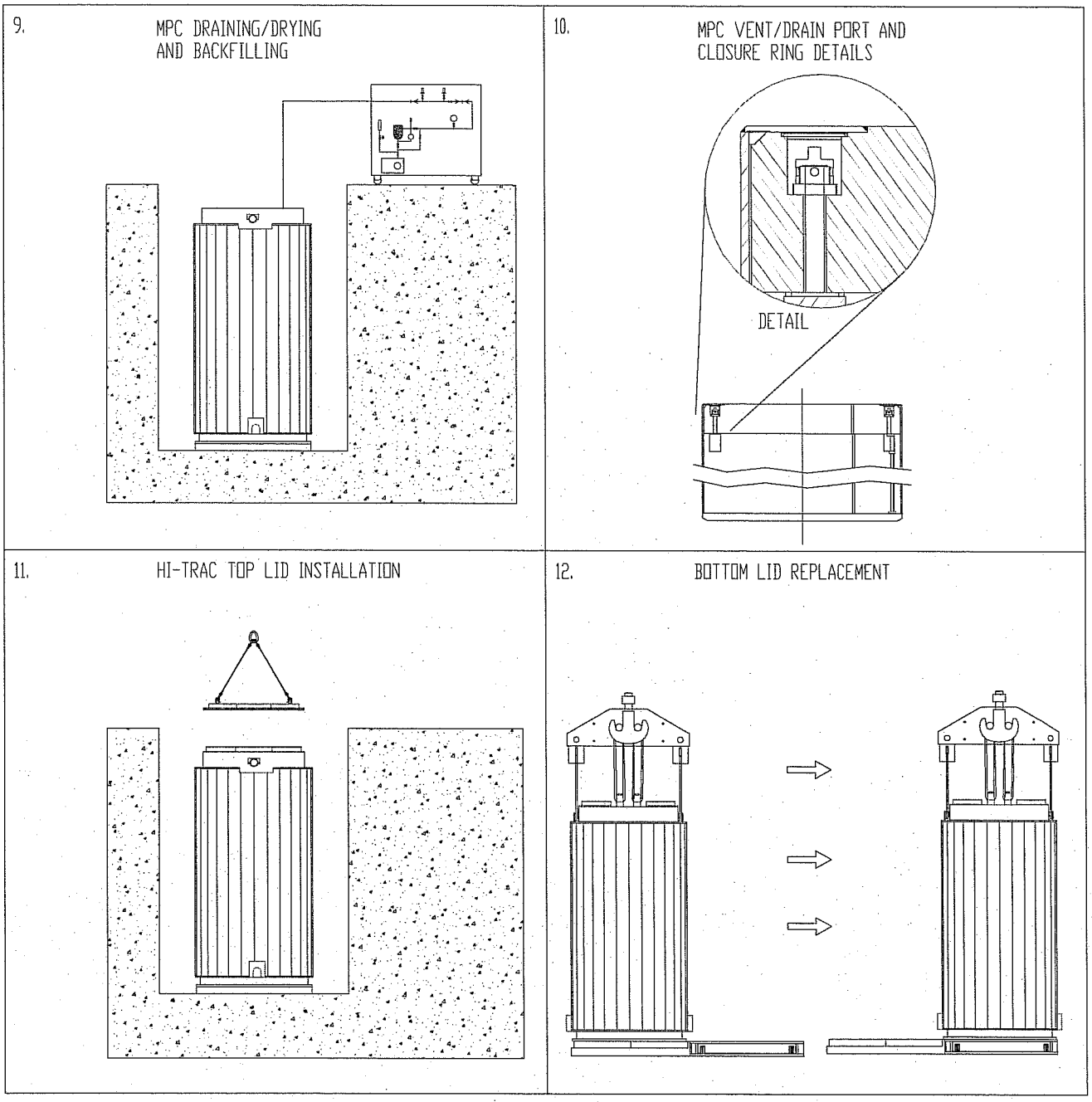

Note: Bottom Lid Replacement is notrequired for HI-TRAC 100D and 125D

Figure 8.1.2c; Major HI-STORM 100 Loading Operations

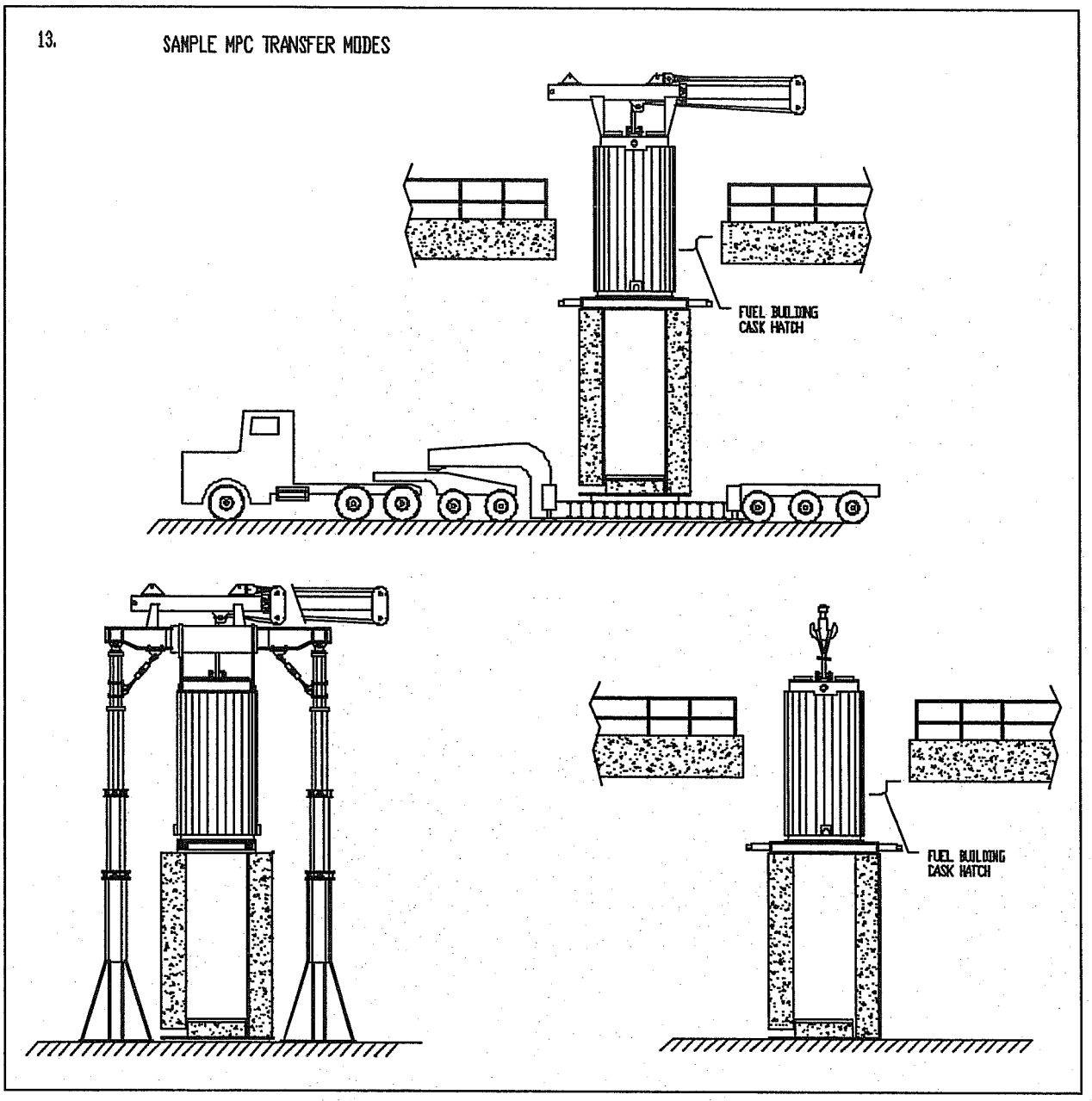

Figure 8.1.2d; Major HI-STORM 100 Loading Operations(HI-TRAC with Transfer Lid Shown)

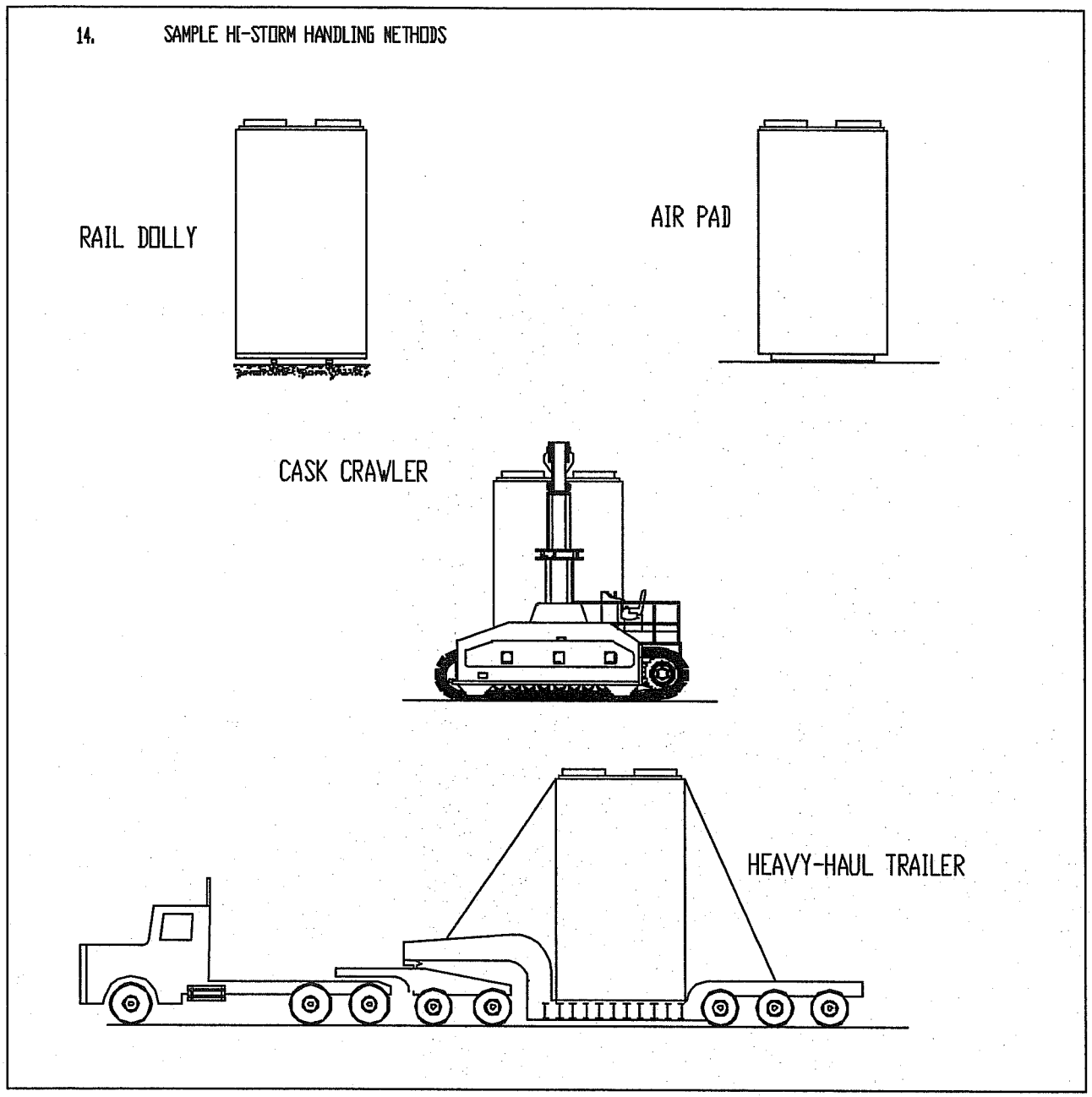

Figure 8.1.2e; Example of HI-STORM 100 Handling Options

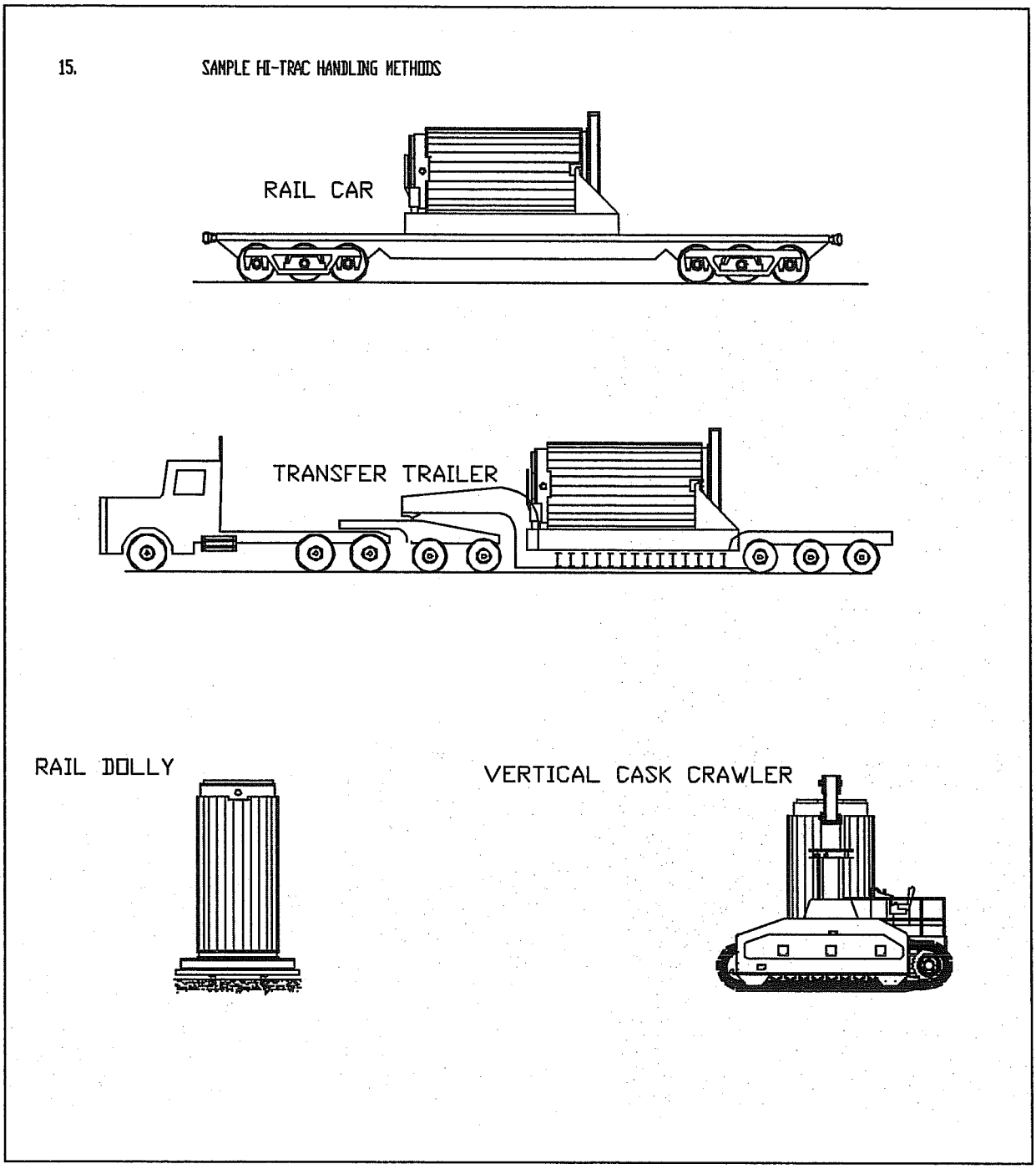

Figure 8.1.2f; Example of HI-TRAC Handling Options (Missile Shields Not Shown For Clarity)

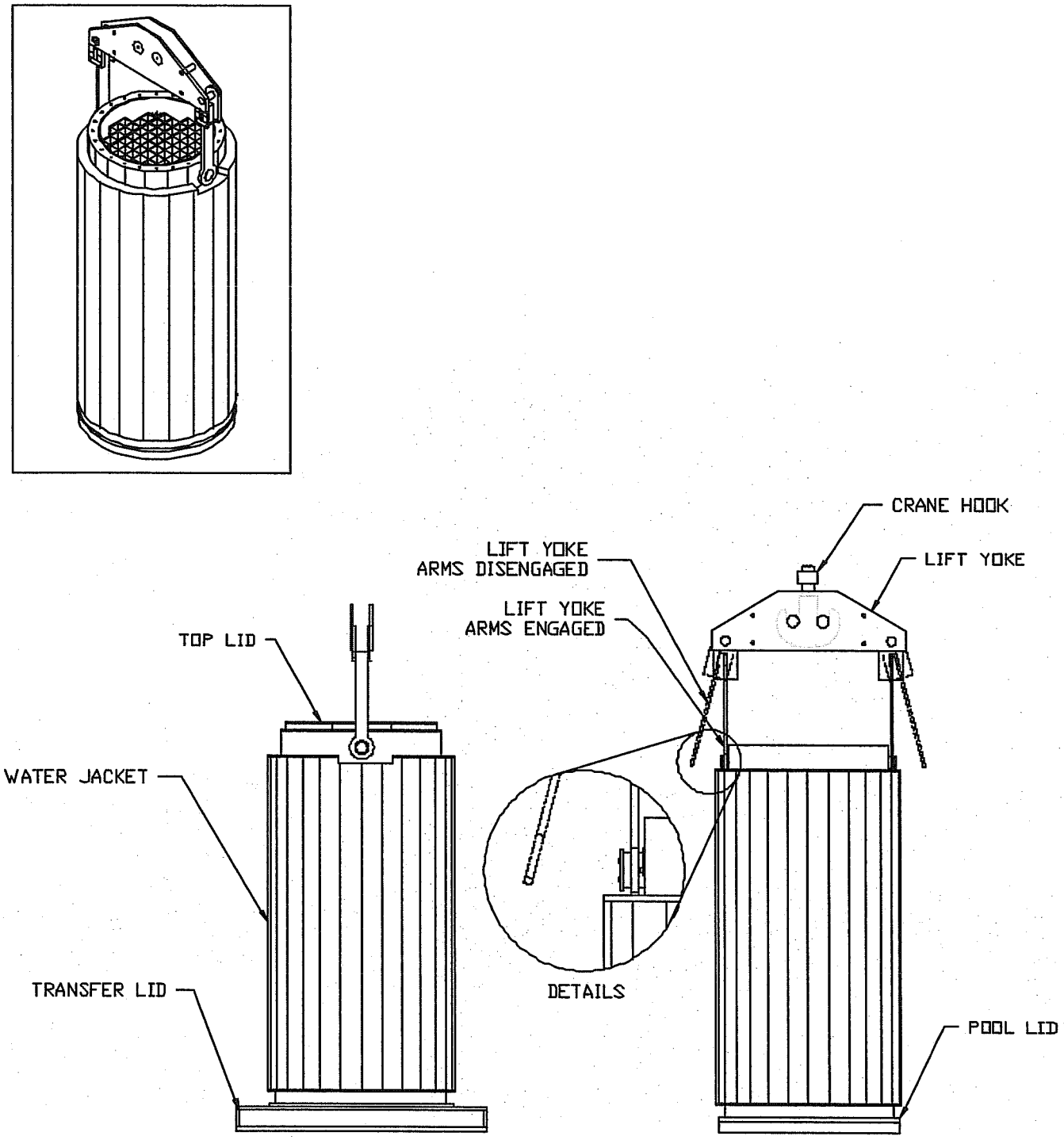

Figure 8.1.3; Lift Yoke Engagement and Vertical HI-TRAC Handling (Shown with the Pool Lid and the Transfer Lid)

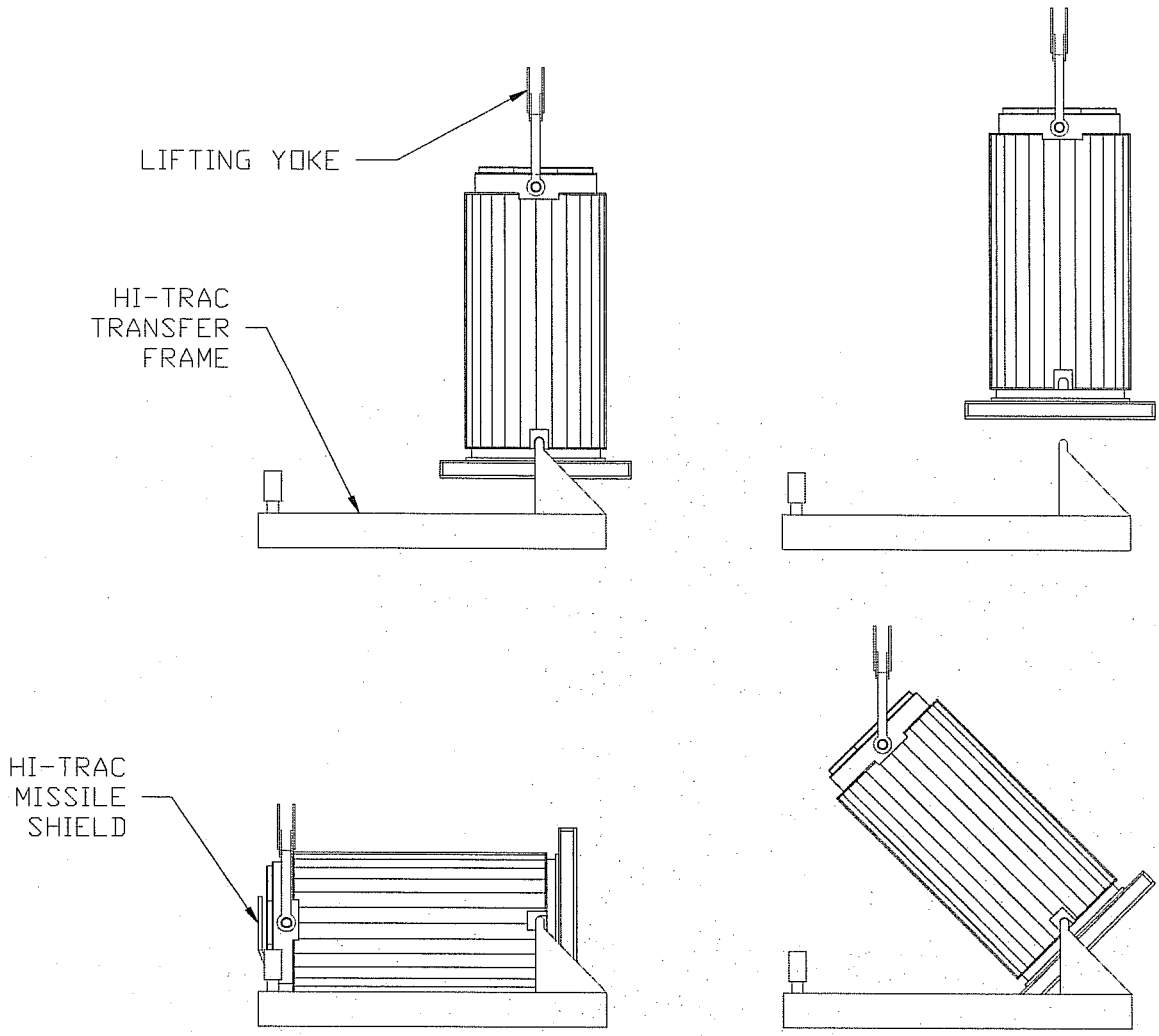

Figure 8.1.4; HI-TRAC Upending/Downending in the Transfer Frame

(HI-TRAC with pocket trunnions shown, HI-TRAC 100D and 125D utilize separate upending frame without pocket trunnions)

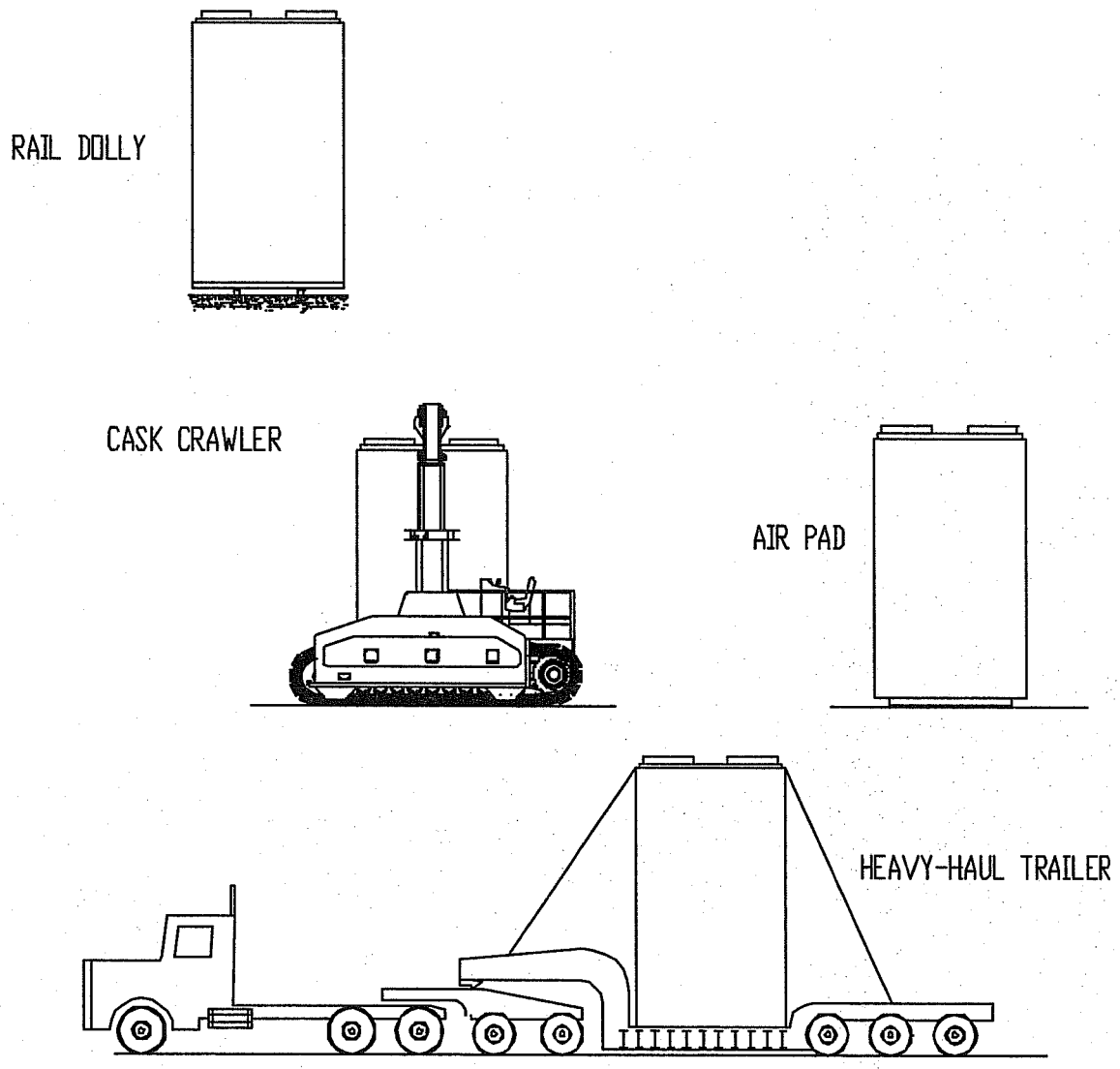

Figure 8.1.5; HI-STORM Vertical Handling

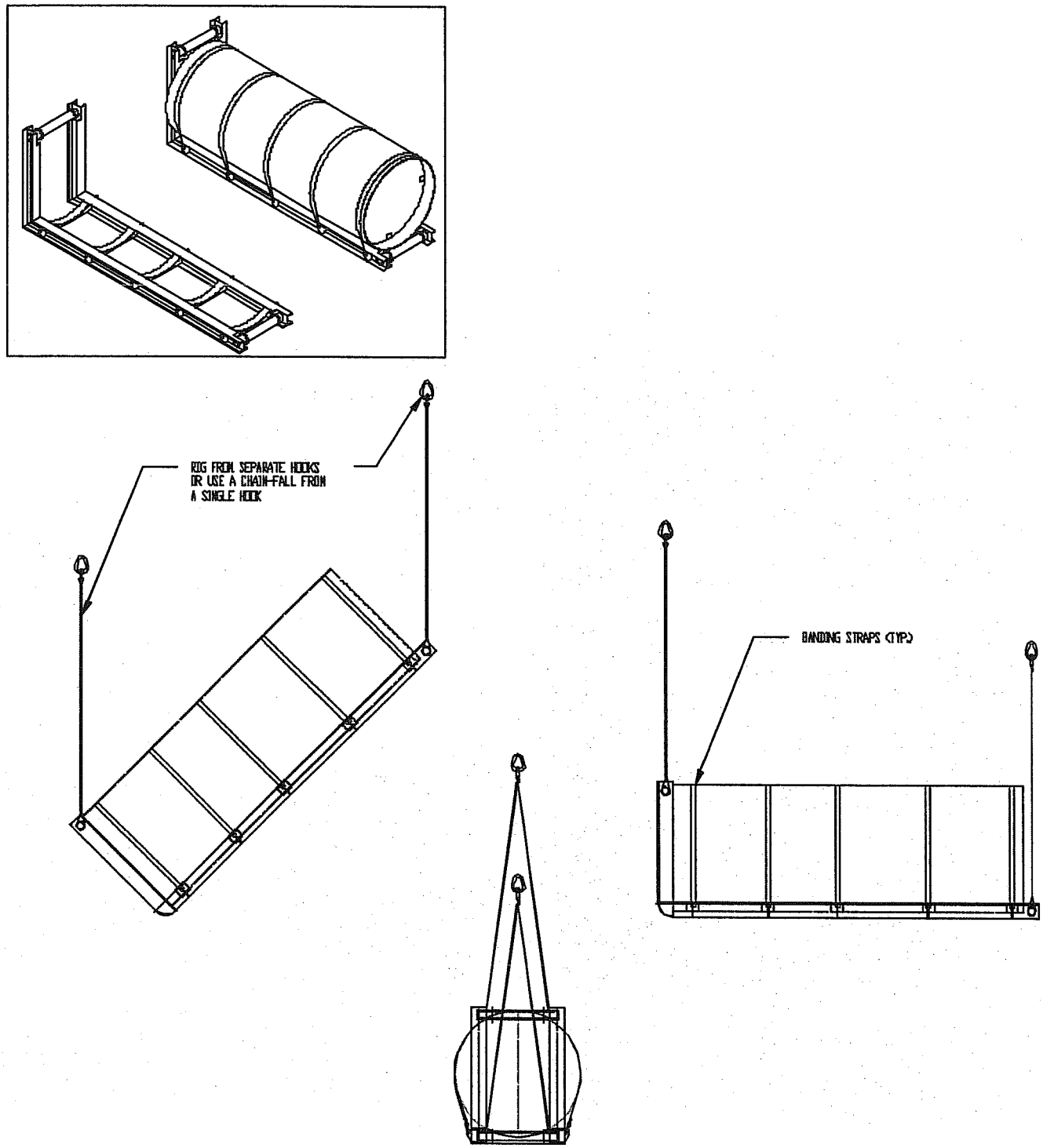

Figure 8.1.6; MPC Upending in the MPC Upending Frame

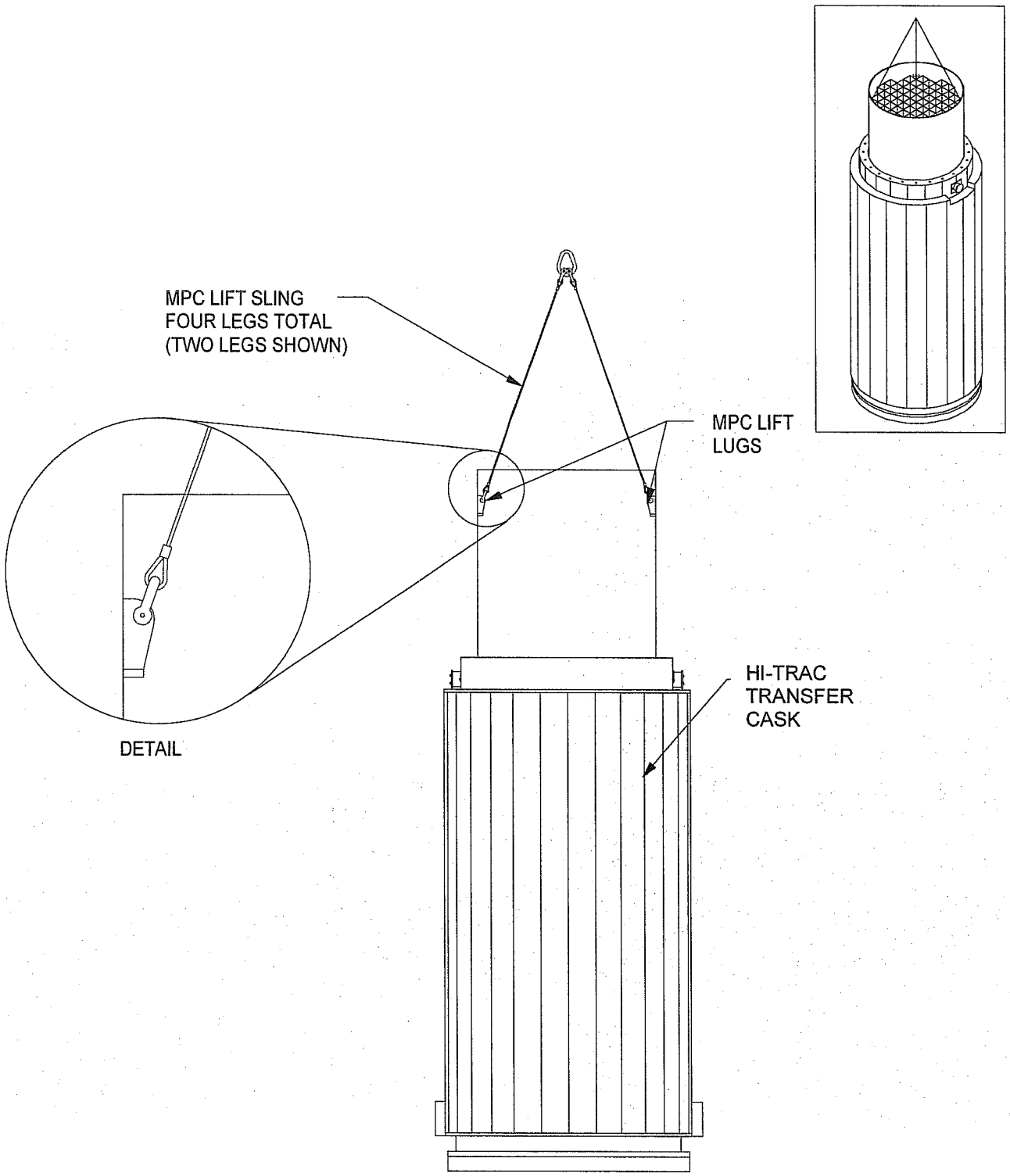

Figure 8.1.7; MPC Rigging for Vertical Lifts

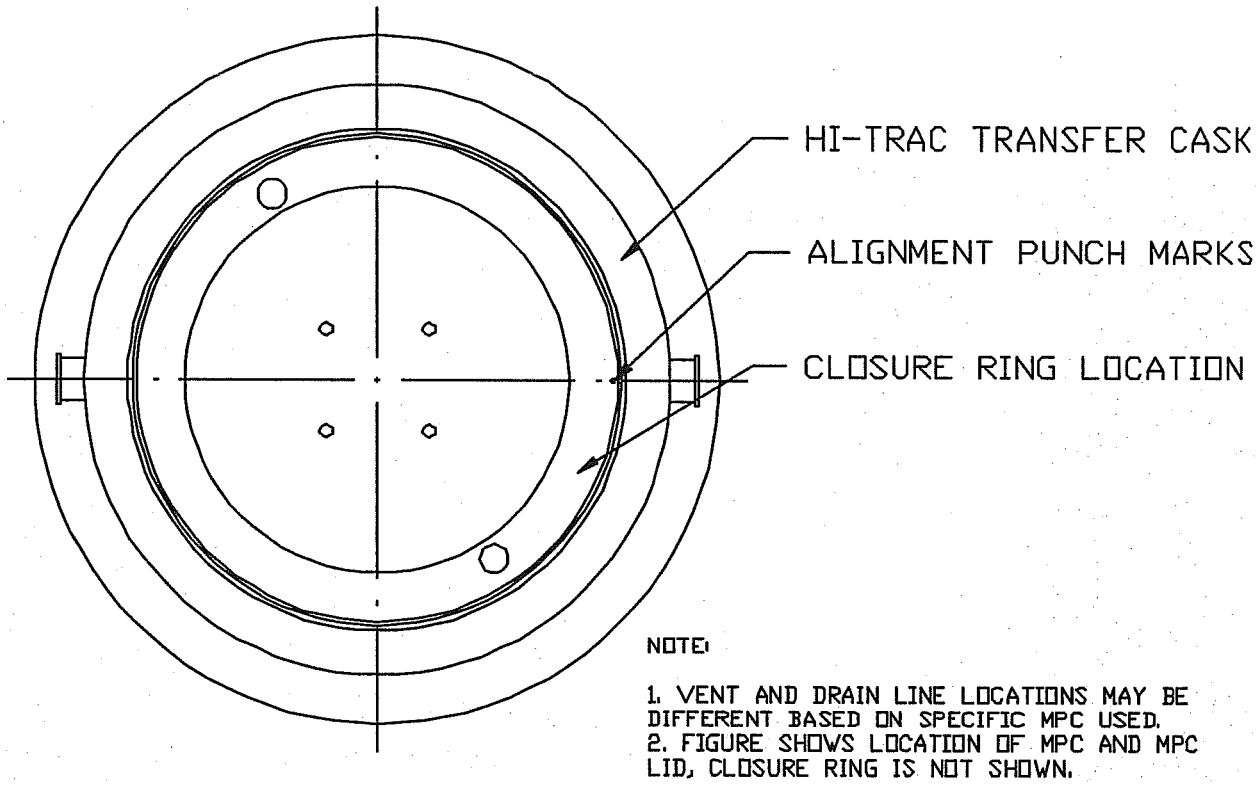

Figure 8.1.8; MPC Alignment in HI-TRAC

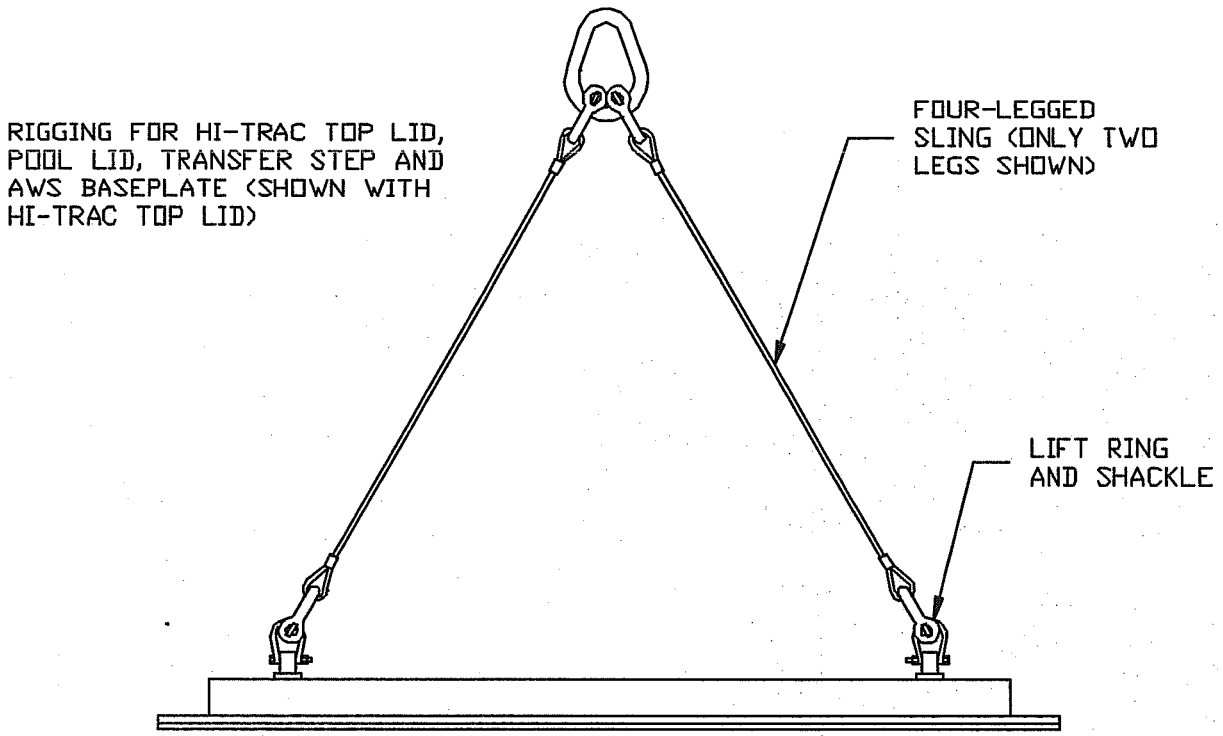

Figure 8.1.9; MPC Lid AND HI-TRAC Accessory Rigging

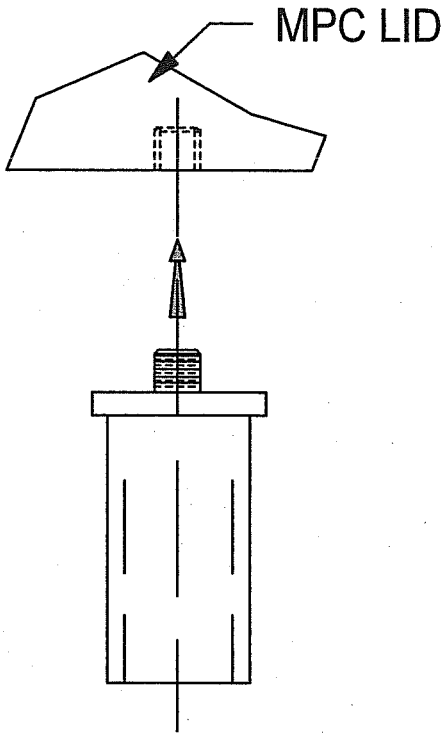

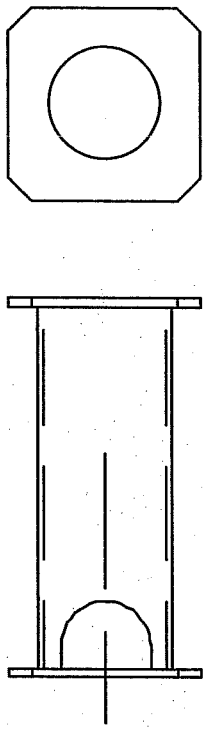

UPPER FUEL SPACER

LOWER FUEL SPACER

Note: Lengths are based on specific fuel assembly type to be stored.

Figure 8.1.10; Fuel Spacers

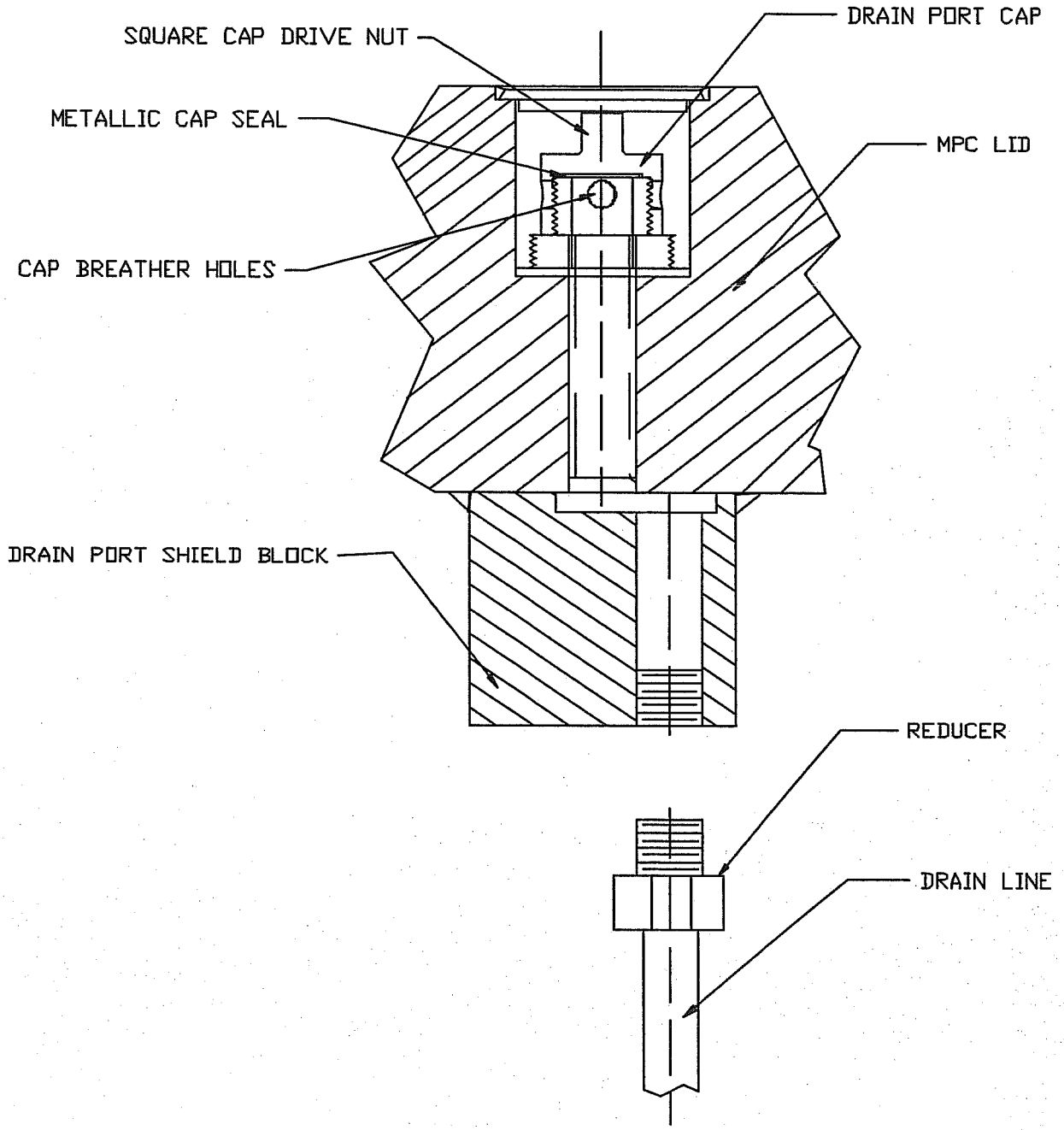

Figure 8.1.11; Drain Port Details

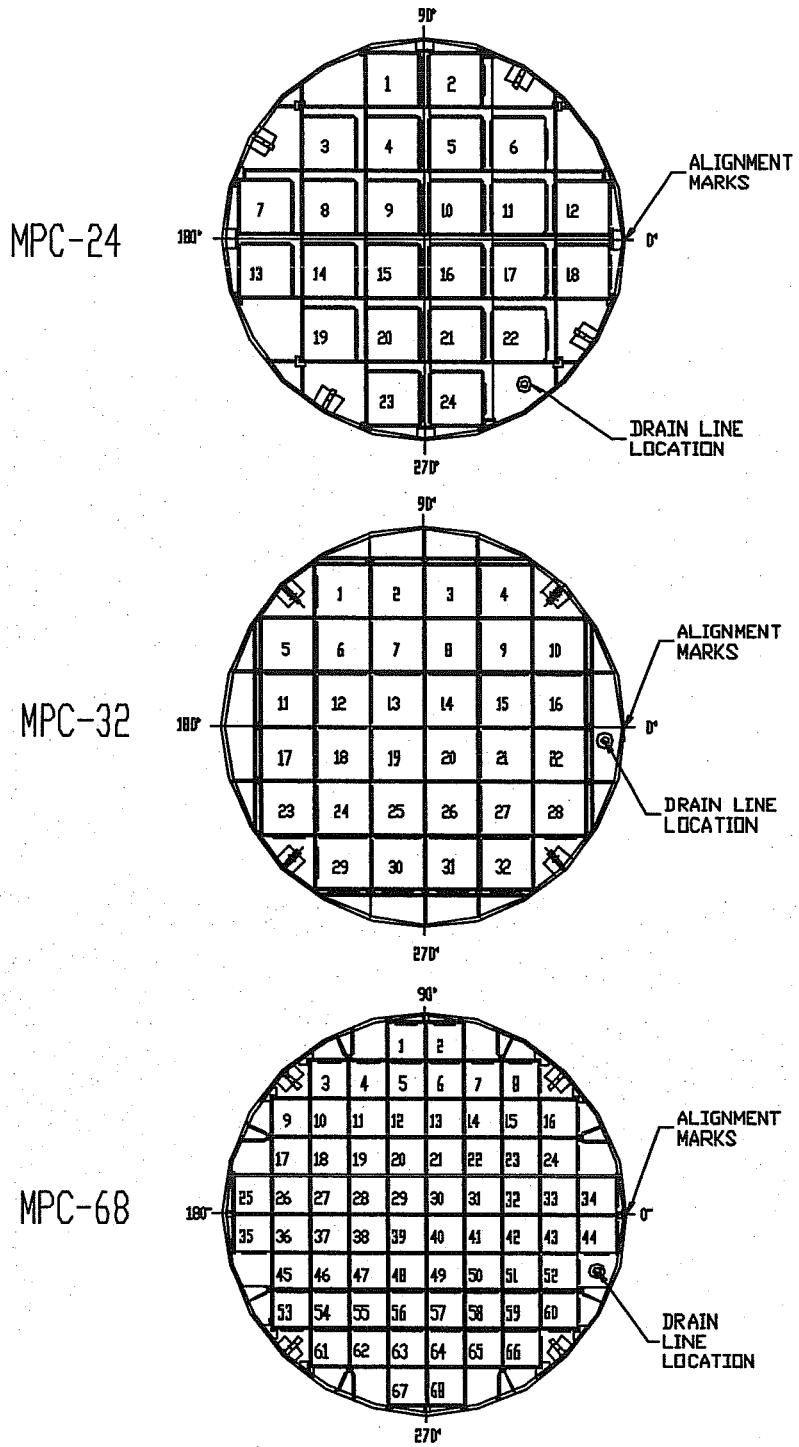

Figure 8.1.12; Drain Line Positioning

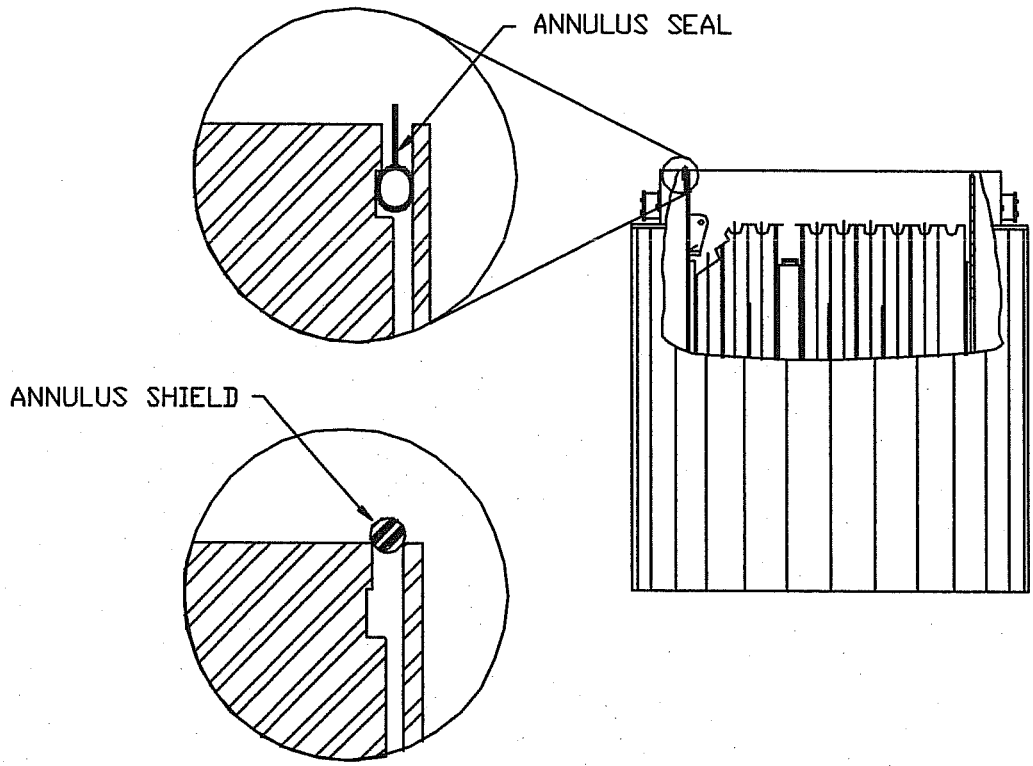

Figure 8.1.13; Annulus Shield/Annulus Seal

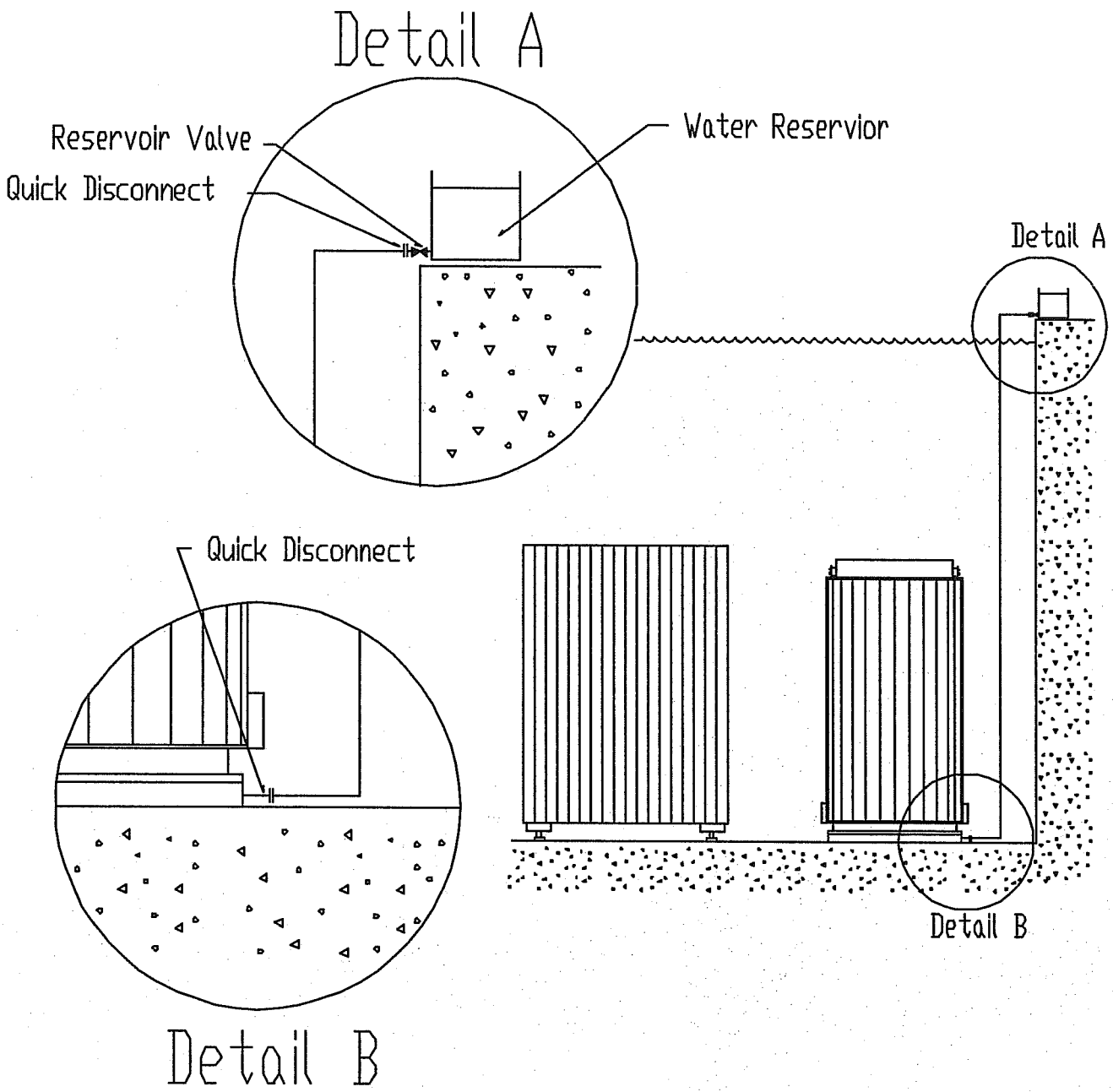

Figure 8.1.14; Annulus Overpressure System

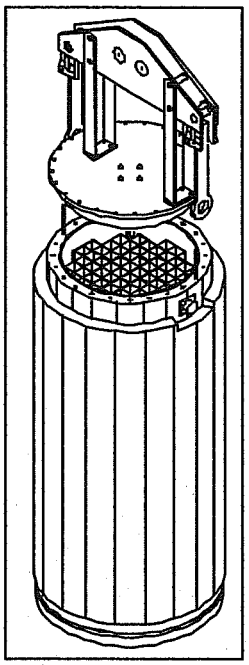

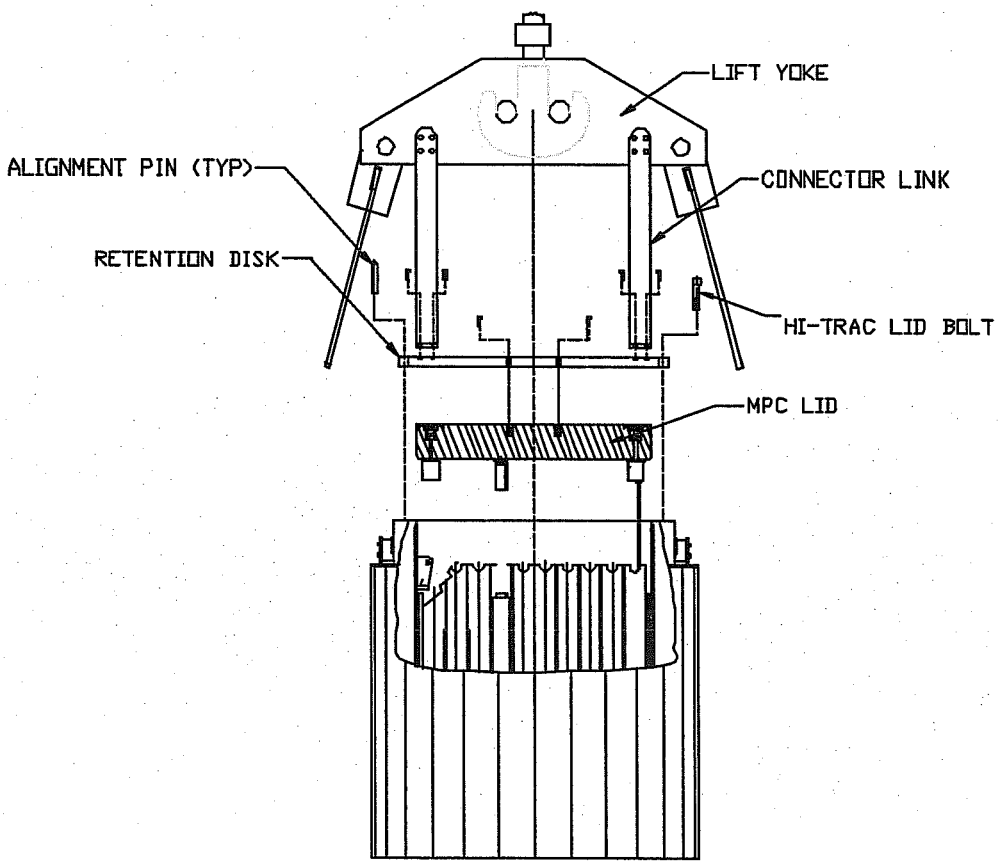

Figure 8.1.15; HI-TRAC Lid Retention System in Exploded View

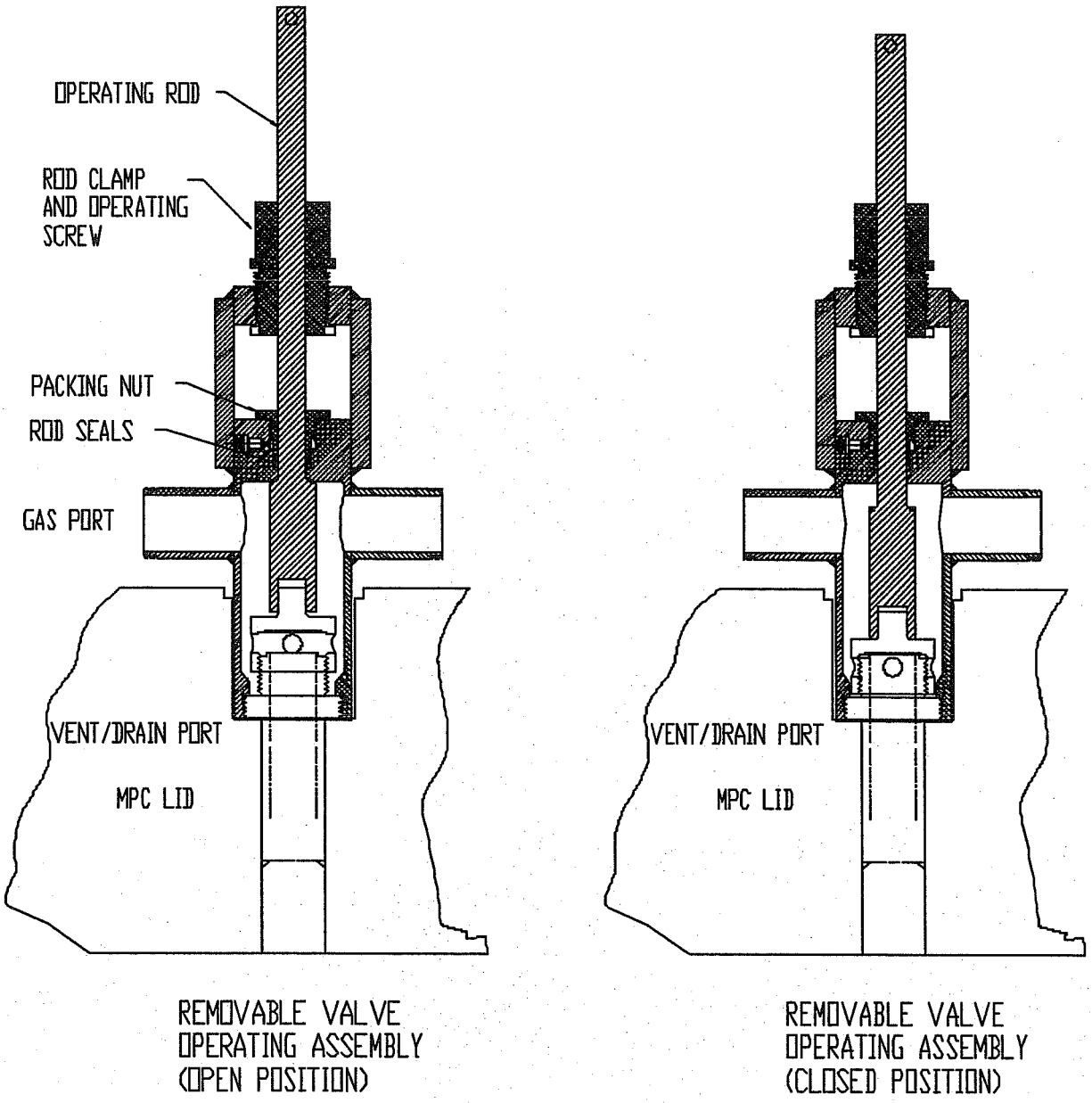

Figure 8.1.16; MPC Vent and Drain Port RVOA Connector

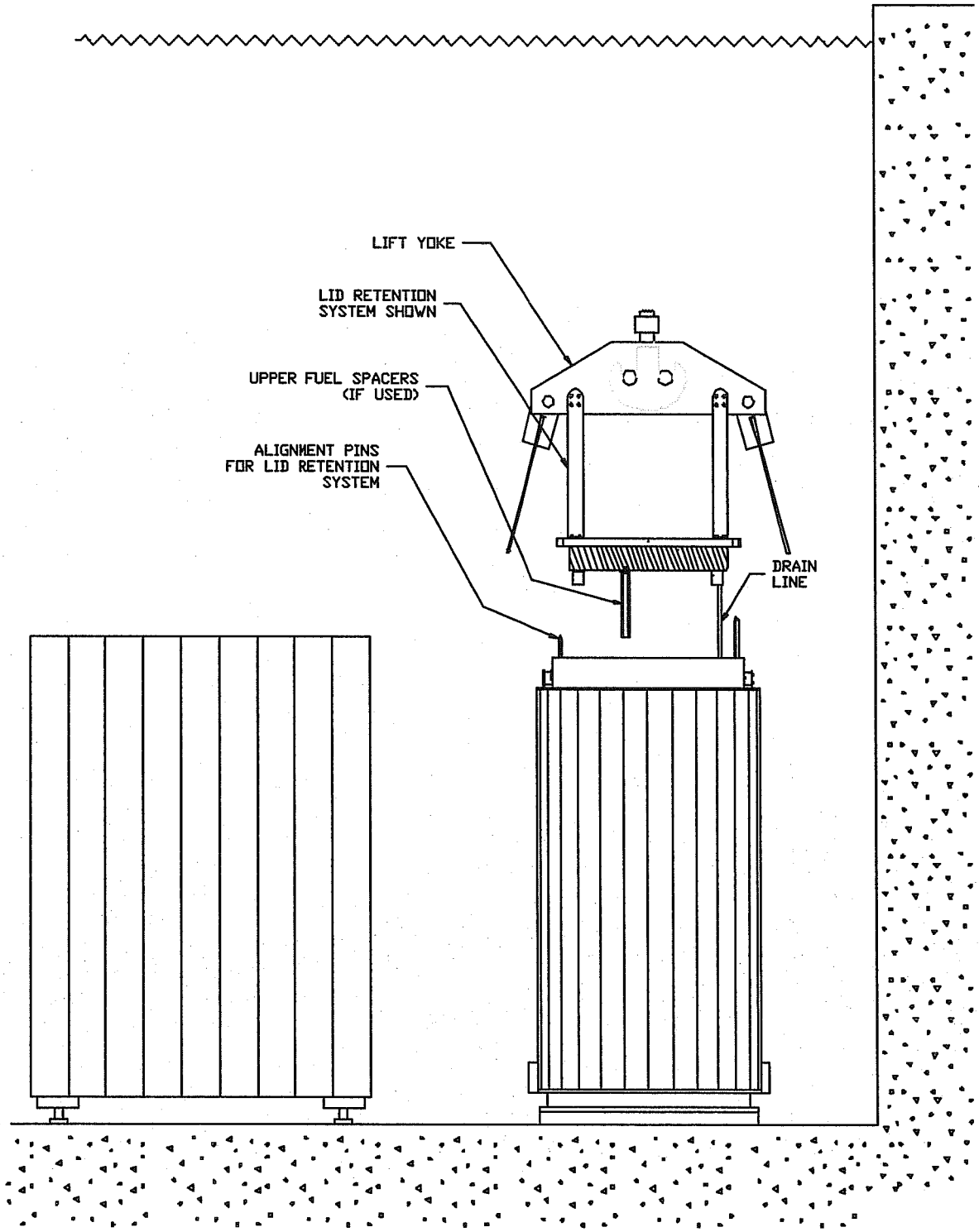

Figure 8.1.17; Drain Line Installation

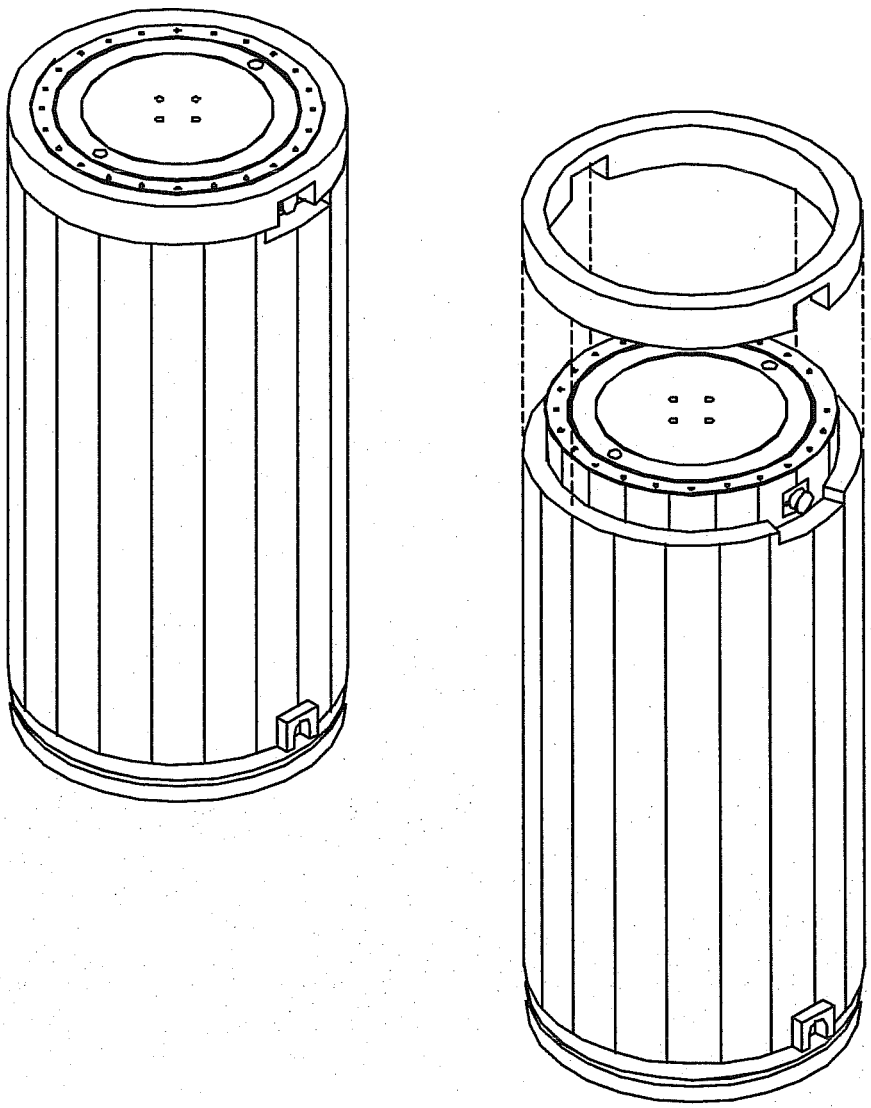

Figure 8.1.18; Temporary Shield Ring

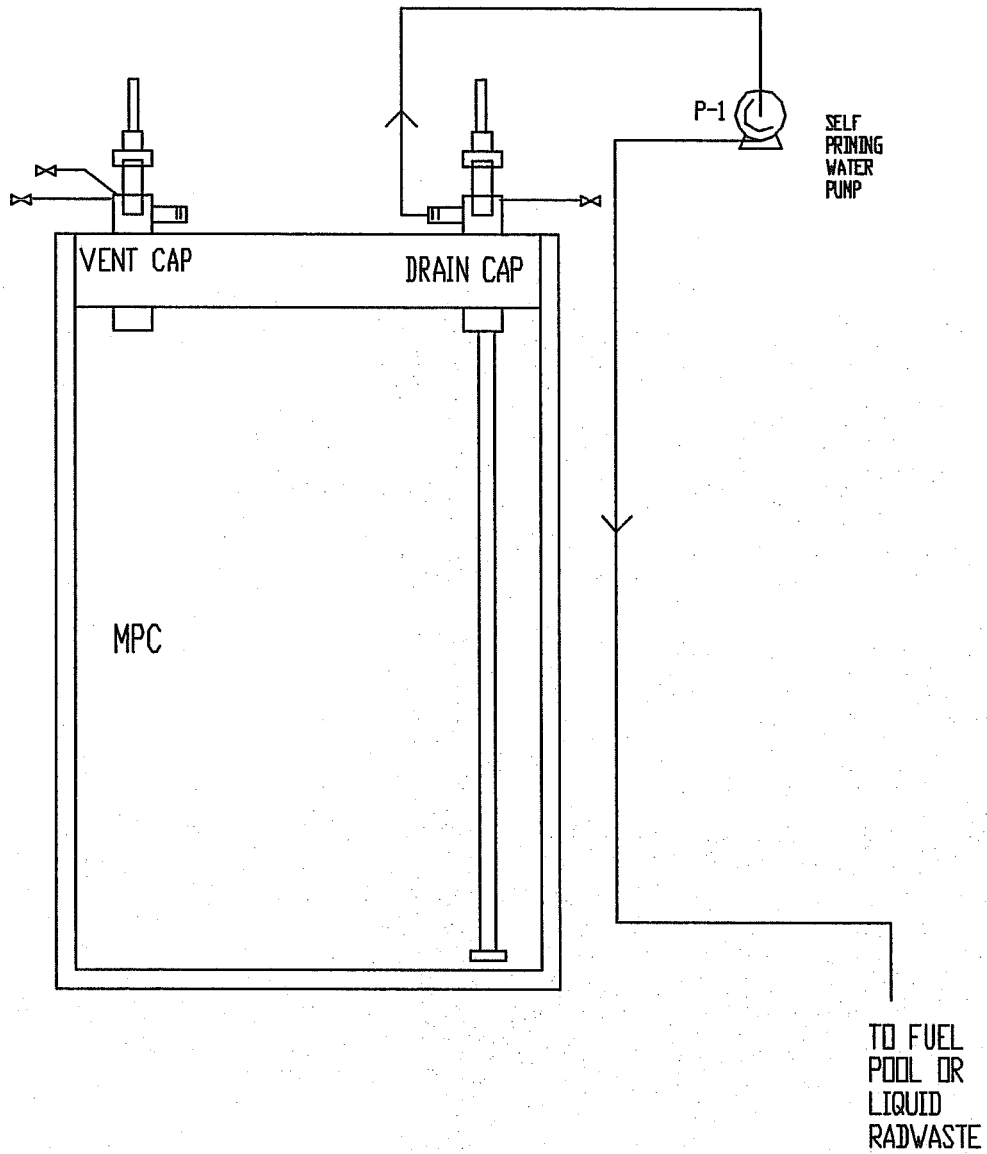

Figure 8.1.19; MPC Water Pump-Down for MPC Lid Welding Operations, Example P&I D

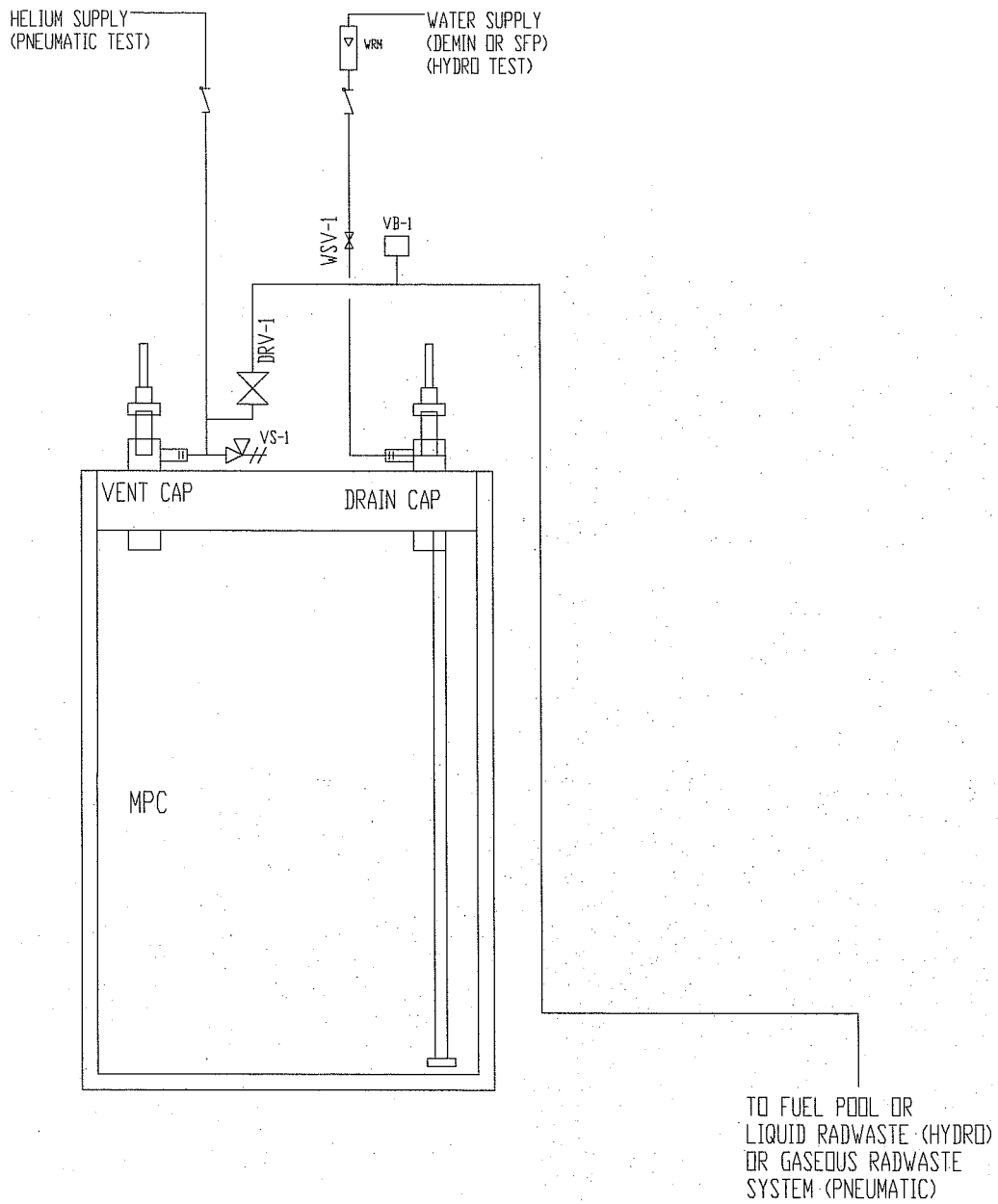

Figure 8.1.20; MPC Lid-to-Shell Pressure Testing, Example P&I D

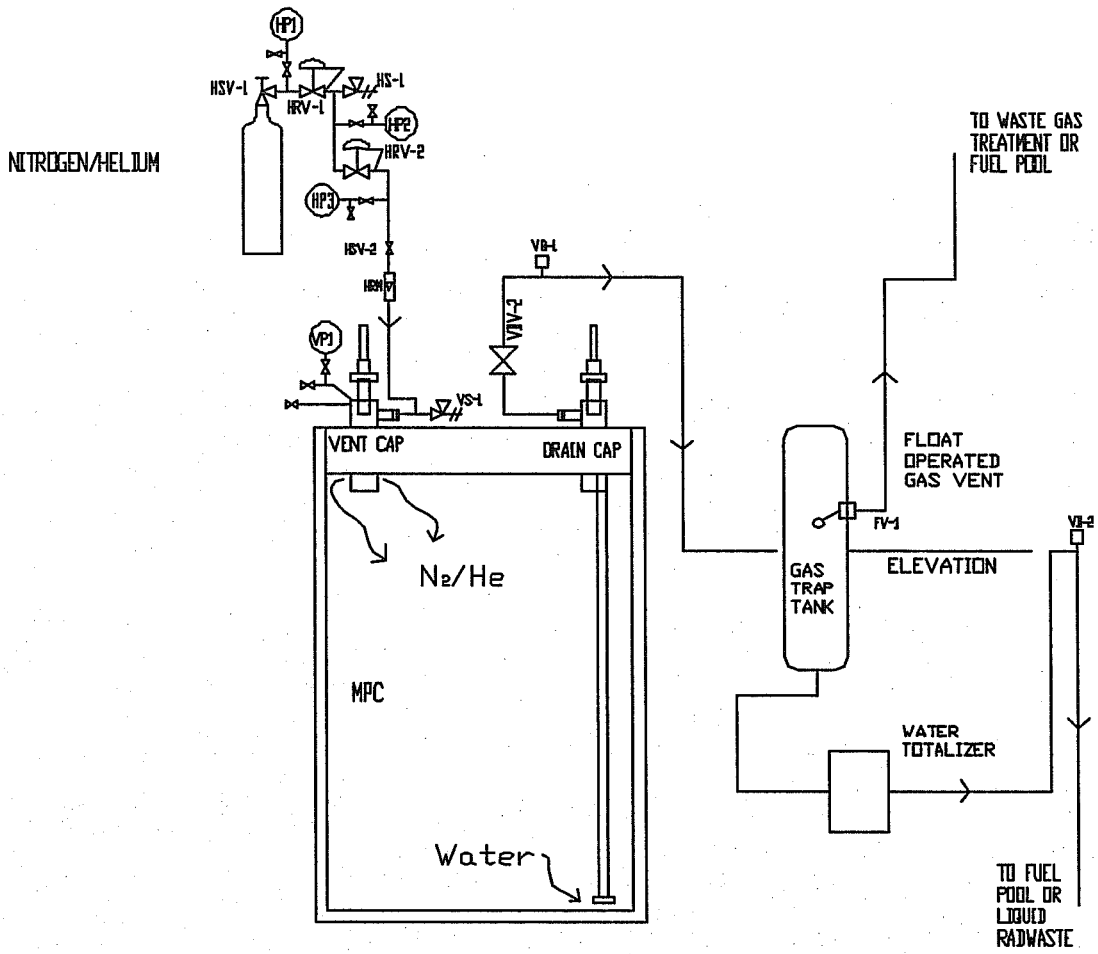

Figure 8.1.21; MPC Blowdown, Example P&I D

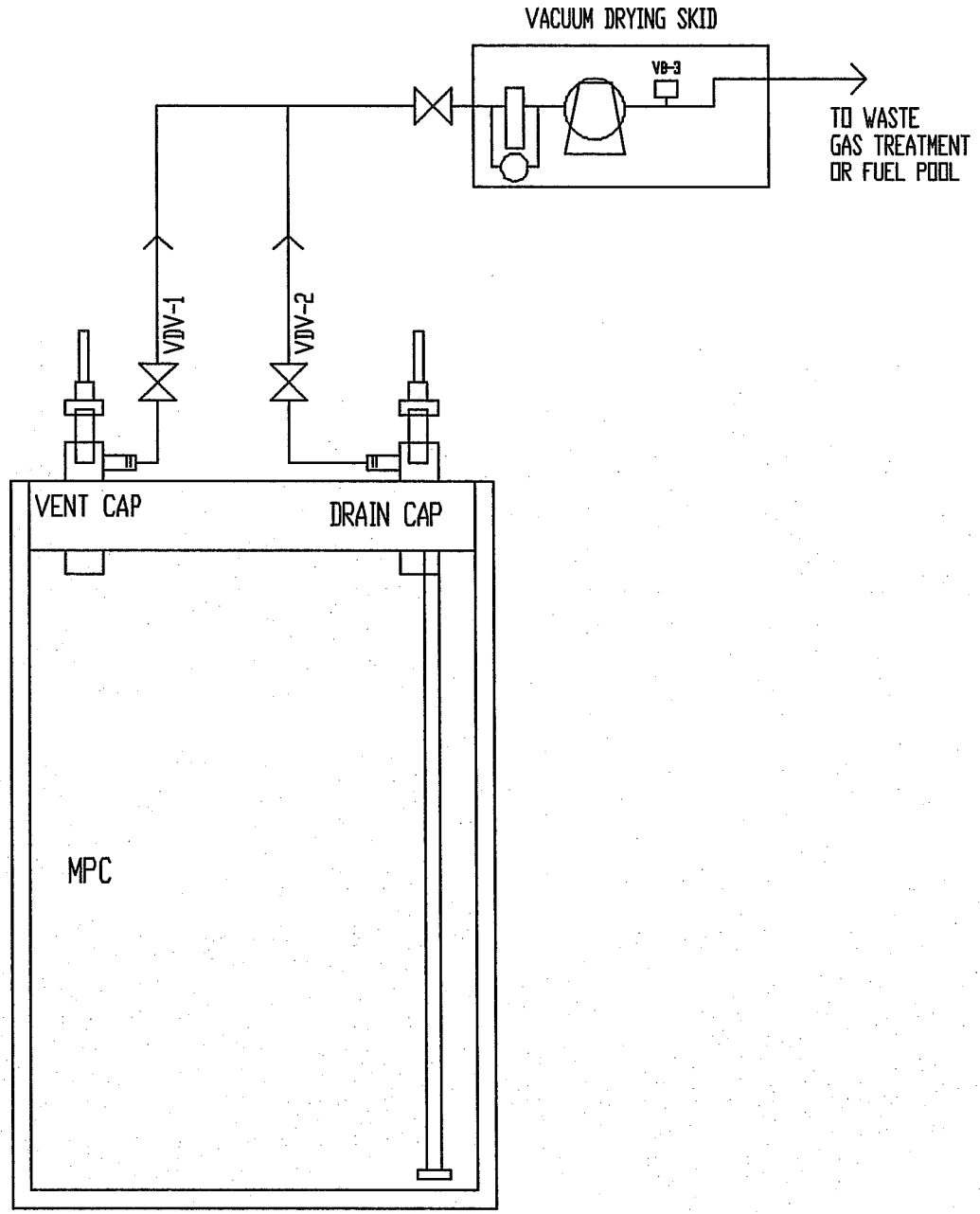

Figure 8.1.22a; Vacuum Drying System, Example P&I D

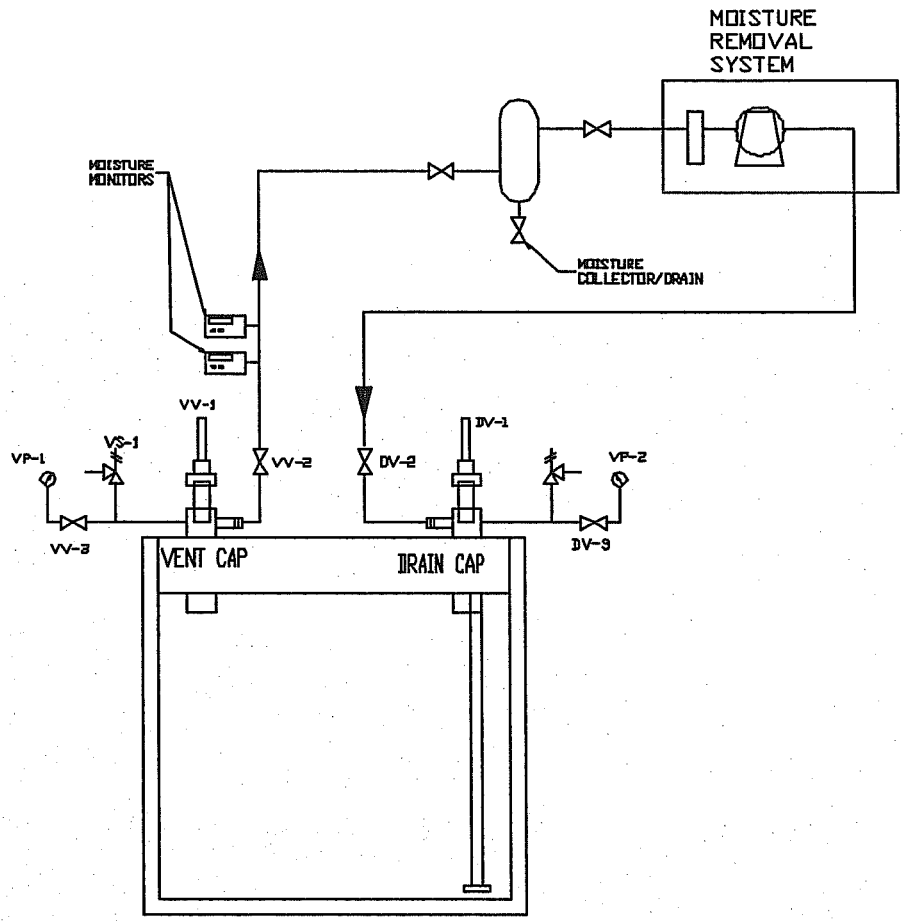

Figure 8.1.22b; forced Helium Dehydration System, Example P&I D

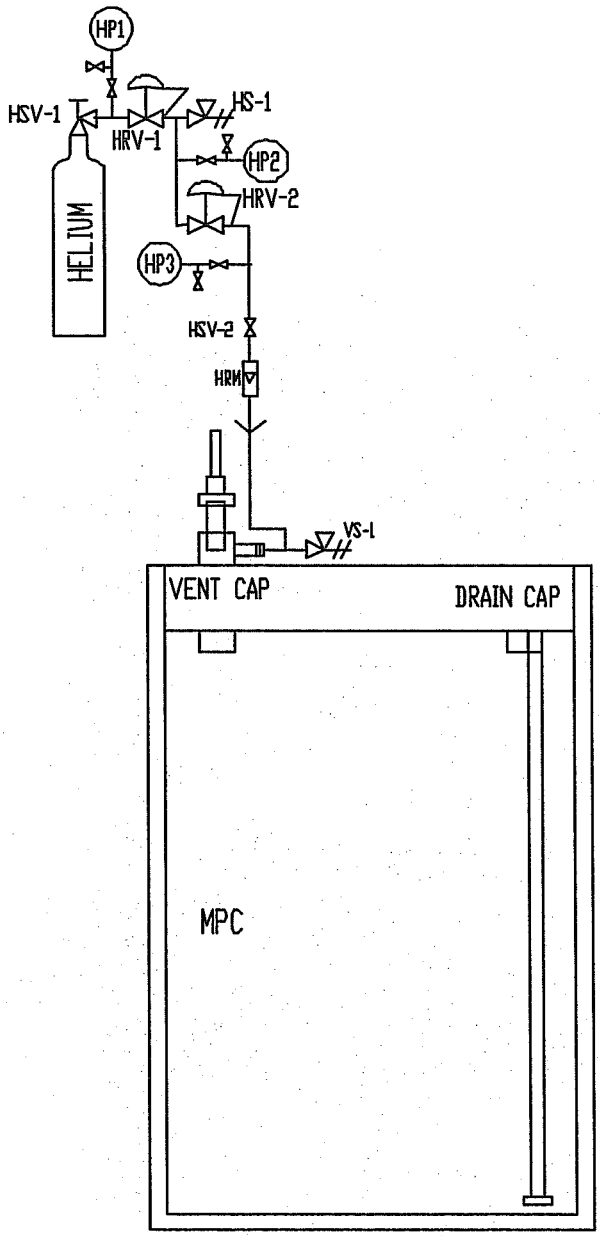

Figure 8.1.23; Helium Backfill System, Example P&I D

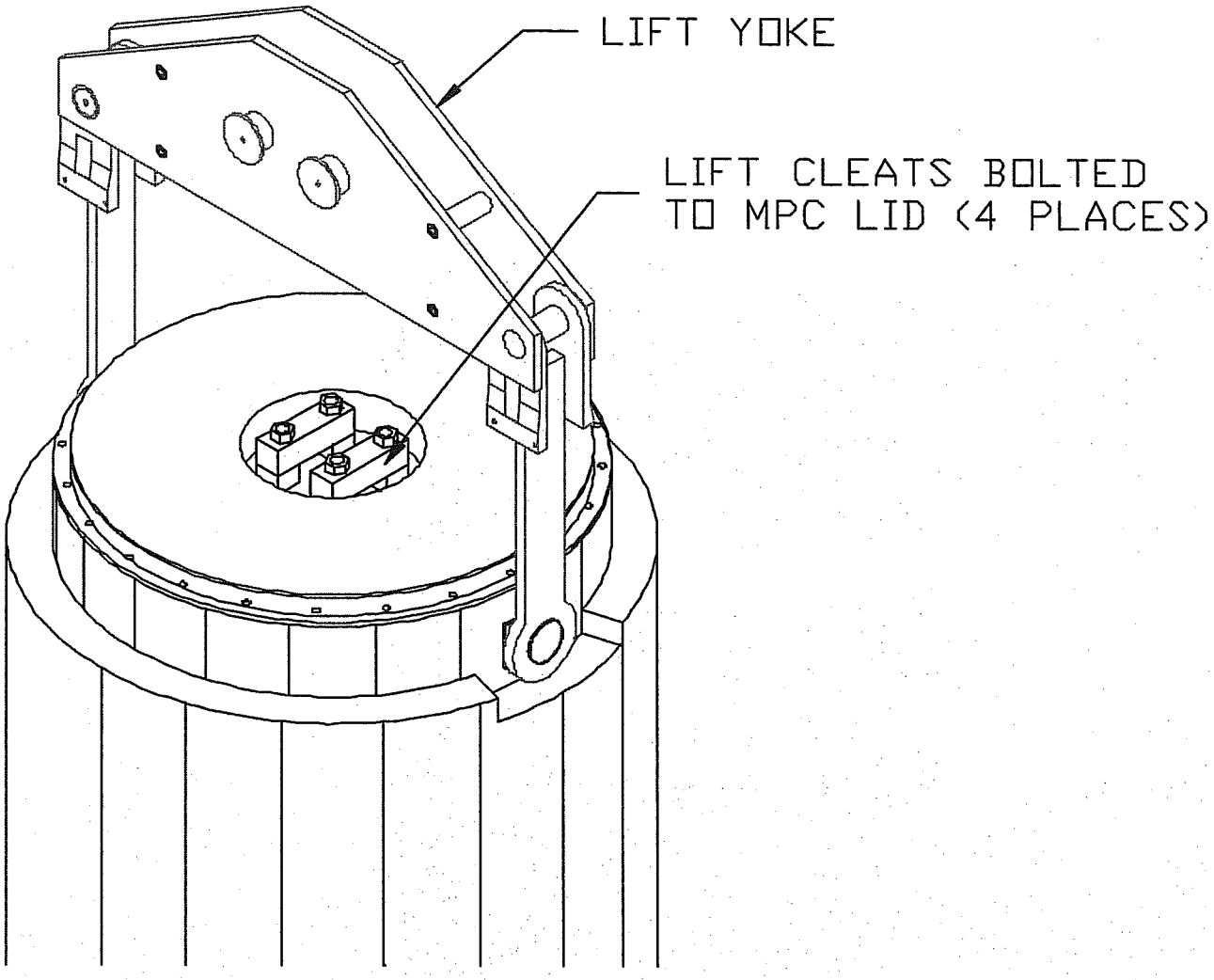

Figure 8.1.24; MPC Lift Cleats

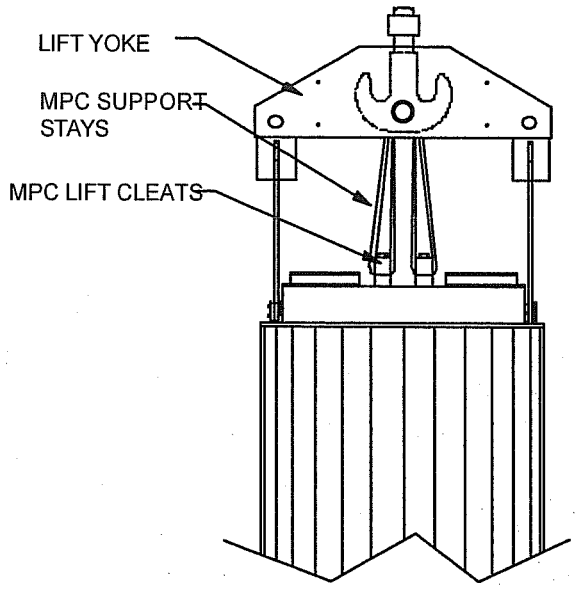

SINGLE-PIN ARRANGEMENT

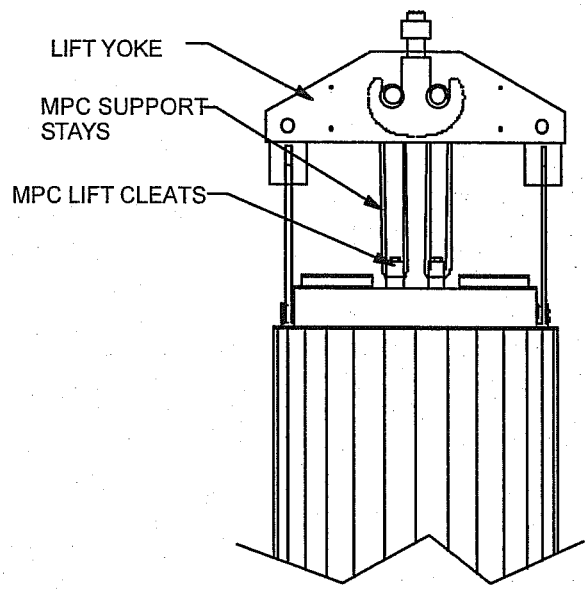

DOUBLE-PIN ARRANGEMENT

Figure 8.1.25; MPC Slings

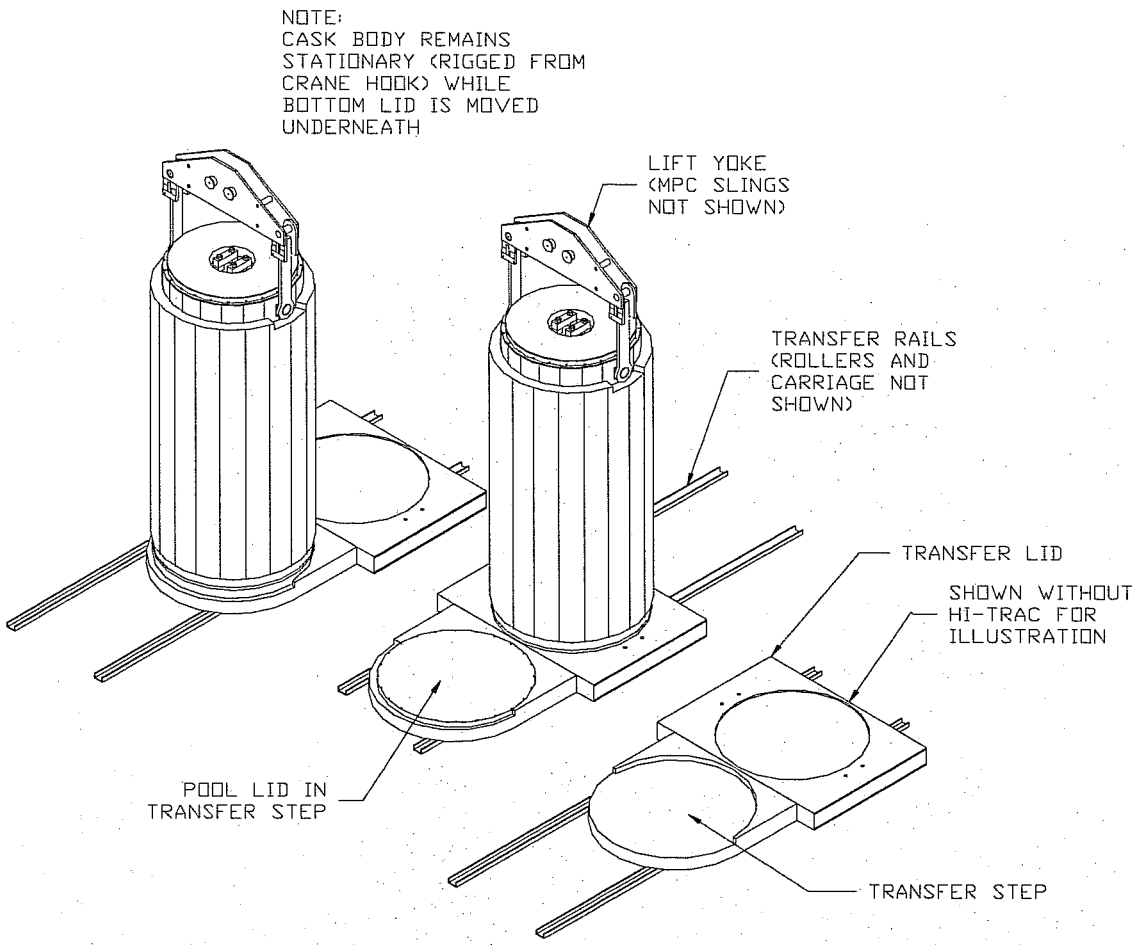

Figure 8.1.26; HI-TRAC Bottom Lid Replacement

(Not Required for HI-TRAC 100D and 125D)

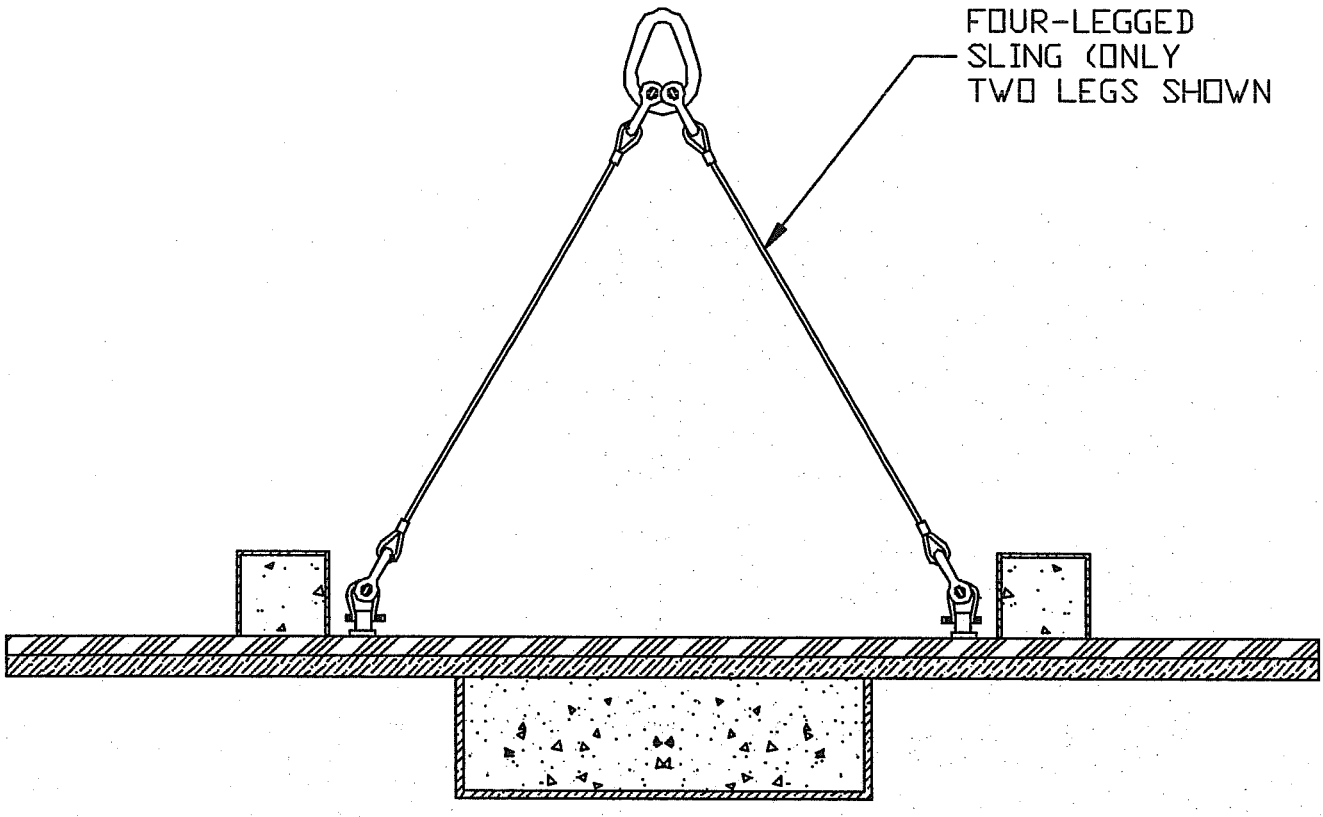

Figure 8.1.27; HI-STORM Lid Rigging

(HI-STORM 100 Lid Shown)

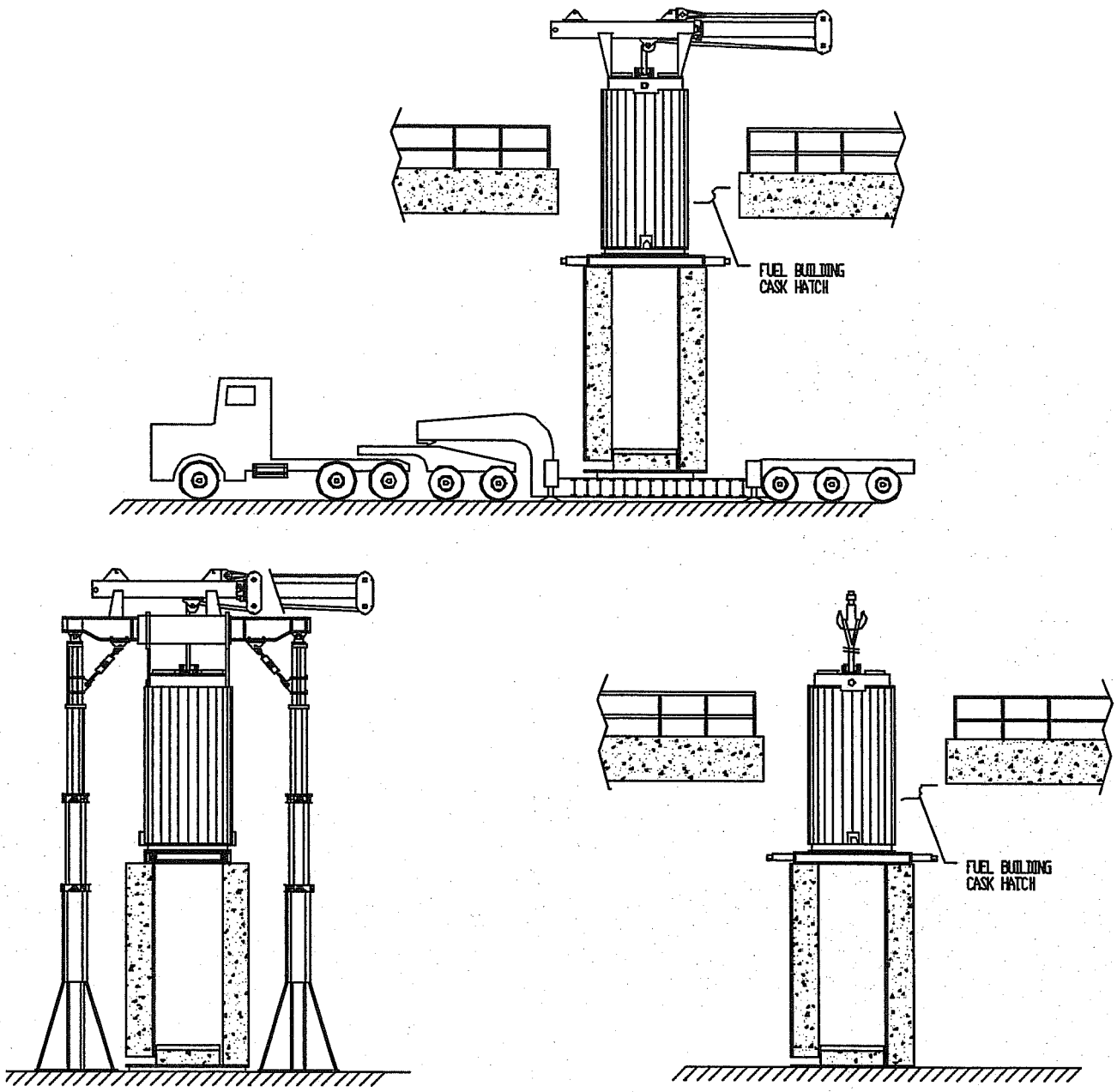

Figure 8.1.28; Sample MPC Transfer Options (HI-TRAC with Transfer Lid Shown)

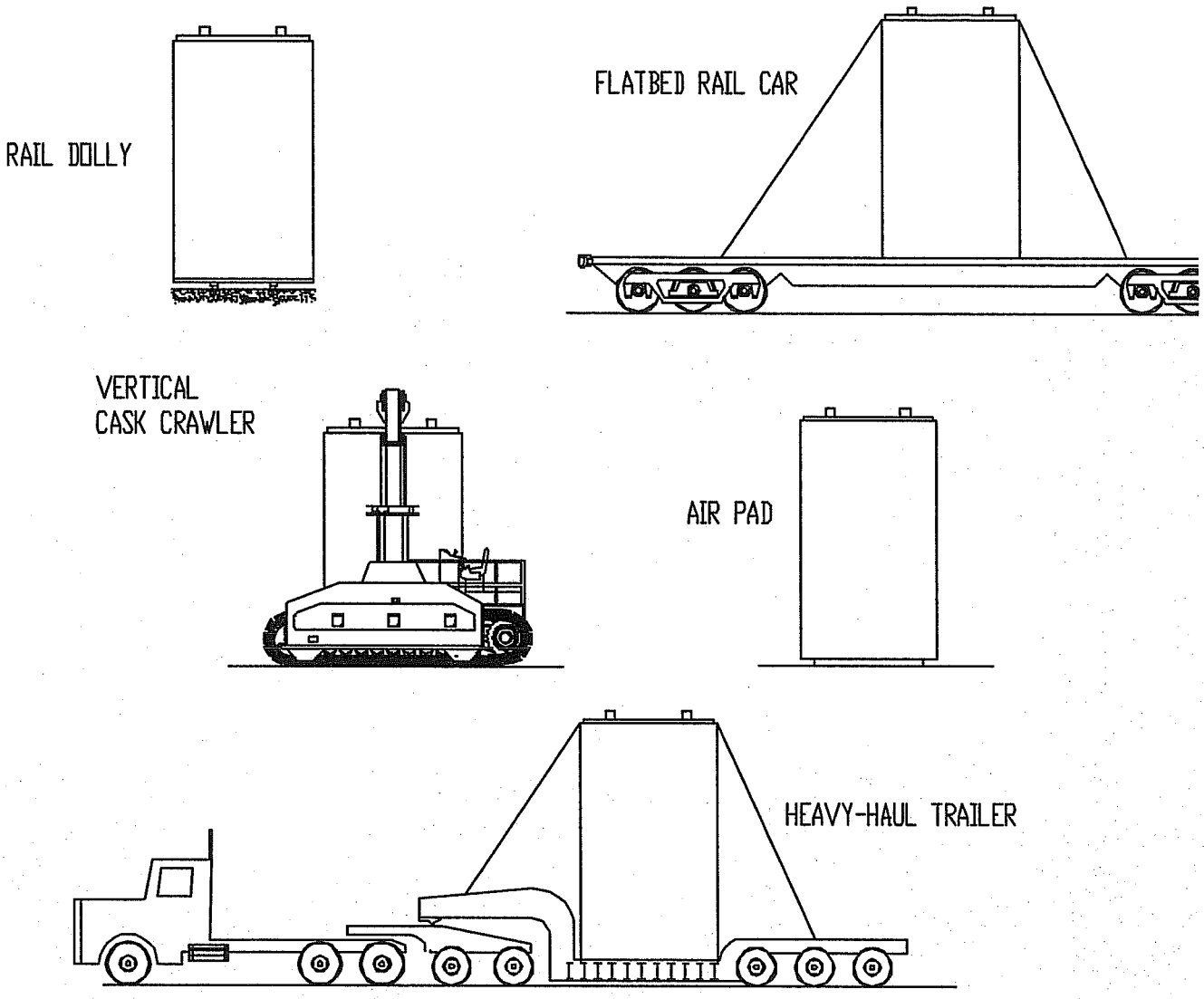

Figure 8.1.29a; Sample HI-STORM Transfer Options

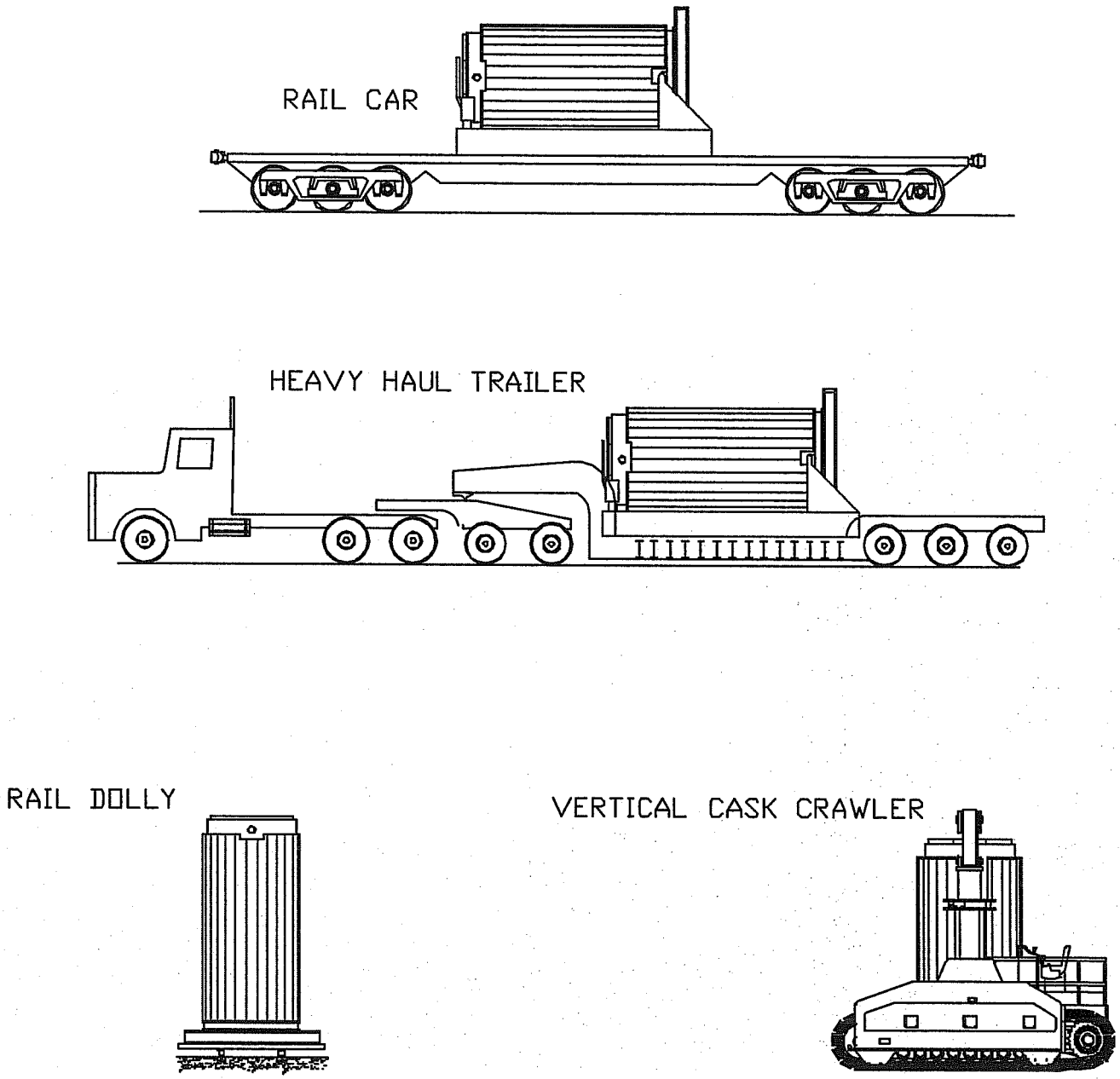

Figure 8.1.29b; Sample HI-TRAC Transfer Options (HI-TRAC 100/125 Shown)

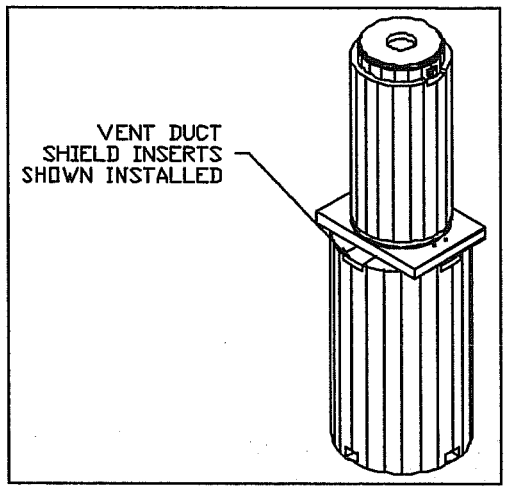

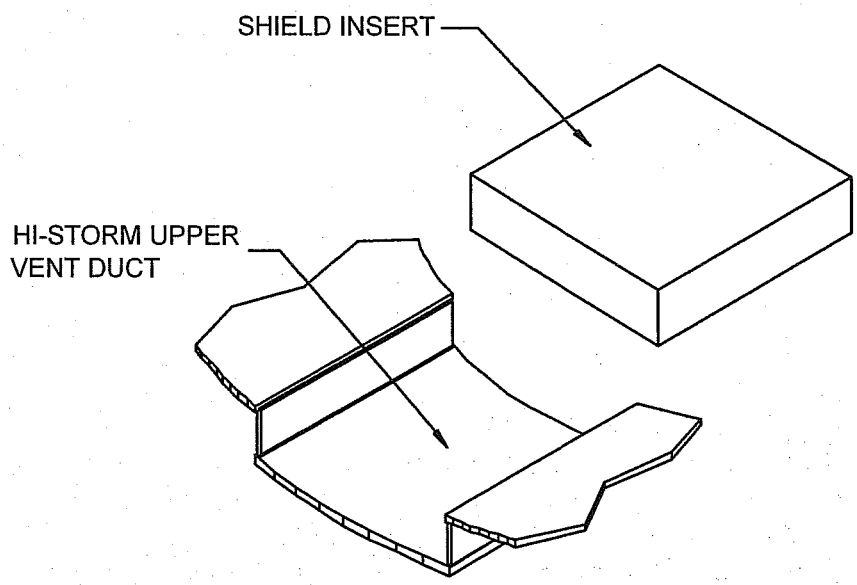

Figure 8.1.30; Sample HI-STORM Vent Duct Shield Inserts

(Not Required for HI-STORM 100S)

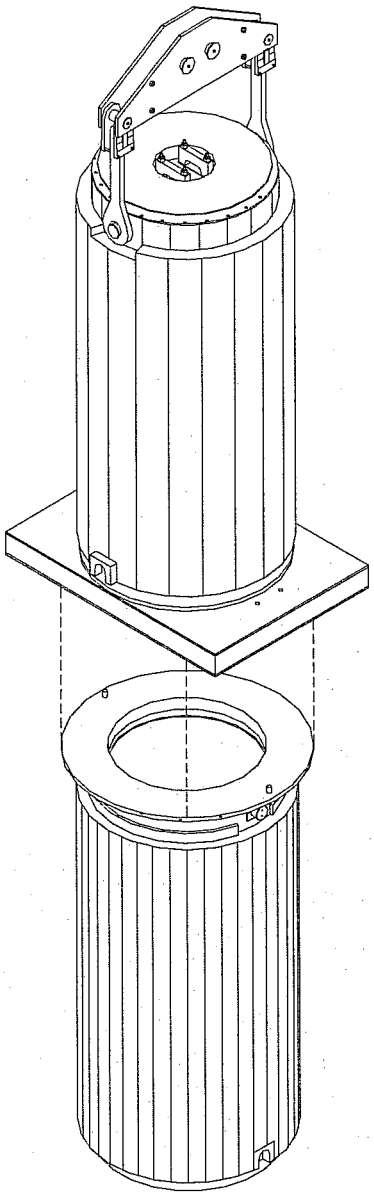

HI-TRAC 100 / 125

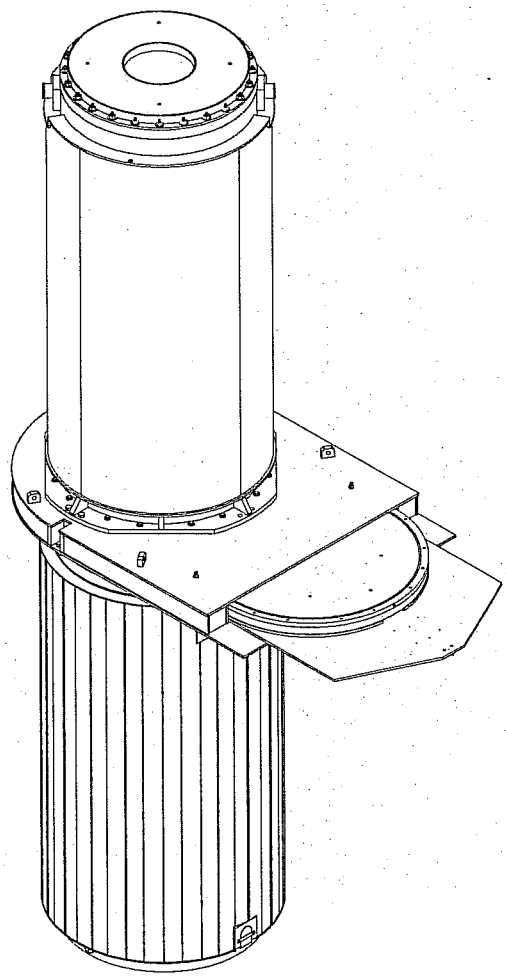

HI-TRAC 100D / 125D with Mating Device

Figure 8.1.31; HI-TRAC Alignment Over HI-STORM

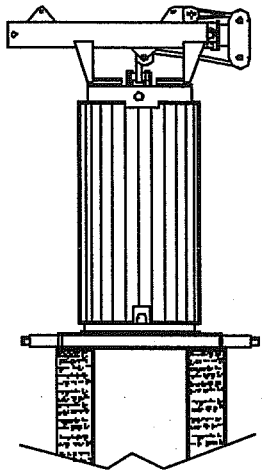

MOUNTED TO THE HI-TRAC LID

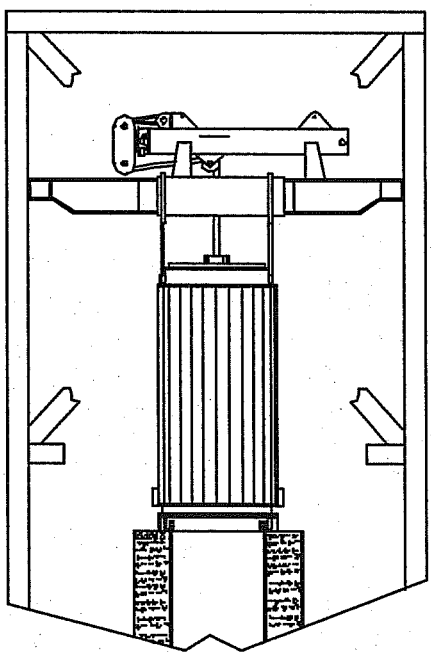

MOUNTED TO A CASK TRANSFER GANTRY

Figure 8.1.32; Examples of an MPC Downloader

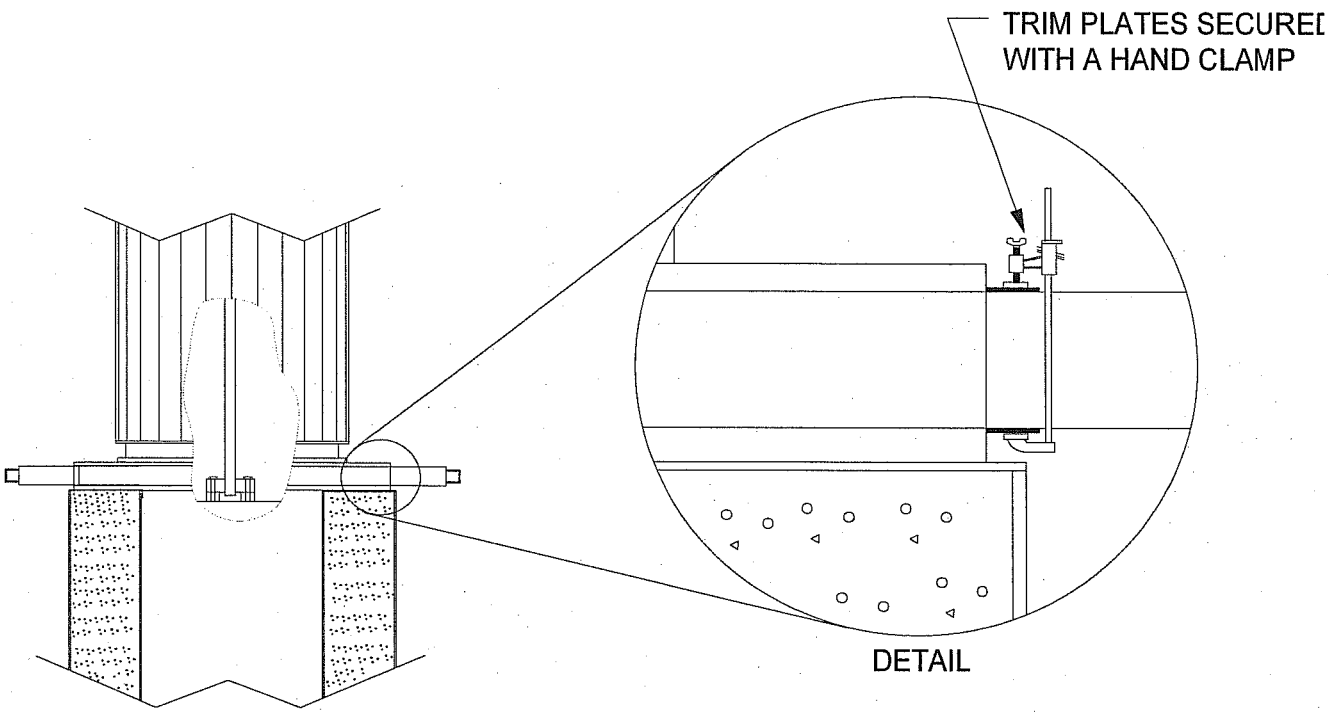

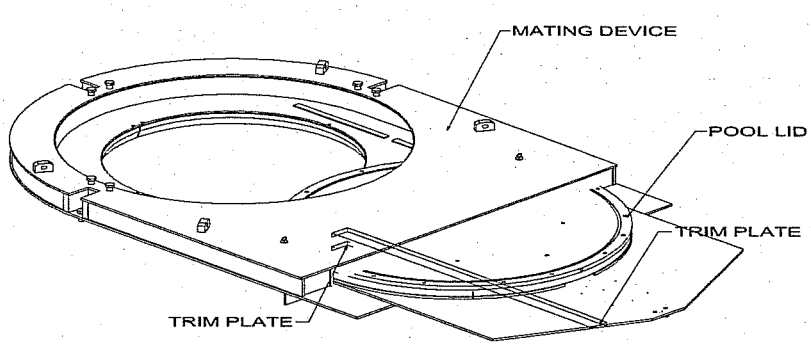

(HI-TRAC 100D and 125D ONLY)

Figure 8.1.33; Trim Plate Locations

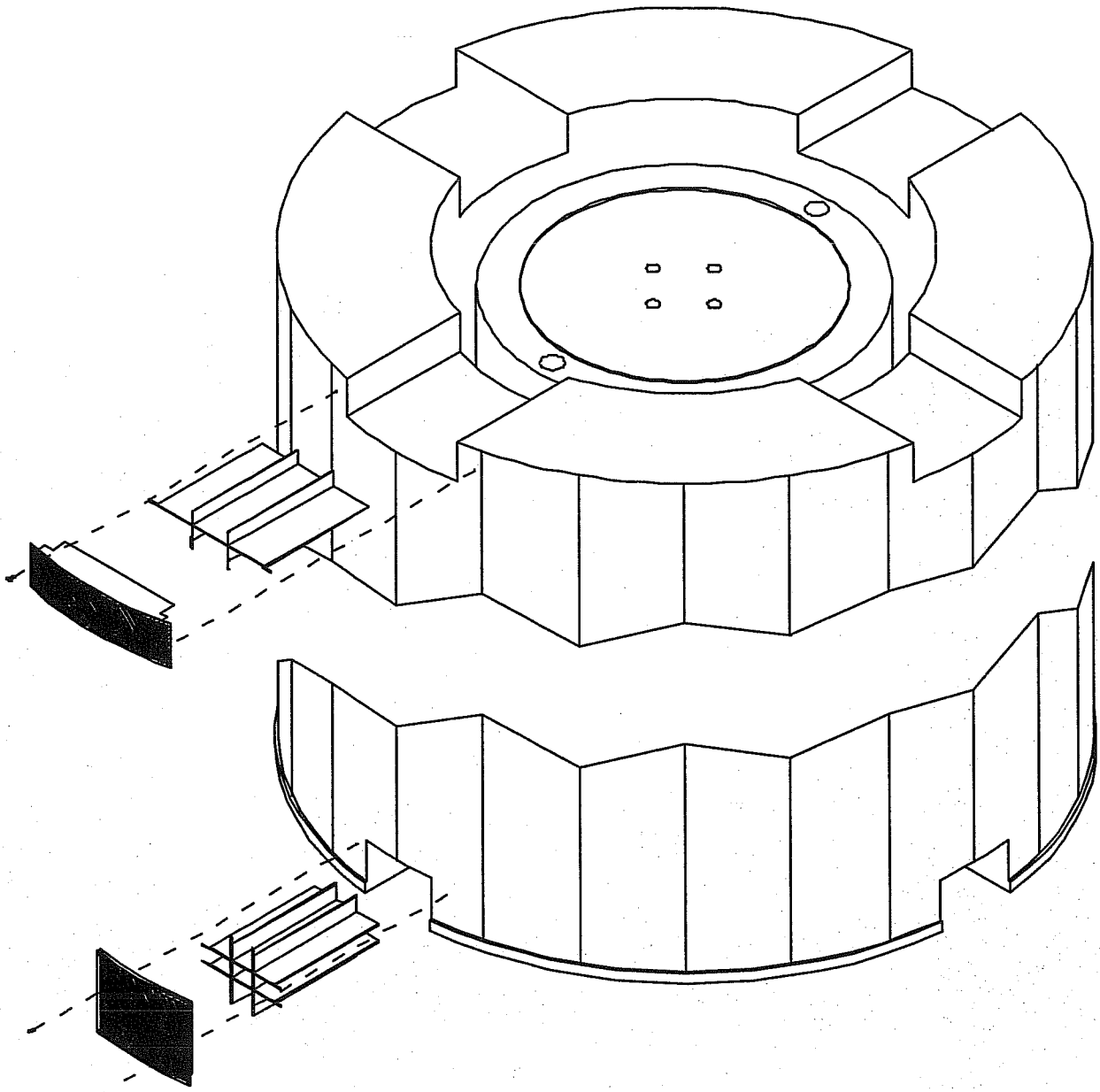

Figure 8.1.34a; Typical HI-STORM Vent Screen and Gamma Shield Cross Plate Installation

Figure 8.1.34b

Intentionally Deleted

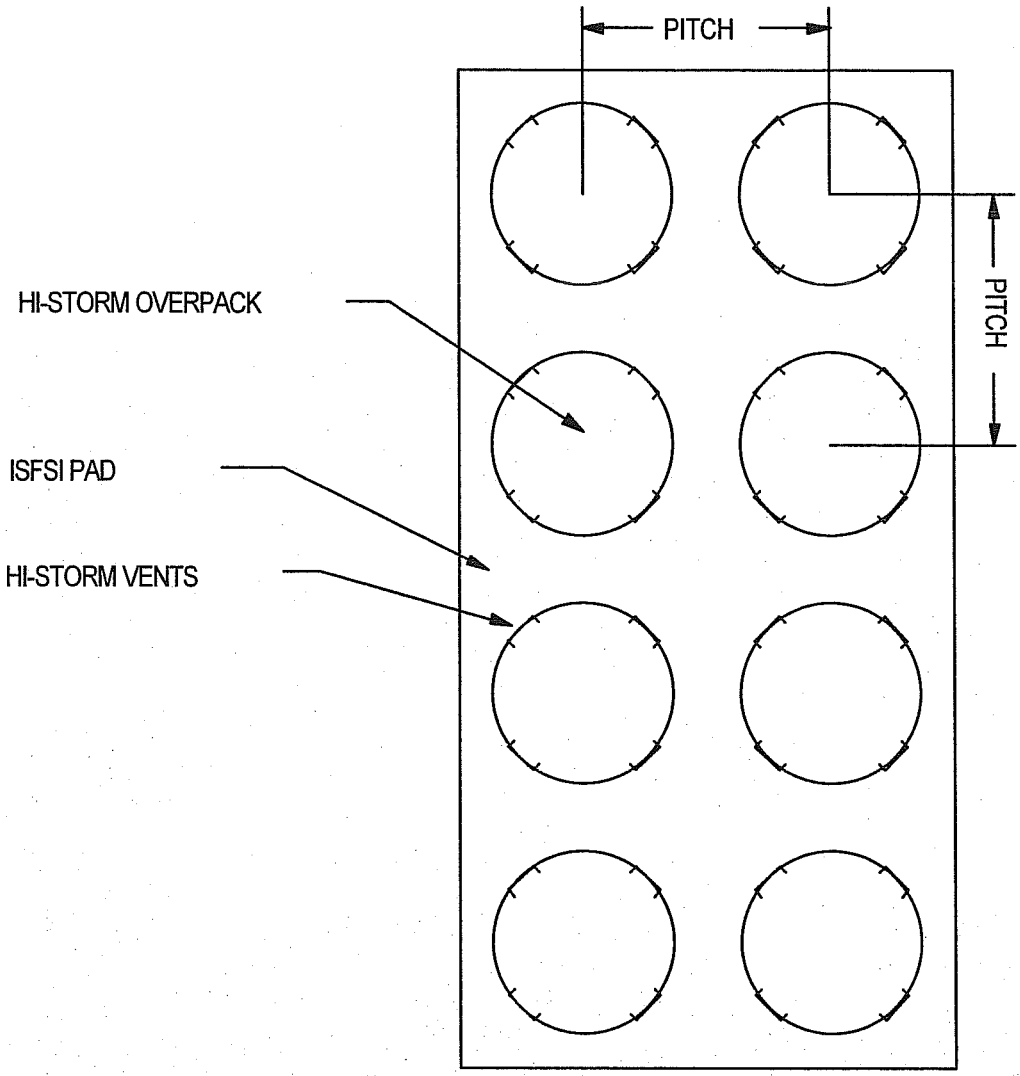

Figure 8.1.35; HI-STORM Placement of the ISFSI Pad

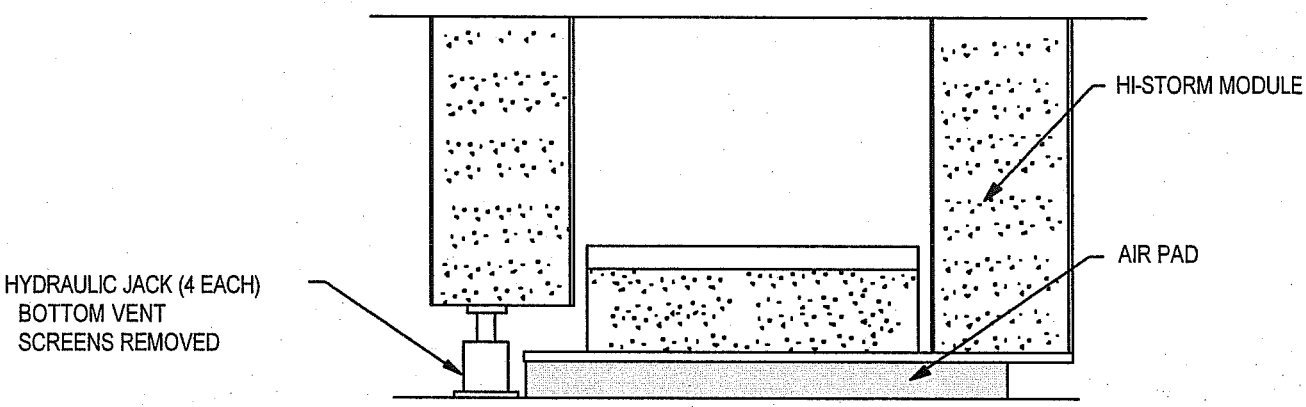

Figure 8.1.36; HI-STORM Jacking

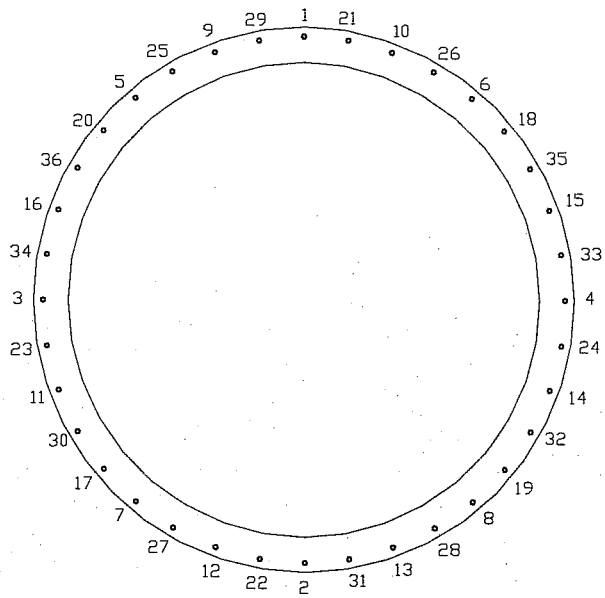

HI-TRAC 100 / 125
BOTTOM LID
(POOL LID OR
TRANSFER LID)

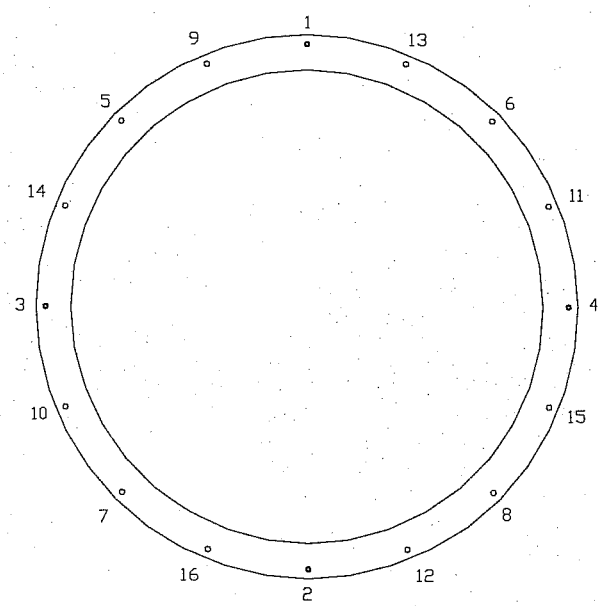

HI-TRAC
100D / 125D
POOL LID

Figure 8.1.37; HI-TRAC Lid Bolt Torquing Pattern

8.2 ISFSI OPERATIONS

The HI-STORM 100 System heat removal system is a totally passive system. Maintenance on the HI-STORM system is typically limited to cleaning and touch-up painting of the overpacks, repair and replacement of damaged vent screens, and removal of vent blockages (e.g., leaves, debris). The heat removal system operability surveillance should be performed after any event that may have an impact on the safe functioning of the HI-STORM system. These include, but are not limited to, wind storms, heavy snow storms, fires inside the ISFSI, seismic activity, flooding of the ISFSI, and/or observed animal or insect infestations. The responses to these conditions involve first assessing the dose impact to perform the corrective action (inspect the HI-STORM overpack, clear the debris, check the cask pitch, and/or replace damaged vent screens), perform the corrective action, verify that the system is operable (check ventilation flow paths and radiation). In the event of significant damage to the HI-STORM, the situation may warrant removal of the MPC, and repair or replacement of the damaged HI-STORM overpack. If necessary, the procedures in Section 8.1 may be used to reposition a HI-STORM overpack for minor repairs and maintenance. In extreme cases, Section 8.3 may be used as guidance for unloading the MPC from the HI-STORM.

Note:

The heat removal system operability surveillance involves performing a visual examination on the HI-STORM exit and inlet vent screens to ensure that the vents remain clear or verifying the temperature rise from ambient to outlet is within prescribed limits. The metallic vent screens if damaged may allow leaves, debris or animals to enter the duct and block the flow of air to the MPC.

ALARA Warning:

Operators should practice ALARA principals when inspecting the vent screens. In most cases, binoculars allow the operator to perform the surveillance from a low dose area.

8.2.1 Perform the heat removal operability surveillance.

8.2.2 ISFSI Security Operations shall be performed in accordance with the approved site security program plan.

HOLTEC INTERNATIONAL COPYRIGHTED MATERIAL

8.3 PROCEDURE FOR UNLOADING THE HI-STORM 100 SYSTEM IN THE SPENT FUEL POOL

8.3.1 Overview of HI-STORM 100 System Unloading Operations

ALARA Note:
The procedure described below uses the weld removal system to remove the welds necessary to enable the MPC lid to be removed. Users may opt to remove some or all of the welds using hand operated equipment. The decision should be based on dose rates, accessibility, degree of weld removal, and available tooling and equipment.

The HI-STORM 100 System unloading procedures describe the general actions necessary to prepare the MPC for unloading, flood the MPC cavity, remove the lid welds, unload the spent fuel assemblies, and recover the HI-TRAC and empty MPC. Special precautions are outlined to ensure personnel safety during the unloading operations, and to prevent the risk of MPC over pressurization and thermal shock to the stored spent fuel assemblies. Figure 8.3.1 shows a flow diagram of the HI-STORM unloading operations. Figure 8.3.2 illustrates the major HI-STORM unloading operations.

Refer to the boxes of Figure 8.3.2 for the following description. The MPC is recovered from HI-STORM either at the ISFSI or the fuel building using the same methodologies as described in Section 8.1 (Box 1). The HI-STORM lid is removed, the vent duct shield inserts are installed, the alignment device (or mating device with pool lid for HI-TRAC 100D and 125D) is positioned, and the MPC lift cleats are attached to the MPC. The exit vent screens and gamma shield cross plates are removed as necessary. MPC slings are attached to the MPC lift cleat and positioned on the MPC lid. HI-TRAC is positioned on top of HI-STORM (Box 2) and the slings are brought through the HI-TRAC top lid. The MPC is raised into HI-TRAC, the HI-TRAC doors (or mating device drawer) are closed and the locking pins are installed. If the mating device and HI-TRAC 100D or 125D are used, the pool lid is bolted to the HI-TRAC. The HI-TRAC is removed from on top of HI-STORM. If the HI-TRAC 100D and 125D are not used, the HI-TRAC is positioned in the transfer slide and the transfer lid is replaced with the pool lid (Box 3) using the same methodology as with the loading operations.

If the MPC contains high burn-up fuel, a Supplemental Cooling System (SCS) (if required) is connected to the HI-TRAC annulus following transfer from the HI-STORM to the HI-TRAC and used to circulate coolant to maintain fuel cladding temperatures below ISG-11 Rev. 3 limits. HI-TRAC and its enclosed MPC are returned to the designated preparation area and the MPC slings and MPC lift cleats are removed. The temporary shield ring is installed on the HI-TRAC upper section and filled with plant demineralized water. The HI-TRAC top lid is removed[1] (Box 4) and a water flush is performed on the annulus. Water is fed into the annulus through the drain port and allowed to cool the MPC shell. After a predetermined period (based on the fuel conditions), cover the annulus and HI-TRAC top surfaces to protect them from debris produced when removing the MPC lid. The weld removal system is installed (Box 7) and the MPC vent and drain ports are accessed (Box 5). The vent RVOA is attached to the vent port and an

[1] Users with the optional HI-TRAC Lid Spacer shall modify steps in their procedures to install and remove the spacer together with top lid.

HOLTEC INTERNATIONAL COPYRIGHTED MATERIAL

evacuated sample bottle is connected. The vent port is slightly opened to allow the sample bottle to obtain a gas sample from inside the MPC. A gas sample is performed to assess the condition of the fuel assembly cladding. A vent line is attached to the vent port and the MPC is vented to the fuel building ventilation system or spent fuel pool as determined by the site's radiation protection personnel. The MPC is filled with water (borated as required) at a controlled rate to avoid overpressuring the MPC (Box 6) and the supplemental cooling is terminated (if used). The weld removal system then removes the MPC lid-to-shell weld. The weld removal system is removed with the MPC lid left in place (Box 7).

The top surfaces of the HI-TRAC and MPC are cleared of metal shavings. The inflatable annulus seal is installed and pressurized. The MPC lid is rigged to the lift yoke or lid retention system and the lift yoke is engaged to HI-TRAC lifting trunnions. If weight limitations require, the neutron shield jacket is drained of water. HI-TRAC is placed in the spent fuel pool and the MPC lid is removed (Boxes 8 and 9). All fuel assemblies are returned to the spent fuel storage racks and the MPC fuel cells are vacuumed to remove any assembly debris and crud (Box 10). HI-TRAC and MPC are returned to the designated preparation area (Box 11) where the MPC water is pumped back into the spent fuel pool or liquid radwaste facility. The annulus water is drained and the MPC and overpack are decontaminated (Box 12 and 13).

8.3.2 HI-STORM Recovery from Storage

Note:
The MPC transfer may be performed using the MPC downloader or the overhead crane.

1. Recover the MPC from HI-STORM as follows:

   a. If necessary, perform a transport route walkdown to ensure that the cask transport conditions are met.

   b. Transfer HI-STORM to the fuel building or site designated location for the MPC transfer.

   c. Position HI-STORM under the lifting device.

   d. Remove the HI-STORM lid nuts, washers and studs or lid closure bolts.

   e. Remove the HI-STORM lid lifting hole plugs and install the lid lifting sling. See Figure 8.1.27.

Note:
The specific sequence for vent screen, temperature element, and gamma shield cross plate removal may vary based on the mode(s) or transport.

   f. Remove the HI-STORM exit vent screens, temperature elements and gamma shield cross plates. See Figure 8.1.34a and b.

Warning:
Unless the lift is single-failure proof (or equivalent safety factor) for the HI-STORM lid, the lid shall be kept less than 2 feet above the top surface of the overpack. This is performed to protect the MPC lid from a potential HI-STORM 100 lid drop.

HOLTEC INTERNATIONAL COPYRIGHTED MATERIAL

g. Remove the HI-STORM lid. See Figure 8.1.27.

h. Install the alignment device (or mating device with pool lid for HI-TRAC 100D and 125D) and vent duct shield inserts (HI-STORM 100 only). See Figure 8.1.30.

i. Deleted.

j. Remove the MPC lift cleat hole plugs and install the MPC lift cleats and MPC slings to the MPC lid. See Table 8.1.5 for torque requirements.

k. If necessary, install the top lid on HI-TRAC. See Figure 8.1.9 for rigging. See Table 8.1.5 for torque requirements.

l. Deleted.

2. If necessary, configure HI-TRAC with the transfer lid (Not required for HI-TRAC 100D and 125D):

ALARA Warning:
The bottom lid replacement as described below may only be performed on an empty (i.e., no MPC) HI-TRAC.

a. Position HI-TRAC vertically adjacent to the transfer lid. See Section 8.1.2.

b. Remove the bottom lid bolts and plates and store them temporarily.

c. Raise the empty HI-TRAC and position it on top of the transfer lid.

d. Inspect the pool lid bolts for general condition. Replace worn or damaged bolts with new bolts.

e. Install the transfer lid bolts. See Table 8.1.5 for torque requirements.

3. At the site's discretion, perform a HI-TRAC receipt inspection and cleanliness inspection in accordance with a site-specific inspection checklist.

Note:
If the HI-TRAC is expected to be operated in an environment below 32 °F, the water jacket shall be filled with an ethylene glycol solution (25% ethylene glycol). Otherwise, the jacket shall be filled with demineralized water.

4. If previously drained, fill the neutron shield jacket with plant demineralized water or an ethylene glycol solution (25% ethylene glycol) as necessary. Ensure that the fill and drain plugs are installed.

5. Engage the lift yoke to the HI-TRAC lifting trunnions.

6. Align HI-TRAC over HI-STORM and mate the overpacks. See Figure 8.1.31.

7. If necessary, install the MPC downloader.

HOLTEC INTERNATIONAL COPYRIGHTED MATERIAL

8. Remove the transfer lid (or mating device) locking pins and open the doors (mating device drawer).

9. At the user's discretion, install trim plates to cover the gap above and below the door (drawer for 100D and 125D). The trim plates may be secured using hand clamps or any other method deemed suitable by the user. See Figure 8.1.33.

10. Attach the ends of the MPC sling to the lifting device or MPC downloader. See Figure 8.1.32.

ALARA Warning:

If trim plates are not used, personnel should remain clear of the immediate door area during MPC downloading since there may be some radiation streaming during MPC raising and lowering operations.

Caution:

Limitations for the handling an MPC containing high burn-up fuel in a HI-TRAC are evaluated and established on a canister basis to ensure that acceptable cladding temperatures are not exceeded. Refer to FSAR Section 4.5 for guidance. For MPCs containing high burn-up fuel, the Supplemental Cooling System (SCS) (if required) is used to prevent fuel cladding temperatures from exceeding ISG-11 Rev. 3 limits. Operation of the SCS typically begins as soon as the MPC is placed in the HI-TRAC and continues until MPC re-flooding operations have commenced. Staging and check-out of the SCS shall be completed prior to transferring the MPC to the HI-TRAC to minimize the time required to begin its operation.

11. Raise the MPC into HI-TRAC.

12. Verify the MPC is in the full-up position.

13. Close the HI-TRAC doors (or mating device drawer) and install the door locking pins.

14. For the HI-TRAC 100D and 125D, bolt the pool lid to the HI-TRAC. See Table 8.1.5 for torque requirements.

15. Lower the MPC onto the transfer lid doors (or pool lid for 100D and 125D).

16. Disconnect the slings from the MPC lift cleats.

Note:

For the HI-TRAC 100 and HI-TRAC 125, operation of the SCS may need to be postponed until the pool lid is in place on the HI-TRAC. In any event, supplemental cooling shall begin before time limits established by the canister thermal evaluation are exceeded.

Warning:

At the start of SCS operations, the annulus fill water may flash to steam due to high MPC shell temperatures. Users may select the location and means of filling the annulus. Water addition should be preformed in a slow and controlled manner until water steam generation has ceased.

17. If required, attach the SCS to the HI-TRAC annulus and begin circulating coolant. (See Figure 2.C.1). Continue operation of the SCS until MPC re-flooding operations have commenced.

18. If necessary, remove the MPC downloader from the top of HI-TRAC.

HOLTEC INTERNATIONAL COPYRIGHTED MATERIAL

19. Remove HI-TRAC from the top of HI-STORM.

8.3.3 Preparation for Unloading:

1. Replace the transfer lid with the pool lid as follows (Not required for HI-TRAC 100D amd 125D):

   a. Lower the lift yoke and attach the MPC slings between the lift cleats and the lift yoke. See Figure 8.1.25.

   b. Engage the lift yoke to the HI-TRAC lifting trunnions.

   c. Deleted.

   d. Raise HI-TRAC and position the transfer lid approximately one inch above the transfer step. See Figure 8.1.26.

   e. Raise the transfer slide carriage so the transfer carriage is supporting the transfer lid bottom. Remove the transfer lid bolts and store them temporarily.

ALARA Warning:
Clear all personnel away from the immediate operations area. The transfer slide carriage and jacks are remotely operated. The carriage has fine adjustment features to allow precise positioning of the lids.

   f. Lower the transfer carriage and position the pool lid under HI-TRAC.

   g. Raise the transfer slide carriage to place the pool lid against the HI-TRAC bottom lid bolting flange.

   h. Inspect the bottom lid bolts for general condition. Replace worn or damaged bolts with new bolts.

   i. Install the pool lid bolts. See Table 8.1.5 for torque requirements.

   j. If required, attach the SCS to the HI-TRAC annulus and begin circulating coolant. (See Figure 2.C.1) Continue operation of the SCS until MPC re-flooding operations have commenced.

   k. Raise and remove the HI-TRAC from the transfer slide.

   l. Disconnect the MPC slings and lift cleats.

   m. Deleted.

   n. Deleted.

2. Place HI-TRAC in the designated preparation area.

Warning:
Unless the lift is single-failure proof (or equivalent safety factor) the HI-TRAC top lid, the top lid shall be kept less than 2 feet above the top surface of the MPC. This is performed to protect the MPC lid from a potential lid drop.

3. Prepare for MPC cool-down as follows:

   a. Remove the top lid bolts and remove HI-TRAC top lid. See Figure 8.1.9 for rigging.

Warning:
At the start of annulus filling, the annulus fill water may flash to steam due to high MPC shell temperatures. Users may select the location and means of performing the annulus flush. Users may also elect the source of water and method for collecting the water flowing from the annulus. Water addition should be preformed in a slow and controlled manner until water steam generation has ceased. Water flush should be performed for a minimum of 33 hours at a flow rate of 10 GPM or as specified for the particular heat load of the MPC. . Annulus filling is only required if the SCS is not used.

   b. If necessary, perform annulus flush by injecting water into the HI-TRAC drain port and allowing the water to cool the MPC shell and lid.

4. If necessary, set the annulus water level to approximately 4 inches below the top of the MPC shell and install the annulus shield. Cover the annulus and HI-TRAC top surfaces to protect them from debris produced when removing the MPC lid.

5. Access the MPC as follows:

ALARA Note:
The following procedures describe weld removal using a machine tool head. Other methods may also be used. The metal shavings may need to be periodically vacuumed.

ALARA Warning:
Weld removal may create an airborne radiation condition. Weld removal must be performed under the direction of the user's Radiation Protection organization.

   a. Install bolt plugs and/or waterproof tape from HI-TRAC top bolt holes.

   b. Using the marked locations of the vent and drain ports, core drill the closure ring and vent and drain port cover plates.

6. Remove the closure ring section and the vent and drain port cover plates.

ALARA Note:
The MPC vent and drain ports are equipped with metal-to-metal seals to minimize leakage and withstand the long-term effects of temperature and radiation. The vent and drain port design prevents the need to hot tap into the penetrations during unloading operation and eliminate the risk of a pressurized release of gas from the MPC.

7. Take an MPC gas sample as follows:

Note:
Users may select alternate methods of obtaining a gas sample.

   a. Attach the RVOAs (See Figure 8.1.16).

   b. Attach a sample bottle to the vent port RVOA as shown on Figure 8.3.3.

HOLTEC INTERNATIONAL COPYRIGHTED MATERIAL

c. Using the vacuum drying system, evacuate the RVOA and Sample Bottle.

d. Slowly open the vent port cap using the RVOA and gather a gas sample from the MPC internal atmosphere.

e. Close the vent port cap and disconnect the sample bottle.

ALARA Note:
The gas sample analysis is performed to determine the condition of the fuel cladding in the MPC. The gas sample may indicate that fuel with damaged cladding is present in the MPC. The results of the gas sample test may affect personnel protection and how the gas is processed during MPC depressurization.

f. Turn the sample bottle over to the site's Radiation Protection or Chemistry Department for analysis.

g. Deleted.

8. Fill the MPC cavity with water as follows:

a. Open the vent and drain port caps using the RVOAs.

b. Deleted.

c. Deleted.

d. Deleted.

e. Deleted.

f. Deleted.

g. Deleted.

h. Deleted.

Caution:
The introduction of water into the MPC may create steam. Re-flooding operations shall be closely controlled to insure that the internal pressure in the MPC does not exceed design limits. The water flow rate shall be adjusted to maintain the internal pressure below design limits.

i. Prepare the MPC fill and vent lines as shown on Figure 8.1.20. Route the vent port line several feet below the spent fuel pool surface or to the radwaste gas facility. Attach the vent line to the MPC vent port and slowly open the vent line valve to depressurize the MPC.

Note:
When unloading MPCs requiring soluble boron, the boron concentration of the water shall be checked in accordance with Tables 2.1.14 and 2.1.16 before and during operations with fuel and water in the MPC.

HOLTEC INTERNATIONAL COPYRIGHTED MATERIAL

j. Attach the water fill line to the MPC drain port and slowly open the water supply valve and establish a pressure less than 90 psi. (Refer to Tables 2.1.14 and 2.1.16 for boron concentration requirements). Fill the MPC until bubbling from the vent line has terminated. Close the water supply valve on completion.

k. If used, cease operation of the SCS and remove the system from the HI-TRAC.

Caution:

Oxidation of Boral panels contained in the MPC may create hydrogen gas while the MPC is filled with water. Appropriate monitoring for combustible gas concentrations shall be performed prior to, and during MPC lid cutting operations. The space below the MPC lid shall be exhausted or purged with inert gas prior to, and during MPC lid cutting operations to provide additional assurance that flammable gas concentrations will not develop in this space.

l. Disconnect both lines from the drain and vent ports leaving the drain port cap open to allow for thermal expansion of the water during MPC lid weld removal.

m. Connect a combustible gas monitor to the MPC vent port and check for combustible gas concentrations prior to and periodically during weld removal activities. Purge or evacuate the gas space under the lid as necessary

n. Remove the MPC lid-to-shell weld using the weld removal system. See Figure 8.1.9 for rigging.

o. Vacuum the top surfaces of the MPC and HI-TRAC to remove any metal shavings.

9. Install the inflatable annulus seal as follows:

Caution:

Do not use any sharp tools or instruments to install the inflatable seal.

a. Remove the annulus shield.

b. Manually insert the inflatable seal around the MPC. See Figure 8.1.13.

c. Ensure that the seal is uniformly positioned in the annulus area.

d. Inflate the seal

e. Visually inspect the seal to ensure that it is properly seated in the annulus. Deflate, adjust and inflate the seal as necessary.

10. Place HI-TRAC in the spent fuel pool as follows:

a. If necessary for plant weight limitations, drain the water from the neutron shield jacket.

b. Engage the lift yoke to HI-TRAC lifting trunnions, remove the MPC lid lifting hole plugs and attach the MPC lid slings or lid retention system to the MPC lid.

c. If the lid retention system is used, inspect the lid bolts for general condition. Replace worn or damaged bolts with new bolts.

d. Install the lid retention system bolts if the lid retention system is used.

ALARA Note:
The optional Annulus Overpressure System is used to provide further protection against MPC external shell contamination during in-pool operations.

e. If used, fill the annulus overpressure system lines and reservoir with demineralized water and close the reservoir valve. Attach the annulus overpressure system to the HI-TRAC. See Figure 8.1.14.

f. Position HI-TRAC over the cask loading area with the basket aligned to the orientation of the spent fuel racks.

ALARA Note:
Wetting the components that enter the spent fuel pool may reduce the amount of decontamination work to be performed later.

g. Wet the surfaces of HI-TRAC and lift yoke with plant demineralized water while slowly lowering HI-TRAC into the spent fuel pool.

h. When the top of the HI-TRAC reaches the elevation of the reservoir, open the annulus overpressure system reservoir valve. Maintain the reservoir water level at approximately 3/4 full the entire time the cask is in the spent fuel pool.

i. If the lid retention system is used, remove the lid retention bolts when the top of HI-TRAC is accessible from the operating floor.

j. Place HI-TRAC on the floor of the cask loading area and disengage the lift yoke. Visually verify that the lift yoke is fully disengaged.

k. Apply slight tension to the lift yoke and visually verify proper disengagement of the lift yoke from the trunnions.

l. Remove the lift yoke, MPC lid and drain line from the pool in accordance with directions from the site's Radiation Protection personnel. Spray the equipment with demineralized water as they are removed from the pool.

m. Disconnect the drain line from the MPC lid.

HOLTEC INTERNATIONAL COPYRIGHTED MATERIAL

n. Store the MPC lid components in an approved location. Disengage the lift yoke from MPC lid. Remove any upper fuel spacers using the same process as was used in the installation.

o. Disconnect the lid retention system if used.

8.3.4 MPC Unloading

1. Remove the spent fuel assemblies from the MPC using applicable site procedures.

2. Vacuum the cells of the MPC to remove any debris or corrosion products.

3. Inspect the open cells for presence of any remaining items. Remove them as appropriate.

8.3.5 Post-Unloading Operations

1. Remove HI-TRAC and the unloaded MPC from the spent fuel pool as follows:

a. Engage the lift yoke to the top trunnions.

b. Apply slight tension to the lift yoke and visually verify proper engagement of the lift yoke to the trunnions.

c. Raise HI-TRAC until HI-TRAC flange is at the surface of the spent fuel pool.

ALARA Warning:
Activated debris may have settled on the top face of HI-TRAC during fuel unloading.

d. Measure the dose rates at the top of HI-TRAC in accordance with plant radiological procedures and flush or wash the top surfaces to remove any highly-radioactive particles.

e. Raise the top of HI-TRAC and MPC to the level of the spent fuel pool deck.

f. Close the annulus overpressure system reservoir valve.

g. Using a water pump, lower the water level in the MPC approximately 12 inches to prevent splashing during cask movement.

ALARA Note:
To reduce contamination of HI-TRAC, the surfaces of HI-TRAC and lift yoke should be kept wet until decontamination can begin.

h. Remove HI-TRAC from the spent fuel pool while spraying the surfaces with plant demineralized water.

i. Disconnect the annulus overpressure system from the HI-TRAC via the quick disconnect.

j. Place HI-TRAC in the designated preparation area.

k. Disengage the lift yoke.

l. Perform decontamination on HI-TRAC and the lift yoke.

HOLTEC INTERNATIONAL COPYRIGHTED MATERIAL

2. Carefully decontaminate the area above the inflatable seal. Deflate, remove, and store the seal in an approved plant storage location.
3. Using a water pump, pump the remaining water in the MPC to the spent fuel pool or liquid radwaste system.
4. Drain the water in the annulus area by connecting the drain line to the HI-TRAC drain connector.
5. Remove the MPC from HI-TRAC and decontaminate the MPC as necessary.
6. Decontaminate HI-TRAC.
7. Remove the bolt plugs and/or waterproof tape from HI-TRAC top bolt holes.
8. Return any HI-STORM 100 equipment to storage as necessary.

HOLTEC INTERNATIONAL COPYRIGHTED MATERIAL

LOCATION: ISFSI
RECOVER HI-STORM FROM STORAGE
LOCATION: CASK RECEIVING AREA
REMOVE HI-STORM EXIT VENT SCREENS AND CROSS PLATES
REMOVE HI-STORM LID
INSTALL HI-STORM ALIGNMENT DEVICE (OR MATING DEVICE) AND VENT DUCT SHIELD INSERTS
INSTALL MPC LIFT CLEATS
ATTACH MPC SLINGS
INSTALL TOP LID ON HI-TRAC
INSTALL MPC LIFT SLINGS
RAISE HI-TRAC AND MATE OVERPACKS
OPEN SHIELD DOORS (OR MATING DEVICE DRAWER)
ATTACH SLINGS TO LIFT DEVICE AND CLEAT
RAISE MPC INTO HI-TRAC
CLOSE HI-TRAC TRANSFER LID DOORS (HI-TRAC 100D and 125D - BOLT UP POOL LID)
REMOVE HI-TRAC FROM TOP OF HI-STORM
DISCONNECT MPC LIFT SLINGS
REPLACE TRANSFER LID WITH POOL LID (NOT FOR HI-TRAC 100D and 125D)
DISCONNECT MPC LIFT CLEAT
PLACE HI-TRAC IN DESIGNATED PREPARATION AREA
LOCATION: CASK PREPARATION AREA

REMOVE HI-TRAC TOP LID
FILL ANNULUS
INSTALL ANNULUS SHIELD
REMOVE MPC CLOSURE RING
REMOVE VENT PORT COVERPLATE WELD AND SAMPLE MPC GAS
FILL MPC CAVITY WITH WATER
REMOVE MPC LID TO SHELL WELD
INSTALL INFLATABLE SEAL
PLACE HI-TRAC IN SPENT FUEL POOL
LOCATION: SPENT FUEL POOL
REMOVE MPC LID
DISCONNECT DRAIN LINE
REMOVE SPENT FUEL ASSEMBLIES WASTE FROM MPC
VACUUM CELLS OF MPC
REMOVE HI-TRAC FROM SPENT FUEL POOL
LOCATION: CASK PREPARATION AREA
LOWER WATER LEVEL IN MPC
PUMP REMAINING WATER IN MPC TO SPENT FUEL POOL
REMOVE MPC FROM HI-TRAC
DECONTAMINATE HI-TRAC

Figure 8.3.1; Unloading Operations Flow Diagram

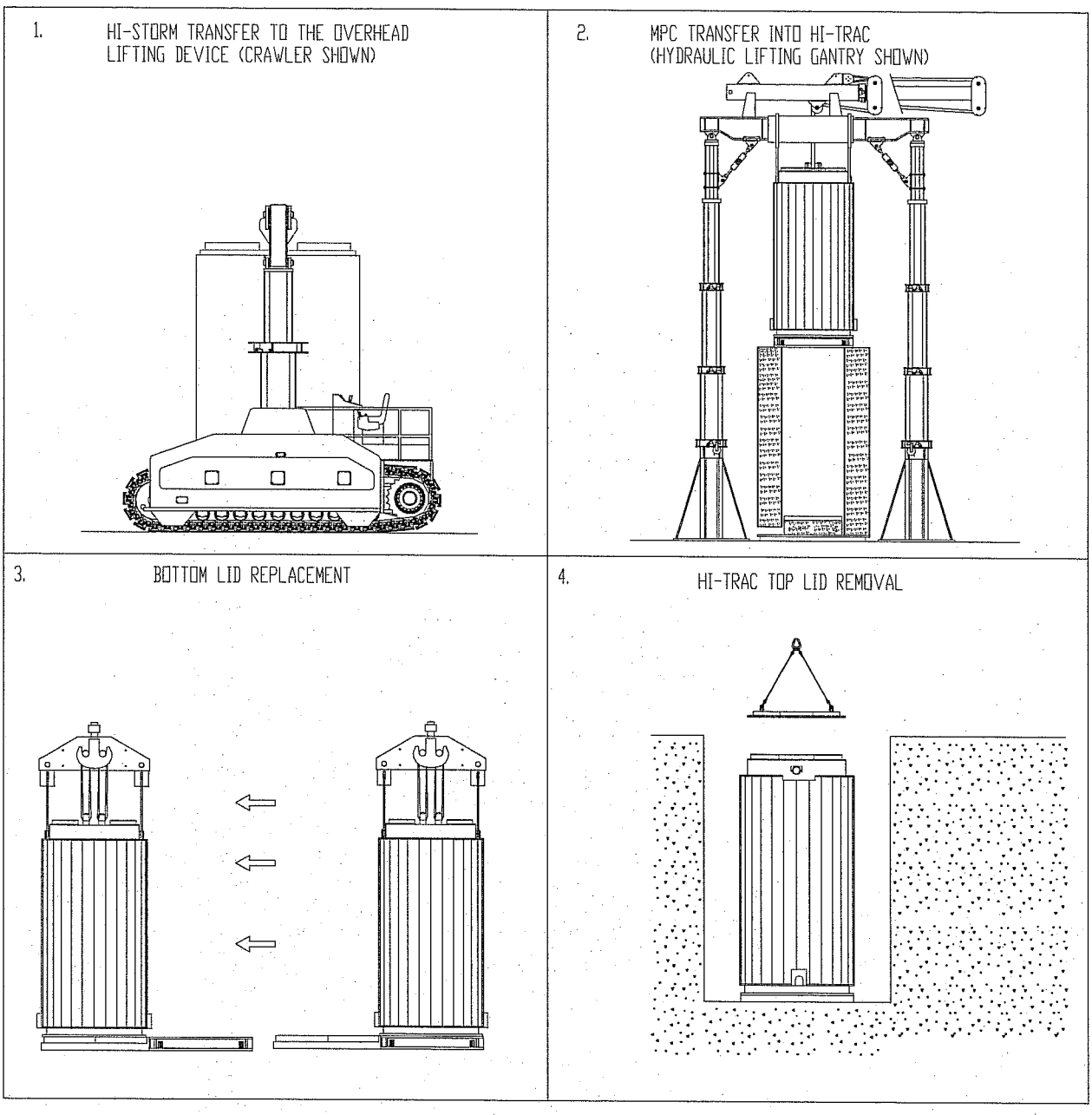

Note: Bottom Lid Replacement Not Required for HI-TRAC 100D and 125D

Figure 8.3.2a; Major HI-STORM 100 Unloading Operations

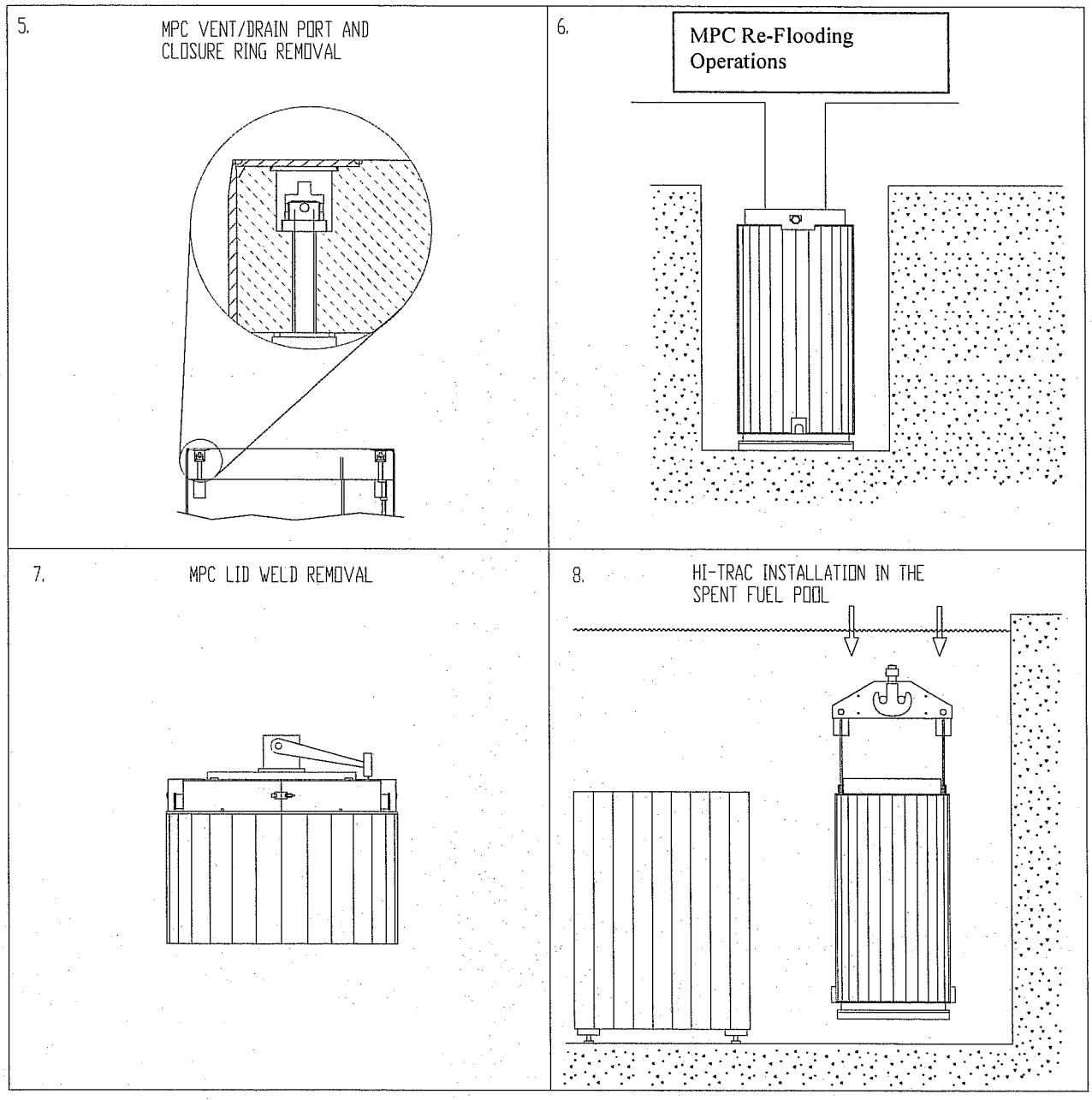

Figure 8.3.2b; Major HI-STORM 100 Unloading Operations

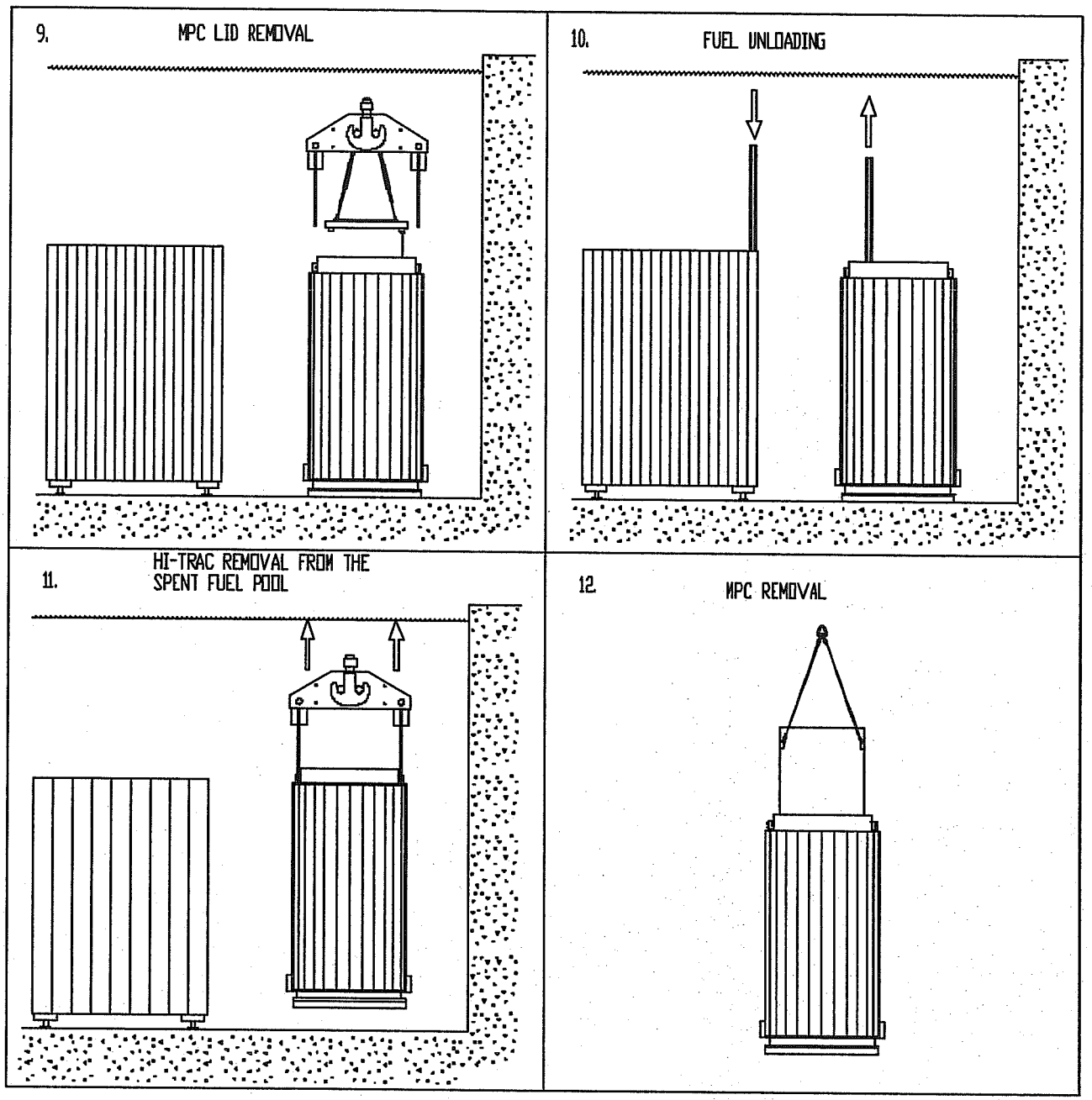

Figure 8.3.2c; Major HI-STORM 100 Unloading Operations

13. MPC AND HI-TRAC DECONTAMINATION

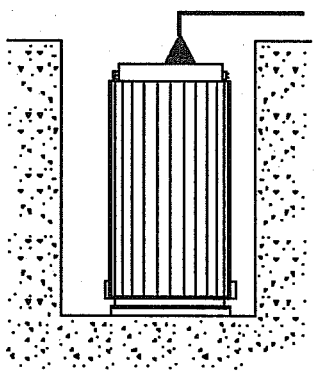

Figure 8.3.2d; Major HI-STORM 100 Unloading Operations

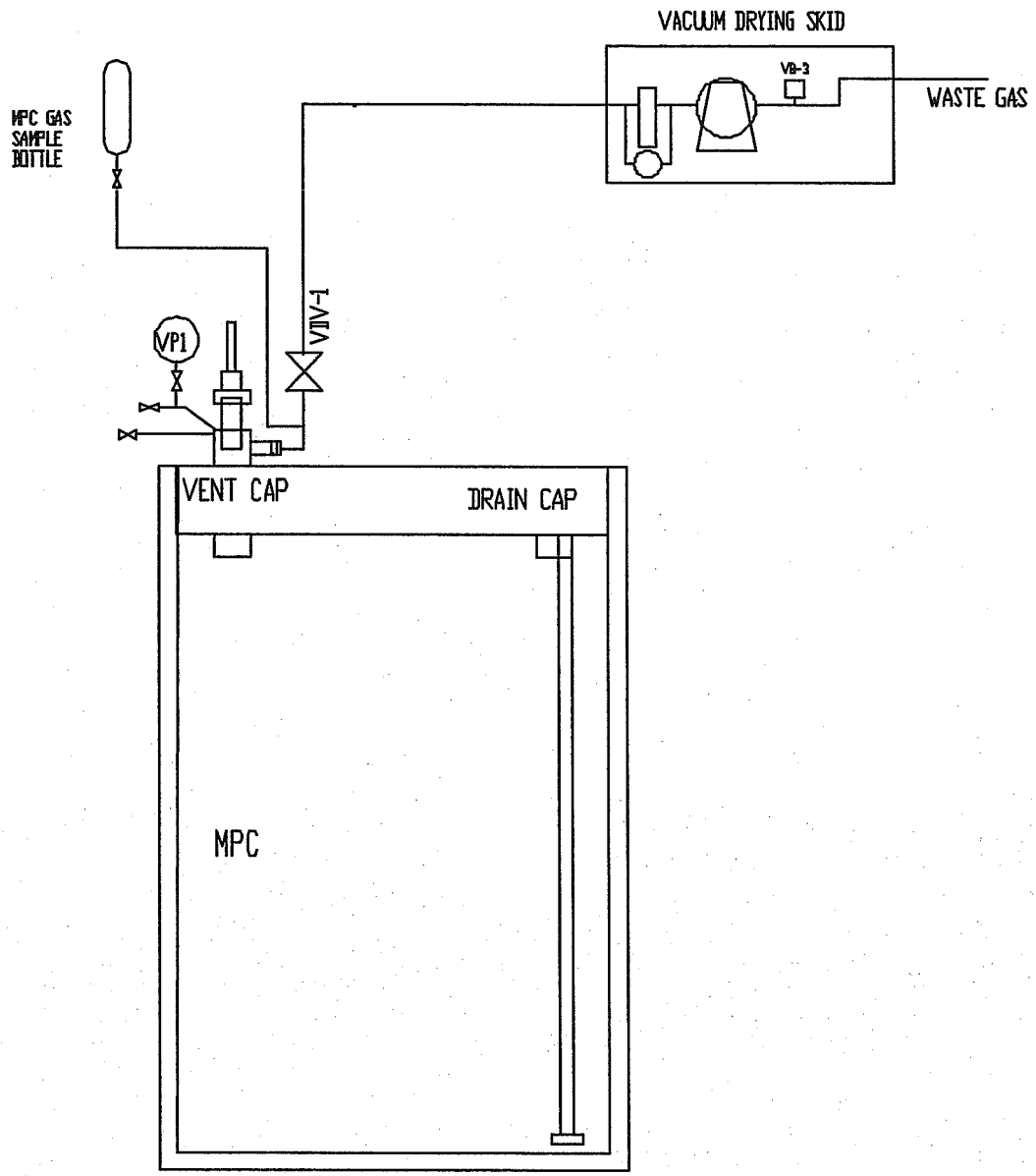

Figure 8.3.3; MPC Gas Sampling in Preparation for Unloading

Figure 8.3.4; Deleted

8.4 MPC TRANSFER TO A HI-STAR 100 OVERPACK FOR TRANSPORT OR STORAGE

8.4.1 Overview of Operations

The MPC is recovered from storage and transferred into HI-TRAC using the same or similar method as described in Section 8.3. Once the MPC is inside HI-TRAC, the HI-STAR 100 is brought to the transfer location and positioned for receiving of the MPC. If used, the Temporary Shield Ring is installed and filled with water and the Transfer Collar is installed on the HI-STAR 100 Overpack. The Temporary Shield Ring reduces operator dose rates during MPC transfer operations. The Transfer Collar or mating device adapts the top surface of the HI-STAR 100 Overpack to mate with the bottom of HI-TRAC. The MPC may be lowered using the MPC Downloader, the main crane hook or similar device. The MPC slings and MPC lift cleats are attached to the MPC. The MPC is raised slightly, the transfer lid door (or mating device drawer) locking pins are removed and the doors are (drawer is) opened. The MPC is lowered into the HI-STAR. Following verification that the MPC is fully lowered, the MPC slings are disconnected and lowered onto the MPC lid. HI-TRAC is removed from on top of the HI-STAR 100 Overpack. The MPC lift cleat, slings, and the transfer collar/mating device are removed. Hole plugs are installed in the empty MPC lid bolt holes. The HI-STAR 100 Overpack is prepared for storage or transport in accordance with the Certificate of Compliance for storage or transport, as applicable.

8.4.2 Recovery from Storage

Caution:
Limitations for the handling an MPC containing high burn-up fuel in a HI-TRAC are evaluated and established on a canister basis to ensure that acceptable cladding temperatures are not exceeded. Refer to FSAR Section 4.5 for guidance.

1. Recover the MPC from storage and position it inside of HI-TRAC in accordance with Section 8.3.2.

2. Deleted.

8.4.3 MPC Transfer into the HI-STAR 100 Overpack

Note:
The following steps outline the HI-STAR 100 operating steps. Refer to the HI-STAR 100 System Final Safety Analysis Report (Docket No. 72-1008) and the HI-STAR 100 System Safety Analysis Report (Docket No. 71-9261) for HI-STAR 100 Overpack specific operations.

HOLTEC INTERNATIONAL COPYRIGHTED MATERIAL

1. If necessary, remove the HI-STAR 100 closure plate and the removable shear ring segments. Perform a radiological survey of the inside of the HI-STAR 100 Overpack to verify there is no residual contamination from previous uses. If contamination levels are above specified limits, the HI-STAR 100 Overpack shall be decontaminated appropriately prior to use.
2. Discard any used metallic seals.
3. Perform a HI-STAR 100 receipt inspection in accordance with site-specific procedures.
4. Install the temporary shield ring on HI-STAR 100 and fill it with water, if used. See Figure 8.1.18.
5. Install the HI-STAR transfer collar (or mating device with the pool lid for HI-TRAC 100D and 125D). See Figure 8.4.1a (or Figure 8.4.1b).
6. Position HI-STAR adjacent to HI-TRAC.

Note:
Lifting of the loaded HI-TRAC shall be performed in accordance with the applicable lifting requirements.

7. Raise and align HI-TRAC over HI-STAR and mate the overpacks.

Note:
The MPC lift cleats and MPC slings are still installed from the previous operation.

8. Deleted.
9. Remove the transfer lid door (mating device drawer) locking pins and open the doors (drawer).

ALARA Warning:
If trim plates are not used, personnel should remain clear of the immediate door/drawer area during MPC downloading since there may be radiation streaming during MPC raising and lowering operations.

10. At the user's discretion, install trim plates to cover the gap above and below the door/drawer. The trim plates may be secured using hand clamps or any other method deemed suitable by the user. See Figure 8.1.33.
11. Lower the MPC into HI-STAR.
12. When the MPC is fully seated, disconnect the slings from the MPC lifting device and lower them on to the MPC lid.
13. Remove HI-TRAC from on top of HI-STAR 100 Overpack.
14. Remove the MPC lift cleat from the MPC and install hole plugs in the empty bolt holes. See Table 8.1.5 for torque requirements.
15. Remove the HI-STAR 100 transfer collar or mating device.

HOLTEC INTERNATIONAL COPYRIGHTED MATERIAL

16. Drain and remove the temporary shield ring (if used) and store it in an approved plant storage location.

17. Complete HI-STAR preparation for transport in accordance with the HI-STAR 100 Safety Analysis Report (Docket 71-9261) and the Certificate of Compliance, or complete HI-STAR preparation for storage in accordance with the HI-STAR 100 Final Safety Analysis Report (Docket 72-1008) and the Certificate of Compliance, as applicable.

HOLTEC INTERNATIONAL COPYRIGHTED MATERIAL

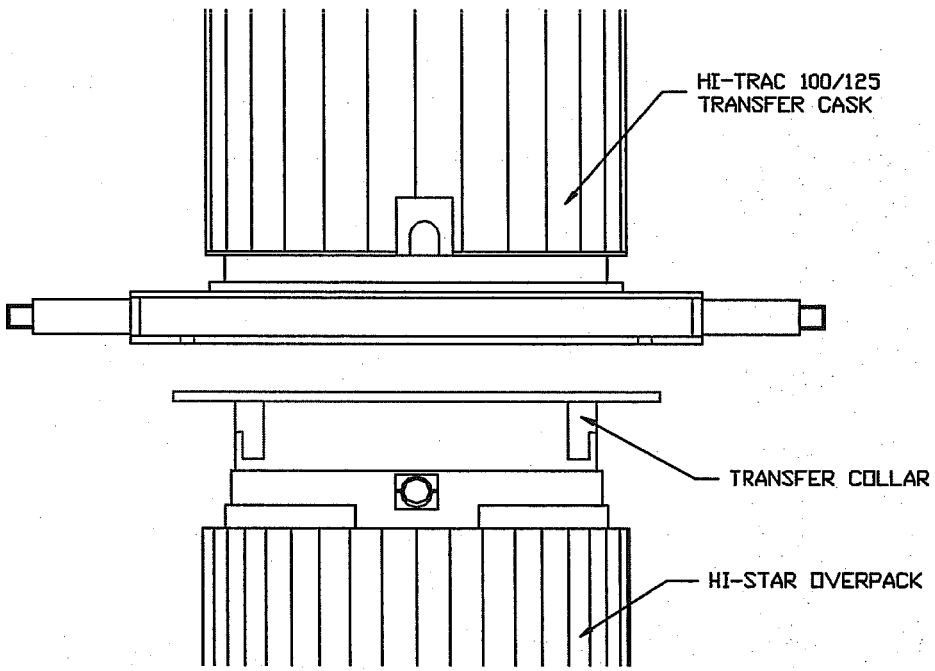

Figure 8.4.1a; HI-STAR and HI-TRAC Mating

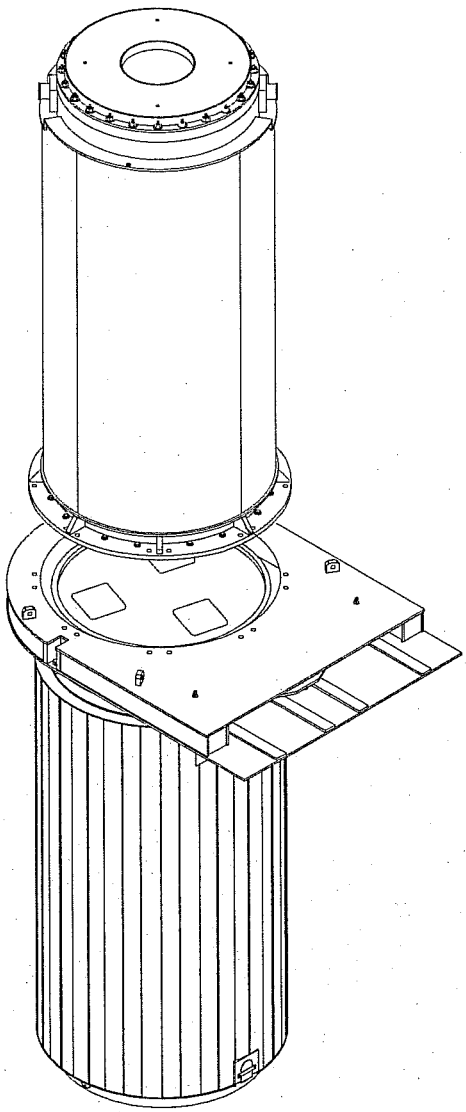

Figure 8.4.1b; HI-STAR and HI-TRAC 100D/125D Mating

8.5 MPC TRANSFER INTO THE HI-STORM 100 OVERPACK DIRECTLY FROM TRANSPORT

8.5.1 Overview of Operations

HI-STAR 100 Dual-Purpose Cask System arrives at the receiving location and is surveyed for dose rates and contamination levels. The receiver reviews the shipping paperwork to ensure that the HI-STAR 100 Overpack met the internal contamination limits prior to transportation. The personnel barrier is removed, the impact limiters are removed, the tie-down is removed, and the HI-STAR 100 Overpack is upended. The HI-STAR 100 Overpack is positioned at the designated transfer area and the temporary shield ring is installed. The temporary shield ring reduces operator dose rates during MPC transfer operations. A gas sample is drawn from the annulus and analyzed. The gas sample provides an indication of MPC closure performance. The annulus is depressurized and the closure plate is removed. The transfer collar (mating device with pool lid for HI-TRAC 100 D and 125D) is installed and the MPC lift cleats are attached to the MPC. The transfer collar (mating device) is used to provide the mating surface on top of the HI-STAR 100 Overpack. The MPC slings are attached to the MPC lift cleat.

If the HI-TRAC 100D and 125D are not used, the HI-TRAC is configured with the transfer lid. The top lid[1] is installed, if necessary. HI-TRAC is raised and positioned on top of HI-STAR. The MPC slings are attached to the lifting device. The MPC is raised into HI-TRAC. The HI-TRAC doors/(mating device drawer) are closed and the locking pins are installed. For the HI-TRAC 100D and 125D, the pool lid is bolted on. HI-TRAC is raised and the HI-STAR 100 Overpack is removed from under HI-TRAC. The HI-STAR 100 Overpack is repositioned at the user's discretion.

HI-STORM is positioned for MPC receipt with the lid removed, the *alignment device (or mating device) positioned*, and the vent duct shield inserts installed in the exit vent ducts. HI-TRAC is raised and positioned on top of HI-STORM. For HI-TRAC 100D and 125D, the pool lid is unbolted. The locking pins are removed and the doors are opened (or mating device drawer opened for HI-TRAC 100D and 125D). The MPC is lowered into HI-STORM . The MPC slings are disconnected and lowered onto the MPC lid. HI-TRAC is raised and positioned at the site's discretion. The MPC lift cleat, slings, vent duct shield inserts, and transfer collar (or mating device) are removed and hole plugs are installed in the empty bolt holes. HI-STORM is prepared for storage and transferred to the ISFSI pad in the same manner as described in Section 8.1.

[1] Users with the optional HI-TRAC Lid Spacer shall modify steps in their procedures to install and remove the spacer together with top lid.

HOLTEC INTERNATIONAL COPYRIGHTED MATERIAL

8.5.2 HI-STAR 100 SYSTEM Receipt and Preparation for MPC Transfer

Note:
The following provides a general description of the HI-STAR 100 System operations. Refer to the HI-STAR 100 System Topical Safety Analysis Report (Docket 72-1008) and the Safety Analysis Report (Docket 71-9261) for HI-STAR-specific operations.

1. Review the shipping paperwork and verify that the HI-STAR 100 Overpack met the required internal contamination limits prior to transportation.

2. Measure the HI-STAR 100 dose rates in accordance with 10CFR20.205 [8.5.1].

3. Remove the personnel barrier.

4. Perform removable contamination surveys in accordance with 10CFR20.205 [8.5.1].

5. Remove the impact limiters.

6. Remove the tie-down.

7. Perform a visual inspection of the overpack for obvious signs of shipping damage.

8. Remove the removable shear ring segments from the overpack. (Approximate weight is 50 lbs each).

9. Transfer the HI-STAR 100 Overpack to the location for MPC transfer and position it vertically.

10. Install the temporary shield ring on the overpack top flange if used.

ALARA Warning:
Gas sampling is performed to assess the condition of the MPC confinement boundary. If a leak is discovered in the MPC boundary, the MPC may not be placed into HI-STORM. If no leak is detected, the annulus may be vented directly.

11. Perform gas sampling as follows:

    a. Remove the overpack vent port cover plate and attach the backfill tool with a sample bottle attached. See Figure 8.5.1. Store the cover plate in a site-approved location.

    b. Using a vacuum pump, evacuate the sample bottle and backfill tool.

HOLTEC INTERNATIONAL COPYRIGHTED MATERIAL

c. Slowly open the vent port plug and gather a gas sample from the annulus. Reinstall the overpack vent port plug.

d. Evaluate the gas sample and determine the condition of the MPC confinement boundary.

12. If the confinement boundary is intact (i.e., no radioactive gas is measured) then vent the overpack annulus by removing the overpack vent port seal plug (using the backfill tool). Otherwise return the HI-STAR 100 to the spent fuel pool for MPC unloading in accordance with the HI-STAR 100 SAR.

13. Remove the closure plate bolts and remove the overpack closure plate. Store the closure plate on cribbing to protect the seal seating surfaces. Store the closure plate bolts in a site-approved location.

14. Install the HI-STAR 100 Seal Surface Protector.

15. Install the transfer collar (or mating device with pool lid for HI-TRAC 100D and 125D) on HI-STAR. See Figure 8.4.1.

Note:
The location of MPC transfer may be selected at the user's discretion.

16. Remove the MPC lift cleat hole plugs and install the MPC lift cleats. See Figure 8.1.24. See Table 8.1.5 for torque requirements.

17. Attach the MPC slings to the MPC lift cleat and lay them on the MPC lid.

Warning:
Unless the lift is single-failure proof (or equivalent safety factor) the HI-TRAC top lid, the lid shall be kept less than 2 feet above the top surface of the MPC. This is performed to protect the MPC lid from a potential lid drop.

18. If necessary, install the HI-TRAC top lid. See Figure 8.1.9. See Table 8.1.5 for torque requirements.

19. If necessary, configure HI-TRAC with the transfer lid as follows (Not applicable for HI-TRAC 100D and 125D):

ALARA Note:
The bottom lid replacement as described below may be performed only on an empty HI-TRAC.

a. Position HI-TRAC vertically adjacent to the transfer lid.

HOLTEC INTERNATIONAL COPYRIGHTED MATERIAL

b. Remove the pool lid bolts and plates and store them in an approved plant storage location.

c. Raise the empty HI-TRAC and position it on top of the transfer lid.

d. Install the bottom lid bolts. See Table 8.1.5 for torque requirements.

20. Position HI-TRAC adjacent to HI-STAR.

21. Raise HI-TRAC above HI-STAR.

22. Align HI-TRAC over HI-STAR 100 and mate the overpacks. See Figure 8.1.31.

23. Remove the locking pins and open the doors or mating device drawer.

ALARA Warning:
If trim plates are not being used, personnel should remain clear of the door/drawer area during MPC downloading since there may be some radiation streaming during MPC raising and lowering operations.

24. At the users discretion, install trim plates to cover the gap above and below the door/drawer. The trim plates may be secured using clamps or any other method deemed suitable by the user. See Figure 8.1.33.

8.5.3 Perform MPC Transfer into HI-STORM 100

Caution:
Limitations for the handling an MPC containing high burn-up fuel in a HI-TRAC are evaluated and established on a canister basis to ensure that acceptable cladding temperatures are not exceeded. Refer to FSAR Section 4.5 for guidance.

1. Raise the MPC into HI-TRAC by extending the MPC downloader.

2. Verify the MPC is in the full-up position.

3. Remove the trim plates (if used).

4. Close the HI-TRAC doors/drawer and install the locking pins.

5. For the HI-TRAC 100D and 125D, raise the pool lid and bolt it onto the HI-TRAC.

6. Raise HI-TRAC and remove the HI-STAR 100 Overpack from the operations area.

HOLTEC INTERNATIONAL COPYRIGHTED MATERIAL

7. Transfer the MPC into HI-STORM in accordance with the steps provided in Section 8.1.

8. Place HI-STORM in storage in accordance with the steps provided in Section 8.1.

9. Perform shielding effectiveness testing.

10. Perform an air temperature rise test per Step 8.1.7.23 if required.

HOLTEC INTERNATIONAL COPYRIGHTED MATERIAL

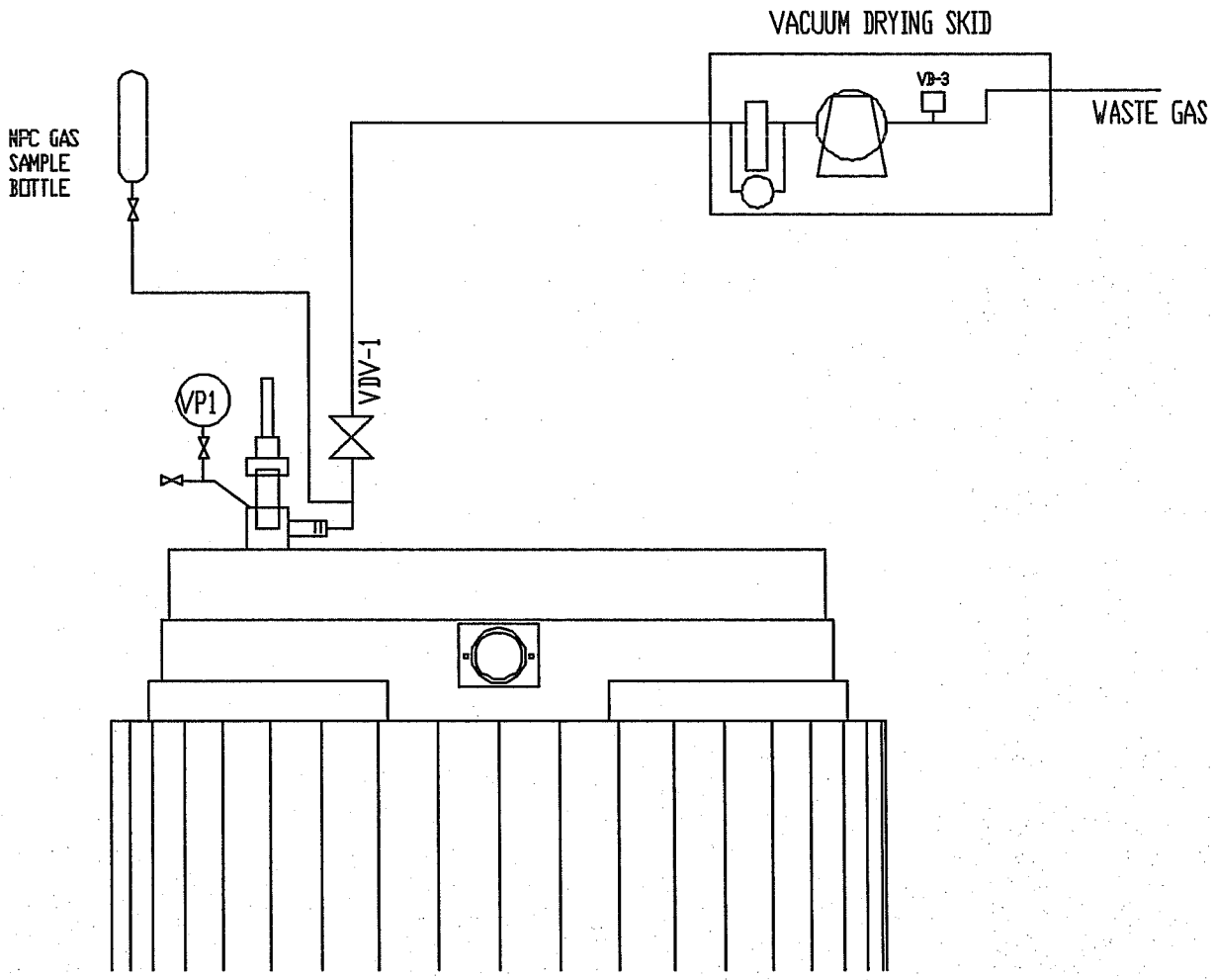

Figure 8.5.1; HI-STAR Annulus Gas Sampling

8.6 REFERENCES

[8.0.1] U.S. Nuclear Regulatory Commission, "Standard Review Plan for Dry Cask Storage Systems", NUREG-1536, Final Report, January 1997.

[8.1.1] U.S. Code of Federal Regulations, Title 10 "Energy", Part 72, "Licensing Requirements for Independent Storage of Spent Nuclear Fuel and High-Level Radioactive Waste,"

[8.1.2] American National Standards Institute, Institute for Nuclear Materials Management, "American National Standard for Radioactive Materials – Leakage Tests on Packages for Shipment," ANSI N14.5-1997.

[8.1.3] American Society of Mechanical Engineers "Boiler and Pressure Vessel Code".

[8.5.1] U.S. Code of Federal Regulations, Title 10 " Energy", Part 20, "Standards for Protection Against Radiation,"

HOLTEC INTERNATIONAL COPYRIGHTED MATERIAL

SUPPLEMENT 8.I

(This Section Reserved for Future Use)

HOLTEC INTERNATIONAL COPYRIGHTED MATERIAL

SUPPLEMENT 8.II

OPERATING PROCEDURES

The main body of this chapter remains fully applicable for the IP1 specific options of the HI-STORM 100 System.