# McGuire Nuclear Station

## ASME Wall Tap Flow Nozzles for MUR Uprate

*McGuire Nuclear Station*
*Huntersville, North Carolina*

# McGuire Nuclear Station

Topics

- Purpose
- Background – why pursue this direction
- Description of ASME Nozzles at McGuire
- Commissioning the ASME Nozzles
- Nozzle Fouling
- DP Flow Measurement Uncertainty
- Operational Advantage of DP Flow Measurement
- Key Elements of DP Flow Measurement
- Moving Forward with DP Flow and MUR Uprate
- Questions, Comments and Open Discussion

# Purpose

- This meeting is a first step to explore the viability of use of ASME Nozzles for a MUR uprate at McGuire Nuclear Station.
- If this concept is favorably received, Duke Power would be interested in pursuing use of ASME Nozzles at Oconee and Catawba

# Background

- Differential pressure based flow measurement has not been reviewed by the NRC for use as the primary flow meter in a MUR uprate
  - South Texas (STP) included use of venturi based flow measurement when their Crossflow is out of service
  - STP thermal power measurement uncertainty with venturi is ~1%
  - EDF uses high Beta ratio orifices in test sections to calibrate venturis used for normal operation

# ASME Nozzles at McGuire

- ASME nozzle flow metering sections were installed in Unit 1 (Winter 1996) and Unit 2 (Spring 1996) to provide feedwater flow inputs to thermal power calculation
  - Venturis had experienced upstream tap erosion
  - MWe decreases indicated that flow measurement could be in error
- Duke Power considers these flow meters to be suitable for implementation of a MUR uprate

# ASME Nozzles at McGuire

- Flow meter section design and construction is per ASME requirements
  - ASME MFC-3M-1989
  - ASME Fluid Meters, Sixth Edition
- Refer to drawing handout

# ASME Nozzles at McGuire

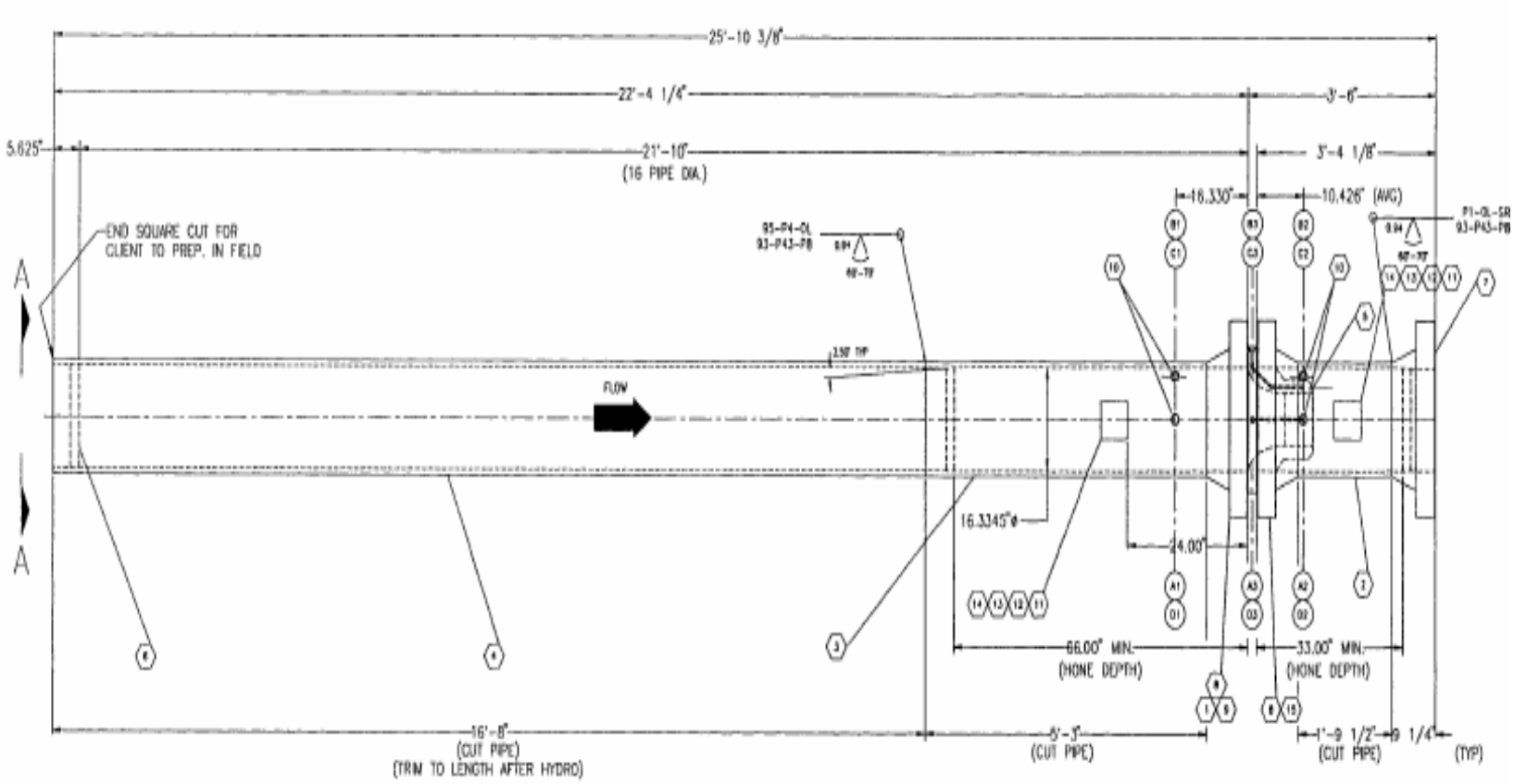

# ASME Nozzles at McGuire

- Positive control of swirl and hydraulics entering the flow measurement section
  - A Mitsubishi Plate Type flow straightener
    - Eliminates swirl
    - Allows restoration of fully developed flow profile in a relatively short length of pipe

# ASME Nozzles at McGuire

- Positive control of swirl and hydraulics entering the flow measurement section
  - The ID upstream and downstream of the nozzle element is honed
    - Superior surface finish
    - Superior circularity of the piping
    - Superior axial alignment of the upstream/downstream piping with the nozzle axis

# ASME Nozzles at McGuire

- Low beta ratio (~0.5) ASME nozzle elements that include both wall taps and throat taps for the low pressure measurement
- Four sets of wall taps and four sets of throat taps in each flow section
- The uncertainty of the wall tap and throat tap discharge coefficients is stated to be less than 0.1% at 95% confidence by Alden Research Laboratory in the calibration report

# ASME Nozzles at McGuire

- Corrosion resistant materials of construction throughout the flow sections
  - Ensure stability of the beta ratio and geometry of tap edges over operating life
  - Austenitic stainless steel
    - Nozzle element and piping upstream and downstream
  - Other parts are corrosion resistant Chrome-Moly, P11, material

# ASME Nozzles at McGuire

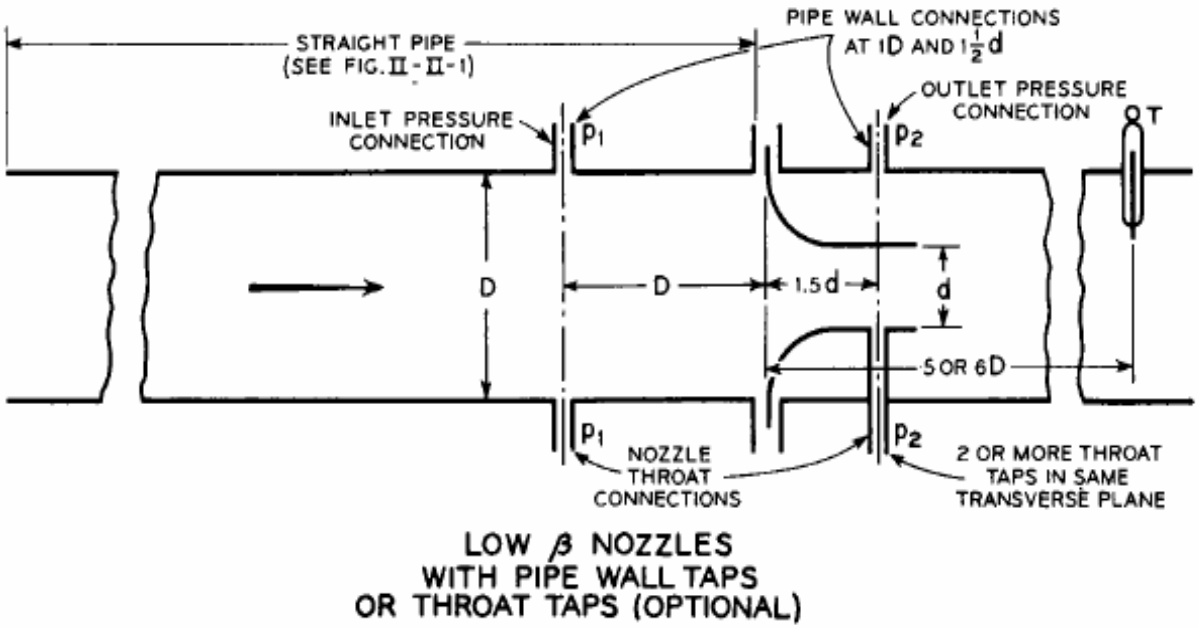


FIG. II-III-15 LOCATIONS OF PRESSURE TAPS USED WITH ASME LONG-RADIUS FLOW NOZZLES WHEN IN A CONTINUOUS PIPELINE (WHEN A THERMOMETER IS REQUIRED, THE WELL FOR IT MAY BE LOCATED AS SHOWN BY *T*.)

*Figure excerpted from ASME Fluid Meters Their Theory and Application, 6th Ed. Howard S. Bean editor, ASME ©1971*

# ASME Nozzles at McGuire

- The flow measurement for input to the thermal power calculation is derived from the wall taps
- Each wall tap and throat set share a common upstream pressure tap
- The throat taps are not instrumented at this time

# ASME Nozzles at McGuire

Wall taps were selected for flow measurement to avoid deleterious effects experienced by throat taps when fouling accumulation causes boundary layer changes that affect the pressure sensed by the throat tap

# ASME Nozzles at McGuire

- Wall taps are considered to be insensitive to fouling effects
  - EPRI Report TR-101388, November 1992
    - Two utilities reported use of wall tap nozzles without “venturi fouling" effects
  - Low pressure wall tap is upstream of the nozzle discharge plane
    - Chaotic eddy region where classic boundary layer flow should not exist

# *ASME Nozzle Commissioning*

- For both McGuire units, placing the flow nozzles in service involved precision flow measurement during plant startup
- Flow was measured using wall taps and throat taps

# ASME Nozzle Commissioning

- Flow measured by the wall taps was compared to that of the throat taps during power escalation
  - Provide empirical confirmation that the extrapolation of the wall tap discharge coefficient to full power conditions was correct
    - Greater emphasis in technical writings on the superior accuracy of ASME throat tap
  - Wall tap measurement was shown to be within ~0.1% of the throat tap measurement

# *Fouling of Nozzles*

- After one cycle of operation, one flow element was removed for visual inspection which revealed accumulation of a thin layer of fouling on the nozzle element
- Monitoring for the first few cycles following installation showed no tendency of the wall taps to be affected by fouling

# DP Flow Measurement Uncertainty

- ASME, ANSI, ISO standards define:
  - Flow calculation methods using differential pressure producers
  - Method for determining uncertainty
- No proprietary information associated with:
  - Meter design
  - Flow calculation
  - Calibration process
  - Commissioning requirements

# DP Flow Measurement Uncertainty

- Flow measurement inputs:
  - Discharge coefficient
  - Differential pressure
  - Temperature of the flowing fluid
    - Pressure also needed but small influence
  - Beta ratio at cold conditions (pipe and nozzle diameters)

# DP Flow Measurement Uncertainty

- Discharge coefficient
  - The uncertainty of the discharge coefficient is derivable from laboratory calibration data and can be confirmed by comparison of wall tap to throat tap flows during commissioning testing
  - Industry standards define requirements for acceptable calibration results and extrapolation methods

# DP Flow Measurement Uncertainty

- Temperature and Differential Pressure
  - Currently available technology provides very low measurement uncertainties
  - Temperature sensor plus string accuracy ~0.8 ºF
  - Differential pressure sensor plus string accuracy ~3.1 inches water (0.31% URL)
  - Instrument strings are assumed to be digital

# DP Flow Measurement Uncertainty

- Beta ratio at cold conditions (pipe and nozzle diameters)
  - Measured by manufacturer
  - Manufacturer's QA program required to meet ANSI and purchaser's requirements with traceability to NIST
  - Fluid temperature measurement and thermal expansion curves impact influence of Beta ratio at operating conditions

# DP Flow Measurement Uncertainty

- Use of redundant sensors and use of digital signal transmission from the sensors to the plant computer provides a large improvement in total uncertainty
- Redundancy in sensors also improves thermal power measurement uncertainty

# DP Flow Measurement Uncertainty

- 2001 uprating study for Oconee showed total thermal power measurement uncertainty can be reduced to as low as 0.25% using flow nozzles
  - FDW Flow ~0.22%
  - FDW Enthalpy ~0.05%
  - Steam Enthalpy ~0.06%

# Operational Advantage of DP Flow Measurement

- DP based flow
  - Based on mature processes and techniques for measurement
  - From operational perspective, DP based flow is more robust than ultrasonic options
    - Rapid response
    - Flow profile is controlled for control of hydraulics in the measurement section
  - No impact on Operations Staff

# *Key Elements of DP Based Flow for MUR Uprate*

- Careful design and construction of differential pressure producer in accordance with standards
- Elimination of error associated with signal transmission hardware

# Key Elements of DP Based Flow for MUR Uprate

- Calibration and commissioning testing
  - The independence of the wall taps and throat taps permits the throat tap measurement to be viewed as an in-situ calibration of the wall tap measurement
- Careful design of thermal power calculation to include redundancy in all inputs
  - Independence of inputs used by thermal power calculation and control system

# *Moving Forward with DP Flow and MUR Uprate*

- Independent consultant to review McGuire nozzle design
- Development of requirements for submittal of DP based flow for MUR uprate
- Definition of additional actions to support McGuire MUR uprate submittal

# *Moving Forward with DP Flow and MUR Uprate*

- Independent Consultant
  - Richard W. Miller, Ph. D
    - Served on US and international standards committees
    - Holds several patents on flow measurement devices
    - Authored several publications including *Flow Measurement Engineering Handbook*
    - Recognized expert on flow measurement
  - Dr. Miller's initial impression of our objectives is positive and viewed as probably doable

# *Moving Forward with DP Flow and MUR Uprate*

Objective of Dr. Miller's review will be to:

- Evaluate the nozzle calibrations
- Perform a literature review of fouling effects
- Identify mitigating strategies for fouling effects or other bias errors induced by operation
- Review and assist in development of uncertainty calculation for MUR uprate
- Develop/expand technical justification for use of ASME Wall Tap Nozzle for MUR uprate

# *Moving Forward with DP Flow and MUR Uprate*

Evaluation of actions in addition to Dr. Miller's review to support the McGuire MUR uprate submittal

- Define necessary modifications and PMs to demonstrate health and condition of nozzles in support of MUR submittal
- Define special testing or data collection needs

# NRC Expectations for Proving DP Based Flow for MUR

- How does Duke Power proceed in working with the NRC to develop justification for DP based flow with MUR uprate?
  - RIS provides guidance for use of UFMs and MUR
  - UFM vendors have provided Topical Reports to facilitate the MUR uprate review process

# NRC Expectations for Proving DP Based Flow for MUR

- What are NRC expectations for this process and for this flow measurement option?
  - Technical content of submittal
  - Schedule for review
  - Other concerns with respect to DP based flow measurement?

# Questions and Comments