DRAWING NUMBER LR-18014-C
SHEET NUMBER 6

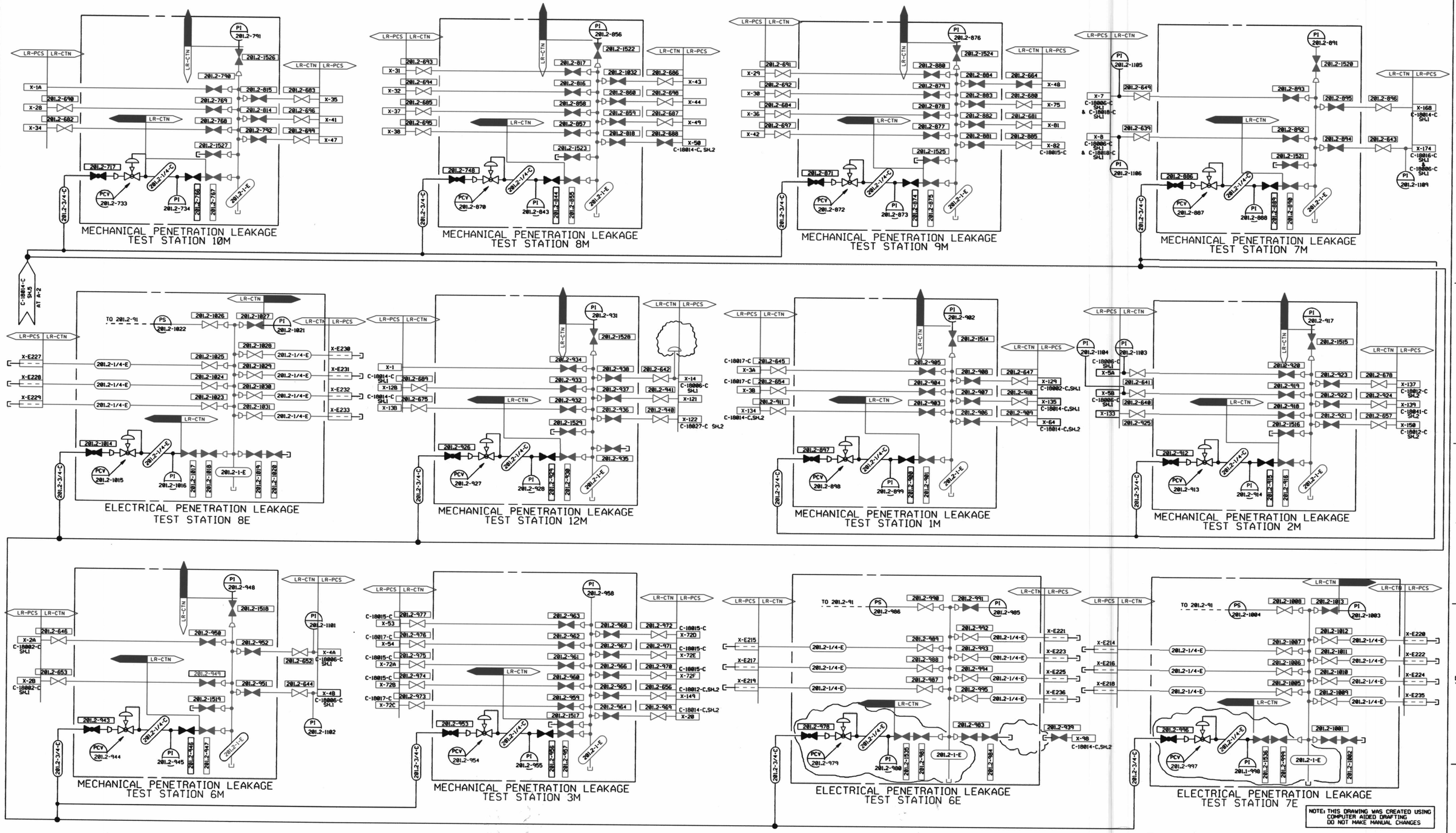

LR NOTE:
PLEASE REFER TO DRAWING LR-18000-C SHEET 1 AND 2 FOR LR BOUNDARY DRAWING NOTES, SYMBOLS, AND ACRONYMS.

NOTE: THIS DRAWING WAS CREATED USING COMPUTER AIDED DRAFTING DO NOT MAKE MANUAL CHANGES

REV	DATE	BY	REMARKS	CK	APP	HF
0						

CONSTELLATION ENERGY GROUP

STA: NINE MILE POINT NUCLEAR STATION UNIT NO. 1

ACC NO:

APP / APP / APP / DATE / DES / DR / DR CK / HF

REACTOR CONTAINMENT DRYWELL AND TORUS MECHANICAL AND ELECTRICAL PENETRATION LEAKAGE TEST STATIONS

P AND I DIAGRAM

SCALE	DWG NO	INDEX	SH	REV
NONE	LR-18014-C	3-N2-S10	6	0

...\LR-18014-C_006.dgn 5/16/2004 11:12:47 AM

D034