Table (II)-C.7 Leak of Radioactive Solids under Normal Test Conditions (Contents VIII)

Nuclide	Content (%)	Xa Leak (g/h)	Pa Specific radioactivity (Bq/g)	Aa Leakage radioactivity (Bq/h)	Ba Criteria (Bq/h)	Ratio relative to criteria Aa/Ba
Pu^{238}	0.2	3.20×10^{-13}	6.29×10^{11}	2.01×10^{-1}	2.00×10^{2}	1.01×10^{-3}
Pu^{239}	80.0	1.28×10^{-10}	2.29×10^{9}	2.94×10^{-1}	2.00×10^{2}	1.47×10^{-3}
Pu^{240}	25.0	4.00×10^{-11}	8.51×10^{9}	3.41×10^{-1}	2.00×10^{2}	1.71×10^{-3}
Pu^{241}	10.0	1.60×10^{-11}	4.07×10^{12}	6.51×10^{1}	1.00×10^{4}	6.53×10^{-3}
Pu^{242}	5.0	8.00×10^{-12}	1.44×10^{8}	1.15×10^{-3}	2.00×10^{2}	5.79×10^{-6}
Am^{241}	1.5	2.40×10^{-12}	1.18×10^{11}	2.84×10^{-1}	2.00×10^{2}	1.42×10^{-3}

Total: 0.012

where $Xa = X \cdot xa$
$Aa = xa \cdot Pa$
$(X = 1.61 \times 10^{-10}\ g/h)$

C.3.2 Pressurization of Containment Systems

The package uses a dry-type containment system. The interiors of both fuel supporting cans I and II are filled with helium gas (at a pressure of approximately 100 kPa). Since all other gaseous filling is air, no liquid evaporation or gas formation resulting from radiolysis takes place.

Fission product gases account for the other gases. In the case of Contents I, these fission product gases are confined within the cladding of individual fuel pins if these pins are structurally sound, or within the interior of each individual fuel supporting can I holding segmented fuel pins. Even if and when these fission product gases leak into the interior of the containment systems, their amounts are so small that the extent of the pressure buildup they cause will be limited. In addition, H^3, which is chemically very active, is counted among the fission product gases. Since this gas is present only in a limited amount, it poses no hazard of explosion or combustion.

Regarding the buildup of pressure inside the containment system, a pressure increase due to the expansion of these gases caused by a temperature rise is conceivable. However, since the pertinent design criteria are satisfied as discussed in section B.4 of Chapter II, the containment system's containment is maintained.

C.3.3 Contamination of Coolant

Although no liquid coolant is used in the package, the helium gas which is charged into the interior of fuel supporting cans that hold Contents I acts as a coolant. Contamination of the helium gas by fission product gases is, therefore, conceivable. The calculations of radioactive material leak carried out earlier were based on the assumption that helium gas laced with fission product gases had leaked into the interior of the containment system. In this case, the leak of radioactive material was found to be acceptable given the criteria outlined in C.3.1.

C.3.4 Loss of Cooling Water

Since no special coolant is used, this item does not apply to the package.

C.4 Accident Test Conditions

The different types of impact that act upon the package under the specified accident test conditions are summarized below:

(1) 9-meter drop

When the package is dropped onto a rigid surface from a height of 9 m (in vertical, horizontal, corner, and oblique drops), it is protected by the shock absorbers mounted at its ends. For this reason, the containment system as well as the fuel supporting cans or receiving tubes, that are categorized as secondary containment systems, remain structurally sound, and their containment is maintained intact. (See A.6.1)

(2) 1-meter drop

When the package is dropped onto a mild steel bar, there is no possibility that the mild steel bar will reach an opening section of the packaging body because of the end-mounted shock absorbers that cover all the opening sections of the packaging. For this reason, the containment system remains unaffected. Moreover, the fuel supporting cans or receiving tubes that are accommodated also remain structurally sound. (See A.6.2.)

(3) Thermal test

In the course of a thermal test, the temperature of the package's containment boundary soars to a maximum of 125°C and the pressure reaches its peak at 180 kPa. Nevertheless, the O-rings (made of fluoro rubber) within this containment system remain sound at this temperature, and the containment system remains sound under this pressure. Since the fuel supporting cans or receiving tubes that are accommodated are made of stainless steel, they can withstand the increased temperature and pressure for the duration of the thermal test and remain structurally sound, thereby their containment is maintained. (See A.6.3.)

(4) Water immersion test

The soundness of the package can be maintained intact even if a water pressure of 248 kPa is applied to it, and the containment system along with the fuel supporting cans or the receiving tubes that are housed in it remain unaffected. (See A.6.4.)

(5) 1-week-long unattended storage

The containment of the container is maintained even though the package is left in an environment exposed to temperatures ranging from 38°C to -40°C for a duration of one week after the completion of the foregoing tests (1) through (4). (See A.6.5.)

The results of the foregoing structural evaluations and thermal analysis indicate that the containment system as well as the fuel supporting cans or the receiving tubes that are housed in it remain sound even when placed under accident test conditions. Moreover, the containment is also maintained intact.

C.4.1 Fission Product Gases

Of the range of Contents under consideration, irradiated fuel pins (falling under the categories of Contents I, II, IV, V, VI, VII, and VIII) are involved with the formation of fission product gases, and their major nuclides are shown in Table (II)-C.8.

Table (II)-C.8 Radioactivity Levels of Fission Product Gases

Primary nuclide	Contents I	Contents II	Contents IV	Contents V	Contents VI	Contents VII	Contents VIII
H^{3}	2.060×10^{11}	6.730×10^{10}	2.010×10^{11}	9.290×10^{9}	2.050×10^{11}	2.170×10^{10}	3.500×10^{11}
Kr^{85}	1.680×10^{12}	5.440×10^{11}	1.670×10^{12}	1.050×10^{11}	2.790×10^{12}	1.970×10^{11}	6.340×10^{12}
I^{129}	7.660×10^{6}	2.450×10^{6}	7.470×10^{6}	4.030×10^{7}	1.080×10^{7}	3.290×10^{6}	2.100×10^{7}
I^{131}	1.280×10^{8}	2.520×10^{7}	1.280×10^{8}	7.990×10^{10}	1.180×10^{8}	-	1.590×10^{1}
Xe^{131m}	4.400×10^{8}	8.660×10^{7}	4.400×10^{8}	2.090×10^{10}	4.070×10^{8}	-	7.330×10^{3}
Total	1.887×10^{12}	6.114×10^{11}	1.872×10^{12}	2.151×10^{11}	2.996×10^{12}	2.187×10^{11}	6.690×10^{12}

(Unit: Bq)

C.4.2 Leak of Radioactive Materials

As mentioned above, the containment system as well as the fuel supporting cans or the receiving tubes that are housed in it maintain their containment under accident test conditions. Under accident test conditions, studies were conducted based on the same concepts as those underlying the radioactive-material leakage analysis, which was performed under the normal test conditions in Section C.3.1. In other words, fuel supporting cans or receiving tubes were not counted among containment systems from the viewpoint of analysis. The results indicated that the containment system retains its initial containment, and its leakage rate equals 1.0×10^{-5} atm • cc/sec.

To begin with, radioactive gases were studied as follows.

The leakage rate when the containment system's internal pressure and temperature equaled 180 kPa and 228°C, respectively, under accident test conditions, is given by the following equation:

$$Lr = (Fc+Fm)\ (Pu-Pd)$$

$$Fc = 2.49 \times 10^{-2} \times d_N^4 \frac{1}{(a \cdot \mu)}$$

$$Fm = 3.81 \times 10^{3} \times d_N^3 \sqrt{\frac{T}{M}} \frac{1}{(a \cdot Pa)}$$

where

Pu	:	Upstream pressure	0.101	(MPa)
Pd	:	Downstream pressure	0.0	(MPa)
a	:	Length of the leak hole	0.5	(cm)
μ	:	Viscosity of helium	1.981×10^{-11}	(MPa • s)
T	:	Gas temperature	293	(K)
M	:	Molecular weight	4	
Pa	:	Average pressure	(Pu+Pd)/2.0	
Lr	:	Leakage rate	1.0×10^{-5}	(atm • cc/sec)

By substituting these values in the above equation, the diameter of the leak hole is calculated as:

$$d_N = 3.5586 \times 10^{-4}\ (cm)$$

Based on this diameter (d_N), the leakage rate of the medium (air) under normal test conditions is obtained:

where

Pu	:	Upstream pressure	0.18	(MPa)
Pd	:	Downstream pressure	0.025	(MPa)
a	:	Length of the leak hole	0.5	(cm)
μ	:	Viscosity of air	2.69×10^{-11}	(MPa • s)

T	:	Air temperature	501
M	:	Molecular weight	29
Pa	:	Average pressure	(Pu+Pd)/2.0

The leakage rate (Lr) is expressed as L = 6.755×10^{-6} (atm·cc/sec) = 4.085 (atm·cc-/week).

Contents V, in which the fission product gases show the highest radioactivity, are used here as an example. The amount of radioactive gases generated by the various nuclides and the amount which escapes each week are obtained by multiplying the radioactive gas concentrations by the containment system's leakage rate obtained above. The obtained leakage amounts are then compared with the criteria and the results are given in Table (II)-C.9.

Table (II)-C.9 Leak of Radioactive Gases under Accident Test Conditions (Contents VIII)

Nuclide	Amount in storage (Bq)	Concentration (Bq/cm^3)	Leakage radio-activity (Bq/week)	Criteria (Bq/week)	Ratio relative to criteria
H^3	3.50×10^{11}	1.19×10^{7}	4.87×10^{7}	4.00×10^{13}	1.21×10^{-6}
Kr^{85}	6.34×10^{12}	2.15×10^{8}	8.78×10^{8}	1.00×10^{14}	8.78×10^{-5}
I^{129}	2.10×10^{7}	7.12×10^{2}	2.91×10^{3}	Not specified	0
I^{131}	1.59×10^{1}	5.39×10^{-4}	2.20×10^{-3}	5.00×10^{11}	4.40×10^{-15}
Xe^{131m}	7.33×10^{3}	2.49×10^{-1}	1.02	4.00×10^{13}	2.54×10^{-14}

Total: 8.90×10^{-5}

The next paragraph discusses radioactive solids. The amount of radioactive solid materials which leak out of the containment system each hour equals 1.61×10^{-10} g (cf. C.3.1). Therefore, the weekly leakage amount [X'] comes to 2.71×10^{-8} g. Leakage rates, etc. that have been calculated based on this value are shown in Table (II)-C.10. As is evident from this table, the sum of the ratios between the solid-matter leakage rates and the leakage criteria, (A'a/B'b), is 2.04×10^{-6}.

On the basis of Tables (II)-C.9 and (II)-C.10, the sum of the ratios between the leakage rates of both gaseous and solid radioactive materials and the leakage criteria becomes:

Contents VIII: $8.90 \times 10^{-5} + 2.04 \times 10^{-6} = 9.2 \times 10^{-5}$

Since the ratio relative to the leakage criteria equals 0.000092, the prescribed criterion (A_2 Bq/week or less) is satisfied.

Table (II)-C.10 Leak of Radioactive Solids under Accident Test Conditions (Contents VIII)

Nuclide	xa Content (%)	X'a Leak (g/week)	Pa Specific radioactivity (Bq/g)	A'a Leakage radioactivity (Bq/week)	B'a Criteria (Bq/week)	Ratio relative to criteria A'a/B'a
Pu^{238}	0.02	5.38×10^{-11}	6.29×10^{11}	3.38×10^{1}	2.00×10^{8}	1.69×10^{-7}
Pu^{239}	80.0	2.15×10^{-8}	2.29×10^{9}	4.93×10^{1}	2.00×10^{8}	2.47×10^{-7}
Pu^{240}	5.0	6.72×10^{-9}	8.51×10^{9}	5.72×10^{1}	2.00×10^{8}	2.86×10^{-7}
Pu^{241}	10.0	2.69×10^{-9}	4.07×10^{12}	1.09×10^{4}	1.00×10^{10}	1.09×10^{-6}
Pu^{242}	5.0	1.35×10^{-9}	1.44×10^{8}	1.94×10^{-1}	2.00×10^{8}	9.70×10^{-10}
Am^{241}	1.5	4.03×10^{-10}	1.18×10^{11}	4.78×10^{1}	2.00×10^{8}	2.39×10^{-7}

Total: 2.04×10^{-6}

C.5 Summary and Evaluation of Results

Since the penetration hole sections of the package are all covered by shock absorbers, the containment system retains its initial containment under both normal and accident test conditions. The leakage rate has been calculated under normal test conditions, and the ratio between the acquired leakage rate and the leakage criteria was found to be 0.51. Whereas the ratio relative to the leakage criteria under the accident test conditions stood at 0.000092. The mandated leakage criteria stipulated by law are, therefore, satisfied.

(II)-D Shield Analysis

The objective of this analysis is to make certain that dose equivalent rates determined on the surface of (as well as at a distance of 1 meter from the surface of) the package accommodating given contents satisfy the criteria under the various specified test conditions.

D.1 Outline

The packaging is designed to accommodate irradiated uranium/plutonium mixed oxide fuel (Contents I, II, IV, V, VI, VII, and VIII) and stainless-steel structural materials (Contents III) such as wrapper tubes that have been irradiated and become radioactive. Radiation emissions such as gamma rays and neutrons that are emitted by these contents are blocked largely by the shell portion of the outer container. As shown in Fig. (II)-D.1, this portion is designed to block gamma rays and neutrons and is made up of the following, as seen from the outermost layer: the outer shell made of stainless steel, the resin layer responsible for shielding neutrons, the cement layer for heat insulation, the lead-filled layer for shielding gamma rays, and the inner shell made of stainless steel. The rear lid unit of the outer container is made up of the shielding plug lid and the rear lid as shown in Fig. (II)-D.2; and the shielding plug lid is designed to accommodate and tie down the shielding plug in transport, which is coupled to the content-filled inner container (i.e. the inner container is designed to be placed in or removed from the package with the shielding plug attached to it).

The shielding plug and the shielding plug lid use lead and a tungsten alloy (with a density of approximately 18 g/cm^3) to shield gamma rays in the axial direction. Structurally, the shielding plug, which has a conical shape, is designed to be accommodated in the inner-side hollow of the shielding plug lid.

The front lid unit of the outer container consists of a rotating plug, rotating plug lid, rotating plug lid cover, and front lid (as shown in Fig. (II)-D.3). The rotating plug is a thick disk with a center axial rod (shaft). A cylindrical penetration hole, which has a diameter that is the same as the inner diameter of the inner shell, for the rotating plug is bored perpendicularly to the axis. The penetration hole for the rotating plug can be opened/closed by rotating this plug 90 degrees. The rotating plug uses lead and a tungsten alloy to improve the gamma-ray shielding effect in the axial direction during transport. Since the rotating plug lid and the rotating plug lid cover must double as shields against gamma rays, they are made of lead and stainless steel. While retaining the rotating plug in place, they are secured to the end plate of the shell of the outer container. It should be noted that no particular neutron shielding is provided in the axial direction of the container because the sources of neutrons acting in this direction are relatively weak.

A shape model representing the package, which is not subject to deformation under normal transport conditions, was adopted.

According to the results of analyses carried out under normal test conditions, deformation occurs in the shock absorber in the case of a corner drop, and such deformation may measure up to 81 mm. To be on the safe side, it was assumed that deformations with a magnitude of 100 mm had appeared throughout the entire outer surface during this shield analysis (See Fig. (II)-D.4.).

Under accident test conditions, deformations develop in the shock absorbers in the course of Drop Test I (free drops from a height of 9m). During Drop Test II (free drops from a height of 1m), new deformations are added to the shock absorbers.

For this reason, in the case of a shield analysis involving accident test conditions, the shock absorbers were assumed to be nonexistent (See. Fig. (II)-D.4.). Nevertheless, there was no penetration through the facing plates of the outer shell in Drop Test II. Since the resulting deformations measured less than 12 mm, and the readings were sufficiently small compared with the radius of the outer shell, which measured approximately 400 mm, these deformations were ignored. Furthermore, since portions of the resin layer became carbonized during the thermal tests conducted under accident test conditions, the existence of the resin layer (measuring 82mm in thickness) was ignored in a shield analysis carried out under accident test conditions. In addition, the presence of the cement layer (measuring 10 mm in thickness) was also ignored.

Contents I, IV, V, VI, VII and VIII are accommodated in fuel supporting cans I and II or supporting cans that have a shape identical to that of fuel supporting can II. Given these types of contents, analyses were conducted on Contents I, since these exhibit the highest intensity of radioactivity. Contents II differ from Contents I, IV, V, VI, VII and VIII in that they are loaded into receiving tubes I. Whereas, in the case of Contents III, the stainless steel which has become radioactive represents a radiation source.

For the above reasons, analyses were conducted on Contents I, II, and III.

In the case of Contents I and II, the length of the fissile part was assumed to represent the length of the radiation source. In addition, the radiation source was assumed to lie at the center of the inner container when dose equivalent rates on the outside were estimated. Likewise, the radiation source was assumed to be located at the front extremity and the rear extremity when dose equivalent rates were estimated in the directions of the front lid unit and the rear lid unit.

Also, in the case of Contents III, it was assumed that the accommodated structural materials were located on the center line when dose equivalent rates on the side were estimated. Furthermore, the accommodated structural materials were assumed to be packed at the highest possible density and located at the front extremity and rear extremity of the inner container when dose equivalent rates in the directions of front and rear lid units were estimated.

The intensities of gamma-ray and neutron sources were obtained by using the depletion code ORIGEN[1].

Gamma-ray and neutron dose equivalent rate calculations have been performed using the one-dimensional discrete ordinates transport code ANISN[2] to determine the radiation in the direction perpendicular to the longitudinal direction of the inner container. Furthermore, the two-dimensional, discrete- ordinates transport code DOT3.5[3] was used to calculate the radiation in the directions of the front and rear lid units. (The cross sectional areas used for the above calculations were obtained from DLC23/CASK Library[4]).

The highest dose equivalent rates that have been determined on the surfaces of (as well as at a distance of 1 meter from the surfaces of) the package accommodating various classes of contents are shown in Table (II)-D.1.

As is evident from this table, all obtained dose equivalent rates satisfy the stipulated criteria.

---

1) M.J. Bell, ORIGEN-The ORNL Isotope generation and Depletion Code ORNL-4628 (1973).
2) W.W. Engle Jr, A User's Manual for ANISN a One Dimensional Discrete Ordinates Transport Code with Anisotropic Scattering, k-1693 (1967).
3) DOT3.5-Two Dimensional Discrete Ordinates Radiation Transport Code (1975).
4) ORNL RSIC "CASK; 40 Group Coupled Neutron and Gamma-ray Cross Section data" DLC-23 (1973)

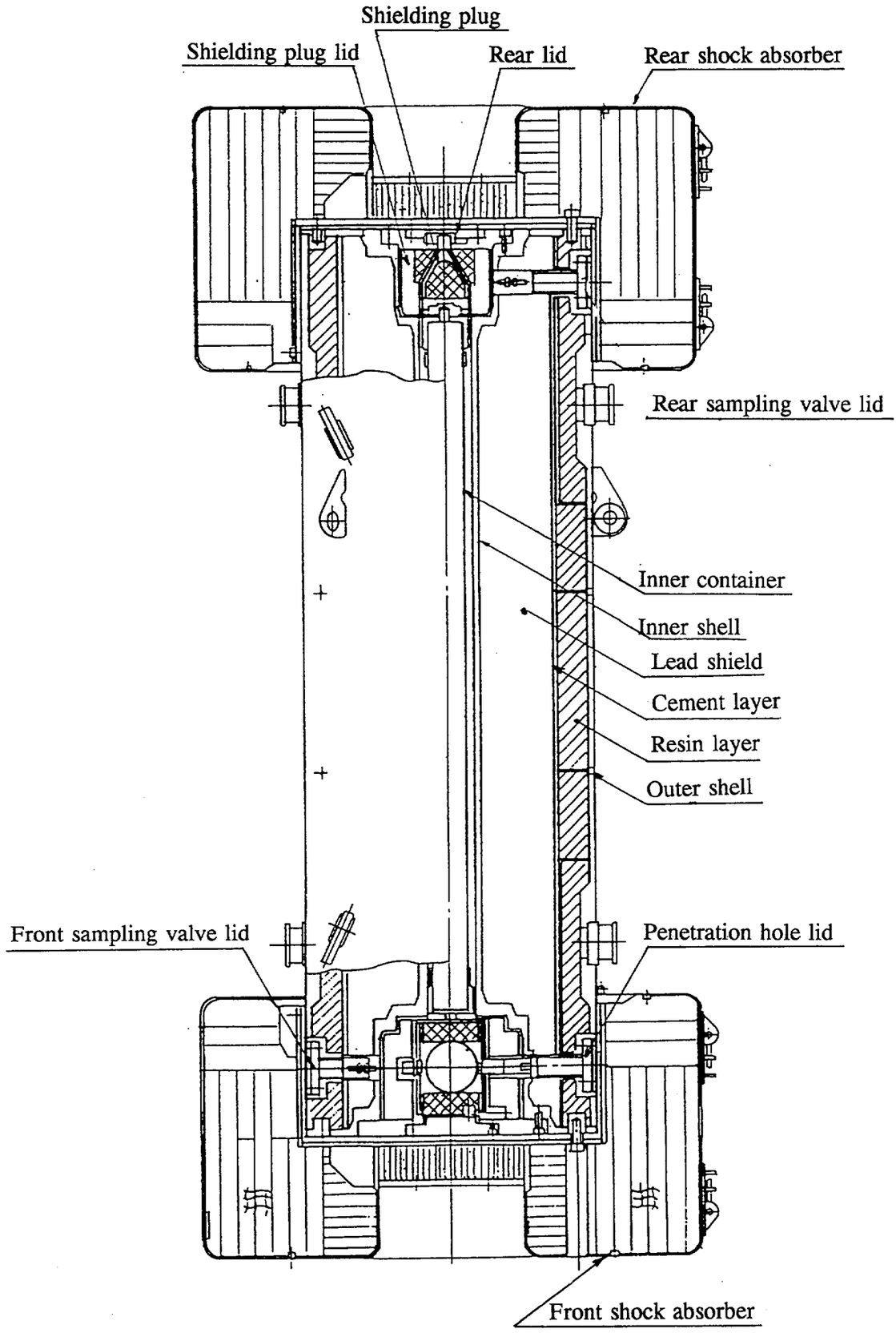

Fig. (II)-D.1 Structure of the Packaging

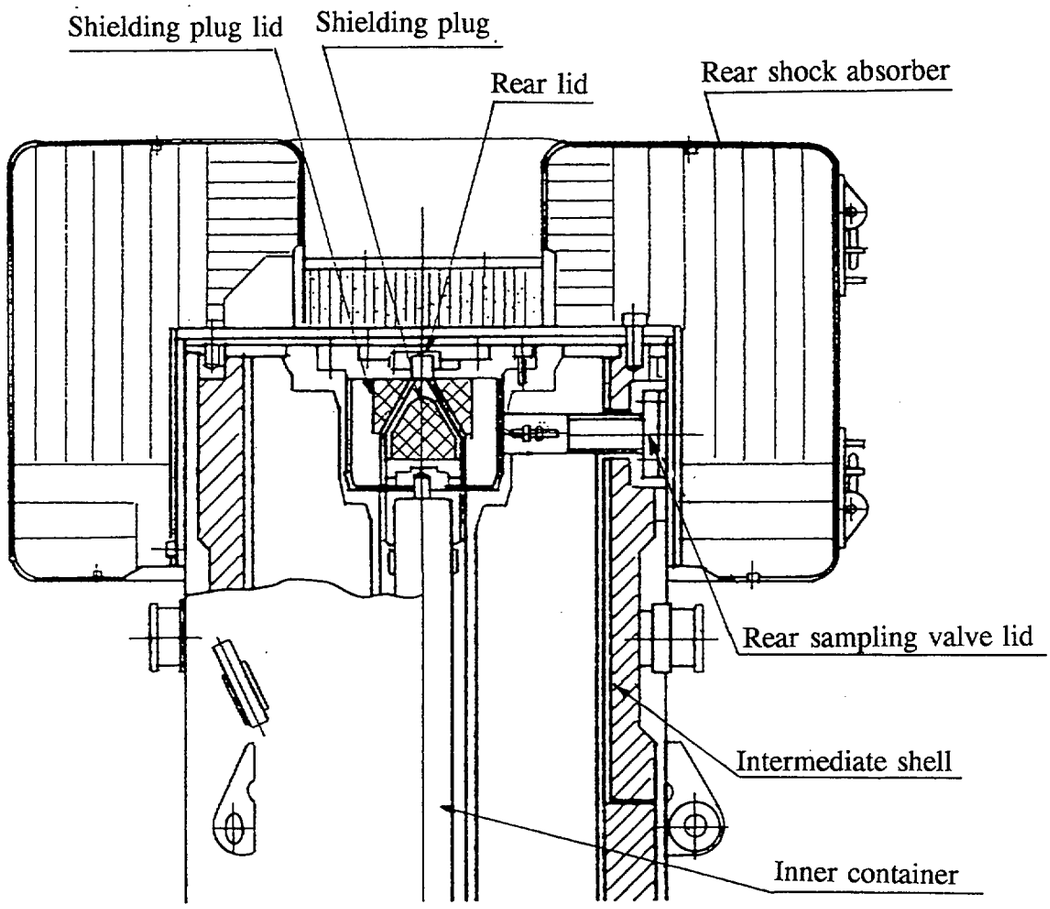

Fig. (II)-D.2 Shielding Structure of the Packaging (No.1) (Adjacent rear lid unit)

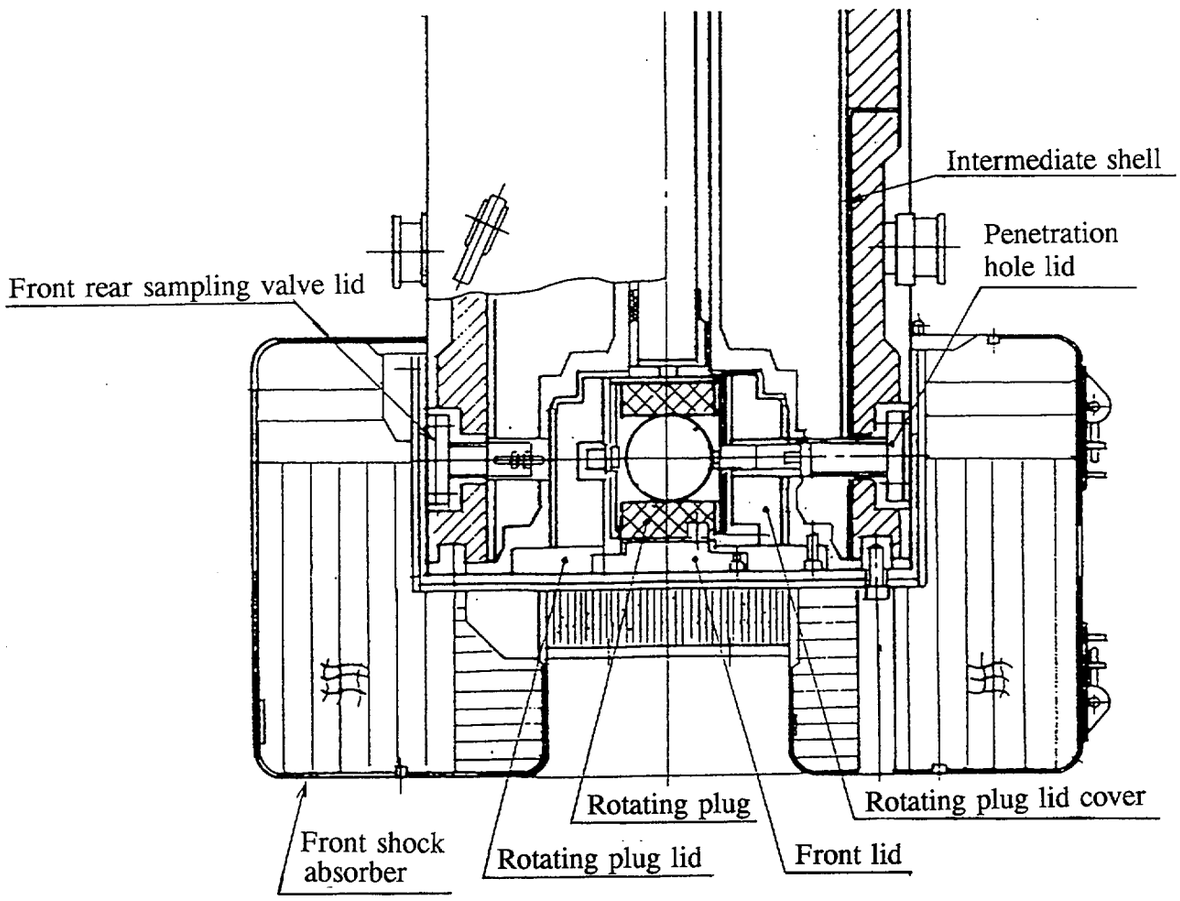

Fig. (II)-D.3 Shielding Structure of the Packaging (No.2) (Adjacent front lid unit)

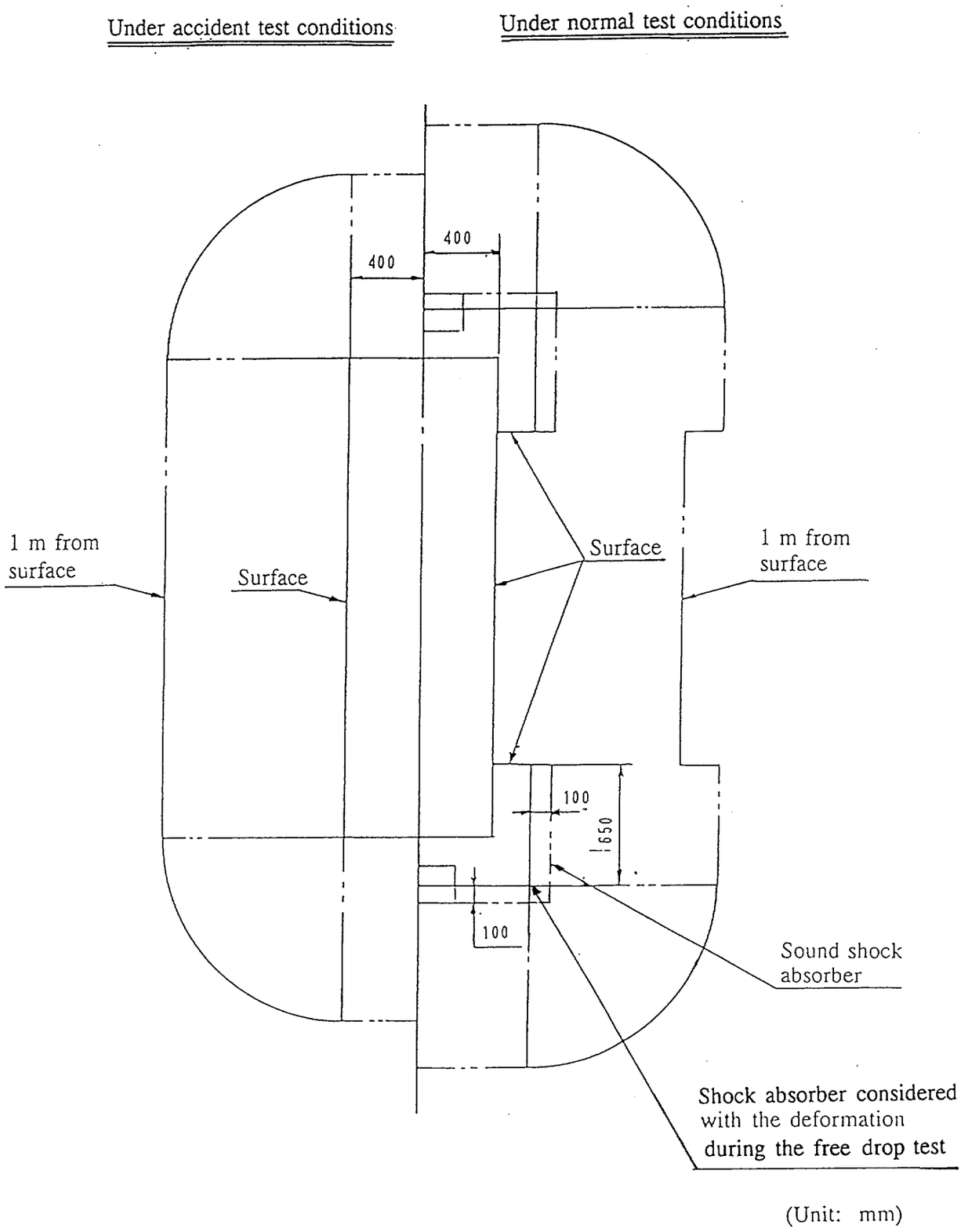

Fig. (II).4 Surface of the Package and the Position 1 m from the Surface for Shield Analysis

Table (II)-D.1 Summary Listing of Maximum Dose Equivalent Rates

Con-ditions	Contents	Maximum dose equivalent rate (μSv/h)	
		On package surfaces	At 1 m from package surfaces
During normal transport	Contents I	448.5	65.7
	Contents II	230.0	36.0
	Contents III	33.3	5.2
	Criteria	2000	100
Normal test conditions	Contents I	448.5	-
	Contents II	230.0	
	Contents III	33.3	
	Criteria	2000	-
Accident test conditions	Contents I	-	251.1
	Contents II		133.4
	Contents III		23.1
	Criteria	-	10000

D.2 Specifications of Radiation Sources

Contents are classed under eight groups: Contents I, II, III, IV, V, VI, VII, and VIII. (See Section D. of Chapter (I) "Contents of Packaging.") Contents from different groups will not be accommodated in the same packaging.

The burn-up conditions that were employed in the shield analysis of Contents I, II, IV, V, VI, VII, and VIII are shown in Table (II)-D.2, whereas those adopted for Contents III are shown in Table (II)-D.3.

Based on the burn-up conditions of the individual contents classes, gamma-ray and neutron source intensities were obtained by using the depletion code ORIGEN. In conducting radiation-source intensity calculations, it was hypothesized that burn-up is continuous, to be on the safe side.

D.2.1 Sources of Gamma Rays

(1) Contents I, IV, V, VI, VII, and VIII

Contents I, IV, V, VI, VII, and VIII are identical to one another in terms of how they are accommodated in the package. In other words, they are accommodated in fuel supporting cans I and II or in cans that have an identical configuration (shape) to that of fuel supporting can II.

The results of the radiation-source intensity calculations performed using the depletion code ORIGEN are shown in Tables (II)-D.4, -D.5, -D.6, -D.7, -D.8, and -D.9.

Contents I include Contents IV and V, since these are identical to Contents I in terms of the configuration (shape) of radiation sources, and produce the highest radiation readings among all the classes of contents.

Contents VI are approximately two times greater than Contents I in terms of the length of the radiation sources, but equal Contents I in terms of the intensity of the radiation sources.

Contents VII are approximately two times greater than Contents I in terms of the length of the radiation sources, although their radiation-source intensity is approximately one-fiftieth of that of Contents I.

Contents VIII are approximately 1.3 times greater than Contents I in terms of the length of the radiation sources, but their radiation-source intensity is only about one-half of that of Contents I.

For the reasons stated above, Contents I, which top all others in terms of radiation-source intensity, were treated as representative of the following classes of radiation sources: Contents I, IV, V, VI, VII, and VIII.

The specifications of the gamma rays used in the shield analysis are listed in Table (II)-D.10.

(2) Contents II

Contents II differ from Contents I, IV, V, VI, VII, and VIII in terms of radiation-source configuration (shape). Contents II are, therefore, accommodated into receiving tubes I.

The results of radiation-source intensity calculations performed using the ORIGEN depletion code are shown in Table (II)-D.11.

The specifications of gamma-ray sources used for the shield analysis are shown in Table (II)-D.10.

(3) Contents III

Contents III represent radioactive structural materials composed of SUS316.
The results of radiation-source intensity calculations performed using the ORIGEN depletion code are shown in Table (II)-D.12.

D.2.2 Neutron Sources

Neutron-generation mechanisms include (α, n) the reactions of oxygen with transuranic elements, and spontaneous fission. The results of calculations performed using the ORIGEN depletion code to determine the number of neutrons that are generated are shown in Tables (II)-D.4 through (II)-D.9. In the case of Contents I, II, IV, V, VI, VII, and VIII, spontaneous fission neutrons account for approximately 70% of all neutrons that are generated.

For this reason, the energy spectrum of the neutrons is evaluated as a nuclear fission spectrum. (See Table (II)-D.21.)

(1) Contents I, IV, V, VI, VII, and VIII

Contents I, IV, V, VI, VII, and VIII are identical to one another in terms of the way they are housed; they are accommodated into fuel supporting cans I and II or supporting cans that are identical to fuel supporting can II in terms of configuration.
As shown in Tables (II)-D.4 through (II)-D.9, Contents I generate neutrons in the greatest amounts.
As with the sources of gamma rays discussed earlier, Contents I are treated as representative of Contents I, IV, V, VI, VII, and VIII, and the numbers of neutrons released by Contents I are used for the shield analysis.

(2) Contents II

Contents II differ from Contents I, IV, V, VI, VII, and VIII in terms of radiation-source configuration. Contents II are, therefore, accommodated into receiving tubes I.
The numbers of neutrons generated are shown in Table (II)-D.11 and are used for the shield analysis.
The package is a subcriticality vessel. Given that the package's subcriticality multiplication factor = k_{eff}, the number of neutrons that are actually generated inside the package is given by multiplication by a factor of $1/(1-k_{eff})$ by virtue of the multiplication effect.
Since k_{eff} is 0.179, referring to the results of the criticality analysis discussed later on in Section E. of Chapter II, under normal transport conditions (when no water has seeped into the interior of the package), the intensity of the neutron sources to be referred to in the shield analysis is obtained by multiplying the numbers of neutrons released from Contents I and II by $1/(1-k_{eff}) = 1.22$. Calculation results are shown in Table (II)-D.13.

Table (II)-D.2 Burn-up Conditions for Radiation-Source Intensity Calculations

Item	Contents I	Contents II	Contents IV	Contents V	Contents VI	Contents VII	Contents VIII
Reactor type	FBR	FBR	FBR	FBR	FBR	LWR	FBR
Irradiation conditions							
Fissile part							
Burn-up MWD/MTM	90,000	150,000	90,000	5,200	110,000	11,000	200,000
Specific power MW/MTM	300	300	300	300	300	60	166
Fertile part							
Neutron flux n/s/cm^2	6.6×10^{15}	3.9×10^{15}	6.6×10^{15}	4.8×10^{16}	5.4×10^{15}	6.9×10^{13}	4.8×10^{15}
Fluence n/cm^2	17×10^{22}	17×10^{22}	17×10^{22}	7.5×10^{22}	17×10^{22}	0.1×10^{22}	50×10^{22}
Irradiation time/cooling time (days)	300/180 (Continous)	500/180 (Continuous)	300/180 (Continuous)	18/93 (Continuous)	367/300 (Continuous)	184/3,600 (Continuous)	1,210/360 (Continuous)
Fuel composition							
Fissile part	31W/oPuO_2-UO_2 (Natural uranium)	21W/oPuO_2-UO_2 (Natural uranium)	31W/oPuO_2-UO_2 (Natural uranium)	18W/oPuO_2-UO_2 (Natural uranium)	31W/oPuO_2-UO_2 (Natural uranium)	3.2W/oPuO_2-UO_2 (Natural uranium)	31W/oPuO_2-UO_2 (Natural uranium)
Composition of Pu isotopes g							
^{238}Pu	1.18	0.16	0.73	0.62	0.43	-	0.90
^{239}Pu	472.47	64.01	290.42	248.94	348.00	185.40	450.00
^{240}Pu	147.65	20.00	90.76	77.79	87.00	18.14	108.00
^{241}Pu	59.06	8.00	36.30	31.12	21.70	2.02	18.00
^{242}Pu	29.53	4.00	18.15	15.56	4.35	0.20	4.50
^{241}Am	8.86	1.20	5.45	4.67	2.17	-	2.70
Fertile part	UO_2 (Natural uranium)	UO_2 (Natural uranium)	UO_2 (Natural uranium)	UO_2 (Natural uranium)	UO_2 (Natural uranium)	UO_2 (Natural uranium)	UO_2 (Natural uranium)
Weight of oxide							
Fissile part g	2,160	432	1,960	1,960	1,590	7,140	1,710
Fertile part g	990	324	2,632	2,632	740	150	1,535

Table (II)-D.3 Burn-up Conditions for Radiation-Source Intensity Calculations

Item	Contents III
Reactor type	FBR
Neutron flux $n/s/cm^2$	5.80×10^{15}
Fluence n/cm^2	5.00×10^{23}
Irradiation time/cooling time (days)	1,000 (continuous)/300
Weight	5 kg
SUS316 composition* (W/o)	
C	0.08
Si	1.00
Mn	2.00
P	0.0040
S	0.030
Ni	14.00
Cr	18.00
Mo	3.00
Co	0.10
B	0.0005
N	0.010
Cu	0.20
Ti	0.0100
V	0.200
Nb	0.050
As	0.0030
Al	0.050
Fe	72.00

* According to PNC-prepared reference material and JIS Handbook governing ferrous materials and metallurgy.

Table (II)-D.4 Contents-I Radiation-Source Intensity Calculation Results

	Fissile part	Fertile part	Total
Principal nuclides* and their radio-activity	Bq	Bq	Bq
^{3}H	1.96×10^{11}	1.05×10^{10}	2.06×10^{11}
^{85}Kr	1.57×10^{12}	1.10×10^{11}	1.68×10^{12}
^{129}I	7.25×10^{6}	4.03×10^{5}	7.66×10^{6}
^{131}I	1.18×10^{8}	9.32×10^{6}	1.28×10^{8}
^{131m}Xe	4.07×10^{8}	3.17×10^{7}	4.40×10^{8}
^{95}Zr	1.40×10^{14}	1.05×10^{13}	1.51×10^{14}
^{95}Nb	2.70×10^{14}	2.02×10^{13}	2.91×10^{14}
^{106}Ru	2.59×10^{14}	1.23×10^{13}	2.72×10^{14}
^{106}Rh	2.59×10^{14}	1.23×10^{13}	2.72×10^{14}
^{144}Ce	2.23×10^{14}	1.62×10^{13}	2.40×10^{14}
^{144}Pr	2.23×10^{14}	1.62×10^{13}	2.40×10^{14}
^{242}Cm	3.32×10^{13}	~ 0	3.32×10^{13}
Overall radioactivity	1.92×10^{15}	1.16×10^{14}	2.03×10^{15}
Group Energy-group	ph/s	ph/s	ph/s
1 ~ 0.4 MeV	8.99×10^{13}	5.50×10^{12}	9.54×10^{13}
2 0.4 ~ 0.9 MeV	6.65×10^{14}	4.63×10^{13}	7.11×10^{14}
3 0.9 ~ 1.35 MeV	1.66×10^{13}	8.39×10^{11}	1.74×10^{13}
4 1.35 ~ 1.8 MeV	3.12×10^{12}	1.67×10^{11}	3.29×10^{12}
5 1.8 ~ 2.2 MeV	2.46×10^{12}	1.63×10^{11}	2.62×10^{12}
6 2.2 ~ 2.6 MeV	4.51×10^{11}	2.17×10^{10}	4.73×10^{11}
7 2.6 ~ 3.0 MeV	3.48×10^{10}	1.66×10^{9}	3.65×10^{10}
8 3.0 ~ MeV	1.10×10^{9}	5.23×10^{7}	1.12×10^{9}
	n/s	n/s	n/s
Neutrons (α, n)	2.86×10^{6}	3.85×10^{3}	2.86×10^{6}
Spontaneous fission neutrons	6.63×10^{6}	1.25×10^{3}	6.63×10^{6}
Total	9.49×10^{6}	5.10×10^{3}	9.50×10^{6}
Total decay heat	2.43×10^{2} W	1.34×10^{1} W	2.56×10^{2} W

* These are the principal nuclides concerned with thermal analysis, containment analysis, and shield analysis.

Table (II)-D.5 Contents-IV Radiation-Source Intensity Calculation Results

	Fissile part	Fertile part	Total
Principal nuclides* and their radio-activity	Bq	Bq	Bq
^{3}H	1.78×10^{11}	2.28×10^{10}	2.01×10^{11}
^{85}Kr	1.42×10^{12}	2.39×10^{11}	1.67×10^{12}
^{129}I	6.59×10^{6}	8.81×10^{5}	7.47×10^{6}
^{131}I	1.07×10^{8}	2.04×10^{7}	1.28×10^{8}
^{131m}Xe	3.70×10^{8}	6.92×10^{7}	4.40×10^{8}
^{95}Zr	1.27×10^{14}	2.29×10^{13}	1.50×10^{14}
^{95}Nb	2.45×10^{14}	4.40×10^{13}	2.67×10^{14}
^{106}Ru	2.35×10^{14}	2.69×10^{13}	2.62×10^{14}
^{106}Rh	2.35×10^{14}	2.69×10^{13}	2.62×10^{14}
^{144}Ce	2.03×10^{14}	3.54×10^{13}	2.38×10^{14}
^{144}Pr	2.03×10^{14}	3.54×10^{13}	2.38×10^{14}
^{242}Cm	3.01×10^{13}	~ 0	3.01×10^{13}
Overall radioactivity	1.74×10^{15}	2.53×10^{14}	1.99×10^{15}
Group Energy-group	ph/s	ph/s	ph/s
1 ~ 0.4 MeV	8.16×10^{13}	1.20×10^{13}	8.28×10^{13}
2 0.4 ~ 0.9 MeV	6.03×10^{14}	1.01×10^{14}	7.04×10^{14}
3 0.9 ~ 1.35 MeV	1.51×10^{13}	1.83×10^{12}	1.69×10^{13}
4 1.35 ~ 1.8 MeV	2.83×10^{12}	3.64×10^{11}	3.19×10^{12}
5 1.8 ~ 2.2 MeV	2.23×10^{12}	3.56×10^{11}	2.59×10^{12}
6 2.2 ~ 2.6 MeV	4.09×10^{11}	4.73×10^{10}	4.56×10^{11}
7 2.6 ~ 3.0 MeV	3.16×10^{10}	3.62×10^{9}	3.52×10^{10}
8 3.0 ~ MeV	9.98×10^{8}	1.14×10^{7}	1.01×10^{9}
	n/s	n/s	n/s
Neutrons (α, n)	2.60×10^{6}	8.40×10^{3}	2.61×10^{6}
Spontaneous fission neutrons	6.02×10^{6}	2.73×10^{3}	6.02×10^{6}
Total	8.61×10^{6}	1.11×10^{3}	8.61×10^{6}
Total decay heat	2.20×10^{2} W	2.92×10^{1} W	2.49×10^{2} W

* These are the principal nuclides concerned with thermal analysis, containment analysis, and shield analysis.

Table (II)-D.6 Contents-V Radiation-Source Intensity Calculation Results

	Fissile part	Fertile part	Total
Principal nuclides* and their radio-activity	Bq	Bq	Bq
^{3}H	9.03×10^{9}	2.43×10^{8}	9.29×10^{9}
^{85}Kr	1.02×10^{11}	2.75×10^{9}	1.05×10^{11}
^{129}I	3.92×10^{5}	1.06×10^{4}	4.03×10^{5}
^{131}I	7.77×10^{10}	2.09×10^{9}	7.99×10^{10}
^{131m}Xe	2.04×10^{10}	5.48×10^{8}	2.09×10^{10}
^{95}Zr	5.00×10^{13}	1.35×10^{12}	5.14×10^{13}
^{95}Nb	6.88×10^{13}	1.85×10^{12}	7.07×10^{13}
^{106}Ru	1.01×10^{14}	2.72×10^{12}	1.04×10^{14}
^{106}Rh	1.01×10^{14}	2.72×10^{12}	1.04×10^{14}
^{144}Ce	2.32×10^{13}	6.25×10^{11}	2.39×10^{13}
^{144}Pr	2.33×10^{13}	6.26×10^{11}	2.39×10^{13}
^{242}Cm	3.50×10^{5}	~ 0	3.50×10^{5}
Overall radioactivity	3.74×10^{14}	1.01×10^{13}	3.85×10^{14}
Group Energy-group	ph/s	ph/s	ph/s
1 ~ 0.4 MeV	1.18×10^{13}	3.18×10^{11}	1.21×10^{13}
2 0.4 ~ 0.9 MeV	1.74×10^{14}	4.69×10^{12}	1.79×10^{14}
3 0.9 ~ 1.35 MeV	1.16×10^{12}	3.12×10^{10}	1.25×10^{12}
4 1.35 ~ 1.8 MeV	2.67×10^{12}	7.19×10^{10}	2.74×10^{12}
5 1.8 ~ 2.2 MeV	2.30×10^{11}	6.20×10^{9}	2.36×10^{12}
6 2.2 ~ 2.6 MeV	9.92×10^{10}	2.67×10^{9}	1.02×10^{11}
7 2.6 ~ 3.0 MeV	1.36×10^{9}	3.66×10^{7}	1.40×10^{9}
8 3.0 ~ MeV	4.29×10^{7}	1.16×10^{6}	4.41×10^{7}
	n/s	n/s	n/s
Neutrons (α, n)	2.95×10^{4}	7.95×10^{2}	3.03×10^{4}
Spontaneous fission neutrons	1.08×10^{3}	2.91×10^{1}	1.11×10^{3}
Total	3.06×10^{4}	8.24×10^{2}	3.14×10^{4}
Total decay heat	6.08×10^{1} W	1.46×10^{0} W	6.24×10^{1} W

* These are the principal nuclides concerned with thermal analysis, containment analysis, and shield analysis.

Table (II)-D.7 Contents-VI Radiation-Source Intensity Calculation Results

	Fissile part	Fertile part	Total
Principal nuclides* and their radio-activity	Bq	Bq	Bq
^{3}H	1.96×10^{11}	9.03×10^{9}	2.05×10^{11}
^{85}Kr	2.70×10^{12}	9.21×10^{10}	2.79×10^{12}
^{129}I	1.05×10^{7}	3.61×10^{5}	1.08×10^{7}
^{131}I	1.18×10^{8}	1.38×10^{2}	1.18×10^{8}
^{131m}Xe	4.07×10^{8}	1.27×10^{4}	4.07×10^{8}
^{95}Zr	1.40×10^{14}	1.44×10^{12}	1.42×10^{14}
^{95}Nb	2.70×10^{14}	3.02×10^{12}	2.73×10^{14}
^{106}Ru	2.59×10^{14}	7.33×10^{12}	2.66×10^{14}
^{106}Rh	2.59×10^{14}	7.33×10^{12}	2.66×10^{14}
^{144}Ce	2.23×10^{14}	8.18×10^{12}	2.32×10^{14}
^{144}Pr	2.23×10^{14}	8.18×10^{12}	2.32×10^{14}
^{242}Cm	3.32×10^{13}	2.85×10^{8}	3.32×10^{13}
Overall radioactivity	1.92×10^{15}	4.51×10^{13}	1.97×10^{15}
Group Energy-group	ph/s	ph/s	ph/s
1 ~ 0.4 MeV	8.99×10^{13}	2.70×10^{12}	9.26×10^{13}
2 0.4 ~ 0.9 MeV	6.65×10^{14}	1.00×10^{13}	6.75×10^{14}
3 0.9 ~ 1.35 MeV	1.66×10^{13}	4.69×10^{11}	1.71×10^{13}
4 1.35 ~ 1.8 MeV	3.12×10^{12}	9.07×10^{10}	3.21×10^{12}
5 1.8 ~ 2.2 MeV	2.46×10^{12}	8.48×10^{10}	2.54×10^{12}
6 2.2 ~ 2.6 MeV	4.51×10^{11}	1.28×10^{10}	4.64×10^{11}
7 2.6 ~ 3.0 MeV	3.48×10^{10}	9.84×10^{8}	3.58×10^{10}
8 3.0 ~ MeV	1.10×10^{9}	3.11×10^{7}	1.13×10^{9}
	n/s	n/s	n/s
Neutrons (α, n)	2.86×10^{6}	3.29×10^{3}	2.86×10^{6}
Spontaneous fission neutrons	6.63×10^{6}	1.18×10^{3}	6.63×10^{6}
Total	9.49×10^{6}	4.46×10^{3}	9.50×10^{6}
Total decay heat	2.43×10^{2} W	5.19×10^{0} W	2.49×10^{2} W

* These are the principal nuclides concerned with thermal analysis, containment analysis, and shield analysis.

Table (II)-D.8 Contents-VII Radiation-Source Intensity Calculation Results

	Total
Principal nuclides* and their radio-activity	Bq
^{3}H	2.17×10^{10}
^{85}Kr	1.97×10^{11}
^{129}I	3.29×10^{6}
^{131}I	0.00
^{131m}Xe	0.00
^{95}Zr	1.24×10^{-9}
^{95}Nb	2.66×10^{-9}
^{106}Ru	6.18×10^{9}
^{106}Rh	6.18×10^{9}
^{144}Ce	4.51×10^{8}
^{144}Pr	4.51×10^{8}
^{242}Cm	3.37×10^{9}
Overall radioactivity	3.74×10^{13}
Group Energy-group	ph/s
1 ~ 0.4 MeV	5.07×10^{11}
2 0.4 ~ 0.9 MeV	6.18×10^{12}
3 0.9 ~ 1.35 MeV	1.02×10^{11}
4 1.35 ~ 1.8 MeV	3.42×10^{9}
5 1.8 ~ 2.2 MeV	5.12×10^{7}
6 2.2 ~ 2.6 MeV	1.06×10^{7}
7 2.6 ~ 3.0 MeV	8.88×10^{5}
8 3.0 ~ MeV	3.71×10^{4}
	n/s
Neutrons (α, n)	5.70×10^{4}
Spontaneous fission neutrons	1.31×10^{5}
Total	1.88×10^{5}
Total decay heat	2.3 W

* These are the principal nuclides concerned with thermal analysis, containment analysis, and shield analysis.

Table (II)-D.9 Contents-VIII Radiation-Source Intensity Calculation Results

	Total
Principal nuclides* and their radio-activity	Bq
^{3}H	3.50×10^{11}
^{85}Kr	6.34×10^{12}
^{129}I	2.10×10^{7}
^{131}I	1.59×10^{1}
^{131m}Xe	7.33×10^{3}
^{95}Zr	1.82×10^{13}
^{95}Nb	3.86×10^{13}
^{106}Ru	1.51×10^{14}
^{106}Rh	1.51×10^{14}
^{144}Ce	2.35×10^{14}
^{144}Pr	2.35×10^{14}
^{242}Cm	3.12×10^{12}
Overall radioactivity	1.27×10^{15}
Group Energy-group	ph/s
1 ~ 0.4 MeV	7.03×10^{13}
2 0.4 ~ 0.9 MeV	2.22×10^{14}
3 0.9 ~ 1.35 MeV	1.07×10^{13}
4 1.35 ~ 1.8 MeV	2.37×10^{12}
5 1.8 ~ 2.2 MeV	2.30×10^{12}
6 2.2 ~ 2.6 MeV	2.65×10^{11}
7 2.6 ~ 3.0 MeV	2.02×10^{10}
8 3.0 ~ MeV	6.40×10^{8}
	n/s
Neutrons (α, n)	4.15×10^{5}
Spontaneous fission neutrons	8.15×10^{5}
Total	1.23×10^{6}
Total decay heat	1.63×10^{2} W

* These are the principal nuclides concerned with thermal analysis, containment analysis, and shield analysis.

Table (II)-D.10 Gamma Ray Source Specification (for Shield Analysis)

Item					Contents I	Contents II
Fuel pins					15	6
Source length cm					72	36
Group	Gamma-ray energy-group				ph/s	ph/s
1		~	0.4	MeV	9.54×10^{13}	2.56×10^{13}
2	0.4	~	0.9	MeV	7.11×10^{14}	1.65×10^{14}
3	0.9	~	1.35	MeV	1.74×10^{13}	4.99×10^{12}
4	1.35	~	1.8	MeV	3.29×10^{12}	1.00×10^{12}
5	1.8	~	2.2	MeV	2.62×10^{12}	7.12×10^{11}
6	2.2	~	2.6	MeV	4.73×10^{11}	1.32×10^{11}
7	2.6	~	3.0	MeV	3.65×10^{10}	1.01×10^{10}
8	3.0	~		MeV	1.12×10^{9}	3.21×10^{8}

Table (II)-D.11 Contents-II Radiation-Source Intensity Calculation Results

	Fissile part	Fertile part	Total
Principal nuclides* and their radioactivity	Bq	Bq	Bq
^{3}H	6.48×10^{10}	2.49×10^{9}	6.73×10^{10}
^{85}Kr	5.18×10^{11}	2.65×10^{10}	5.44×10^{11}
^{129}I	2.35×10^{6}	9.81×10^{4}	2.45×10^{6}
^{131}I	2.39×10^{7}	1.35×10^{6}	2.52×10^{7}
^{131m}Xe	8.18×10^{7}	4.63×10^{6}	8.66×10^{7}
^{95}Zr	2.95×10^{13}	1.66×10^{12}	3.12×10^{13}
^{95}Nb	5.74×10^{13}	3.20×10^{12}	6.07×10^{13}
^{106}Ru	7.29×10^{13}	2.56×10^{12}	9.84×10^{13}
^{106}Rh	7.29×10^{13}	2.56×10^{12}	9.84×10^{13}
^{144}Ce	6.14×10^{13}	3.30×10^{12}	9.44×10^{13}
^{144}Pr	6.14×10^{13}	3.30×10^{12}	9.44×10^{13}
^{242}Cm	6.73×10^{12}	~ 0	6.73×10^{12}
Overall radioactivity	4.74×10^{14}	2.17×10^{13}	4.96×10^{14}
Group Energy-group	ph/s	ph/s	ph/s
1 ~ 0.4 MeV	2.45×10^{13}	1.10×10^{12}	2.56×10^{13}
2 0.4 ~ 0.9 MeV	1.57×10^{14}	7.69×10^{12}	1.65×10^{14}
3 0.9 ~ 1.35 MeV	4.82×10^{12}	1.71×10^{11}	4.99×10^{12}
4 1.35 ~ 1.8 MeV	9.68×10^{11}	3.38×10^{10}	1.00×10^{12}
5 1.8 ~ 2.2 MeV	6.79×10^{11}	3.33×10^{10}	7.12×10^{11}
6 2.2 ~ 2.6 MeV	1.27×10^{11}	4.50×10^{9}	1.32×10^{11}
7 2.6 ~ 3.0 MeV	9.79×10^{9}	3.44×10^{8}	1.01×10^{10}
8 3.0 ~ MeV	3.10×10^{8}	1.09×10^{7}	3.21×10^{8}
	n/s	n/s	n/s
Neutrons (α, n)	5.78×10^{5}	9.76×10^{2}	5.79×10^{5}
Spontaneous fission neutrons	1.89×10^{6}	2.80×10^{2}	1.89×10^{6}
Total	2.47×10^{6}	1.26×10^{3}	2.47×10^{6}
Total decay heat	6.09×10^{1} W	2.48×10^{0} W	6.34×10^{1} W

* These are the principal nuclides concerned with thermal analysis, containment analysis, and shield analysis.

Table (II)-D.12 Contents-III Radiation-Source Intensity Calculation Results

(per 5 kg)

Principal nuclides* and their radioactivity	Bq
^{45}Sc	3.09×10^{8}
^{54}Mn	6.62×10^{13}
^{55}Fe	6.92×10^{13}
^{59}Fe	8.44×10^{10}
^{58}Co	2.57×10^{13}
^{60}Co	1.80×10^{12}
Overall radioactivity	1.63×10^{14}
Group Gamma-ray energy-group	**ph/s**
1 ~ 0.4 MeV	4.21×10^{9}
2 0.4 ~ 0.9 MeV	1.27×10^{14}
3 0.9 ~ 1.35 MeV	4.19×10^{12}
4 1.35 ~ 1.8 MeV	1.67×10^{11}
5 1.8 ~ 2.2 MeV	3.06
6 2.2 ~ 2.6 MeV	0.0
7 2.6 ~ 3.0 MeV	0.0
Total decay heat	2.72×10^{1} W

* These are the principal nuclides concerned with thermal analysis, containment analysis, and shield analysis.

Table (II)-D.13 Specifications of Neutron Sources (for the shield analysis)

		Contents I	Contents II
Results of calculations done using the ORIGEN depletion code	Neutrons generated by (α, n) reactions	2.86×10^{6}	5.79×10^{5}
	Neutrons generated by spontaneous fission	6.63×10^{6}	1.89×10^{6}
	Total n/s	9.50×10^{6}	2.47×10^{6}
Overall neutron-source intensity given the multiplication effect n/s		1.16×10^{7}	3.01×10^{6}

D.3 Specifications of Models

D.3.1 Analysis Models

(1) Modeling of shock absorbers

Under normal transport conditions, the package does not become deformed.

During the free-fall drop test conducted under normal test conditions, deformations develop in the shock absorbers of the package. According to the results of the structural evaluation, the largest deformation was formed when a shock absorber collided against the floor in a corner-first drop. This deformation measured 82 mm. In modeling the package, a deformation of 100 mm is assumed to have developed all over the surface of the shock absorbers (see Fig. (II)-D.5). In other words, it is assumed that the surfaces of the shock absorbers have collapsed uniformly by 100 mm. Therefore, these indented surface are assumed to represent the surfaces of the package.

At the same time, the balsa wood and fir-plywood in the shock absorbers are replaced with a vacuum, and the stainless steel forming the shock absorbers' inner surfaces is assumed to be integrated with the steel plate of the outer shell portion. Furthermore, the existence of the shock absorbers' facing plates and cement layer are ignored. As for the packaging body, since it is not deformed under normal test conditions, its external shape is used as is.

First, a deformation in the package results from Drop Test I (a free fall from a height of 9 m) carried out under accident test conditions. As indicated in the structural evaluation, such deformation develops only in a shock absorber and the packaging body suffers no deformation. Second, the package suffers deformations in its shock absorbers and packaging body (the outer shell portion) in the course of Drop Test II (penetration drop test from a height of 1 m). Since these deformations add to the deformations that have developed earlier during Drop Test I, considerable deformations appear in the shock absorbers. For this reason, it is assumed that the shock absorbers are nonexistent under accident test conditions. Since those Drop Test II-inflicted deformations measure less than 10 mm on the packaging body (outer shell) and are sufficiently small compared with the outer radius (400 mm) of the outer shell section of the packaging body, such deformations are ignored. Thus, the surfaces of the model representing the package under accident test conditions correspond to the outer surfaces of the packaging body.

The surfaces of the package for purposes of conducting an analysis are pictured in Fig. (II)-D.6.

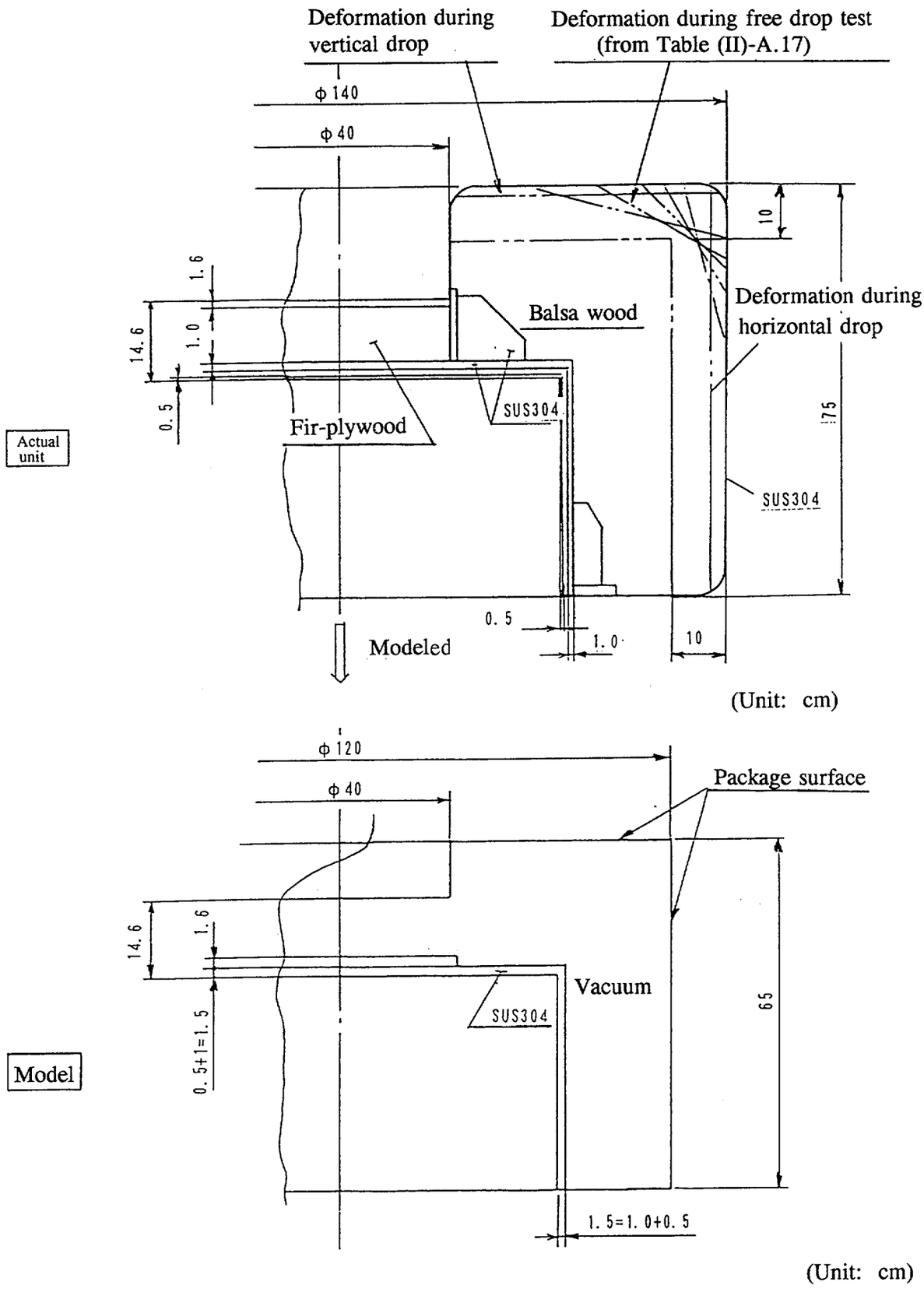

Fig. (II)-D.5 Shock Absorber Model under Normal Conditions

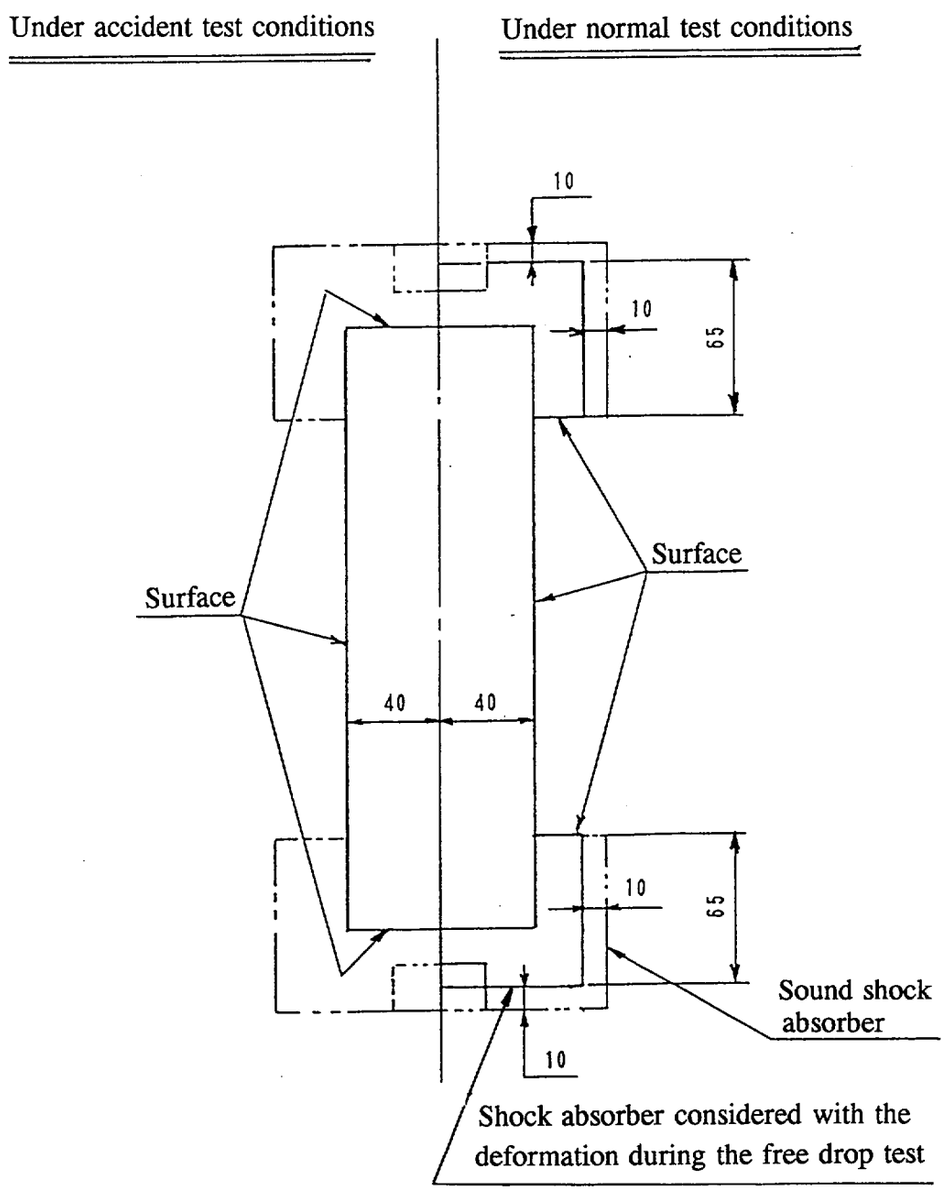

(Unit: cm)

Fig. (II)-D.6 Surface of the Package for Shield Analysis

(2) Shield-analysis model representing packaging body

(2)-1 Periphery of the packaging body

Under normal test conditions, no deformation develops in the packaging itself. The periphery of the packaging body has a wall thickness of 40 mm in places where the pivoting trunnions and the lifting trunnions are installed, and 16 mm in all other places. In each trunnion-mounting section, there is a 6mm-thick intermediate shell.

The wall thickness of the model representing the packaging body under normal test conditions is set to 16 mm, meaning that the existence of the intermediate shells is ignored. Furthermore, the heat-dispersion fins located within the resin layer are treated as voids and the layer's resin density is corrected accordingly. Under normal test conditions, the bismuth fusible plugs installed on the periphery of the packaging body do not melt. Although bismuth outweighs and outperforms stainless steel in terms of its ability to shield gamma rays, these fusible plugs are here replaced with stainless steel. (See Fig. (II)-D.7.)

In the course of a thermal test conducted under accident test conditions, a portion of the resin layer becomes carbonized. For this reason, the resin layer is replaced with a vacuum. In addition, the cement layer is also replaced with a vacuum. (See Fig. (II)-D.8.)

(2)-2 Front and rear lid units of the packaging body

Under normal test conditions, the packaging body maintains its integrity. The rear lid unit of the packaging itself shown in Fig. (II)-D.9 is reduced to a model which is shown in Fig. (II)-D.10 to enable a shield analysis under normal test conditions. Likewise, Figs. (II)-D.11 and -D.12 show the front lid unit and its model, respectively.

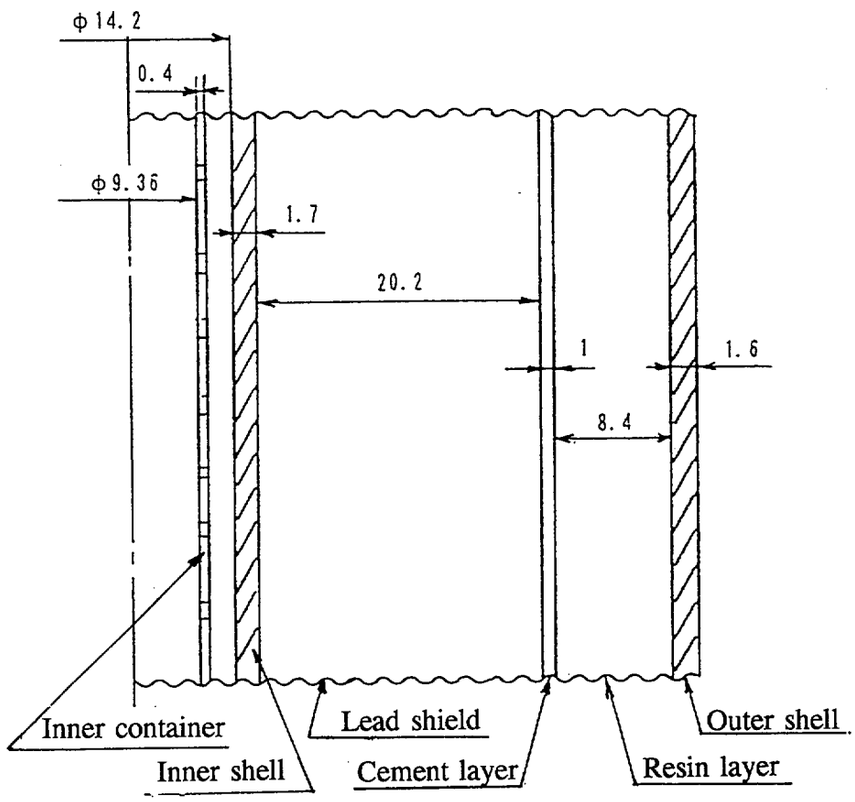

(in cm)

Fig. (II)-D.7 Shield Analytical Model of the Container Side Section under Normal Test Conditions

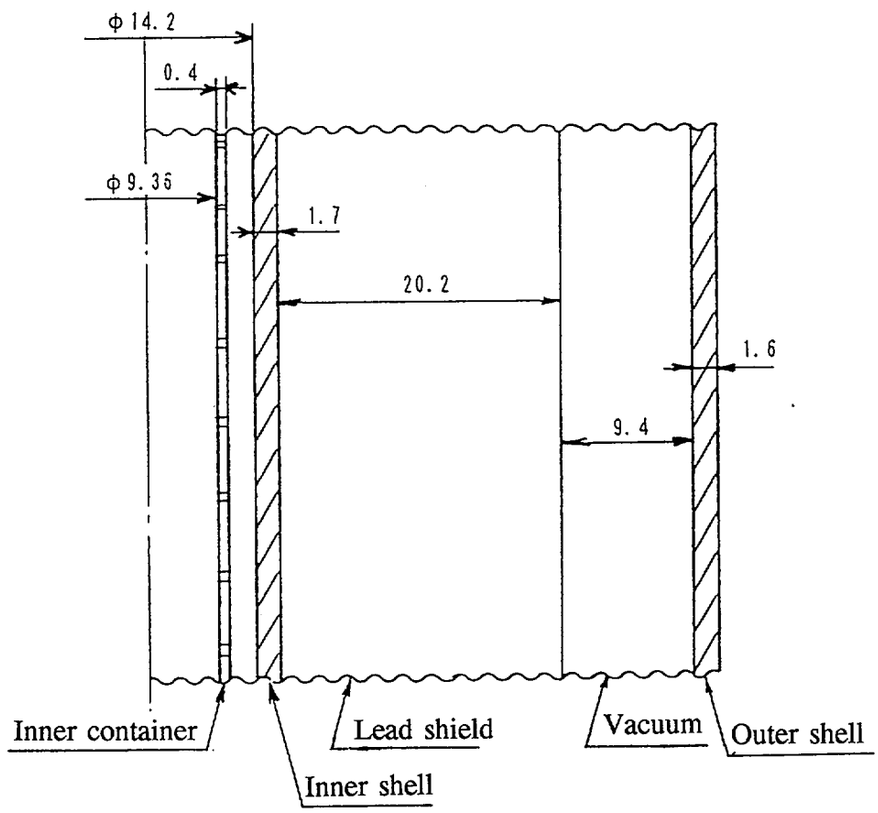

(in cm)

Fig. (II)-D.8 Shield Analytical Model of the Container Side Section under Accident Test Conditions

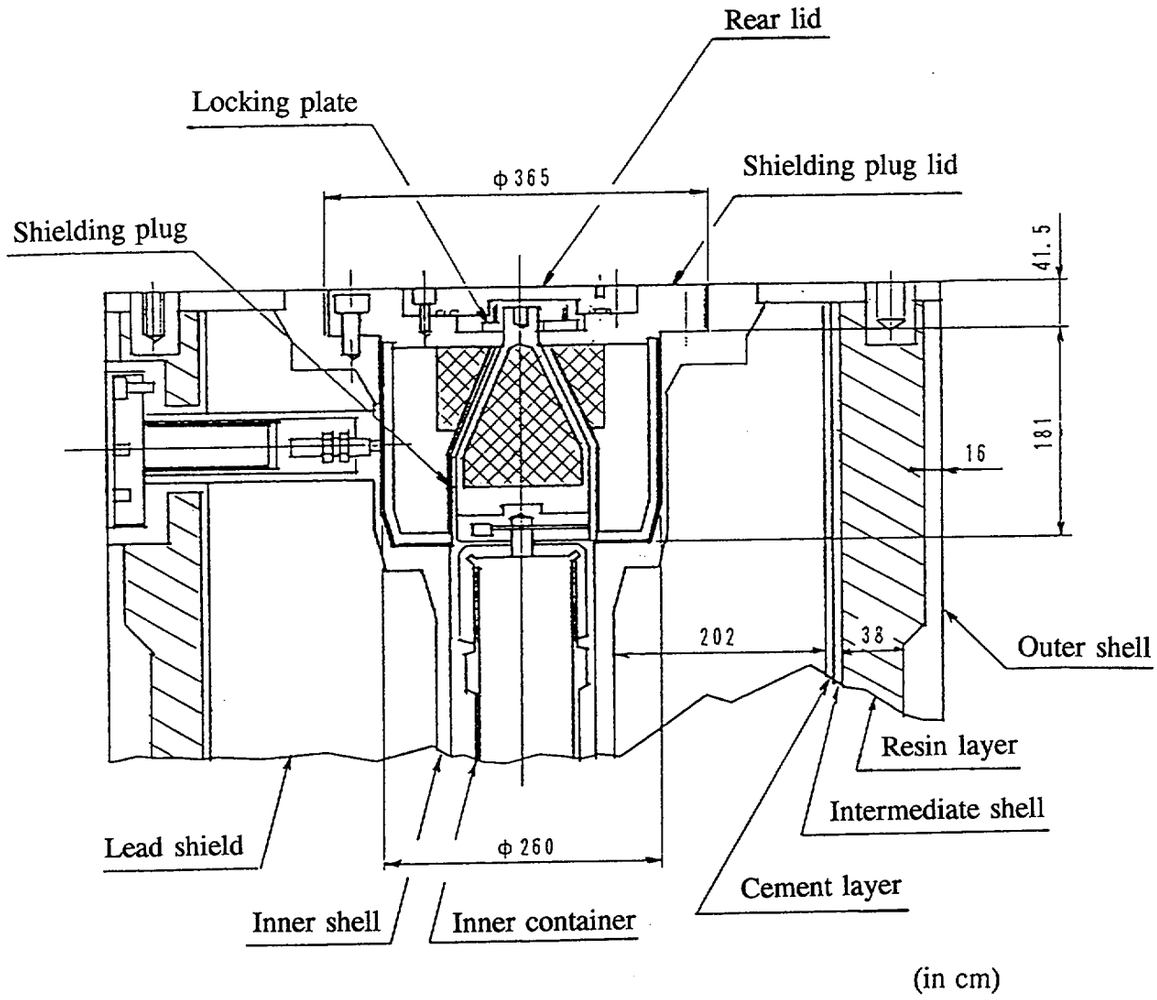

Fig. (II)-D.9 Rear Lid Unit

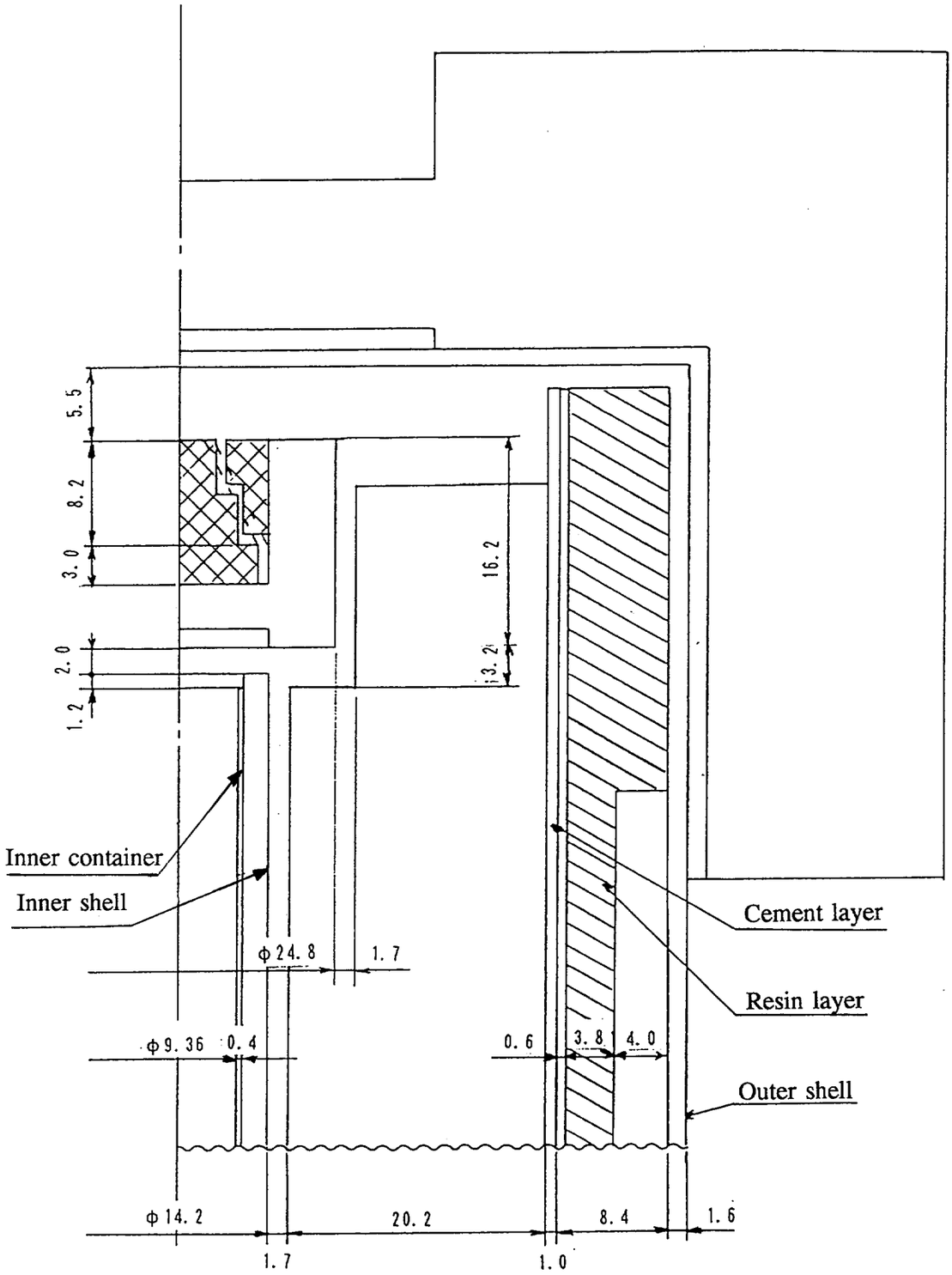

Fig. (II)-D.10 Shield Analytical Model of the Container Rear Section under Normal Test Conditions

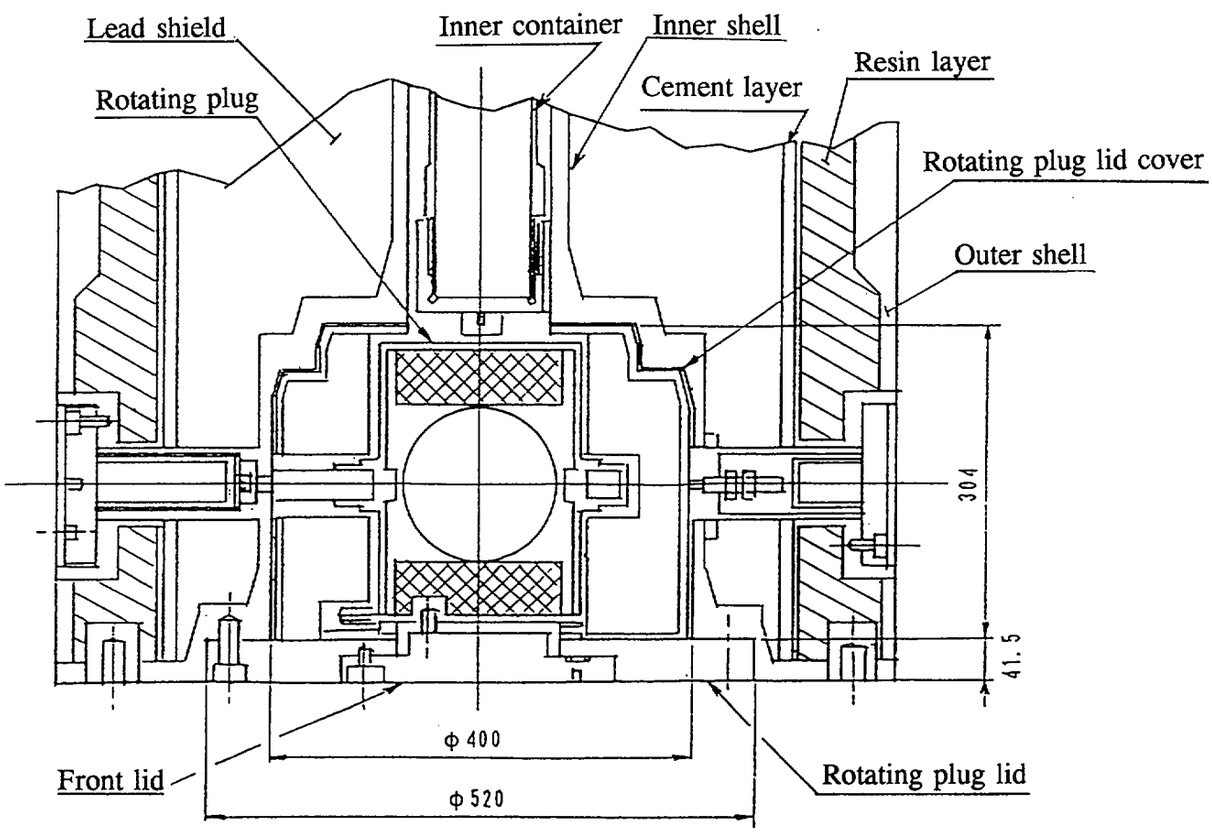

(in cm)

Fig. (II)-D.11 Front Lid Unit

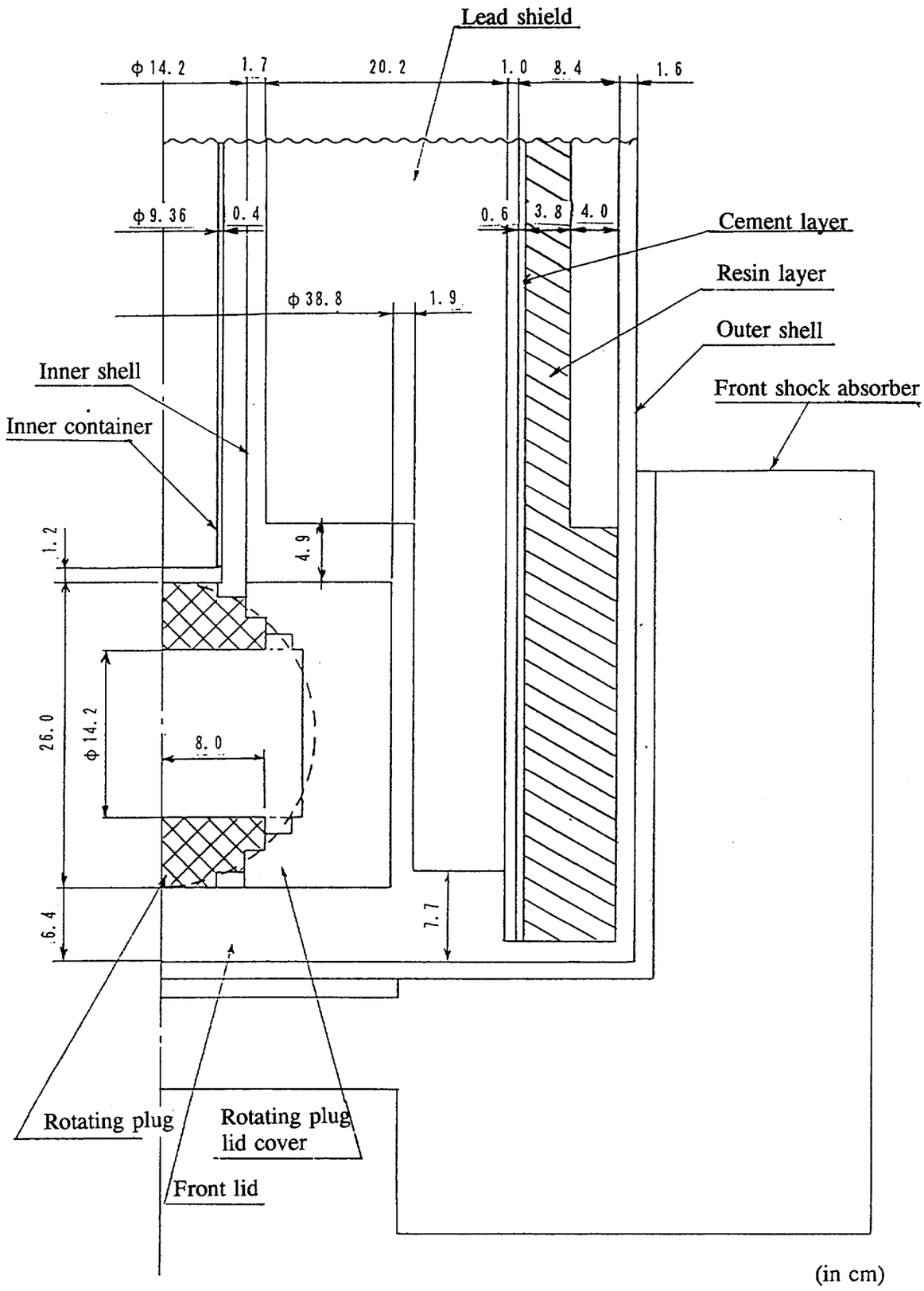

Fig. (II)-D.12 Shield Analytical Model of the Container Front Section Under Normal Test Conditions

(3) Radiation-source models

(3)-1 Contents I

Contents I is irradiated uranium-plutonium mixed oxide fuel. As shown in Fig. (II)-D.13, up to 15 fuel elements are housed in each individual fuel supporting can in a ring-shaped arrangement.

The fissile parts of the fuel pins falling into the category of Contents I are as long as 72 cm. Here, a set of these fissile parts is assumed to be represented by a radiation source shaped like a 72-cm-long pipe, as shown in Fig. (II)-D.14, in which both gamma rays and neutrons generated in the fertile parts are assumed to be uniformly distributed in the fissile parts.

It should be noted that the presence of the accommodated fuel supporting cans is ignored in the gamma-ray analysis.

Contents I, the radiation source, are assumed to be located in a place in which they are most likely to yield the highest dose equivalent rate readings given the locations where dose equivalent rate measurements are to be taken. In other words, if the dose equivalent rates in the radial direction of the packaging body are to be determined, the radiation source is assumed to be located in the middle of the inner container as shown in Fig. (II)-D.15 (a). Likewise, the radiation source is assumed to be accommodated at the front or rear of the inner container cavity if the dose equivalent rates are to be obtained in the front or rear of the container as shown in Figs. (II)-D.15 (b) and D.15 (c), respectively.

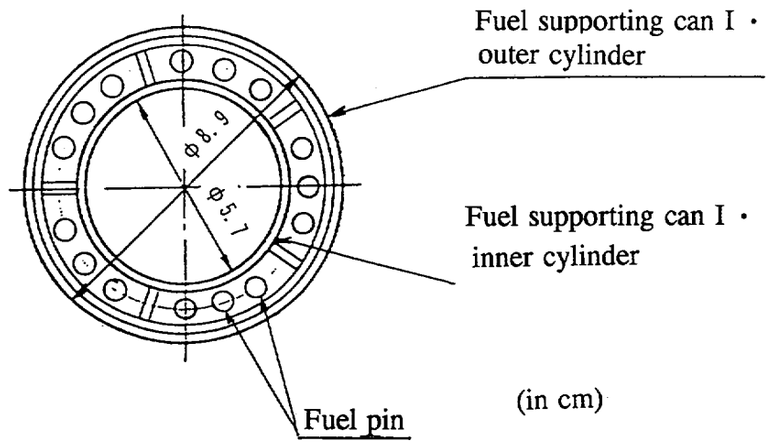

Fig. (II)-D.13 Contents I Loading Conditions

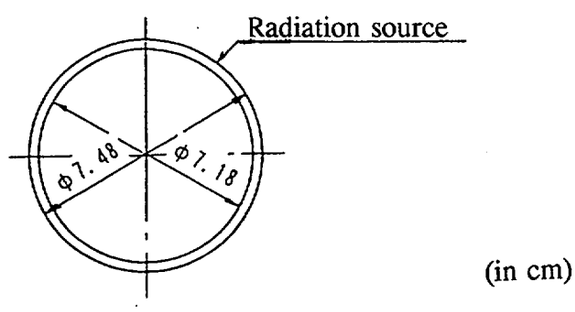

Fig. (II)-D.14 Model of Contents I Loading Conditions

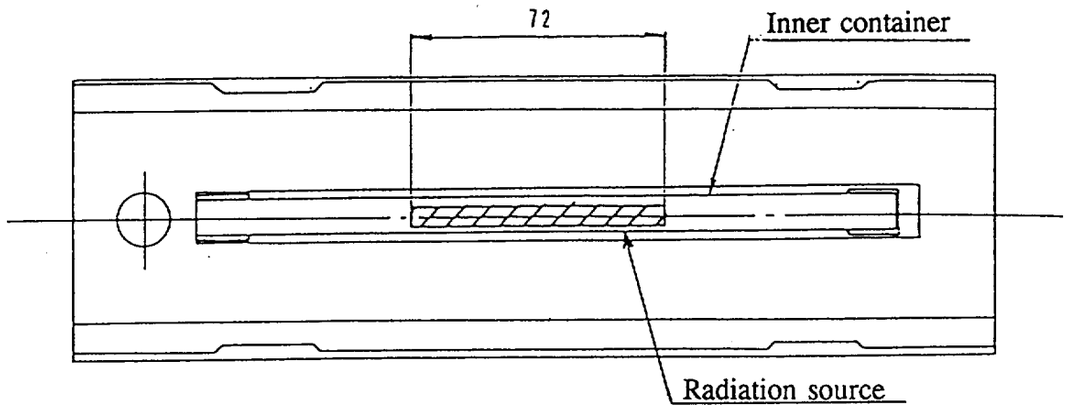

(a) Gamma-ray analysis in the radial direction of the package

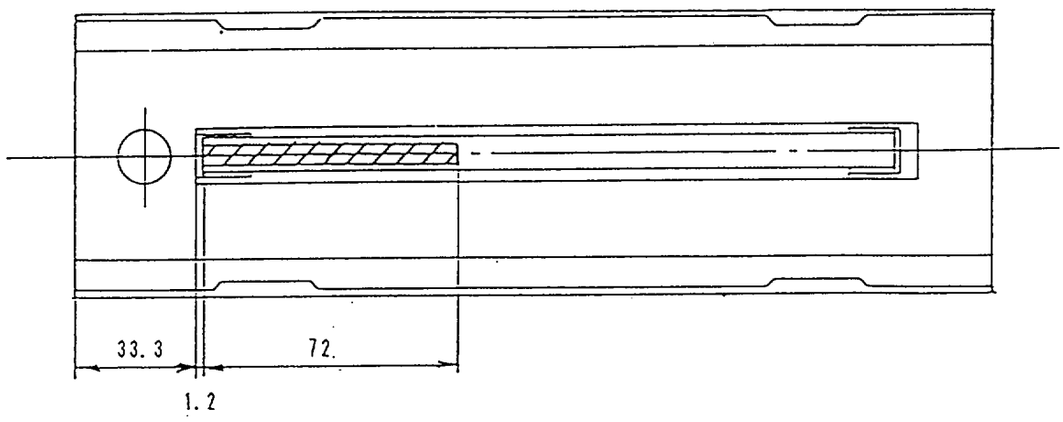

(b) Gamma-ray analysis in the front of the package

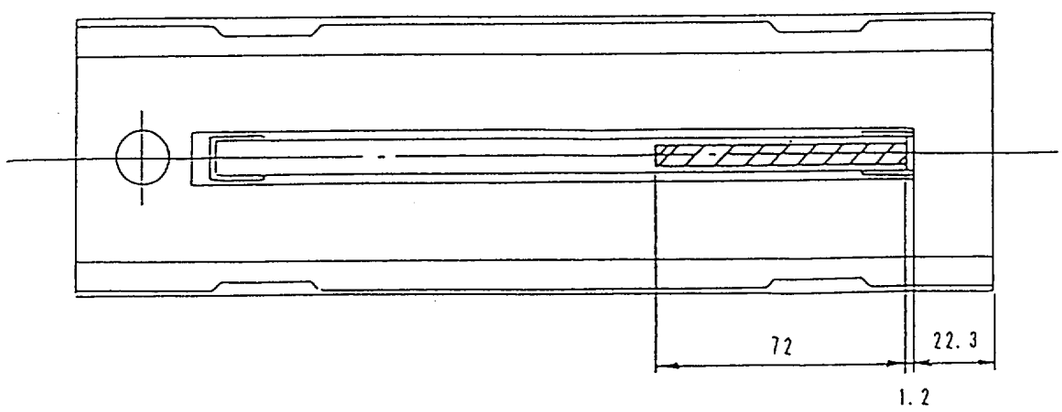

(c) Gamma-ray analysis in the rear of the package

(in cm)

Fig. (II)-D.15 Positions of the Radiation Source of Contents I

(3)-2 Contents II

Like Contents I, Contents II is also irradiated uranium-plutonium mixed oxide fuel. Contents II fuel pins are put into receiving tubes I on a one-on-one basis, and up to six receiving tubes are accommodated onto each rack as shown in Fig. (II)-D.16.

The fissile parts of the fuel pins falling into the category of Contents II are as long as 36 cm. As with Contents I, both the gamma rays and neutrons that are emitted from the fertile parts are assumed to also be uniformly distributed across the fissile parts. In other words, the source of radiation is assumed to have the shape of a pipe measuring 36 cm in length (as shown in Fig. (II)-D.17).

The Contents II radiation source is placed as shown in Fig. (II)-D.18 (a), (b), and (c) by following the same principles as those discussed earlier for Contents I.

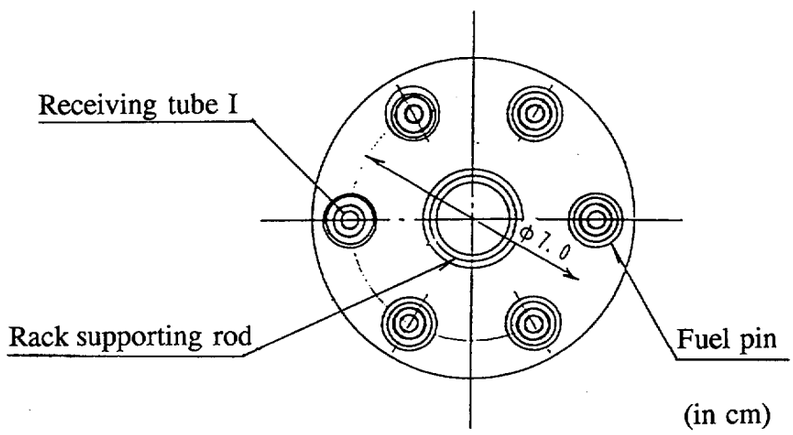

Fig. (II)-D.16 Contents II Loading Conditions

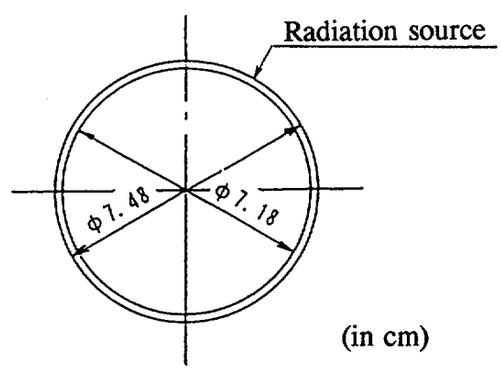

Fig. (II)-D.17 Model of Contents II Loading Conditions

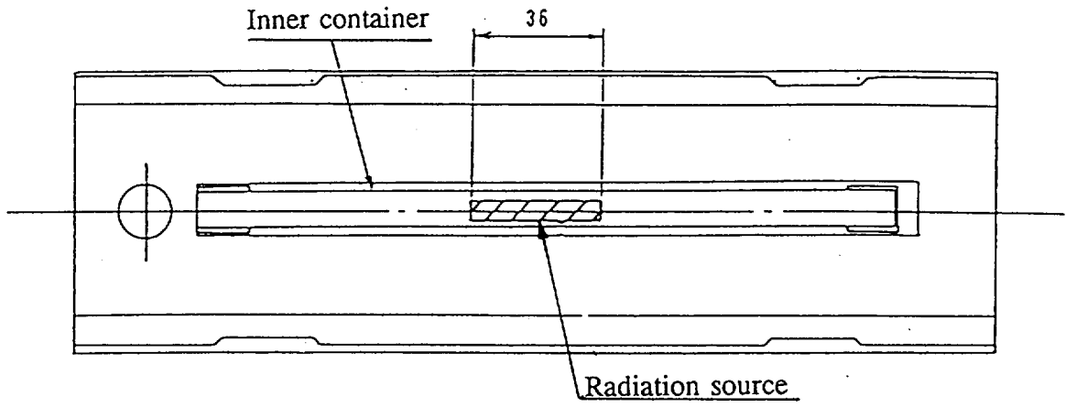

(a) Gamma-ray analysis in the radial direction of the package

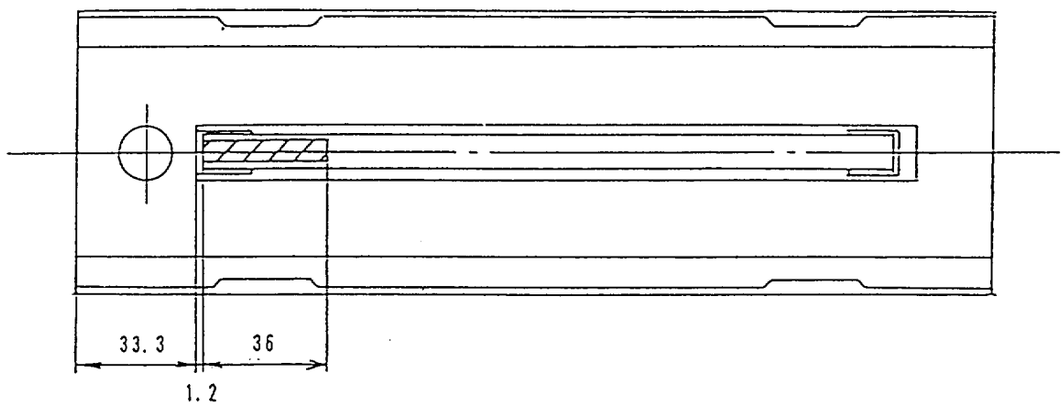

(b) Gamma-ray analysis in the front of the package

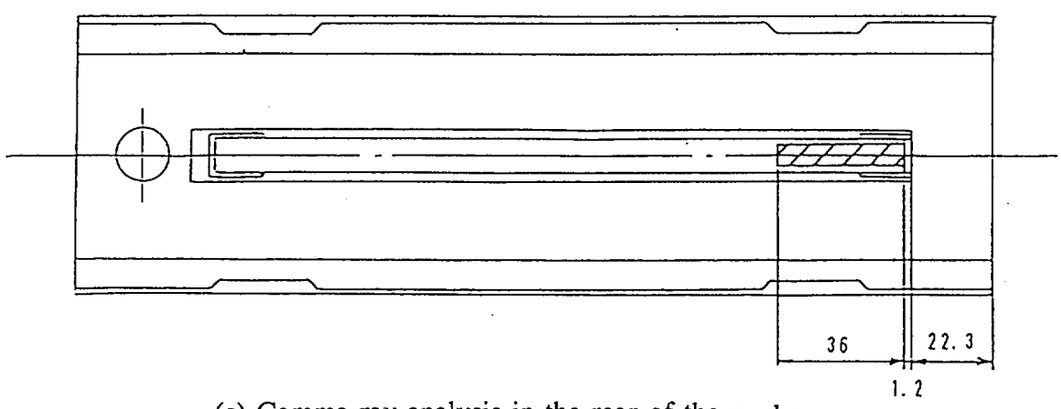

(c) Gamma-ray analysis in the rear of the package

(in cm)

Fig. (II)-D.18 Positions of the Radiations Source of Contents II

(3)-3 Contents III

Contents III is irradiated stainless steel, which has become radioactive. These contents are set in the interior of the inner container.

Since Contents III vary widely in terms of shape, they are assumed to be tightly packed into the shape of a cylinder, whose volume is determined as a function of the weight of the contents that have been squeezed in to facilitate a shield analysis. An analysis model which is used when dose equivalent rates are to be obtained in the radial direction of the packaging itself is shown in Fig. (II)-D.19 (a). Likewise, models employed for measurements at the front or rear of the container are shown in Figs. (II)-D.19 (b) and -D.19 (c), respectively.

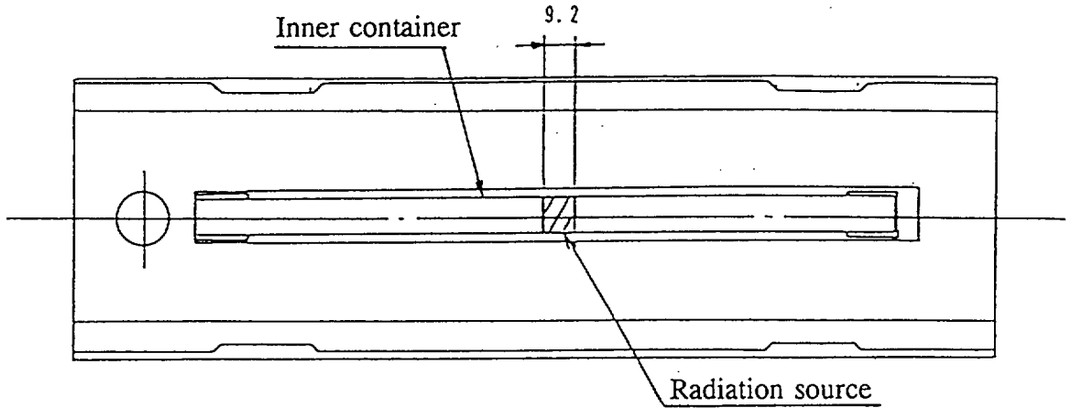

(a) Gamma-ray analysis in the radial direction of the package

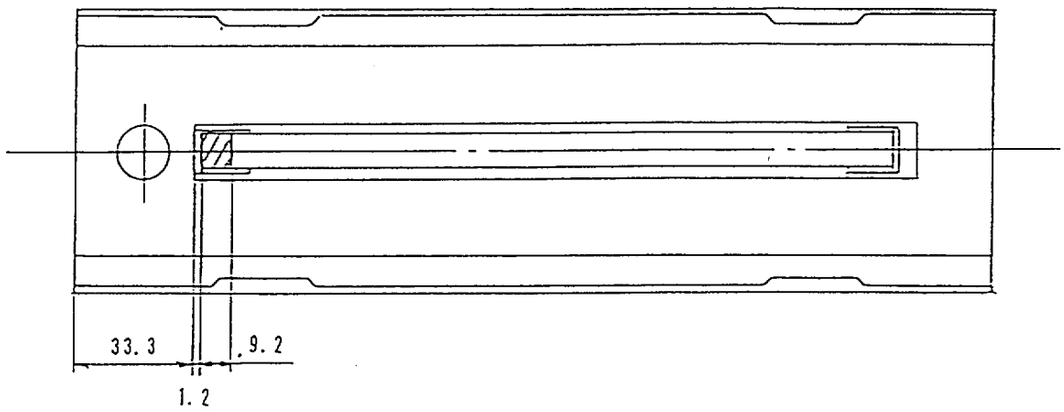

(b) Gamma-ray analysis in the front of the package

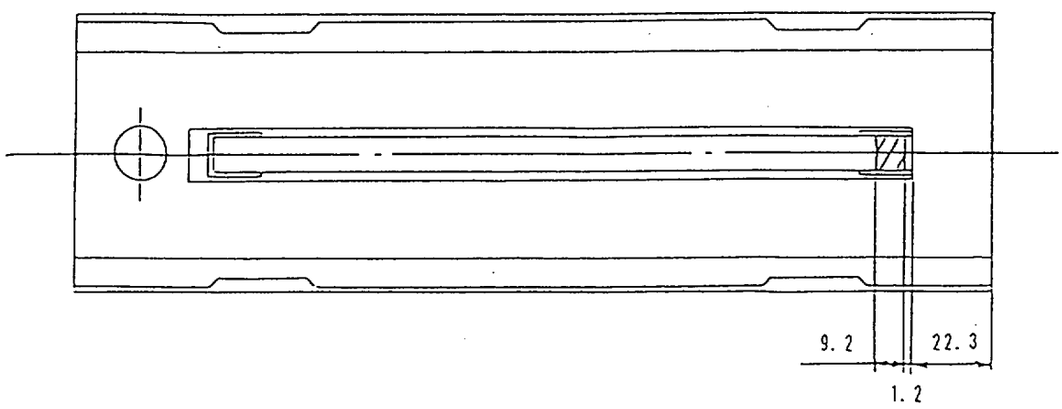

(c) Gamma-ray analysis in the rear of the package

(in cm)

Fig. (II)-D.19 Positions of the Radiation Source of Contents III

D.3.2 Number Density of Atom in Each Individual Analysis-Model Region

The number density of atom in each individual material used in shield calculations is shown in Table (II)-D.14. The density of lead (11.3 g/cm^3) which stands at 95%, is employed here as the density of the lead shields given packing density of the lead in use.

The density of the tungsten alloy (17.8 g/cm^3)used was assumed to be 17.6 g/cm^3 given the dimensional tolerances and other factors. A density of 93% was assumed for the resin layer given the existence of the heat-dispersion fins.

Table (II)-D.14 Number Density of Atom in Each Region of the Shield Analysis Model

Region	Material	Density (g/cm^3)	Number density of atom of the analysis model (10^{24}atoms/cm^3)		Remarks
Void, air	Air	9.3×10^{-4}	N	4.00×10^{-5}	
		2.7×10^{-4}	O	1.00×10^{-5}	
Outer and inner shells, and inner container	SUS	1.42	Cr	1.65×10^{-2}	
		5.85	Fe	6.30×10^{-2}	
		0.632	Ni	6.48×10^{-3}	
Lead shield	Lead	10.74	Pb	3.10×10^{-2}	At the filling-up ratio of 95%
Cement layer	Cement	0.08	H	4.78×10^{-2}	
		1.30	O	4.93×10^{-2}	
		0.397	Al	8.86×10^{-3}	
		0.033	Si	7.14×10^{-4}	
		0.484	Ca	7.28×10^{-3}	
		0.20	Fe	2.15×10^{-3}	
Resin layer	Resin	0.078	H	4.38×10^{-2}	Given the existence of heat dispersion fins, 93% of the values shown left are assumed to represent the density.
		0.00136	^{10}B	7.61×10^{-5}	
		0.604	C	2.81×10^{-2}	
		0.247	O	8.64×10^{-3}	
		0.0542	Al	1.12×10^{-3}	
Rotating plug lid and shielding plug lid	Tungsten	17.6	W	5.76×10^{-2}	

D. 4 Shield Evaluations

(1) Gamma rays

In the gamma-ray shield analysis, radiation in the radial direction of the packaging itself was calculated using the one-dimensional discrete ordinates transport code, ANISN. Meanwhile, the radiation in the front and rear lid units was calculated using the two-dimensional discrete ordinates transport code, DOT3.5.
The cross section obtained from the DLC23/CASK Library under "Gamma rays, Group 18" was used.
The analysis models used in conjunction with the one-dimensional discrete ordinates transport code, ANISN, are shown in Figs. (II)-D.7 and (II)-D.8. Whereas the analysis models used in conjunction with the two-dimensional discrete ordinates transport code, DOT3.5, are shown in Figs. (II)-D.10 and (II)-D.12.
The energy group structure of the depletion code, ORIGEN, the gamma-ray group structure of the DLC23/CASK library, and the gamma-ray radiation-source spectrum in each group structure are also shown in Table (II)-D.15 through Table (II)-D.17.
It should be noted that in handling scattering, P_3S_8 approximations were made for both the one-dimensional discrete ordinates transport code, ANISN, and the two-dimensional discrete ordinates transport code, DOT3.5.
The dose equivalent rate conversion rates adopted were obtained from a notification[1] issued by the Science and Technology Agency. Their values are shown in Table (II)-D.18.
The analysis demonstrated that the maximum gamma-ray dose equivalent rates registered in transport under normal conditions were 173.0 μSv/h (17.3 mrem/h) on the periphery of the packaging, 92.9 μSv/h (9.3 mrem/h) on the rear-end face, and 367.7 μSv/h (36.7 mrem/h) on the front-end face.
The highest gamma-ray dose equivalent rate readings, at 1 meter from the surface of the packaging, were 46.4 μSv/h (4.6 mrem/h) above the periphery of the packaging, 6.0 μSv/h (0.60 mrem/h) above the rear-end face, and 18.7 μSv/h (1.9 mrem/h) above the front-end face.
On the other hand, the maximum gamma-ray dose equivalent rates under normal test conditions were 173.0 μSv/h (17.3 mrem/h) on the periphery of the packaging, 109.5 μSv/h (11.0 mrem/h) on the rear-end face, and 367.7 μSv/h (36.7 mrem/h) on the front-end face.
Under accident test conditions, the highest gamma-ray dose equivalent rate readings, at 1 meter from the surface of the packaging, were 67.4 μSv/h (6.7 mrem/h) above the periphery of the packaging, 57.4 μSv/h (5.7 mrem/h) above the rear-end face, and 206.1 μSv/h (20.6 mrem/h) above the front-end face.
These values took into account the neutron multiplication factors, that had been obtained in the criticality analysis discussed in Section E of this Chapter, as well as the neutron-induced secondary gamma rays.

---

1) Annexed Table 7 attached to Notification No. 16 of the Science and Technology Agency dated May 18, 1988

Table (II)-D.15 Gamma-Ray Energy Group Structure and Gamma-Ray Radiation-source Spectrum (Contents I)

Photon energy MeV	ORIGEN			DLC23	
	Group	ph/s	Rate	Group	ph/s
10.00					
8.00				1	0.00
6.50				2	0.00
5.50				3	0.00
4.00				4	0.00
3.00	8	1.12×10^{9}	1.000	5	1.12×10^{9}
2.60	7	3.65×10^{10}	1.000	6	1.55×10^{11}
2.50	6	4.73×10^{11}	0.250		
2.20			0.750	7	1.66×10^{12}
2.00	5	2.62×10^{12}	0.500		
1.80			0.500	8	2.33×10^{12}
1.66	4	3.29×10^{12}	0.311		
1.35			0.689	9	3.04×10^{12}
1.33	3	1.74×10^{13}	0.044		
1.00			0.733	10	1.28×10^{13}
0.90			0.222	11	1.46×10^{14}
0.80	2	7.11×10^{14}	0.200		
0.60			0.400	12	2.84×10^{14}
0.40			0.400	13	2.84×10^{14}
0.30	1	9.54×10^{13}	1.000	14	9.54×10^{13}
0.20				15	0.00
0.10				16	0.00
0.05				17	0.00
0.01				18	0.00
Total	8.30×10^{14}			8.30×10^{14}	

Table (II)-D.16 Gamma-Ray Energy Group Structure and Gamma-Ray Radiation-source Spectrum (Contents II)

Photon energy MeV	ORIGEN			DLC23	
	Group	ph/s	Rate	Group	ph/s
10.00					
8.00				1	0.00
6.50				2	0.00
5.50				3	0.00
4.00				4	0.00
3.00	8	3.21×10^{8}	1.000	5	3.21×10^{8}
2.60	7	1.01×10^{10}	1.000	6	4.31×10^{10}
2.50	6	1.32×10^{11}	0.250		
2.20			0.750	7	4.55×10^{11}
2.00	5	7.12×10^{11}	0.500		
1.80			0.500	8	6.67×10^{11}
1.66	4	1.00×10^{12}	0.311		
1.35			0.689	9	9.11×10^{11}
1.33	3	4.99×10^{12}	0.044		
1.00			0.733	10	3.66×10^{12}
0.90			0.222	11	3.41×10^{13}
0.80	2	1.65×10^{14}	0.200		
0.60			0.400	12	6.60×10^{13}
0.40			0.400	13	6.60×10^{13}
0.30	1	2.56×10^{13}	1.000	14	2.56×10^{13}
0.20				15	0.00
0.10				16	0.00
0.05				17	0.00
0.01				18	0.00
Total	1.97×10^{14}			1.97×10^{14}	

Table (II)-D.17 Gamma-Ray Energy Group Structure and Gamma-Ray Radiation-source Spectrum (Contents III)

Photon energy MeV	ORIGEN			DLC23	
	Group	ph/s	Rate	Group	ph/s
10.00					
8.00				1	0.00
6.50				2	0.00
5.50				3	0.00
4.00				4	0.00
3.00				5	0.00
2.60				6	0.00
2.50					
2.20					
2.00	5	3.06	0.500	7	1.53
1.80			0.500	8	5.20×10^{10}
1.66	4	1.67×10^{11}	0.311		
1.35			0.689	9	3.01×10^{11}
1.33	3	4.19×10^{12}	0.044		
1.00			0.733	10	3.07×10^{12}
0.90			0.222	11	2.63×10^{13}
0.80	2	1.27×10^{14}	0.200		
0.60			0.400	12	5.08×10^{13}
0.40			0.400	13	5.08×10^{13}
0.30	1	4.21×10^{9}	1.000	14	4.21×10^{9}
0.20				15	0.00
0.10				16	0.00
0.05				17	0.00
0.01				18	0.00
Total	1.31×10^{14}			1.31×10^{14}	

(2) Neutrons

As in the foregoing gamma-ray shield analysis, the one-dimensional discrete ordinates transport code, ANISN, and the two-dimensional discrete ordinates transport code, DOT3.5, were also used to calculate the radiation in the neutron shield analysis: the former to calculate radiation in the radial direction of the packaging itself and the latter to calculate radiation in the front and rear lid units.
As the cross section, the one obtained from the DLC23/CASK Library under "Neutron, Group 22" and "Gamma rays, Group 18" was used.
The analysis models used in conjunction with the one-dimensional discrete ordinates transport code, ANISN, are shown in Figs. (II)-D.7 and (II)-D.8. The analysis models used in conjunction with the two-dimensional discrete ordinates transport code, DOT3.5, are shown in Figs. (II)-D.10 and (II)-D.12.
The neutron-group structure of the DLC23/CASK library, and the nuclear fission spectra of the group structure are also shown in Table (II)-D.18.
It should be noted that in the handling of scattering, P_3S_8 approximations were made for both the one-dimensional discrete ordinates transport code, ANISN, and the two-dimensional discrete ordinates transport code, DOT3.5.
The dose equivalent rate conversion rates adopted were obtained from a notification[1] issued by the Science and Technology Agency. Their values are shown in Table (II)-D.18.
The analysis demonstrated that the maximum neutron dose equivalent rates under normal transport conditions were 139.8 μSv/h (14.0 mrem/h) on the periphery of the packaging, 134.4 μSv/h (13.4 mrem/h) on the rear-end face, and 111.3 μSv/h (11.1 mrem/h) on the front-end face.
Whereas, the highest neutron dose equivalent rate readings at 1 meter from the packaging were 19.3 μSv/h (1.9 mrem/h) above the periphery of the packaging, 13.1 μSv/h (1.3 mrem/hr) above the rear-end face, and 9.2 μSv/h (0.92 mrem/h) above the front-end face.

On the other hand, the maximum neutron dose equivalent rates under normal test conditions were 139.8 μSv/h (14.0 mrem/h) on the periphery of the packaging, 134.4 μSv/h (13.4 mrem/h) on the rear-end face, and 111.3 μSv/h (11.1 mrem/h) on the front-end face.
Under accident test conditions, the highest neutron dose equivalent rate readings at 1 meter from the packaging were 183.7 μSv/h (18.4 mrem/h) above the periphery of the packaging, 28.3 μSv/h (2.8 mrem/h) above the rear-end face, and 20.0 μSv/h (2.0 mrem/h) above the front-end face.
These values took into account the neutron multiplication factors that had been obtained in the criticality analysis discussed in Section E of this Chapter.

---

1) Annexed Table 8 attached to Notification No. 16 of the Science and Technology Agency dated May 18, 1988

Table (II)-D.18 DLC23 Neutron Group Structure, Nuclear Fission Spectrum, and Dose Equivalent Rate Conversion factor

Group	Maximum value for neutron energy eV	Nuclear fission spectrum	Conversion factor $\frac{\mu Sv/h}{n/s/cm^2}$
1	1.492×10^{7}	1.89×10^{-4}	1.8214
2	1.220×10^{7}	1.01×10^{-3}	1.6642
3	1.000×10^{7}	3.82×10^{-3}	1.5498
4	8.180×10^{6}	1.49×10^{-2}	1.4520
5	6.360×10^{6}	3.54×10^{-2}	1.3728
6	4.960×10^{6}	4.88×10^{-2}	1.4172
7	4.010×10^{6}	1.07×10^{-1}	1.4196
8	3.010×10^{6}	8.90×10^{-2}	1.3426
9	2.460×10^{6}	2.13×10^{-2}	1.3120
10	2.350×10^{6}	1.18×10^{-1}	1.2817
11	1.830×10^{6}	2.15×10^{-1}	1.2811
12	1.100×10^{6}	1.96×10^{-1}	1.1262
13	5.500×10^{5}	1.34×10^{-1}	6.8263×10^{-1}
14	1.110×10^{5}	1.58×10^{-2}	9.2014×10^{-2}
15	3.350×10^{3}		2.3837×10^{-2}
16	5.830×10^{2}		2.4271×10^{-2}
17	1.010×10^{2}		2.7411×10^{-2}
18	2.900×10^{1}		3.1092×10^{-2}
19	1.010×10^{1}		3.4753×10^{-2}
20	3.060		3.8265×10^{-2}
21	1.120		3.9796×10^{-2}
22	4.140×10^{-1}		3.2181×10^{-2}
	1.000×10^{-3}		

Group	Maximum value for photon energy MeV	Conversion factor $\frac{\mu Sv/h}{n/s/cm^2}$
1	1.000×10^{1}	8.3580×10^{-2}
2	8.000	7.1304×10^{-2}
3	6.500	6.0856×10^{-2}
4	5.000	5.1708×10^{-2}
5	4.000	4.3990×10^{-2}
6	3.000	3.7705×10^{-2}
7	2.500	3.2996×10^{-2}
8	2.000	2.8662×10^{-2}
9	1.660	2.4813×10^{-2}
10	1.330	2.0609×10^{-2}
11	1.000	1.6935×10^{-2}
12	8.000×10^{-1}	1.3819×10^{-2}
13	6.000×10^{-1}	1.0390×10^{-2}
14	4.000×10^{-1}	7.5444×10^{-3}
15	3.000×10^{-1}	5.3778×10^{-3}
16	2.000×10^{-1}	3.2154×10^{-3}
17	1.000×10^{-1}	1.9409×10^{-3}
18	5.000×10^{-2}	2.5052×10^{-3}

(3) Margin of safety

In this analysis, the following margins of safety were considered.

(3)-1 Margin of safety concerning radiation sources

In the analysis, since the specific output was overrated in the course of the radiation-source evaluation and burnup was assumed to be continuous, the buildup of short-half-life nuclides was overestimated. Counted among these nuclides is ^{144}Ce, a fertile nuclear species of ^{144}Pr which is a principal gamma-ray-emitting nuclide. Transuranic elements, which are sources of neutrons, are created through the processes of neutron capture and β decay. Since the half-lives of Pu and Am isotopes that undergo β decay are far longer than the operation period of a given nuclear reactor, the amount of transuranic elements that are created is a function of the burnup, although it is little influenced by the history of irradiation. However, since the half-life of ^{242}Cm, which is a principal neutron-emitting nuclide, stands at a mere 163 days, the following relationship holds: the shorter the burn-up period, the smaller the magnitude of disintegration.

Since a nuclear reactor is actually operated only intermittently, the time required to reach a given burnup is longer than the estimated time. For this reason, the neutron-emitting ability of nuclides is also overestimated. What's more, effective multiplication factors are considered when neutron-intensity calculations are made.

For the reasons stated above, evaluations on radiation-source calculations are performed on the safe side.

(3)-2 Margin of safety concerning analysis models

In the gamma-ray shield analysis, the density of lead, which is a principal shielding material, was assumed to be 95%. In addition, although Contents I and II also serve as shielding materials, their shielding effect was ignored in the analysis.

In the neutron shield analysis, the shielding effects of the shock-absorbing materials were ignored in the modeling of the front and rear sections. This also represents another underestimation that pushes dose equivalent rates even further toward the safe side.

D.5 Summary and Evaluation of Results

The highest dose equivalent rates obtained on and around the package accommodating specific contents under various different specified test conditions are shown Table (II)-D.19.

As is evident from the table, the obtained dose equivalent rates satisfy all the criteria.

It should be noted that the location of the radiation source was chosen so that the highest possible reading could be produced at each measurement point. In other words, the radiation source was assumed to be sitting in the middle of the inner container when dose equivalent rates were obtained for radiation in the radial direction of the packaging. In the same way, the radiation source was assumed to be located in the front or rear sections of the inner container cavity when dose equivalent rates were obtained for the front or rear of the container.

The distribution of dose equivalent rates obtained on and around the package holding specific contents is shown in Figs. (II)-D.20 through (II)-D.22.

As can be understood from these figures, the rate of increase of on-surface dose equivalent rates reached its peak on the periphery of the rear section of the package holding Contents I.

The total dose equivalent rate under normal transport conditions stood at:

Gamma rays	:	3.8 μSv/h
Neutrons	:	8.9 μSv/h
Total	:	12.7 μSv/h

The total dose equivalent rate under normal test conditions stood at:

Gamma rays	:	4.4 μSv/h
Neutrons	:	10.7 μSv/h
Total	:	15.1 μSv/h

The ratio between the above two total dose equivalent rates was:

$$\frac{15.1}{12.7} = 1.189$$

The rate of increase was, therefore, 18.9%.

On the basis of the above, it can be concluded that the rate of increase was smaller than 20%, and that there were no considerable increases in the dose equivalent rate.

Table (II)-D.19 The Maximum Dose Equivalent Rates under Different Conditions

Condition	Contents		The maximum dose equivalent rate (μSv/h)					
			On package surfaces			At 1 m from package surface		
			Side	Rear	Front	Side	Rear	Front
During normal transport	Contents I	Primary γ-ray	170.1	63.3	364.9	45.8	2.8	18.5
		Secondary γ-ray	2.9	2.3	2.8	0.6	0.4	0.2
		Neutron	83.0	134.4	80.8	19.3	13.1	5.8
		Total	256.0	200.0	448.5	65.7	16.3	24.5
	Contents II	Primary γ-ray	95.9	55.3	191.7	25.8	2.8	9.7
		Secondary γ-ray	1.2	1.3	0.8	0.2	0.2	0.1
		Neutron	43.2	40.5	37.5	10.0	5.9	2.7
		Total	140.3	97.1	230.0	36.0	8.9	12.5
	Contents III	γ-ray	8.7	11.4	33.3	2.5	2.2	5.2
	Criteria		2000			100		
Normal test conditions	Contents I	Primary γ-ray	170.1	105.7	364.9	-		
		Secondary γ-ray	2.9	3.8	2.8			
		Neutron	83.0	108.6	80.8			
		Total	256.0	218.8	448.5			
	Contents II	Primary γ-ray	95.9	65.2	191.7	-		
		Secondary γ-ray	1.2	1.5	0.8			
		Neutron	43.2	48.4	37.5			
		Total	140.3	115.1	230.0			
	Contents III	γ-ray	8.7	13.4	33.3			
	Criteria		2000			-		
Accident test conditions	Contents I	Primary γ-ray	-			67.3	57.4	206.1
		Secondary γ-ray				0.1	0.0	0.0
		Neutron				183.7	20.4	16.2
		Total				251.1	77.8	222.3
	Contents II	Primary γ-ray	-			37.8	39.0	107.5
		Secondary γ-ray				0.1	0.0	0.0
		Neutron				95.5	8.7	7.2
		Total				133.4	47.7	114.7
	Contents III	γ-ray	-			7.3	9.9	23.1
	Criteria		-			10000		

Front Part (Rotating plug side) Rear Part (Shielding plug side)

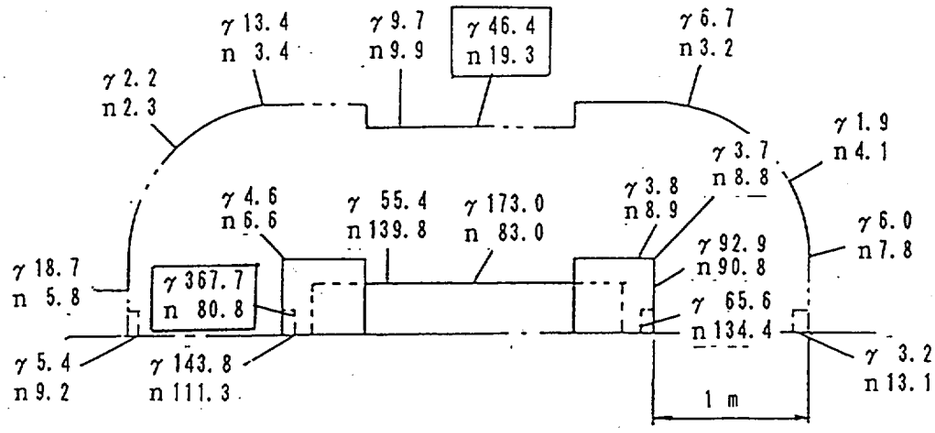

Normal transport conditions

Indicates the maximum increasing rate of the dose equivalent rates

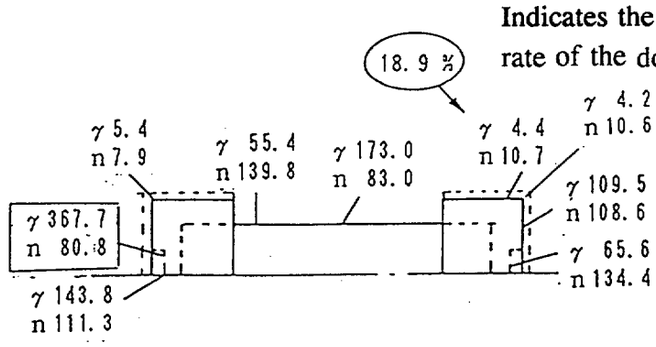

Under normal test conditions

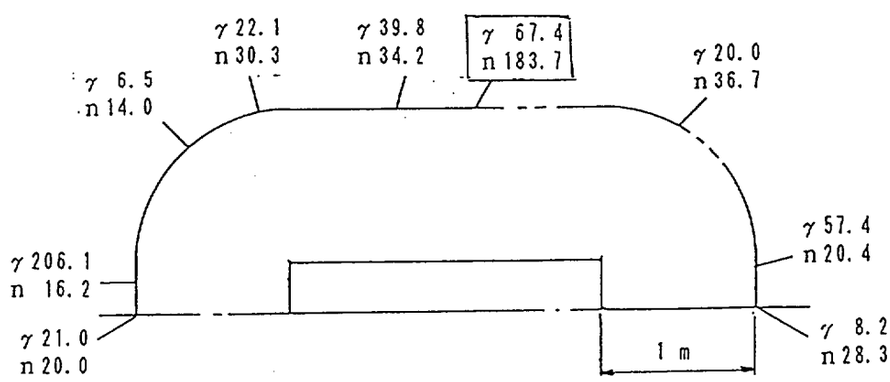

(unit: μSv/h)

Under accident test conditions

The maximum values are enclosed in [ ].

Fig. (II)-D.20 Distribution of the Dose Equivalent Rates on and around the Package Holding Contents I

Front Part (Rotating plug side) Rear Part (Shielding plug side)

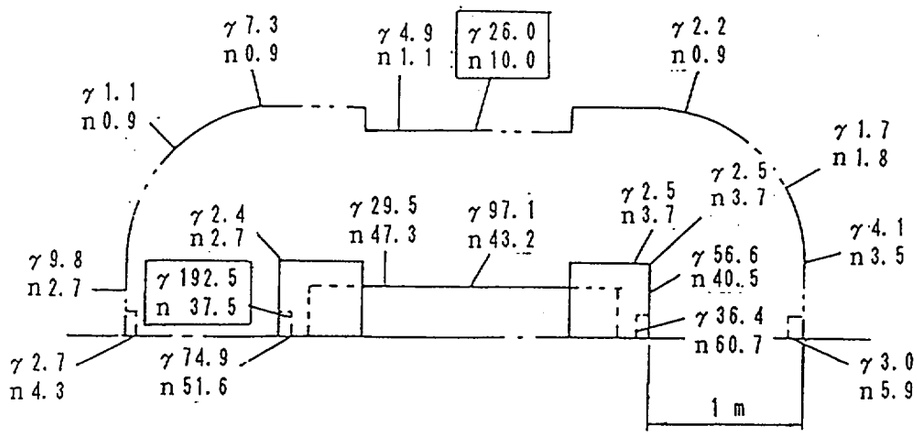

Normal transport conditions

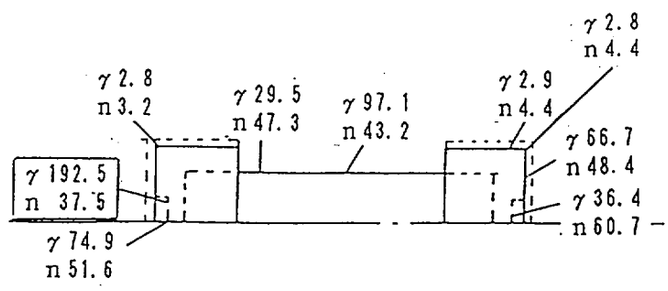

Under normal test conditions

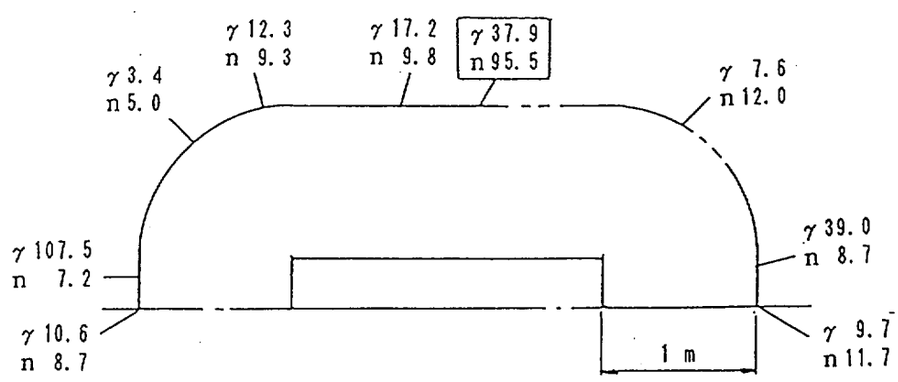

(unit: μSv/h)

Under accident test conditions

The maximum values are enclosed in [ ].

Fig. (II)-D.21 Distribution of the Dose Equivalent Rates on and around the Package Holding Contents II

Front Part (Rotating plug side) Rear Part (Shielding plug side)

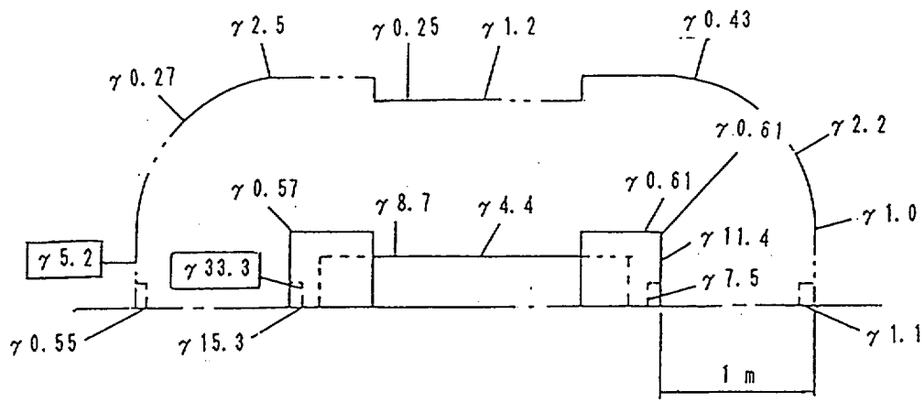

Normal transport conditions

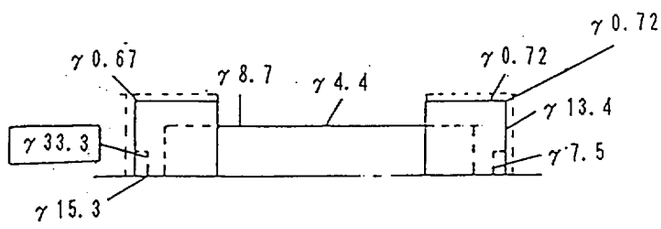

Under normal test conditions

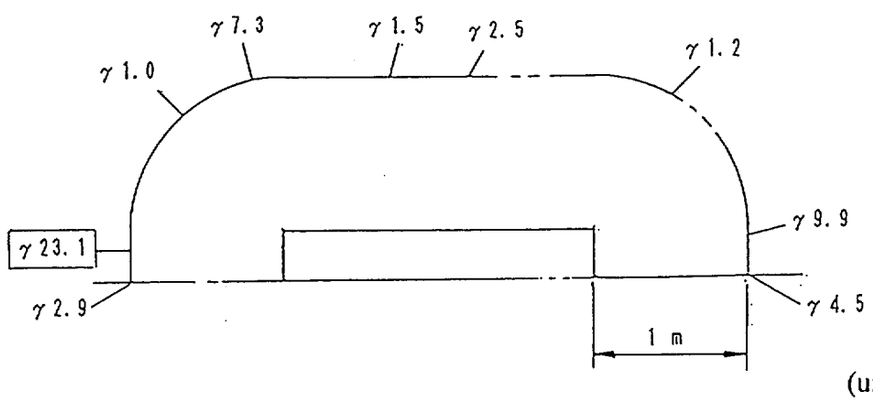

(unit: μSv/h)

Under accident test conditions

The maximum values are enclosed in [ ].

Fig. (II)-D.22 Distribution of the Dose Equivalent Rates on and around the Package Holding Contents III

(II)-E Criticality Analysis

The objective of the criticality analysis is to show that the package, which is designed to accommodate fissile materials, holding specific contents remains within the bounds of subcriticality.

E.1 Outline

This analysis shows that criticality will not be reached even if an arbitrary number of the package may be loaded onto a vehicle/vessel in whatever arrangement. In performing the criticality analysis, all packages, regardless of whether they are damaged or not, are assumed to be without shock absorbers, meaning that the analysis is conducted on the package bodies alone. Since this constitutes the most favorable analysis condition to be on the safe side, the criticality analysis is carried out under these conditions only as will be discussed later on.

To conduct the criticality analysis, both damaged and undamaged packages are represented by a common model. This is based on the outcome of the structural evaluation run in Section A of this chapter (II), which points to the fact that the geometric (shape) conditions of the package itself remain unchanged even after it has been subjected to, under both normal and accident test conditions, an assortment of tests (a test set consisting of water spray testing, 0.3-m free drop onto a corner or onto each of the quaters of each rim testing, 0.6-m free drop testing, stack testing, penetration testing, 9-m free drop testing, Drop Test II, thermal testing and 0.9-m water immersion testing, or a set of tests consisting of water spray testing, 0.3-m free drop onto a corner or onto each of the quaters of each rim testing, 0.6-m free drop testing, stack testing, penetration testing, and 15-m water immersion testing).

The water content of the resin layer is believed to vary in the course of the thermal test which is carried out under accident test conditions. Therefore, the water contained in the resin layer is assumed to be replaced with water that is distributed optimally in favor of nuclear fission under both normal and accident test conditions. Consequently, the same material-related conditions were used under both normal and accident test conditions.

Materials to be placed into the packaging include irradiated uranium-plutonium mixed oxide fuel and irradiated structural materials. Since these contents are intended for use in irradiation experiments and, therefore, vary widely in variety, all conceivable contents have been evaluated and classified under the following seven headings (Contents I, II, IV, V, VI, VII, and VIII) as shown in (I)-5. A criticality analysis is conducted on these contents according to their specifications. It should be noted that they are not subject to a criticality analysis, since Contents III do not contain fissionable materials.

These seven types of contents are accommodated as follows: Contents I, IV and V are put into fuel supporting cans I; Contents II into racks; Contents VI and VIII into supporting cans; and Contents VII into fuel supporting cans II. Although these contents, or fuel pins, are accommodated in similar arrangements, Contents I are most likely to become critical because of their tight spacing, which is the smallest among all seven kinds. Moreover, Contents I contain more fissionable materials than any other contents. For these reasons, Contents I represent the most intractable contents in terms of performance of the criticality analysis among the Contents I, II, and IV to VIII. Carrying out a criticality analysis by adjusting the spacing of Contents I fuel pins obviates the need to conduct an analysis on all the other contents.

In the criticality analysis of Contents I, although fuel supporting can I is designed to accommodate up to 15 fuel pins in actuality and its structure includes dividers to prevent three or more pins from grouping together in one place. However, a fuel-pin arrangement which is conducive to the highest degree of reaction was assumed in conducting the criticality analysis. In other words, fuel pins were assumed to be accommodated in close proximity to one another. To be more specific, the accommodation of a total of approximately 33 fuel pins, more than twice the actual maximum holding capacity of 15 pins, was assumed.

The effective multiplication factor k_{eff} for application to packages that are loaded in isolation, as well as the infinite multiplication factor $k\infty$ for application to arrays of packages, were obtained by calculation through the use of the Monte Carlo calculation code, KENO[1].

Each analysis model consisted of a contents-storage region, water, an outer shell, an inner shell, and lead. The stainless steel, the resin layer, and the cement layer were all replaced with water. Furthermore, the contents-storage region was modeled by replacing it with a homogeneous mixture of uranium-plutonium mixed oxide fuel and water to conduct the simulation.

Moreover, packages in isolation were assumed to be surrounded by a hydrogenous reflector with a sufficient thickness all around. Under total immersion in water, $k_{eff} = 0.75$ (with 3σ taken into consideration) was obtained.

Whereas $k\infty = 0.76$ (with 3σ taken into consideration) was obtained for arrays of packages when an infinite number of packages in intimate contact with one another are fully immersed in water.

The results of the criticality analysis verified that the package never becomes critical irrespective of the number of the packages or arrangement they adopt.

---

1) L.M. Petrie, N. F. Landors: KENO-V An Improved Monte Carlo Criticality Program with supergrouping, NUREG/CR-0200

E.2 Items Subject to Analysis

E.2.1 Contents

The criticality-related specifications of the individual Contents as well as the contents specifications that were used for the analysis are shown in Table (II)-E.1.

As for the contents that were used for the analysis, a space of approximately 33 fuel pins (more than double the usual quantity of 15 pins) was assumed to be uniformly filled with 44-pinfuls of mixed oxide fuel considering the mutual proximity and uneven distribution of Contents I (15 fuel pins) which has the maximum fissile content. Furthermore, the fissile-part length adopted was borrowed from that of Contents VI and VII, both of which featured the greatest fissile-part length. In addition, the composition of Pu isotopes was selected to favor reaction.

Furthermore, although actual contents will have been irradiated to high degrees of burnup, the contents adopted for the analysis were assumed to be yet-to-be-irradiated contents to set up a hypothesis that would be on the safe side.

As shown in Table (II)-E.1, the quantity was assumed to be approximately 33 pins, more than twice the actual maximum number of fuel pins accommodated.

In other words, the contents adopted for the analysis measured 140 cm in fissile-part length and weighed 11,453 g, of which the fissile part weighed 9,565 g (breakdown: 6,747 g for ^{235}U, 2,505 g for ^{239}Pu, and 313 g for ^{241}Pu). On the basis of this hypothesis, the analysis proved that there is a sufficient margin of safety.

E.2.2 Packaging

Designed to protect its contents-holding inner container, the packaging features a multiple-cylinder construction, made up of, as seen from the innermost layer, a stainless-steel inner shell, shielding layers, and a stainless-steel outer shell which makes the entire package rigid. The shielding layers are the inner lead shield responsible for shielding gamma rays and the outer resin layer responsible for blocking neutrons. Although the rear section of the inner shell is open to permit the loading or retrieval of contents, it is hermetically sealed with a lid during transport. With the lid secured in place, the package is equipped with shock absorbers on its ends so that the package can withstand the impact resulting from possible drops.

The structural evaluation results indicate that the package itself is not deformed in the free drop testing conducted under normal test conditions or in Drop Test I performed under accident test conditions since the impacts caused by the drops are absorbed by the shock absorbers mounted on the ends of the package. Furthermore, there is no penetration (perforation) of the outer shell of the package during the course of Drop Test II performed under accident test conditions. In addition, the inner container along with the housed fuel supporting cans, rack, or supporting cans that hold the contents, do not become deformed by the impacts caused by drops. For these reasons, the same shape-related (geometric, dimensional) conditions apply to the package body under both Drop Test I and II test conditions.

E.2.3 Neutron Absorber

Although a resin layer is actually used as a neutron shield in the package, this resin layer was replaced by water for the analysis. Since water is a substance which outperforms resin in terms of both moderation power and ratio, replacing the resin with water puts the hypothesis further on the safe side.

Table (II)-E.1 Specifications of Contents

(No. 1)

Item	Contents I	Contents II	Contents IV	Contents V
(Fuel)				
Material	PuO_2-UO_2	PuO_2-UO_2	PuO_2-UO_2	PuO_2-UO_2
Mass of oxide mixtures	2,160g or less	432g or less	1,960g or less	1,960g or less
Mass of ^{235}U	1,197g or less	273g or less	1,113g or less	327g or less
Mass of Pu-fissile	428g or less	57g or less	388g or less	233g or less
Uranium enrichment	90W/o or less	90W/o or less	90W/o or less	23W/o or less
PuO_2 enrichment	31W/o or less	21W/o or less	31W/o or less	18W/o or less
Composition of Pu isotopes				
^{238}Pu	1.18g or less (0.2W/o or less)	0.16g or less (0.2W/o or less)	0.73g or less (0.2W/o or less)	0.62g or less (0.2W/o or less)
^{239}Pu	472.47g or less (80.0W/o or less)	64.01g or less (80.0W/o or less)	290.42g or less (80.0W/o or less)	248.94g or less (80.0W/o or less)
^{240}Pu	147.65g or less (25.0W/o or less)	20.00g or less (25.0W/o or less)	90.76g or less (25.0W/o or less)	77.79g or less (25.0W/o or less)
^{241}Pu	59.06g or less (10.0W/o or less)	8.00g or less (10.0W/o or less)	36.30g or less (10.0W/o or less)	31.12g or less (10.0W/o or less)
^{242}Pu	29.53g or less (5.0 W/o or less)	4.00g or less (5.0 W/o or less)	18.15g or less (5.0 W/o or less)	15.56g or less (5.0 W/o or less)
Density of pellet	93%TD*	93%TD*	93%TD*	93%TD*
Diameter of pellet	0.544cm	0.544cm	0.544cm	0.544cm
Length of fissile substance	72cm or less	36cm or less	72cm or less	72cm or less
(Cladding tube)				
Material	Stainless steel	Stainless steel	Stainless steel	Stainless steel
Inner/outer diameters	0.56/0.65cm	0.56/0.65cm	0.56/0.65cm	0.56/0.65cm
Quantity	15	6	14	14

* Theoretical density 100% TD = 11.46 g/cm^3 ($^{239}PuO_2$)

Table (II)-E.1 Specifications of Contents

(No. 2)

Item	Contents VI	Contents VII	Contents VIII	Specifications used in this calculation
(Fuel)				
Material	PuO_2-UO_2	PuO_2-UO_2	PuO_2-UO_2	PuO_2-UO_2
Mass of oxide mixtures	1,590g or less	7,140g or less	1,710g or less	11,453g or less
Mass of ^{235}U	881g or less	47g or less	1,032g or less	6,747g or less
Mass of Pu-fissile	337g or less	171g or less	423g or less	2,818g or less
Uranium enrichment	90W/o or less	0.72W/o or less	97W/o or less	97W/o or less
PuO_2 enrichment	31W/o or less	3.2W/o or less	31W/o or less	31W/o or less
Composition of Pu isotopes				
^{238}Pu	0.43g or less (0.1W/o or less)	- (-)	0.9g or less (0.1W/o or less)	0.0 W/o
^{239}Pu	348.00g or less (80.0W/o or less)	185.40g or less (92.0W/o or less)	450.0g or less (88.0W/o or less)	80.0 W/o
^{240}Pu	87.00g or less (20.0W/o or less)	18.14g or less (9.0W/o or less)	108.0g or less (20.0W/o or less)	10.0 W/o
^{241}Pu	21.70g or less (5.0W/o or less)	2.02g or less (1.0W/o or less)	18.0g or less (2.0W/o or less)	10.0 W/o
^{242}Pu	4.53g or less (1.0 W/o or less)	0.20g or less (0.1 W/o or less)	4.5g or less (2.5 W/o or less)	0.0 W/o
Density of pellet	93%TD*	94%TD*	93%TD*	93%TD*
Diameter of pellet	0.544cm	1.05cm	0.655cm	0.544cm
Length of fissile substance	140cm or less	140cm or less	92cm or less	140cm or less
(Cladding tube)				
Material	Stainless steel	Zircaloy	Stainless steel	Replaced by water
Inner/outer diameters	0.56/0.65cm	1.083/1.223cm	0.67/0.75cm	
Quantity	9	6	9	Approx. 33

E.3 Specifications of the Models

E.3.1 Analysis Models

The structural evaluation run in Section A of this chapter (II) has shown that deformations occurred in the shock absorbers only after the package had been subjected to, under both normal and accident test conditions, an assortment of tests (a set consisting of water spray testing, 0.3-m free drop onto a corner or onto each of the quaters of each rim testing, 0.6-m free drop testing, stack testing, penetration testing, 9-m free drop testing, Drop Test II, thermal testing, and 0.9-m water immersion testing or a set consisting of water spray testing, 0.3-m free drop onto a corner or onto each of the quaters of each rim testing, 0.6-m free drop testing, stack testing, penetration testing, and 15-m water immersion testing). For this reason, assuming that shock absorbers are nonexistent in the criticality analysis, the package body's geometric (dimensional, shape) conditions remain unchanged under both normal and accident test conditions. For this reason, both damaged and undamaged packages can be represented by common models.

(1) Analysis model representing a package in isolation

The effective multiplication factor k_{eff} to be applied to packages in isolation is calculated using the Monte Carlo calculation code, KENO.

The analysis model (hereafter called "package-in-isolation analysis model") is shown in Fig. (II)-E.1.

In the case of packages in isolation, reducing the leakage of neutrons to a minimum causes the effective multiplication factor to be rated even higher. For this reason, the package is assumed to be surrounded by water reflector measuring 20 cm in thickness. The efficacy of the reflector saturates as the thickness of its material increases by several times the diffusion length. Since the diffusion length stands at approximately 3 cm in the case of water, the model surrounded by the 20-cm-thick water reflector can be seen as being surrounded by water of infinite thickness.

Furthermore, even though fuel pins are placed into fuel supporting cans, these individual fuel pins are not necessarily spaced equidistantly inside those fuel supporting cans as shown in Fig. (II)-E.2. In this analysis, individual fuel pins were, therefore, assumed to be in close contact with adjacent fuel pins as shown in Fig. (II)-E.3, the most favorable arrangement from the viewpoint of criticality. There were approximately 33 fuel pins in this arrangement. The contents-storage region was modeled by replacing it with a homogeneous mixture of uranium-plutonium mixed oxide fuel and water.

In the modeling process, the following hypotheses were set up:

(a) The package is immersed fully in water, and water has seeped into the boundary of containment.

(b) Excluding the inner shell, the lead shield, and the outer shell, all parts are replaced with water.

(c) A homogeneous mixture of uranium-plutonium mixed oxide fuel and water represents the contents.

As is evident from the results of the structural evaluation, since the containment sealing capability of the package maintains its integrity even under accident test conditions, there is really no possibility of water seeping in. However, as shown in Appendix 2, the entry of water increases the degree of severity by bringing the package yet another notch closer to criticality. Hypothesis (a) therefore represents a supposition which leads to the obtainment of a higher effective multiplication factor to be on the safe side.

Stainless steel, which is the prime constituent material of the package, has a relatively

large thermal-neutron absorption cross section (Σa). Replacing this stainless steel with water which has a relatively small Σa and large moderating power causes the effective multiplication factor to be calculated as even higher. Furthermore, since the resin is behind water in terms of both moderating power and ratio as shown in Table (II)-E.2, the replacement of the resin layer with water also causes the effective multiplication factor to be computed as even greater. For these reasons, (b) can be rated as a supposition on the safe side.

Hypothesis (c) can be considered by using a cross section that takes into account the thickness of the hydrogenous moderator surrounding the fuel or the cross-sectional area that incorporates the moderating effect of water. Furthermore, since approximately 33 fuel pins were assumed in the analysis, which is more than two times greater than the actual maximum of 15, and the these fuel pins were assumed to be arranged optimally in favor of criticality, hypothesis (c) is a supposition that is on the safe side.

Table (II)-E.2 Moderating Power and Ratio of Water and Resin

	Water	Resin
Moderating power $\xi\Sigma s(cm^{-1})$	1.4	0.94
Moderating ratio $\xi\Sigma s/\Sigma a$	70	63 (when ^{10}B is neglected) 3 (when ^{10}B is counted)

(2) Analysis model representing one package in an array of packages

Since, in the case of packages in isolation, k_{eff} is maximized when the leakage of neutrons is at its minimum, an analysis model featuring small leakage was set up. However, when it comes to an array of packages, it becomes necessary to take their mutual effects into consideration. This requirement sets an array of packages separate from packages in isolation.

In this analysis, the infinite multiplication factor $k\infty$ for application to an infinite number of packages arranged in an arbitrary array is calculated using the Monte Carlo calculation code, KENO.

The analysis model (hereafter called "array-of-packages analysis model") is shown in Fig. (II)-E.4. In the construction of this model, individual packages were assumed to be in close contact with adjacent packages in order to maximize their individual interaction. Supposing the prismatic surfaces of the quadrangular-prism-shaped analysis model completely reflect, no neutrons absorption occurs because the spaces between the periphery of the cylinder and the prism are void. This is the same as a condition in which neutrons are reflected on the periphery of the cylinder or a condition in which an infinite number of packages are arranged in an array of infinite size.

The other hypotheses that have been set up in the process of modeling were the same as those formulated for application to packages in isolation, and all of them were on the safe side.

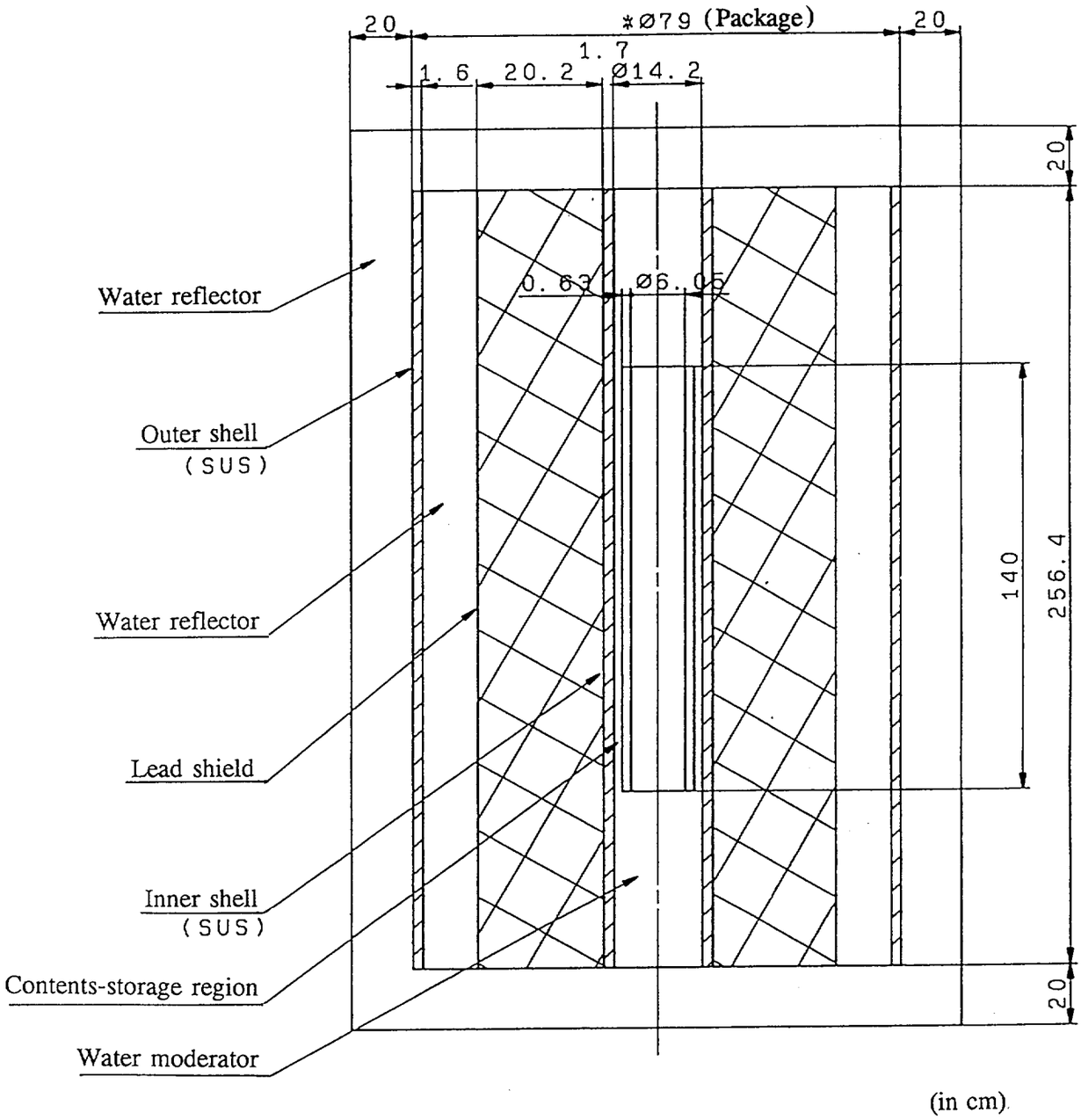

* : Indicates values assuming the dimensional tolerance.

Fig. (II)-E.1 Analysis Model of the Package in Isolation

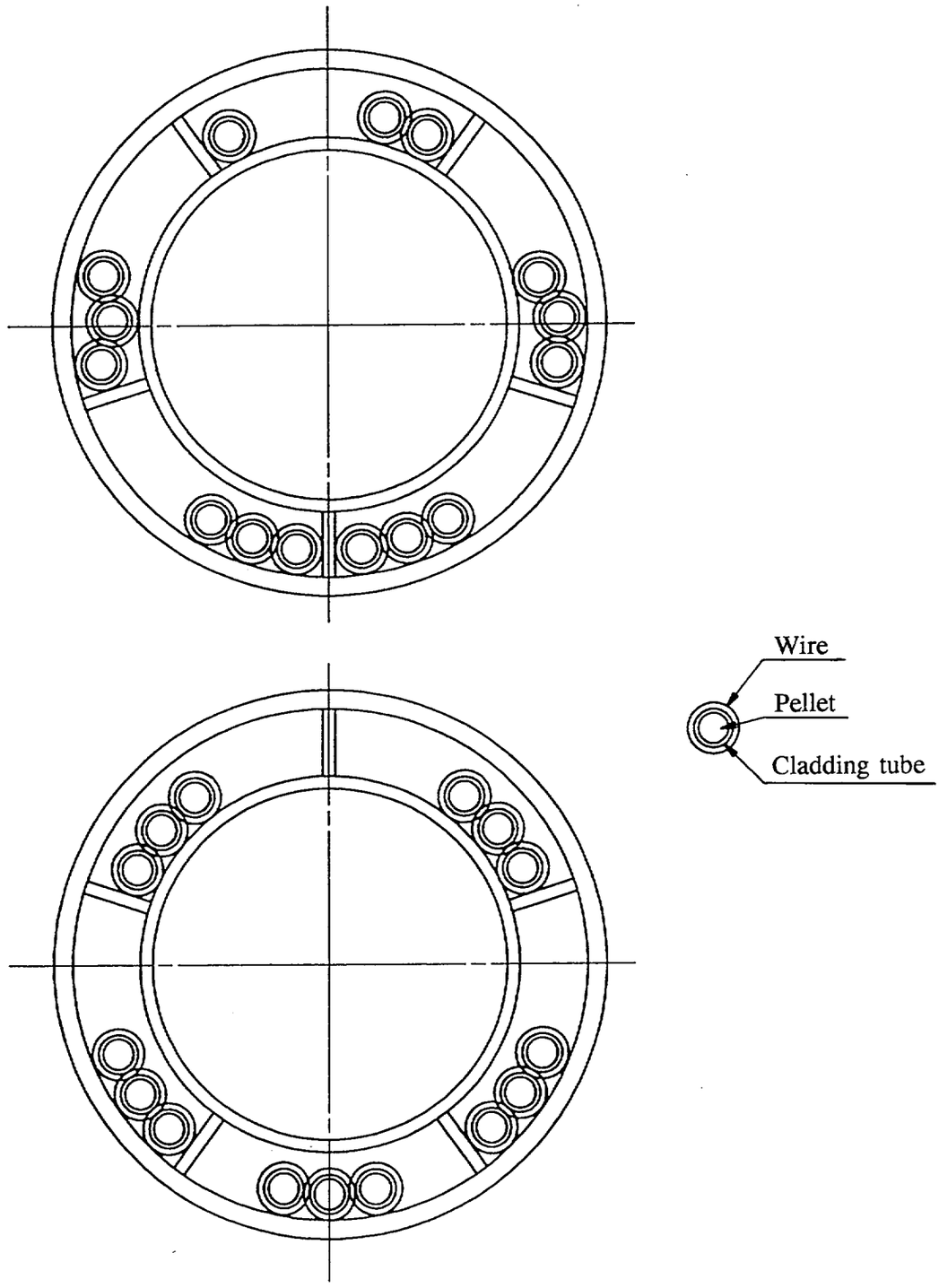

Fig. (II)-E.2 The Arrangement of Contents

Heterogeneous model

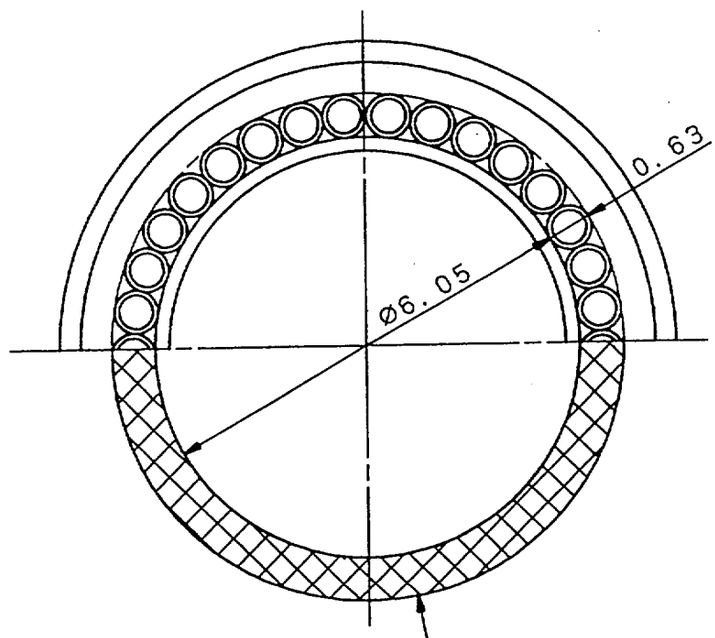

(in cm)

Homogeneous model

Homogeneous mixture of mixed oxide and water
(The cladding tube is replaced with water)

Fig. (II)-E.3 Model of Contents-Storage Region

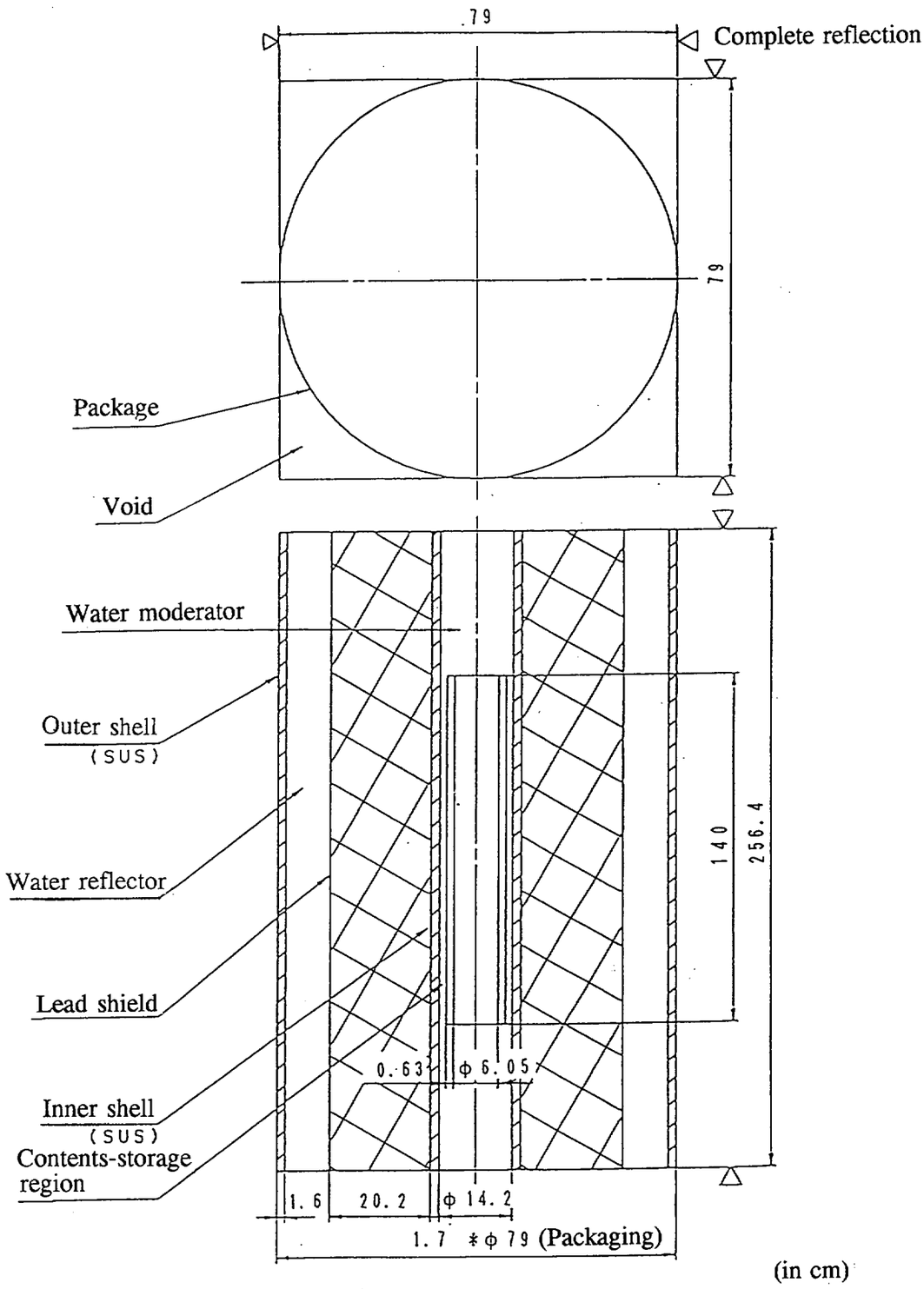

Fig. (II)-E.4 Analysis Model of Array of Packages

*: Indicates values assuming the dimensional tolerance.

E.3.2 Number Density of Atom in Each Individual Region of the Criticality-Analysis Models

The number density of atom in each individual region of the package-in-isolation analysis model and the array-of-packages analysis model at room temperature are shown in Table (II)-E.2. In each model, the contents-storage region was represented by a homogeneous mixture of uranium-plutonium mixed oxide fuel and water. (The cladding was replaced with water.)

Table (II)-E.3 Number Density of Atom of Package-in-Isolation and Array-of-Package Analysis Models

Region	Number Density of Atom (10^{24} atoms/cm^3)	
Contents*	^{235}U	9.34×10^{-3}
	^{238}U	2.85×10^{-4}
Homogeneous mixture of uranium-plutonium mixed oxide fuel and water	^{239}Pu	3.41×10^{-3}
	^{240}Pu	4.25×10^{-4}
	^{241}Pu	4.23×10^{-4}
	H	2.77×10^{-2}
	O	4.16×10^{-2}
Inner and outer shells	C	3.17×10^{-4}
	Cr	1.65×10^{-2}
	Mn	1.73×10^{-3}
	Fe	6.04×10^{-2}
	Ni	6.48×10^{-3}
	Si	1.69×10^{-3}
Lead shield	Pb	3.27×10^{-2}
Water reflector and water moderator	H	6.69×10^{-2}
	O	3.34×10^{-2}

* Contents are represented by the mixture of

Mixed oxide	58.6 vol%
Water	41.4 vol%

E. 4 Subcriticality Evaluation

E.4.1 Calculation Conditions

The maximum number of fuel pins that can be accommodated in a packaging is 15, and the maximum weight of the mixed oxide fuel contained in those fuel pins is 2,160 g.

For the subcriticality analysis, individual fuel pins were assumed to be in close contact with adjacent fuel pins within the storage region as shown in Fig. (II)-E.3. Under this hypothesis, 33 fuel pins were assumed, approximately twice the actual pin count. As a result, the weight of the mixed oxide fuel rose to 11,453 g, indicating that the amount of fuel charged in the analysis is on the safe side to a sufficient degree.

E.4.2 Entry of Water into the Package

Although the containment sealing capability of the package maintains its integrity even when placed under accident test conditions as has been discussed in Section A "Structural Evaluation" of Chapter II, the subcriticality analysis was performed under a condition favoring criticality, in which water made its way into the interior of the boundary of containment. At this time, the density of water (serving as a moderator and a reflector) was chosen to be most favorable for criticality (ρ = 1.0 g/cm^3). The results of hydrogenous density calculations performed in the survey designed to determine the hydrogenous density most favorable for criticality are shown in Appendix 2. As for the arrangement adopted for the analysis, individual packages were assumed to be in close contact with one another, a condition most conducive to the attainment of criticality.

Furthermore, even if the package were to be immersed in water (or buried in snow), this condition would be covered because, as shown in Fig. (II)-E.4, the water reflector has sufficient thickness, as much as 11 cm, to act as a reflector. Temperature-related changes in the density of the hydrogenous moderator and reflector were factored in because the calculations performed in the survey were designed to determine the optimum hydrogenous density favoring criticality (as per Appendix 1).

E.4.3 Calculation Methods

(1) Packages in isolation
The analysis was conducted while the packages were fully immersed.

The effective multiplication factor for application to packages in isolation was obtained by using the multigroup Monte Carlo calculation code, KENO, in conjunction with the 16-group Night-Modifide Hansen-Roach neutron cross section. The Hansen-Roach neutron cross section, which has a cross-section which considers water's moderating effect on fuel, is generally used for criticality analyses. Whereas, the KENO code represents a multigroup Monte Carlo calculation code permitting three-dimensional shape models to be calculated.

(2) Array of packages
A subcriticality analysis was conducted when the individual packages were in close contact with one another, i.e. when their interaction was at its maximum. The calculation code and neutron cross section adopted were identical to those used in the analysis of transport packages in isolation.

E.4.4 Calculation Results

The effective multiplication factors keff that were obtained in the subcriticality analysis are shown in Table (II)-E.4 along with the standard deviations σ, and $k_{eff} + 3\sigma$ figures.

The effective multiplication factor k_{eff} of packages in isolation, as calculated using the package-in-isolation analysis model, stood at 0.75 (with 3σ taken into consideration). The infinite multiplication factor $k\infty$ of an array of packages, as calculated using the array-of-packages analysis model, stood at 0.76 (with 3σ taken into consideration). It should be noted that a package under normal transport conditions has no water in the moderating-water region as pictured in Fig. (II)-E.4. In other words, no water is present in the moderating-water region or in the contents-storage region. Therefore, this condition was applied to the package-in-isolation analysis model and the effective multiplication factor keff was calculated. As a result, $k_{eff} = 0.179$ was obtained. This value was used for the neutron multiplication calculations shown in Section (II)-D "Shield Analysis."

Table (II)-E.4 Calculation Results

Condition		k_{eff}	σ	$k_{eff}+3\sigma$
During normal transport		0.166	0.0043	0.179
Damaged or undamaged	Package in isolation	0.709	0.0153	0.75
	Array of packages	0.721	0.0121	0.76

E.5 Summary and Evaluation of Results

In the case of supporting cans, fuel supporting cans and racks, structural provisions are made in the form of dividers and the like to reduce the possibility of nuclear hazards by preventing fuel pins from concentrating in one place. Furthermore, the outer shell, the inner shell, and the inner container combine to form a strong structure so that the package itself doesn't become deformed during the various drop tests.

For he criticality analysis, evaluations were made under the hypotheses that fuel pins had concentrated on one side and water had leaked into the interior of the package. These hypotheses were set up to maximize nuclear hazards.

The criticality analysis has shown that the package remained within the bounds of subcriticality irrespective of whether it was damaged or undamaged, and irrespective of the number of the packages and the arrangement it adopted.

E.6 Appendix

1. Consideration of a Hydrogenous Density Most Favorable to Criticality

The hydrogenous density of 1 g/cm^3 adopted for the hydrogenous moderator (including the hydrogenous moderator inside the contents-storage region) and the reflector used for the criticality analysis of the package represents the hydrogenous-density conditions most strongly favoring criticality. This justification is described below.

The analysis model which was used in the criticality analysis is shown in Appendix Fig. (II)-E.1. Appendix Fig. (II)-E.2 plots the infinite multiplication factor $k\infty$ using the hydrogenous density as a parameter. The infinite multiplication factor was calculated using the one-dimensional discrete ordinates transport code, ANISN.

From Appendix Fig. (II)-E.2, it is apparent that the hydrogenous density most favorable to criticality stands at 1 g/cm^3. A hydrogenous density (of 1 g/cm^3), which was adopted for the criticality analysis of the package, thus proved to be the optimum for criticality.

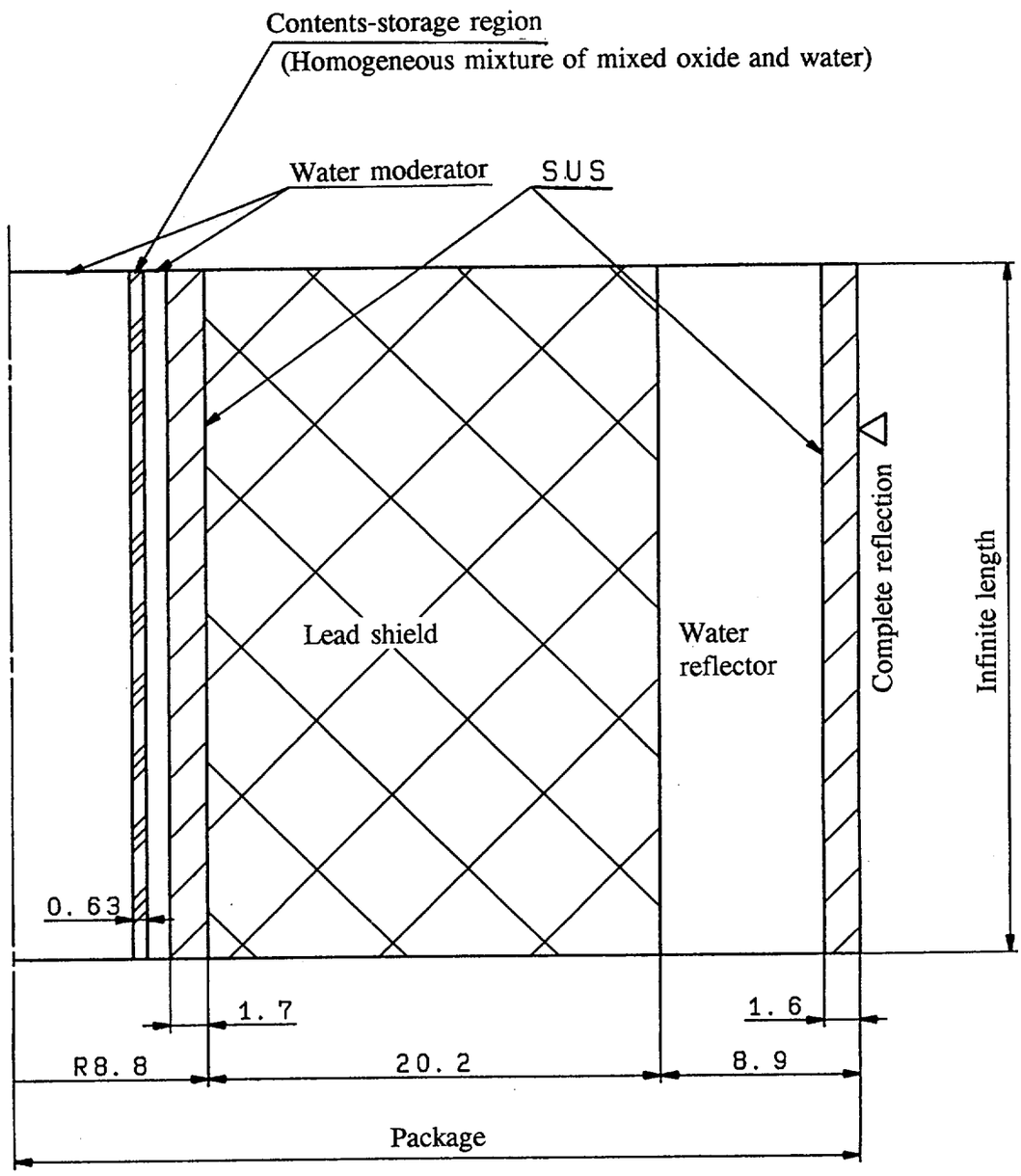

(in cm)

Fig. (II)-E-App.1 Analysis Model for Optimum Hydrogenous Density

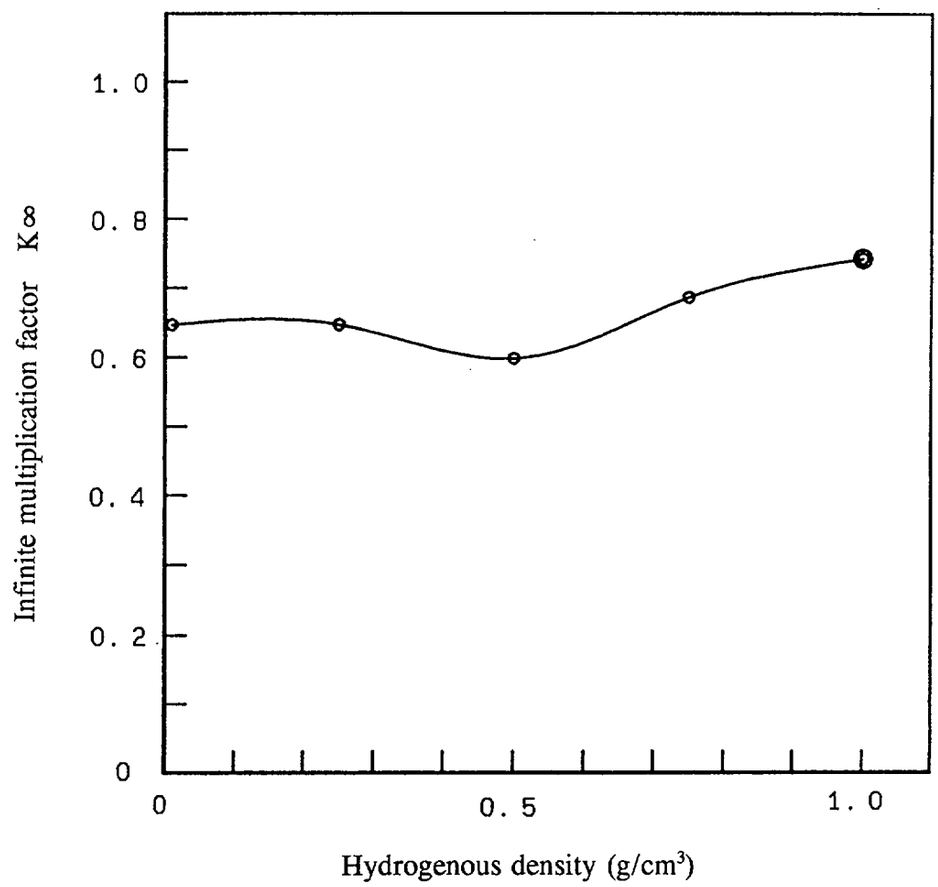

Fig. (II)E-App.2 Hydrogenous Density and Infinite Multiplication Factor

(II)-F Evaluations of Compliance to Ordinances of the Prime Minister's Office and Notifications of the Science and Technology Agency

To verify that the design of the package conforms to engineering criteria stipulated in Ordinances of the Prime Minister's Office and Notifications of the Science and Technology Agency, tables were prepared for the individual clauses as shown in Table (II)-F.1.

(II)-F.1 Evaluations of Compliance to the Ordinance of the Prime Minister's Office and Notification of the Science and Technology Agency (Page 1)

Ordinance of the Prime Minister's Office	Notification of the Science and Technology Agency	Description	Corresponding item in the application form	Remarks
Article 3				
Paragraph 1	Article 2	Not applicable because the package is a type B(U) package		
Paragraph 2	Article 3	Not applicable because the package is a type B(U) package		
Paragraph 3		The package can hold any of the following 8 different kinds of contents: Contents I, II, III, IV, V, VI, VII, and VIII. Contents I, II, IV, V, VI, VII, and VIII are irradiated fuel pins, measuring 2.03×10^{15} Bq, 4.96×10^{14} Bq, 1.99×10^{15} Bq, 3.85×10^{14} Bq, 1.97×10^{15} Bq, 3.74×10^{13} Bq, and 1.27×10^{15} Bq, respectively, at the maximum radioactivity level. Contents III, however, are irradiated stainless steel, and their maximum radioactivity level stands at 1.63×10^{14} Bq. Since the radioactivity levels of the above contents exceed the limit A_2 mandated by the Ordinance, the package is categorized as a type B(U) package.	Section D of Chapter I	
Clause 2		Not applicable		
Clause 3		Since the package is a type B(U) package, it is subject to the engineering criteria stipulated in Article 7 of the Ordinance of the Prime Minister's Office.		
Article 4		Not applicable because the package is a type B(U) package		
Article 5		Not applicable because the package is a type B(U) package		

(II)-F.1 Evaluations of Compliance to the Ordinance of the Prime Minister's Office and Notification of the Science and Technology Agency (Page 2)

Ordinance of the Prime Minister's Office	Notification of the Science and Technology Agency	Description	Corresponding item in the application form	Remarks
Article 6		Not applicable because the package is a type B(U) package		
Article 7 Paragraph 1		The package is designed to permit safe and easy handling as explained below:		Ordinance, Para. 1 of Art. 5, Para. 1 of Art. 4
		1. The package can be handled safely and with ease with the help of a crane using the lifting lugs together with the specified lifting arrangement. Furthermore, the package can be securely tied down to a vehicle or the like by using the specified fixing device during transport.	Section C of Chapter I	
		2. The package lifting work can be divided into horizontal position and vertical-position lifting work. These two types of lifting work require different lifting lugs and lifting implements. In the case of horizontal-position lifting, horizontal lifting lugs are used together with special lifting implements. The lifting lugs for horizontal operation are designed to withstand loads of up to three times the weight of the package including its transport skid, and can handle snatch liftings with a sufficient margin of safety. Furthermore, the structure of the lifting lugs is designed to prevent accidental disengagement. In the case of vertical-position lifting, the lifting trunnions are used together with the main-body lifting arrangement. Since the vertical-lifting load is set at three times the weight of the package without the shock absorbers and the transport skid, snatch liftings can be handled with a sufficient margin of safety. Furthermore, the structure of the lifting equipment is designed to prevent accidental disengagement. During transport, the holes of the vertical-position fastening lugs are stopped up with bolts and, at the same time, the lifting lugs on the shock absorbers are sealed in order to prevent them from unintentionally being used to lift the package. There is no fear that the lifting trunnions will be used to lift the package by mistake because of the necessity of using the specified main-body lifting arrangement.	A.4.4 of chapter II	

Ordinance of the Prime Minister's Office	Notification of the Science and Technology Agency	Description	Corresponding item in the application form	Remarks
		3. The package features a construction in which the rear base plate and the pivoting trunnions are utilized to fasten the package on the transport skid. The fixing device is designed to withstand the following accelerations during transport: 10 G in the direction the vehicle is going, 5 G laterally, and 2 G in a vertical direction. 4. Since the natural oscillation frequency of the package is in excess of 60 Hz, the difference between this frequency and the frequency of the vibrations the package receives on the platform of the truck (10 Hz) is too great to produce any resonance.	A.4.5 of Chapter II	
		The packaging is designed so that there is no chance that it will develop cracks or fractures due to changes in temperature and internal pressure or vibrations which the packaging is expected to experience in transport as explained below: 1. The packaging consists of an outer container, the shock absorbers, and an assembly of receiving cans. Made of the following constituent components, the packaging features performance characteristics such as sufficient structural strength, heat resistance, and gastight containment. ○ Outer shell, inner shell, intermediate shells, lids, inner container, fuel supporting cans, supporting cans, receiving tubes, rack --- Stainless steel ○ Shields --- Lead, resin, tungsten alloy ○ Heat-dispersion fins --- Copper ○ Shock absorbers --- Balsa wood, firplywood, alumina cement, stainless steel	Section C of Chapter I	Ordinance, Para 1 of Art. 5, Para 2 of Art. 4

Ordinance of the Prime Minister's Office	Notification of the Science and Technology Agency	Description	Corresponding item in the application form	Remarks
		2. Lids (the rotating plug lid, the shielding plug lid, the front and rear lids, the front and rear sampling valve lids, and the penetration hole lid) are firmly bolted down to the specified torques under torque management. They, therefore, cannot open due to increases in internal pressure or vibrations generated during transport. The containment in the opening section of each individual lid is secured by an O-ring(s) made of fluoro rubber.		
		3. The maximum total decay heat of Contents I, II, III, IV, V, VI, VII, and VIII are 260W, 64W, 30W, 250W, 63W, 260W, 3W, and 170W, respectively. Of these, Contents I and II alone are subject to the thermal analysis in storage in the package because of the ways they are accommodated and their total decay heat. As for Contents I, evaluations are made on two different storage conditions: storage in the middle of the container interior and storage to one side. According to the results of these evaluations, Contents I concentrating in one area, Contents I situated in the middle, and Contents II placed in their proper location inside the package had maximum temperatures of 375°C, 370°C, and 365°C, respectively. Under the circumstances, the physical properties of the accommodated fuel pins (made of sintered pellets and stainless steel) cannot undergo any changes. Furthermore, the pressure inside the interior of the inner shell soared to 60 kPa (G), meaning that the containment of the package maintains its integrity.	B.4 of Chapter II	

(II)-F.1 Evaluations of Compliance to the Ordinance of the Prime Minister's Office and Notification of the Science and Technology Agency (Page 5)

Ordinance of the Prime Minister's Office	Notification of the Science and Technology Agency	Description	Corresponding item in the application form	Remarks
		4. Thermal stresses are induced within the inner shell, the lead shield, the resin layer, and the outer shell due to the difference between the package's initial temperature and the elevated temperature, which is reached when a state of equilibrium is achieved following the accommodation of contents. These stresses, however, produce no cracks in the package. Furthermore, since the inner container is not constrained by thermal expansion, its containment cannot be adversely affected.	A.5.1.2 of Chapter II	
		Since the outer surface of the package is stainless steel, no rust can develop here. Furthermore, since the surfaces have a smooth finish, they prevent the collection and retention of water.	A.5.2 of Chapter II	Ordinance, Para 1 of Art. 5, Para 3 of Art. 4
		Since the prime constituent materials are stainless steel, lead, and resin using a neutron-shielding material, these materials react neither with one another nor with the contents, either physically or chemically.	A.4.1 of Chapter II	Ordinance, Para 1 of Art. 5, Para 4 of Art. 4
		Since all the valves are covered by shock absorbers, there is no possibility that they will be operated by mistake.	Section C of Chapter I	Ordinance, Para 1 of Art. 5, Para 5 of Art. 4

Ordinance of the Prime Minister's Office	Notification of the Science and Technology Agency	Description	Corresponding item in the application form	Remarks
		Since the outer dimensions of the package, including the front and rear shock absorbers and the transport skid, are approximately 330 cm in length, approximately 140 cm in width, and approximately 150 cm in height, each side of the rectangular solid circumscribed unto the package measures 10 cm or more.		Ordinance, Para 2 of Art. 5
		The packaging's many lids (namely, the shielding plug lid, the rotating plug lid, the front lid, the rear lid, the front and rear sampling valve lids, and the penetration hole lid) are completely covered by the shock absorbers during transport. Furthermore, since the shock absorbers are sealed following their installation on the packaging itself, the lids cannot be opened accidentally. Moreover, the design is such that any tampering will be evident.	Section C of Chapter II	Ordinance, Para 3 of Art. 5
		1. When contents of the maximum total decay heat are accommodated in the packaging, the maximum temperature reached by the inner shell, the lead shield, the resin layer, and the outer shell is below 90°C. This means that the physical properties of the individual constituent components remain unchanged. In addition, where the low-temperature strength is concerned, experiments and technical literature show that the individual constituent components do not develop brittle fractures at -40°C. 2. Since the maximum temperature of the packaging's lead shield is 84°C, the lead that is used here does not melt and, consequently, the shielding performance is not degraded.	A.4.2 of Chapter II	Ordinance, Para 4 of Art. 5

Ordinance of the Prime Minister's Office	Notification of the Science and Technology Agency	Description	Corresponding item in the application form	Remarks
		3. The package does not use water as a coolant. Therefore, the possibility of freezing does not exist. Since the shock absorbers use balsa wood which has been sufficiently cured by drying, they also have no possibility of being adversely affected by freezing.		
		Since the package's withstand pressure is 192 kPa, its gastight containment performance can be maintained intact even if the outside air pressure drops to 25 kPa.	A4.6 of Chapter II	Ordinance, Para 5 of Art. 5
		The package will not, under any circumstances, be used to hold liquid contents.		Ordinance, Para 6 of Art. 5
		The highest dose equivalent rate reading registered on the surface of the package holding contents with the highest radioactivity level (Contents I), was 0.45 mSv/h in the package's front section. This means that the mandated engineering criterion (setting the upper limit at 2 mSv/h) is satisfied. Moreover, the highest dose equivalent rate reading registered at a distance of 1 m from the periphery of the package was 0.066 mSv/h, meaning that the mandated engineering criterion (setting the limit at 0.1 mSv/hr) was met.	D.1 of Chapter II	Ordinance, Para 7 of Art. 5, Para 8 of Art. 5
		Prior to shipment, it is verified that the density of radioactive substances as measured on the surface of the package is less than the values given below:	Chapter IV	Ordinance, Para. 9 of Art. 5

Radiation rays emitted	Density Bq/cm^2
α rays	0.4
Other rays	4

(II)-F.1 Evaluations of Compliance to the Ordinance of the Prime Minister's Office and Notification of the Science and Technology Agency (Page 8)

Ordinance of the Prime Minister's Office	Notification of the Science and Technology Agency	Description	Corresponding item in the application form	Remarks
		Since the package is inspected when the contents are placed into it prior to shipment, no objects which may impair the safety of the package are accommodated. Furthermore, no items other than the documents and tools that are required to handle the package will be shipped together with the package.	Chapter IV	Ordinance, Para. 10 of Art. 5
Article 7 Paragraph 2		An analysis is conducted on the package under the normal test conditions stipulated in the Notification for application to type B(U) packages.	A.5 of Chapter II	
	Article 17, Separate paragraph 7	Normal test conditions designed for application to type B(U) packages		
		I. Water spray test Since the package is cylindrical, it prevents the collection and retention of water. Furthermore, its stainless-steel surface eliminates the possibility of rust formation. Thanks to its O-ringequipped lids, the package has a watertight construction. For this reason, the performance of an actual test poses no problems.	A.5.2 of Chapter II	Notification, Nos. 1 and 2 of Separate Para. 4, No. 1 of Separate Para. 3
		II. After the package has been brought under the conditions defined for the foregoing test I, it is placed under the following conditions: Free-fall Drop Test: Since the maximum weight of the package is 11,000 kg, the drop height is 0.6 m as specified in the Notification. In the analysis, the degree of deformation is calculated after the package is dropped vertically onto a drop-test platform, which is a rigid surface in a vertical position. Thereafer, it is dropped in a horizontal position, and then on a corner.	A.5.3 of Chapter II	

Ordinance of the Prime Minister's Office	Notification of the Science and Technology Agency	Description	Corresponding item in the application form	Remarks
		Calculations of stresses induced by mechanical impact are calculated under the accident test conditions adopted for Drop Test I. These represent even more rigorous test conditions.		
		Stack Test: A load which corresponds to five times the weight of the package is approximately 5.39 × 10^5 N. Meanwhile, the load which is obtained by multiplying the vertical projected area by 13 kPa is approximately 4.51 × 10^4 N. Thus, the analysis is performed using the former load, to be on the safe side.	A.5.4 of Chapter II	
		Penetration Test: The analysis is performed by dropping a mild steel bar, which has a semiround tip whose radius is 3.2 cm and weighing approximately 6 kg, from a height of 1 meter onto the package's weakest section (where the stainless steel casing measures 16 mm in thickness).	A.5.5 of Chapter II	
		The Contents are neither liquid nor gaseous.		Notification, No. 2 of Separate Para. 3
		Under the specified conditions, the maximum dose equivalent rate reading registered on the surface of the package holding contents of the highest radioactivity level (Contents I) is 0.45 mSv/h in the package's front section. This means that the mandated engineering criterion (setting an upper limit at 2 mSv/h) is satisfied. Furthermore, the maximum rate of increase in surface dose equivalent rate stands at 18.9%, which means that there are no significant increases in the surface dose equivalent rate.	D.5 of Chapter II	Ordinance, Para 2 of Art. 6-I

(II)-F.1 Evaluations of Compliance to the Ordinance of the Prime Minister's Office and Notification of the Science and Technology Agency (Page 10)

Ordinance of the Prime Minister's Office	Notification of the Science and Technology Agency	Description	Corresponding item in the application form	Remarks
		When the package is brought under the specified conditions, its containment is not in any way degraded. When the package is used to accommodate Contents VIII, whose radioactivity level is the highest among all the contents (Contents I, II, IV, V, VI, VII, and VIII), the leakage rate of the radioactive materials is 0.51 against $A_2 \times 10^{-6}$, meaning that the leakage criteria stipulated in the Ordinance and Notification are satisfied.	C.3.1 of Chapter II	Ordinance, Para 2-II of Art. 6
		When Contents I, which produce the maximum decay heat of 260W, are placed into the package, and this package is placed under the given conditions, its highest surface temperature is 72°C. This temperature reading, therefore, satisfies the engineering criterion stipulated in the Ordinance (setting the upper temperature limit at 85°C for application to exclusive-use packages).	B.4.6 of Chapter II	Ordinance, Para 2-III of Art. 6
		The package's pre-shipment inspection verifies that the density of radioactive materials as measured on its surface is less than the mandated criteria. Furthermore, the package's hermetic containment remains intact even if it is placed under the specified conditions. For these reasons, the density of the radioactive materials on the surface of the package satisfies the mandated criteria stipulated in both the Ordinance and the Notification.	C.3 of Chapter II	Ordinance, Para 2-IV of Art. 6
	Separate paragraph 4, No. 1	When the package is placed in an environment in which the ambient temperatures range is between 38°C and -40°C, it satisfies the mandated engineering criteria. For the reasons above, the analysis has shown that all of the general test conditions governing type B(U) packages are satisfied.		

(II)-F.1 Evaluations of Compliance to the Ordinance of the Prime Minister's Office and Notification of the Science and Technology Agency (Page 11)

Ordinance of the Prime Minister's Office	Notification of the Science and Technology Agency	Description	Corresponding item in the application form	Remarks
Article 7 Paragraph 3		Analysis is performed on the package by placing it under the accident test conditions that are stipulated in the Notification for application to type B(U) packages.	A.6 of Chapter II	
	Article 18, Separate paragraph 8	Accident test conditions designed for application to type B(U) packages		
		Drop Test I: An analysis is performed by vertically dropping the package (free fall from a height of 9 meters) onto a drop-test platform, which is a rigid surface. The package is dropped in an upright position (front-end first and rear-end-first drops), in a horizontal position, on a corner, and in an oblique position, so that it sustains the greatest possible damage.	A.6.1 of Chapter II	Notification, Separate Para. 5, No. 1-I
		Drop Test II: This test is stipulated to be performed upon completion of Drop Test I. The package is to be dropped from a height of 1 m onto a flat-top mild steel bar measuring 15 cm across and at least 20 cm in length as follows: horizontal drop leading to impact with the midsection of the outer shell and the shock absorbers; then vertical drop leading to impact with the shock absorbers, and the protruding parts, etc.	A.6.2 of Chapter II	Notification, Separate Para. 5, No. 1-II
		Fire-resistance Test: An analysis is performed after this fire-resistance test is conducted following completion of the drop tests. Only Contents I and II are analyzed given that Contents III, IV, V, VII, and VIII have small heating values, whereas Contents IV and VI are virtually identical to Contents I. Contents I are analyzed on assumption that they are first placed in the middle, and then concentrated at either end inside the packaging cavity.	B.5 of Chapter II	Notification, Separate Para. 5, No. 2

Ordinance of the Prime Minister's Office	Notification of the Science and Technology Agency	Description	Corresponding item in the application form	Remarks
		The environmental conditions for the fire-resistance test are as follows: The package is exposed to a thermal radiation environment rated at 0.9 for 30 minutes. The emissivity of the surface of the package is set at 0.8. Furthermore, it is assumed that there is no solar heat load when the package is undergoing the fire-resistance test. However, the transfer of heat from the surrounding environment as a result of both radiation and convection is taken into consideration. After application of the heat, the package is to be set aside in an environment at an ambient temperature of 38°C until it cools naturally. Then, calculations are made until the temperatures of the interior components start dropping.		
		Water immersion test: An analysis is performed after this test is carried out following completion of the fire-resistance test. It is assumed that a pressure of 147 kPa (G) which corresponds to the pressure at a depth of 15 m in water is applied to the package. Any internal pressure is ignored. The section which is most vulnerable to the action of external pressure, namely, the section of the box on the side of the rotating plug, is analyzed.	A.6.4 of Chapter II	Notification, Separate Para. 5, No. 3
		When the contents with the highest-intensity radiation-source specifications (Contents I) are accommodated in the packaging and placed under the specified conditions, the highest dose equivalent rate reading registered at a distance of 1 m from the surface of the package is 0.25 mSv/h. This means that the mandated engineering criteria (setting the ceiling at 10 mSv/h.) is satisfied.	D.1 of Chapter II	Ordinance, Art. 6, Para. 3-I
		Under the given conditions, the soundness of the boundary of containment is secured notwithstanding the impacts sustained in the course of the Drop Tests, the maximum internal pressure developed in the course of the fire-resistance test, and the loads resultaing from thermal stress.	C.4.2 of Chapter II	Para. 3-II

Ordinance of the Prime Minister's Office	Notification of the Science and Technology Agency	Description	Corresponding item in the application form	Remarks
		Furthermore, the highest temperatures of the O-rings that are found in the individual lids are lower than the maximum service temperatures of the O-rings. For this reason, the hermetic containment is maintained. When the package is holding Contents VIII whose radioactivity levels are the highest among all the contents (Contents I, II, IV, V, VI, VII, and VIII), the leakage of the radioactive materials is 0.000092 per week compared with the mandated limiting value A_2. This means that the leakage criteria mandated by the Ordinance and the Notification are satisfied.		
Article 7 Paragraph 4		Unattended storage for one week: It has been shown by analysis that the package is capable of satisfying the mandated engineering criteria governing type B(U) packages after the package has been set aside unattended for a duration of one week in an environment with an ambient temperature range of 38°C to -40°C subsequently to the completion of the tests prescribed in Separate article 5 of Notification.	A.6.5 of Chapter II	
Article 7 Paragraph 5		The package employs natural convection cooling which eliminates the need for filters to filter the interior gases, as well as the need for a mechanical arrangement to cool the accommodated nuclear fuel or the like.		
Article 7 Paragraph 6		The maximum working pressure of the inner shell of the package is 60 kPa (G). Since this value is increased only a small amount to 80 kPa (G), the engineering criterion (setting the ceiling at 700 kPa (G)) mandated by the Ordinance of the Prime Minister's Office is satisfied. As discussed above, the analysis has shown that all of the accident test conditions governing type B(U) packages are satisfied.		

(II)-F.1 Evaluations of Compliance to the Ordinance of the Prime Minister's Office and Notification of the Science and Technology Agency (Page 14)

Ordinance of the Prime Minister's Office	Notification of the Science and Technology Agency	Description	Corresponding item in the application form	Remarks
Article 8, Article 9, Article 10		Not applicable because the package is a type B(U) package		
Article 11		Since the neutron multiplication factor, K, under transport conditions stands at 0.179, there is no possibility that criticality will be reached.		
Paragraph 1	Article 23 Separate paragraph 11	After completion of a water spray test, a 0.3-m free drop onto a corner or onto each of the quaters of each rim, a 0.6-m free drop test, a stack test, and a penetration test, the following descriptions hold:	A.9.1 of Chapter II, E.4.5 of Chapter II	
I		* In the criticality analysis, the reduction in volume is less than 1%.		
II		* No hollow large enough to accommodate a cube whose sides are 10 cm or greater in length is formed.		
III		* Since the hermetic containment remains intact, there is no possibility that water will enter the package's interior.		
IV		* On account of the absence of changes in the criticality configuration, the neutron multiplication factor undergoes no significant changes.		
Paragraph 2 I	Article 24	To create conditions most favorable to criticality, the air inside the container was replaced with water; fuel pins were brought closer together; and the presence of water as a 20-cm-thick reflector was factored in. Even under these simulated conditions, the neutron multiplication factor, K, obtained was 0.75. This means that there is no possibility that criticality will be reached.		
II	Article 25 Separate paragraph 12	Even after the package is subjected to accident test conditions, there is no change in the criticality configuration.	A.9.2 of Chapter II, E.4.5 of Chapter II	
III	Article 26	An infinite number of packages were brought together into close contact with one another and the spaces inside them were replaced with water during the simulation. The neutron multiplication factor K obtained under these conditions was 0.76, which means that there is no possibility that criticality will be reached.		

(II)-F.1 Evaluations of Compliance to the Ordinance of the Prime Minister's Office and Notification of the Science and Technology Agency (Page 15)

Ordinance of the Prime Minister's Office	Notification of the Science and Technology Agency	Description	Corresponding item in the application form	Remarks
IV		After completion of an assortment of tests conducted under the accident conditions, an infinite number of packages were brought together into close contact with one another with their interior air-filled spaces replaced with water during the simulation. Even under these conditions, the neutron multiplication factor, K, remained at 0.76. This means that there is no possibility that criticality will be reached.		

CHAPTER III MANUFACTURE OF PACKAGING

CHAPTER III MANUFACTURE OF PACKAGING

Inspections and tests must be carried out to ensure that this packaging has been manufactured exactly as designed in accordance with the manufacturing method described in the following sections to meet the design conditions of structure, heat, shielding, and criticality specified by the analysis in Chapter II "Safety Analysis of Package for Nuclear Material." The inspections and tests must be carried out under an appropriate quality assurance system throughout the design and manufacturing stages.

(III)-A Packaging manufacturing method

A.1 Outline

This packaging consists of an outer container, shock absorber, and an inner container, as well as fuel supporting cans I and II to house the contents, a supporting can, receiving tube II, a rack, and receiving tube I.

A.1.1 Manufacture components

A.1.1.1 Outer container (See Figs. (III)-4 and (III)-5.)

The shell of the outer container is manufactured by applying the procedure shown in Figs. (III)-1 to (III)-3. That is, the inner shell and outer shell are independently manufactured. The inner shell has a lead cast on its outer surface. The outer shell has copper fins welded in the radiating form longitudinally at the center of its inner surface, and is then filled with resin throughout from top to bottom. The independently manufactured outer shell and inner shell are then assembled. The gap between the lead part of the inner shell and the resin part of the outer shell are filled with alumina cement. Then, the end plates of the shells are welded to create a unified shell body.

A shielding plug lid, shielding plug, rotating plug lid and cover, rotating plug, front/rear lids, lids of front/rear sampling valves, and penetration hole lid are individually manufactured, and assembled.

The manufacturing procedure for each component is as follows.

(1) Manufacturing of the inner shell
The inner shell is made of thick pipe (seamless pipe). After it is purchased, the thick seamless pipe material passes an acceptance inspection. Then, the inner and outer surface of the pipe is machined to the specified dimensions. Both ends of the pipe are grooved. For the front and rear boxes that are to be welded to the ends of the inner shell to which the shielding plug lid, rotating plug lid, and rotating plug lid cover are to be mounted, forged material is purchased, and is subjected to an acceptance inspection before being used. Then, the material is machined into boxes, which are then grooved. Each of the grooved boxes are assembled and welded to each end of the thick pipe inner shell.

The weld is subjected to a radiation transmission test (RT) and a liquid penetrant inspection (PT). In addition, a pressure test and leakage test are also carried out.

Then, the outer surface of the inner shell is protected with partially homogeneous lead lining.

After it is held together as a unit, the inner shell is vertically set. A metallic frame for lead casting is attached around the inner shell, and lead is cast into the gap between the inner shell and the metallic frame to produce an inner shell with a lead shield.

(2) Manufacturing of the outer shell
The outer shell consists of five longitudinal divisions, each of which is formed by bending plates. The five divisions are two 40 mm-thick trunnion mounting cylinders, one 16 mm-thick central cylinder, and two end cylinders.

Three 16 mm-thick shell members are subjected to an acceptance inspection, and edge are then subjected to preparation (grooving). Thereafter, the three plates are lapped and welded at the longitudinal joints. The weld is then subjected to the RT and PT.

The edges of both ends of the 16 mm-thick outer shell division to be attached to the central part, and both ends of the 40 mm-thick outer shell divisions to be attached to each end of the central part are prepared. These three divisions are then welded together to form a unit. This weld is subjected to the RT and PT.

(3) Welding of heat dispersion fins
L-shaped heat dispersion fins are welded on the inner side of the central part of an outer shell unit, which has three shell divisions. This weld is then visually inspected.

(4) Welding of both ends of the outer shell divisions
One grooved-end outer shell division is assembled and welded to one end of the outer sell unit to which the heat dispersion fins have been welded, while the other grooved-end outer shell division is welded to the other end of the outer shell unit. Eventually, five outer shell divisions are unified to make up the outer shell. The weld is then subjected to the RT and PT.

(5) Base plates and suspensions (See Figs. (III)-6 - (III)-9.)
Materials for base plates and supensions are subjected to an acceptance inspection. The materials are then cut into pieces of the specified dimensions, and are formed, assembled, and welded. All base plates and suspensions are individually manufactured. The weld is then subjected to the PT. A dimensional inspection is also carried out on the finished base plates and suspensions.

(6) Attaching of base plates and suspensions to the outer shell.
Base plates and suspensions are welded to the specified positions on the outer shell. The weld is then subjected to the PT.

(7) Welding of the outer shell, partition and intermediate shell, and filling of resin (See Fig. (III)-5.)
Since a part (the trunnion mounting part) of the bore of the outer shell is too small, each of the partitions (plates to separate the central resin layer from the outer resin layers) is divided into three parts. The subpartitions are inserted into the fin-attached side of the outer shell, and are welded into a partition that is then welded to the outer shell. The weld is then subjected to the PT.

A dimensional inspection is then carried out on the part that is filled with resin. The resin filling rate is measured. After the central part is filled with resin, the partition on the resin side is welded. The weld is subjected to the PT. Then, the intermediate shell is welded to the partitions on both sides of the resin-filled part. The weld is subjected to the PT. A dimensional inspection is carried out on the spaces between the intermediate shell and on both ends of the outer shell. Each space is filled with resin. The resin filling rate is measured. Then, the blind plates (end plates) of the resin layers on both ends, sampling valve box, and penetration hole box are welded. A vent hole is made in the intermediate shells on both ends.

This completes the outer shell.

(8) Outer shell and inner shell assembly

The inner shell and outer shell are independently manufactured. Both the inner shell and outer shell are subjected to a dimensional inspection and a welding inspection. Then, the inner shell is aligned and set vertically on the surface plate with the front box down. The outer shell is inserted onto the inner shell gradually from above. The dimension of the clearance between the inner and outer shells is measured. The bottoms of the inner and outer shells are first tack-welded, and then welded.

Then, a dimensional inspection is conducted on the clearance of approximately 10 mm between the tops of the inner shell and the outer shell into which alumina cement will be poured. After the inspection, alumina cement is poured into the gap and allowed to harden. After the alumina cement has hardened, the clearance in the upper end is subjected to a dimensional inspection. The end plate is then attached to the inside of the outer shell, and is welded to the part around the rear box of the inner shell and to the rear outer end plate of the outer shell. The weld is subjected to the PT, which completes the assembly of the inner and outer shells.

(9) Formation of the sampling valve penetration holes, and the rotating plug penetration hole

The sampling valve box and penetration box attached to the integrated inner and outer shells are machined to make a sampling valve penetration hole and a rotating plug penetration hole in the boxes. Pipes are passed through the holes. The boxes above are welded to the front box to form a penetration part connecting the interior of the inner shell and the exterior of this packaging. The weld is then subjected to the PT.

Then, to check the airtightness of the alumina cement filled layer, an airtightness inspection is carried out by using the test hole in the penetration hole box, etc.

(10) Rotating plug lid and rotating plug lid cover (See Figs. (III)-10 and (III)-11.)

Forged materials and sheet materials are subjected to the acceptance inspection. Thereafter, materials are machined into components, which are then assembled into a unit. The assembled unit is welded and machined to form a shell. This shell is divided into two parts. For each of the two divisions, the plate, flange, inner cylinder, and bearing boss are individually assembled together. The assembled units are then welded and machined. After lead is cast into the units, the rotating plug lid and the rotating plug lid cover are completed. The filling-up ratio of the lead is inspected by measuring the weight of each unit before and after casting the lead. The rotating plug lid and its cover, which have been separately produced, are assembled into a unit which is then machined. The weld is then subjected to the PT.

(11) Rotating plug (See Fig. (III)-12.)

After passing the acceptance inspection, sheet materials are machined and molded into a plug shell. The plate and shaft are assembled together and welded to form a can, leaving the installation of The single-sided end plate undone. The dimensional inspection and other required inspections are completed on the tungsten alloy that is then inserted into that can. Then, lead is cast into the can. The end plate is welded to the can that is then machined to complete the rotating plug. The filling-up ratio of the lead is inspected by measuring the weight of the plug before and after lead is cast into the plug. The weld is subjected to the PT.

(12) Shielding plug lid (See Fig. (III)-13.)
After passing the acceptance inspection, bar steel and sheet materials are machined and welded into a can. The material inspection and dimensional inspection are completed on the tungsten alloy that is then inserted into that can. Lead is cast into the can. The flange is welded to the can that is then machined to complete the shielding plug lid. The filling-up ratio of the lead is inspected by measuring the weight of the lid before and after casting the lead. The weld is subjected to the PT.

(13) Shielding plug (See Fig. (III)-14.)
After passing the acceptance inspection, the bar steel and sheet materials are machined. The dimensional inspection and other required inspections are completed on the tungsten alloy that is then inserted into the machined bar steel. The end plate is welded to that bar steel that is then machined to complete the plug.

The filling-up ratio of the lead must be inspected by measuring the weight of the plug before and after casting the lead. The weld is subjected to the PT.

(14) Sampling valve lid and penetration hole lid (See Fig. (III)-15.)
After passing the acceptance inspection, pipe and sheet materials are machined and welded into a can. Lead is then cast into the cans. A lid plate is welded to each of the cans that are then machined to complete the lids.

(15) Front lid and Rear lid (See Figs. (III)-16 and (III)-17.)
After passing the acceptance inspection, sheet materials are machined to complete the lids. A pin is welded to the front lid, and the weld is then subjected to the PT.

A.1.1.2 Shock absorber (See Fig. (III)-18.)

This system uses a rear shock absorber and a front shock absorber. These two shock absorbers are quite the same. Both are manufactured by applying the manufacturing procedure shown in Fig. (III)-2.

After passing the acceptance inspection, sheet materials are machined and welded to form an inner double shell. The inner double shell and the flange are assembled together and are welded to form a double can. The dimensional inspection is conducted on the clearance between two walls of this double can. Alumina cement is fed into the clearance. Then it is checked that alumina cement has hardened. When the cement is sufficiently dried, an end plate is welded to the can. The weld is subjected to the PT. An airtightness inspection is conducted on the can. The single-sided end plate (flanged only head) and the side shell of the facing plate are assembled together, and welded into a shock absorber. Then, the shock absorber is filled with balsa wood and fir-plywood that have passed the specific weight inspection. The balsa wood and fir-plywood are bonded and formed into blocks in advance, taking into account the direction of the grain or lamination. Each block is bonded to the can body of the shock absorber to fill it. After filling the shock absorber, the other end plate (flanged only head or flat plate) is welded to complete the shock absorber. The weld on the external surface is subjected to the PT.

A.1.1.3 Receiving containers (inner container, fuel supporting can I, fuel supporting can II, rack, receiving tube I, and receiving tube II)

(1) Inner container (See Fig. (III)-19.)
After passing the acceptance inspection, pipe and bar steel materials are machined into an

inner container pipe. This inner container pipe consists of three members; one central part and two end parts. Each weld is subjected to the PT. Bar steel material is machined to form the cap of the inner container. This machining completes the inner container.

(2) Fuel supporting cans I and II (See Figs. (III)-20 and (III)-21.)
After passing the acceptance inspection, pipe and sheet materials are machined into a double pipe. The bottom plate is welded to complete a fuel supporting can. A sheet material is formed into a lid that is then welded. Each weld is subjected to the PT. The temporary lid is welded and subjected to a helium leakage test.

(3) Supporting can (See Fig. (III)-22.)
After passing the acceptance inspection, pipe and sheet materials are machined into a double pipe. The bottom plate is then welded to the pipe. The threaded upper lid is formed from a material. The upper lid is then welded to complete the supporting can. Each weld is subjected to the PT.

(4) Rack (See Fig. (III)-23.)
After passing the acceptance inspection, pipe, bar steel, and sheet materials are formed into components that are then welded and assembled. The weld is subjected to the PT.

(5) Receiving tubes I and II (See Figs. (III)-24 and (III)-25.)
After passing the acceptance inspection, pipe, sheet or bar steel materials are formed into tubes. The bottom plug is then welded to each of the tubes. The rear plug is separately formed. This completes the receiving tubes. The weld is subjected to the PT, and also to a helium leakage test.

A.1.2 Assembling of components

The shell of the outer container that has passed the dimensional inspection, visual inspection, and any other required inspections, and that has been surface finished or washed is incorporated with the other components (shielding plug lid, shielding plug, rear lid, rotating plug lid and its cover, rotating plug, front lid, rear sampling valve lid, front sampling valve lid, penetration hole lid, etc.) that have passed the dimensional inspection, visual inspection, and any other required inspections, and that have been surface finished or washed to complete the outer container. The completed outer container is then subjected to the completion inspections described in (III)-B, such as the leakage test and the γ shielding test.

The inner container and fuel supporting cans are inserted into the outer container, which is then subjected to tests such as the operational and functional test, and the load-lifting inspection. Thereafter, the shock absorber is loaded on that outer container that is then subjected to the weight inspection, heat transfer inspection, and every other inspection. Such inspections complete the unit.

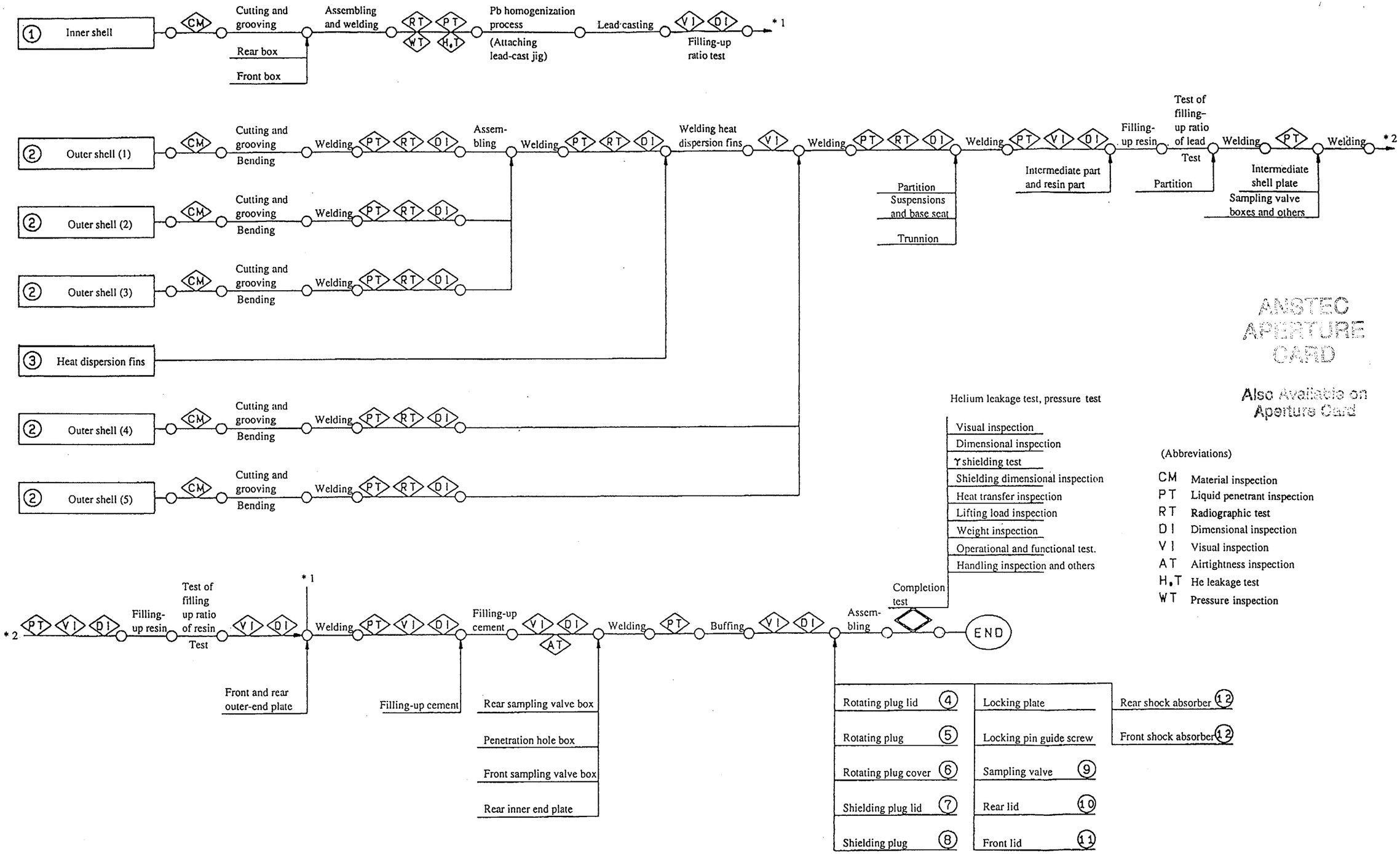

ANSTEC APERTURE CARD

Also Available on Aperture Card

Fig. (III)-1 Manufacturing Procedure for Packaging (1)

9601260203 -41

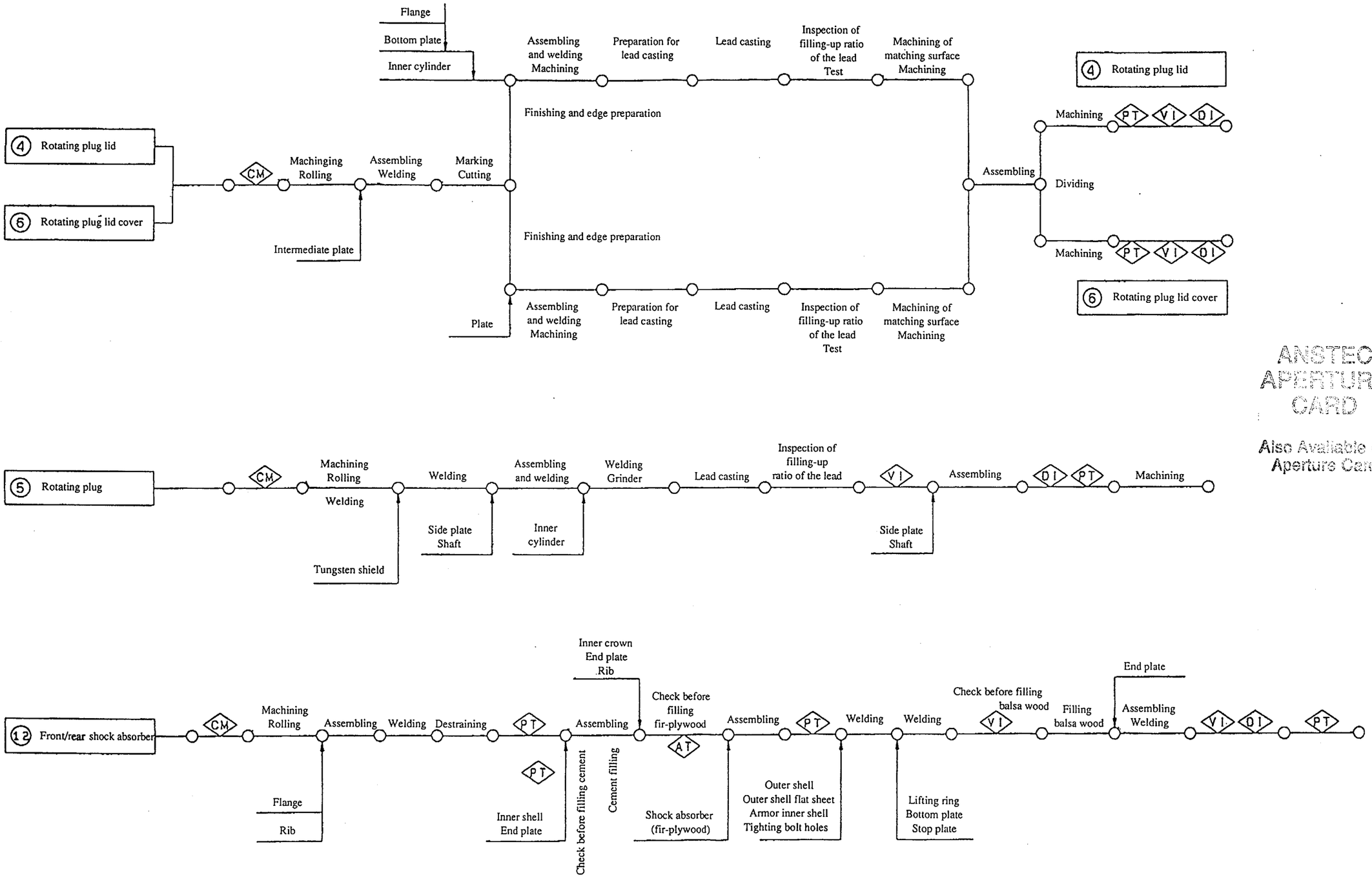

Fig. (III)-2 Manufacturing Procedure for Packaging (2)

ANSTEC APERTURE CARD

Also Available on Aperture Card

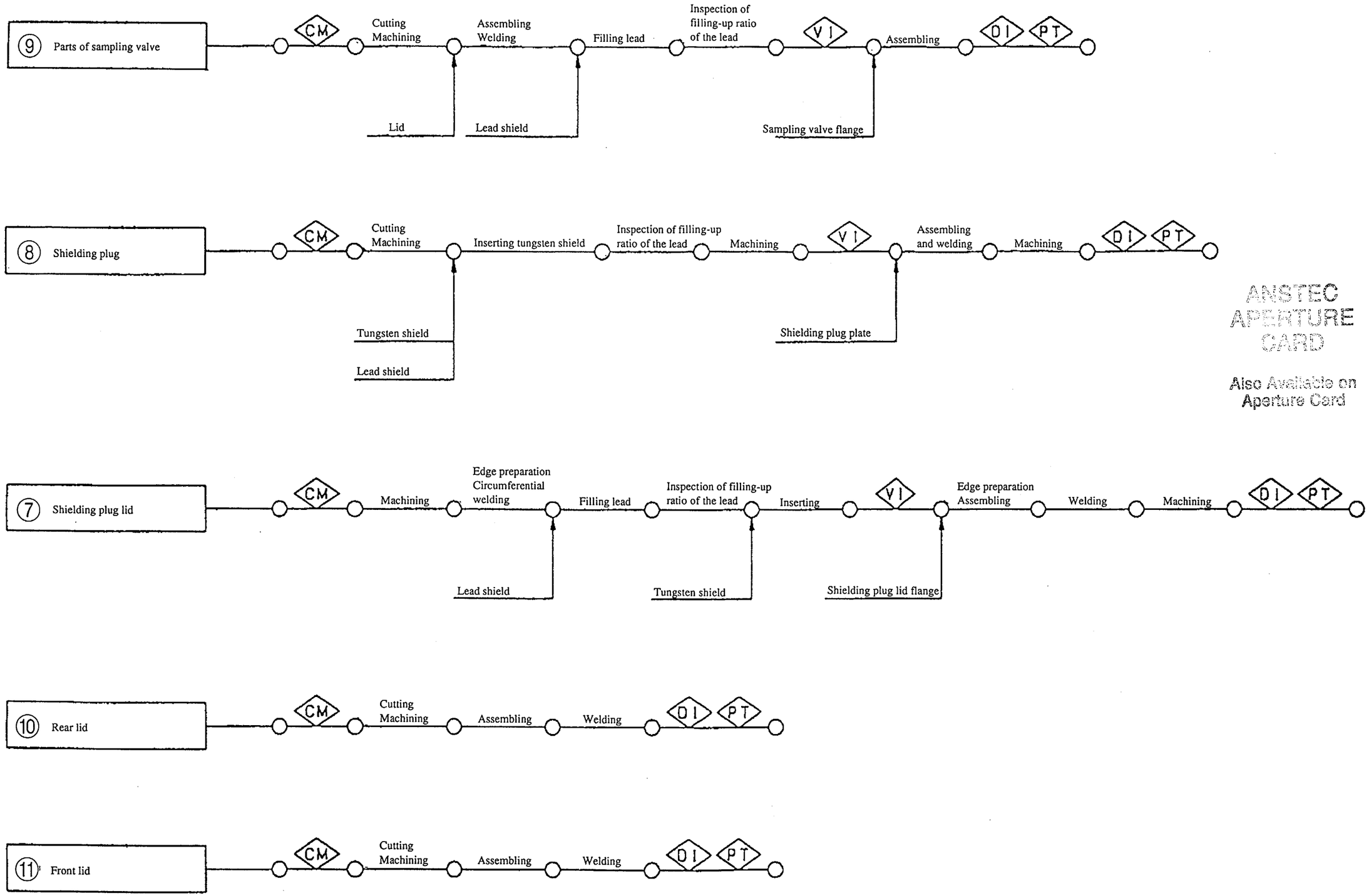

Fig. (III)-3 Manufacturing Procedure for Packaging (3)

ANSTEC APERTURE CARD

Also Available on Aperture Card

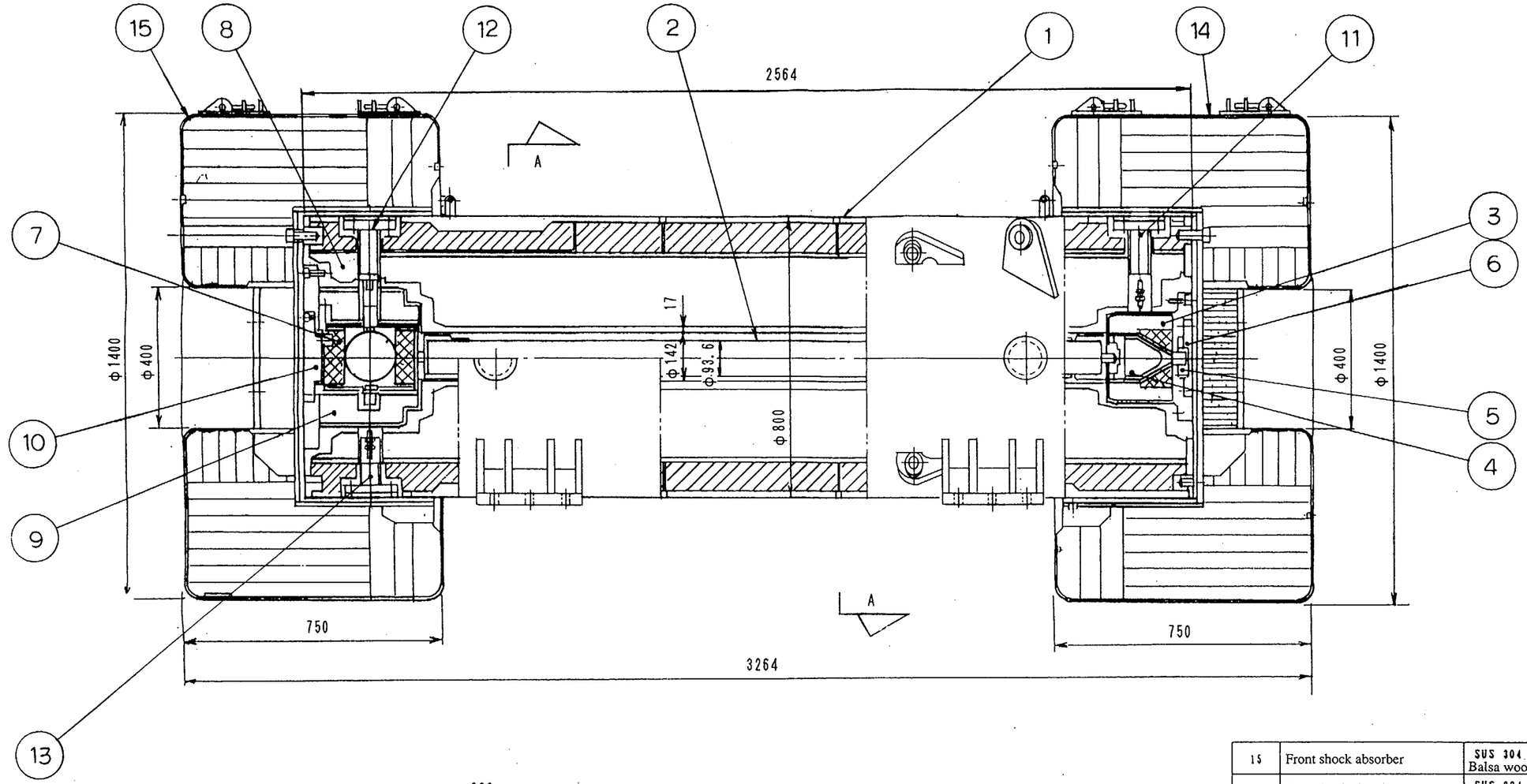

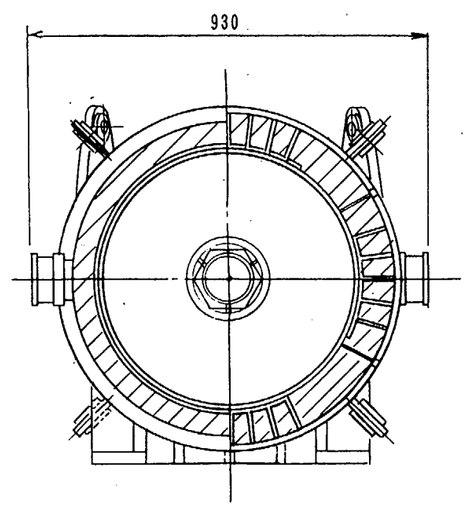

Section A-A

Fig. (III)-4 Package Assembly Drawing

9601260203-44

Ref. no.	Description	Material	Total no.	No./set	Remarks
15	Front shock absorber	SUS 304 Balsa wood	1		
14	Rear shock absorber	SUS 304 Balsa wood	1		
13	Front sampling valve lid	SUS 304 Lead	1		
12	Penetration hole lid	SUS 304 Lead	1		
11	Rear sampling valve lid	SUS 304 Lead	1		
10	Front lid	SUS 304	1		
9	Rotating plug lid cover	SUS 304 Lead	1		
8	Rotating plug lid	SUS 304 Lead	1		
7	Rotating plug	SUS 304 Tungsten Lead	1		
6	Rear lid	SUS 304	1		
5	Locking plate	SUS 304	1		
4	Shielding plug	SUS 304 Tungsten Lead	1		
3	Shielding plug lid	SUS 304 Tungsten Lead	1		
2	Inner container	SUS 304	1		
1	Shell of outer container	SUS 304, Copper SUSF304	1		Resin, Lead Alumina cement

ANSTEC APERTURE CARD

Also Available on Aperture Card

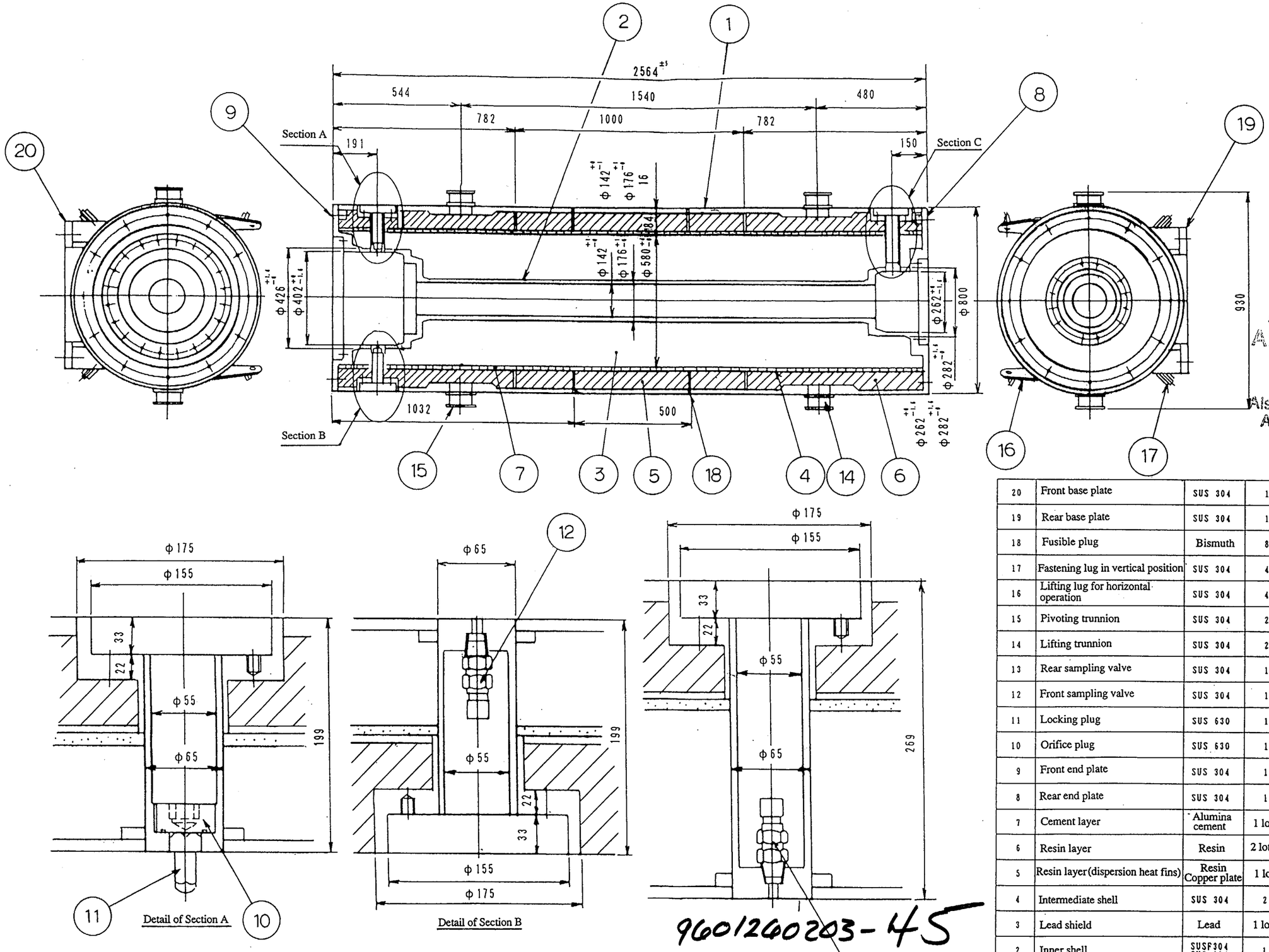

Fig. (III)-5 Outer Container

Ref. No.	Description	Material	no./set	Total no.	Remark
20	Front base plate	SUS 304	1		
19	Rear base plate	SUS 304	1		
18	Fusible plug	Bismuth	8		
17	Fastening lug in vertical position	SUS 304	4		
16	Lifting lug for horizontal operation	SUS 304	4		
15	Pivoting trunnion	SUS 304	2		
14	Lifting trunnion	SUS 304	2		
13	Rear sampling valve	SUS 304	1		
12	Front sampling valve	SUS 304	1		
11	Locking plug	SUS 630	1		
10	Orifice plug	SUS 630	1		
9	Front end plate	SUS 304	1		
8	Rear end plate	SUS 304	1		
7	Cement layer	Alumina cement	1 lot		
6	Resin layer	Resin	2 lots		
5	Resin layer (dispersion heat fins)	Resin Copper plate	1 lot		
4	Intermediate shell	SUS 304	2		
3	Lead shield	Lead	1 lot		
2	Inner shell	SUSF304 SUS 304	1		
1	Outer shell	SUS 304	1		

ANSTEC APERTURE CARD
Also Available on Aperture Card

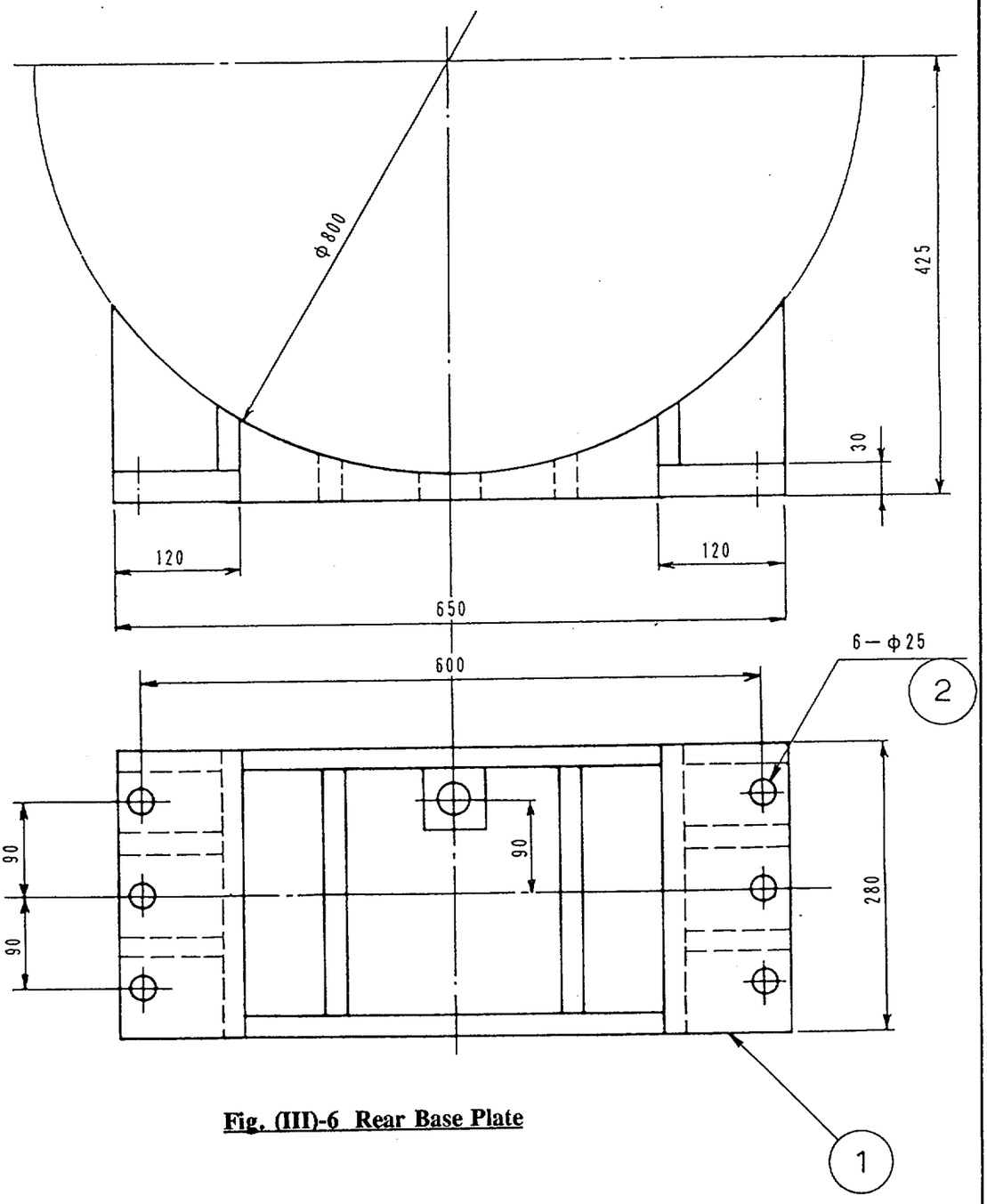

Fig. (III)-6 Rear Base Plate

Ref. no.	Description	Material	No./set	Total no.	Remark
2	Bolt · nut	SCM 435	6		
1	Rear base plate	SUS 304	1		

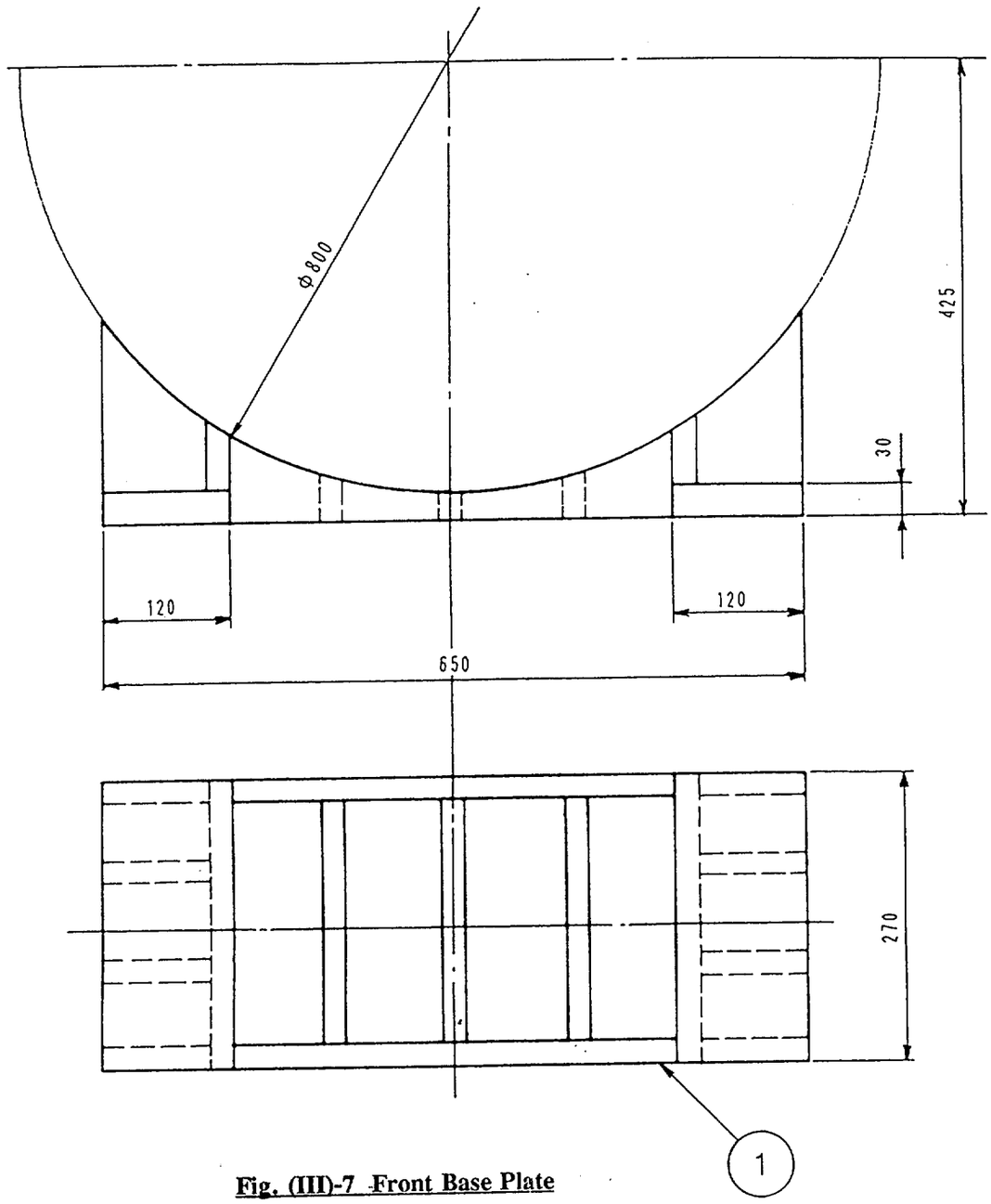

Fig. (III)-7 Front Base Plate

Ref. no.	Description	Material	No./set	Total no.	Remark
1	Front base plate	SUS 304	1		

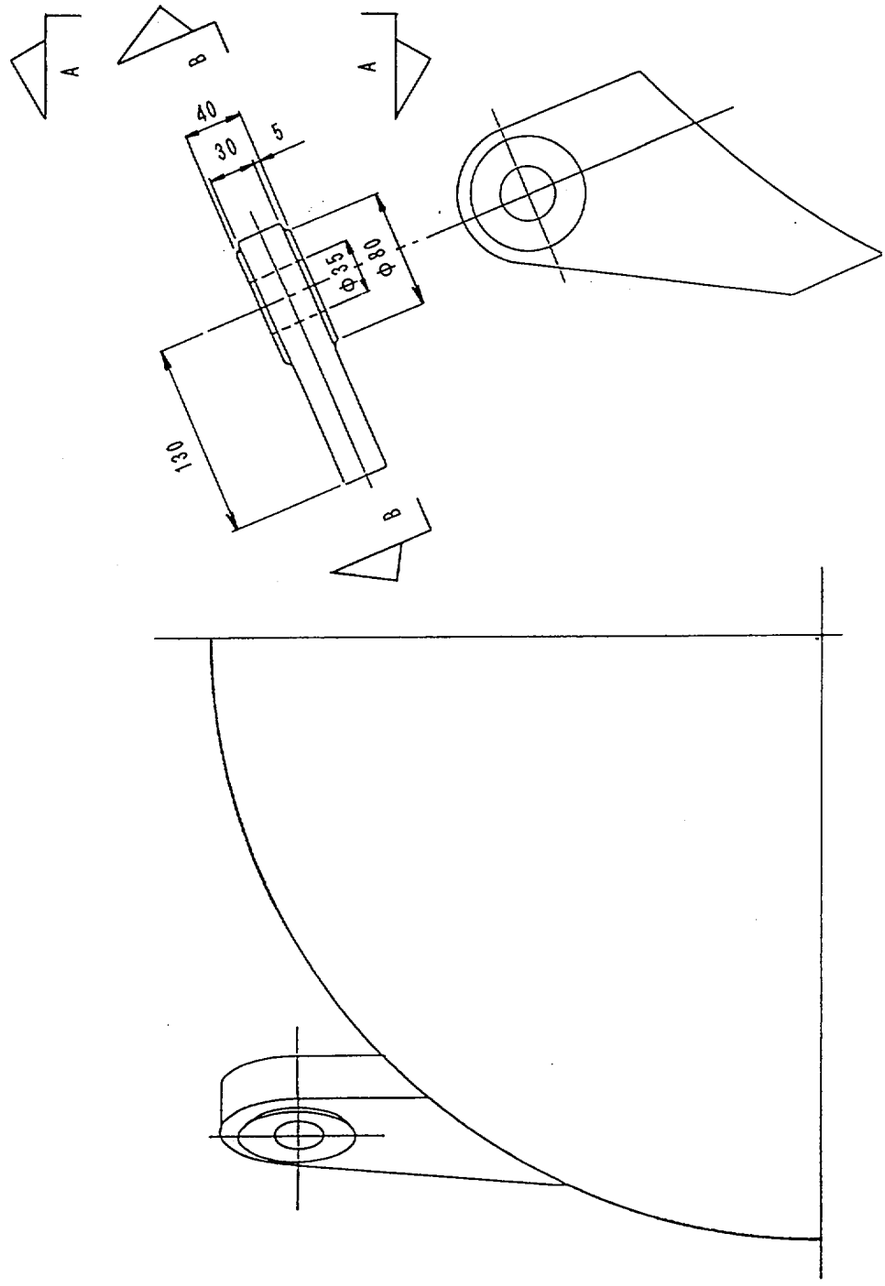

Fig. (III)-8 Lifting Lug for Horizontal Operation

Ref. no.	Description	Material	No./set	Total no.	Remark
1	Lifting lug for horizontal operation	SUS 304	4		

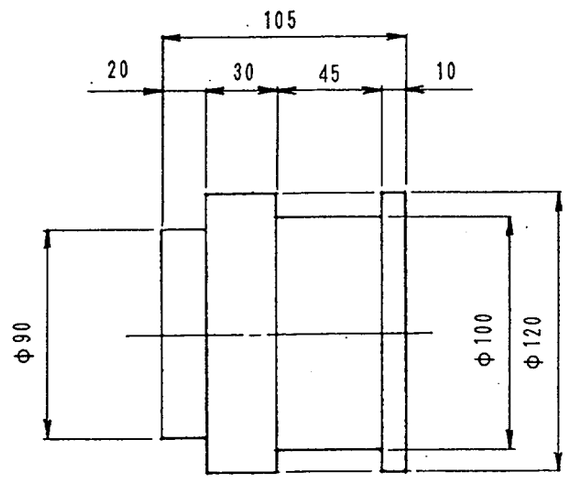

Fig. (III)-9 Lifting Trunnion, Pivoting Trunnion

1	Trunnion	SUS 304	4		
Ref. no.	Description	Material	No./set	Total no.	Remark

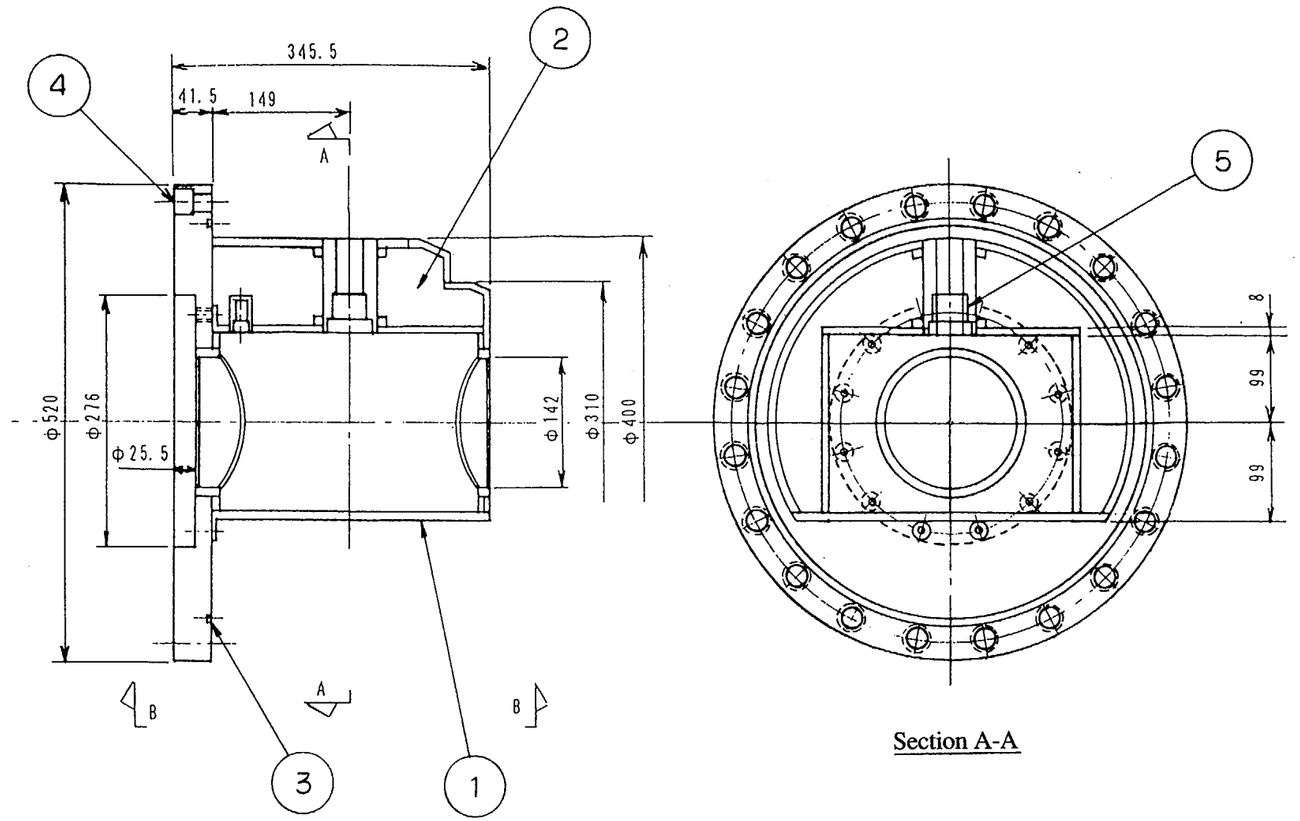

Section A-A

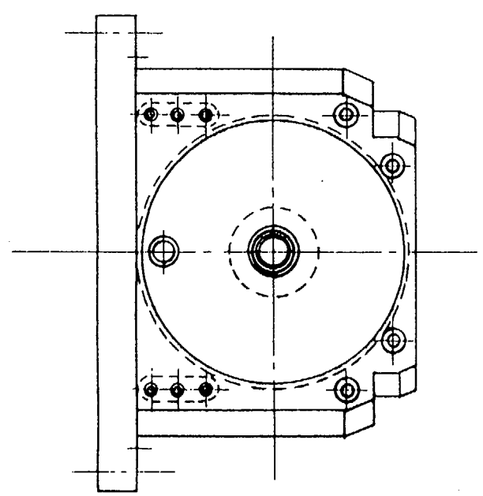

View B-B

Fig. (III)-10 Rotating Plug Lid

9601260203 – 45/01

Ref. No.	Description	Material	no./set	Total no.	Remark
5	Bush	Copper alloy	1		
4	Hexagonal socket head bolt	SUS 630	20		M20×45ℓ
3	O-ring	Fluoro rubber	1		
2	Lead shield	Lead	1 lot		
1	Rotating plug lid unit body	SUS 304 SUSF304	1		

ANSTEC APERTURE CARD
Also Available on Aperture Card

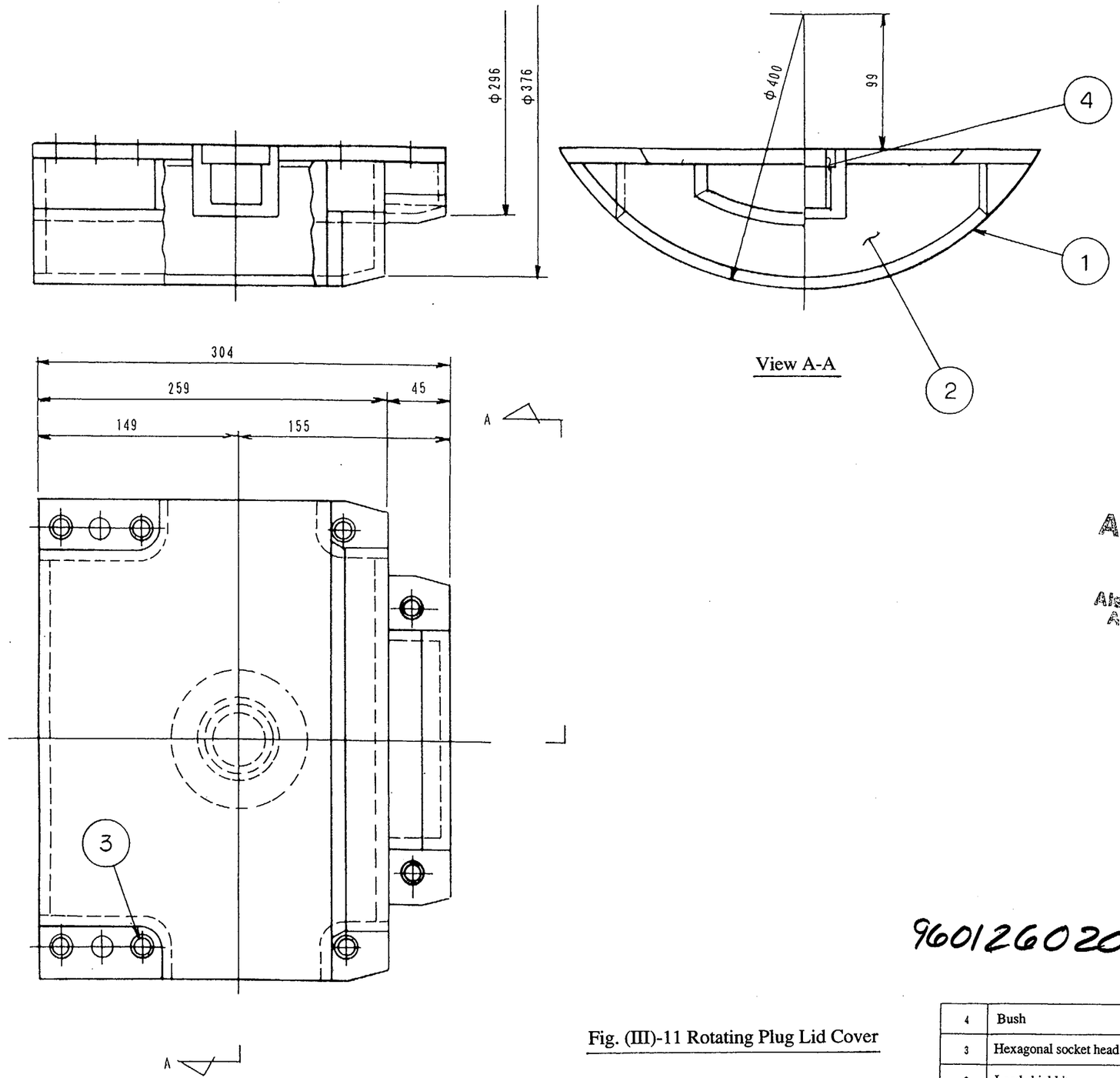

ANSTEC APERTURE CARD

Also Available on Aperture Card

9601260203-45/02

Fig. (III)-11 Rotating Plug Lid Cover

Ref. No.	Description	Material	no./set	Total no.	Remark
4	Bush	Copper alloy	1		
3	Hexagonal socket head bolt	SUS 630	8		
2	Lead shield	Lead	1 lot		
1	Rotating plug lid cover unit body	SUSF304 SUS 304	1		

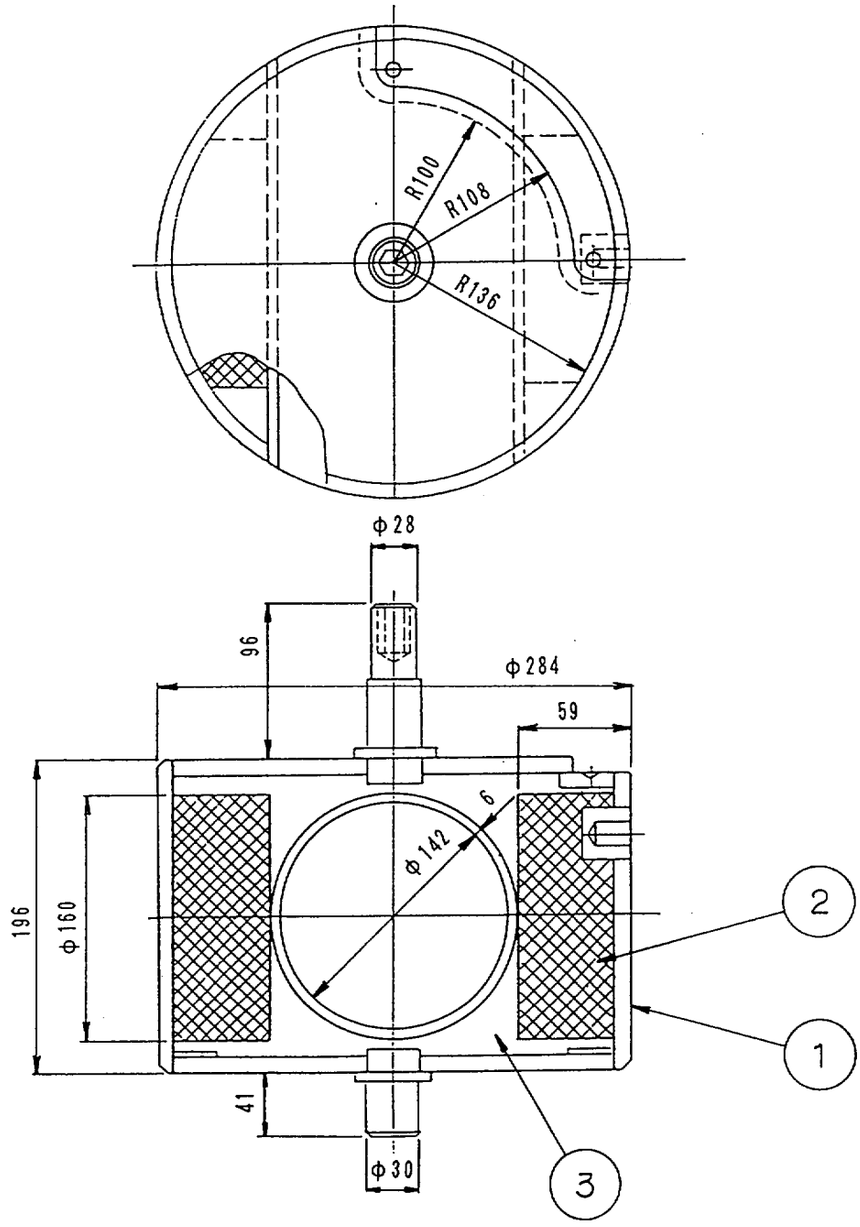

Fig. (III)-12 Rotating Plug

Ref. no	Description	Material	No./set	Total no.	Remark
3	Shield	Lead	1式		
2	Shield	Tungsten alloy	2		
1	Rotating plug unit body	SUS 304	1		

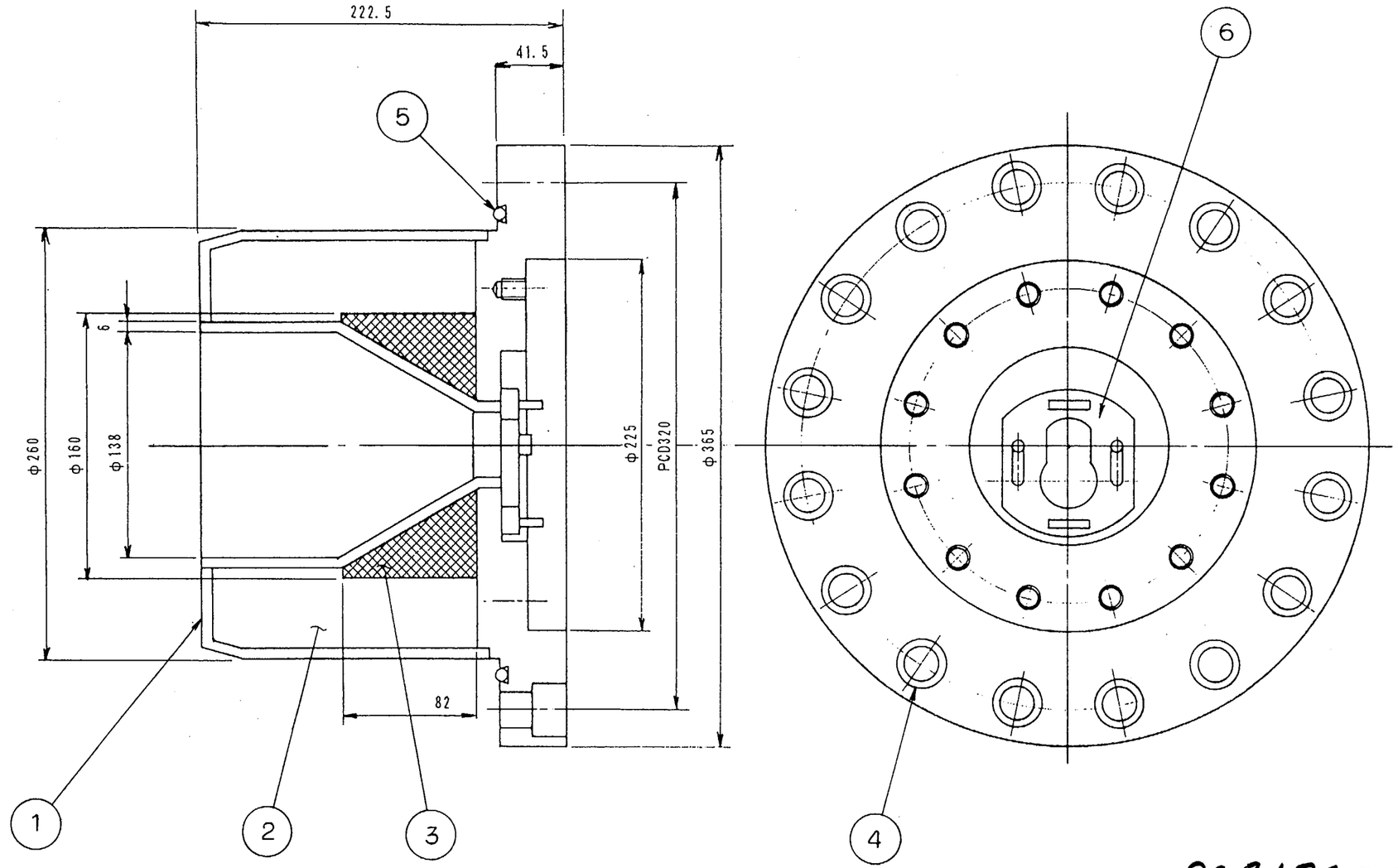

ANSTEC APERTURE CARD

Also Available on Aperture Card

9601260203-45/03

Ref. No.	Description	Material	no./set	Total no.	Remark
6	Locking plate	SUS 304	1		
5	O-ring	Fluoro rubber	1		
4	Hexagonal socket head bolt	SUS 630	16		M20×45ℓ
3	Shield 1	Tungsten alloy	1		
2	Shield	Lead	1 lot		
1	Shielding plug lid unit body	SUS 304	1		

Fig. (III)-13 Shielding Plug Lid

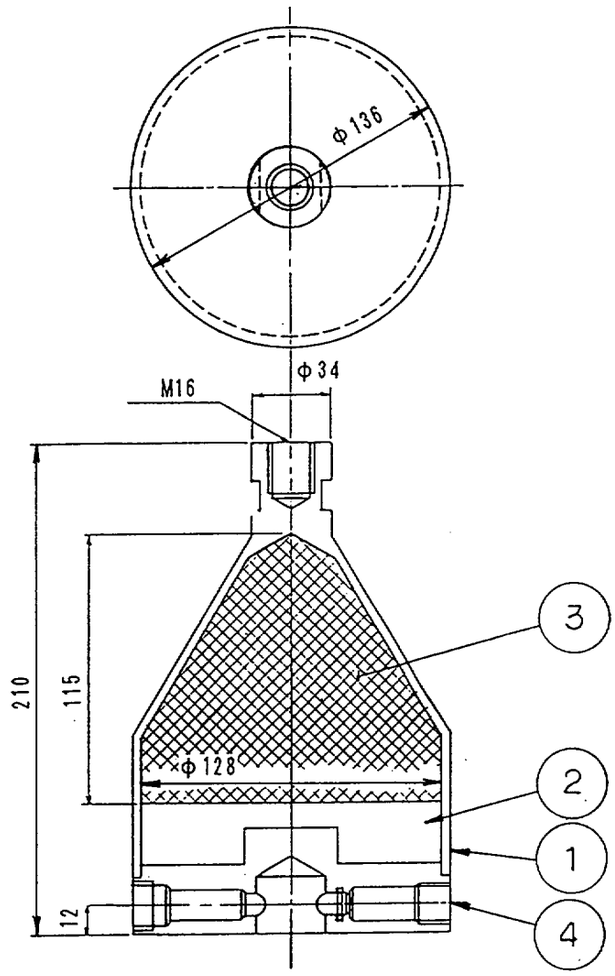

Fig. (III)-14 Shielding Plug

Ref. no.	Description	Material	No./set	Total no.	Remark
4	Lock bolt	SUS 630	1		
3	Shield	Tungsten alloy	1		
2	Shield	Lead	1 lot		
1	Shielding plug outer cylinder	SUS 304	1		

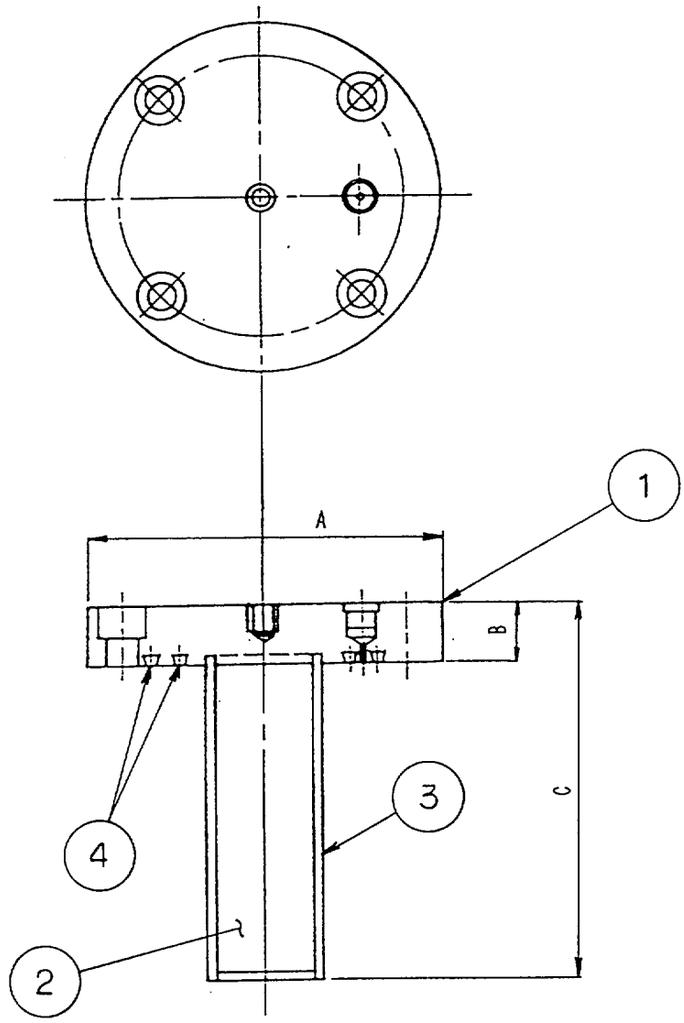

Dimension	Lid of rear sampling valve	Lid of front sampling valve	Penetration hole lid
A	φ 150	φ 150	φ 150
B	25	25	25
C	161	91	148

Fig. (III)-15 Front and Rear Sampling Valve and Penetration Hole Lid

Ref. no.	Description	Material	No./set	Total no.	Remark
4	O-ring	Fluoro rubber	1 lot	3 lot	
3	Cylinder	SUS 304TP	1	3	
2	Shield 1	Lead	1 lot	3 lot	
1	Flange	SUS 304	1	3	

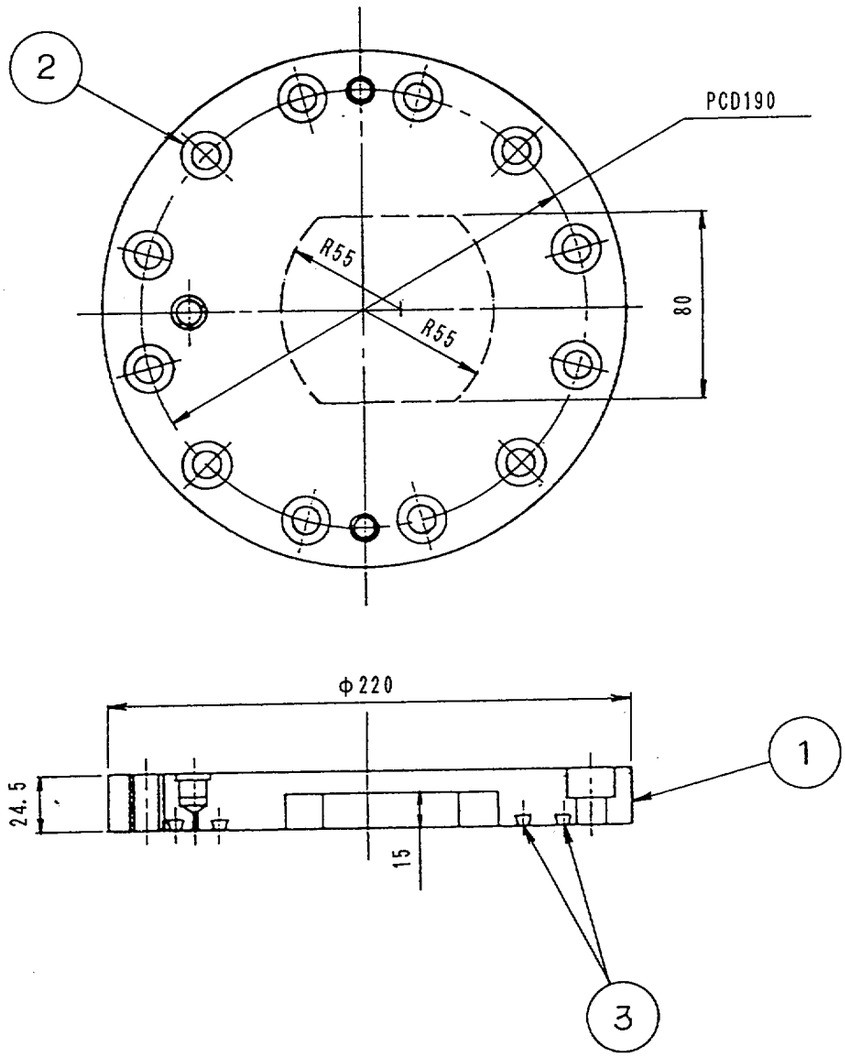

Fig. (III)-16 Rear Lid

Ref. no.	Description	Material	No./set	Total no.	Remark
3	O-ring	Fluoro rubber	1 lot		
2	Hexagonal socket head bolt	SUS 630	12		M12×25ℓ
1	Rear lid	SUS 304	1		

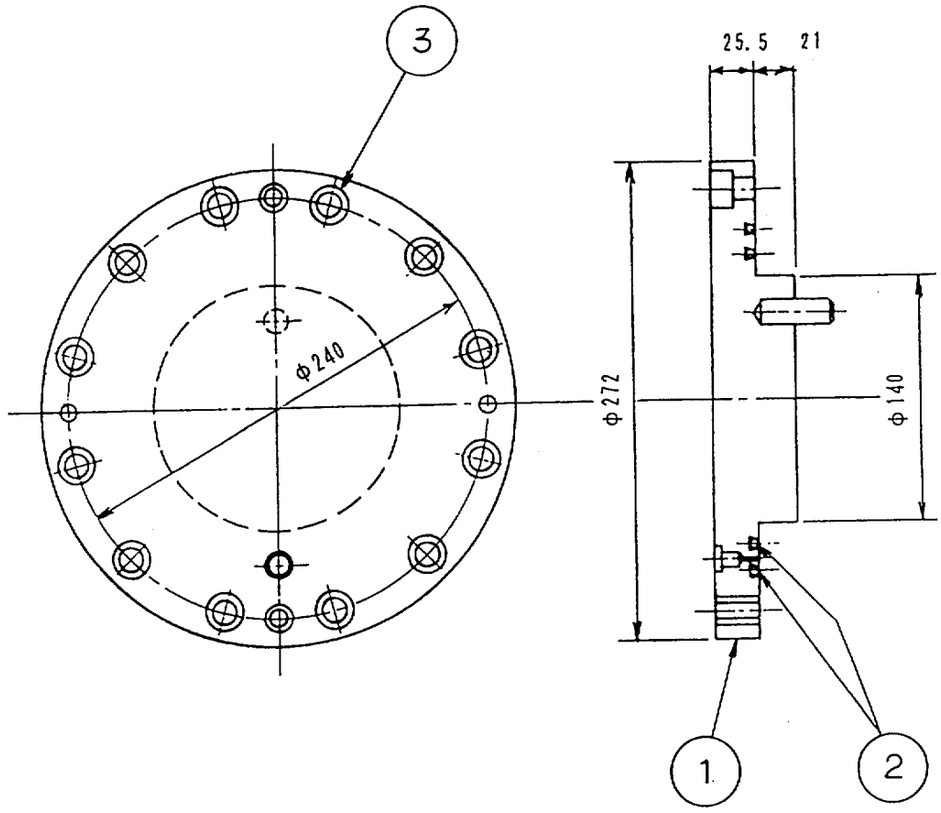

Fig. (III)-17 Front Lid

Ref. no.	Description	Material	No./set	Total no.	Remark
2	Hexagonal socket head bolt	SUS 630	12		M12×25ℓ
3	O-ring	Fluoro rubber	1 lot		
1	Front lid	SUS 304	1		

ANSTEC
APERTURE
CARD

Also Available on
Aperture Card

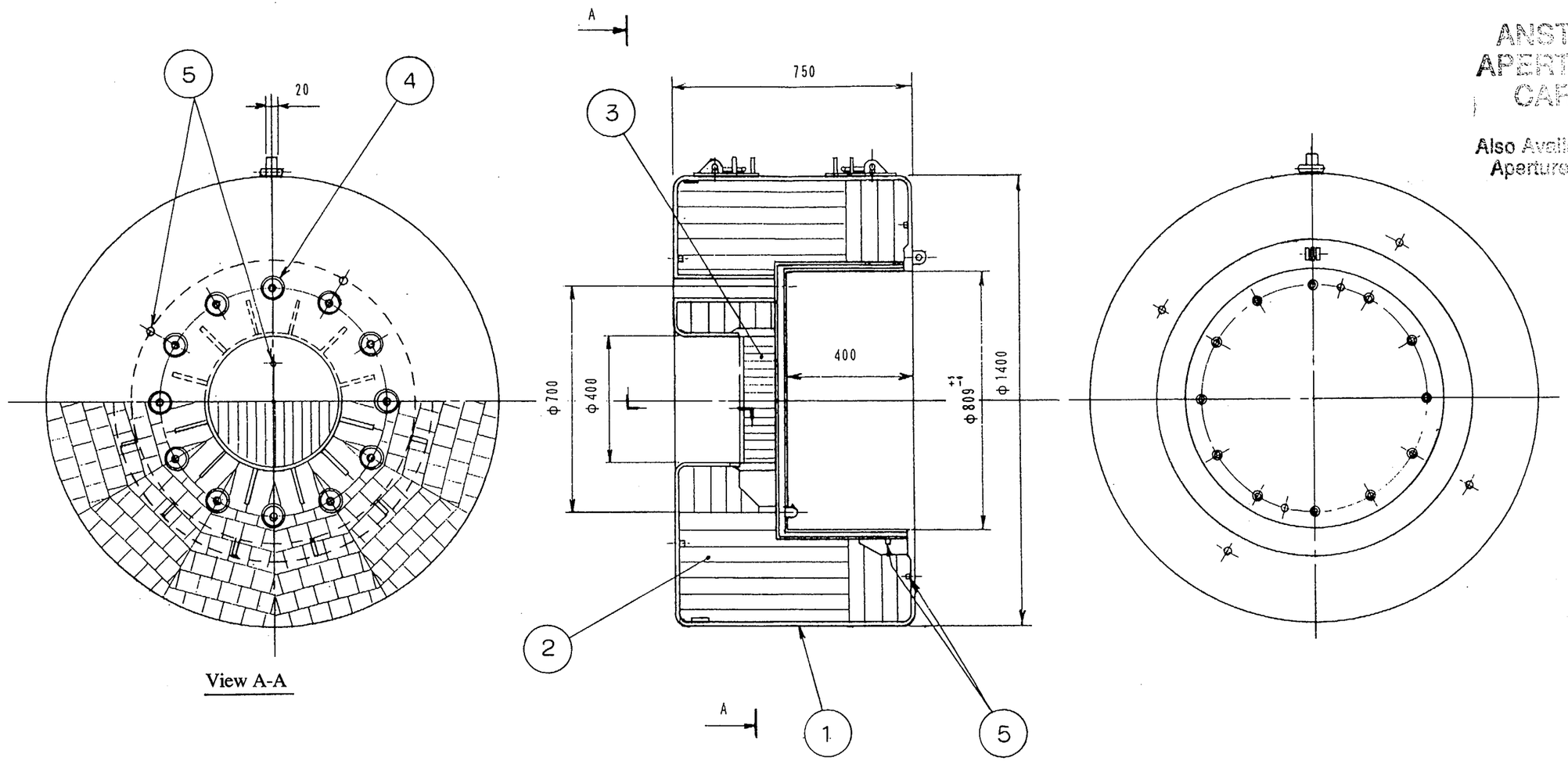

Fig. (III)-18 Front and Rear Shock Absorbers

9601260203 -46

Ref. No.	Description	Material	no./set	Total no.	R
5	Fusible plug	Bismuth	14	28	
4	Hexagonal socket head bolt	SUS 630	12	24	M24×65ℓ
3	Shock absorber	Fir-plywood	1	2	
2	Shock absorber	Balsa wood	1	2	
1	Cover plating material	SUS 304	1	2	

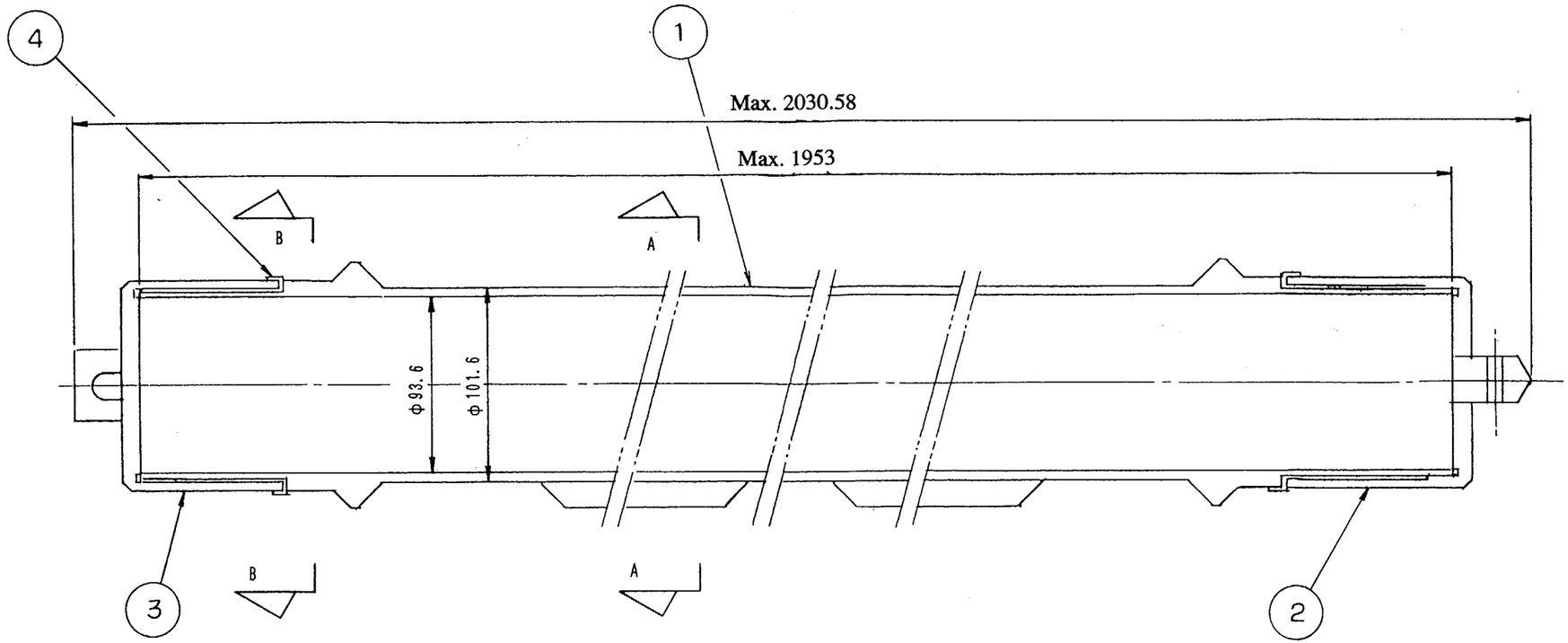

ANSTEC
APERTURE
CARD

Also Available on
Aperture Card

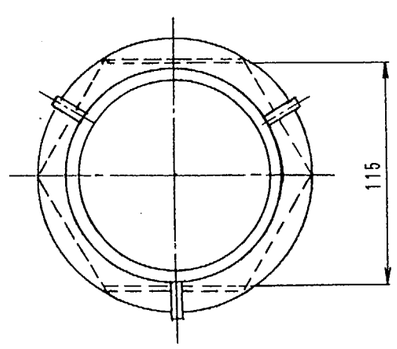

Section A-A

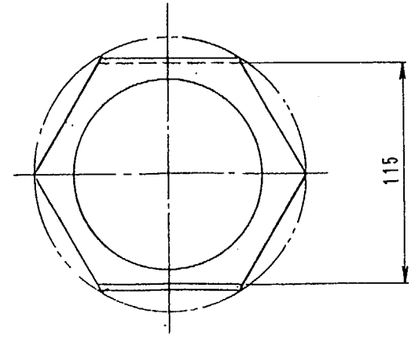

Section B-B

9601260203-47

Fig. (III)-19 Inner Container

Ref. No.	Description	Material	no./set	Total no.	Remark
4	Locking washer	Aluminum alloy, etc.	2		
3	Front cap	SUS 304	1		
2	Rear cap	SUS 304	1		
1	Inner container	SUS 304	1		

ANSTEC
APERTURE
CARD

Also Available on
Aperture Card

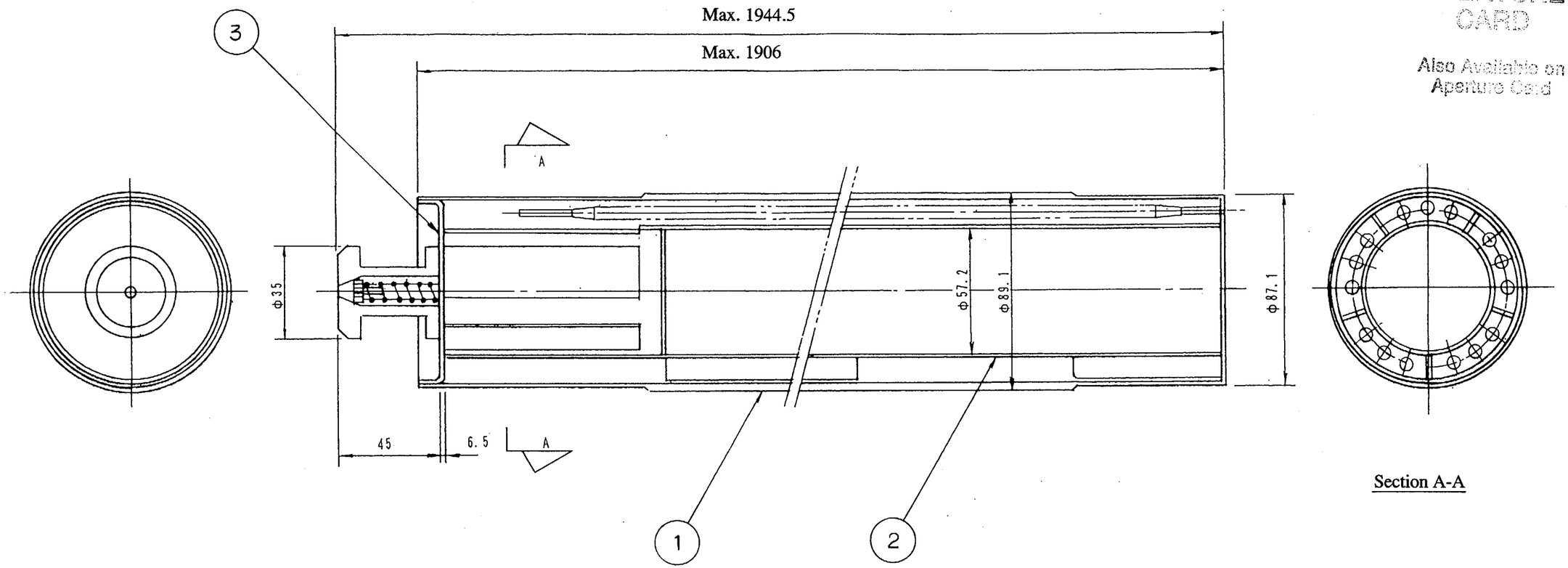

Section A-A

9601260203 – 48

Fig. (III)-20 Fuel Supporting Can I

Ref. No.	Description	Material	no./set	Total no.	Remark
3	Rear lid	SUS 304	1		
2	Inner cylinder	SUS 304	1		
1	Outer cylinder	SUS 304	1		

ANSTEC
APERTURE
CARD

Also Available on
Aperture Card

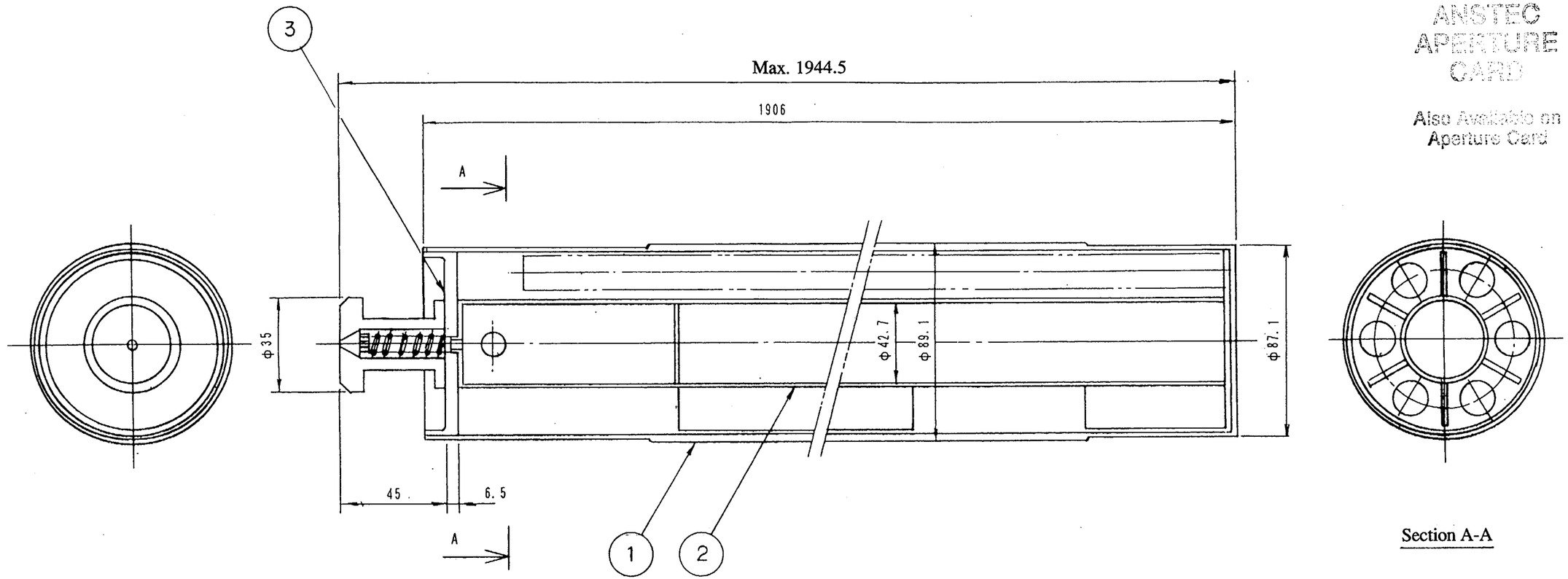

Section A-A

Fig. (III)-21 Fuel Supporting Can II

9601260203 - 49

Ref. No.	Description	Material	no./set	Total no.	Remark
3	Rear lid	SUS 304	1	1	
2	Inner cylinder	SUS 304	1	1	
1	Outer cylinder	SUS 304	1	1	

ANSTEC
APERTURE
CARD

Also Available on
Aperture Card

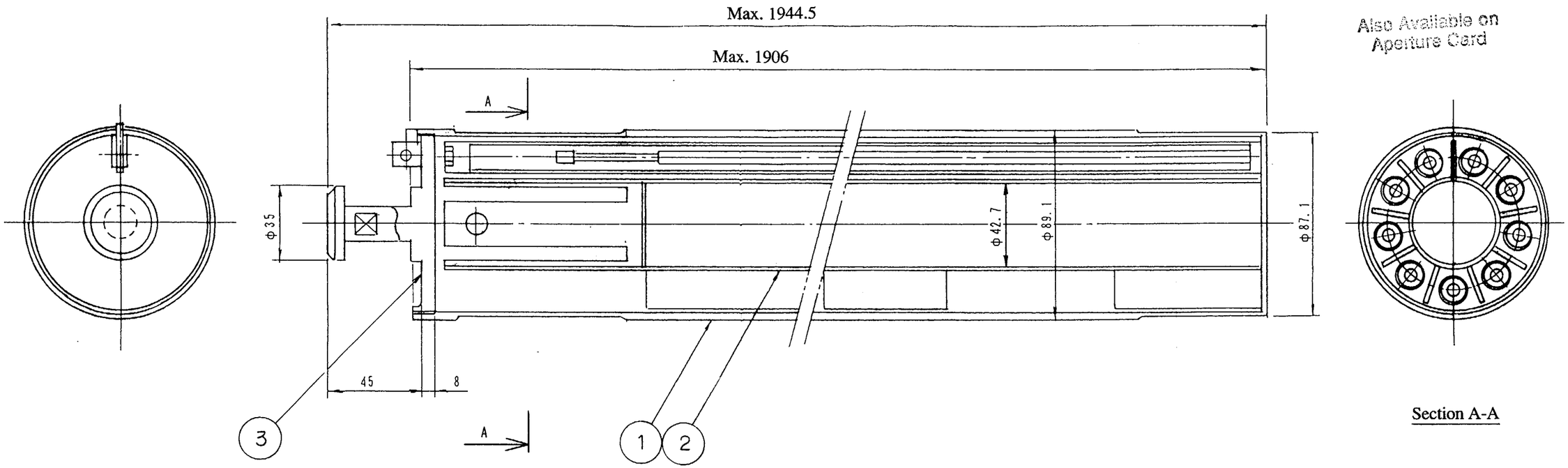

Section A-A

9601260203 -50

Fig. (III)-22 Supporting Can

Ref. No.	Description	Material	no./set	Total no.	Remark
3	Rear lid	SUS 304	1	1	
2	Inner cylinder	SUS 304	1	1	
1	Outer cylinder	SUS 304	1	1	

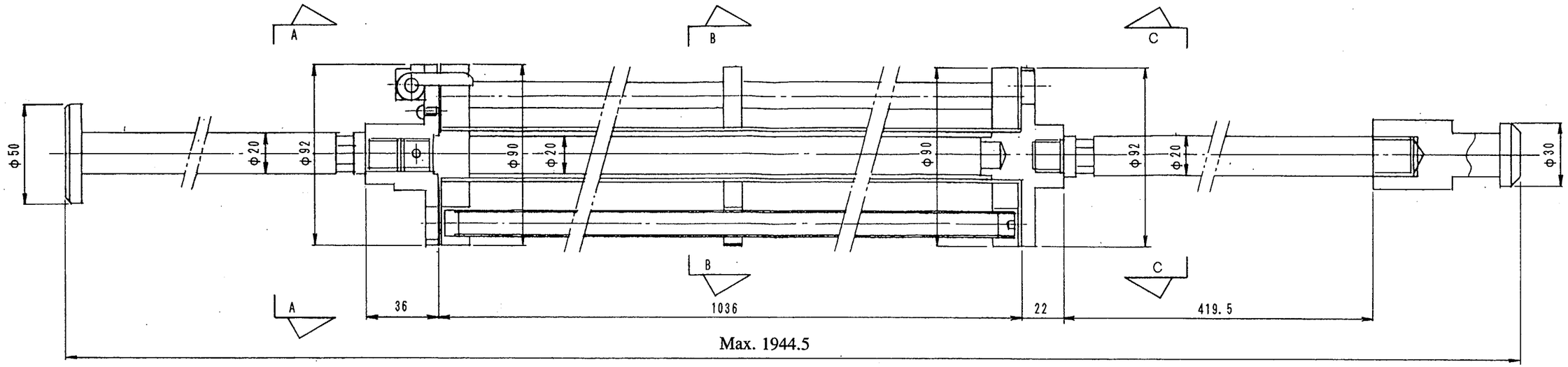

ANSTEC
APERTURE
CARD

Also Available on
Aperture Card

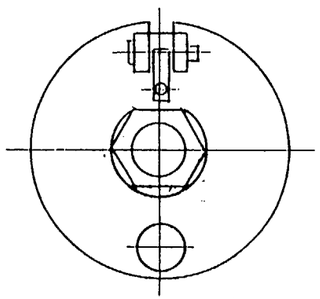

View A-A

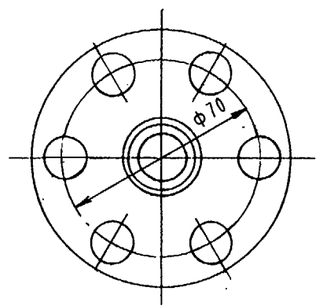

View B-B

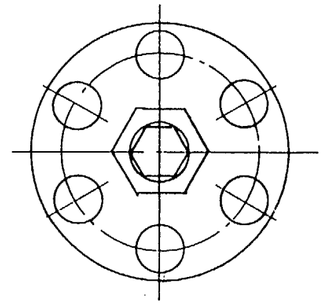

View C-C

9601260203-51

Fig. (III)-23 Rack

Ref. No.	Description	Material	no./set	Total no.	Remark
1	Rack	SUS 304	1		

ANSTEC
APERTURE
CARD

Also Available on
Aperture Card

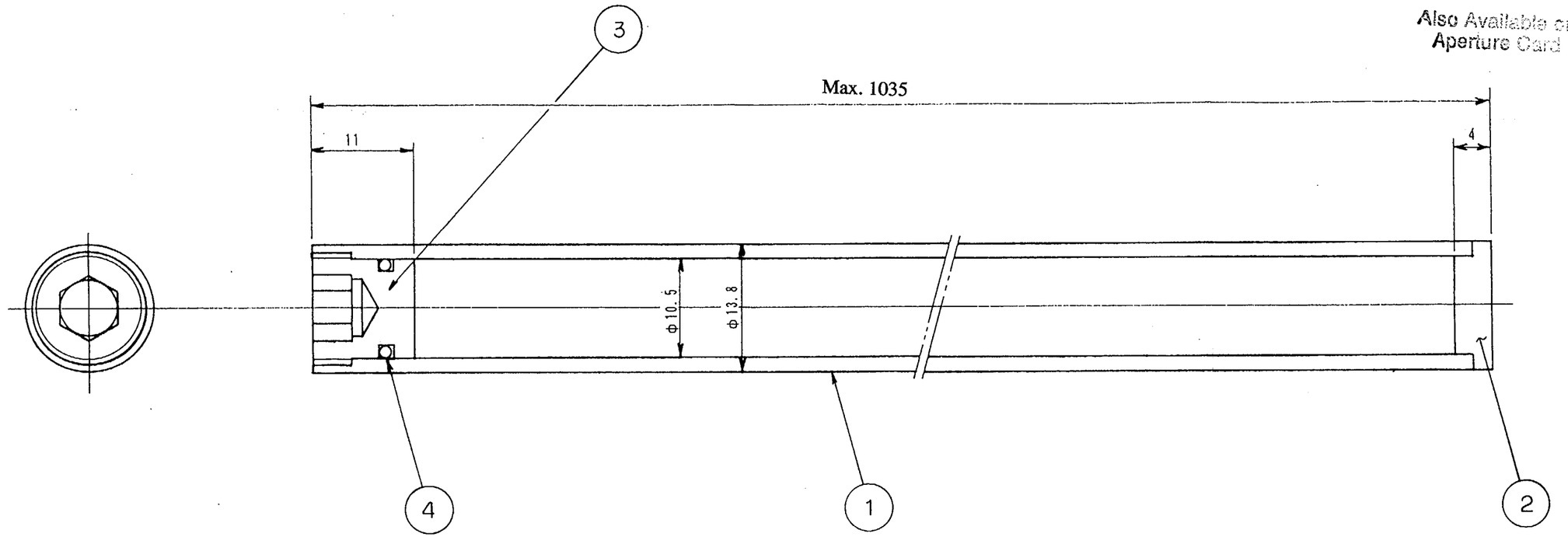

9601260203 -52

Fig. (III)-24 Receiving Tube I

Ref. No.	Description	Material	no./set	Total no.	Remark
4	O-ring	Fluoro rubber	1	6	
3	Plug	SUS 304	1	6	
2	Blind plate	SUS 304	1	6	
1	Receiving tube	SUS 304	1	6	

ANSTEC
APERTURE
CARD

Also Available on
Aperture Card

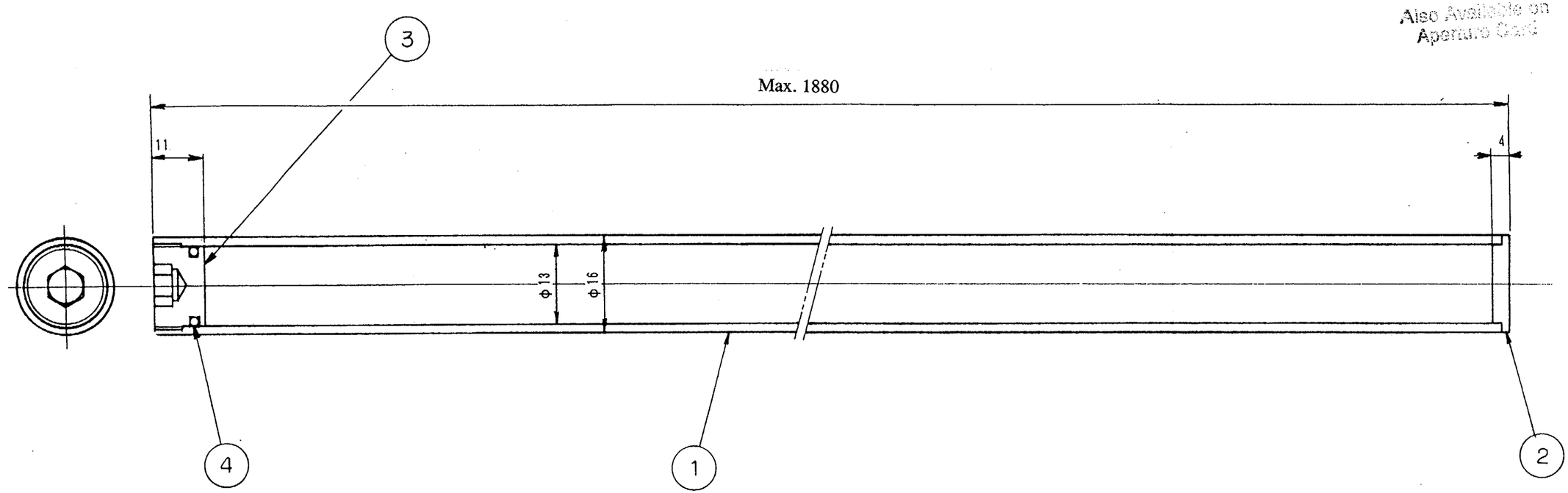

9601260203-53

Fig. (III)-25 Receiving Tube II

Ref. No.	Description	Material	no./set	Total no.	Remark
4	O-ring	Fluoro rubber	1	9	
3	Plug	SUS 304	1	9	
2	End plate	SUS 304	1	9	
1	Receiving tube II	SUS 304	1	9	

A.2 Description of Materials

A.2.1 Sheet materials

This package must be produced using sheet materials according to the standards listed in Table (III)-1 in order to meet the design conditions outlined in Chapter (II) "Safety Analysis of the Nuclear Fuel Package." Table (III)-4 lists the applicable standards for the material characteristics.

The material used is austenitic stainless steel (SUS304) that does not corrode under the conditions of use of the packages. Cutting, drilling, bending, and welding this material does not cause the material characteristics to deteriorate, because machining and welding are practiced in accordance with methods that have been previously used and approved for austenitic stainless steel (SUS304) material (See Chapter (III), sections A.2.8, A.2.9, and A.3).

A.2.2 Tubing

Table (III)-1 lists the applicable standards for the material used. Table (III)-4 lists the characteristics of the materials. Tubing is made of the same austenitic stainless steel (SUS304 or the equivalent) as in A.2.1. Therefore, the mechanical strength and corrosion resistance required by the design are ensured for the tubing of this package.

A.2.3 Forging, and nuts and bolts

The forging material is austenite stainless steel (SUSF304). Therefore, the strength and corrosion resistance required by design are ensured in forging, as in the sheet materials described in A.2.1. Precipitation-hardening stainless steel (SUS630) must be used for bolts. Table (III)-4 lists the characteristics of that stainless steel. Since it is stainless steel, the material is highly corrosion-resistant.

A.2.4 Welding electrodes, bars, and lines

Welding bars that meet the standards outlined in Table (III)-2 must be used in order to provide high-quality welding for materials used during the manufacture of the packaging. Table (III)-4 lists the characteristics of the welding bars.

A.2.5 Special materials

In addition to the general materials described above, special materials listed in Table (III)-3 must be used for the manufacture of the packaging to meet the design conditions described for evaluating the structure, heat, shielding, containment, and criticality in Chapter (II) "Safety Analysis of Nuclear Fuel Package."

(1) γ shield material
Lead in accordance with JISH2105 (Special) standards must be used for the γ shield. Tungsten alloy consisting of high-density sintered tungsten must be used as axial shielding material in part of the γ shield.

The specific gravity of these shielding materials must be measured to make sure that it is not less than the value used for the shield analysis.

Table (III)-1 Applicable Specifications for Main Materials

Section	Material	Applicable Standard	Material Classification	Remarks
1. Body				
Outer shell	304 stainless steel	JISG 4304 SUS 304	Sheet	
Inner shell	Equivalent to 304 stainless steel	SVENSK STANDARD SS14 23 33	Tubing	Sandvik 5R10
Rear box Front box	304 stainless steel	JISG 3214 SUSF 304	Forging material	
Trunnion	304 stainless steel	JISG 4303 SUS 304	Steel bar	
Sampling valve boxes	304 stainless steel	JISG 4303 SUS 304	Steel bar	
Lifting and tie-down lugs	304 stainless steel	JISG 4304 SUS 304	Sheet	
Base plates and others	304 stainless steel	JISG 4304 SUS 304	Sheet	
Intermediate shell plate	304 stainless steel	JISG 4304 SUS 304	Sheet	
2. Lids				
Front and rear lids	304 stainless steel	JISG 4304 SUS 304	Sheet	
Front and rear sampling valve lids and penetration hole lid	304 stainless steel	JISG 4304 SUS 304	Sheet	
Rotating plug lid and rotating plug lid cover	304 stainless steel 304 stainless steel	JISG 4304 SUS 304 JISG 3214 SUSF 304	Sheet Forging material	
Shielding plug lid	304 stainless steel 304 stainless steel	JISG 4304 SUS 304 JISG 3214 SUSF 304	Sheet Forging material	
Rotating plug	304 stainless steel Equivalent to 304 stainless steel	JISG 4304 SUS 304 SVENSK STANDARD SS14 23 33	Sheet Tubing	Sandvik 5R10
Shielding plug	304 stainless steel	JISG 4303 SUS 304	Steel bar	
3. Inner container				
Inner container pipe	304 stainless steel 304 stainless steel	JISG 3459 SUS 304 TP JISG 4303 SUS 304	Tubing Steel bar	
Inner container cap	304 stainless steel	JISG 4303 SUS 304	Steel bar	
4. Shock absorber				
Inner, outer, and intermediate shells, and flat sheet for each shell	304 stainless steel 304 stainless steel	JISG 4304 SUS 304 JISG 4305 SUS 304	Sheet Sheet	
Flange and end plate	304 stainless steel	JISG 4304 SUS 304	Sheet	
Bolt tightening hole pipe	304 stainless steel	JISG 3459 SUS 304 TP	Tubing	
5. Bolts and locking pins	630 stainless steel	JISG 4303 SUS 630	Steel bar	

Table (III)-2 Welding Materials

Welding Method	Material	Applicable Standard
Cover metallic electrode welding (SMAW)	SUS 304 Stainless steel	JIS Z 3221 D308L
Gas tungsten electrode welding (GTAW)	SUS 304 Stainless steel	JIS Z 3321 Y308L
Gas tungsten electrode welding (GTAW)	SUS 304 C1020P	(Manufacturer's standard) T-Cu-1

Table (III)-3 Special Materials

Name of Parts Used	Material	Applicable Standard	Material Characteristic
γ shield material	Lead, tungsten alloy	JIS H 2105 (special) (Manufacturer's standard)	Lead: purity 99.99% or more, specific gravity 11.3 or more Tungsten: purity 95% or more, specific gravity 18.0 or more
Neutron shield material	Resin	(Manufacturer's standard)	Composition ratio Resin (54-52%), aluminium hydroxide (15-13%) polypropylene (26-24%), antimonyoxide (4-1%), zinc borate (6-4%), and others Specific gravity 1.1 or more
Heat-insulating material	Alumina cement	(Manufacturer's standard)	Mixture ratio Alumina cement (75-70%) and water (30-25%)
Shock absorber material	Balsa wood	(Manufacturer's standard)	Specific gravity: 0.2 - 0.3, water: (0 - 18%)
	Fir-plywood	(Manufacturer's standard)	Specific gravity: 0.5 or more
Heat dispersion fins	Copper	JIS H 3100 C1020P	Copper purity: 99.96% or more; quality class: 0
Fusible plug	Bismuth	(Manufacturer's standard)	Bismuth: purity 99.9% or more, melting point 271°C or more

Table (III)-4 Characteristics of Main Materials

Classification	Applicable Standard or Material Name	Tensile Strength (min.) N/mm²	Yield Point (min.) N/mm²	Elongation (min.) %	Contraction of Area (min.) %	Hardness (max.) H_B	Chemical Component %										
							max. C	max. Mn	max. P	max. S	max. Si	Cr	Ni	max. Mo	max. Cu	Others	
General materials	JISG 4304-SUS 304	519	205	40	-	187	0.08	2.00	0.040	0.030	1.00	18.00 - 20.00	8.00 - 10.50	-	-	-	
	JISG 3214-SUSF 304	519	205	45	50	187	0.08	2.00	0.040	0.030	1.00	18.00 - 20.00	8.00 - 11.00	-	-	-	
	JISG 3459-SUS 304TP	519	205	Longitudinal 35 Lateral 25	-	-	0.08	2.00	0.040	0.030	1.00	18.00 - 20.00	8.00 - 11.00	-	-	-	
	JISG 4303-SUS 304	519	205	40	60	187	0.08	2.00	0.040	0.030	1.00	18.00 - 20.00	8.00 - 10.50	-	-	-	
	JISG 4303-SUS 630	931	725	16	50	277	0.07	1.00	0.040	0.030	1.00	15.50 - 17.50	3.00 - 5.00	-	3.00 - 5.00	Nb+Ta 0.15 - 0.45	Mechanical properties are in the H1150 state.
	SVENSK STANDARD SS14 23 33	490 - 686	205	(35)		200	0.07	2.0	0.045	0.030	1.5	17.0 - 20.0	8.0 - 11.0				SANDVIK 5R10
Welding materials	JISZ 3221 D308L	509	-	35	-	-	0.04	2.50	0.040	0.030	0.90	18.00 - 21.00	9.00 - 12.00	-	-	-	
	JISZ 3321 Y308L	575	-	45.8	-	-	0.03	1.0 - 2.5	0.03	0.030	0.06	19.50 - 22.0	9.00 - 11.00	-	-	-	
	Manufacturer's standard (T-Cu-1)							0.3 - 0.60			0.10 - 0.30				Bal.		Pure copper

(2) Neutron shield material

For the neutron shield material, polyester resin must be used to fill the overall longitudinal clearance between the outer shell and the inner shell. In terms of weight ratio, the material must consist of resin (54-52%), aluminium hydroxide (15-13%), polypropylene (26-24%), antimonyoxide (4-1%), zinc borate (6-4%), a small amount of glass chop, accelerator, and hardening agent.

The heat-proof polyester resin makes the material heat-proof. In addition, antimonyoxide and zinc borate give the material a flame-resistant characteristic. The main components affecting the neutron shielding are resin and polypropylene that contain a large amount of hydrogen.

(3) Fin material

Oxygen-free copper (JIS H3100, C1020P) with a high thermal conductivity is used for the heat dispersion fins that are installed to increase heat dispersion.

(4) Shock absorber materials

The front and rear shock absorbers are filled with shock-absorbing materials to diminish shocks to the packaging. For this purpose balsa wood and fir-plywood are used. Such materials are used to diminish shocks, and also serve as heat-insulating materials.

Sawed balsa wood (rectangular lumber of approximately 50 (W) x 90 (H) x 1000 (L) mm) must be purchased and subjected to a specific gravity test and the moisture content test. Then, the balsa wood must be treated to make it flame resistant. Flame resistance must be provided by the so-called Bethell process. With this method the balsa wood material is put in a container which is then vacuumed. The vacuumed container is charged with a saturated aqueous solution of boric acid and borax. The container is then pressurized to impregnate the balsa wood with the solute. After impregnation, the balsa wood is dried and subjected to a moisture content test.

Fir-plywood is equal to plywood (3/4" x 48" x 96"). DOUGLAS FIR must be used as the firplywood material.

(5) Fusible plug (bismuth)

The fusible plug is a plug cast with bismuth that fuses to prevent excessive pressure in the resin layer, cement layer, and shock absorber in the receptacle body under accident test conditions (fire or accident). This bismuth must have purity of 99.9% or more, and a fusing point of 271°C.

(6) Heat-insulating material (alumina cement)

The periphery of the lead shield and the inside of the shock absorber of the packaging body are filled with alumina cement to insulate the packaging from heat under accident test conditions (fire or accident). Manufacturer's standard alumina cement (75-70%) must be mixed and kneaded with water (30-25%) to prepare the heat-insulating material that is then poured into the required places and hardened. Thereafter, end plates and other materials are welded to the insulator to make it air-tight.

A.2.6 Certified material test report

The following items must be entered in the certified material test report.

(1) Name of the manufacturer (or abbreviation)
(2) Date of issuance of the certified material test report
(3) Number of the certified material test report
(4) Specifications or applicable standard
(5) Type of material (or abbreviation)
(6) Charge No. or lot No.
(7) Dimensions and weight
(8) Chemical analysis table
(9) Mechanical test results
(10) Heat treatment conditions, as required
(11) Any other requested items

For the chemical analysis and the mechanical test, the requirements of the applicable standard may also be entered as the criteria. The certified material test report is accepted together with the tested material, if the report meets the requirements of the applicable standard and each item is proved to be true when collated with the material.

A.2.7 Repair of defects in the materials

Defects in the materials must be repaired in accordance with JIS G3193 as follows.

Minor defects such as scratches in the material that are generated during the manufacturing process or machining must be smoothed out with a grinder. The repaired material must then be subjected to a penetrant inspection to make sure that all defects have been removed. If the thickness of the repaired part is less than the design thickness, such a part must be padded by welding and then finished with a grinder to be even with the other part of the material. The repaired material must be then subjected to a penetrant inspection.

A.2.8 Cutting of materials

A material cutting drawing must be prepared. In accordance with that drawing, the material must be marked. After the marked dimensions have been checked, the material must be cut as marked. Sheet materials must be cut using a shearing machine, grinder, plasma cutter, and lathe.

Raw pipes and bars must be cut with a grinder, plasma cutter, and lathe. After the plasma cutter has been used, the thermal effect on the cut end of a material must be removed by cutting off at least 5 mm at the end with a grinder or by machining.

The plasma cutter cuts materials with a hot plasma jet using argon gas as the operating gas. A plasma cutter has no thermal effect on the materials when the affected part is cut off.

A.2.9 Forming of materials

The shells of the outer container body and the shock absorber are formed by using a cold bending roller. Flat sheet (corner bending) of the armor steel plate of the shock absorber is carried out by cold spinning (a steel plate is passed and rotated through the guide roller and bent bit by bit). A press is used to bend the heat dispersion fins.

A.3 Welding

A.3.1 Welding method and materials

The welding of this packaging can be divided by type of base metal into two types; stainless steel (SUS 304) - stainless steel (SUS 304) and copper (JIS H3100-C1020P) - stainless steel (SUS 304). Table (III)-5 lists the welding methods. Note that the method of welding "stainless steel - stainless steel" has passed the test established by the Ministry of International Trade and Industry. Stainless steel (SUS 304) - heat dispersion fins (JIS H3100-C1020P) must be welded by gas tungsten arc welding. Welding rods must be T-Cu-1.

A.3.2 Welding machine management and welder qualification

The AC arc welding machine and the DC arc welding machine must be periodically inspected, at least once a year, to maintain the welding machines. Such inspection must be conducted in accordance with the inspection table. The main inspection items of the table are as listed below.

Insulation resistance

Status of contacts of the tap-switching unit and its operation status

Contact disconnection of the ground

State of cabtyre cable coating

State of the holder

State of the cable connector

State of the grounding clamp (e.g. damage)

State of the welding torch (e.g. damage)

Current correction

Others

A. Table (III)-5 List of Method of Welding Procedures

A = (with back strap) and double-sided weld
T = All TIG welding
T_{FB} + A = (with back strap) first layer: TIG welding, other layers: arc welding
T_F + A = first layer: TIG welding, other layers: arc welding
T_B = (with back strap) All TIG welding

Welding Method	MITI Certificate No.	Base Metal Classification and Material	Range of Welding Thickness (mm)	Welding Position	Weld Metal	Welding Material				Preheat Temperature (°C)	Welding Machine	Layers	Welding Method
						Welding Rod Classification	TIG						
							Filler Metal Classification	Shielding Gas	Back Shield				
SMAW	45 KO 860	P-8+P-8 SUS304	≤19	f・v o・h	A-7	F-5	-	-	-	-	DC	Multi-layer	A
GTAW + SMAW	46 KO 6356	P-8+P-8 SUS304	≤24	f	A-7	F-5	R-7	Argon gas	Yes	-	DC	Multi-layer	T_F+A
GTAW + SMAW	46 KO 6355	P-8+P-8 SUS304	≤24	f	A-7	F-5	R-7	Argon gas	Yes	-	DC	Multi-layer	T_F+A
GTAW + SMAW	46 KO 12013	P-8+P-8 SUS304	≤24	f	A-7	F-5	R-7	Argon gas	-	-	DC	Multi-layer	T_{FB}+A
GTAW	46 KO 12012	P-8+P-8 SUS304	≤24	f	A-7	-	R-7	Argon gas	-	-	DC	Multi-layer	T_B
SMAW	47 KO 1651	P-8+P-8 SUS304	≤40	f	A-7	F-5	-	-	-	-	DC	Multi-layer	A
GTAW + SMAW	47 KO 4316	P-8+P-8 SUS304	≤40	f	A-7	F-5	R-7	Argon gas	-	-	DC	Multi-layer	T_{FB}+A
GTAW	49 SH-10570	P-8+P-8 SUS304	≤19	f	A-7	-	R-7	Argon gas	-	-	DC	Multi-layer	T
GTAW	-	-	-	f	-	-	T-Cu-1	Argon gas	-	-	DC	Multi-layer	T_B

To be properly qualified, a welder must pass the Japanese Welding Operator Examination Test given by the Minister of the MITI (or its delegated proxy, Heat Engine Association, a foundation juridical person) as required by the Electrical Enterprise Law, Article. 46.

A.3.3 Description of the main welding items

(1) Maximum allowable temperature

Since the normal welding method is used, the maximum allowable temperature is not particularly specified. The difference in temperature between the two layers must be 150°C or less.

(2) Main dimensions and groove forms

Table (III)-6 lists the main dimensions and groove forms. Fig. (III)-26 shows the position of the grooves.

A. Table (III)-6 Weld Groove

Main Weld	Welding Method	Base Metal Material	Dimensions and Groove Forms	SN
Inner shell and box	First layer: TIG welding Other layers: Cover electrode welding	SUS 304 | SUSF304	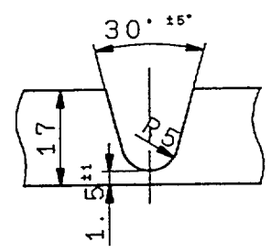	1
Longitudinal joint of the outer shell	Cover electrode welding	SUS 304	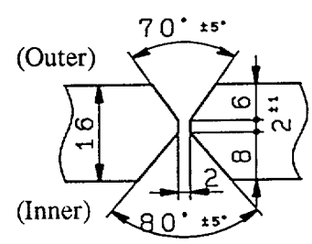	2
Longitudinal joint of the outer shell	Cover electrode welding	SUS 304	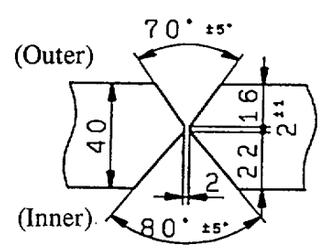	3

Main Weld	Welding Method	Base Metal Material	Dimensions and Groove Forms	S N
Circumferential joint between the outer shells	Cover electrode welding	SUS 304 | SUSF304	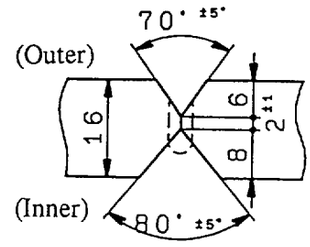	4
Outer shell and trunnion	Cover electrode welding	SUSF304 | SUS 304	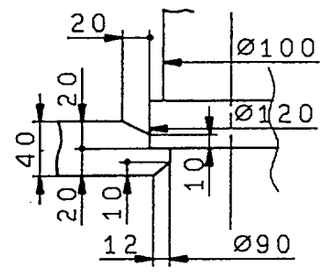	5
Rear sampling valve box and outer shell	First layer: TIG welding Other layers: Cover electrode welding	SUS 304 | SUS 304	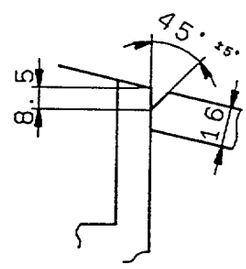	6
Rear sampling valve box and rear sampling valve cylinder	TIG welding	SUS 304 | SUS 304	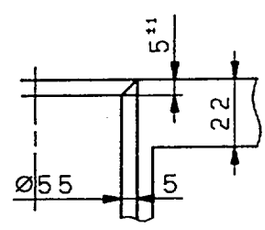	7
Rear box and rear sampling valve cylinder	TIG welding	SUSF304 | SUS 304	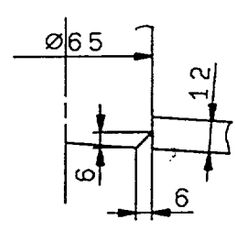	8

Main Weld	Welding Method	Base Metal Material	Dimensions and Groove Forms	S N
Rear box and end plate	Cover electrode welding	SUSF304 | SUS 304	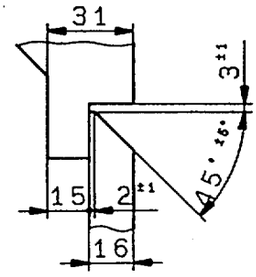	9
Outer shell and heat dispersion fin	TIG welding	SUS 304 | C1020P	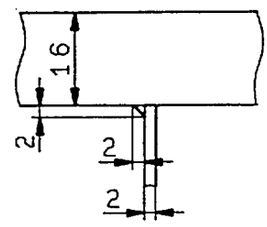	10
Outer shell and end plate	Cover electrode welding	SUS 304 | SUS 304	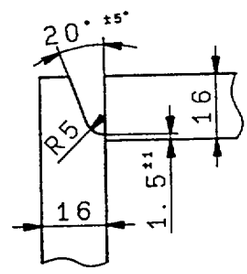	11
Front box and outer-end plate, as well as Rear inner-end plate and rear outer-end plate	Cover electrode welding	SUSF304 | SUS 304	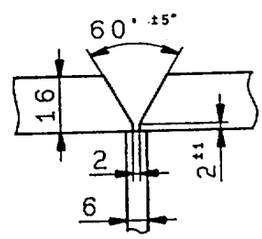	12
Outer shell and lifting lug for horizontal operation	Cover electrode welding	SUS 304 | SUS 304	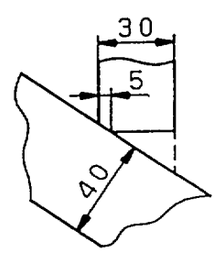	13

Main Weld	Welding Method	Base Metal Material	Dimensions and Groove Forms	S N
Outer shell and tie-down lug	Cover electrode welding	SUS 304 | SUS 304	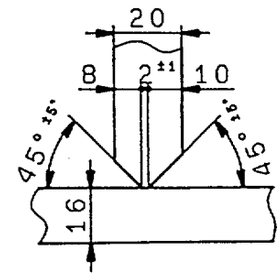	14
Outer shell and base seat	Cover electrode welding	SUSF304 | SUS 304	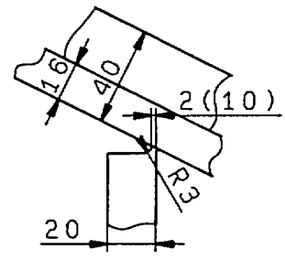	15
Gusset plate of the base seat and base plate	Cover electrode welding	SUS 304 | SUS 304	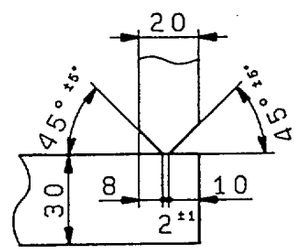	16

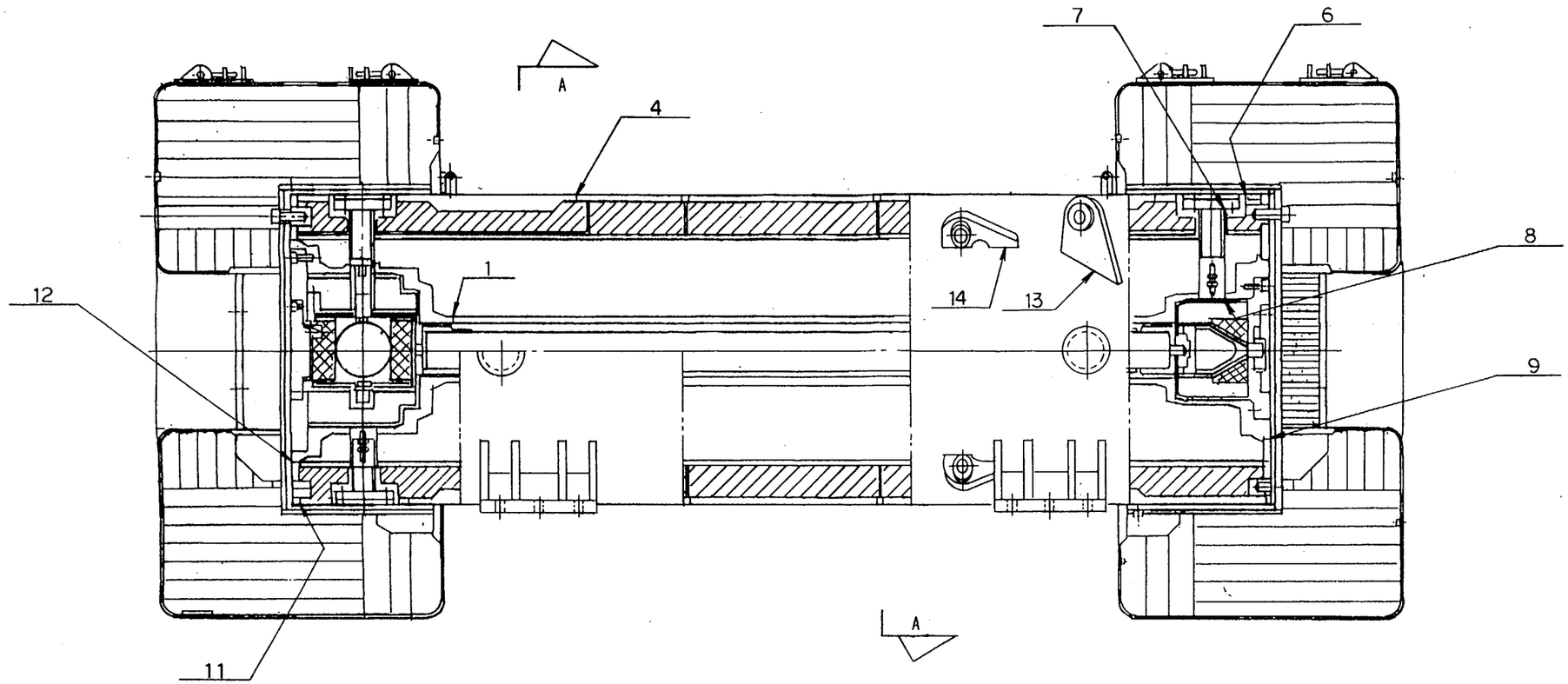

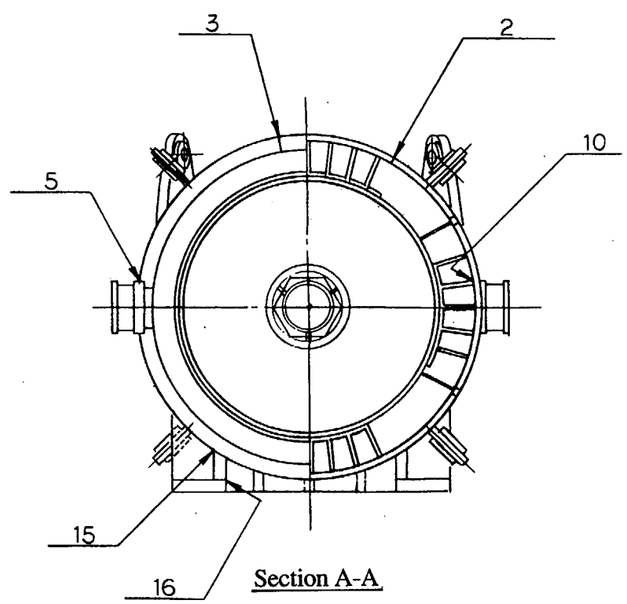

Section A-A

Fig. (III)-26 Arrangement of Weld Lines

ANSTEC
APERTURE
CARD

Also Available on
Aperture Card

9601260203 -54

(3) Weld washing

After cover electrode welding, any stainless steel slag must be removed with a chisel and wire brush. After TIG welding, slag must be removed with a wire brush. These tools are special tools made of stainless steel. Finally, stainless steel should be washed and degreased. For the degreasing liquid, you must use a nonionic surface active agent, industrial alcohol, acetone, etc.

(4) Weld finishing

In general, the weld must be finished sufficiently to make a nondestructive test possible. If finishing is needed for jointing with other parts or for any other reason, the weld may be ground, buffed or machine finished as needed.

In the case of grinding finishing stainless steel, a white alumina wheel or white wheel (both of the resinoid type) are used.

A.3.4 Repair of weld defects

If the visual inspection, penetrant inspection, or radiation penetrant inspection detects any weld defect, poor penetration, undercut, pin hole, slag inclusion, and/or crack, the defective part must be removed with a grinder, and repair welding must be conducted under the same conditions as regular welding. Then, the repaired weld must be subjected to the same inspections as a regular weld.

A.3.5 Heat treatment after welding

In the case of austenitic stainless steel, heat treatment after welding cannot improve structural strength as much as expected. On the contrary, heat treatment after welding may cause structural deformation due to liquified treatment at a high temperature or fragility due to the deposition of carbide or the extraction of phase under post-heat treatment conditions.

For these reasons, heat treatment after welding is generally omitted for austenitic stainless steel. This packaging is not welded for the same reason.

A.3.6 Special welding

This packaging is also not subjected to any special welding (cold welding, brazing, and others) during the manufacturing process.

A.3.7 Weld quality assurance plan, etc.

To ensure quality, the manufacturer shall manage the welding method, welder qualification, and the welding materials in the following way.

At the manufacturing design stage, the main welded joints must be identified with welded joint numbers on the manufacturing drawings. These welded joint numbers must be used to manage the welding method documentation. To handle the welded joint numbers, a standard must be prepared for a numbering system that workers would be able to understand easily.

Welding must be conducted in the manner certified by MITI or its delegated proxy, the Heat Engine Association a foundation juridical person, as specified under Article 46 of the Electrical Enterprise Law.

For the main welds, a welding manual must be prepared to clarify the reference to the welding method, the range of welding thickness, the material of the base metal, and the welding rod brand, as well as the welding conditions and the groove form.

Instructions on welding based on the welding manual must be issued for use by workers, and must include a system of maintaining the welding practice record after each welding.

A welder must be qualified by passing the specified confirmation test, certified by MITI or its delegated proxy, the Heat Engine Association.

A standard indicating the proper handling of welding materials must be prepared to ensure successful management.

Welding rods must be separated by brand and rod diameter during storage to prevent an incorrect welding rod from accidentally being brought out and used for an improper purpose.

To prevent the coverage from deteriorating by water, drying of cover electrode welding rods must be specified.

For the welding machine, the storage standard must specify a mandatory periodic inspection and its method. The weld inspection must be specified on the manufacturing drawings or the inspection manual. The criteria for that inspection must also be defined.

A.4 Shield manufacturing method

A.4.1 Casting of lead shield material (See Fig. (III)-27.)

Lead shield material is used for (a) the lead shield surrounding the inner shell of this packaging. It is also cast into (b) a rotating plug lid and its cover, rotating plug, front/rear sampling valve lids, and penetration hole lid. The volume of each of the lead shields for items (b) is much smaller than that for the item (a), and the depth of the former lead shield is also lower than that of the latter one. Therefore, the lead shield material for items (b) is preheated or heated in a different way than for the material for item (a); it is preheated or heated from the side or top of the can body with a gas burner. The other procedures, methods, and lead material specifications related to items (b) are the same as for item (a). Therefore, this section describes only the method of casting the lead shield material for item (a).

(1) General manufacturing schedule of the entire casting

To prevent cavities from being generated in the lead shield material, the can body is preheated before casting. After casting, the cast lead is sequentially cooled from the bottom to the top. Thus, using a method that involves the gradual solidification of lead from the bottom to the top ensures the gravitated pressure effects on casting. To prevent the inclusion of lead oxide in the lead shield material, inert gas (argon gas) is injected and floating lead oxide is removed during casting.

To facilitate application of the above method, casting is conducted by several charges. To prevent the cold shut, the next charge must be fed while the top of the previously charged lead is still fused.

The general manufacturing schedule of the entire casting is as shown in the flow below.

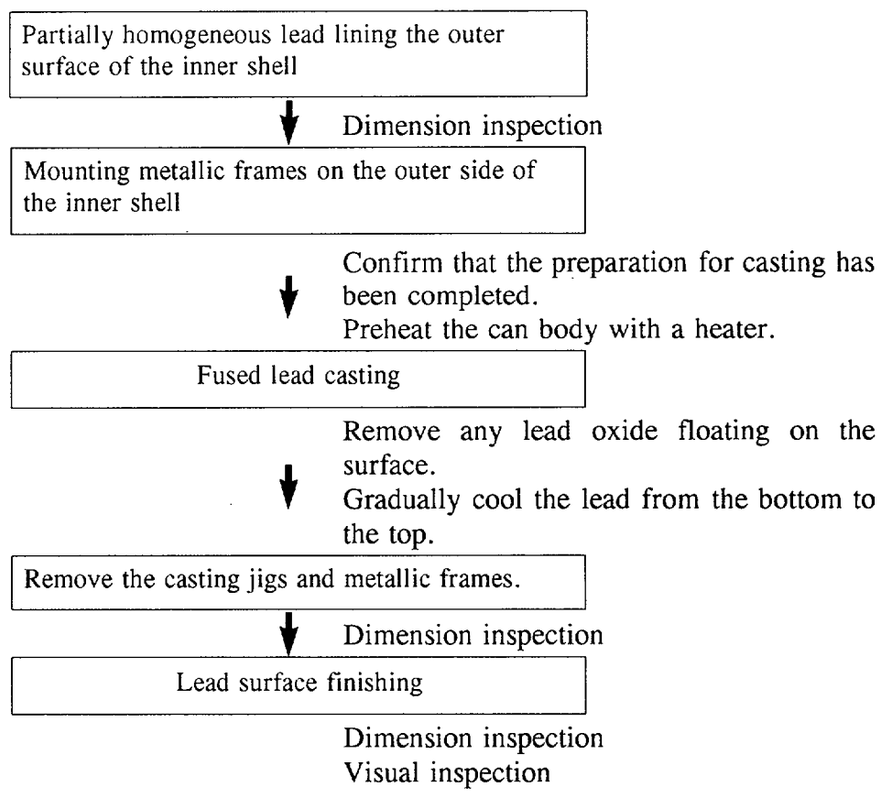

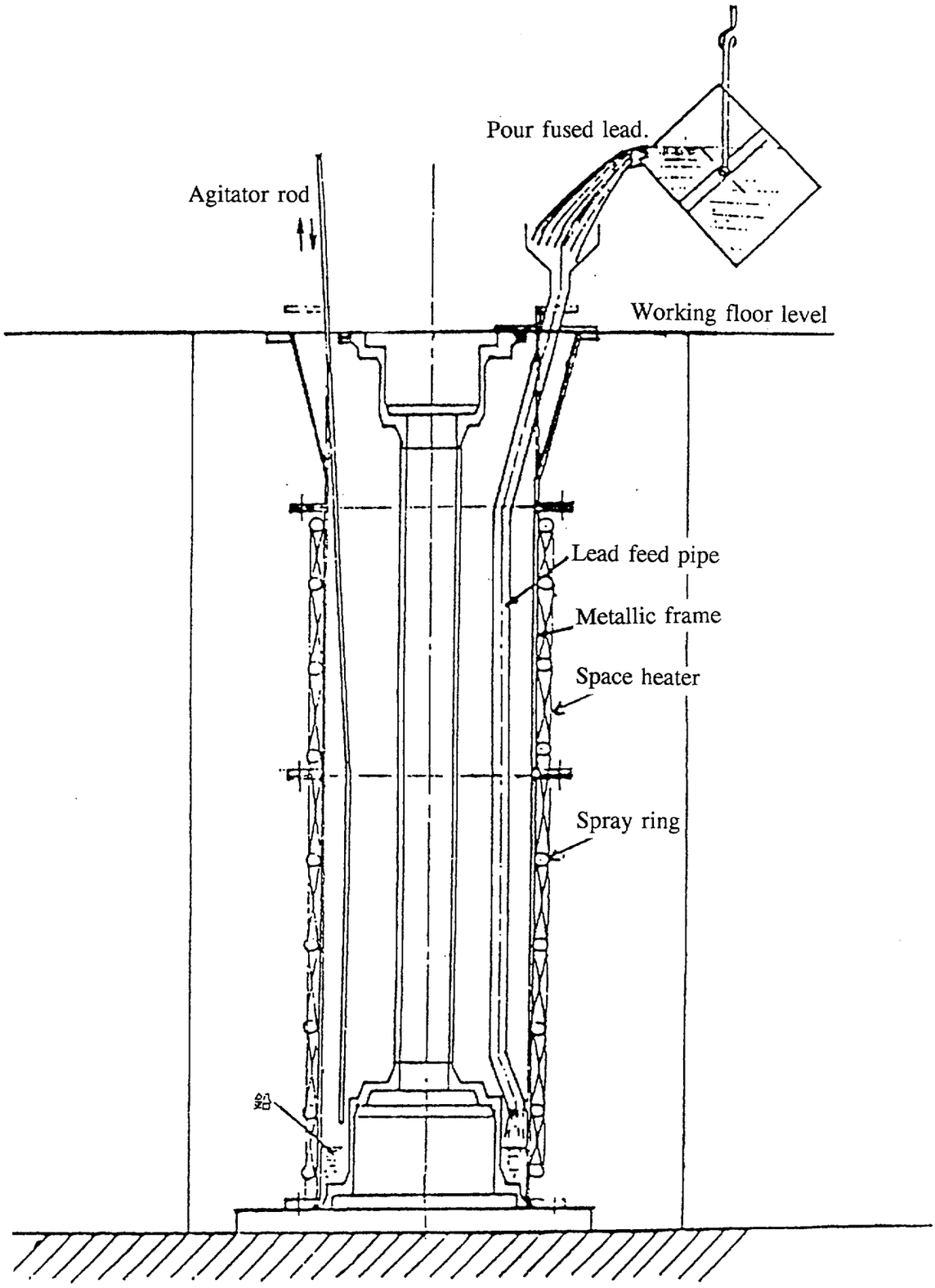

Fig. (III)-27 Lead Casting Manual

(2) Purity of lead

Lead that is at least 99.99% pure (JIS 2105 Special) must be used for casting.

(3) Purity of the preliminary plating material

As in the case of casting, lead that is at least 99.99% pure (JIS 2105 Special) must be used for partial adhesion by homogeneous lead onto the outer surface of the inner shell before lead casting.

(4) Heating method

To preheat the can and prevent the cast lead from rapidly solidifying and shrinking, a space heater is attached to the outer shell part. The space heater must be divided into several small blocks to ensure easy temperature control. Each of the heater blocks must have a controller that can maintain the temperature of the fused lead at approximately 370°C.

(5) Cooling method

Cooling is conducted to gradually solidify the fused lead from the bottom to the top of the casting part as the casting work proceeds. This operation requires that the fused lead be gradually cooled from the bottom to take advantage of the gravitated pressure effects of the fused lead. Cooling must be gradual, so that no solidification line will be generated in the fused lead in the packaging. The high-temperature part is cooled naturally or by cooling air supplied from the cooling spray ring after the space heater output is adjusted. After casting, air or water cooling is conducted, disconnecting the space heaters one after another.

(6) Casting method and speed

The casting work must be prepared after it is confirmed that the can that will be casted with lead has passed all machining inspections. After this confirmation, the can is vertically installed with the rotating plug box side down. The space heater, spray ring used for cooling, and thermocouple used to monitor the temperature are attached to the can. After preparations have been completed, the space heater is turned on and the preheating process begins.

Preheating must raise the temperature at a rate of approximately 50°C/hr to prevent distortion of the can. When the can temperature reaches 200 - 250°C, lead may begin to be poured. The temperature of the lead must be 450°C or less, and the standard pouring speed must be 1,000 kg/min. During the lead pouring operation, the liquid surface of the bucket and the casting part must be shielded by argon gas to prevent oxidation of the fused lead.

After the first pouring has been completed, the state of solidification must be observed as the lead cools naturally. If the first cooling has been successful, lead should be poured a second time and as the lead is poured, the cooling operation will begin again. Cooling must be controlled at a cooling speed of 25°C/hr or less and a solidifying speed of 100 - 200 mm/hr so that a solidification line will not form in the cast lead. This casting operation must be repeated several times before casting is completed.

(7) Casting operation sequence

The casting operation procedure is as follows:
(a) Dimensional inspection of the can
(b) Installation of the can
(c) Attaching the heater, thermocouple, and cooling device
(d) Preheating
(e) Fusing of the lead
(f) Pouring
(g) Cooling
(h) Finishing the cast lead end surfaces

(8) Preliminary plating material or preliminary washing

In the pre-process stage, grease and other contaminants must be removed from the can surface using a degreasing and cleansing agent. Contamination and dust must be removed by blowing clean air into the can or by wiping it with a clean cloth.

Preliminary plating (homogeneous) must be partially provided on the inner shell.

(9) Control of preheating and cooling

The space heater output must be adjusted according to temperature of each part of the can, which is measured with the thermocouple. During the cooling process, both the cooling air volume and the cooling water volume must be adjusted.

(10) Temperature control and measurement

The thermocouple inserted in the fused lead of each part of the can must be measured with the multi-point temperature recorder. Based on the recorded values, the space heater output and the volume of cooling water or air from the cooling device must be adjusted, so that the cooling speed will be 25°C/hr or less.

A.4.2 Uranium shield material manufacturing method

Not applied.

A.4.3 Other shield materials manufacturing method

(1) Tungsten alloy

To produce this kind of shield material, manufacturer-standard tungsten alloy blocks must be purchased and machined into a shape with the specified dimensions.

(2) Resin neutron shield material

Manufacturer-standard resin, polypropylene, glass chop, aluminium hydroxide, antimonyoxide, and zinc borate are mixed at the specified ratio and agitated. The resulting mixture must be poured into another container in a specified injection quantity, and an accelerator and hardening agent must be added. Then, the whole mixture must be agitated and air bubbles extracted. The liquid must be poured into the filling layer in several steps,

in a small amount at each step, to prevent cracks that may otherwise result from the heating and hardening of the resin compound.

A.5 Manufacturing method for valves and other attachments

Valves, O-rings, and other attachments must be procured by purchasing manufacturerstandard products.

A.6 Assembly and manufacturing method for other components

After the outer container has been set on the transport skid, this packaging must be assembled by applying the following procedure.

The rotating plug is first attached to the rotating plug lid and the rotating plug lid cover. Then this assembly is attached to the front end of the outer container. Thereafter, the front lid is attached. The shielding plug is attached to the shielding plug lid. The inner container is inserted into the inner shell of the outer container, and is attached to the shielding plug with the inner container screw. Then, the shielding plug lid is attached to the rear end of the outer container. Finally, the rear lid is attached.

After that the sampling valve is attached to this assembly. Then, the sampling valve lid is attached to the valve. The locking plug and orifice plug are set to the rotating plug penetration hole. Then, the penetration hole lid is attached to the hole. Finally, the front and rear shock absorbers are attached to complete the assembly. The clamping bolts for the lids (constituting the boundary of containment) are tightened at the specified torque using a torque wrench.

Materials are then cut, ground, and finished by applying the following machining method.

The correct type of machine must be selected for the machining work.

Lathe: Used for external turning, boring, cutting-off, face cutting, screw cutting, and others.

Drill: The radial drill or bench drill may be selected depending on the work to be done. These drills are mainly used for drilling.

Planer: Generally used for planing.

Milling machine: Generally used for surface grinding and making grooves.

Shaping machine: Generally used for planing small surfaces.

After the required inspections have been completed, buffing work is carried out.

(III)-B. Test and Inspection Methods

During and after the manufacture of the packaging, the following tests and inspections must be carried out to make sure that the packaging is being or was produced to meet the evaluation specified in Chapter (II) and the values specified during that evaluation. The test period must be as shown in Figs. (III)-1 to (III)-3. The test and inspection methods are described in each section. Table (III)-7 summarizes the object to be tested, test instructions, and criteria for each test/inspection item.

B.1 Material inspection

Materials related to the evaluation given in Chapter (II) must be inspected to make sure that these materials fulfill the performance specified in the standard in accordance with the certified material test report.

The criteria for steel materials such as stainless steel plate, stainless steel pipe, and precipitation-hardening stainless steel, must be in accordance with the appropriate JIS standards. In the case of filling materials such as resin and alumina cement, the material certificate of the raw materials must be confirmed, and the mixing ratio must be checked before filling. In the case of the O-ring, the material certificate must also be checked.

B.2 Dimension inspection

During the dimension inspection the tape measure, slide calipers, micrometer, and other measuring jigs controlled in accordance with Chapter (III) section D.10 must be used.

The following describes the dimension inspection method and the applicable criteria.

(1) Intermediate inspection

An intermediate inspection is carried out when this packaging is semi-finished. The dimension inspection deals with only the main dimensions. The criteria applied are based on the tolerances added to the illustrated dimensions. When no tolerances are indicated, the criteria for dimensions are as shown below. (JIS B045-1957 "Normal Secondary-Class Tolerances for Machine Cutting Dimensions")

The JIS standard for each steel material is applied to its plate thickness.

Cut Products (Unit: mm)

Nominal size classification		Tolerances
	4 or less	± 0.1
Over 4	Up to 16 incl.	± 0.2
Over 16	Up to 63 incl.	± 0.3
Over 63	Up to 250 incl.	± 0.5
Over 250	Up to 1,000 incl.	± 0.8
Over 1,000	Up to 4,000 incl.	± 1.6

Can products (Unit: mm)

Nominal size classification		Tolerances
	Up to 250 incl.	± 3.0
Over 250	Up to 500 incl.	± 4.0
Over 500	Up to 1,000 incl.	± 5.0
Over 1,000	Up to 2,000 incl.	± 6.0
Over 2,000	Up to 4,000 incl.	± 8.0

Shell roundness: Max. - min. $\leq$1% of the shell diameter
Up to a max. of 20 mm

(2) Final inspection
The final inspection is carried out after this packaging has been completed. A dimension inspection deals with only the main dimensions in the assembly drawing. The criteria are the same as in the intermediate inspection.

B.3 Welding inspection

A welding inspection is carried out in connection with the intermediate inspection during the manufacturing process. The contents, method, and criteria of the welding inspection are described below.

(1) Visual inspection
A visual inspection is carried out on all weld lines. The surface of the weld lines are visually observed to check whether there are any defects such as undercutting or cracking in the weld line. Any weld line that has no defect is accepted.

(2) Groove dimension inspection
The groove inspection checks the groove form, root opening, and levelling of the joint plates. The judgement standard is to be within the specified tolerances.

(3) Liquid penetrant inspection
In accordance with the penetrant inspection and the grade classification of defect indication pattern specified in JIS Z-2343, a penetrant inspection must be carried out on stainless steel weld lines to make sure that all the criteria are met.

This inspection is conducted in the following steps:

(a) Prior treatment:	Sufficiently wash the part being inspected with a cleansing liquid or acetone, and then naturally dry it for at least five minutes.
(b) Penetration treatment:	Make sure that the surface temperature of the part being inspected is 4.5°C or more. Uniformly apply a penetrating liquid to the surface by applying a dipping, brushing, or spraying method. The penetration time must be at least 15 minutes.
(c) Cleansing treatment:	The cleansing treatment must remove only excess penetrating liquid on the surface. It must not be so strong that it flows out the liquid that has penetrated into any surface defects. Use a cloth moistened with the cleansing liquid to wipe off the penetrating liquid. After removing the excess penetrating liquid, allow five minutes or more for the surface of the part being inspected to dry naturally before applying a developer to the surface.
(d) Development treatment:	After removing excess penetrating liquid, apply a developer to the part being inspected. Sufficiently agitate the developer, and apply it to the surface uniformly and thinly by using the spraying method.
(e) Observation:	The surface must be observed 7 to 30 min. after the developer has dried.
(f) Post-cleansing treatment:	After observing the surface, completely wash the part being inspected by using cleansing liquid or acetone. This part will be accepted if the penetrant inspection does not reveal any red stains indicating a defect.

(4) Radiographic test

The test is conducted by taking the following steps.

(a) Make sure that the part being inspected has passed the visual weld inspection.

(b) Attach sensitizer paper, film, and film mark in the inspection area.

(c) Take pictures of the part being inspected, irradiating it with the x-rays or γ-rays from the opposite side to the side where the film is attached.

(d) Develop the film and check that the film meets all the specified conditions required for that film.

(e) Observe the film images for defects to determine whether the part being inspected is to be accepted or rejected.

The part being inspected shall be accepted when the radiographic images meet the following criteria.

1) Class 1 by grade classification of the JIS Z3106 "Radiographic Test Method and Grade Classifying Method of Radiography of a Stainless Steel Weld" (1971)

B.4 Visual inspection

A visual inspection must be carried out during the intermediate inspection in the manufacturing process and during the final inspection upon completion of the manufacturing process. This inspection should visually observe the following items.

(1) Check that the forms and mounting positions are exactly as specified in the drawings.

(2) Check that there are no deviations in the product such as visual scratches or burrs on the cut part.

(3) Check that the finished surface is exactly as specified in the drawings.

(4) Check that the product has neither corrosion nor contamination.

B.5 Pressure inspection

After the inner shell has been completed (before casting lead), water pressure or air pressure of 294 kPa(G) should be applied to the inner shell that has been closed with a temporary lid and a pressure resistance inspection should be carried out to check for deformation of the inner shell. At the final inspection upon completion of manufacturing process, a pressure resistance inspection should also be conducted to check for deformation in the product. To do so, water pressure or air pressure of 294 kPa(G) should be applied.

B.6 Leakage test

A leakage test must be conducted on both the containment system and the airtight part.

(1) Containment system

A helium leakage test should be conducted on the containment system to make sure that the leakage rate is not higher than the values listed below.

Primary containment system

After the inner shell is completed (before casting lead): Leakage rate 1×10^{-5} atm·cc/sec or less

After the inner shell is completed: Leakage rate 1×10^{-5} atm·cc/sec or less

Secondary containment system

Fuel supporting cans I and II: Leakage rate 1×10^{-6} atm·cc/sec or less

Receiving tubes I and II: Leakage rate 1×10^{-6} atm·cc/sec or less

(2) Airtight part

An air pressure of 19.6 kPa(G) is applied to the airtight part. Then, soapy water is applied to the air-pressured part to make sure that no bubbles are generated by leakage.

Cement part of the container body
Cement part of the shock absorber
Shock absorber part of the shock absorber

B.7 Inspection for shielding integrity

(1) Gamma-ray shielding test

This inspection uses approximately 0.4 TBq of ^{60}Co as the radiation source and a survey meter to measure the dose equivalent rate on the container surface. It then compares the measured values with the calculated values to check whether the shielding integrity of the container is acceptable. A measurement is taken with the front and rear shock absorbers separated from the container. In place of the shielding integrity inspection of the front and rear shock absorbers, a shielding dimensional inspection is conducted on the shock absorbers.

The side of the container is measured at a rate of one point for approximately every 20 cm^2 of the container surface. The end surface of the container is measured by moving the measuring point at intervals of approximately 10 cm starting from the center of the end surface.

The measurement results are compared with the dose equivalent rates calculated for the same form (using the same calculation method as the shielding evaluation in Chapter (II) section D). The shielding integrity of the container is acceptable when the maximum of each of the measured values positioned in the center of the side, the side of the end (front and rear), and the end (front and rear) is less than or equal to the maximum of each of the calculated values at the corresponding positions. If a measured value is just several times greater than the background value, measurement error must be taken into account.

(2) Neutron-ray shielding dimension test

The composition of each component must be checked using the checksheet records. A small amount of the resin mixture that was used for construction must be sampled. The specific gravity of the sample should be measured to make sure that the specific gravity is more than or equal to the basic value (σ = 1.10) of the shielding calculation. After resin is filled, the filling ratio of the resin must be measured and a dimensional inspection must be conducted. In addition, a visual inspection must be conducted to make sure that there are no cracks in the shield.

Dimensional and material inspections must be conducted to check the neutron shielding integrity.

B.8 Shielding dimensional inspection

A shielding dimensional inspection must be conducted on the following places to check the dimensions.

γ-ray shield material

Lead (outer container body): After casting, the dimensions of the cast lead must be measured. The measured values must be more than or equal to the design dimensions. The filling ratio must also be measured, and the measured value must be 97% or more.

Lead (other than that used for the outer container body):

Before lead casting, the dimensions of the can must be

	measured. The measured values must be more than or equal to the design dimensions. The filling ratio must also be measured, and the measured value must be 97% or more.
Tungsten alloy:	Before lead casting, the dimensions of the tungsten alloy must be measured. The measured values must be more than or equal to the design dimensions.
Neutron shield material Resin layer:	Before resin filling, the dimensions of the can must be measured. The measured values must be more than or equal to the design dimensions. The filling ratio of resin must be measured, and the measured value must be 95% or more.

B.9 Heat transfer inspection

Upon completion, the packaging is placed on a transport skid. An electric heater with a thermal output of 260W equivalent to the maximum decay heat of the content is loaded into the inner container at the same position as the irradiated fuel pin at the center of Content I. The temperature of the packaging surface must then be measured.

A heat transfer inspection is conducted by using the heat transfer test equipment shown in Fig. (III)-28. The heat is output by controlling the voltage and current of the electric heater. The temperature is measured by using a C.A thermocouple. The measuring points are 14 points on the surface of the central part of the outer shell (the part including the heat dispersion fins), the surface of the end of the outer shell (on the front shock absorber side), and the surface of the front shock absorber (horizontal and vertical planes). Since the electric heater is placed inside the container, the rear shock absorber and the shielding plug are not attached to the packaging.

When the temperature at each measuring point in the thermal equilibrium is corrected for the difference between the outer air temperature at the time of measurement and 38°C, the corrected value should be less than or equal to the temperature given in section (III)-B, "Heat evaluation."

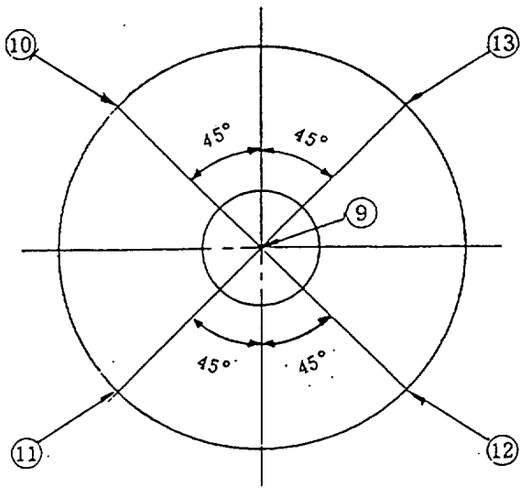

View A

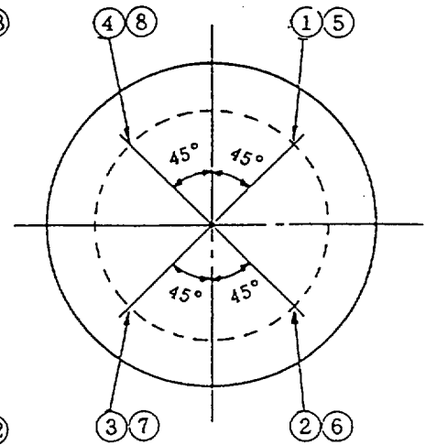

View B

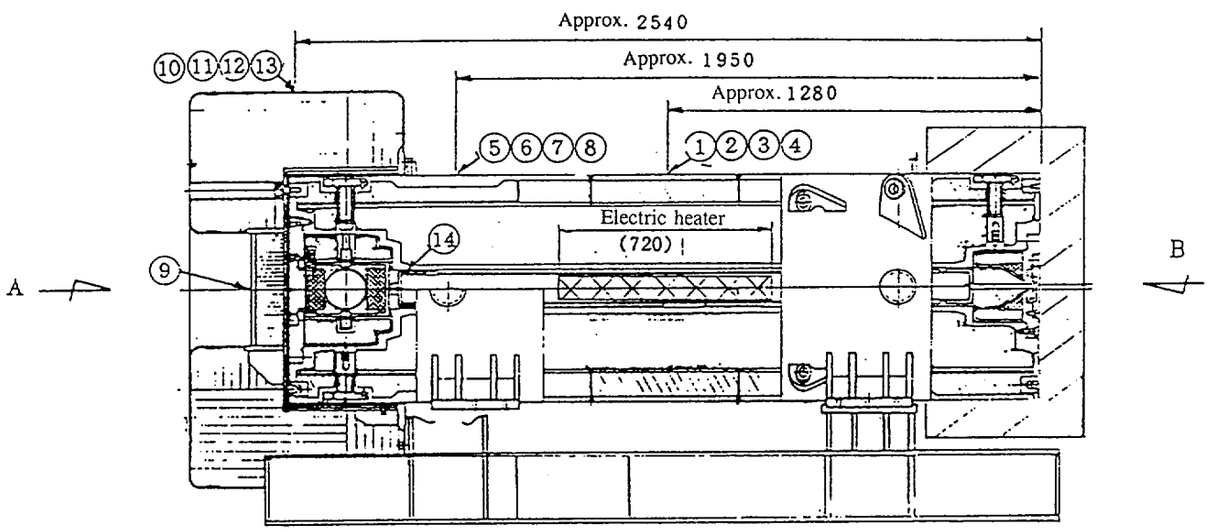

(Unit: mm)

Figures in a circle indicate the thermocouple number.

Fig. (III)-28 Heat Transfer Test

B.10 Lifting load inspection

After the packaging is completed, a lifting load inspection must be performed on the trunnion and the lifting lug for horizontal operation, to make sure that the trunnion can withstand a load of 19,000 kg, and that the lifting lug for horizontal operation can withstand a load of 25,000 kg (including the transport skid). Both loads are at least twice as large as the lifting weight to be provided at the time of normal transport of the packaging.

After the test, the welds of the trunnion and lifting lugs must be checked by visual and penetrant inspections to make sure that the welds are acceptable.

B.11 Weight inspection

Each of the products contained in the packaging must be weighed, and the results must be recorded. Moreover, the weight of all of the products must be included in the total weight of the entire packaging. Confirm that the total weight is less than or equal to 11,000 kg.

B.12 Subcriticality inspection

A visual inspection must be carried out on fuel supporting cans I and II containing Contents I, IV, V, and VII, on the supporting can containing Contents VI, and on the rack and receiving tube I containing Contents II, to make sure that there are no abnormalities such as deformation or other damage.

B.13 Operational and functional tests

Operational and functional tests must be conducted on the sampling valve and the rotating plug by applying the following steps. The criterion is successful operation.

The connection port is connected to the sampling valve, which is then opened and closed.

A manual handle is attached to the rotating plug that is then opened and closed.

B.14 Handling inspection

The following operations must be checked. Any component is acceptable if it operates smoothly.

(1) Open the rotating plug.
(2) Put the receiving tube in the rack, and place a cap on both ends of the inner container.
(3) Connect the inner container to the shielding plug with the inner container screw, and place the inner container in the outer container. Then attach the shielding plug to the rear lid through the locking plate.
(4) Close the rotating plug.
(5) Attach the locking plug and orifice plug.
(6) Attach the rear and front lids.
(7) Attach the penetration hole and sampling valve lids.
(8) Attach both shock absorbers to the packaging body.

Table (III)-7 Instructions for Inspection during Manufacture and upon Completion of the Packagings

(No. 1)

Inspection Item	Object to be Inspected	Inspection Instructions	Criterion
Material inspection	Body, inner container, front and rear shock absorbers, fuel supporting can*, supporting can*, rack*, and receiving tube*	Check the materials used against the certified material test report, or conduct mechanical and other tests, to verify that the materials meet the design criteria.	Steel materials must meet JIS standards. Other types of materials must meet the design criteria.
Dimensional inspection	Body, inner container, front and rear shock absorbers, fuel supporting can*, supporting can*, rack*, and receiving tube*	Use measuring instruments (tape measure, slide calipers, micrometer, and other measuring jigs).	The dimensions must be within the specified dimension tolerance levels.
Welding inspection	Body, inner container, front and rear shock absorbers, fuel supporting can*, supporting can*, rack*, and receiving tube*	Conduct (1) a groove fitting inspection, (2) a visual appearance inspection, (3) a penetrant inspection, and (4) a radiographic test to check the quality of the welding.	Welding must meet the criteria specified in section B.3 "Welding Inspection" of (III)-3 Methods of Tests and Inspections, as well as the design criteria.
Visual inspection	Body, inner container, front and rear shock absorbers, fuel supporting can*, supporting can*, rack*, and receiving tube*	A visual inspection must be performed to assess the outside of each component.	The exterior should not exhibit harmful, dirt or corrosion damage. The finished surface should be as shown in the drawings.
Pressure inspection	Body (containment system)	(1) After the inner shell has been completed, attach a temporary lid to the inner shell and apply water pressure (or air pressure) at 294 kPa(G). (2) After the packaging has been completed, apply water pressure (or air pressure) at 294 kPa(G).	No deformities or cracks, and no drop in pressure.

* Excluded from the packaging registration because they are contents.

(No. 2)

Inspection Item	Object to be Inspected	Inspection Instructions	Criterion
Shielding dimensional inspection	γ-ray shielding (1) Lead (body of the outer container) (2) Lead (other than the body of the outer container) (3) Tungsten alloy	(1) After lead casting, measure the dimensions with a tape measure or other measuring device. (2) Before lead casting, measure the dimensions of the can. Also measure the filling ratio of the lead. (3) Before lead casting, measure the dimensions with slide calipers and other precision measuring devices.	(1) The measured values must be greater than or equal to the design dimensions. The filling ratio must be 97% or more. (2) The measured values must be greater than or equal to the design dimensions. The filling ratio must be 97% or more. (3) The measured values must be greater than or equal to the design dimensions.
	Neutron shielding (4) Resin layer	(4) Before filling it with resin, measure the dimensions of the can. Also, measure the filling ratio of the resin.	(4) The measured values must be greater than or equal to the design dimensions. The filling ratio must be 95% or more.
Leakage test	(1) Body (containment system) (2) Fuel supporting can*, receiving tube* (3) Cement parts, shock absorber	Conduct a helium leakage test to check the rate of leakage. Conduct a helium leakage test to check the rate of leakage. Perform a soapy water test on the weld and other parts.	(1) The leakage rate must meet the design criteria (1 x 10^{-5} atm·cc/sec or less). (2) The leakage rate must meet the design criteria (1 x 10^{-5} atm·cc/sec or less). (3) No bubbles will be generated unless there is a leak.

* Excluded from the packaging registration because they are contents.

(No. 3)

Inspection Item	Object to be Inspected	Inspection Instructions	Criterion
Shielding integrity inspection	Body (The shock absorbers and the inner container are excluded from this inspection because they are subjected to a material inspection and a dimensional inspection to ensure shielding integrity. The fuel supporting cans and the receiving tubes in the space inside the inner container are not included in the shielding evaluation. Therefore, they are excluded from this inspection.)	(1) Insert cobalt 60 at approximately 0.4 TBq in the body of the packaging to be subjected to a γ-ray shielding test, and indicate the dose equivalent rate on the surface of the packaging. (2) Conduct a neutron shielding test, material inspection, dimensional inspection, and filling ratio inspection to ensure shielding integrity.	(1) γ-ray shielding test Compare the measured values with the calculated values obtained under the same conditions as at the time of instrumentation (use the same shielding evaluation technique as in section (II)-D, "Shielding Evaluation.") The measured values must be less than or equal to the calculated values. (2) Neutron shielding test The results must fall within the specified dimension tolerances, and meet the design criteria.
Heat transfer inspection	Body, inner container, and front shock absorber	Insert an electric heater (260W) with an output equivalent to the maximum heating value of the contents, and measure the temperature on the packaging surface and other main parts using a thermocouple or other measuring devices.	After the outside air temperature has been corrected, the temperature on the packaging surface and the other main parts should be less than or equal to the values indicated in section (II)-B, "Thermal Evaluation."
Load lifting inspection	Lifting trunnion, pivoting trunnion, and lifting lug for horizontal operation	Apply a load twice as large as the lifting load to the lifting lug, and check the lifting lug, its weld, and the proximity to the weld by conducting a visual inspection and a penetrant inspection.	The lifting lug, its weld, and its proximity to the weld must withstand a load twice as large as the lifting load, and must not exhibit abnormalities such as deformation or cracking.

* Excluded from the packaging registration because they are contents.

(No. 4)

Inspection Item	Object to be Inspected	Inspection Instructions	Criterion
Weight inspection	Body, inner container, front and rear shock absorbers, fuel supporting can*, rack*, receiving tube*, transport skid, and supporting can*	Weigh the finished packaging.	The measured weight must be less than or equal to the design weight of 11,000 kg (or 12,500 kg, if the transport skid is included).
Sub-criticality inspection	Fuel supporting can I* Fuel supporting can II* Rack* Supporting can*	Measure the diameters and pitches using slide calipers.	Outside diameter of the inner cylinder: 60.5 ±2 mm Outside diameter of the inner cylinder: 42.7 ±2 mm Pitch diameter: 70 ±2 mm Outside diameter of the inner cylinder: 42.7 ±2 mm
Operational and functional test	Sampling valve and rotating plug	Connect the connection port to the sampling valve, and open and close the valve. Attach a manual handle to the rotating plug, and open and close the plug.	The valve must always operate properly, and it should be possible to open and close the valve and the plug.
Handling inspection	Body, inner container, shock absorber, fuel supporting can*, rack*, receiving tube*, and supporting can*	Perform the following operations. (1) Put the fuel supporting can in the inner container, and cover both ends of the inner container with the cap. (2) Put receiving tube I in the rack, and cover both ends of the inner container with the cap. (3) Put receiving tube II in the supporting can, and cover it with the top and bottom caps.	Handling should be smooth and easy.

* Excluded from the packaging registration because they are contents.

(No. 5)

Inspection Item	Object to be Inspected	Inspection Instructions	Criterion
		(4) Connect the inner container to the shielding plug, and attach the shielding plug to the rear lid. (5) Close the rotating plug. (6) Attach the locking plug and the orifice plug. (7) Attach the front and rear lids. (8) Attach the penetration hole and sampling valve lids. (9) Attach both shock absorbers to the packaging body.	

(III)-C Packaging Manufacturing Schedule

Table (III)-8 lists the manufacturing schedule of the packaging.

Table (III)-8 Packaging Manufacturing Schedule

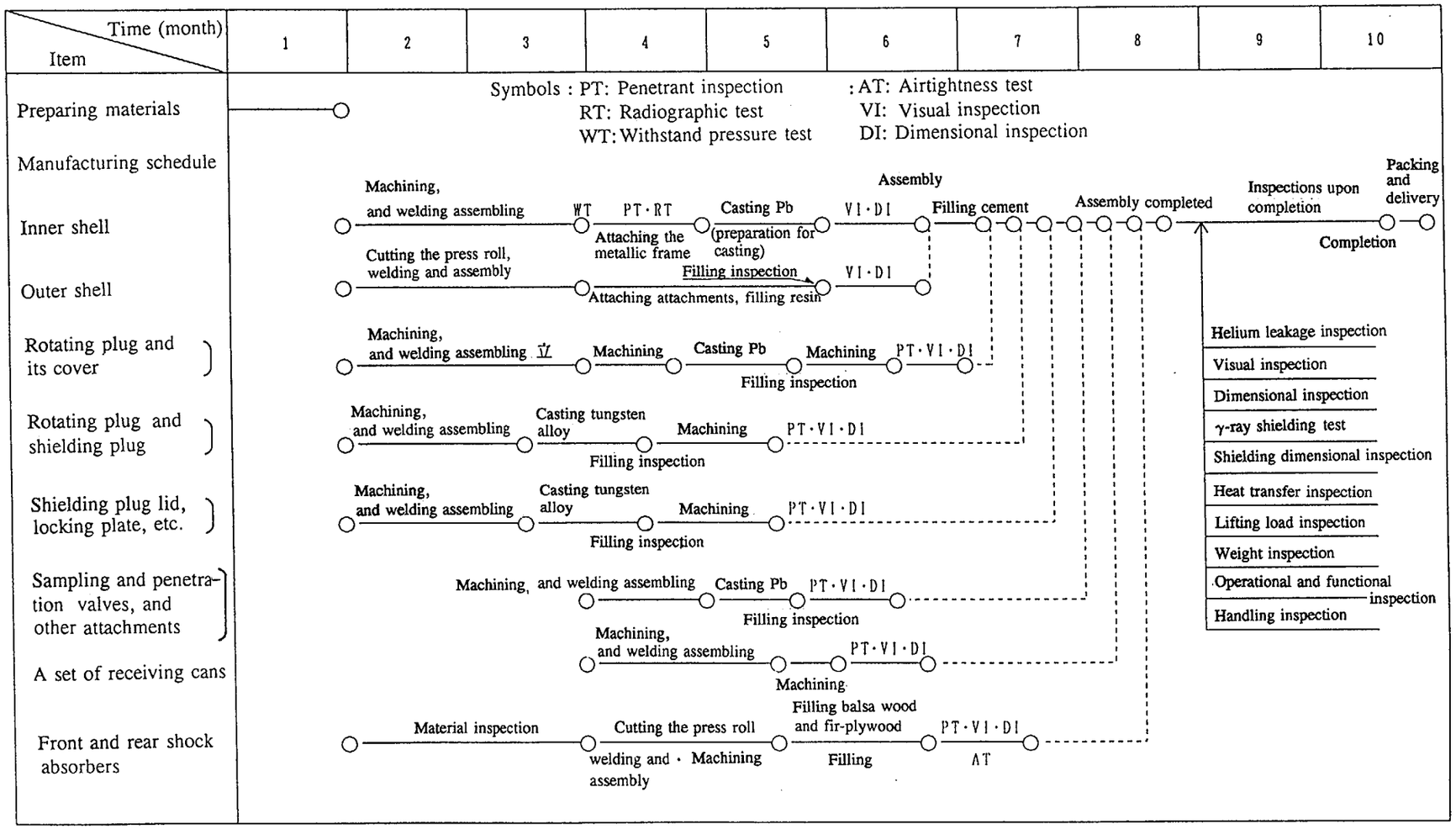

(III)-D. Quality Control

Design, manufacture, inspection, testing, and all other operations for the packaging must be conducted in accordance with the quality assurance program described in this section.

D.1 Organization

The packaging must be produced by the manufacturer to whom such manufacturing is entrusted under the auspices of the Power Reactor and Nuclear Fuel Development Corporation (PNC).

Quality assurance by PNC and the manufacturer must be ensured under a quality assurance plan approved by both parties in advance.

Fig. (III)-29 provides a sample quality assurance organization.

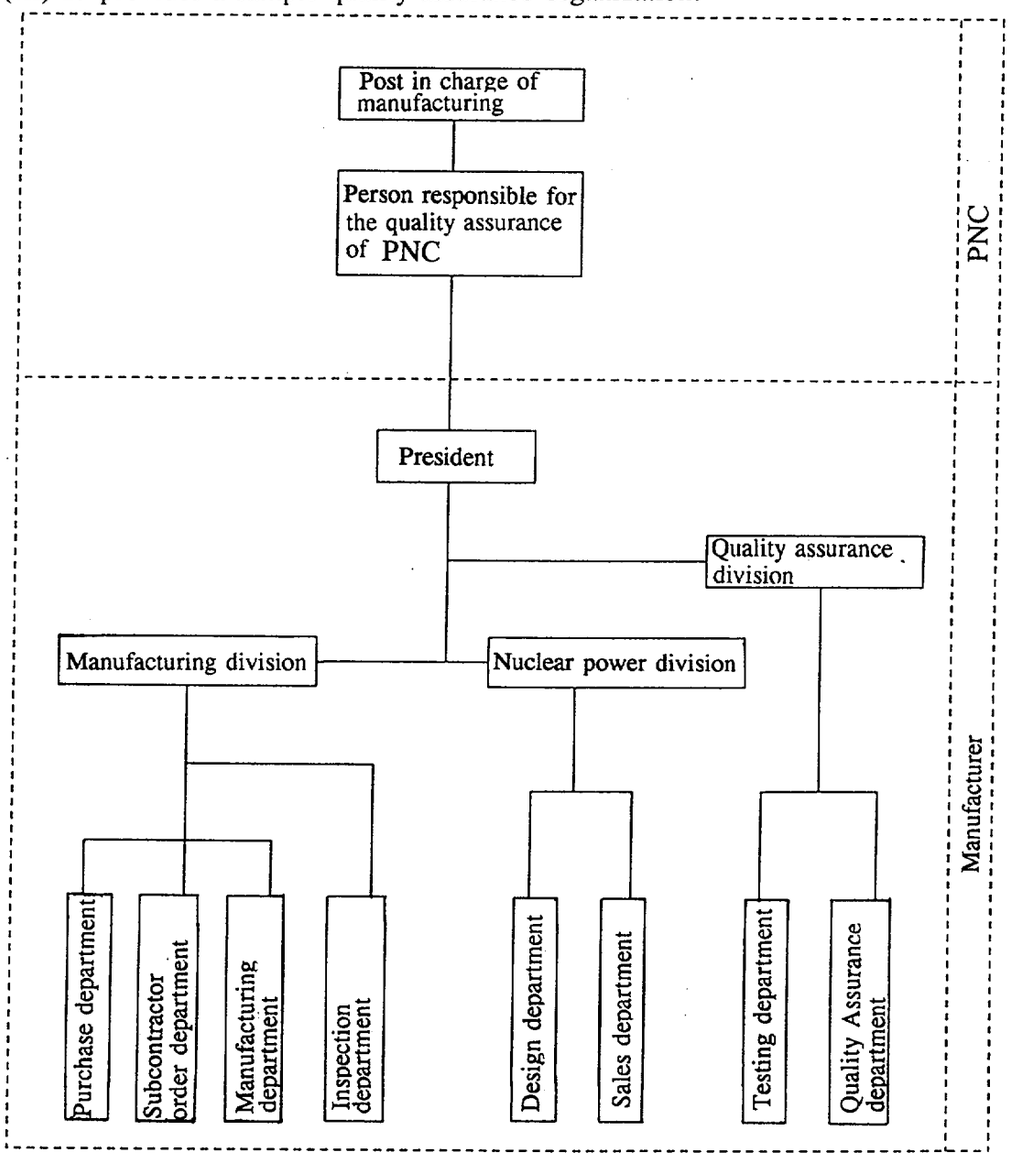

Fig. (III)-29 Packaging Quality Assurance Organization Chart (a sample)

D.1.1 Operational scope of PNC (Power Reactor and Nuclear Fuel Development Corporation)

The person responsible for the quality assurance of PNC shall conduct all quality assurance work related to packaging design, factory inspection, transport to PNC, as well as storage, testing, and inspection at PNC.

D.1.2 Manufacturer's quality assurance system

The manufacturer must ensure that the quality assurance division is under the president's direct control. The department is in charge of design, manufacturing, subcontractor orders, test/inspection, handling, shipment, storage, cleaning, preservation, remodelling, and corrections that affect the capability to ensure quality reliability and safety, as well as the general capability to ensure quality. The department must be competent for these tasks. The following sections describe the main jobs of each responsible department.

D.1.2.1 Quality assurance division

The quality assurance division confirms the establishment and practice of the quality assurance program and is in charge of the following departments.

(1) Quality assurance department
This department establishes and practices the quality assurance program.

(2) Test department
This department conducts different welding tests such as mechanical tests, metallic tests, chemical analyses, and water tests.

D.1.2.2 Nuclear power division

This division controls all tasks related to the sale and design of nuclear power equipment.

(1) Sales department
The nuclear power sales department negotiates with customers with respect to their inquiries or orders for nuclear power equipment and/or packaging, and sends written information on the applicable regulations, standards, and design requirements to the quality assurance division and the design department as quickly as possible.

(2) Design department
This department prepares working drawings, etc. reflecting information on regulations, standards, and design requirements received from the sales department.

D.1.2.3 Manufacture division

The manufacture division must have four departments to practice quality assurance. These are the testing, manufacturing, subcontractor order, and purchase departments.

(1) Test department
This department is in charge of all tasks related to inspections following the completion and factory inspection of packaging.

(2) Manufacturing department
This department is in charge of manufacturing packaging in accordance with working drawings and manuals prepared by the design department.

(3) Subcontractor order
The quality assurance division of the manufacturer supervises subcontractor manufacturers.

The supervision results are checked by the responsible person of PNC to ensure the quality. The subcontractor order department places orders for manufacturing and machining with authorized outside manufacturers.

(4) Purchase department

The quality assurance division of the manufacturer inspects the suppliers of raw materials, etc., and these inspection results are checked by the person responsible for PNC. The purchase department only places orders with authorized suppliers.

D.2 Quality assurance program

(1) Disfunction or machinery defect

This package is used to transport irradiated fuel. Sufficient consideration has been given to the design in order to remove decay heat from the contents and ensure proper shielding against radiation. The packaging has been designed to be durable, and offer strong containment, which is the most important point of this product. Therefore, the packaging does not have any parts that may break down.

(2) Relationship between design and manufacture

The design department of the manufacturer shall prepare working drawings and manuals that fully reflecting the design documents of the packaging issued by PNC. The working drawings and manuals must be approved by PNC, and must then be sent back to the manufacturer's design department.

The manufacturing department must prepare a quality control procedure, manufacturing procedure, and schedule table based on the working drawings and manuals provided by the design department. The documents prepared by the manufacturing department must also be approved by PNC. After approval, the manufacturer shall strictly follow the requirements of those documents.

(3) Control and supervision of processes and equipment

The main items of the manufacturing schedule include material handling, iron working and machining, cutting, welding, assembling, testing, and inspecting.

When handling the materials, the manufacturer shall take the appropriate precautions to protect against incorrect identification of materials and corrosion/damage to the materials during procurement, storage, and handling.

With respect to the iron working and machining as well as cutting, the manufacturer shall determine the working methods for the required structures and dimensional tolerances, taking into account the mechanical and physical properties of the materials.

In particular, dimensional tolerances are related to containment. The manufacturer shall strictly control and supervise dimensional tolerances.

Welding can greatly affect the mechanical, physical, and chemical properties of materials. The manufacturer shall strictly control and supervise the welding work.

Assembly is closely related to functionality. The manufacturer shall assemble the packaging strictly controlling the procedure so that it reflects the concepts of the basic design.

For tests and inspections, the manufacturer shall outline the points, contents, and criteria of the tests and inspections that must be approved by PNC. The manufacturer shall conduct testing and inspections in the presence of PNC personnel.

(4) Applicable degree of function proven by inspections and tests

The manufacturer shall prepare manuals for the tests and inspections to be conducted at the time of procurement, manufacturing, and working of materials, as well as upon completion of the packaging. In accordance with those manuals, the manufacturer shall conduct tests and inspections of materials, parts, machinery, and assemblies, as well as the manufacturing method and manufacturing/working technologies. The manufacturer

shall record the results of all tests and inspections to ensure packaging performance. Moreover, the manufacturer shall conduct the following tests and inspections, among others:

1 Visual inspection	a Weight inspection
2 Dimensional inspection	b Lifting load inspection
3 Material inspection	c Shielding dimensional inspection
4 Welding inspection	d Shielding integrity inspection
5 Inspection of filler filling ratio	e Heat transfer inspection
6 Pressure and leakage tests	f Subcriticality inspection
7 Operational and functional inspection	g Handling inspection

1) Visual inspection
A visual inspection must be conducted to check for any faults that may affect machinery function, such as serious dents and bruises.

2) Dimensional inspection
The criteria of dimensional inspections, must be determined, taking into account the effects of the dimensions of steel plates, steel pipes, and fastening elements on strength, as well as on functionality, including mechanical actions, containment, and joints with other members.

3) Material inspection
One of the most important points from a functional point of view is to use materials in conformity with the design. Therefore, before the work starts, a material inspection must be conducted to check the materials to make sure that the certified material test report conforms to the standard.

4) Welding inspection
The welding inspection must include a check of the skill of the welder and the welding practice method. Such an inspection shall be nondestructive and shall take place after the welding is completed, as needed. These checks are together generically known as the welding inspection. The most important welds are the welds of the longitudinal and circular joints of five blocks of the outer shell and the joints between the front/rear boxes of the inner shell and the inner shell pipe. Suitable parts must be selected, specimens must be sampled, and a mechanical test must be conducted.
Any welders engaged in welding work must have the proper certification and sufficient skill to do a good job. In the present case, welding must be performed by welders authorized by the minister of MITI or his delegated proxy.
The welding method must be one that is acceptable from a metallurgical point of view to prevent the functions from deteriorating because of the relationship between the base metal and the weld metal. Therefore, the manufacturer must apply a welding method verified by the minister of MITI or his delegated proxy.
A nondestructive inspection must be conducted to eliminate faults that are related to containment, and which therefore cause functionality to deteriorate.

5) Inspection of filler filling ratio
Balsa wood and fir-plywood are used to absorb shocks and insulate against heat, while alumina cement is used to insulate against heat. Resin is used to shield neutrons, while lead and tungsten are used to shield γ rays. All of these substances are fillers used in the packaging. With some of these fillers, the filling ratio must be measured to clarify its relationship to the design.

6) Pressure and leakage tests
A pressure test must be conducted to check that the product maintains strength in the face of an accident or fire. The leakage test must be conducted to check that containment is ensured under general test conditions and even under special test conditions.

7) Operational and functional test
This test must be conducted to check that the contents can be smoothly put in and taken out of the packaging.

8) Weight inspection
This inspection measures the gross weight of the product to check that design standards such as lifting load and drop shock load are met.

9) Lifting load inspection
After the packaging has been completed, a lifting load inspection must be conducted on the trunnions and lifting lugs for horizontal operation to make sure that these parts can withstand a load two times as much as the lifting weight during normal transport of the packaging. Loads may be provided by using the load testing equipment. After a load is applied, a penetrant inspection must be conducted on the welds of the trunnions and lifting lugs for horizontal operation. Thereafter, the presence of any resulting fault must be checked by the coloring method.

10) Shielding dimensional inspection
A thickness inspection must be conducted on the shielding materials (such as lead and resin) during the manufacturing process, as well as on the inside and outside diameters of the outer and inner shells when each is completed. For the acceptance criteria, tolerances must be shown on the drawings. Any dimensions within those tolerances must be accepted.

11) Shielding integrity inspection
After the packaging is completed, the γ-ray source (Approximately 0.4 TBq of ^{60}Co) must be put in the packaging, and the surface dose equivalent rate must be measured to make sure that the rate is less than the calculated value. Neutron shielding must be assured by conducting a material inspection, dimensional inspection, and inspection of the filling ratio.

12) Heat transfer inspection
After the packaging is completed, an electric heater with a thermal output equivalent to that of the irradiated test fuel element must be put in the packaging. Heat transfer on the main parts of the packaging must be measured, and the measured values must be compared with calculated values to ensure safety.

13) Subcriticality inspection
Visual and dimensional inspections must be conducted on the packaging body, rack, fuel supporting can, and supporting can. The dimensions must be checked to make sure that they meet design conditions.

14) Handling inspection
The handling inspection must be conducted to check the loading/unloading of the packaging body, inner container, fuel supporting can, supporting can, rack, and receiving tube, as well as the handling of the locking plate, operation of the shielding plug and rotating plug, and operability of the quick coupler and orifice.

(5) Grade of standard, past record of quality, and degree of standardization
The manufacturer shall establish the standard to be applied to this packaging in conformance with the practice standard for the quality assurance and quality control programs in the manufacture of machinery for nuclear electric power plants. Each machine and part must be subjected to periodic inspections depending on the frequency of use and the length of use, and inspection records must be checked to evaluate the quality record. The manufacturer shall ensure standardization by clarifying the above standard.

D.3 Design control

The design department of the manufacturer shall prepare working drawings, etc. of the packaging in order to reflect the PNC design documents. Then, the working drawings, etc. shall be checked by a third party (for example, the drawing check department). Check items must be determined to make sure that the working drawings correctly reflect the specific requirements, such as the basic design conditions, design requirements, and standards.

D.4 Instructions and procedures

Prior to the manufacturing process, PNC and the manufacturer must negotiate to clarify the specifications based on PNC's approved specifications. PNC must provide the manufacturer with drawings, etc. Moreover, to supplement these instructions, the manufacturer shall issue manuals such as a manufacturing manual and a test/inspection manual, as needed. These documents will take effect after they are approved by PNC.

The manufacturer must establish a system in which the manager in charge of manufacturing will manage all the work by issuing instructive documents for the assignment of work, and the delivery of materials, etc. from the warehouse. Moreover, he must make sure that each welder thoroughly understands the working drawings and related manuals.

D.5 Management of documentation

All instructions, manuals, and drawings related to quality must be approved by the quality control division before they can be distributed. Distribution of documents and the confirmation of distribution must be absolutely under the control of the design department. Each document must have a forwarding note (including a receipt slip) when it is distributed, and the person who receives it must sign the receipt and return it to the forwarding department, so that the distribution of documents will be well managed. This procedure is also applied to the revision of documents, and any old documents replaced by updated versions must be disposed of. All documents must be maintained in accordance with the procedures specified in D.14.

D.6 Provision of materials, machinery, and services

PNC clarifies specifications for materials including type and function by supplying procurement specifications. In accordance with procurement specifications, the manufacturer shall prepare manuals and drawings for the manufacturing process, and these must then be approved by PNC. The manufacturer must also prepare manuals for the construction, testing, and inspections that must then be approved by PNC. These documents must define the various requirements for materials ranging from the type of materials and the purchase conditions to conform to the required functions.

D.7 Administration of the identification of materials, equipment, and components

For purpose of identification, the administration of materials, components, and equipments used for the packaging must be clearly identified with permanent or temporary markings, including the part number or serial number, to allow for easy followup. The manufacturer must prepare an administration manual for materials, components, and equipment, including a marking method and marking agents, clarifying its relationship to the specifications, drawings, and other related documents.

D.8 Control of special processes

In the case of special processes such as welding, cleaning, and nondestructive inspections, work must be conducted under control in accordance with manuals and instructions prepared in conformity with JIS and MITI standards.

Any workers involved in special processes must have the appropriate qualification issued by the public agencies or they must be selected in accordance with the manufacturer's standard.

The manufacturer shall establish and operate a system which will require workers or their foremen send written reports to a person in charge of control when the work is completed and the person in charge of control will check and maintain these reports to prevent defects that may otherwise arise in the special process work.

D.9 Control of the testing

The method and accuracy of all tests depend on the packaging to be tested. The manufacturer shall submit the test manual to PNC, which will inspect and examine its contents giving adequate consideration to the grade, materials used, and shape before establishing an inspection manual. PNC will conduct the inspection as follows:

(1) Data sheet
The manufacturer shall control the data sheet in accordance with the manufacturer's rules regarding the maintenance of quality records. The rules must clarify the types of quality records to be maintained, the control system, the place and period of storage, the methods of sorting and arranging the records, and the identification method. The rules must also specify how to treat films used in radiation permeation tests.
The manufacturer must specify the forms in preparing the data sheet and clarify the purpose of the data sheet.

(2) Method of inspection
The manufacturer must set out the corporate rules governing the method of inspection in accordance with the standard and criteria to be applied. The rules must clearly describe the objectives and method of inspection, the specifications of equipment and materials used, the criteria used, and the recording method.

(3) Inspector qualification
The manufacturer must assign those tasks related to inspection exclusively to inspectors who belong to a department (the inspection section) that is independent of the manufacturing department.
The manufacturer must make sure that the nondestructive tests are conducted by workers, who have the proper qualification issued by a public agency or who are certified by the manufacturer's corporate rules that have been previously approved by PNC.

(4) Calibration of machinery
The manufacturer shall calibrate all devices to make sure that gauges, meters, measuring instruments, and test equipment/facilities that are applied to tests affecting quality are maintained within the range of accuracy necessary for meeting the requirements of the inspection manual. The calibration results must be verified by PNC.

(5) Inspection manual
To manufacture the packaging, an inspection program must be prepared for each inspection item. The manufacturer shall prepare the manual describing the practice time for inspections, the methods of inspection, and the applicable criteria.
The inspection manual shall be maintained by both PNC and the manufacturer as quality records, together with the inspection results.

(6) Repair, improvement, replacement, and reinspection
If any faults or defects are detected by an inspection during the manufacturing schedule or by the final inspection, the manufacturer shall repair, improve, or replace the faulty or defective part in accordance with the requirements provided in the specifications or design drawings, and shall conduct an appropriate reinspection in the presence of PNC personnel. The reinspection method shall be determined through negotiations between PNC and the manufacturer.
In this case, the contents of any negotiations shall be recorded, as well as the cause, process, actions, and methods involved, and such records shall be maintained. The manufacturer must carry out repairs, improvements, and replacements in accordance with the conditions specified in the written instructions. The manufacturer must prepare flow charts to control the issuance of documents (instructions), actions, and reports. PNC shall check these flow charts against the design requirements, and shall approve them.
A reinspection must be conducted in the presence of personnel from PNC in accordance with the manufacturer's inspection manuals.

D.10 Control of measuring instruments and test equipment

The manufacturer shall control measuring instruments and test equipment in accordance with the manufacturer's control rules. These control rules must specify the control objectives, as well as the scope, handling, storage method, standard and period of calibration, method of indication, method and verification of inspections, and form of the control book. The control rules must be approved by PNC.

D.11 Handling and storage

PNC must check that materials, components, and machines used for the packaging conform with the specifications. The manufacturer shall apply the proper identification to enable collation with the different certificates necessary for a series of processes ranging from the checking of raw materials to shipment. The manufacturer shall also classify the materials to prevent the mixing of dissimilar materials during storage and use.

D.12 Control of inspection and manufacturing progress

(1) Control of the manufacturing procedure
The manufacturer shall prepare a flowchart-type plan, which includes the manufacturing, testing, and inspection schedules for the packaging. The manufacturer shall also clarify and control the manufacturing procedure.

(2) Confirmation of the state of the schedule
The manufacturer shall confirm the schedule using the check sheet during the manufacturing processes, and shall record the date of completion of each process on the manufacturing schedule sheet.

PNC shall request the manufacturer report the state of schedule to check the schedule progress.

D.13 Control of corrections (See Fig. (III)-30.)

(1) Control of corrections by the manufacturer
If any defect is detected in the product or in the schedule, the manufacturer must call quality control meetings and take measures to locate the cause of any trouble and make

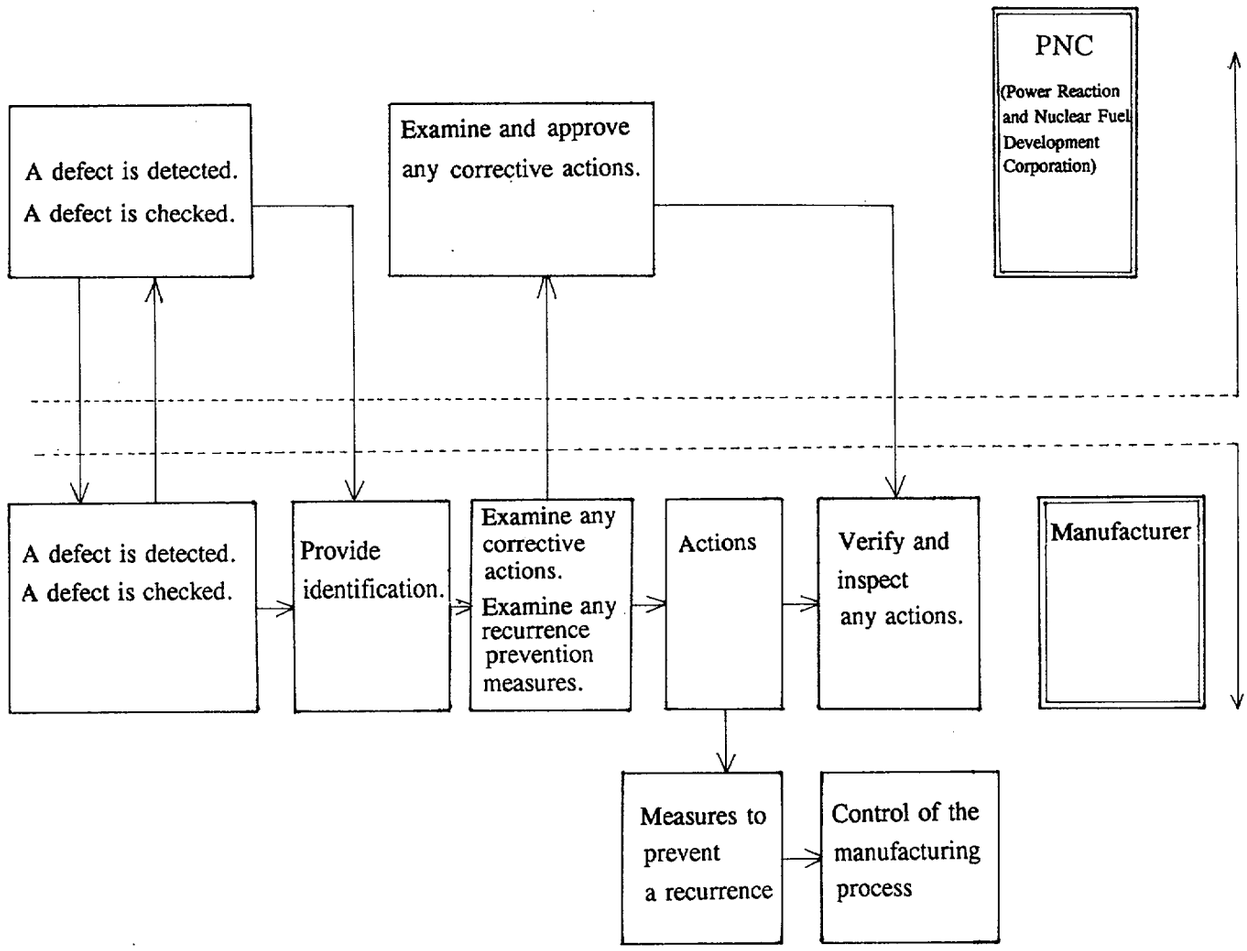

A. Fig. (III)-30 Correction Control Flow

improvements to prevent the recurrence of the defect, so that the high quality of the product will be maintained. The record of corrective actions must be supplied to PNC, whenever necessary. These actions must be implemented in accordance with the manufacturer's quality assurance plan, which has previously been approved by PNC.

(2) Control of corrections by PNC
If any defect deviating from any of the requirements outlined in the drawings, specifications or manuals is detected during the manufacturing schedule, including a test or inspection by the manufacturer, PNC shall request the manufacturer to correct that defect by applying the following steps.
(a) If he detects a defect, the manufacturer shall check the state of the defect, and prepare a report indicating the nature of the defect, and describing the details of the defect. Thereafter, the manufacturer shall submit a report to PNC.
(b) The report must contain the details of the defect and the proposed measures to correct it.
(c) PNC shall examine (a) and (b) above and approve any corrections.
(d) The manufacturer shall carry out the necessary corrections.
(e) PNC shall verify and inspect any corrections.
If a defect is detected by an inspection conducted upon completion, or an acceptance inspection, such defect must be improved or corrected in accordance with negotiations between the internal parties concerned.

D.14 Quality control record

After the product has been completed, both PNC and the manufacturer must maintain a quality control record in accordance with the respective corporate rules. For this packaging, the quality control record shall include the following:
(1) Design
(2) Working drawing
(3) Specifications for approval
(4) Manufacturing manual and inspection manual
(5) List of names of inspectors for nondestructive inspection and qualified welders
(6) Material certificate and inspection records
(7) Audit results
(8) Other documents required by PNC

D.15 Quality assurance audit

PNC nominates people other than those in direct charge of manufacturing and repairs as auditors who will audit the manufacturer whenever necessary. The manufacturer shall have his quality assurance division periodically audit the quality control measures specified in the corporate rules in accordance with the check sheet to examine whether the departments involved in the manufacture of the packaging follow the quality assurance program, and to ensure that the program is effectively run.

CHAPTER IV OPERATION PROCEDURES AND MAINTENANCE CONDITIONS OF THE PACKAGE FOR NUCLEAR MATERIAL

(IV) Operation procedures and maintenance conditions of the package for nuclear material

This chapter describes the standard operation procedures conforming to the safety design of the package explained in chapter (II), as well as to the maintenance conditions of the package.

(IV)-A Operation procedures for the package (See Figs. (IV)-1 and (IV)-2.)

This section describes the standard operation procedures for the package at facilities that handle radioactive materials. The methods of loading and unloading the contents depends on whether such contents are fuel as described in Chapter (I), section D (two types of containers in the vertical position and in the horizontal position) or structural materials. Two methods for receiving fuel are described. The same method is applied to structural materials.

A.1 Procedures for loading the package

A.1.1 Acceptance of packaging

(1) After the inspection upon completion of a packaging (or the tests and inspections before first use) or the periodic inspection is finished, the packaging is brought to the specified place, and a visual inspection is conducted to check for defects in the packaging or the transport skid.

(2) All accessories (handling tools and others) and spares must be checked to make sure that they fit the descriptions on the list of accessories and that they have no defects.

(3) The instruction manual must be reviewed.

A.1.2 Placing the packaging in the loading position

(4) Horizontally lift the packaging with the lifting lug for horizontal operation together with the transport skid using a 4-point lifting wire-rope arrangement with a crane (with a rated load of 12.5 tons or more), and place them close to the loading position.

(5) Unseal and remove the front and rear shock absorbers of the packaging on the transport skid.

(6) Remove the bolts of the rear fixing device.

(7) Remove the bolts of the front fixing device, and remove the retaining piece.

(8) Remove the rear lid.

[When the packaging is to be set in a vertical position] (See Fig. (IV)-3.)

(9-P.1) Attach the lifting lug of the crane (with a rated load of 9.5 tons or more) to the lifting trunnion.

(9-P.2) Lift up the crane, and immediately move it toward the front of the packaging. Use the crane to lift the packaging onto the transport skid.

(9-P.3) Lift the packaging body with the crane, and install it upright in the cell port on the cell ceiling.

(9-P.4) To prevent the packaging from toppling over, attach a wire-rope in four directions and tie the packaging down using vertical tie-down devices.

[When the packaging is to be set in a horizontal position] (See Fig. (IV)-4.)

(9-H.1) Put a 4-point wire-rope arrangement or the equivalent in the lifting lug for horizontal operation attached to the back of the packaging. Use the crane (with a rated load of 9.5 tons or more) to lift up the packaging and attach it to the cell port on the side of the cell. Place the packaging on a level surface on an appropriate stand with the bases of the packaging.

A.1.3 Preparation for loading

(10) Remove the rear lid.

[When the packaging is to be set in a vertical position] (See Fig. (IV)-3.)

(11-P.1) Set the special elevating apparatus used to raise and lower contents on the top of the packaging, and bolt it down.
(11-P.2) Attach the lifting lug of the elevating apparatus into a threaded hole in the shielding plug.
(11-P.3) Remove the penetration hole lid.
(11-P.4) Pull out the orifice plug using the special tool designed for that purpose. [See Fig. (IV)-4.]
(11-P.5) Move the locking plate of the shielding plug lid aside. Detach the shielding plug and the shielding plug lid.
(11-P.6) Observe the load cell indicator of the elevating apparatus to check that the load is with the specified limit.
(11-P.7) Pull out the locking plug using the special tool designed for that purpose. [See Fig. (IV)-4.]
(11-P.8) Use the special tool to rotate the rotating plug 90° counterclockwise. Leave the tool kept in its place.
(11-P.9) Use the elevating apparatus to lower the inner container and the shielding plug to the specified place on the clean cell, checking the specified lowering distance by observing the distance indicator of the elevating apparatus.
(11-P.10) Remove the cap of the inner container in the specified position such as the inside of the clean cell.

[When the packaging is to be set in a horizontal position] (See Fig. (IV)-5.)

(11-H.1) Remove the penetration hole lid.
(11-H.2) Pull out the orifice plug using the special tool.
(11-H.3) Pull out the locking plug using the special tool.
(11-H.4) Use the special tool to rotate the rotating plug 90° counterclockwise. Leave the tool kept in its place.
(11-H.5) Screw the bar for horizontal operation into the threaded hole for the shielding plug.

(11-H.6) Move the locking plate of the shielding plug lid aside, and detach the shielding plug and the shielding plug lid.

(11-H.7) Push the inner container together with the shielding plug into the cell using the bar for horizontal operation. Remove the cap of the inner container.

A.1.4 Loading

A.1.4.1 Inserting fuel pins into the fuel supporting can or receiving tube

(12) The appropriate document must be checked to make sure that the contents meet the containment conditions (the number of fuel pins, weight, burnup, cooling time, radioactive intensity, heating value, etc.).

(13) A visual inspection must be conducted on the fuel supporting can, supporting can, rack, and receiving tube to check for deformation and damage.

[Fuel supporting can] (See Fig. (IV)-6.)

(14-C.1) Insert fuel pins in the sectioned ring gap of the double tube of the fuel supporting can in the hot cell. Weld the lid with a narrow slot. Use that narrow slot to vacuum the tube (at approximately 133 kPa), and introduce He gas into the vacuum. Pressurize the tube to 101 kPa and seal the narrow slot by welding it.

(14-C.2) Conduct a leakage test using a helium sniffer probe. The allowable value is 10^{-6} atm-cc/sec.

(14-C.3) Move the fuel supporting can to the decontamination cell and decontaminate it. Then, move the can to the specified place on the clean cell.

(14-C.4) Insert the fuel supporting can into the inner container. Then cap the inner container.

[Receiving tube I] (See Fig. (IV)-6.)

(14-T.1) Insert a fuel pin into each receiving tube I in the hot cell.

(14-T.2) Weld the receiving tube plug to completely close it.

(14-T.3) Move receiving tube I to the decontamination cell and decontaminate it. Then, move the tube to the specified place such as the clean cell.

(14-T.4) At the specified place such as the clean cell, insert receiving tube I into the rack.

(14-T.5) Set the rack and receiving tube I in the inner container. Then cap the inner container.

[Receiving tube II] (See Fig. (IV)-7.)

(14-S.1) Insert a fuel pin into each receiving tube II in the hot cell.

(14-S.2) Weld the plug of receiving tube II to completely close it.

(14-S.3) Move receiving tube II to the decontamination cell and decontaminate it. Then, move receiving tube II to the specified place such as the clean cell.

(14-S.4) At the specified place such as the clean cell, insert receiving tube II into the supporting can.

(14-S.5) Insert the supporting can together with receiving tube II into the inner container. Then cap the inner container.

A.1.4.2 Putting the inner container in the outer container

[When the packaging is to be set in a vertical position] (See Fig. (IV)-3.)

(15-P.1) While observing the indicator of the elevating apparatus, lift the inner container containing fuel and the shielding plug with the elevating apparatus, and put it in the outer container.
(15-P.2) Fix the shielding plug connected to the inner container to the shielding plug lid with the locking plate.
(15-P.3) Set the rotating plug back in its original position (the "closed" position) by rotating the special tool for the rotating plug 90° (clockwise) that has been left on the plug.
(15-P.4) Attach the locking plug with the special tool designed for that purpose.
(15-P.5) Attach the orifice plug with the special tool designed for that purpose.
(15-P.6) Bolt down the penetration hole lid applying the specified torque (approximately 25 N·m).
(15-P.7) Disconnect the elevating apparatus.
(15-P.8) Bolt the rear lid applying the specified torque (approximately 25 N·m).
(15-P.9) Attach the lifting lug on the crane (with a rated load of 9.5 tons or more) to the lifting trunnion.
(15-P.10) Remove the wire-rope for vertical tie-down.
(15-P.11) Lift up the packaging and move it over the transport skid. Install the pivoting trunnion onto the transport skid support. (Visually check that the lifting trunnion and its weld to make sure there are no defects.)
(15-P.12) Lower the crane, and move it until it is over the packaging using the pivoting trunning receiver as a support point. Lay the packaging on its side on the transport skid.
(15-P.13) Measure the dose equivalent rate in the front section of the package to make sure that it is normal.
(15-P.14) Bolt the front lid applying the specified torque (approximately 25 N·m).
(15-P.15) Fix the packaging body to the transport skid using front and rear fixing devices.

[When the packaging is to be set in a horizontal position] (See Fig. (IV)-5.)

(15-H.1) Put the inner container that contains the fuel and the shielding plug into the packaging using the bar for horizontal operation.
(15-H.2) Fix the shielding plug connected to the inner container to the shielding plug lid using the locking plate.
(15-H.3) Disconnect the bar for horizontal operation from the shielding plug.
(15-H.4) Bolt down the rear lid applying the specified torque (approximately 25 N·m).
(15-H.5) Set the rotating plug back in its original position (the "closed" position) by rotating the tool for the rotating plug 90° (clockwise) that is still attached to the plug.
(15-H.6) Attach the locking plug using the special tool designed for that purpose.
(15-H.7) Attach the orifice plug using the special tool designed for that purpose.
(15-H.8) Bolt down the penetration hole lid applying the specified torque (approximately 25 N·m).
(15-H.9) Attach a 4-point wire-rope arrangement to the lifting lug for horizontal operation on the back of the packaging. Lift the packaging with the crane (with a rated load of 9.5 tons or more) to separate it from the cell port. While horizontally lifting it, install the packaging on the transport skid. (Visually check that the lifting lug for horizontal operation and its weld are not defective.)

(15-H.10) Measure the dose equivalent rate in the front section of the package to make sure that the rate is normal.
(15-H.11) Bolt down the front lid applying the specified torque (approximately 25 N·m).
(15-H.12) Fix the packaging body to the transport skid using the front and rear fixing devices.

A.1.5 Preparation for transport

A.1.5.1 Measurement of the dose equivalent rate and inner pressure

(16) The dose equivalent rate must be measured on the surface and at a distance of 1 m apart from the surface of the package, and the measured values must be recorded. The measured values on the surface in the side section of the package and at a distance of 1 m apart from the surface must be checked to make sure that the values meet the engineering criteria (2 mSv/h or less on the surface, and 0.1 mSv/h at a distance of 1 m apart from the surface).

(17) Remove the rear sampling valve lid (or the front sampling valve lid), and measure the inner pressure using the sampling valve (quick coupler). Check that the measured value is within design conditions (60 kPa or less).

(18) Bolt down the rear sampling valve lid (or the front sampling valve lid) applying the specified torque (approximately 25 N·m).

A.1.5.2 Leakage test

(19) Check that locking bolts of each lid have been tightened by applying the specified torque.

Shielding plug lid	Approximately 110 N·m
Rear lid	Approximately 25 N·m
Rotating plug lid	Approximately 110 N·m
Front lid	Approximately 25 N·m
Rear sampling valve lid	Approximately 25 N·m
Front sampling valve lid	Approximately 25 N·m
Penetration hole lid	Approximately 25 N·m

(20) Remove the leakage detection hole plug of the rear lid, front lid, rear sampling valve lid, front sampling valve lid, and penetration hole lid. Pressurize the gap of the double O-ring of each lid using Freon-12 up to 196 kPa (G). Then, conduct a halogen leakage test to make sure that the leakage rate is 10^{-5} atm cc/sec or less.

(21) Tighten the leakage detection hole plug applying the specified torque (approximately 15 N·m).

A.1.5.3 Preparation for transport

(22) Attach the front and rear shock absorbers to the packaging body. Bolt them down applying the specified torque (approximately 100 N·m). Seal the packaging with a wire seal.

(23) Attach nuts and bolts in the lug holes used to vertically tie down the packaging body to prevent these lugs from being unintentionally used for lifting.

(24) Measure the dose equivalent rate on the surface and at a distance of 1 m apart from the surface of the package, and record these measurements. Check that the measured values are within the engineering criteria (2 mSv/h or less on the surface, and 0.1 mSv/h or less 1 m from the surface).

(25) Measure the radioactive contamination on the package surface, and record these measurements. Check that the measured values are within the engineering criteria (4 Bq/cm^2 or less for emitted β and γ nuclides, and 0.4 Bq/cm^2 for emitted α nuclide).

(26) Measure the temperature on the package surface, and record these measurements. Check that the measured values are within the engineering criteria (85°C or less on the surface).

(27) Visually inspect the wire seal, transport skid, and the whole package to make sure that there are no defective parts.

(28) Collate all the articles, which will be transported together with the package, with the accessories list. Prepare the transport confirmation certificate and the inspection records.

A.2 Inspections before shipping the package

Table (IV)-1 summarizes tests and inspections described in A.1 "Procedures for Loading the Package," and shows inspections before shipping the package.

Table (IV)-1 Manual for Inspections before Shipping the Package

(1/2)

Inspection Item	Object to be Inspected	Inspection Method	Acceptance Criterion
Visual inspection	Package and transport skid	Visually inspect the exterior of the package.	No harmful damage, dirt, or corrosion. All components are set in place in a normal state.
Lifting inspection	Lifting trunnion and lifting lug for horizontal operation	Visually inspect the exterior of the lifting lug and its weld before and after lifting the package.	No defects such as deformation and cracking
Weight inspection	Package	Check the weight of the package by adding the weight of contents (obtained via a contents inspection) to the weight of the empty packaging (obtained by an inspection conducted upon completion).	The value must be within design conditions (11,000 kg or less).
Surface radioactive contamination inspection	Package	Inspect the surface radioactive contamination of the package by applying the smear method.	The measured values must be 4 Bq/cm^2 or less for emitted β and γ nuclides and 0.4 Bq/cm^2 for emitted α nuclide.
Dose equivalent rate inspection	Package	Inspect the dose equivalent rate of γ rays and neutrons on the surface and at a distance of 1 m apart from the surface of the package.	The measured values must be 2 mSv/h or less on the surface and 0.1 mSv/h or less at a distance of 1 m apart from the surface.

Inspection Item	Object to be Inspected	Inspection Method	Acceptance Criterion
Contents inspection	Inner container, containers (fuel supporting can, supporting can, receiving tube, and rack), and contents (irradiated fuel pin and irradiated structural materials)	Check the condition of the inner container and other containers (appearance, dimensions, weight, etc.) by referring to the relevant documents. Check the condition of the contents (weight, burnup, cooling time, radioactivity intensity, heating value, etc.) by referring to the relevant documents.	All values must match design values.
Leakage test	(1) Fuel supporting can (2) Outer container (front and rear lids, front and rear sampling valve penetration hole lids, and rotating plug penetration hole lid)	(1) Inspect the leakage rate applying a helium leakage test. (2) Pressurize the gap in the double O-ring of each lid using Freon-12, and inspect the leakage rate applying a halogen leakage test.	(1) The measured value must match the design value (10^{-6} atm • cc/sec or less). (2) The measured value must match the design value (10^{-5} atm • cc/sec or less).
Inner pressure measurement	Outer container	While the contents are in the package, measure the inner pressure using a sampling valve.	The measured value must be within the design limit (60 kPa (G) or less).
Surface temperature measurement	Package	Measure the temperature on the package surface using a thermometer.	The measured values on the surface must be 85°C or less.
Subcriticality inspection	Fuel supporting can I Fuel supporting can II Rack Supporting can	Visually check the shape. Measure the external outline and pitch, or check these measured values with the records.	No deformation or damage. Outside diameter of the inner cylinder 60.5 ± 2 mm Outside diameter of the inner cylinder 42.7 ± 2 mm Pitch diameter 70 ± 2 mm Outside diameter of the inner cylinder 42.7 ± 2 mm

A.3 Unloading method

A.3.1 Accepting the package

(1) Put the package containing fuel or structural materials in the authorized place within the controlled area.
(2) Measure the dose equivalent rate on the surface and at a distance 1 m from the surface of the package and the density of the radioactive material on the surface to make sure that the measured values are normal.
(3) Check that all necessary documents including the transport confirmation certificate, lists of accessories, and inspection records have been prepared.
(4) Visually inspect the package seal, transport skid, and the whole outer surface of the package to make sure that there is no visible damage.
(5) Check that accessories such as spare parts and tools are not damaged, and that they are as described on the lists of accessories.
(6) Review the instruction manual.
(7) Remove the wire for the seal. Remove the fastening bolts of the front and rear shock absorbers. Detach the shock absorbers from the body.
(8) Visually inspect the front and rear lids, front and rear sampling valve lids, and penetration hole lid to make sure that they have been properly tightened.
(9) After the front and rear shock absorbers have been detached from the body, measure the dose equivalent rate and the density of radioactive material on the surface of the packages to make sure that all the measured values are normal.
(10) Remove the rear sampling valve. Measure the inner pressure of the package and the degree of contamination in the package to make sure that all the measured values are normal. Then, reduce the pressure in the package to 101.3 kPa.
(11) Bolt the rear sampling valve lid applying the authorized torque (approximately 25 N·m).

A.3.2 Setting the package in the unloading position

(12) Remove the bolts of the rear fixing device.
(13) Remove the bolts of the front fixing device. Remove the retaining piece.
(14) Remove the front lid.
(15) Measure the dose equivalent rate in the front section of the package to make sure that the rate is normal.

[When the package is to be set in a vertical position] (See Fig. (II)-3.)

(16-P.1) Attach the lifting equipment fitted on the crane (with a rated load of 9.5 tons or more) to the lifting trunnion.
(16-P.2) Lift the crane, and immediately move it toward the front end of the package so that it can be erected on the transport skid.
(16-P.3) Lift the package body with the crane, and place the package upright in the cell port on the top of the cell.
(16-P.4) To prevent the package from falling over, use the fastening lug in the vertical position to attach a wire rope from four directions and fasten the package.

[When the package is to be set in a horizontal position] (See Fig. (IV)-5.)

(16-H.1) Attach a 4-point lifting wire-rope arrangement to the lifting lugs for horizontal operation located at the back of the package. Lift the package with the crane (with a rated load of 9.5 tons or more), and attach it to the cell port on one side of the cell. Then, place the package horizontally on an appropriate stand using the package's base plates.

A.3.3.1 Separating the inner container from the outer container

(17) Remove the rear lid.

[When the package is to be set in a vertical position] (See Fig. (IV)-3.)

(18-P.1) Set the specified elevator apparatus, which is used to raise and lower the contents, on rear end of the package. Bolt the elevator apparatus to the package.
(18-P.2) Attach the lifting lug of the elevator apparatus by screwing it into the hole of the shielding plug.
(18-P.3) Remove the penetration hole lid.
(18-P.4) Pull out the orifice plug using the special tool designed for that purpose.
(18-P.5) Move the locking plate of the shielding plug lid aside, and detach the shielding plug from the shielding plug lid.
(18-P.6) Check the load cell indicator of the elevator apparatus to make sure that the load is as specified.
(18-P.7) Pull out the locking plug using the special tool designed for that purpose.
(18-P.8) Rotate the rotating plug 90° counterclockwise using the special tool. Leave the special tool on the plug.
(18-P.9) While reading the specified distance for lowering the inner container on the distance indicator of the elevating apparatus, lower the inner container together with the shielding plug to a specified place in a clean cell or the like. Remove the cap of the inner container.

[When the package is to be set in a horizontal position] (See Fig. (II)-4.)

(18-H.1) Remove the penetration hole lid.
(18-H.2) Pull out the orifice plug using the special tool.
(18-H.3) Pull out the locking plug using the special tool.
(18-H.4) Rotate the rotating plug 90° counterclockwise using the special tool. Leave the special tool on the plug.
(18-H.5) Attach the bar for horizontal operation by screwing it into the hole of the shielding plug.
(18-H.6) Move the locking plate of the shielding plug lid aside, and detach the shielding plug from the shielding plug lid.
(18-H.7) Push the inner container together with the shielding plug into a specified place in a clean cell or the like using the bar used for horizontal operation. Remove the cap of the inner container.

A.3.3.2 Unloading fuel pins from the fuel supporting can, supporting can or receiving tube

[Fuel supporting can] (See Fig. (II)-6.)

(19-C.1) In a specified place such as a clean cell, take the fuel supporting can out of the inner container.
(19-C.2) Move the fuel supporting can to a specified place such as a hot cell.
(19-C.3) In a specified place such as a hot cell, open the fuel supporting can by cutting off the top of the can. Then remove the fuel pins from the can.
(19-C.4) The fuel supporting can must be disposed of.

[Receiving tube I] (See Fig. (IV)-6.)

(19-T.1) In a specified place such as a clean cell, remove the rack along with receiving tube I from the inner container.
(19-T.2) In a specified place such as a clean cell, remove receiving tube I from the rack. Then move it into the hot cell.
(19-T.3) In a specified place such as a hot cell, open receiving tube I by cutting off the top of the tube. Then remove the fuel pins from the tube.
(19-T.4) Receiving tube I must be disposed of.

[Receiving tube II] (See Fig. (IV)-7.)

(19-S.1) In a specified place such as a clean cell, remove the supporting can along with receiving tube II from the inner container.
(19-S.2) In a specified place such as a clean cell, remove receiving tube II from the supporting can. Then move it into the hot cell.
(19-S.3) In a specified place like a hot cell, open receiving tube II by cutting off the top of the tube. Remove the fuel pin.
(19-S.4) Receiving tube II must be disposed of.

A.4 Preparing the empty packaging

(1) Remove the front lid of the packaging that has been installed on the transport skid (with the front and rear shock absorbers removed).

(2) Measure the density of radioactive material in the packaging, and check that the measured values meet the criteria (400 Bq/cm^2 or less for emitted β and γ nuclides and 40 Bq/cm^2 or less for emitted α nuclides).

(3) Bolt the front lid using the specified torque (approximately 25 N·m).

(4) Check that the bolts of each lid have been tightened by applying the specified torque:

Shielding plug lid	Approximately 110 N·m
Read lid	Approximately 25 N·m
Rotating plug lid	Approximately 110 N·m
Front lid	Approximately 25 N·m
Rear sampling valve lid	Approximately 25 N·m
Front sampling valve lid	Approximately 25 N·m
Penetration hole lid	Approximately 25 N·m

(5) Remove each leakage test hole plug from the rear lid, front lid, rear sampling valve lid, front sampling valve lid, and penetration hole lid. Pressurize the gap in the double O-ring of each lid to 192 kPa(G) using Freon-12. Conduct a halogen leakage test to make sure that the leak from each lid is 10^{-5} atm-cc/sec or less.

(6) Tighten the leakage test hole plug to the specified torque (approximately 15 N·m).

(7) Set the front and rear shock absorbers to the packaging body. Bolt them down applying the specified torque (approximately 100 N·m). Seal the body with a wire seal.

(8) Screw a nut and bolt into the hole of the fastening lug in the vertical position of the packaging to prevent this lug from being unintentionally used as a lifting lug.

(9) Measure the dose equivalent rate on the surface of the package, and record the measured value. Check that this value meets the criteria (0.5 mSv/h or less on the surface).

(10) Measure the density of radioactive material on the packaging surface and record the measured values. Check that the measured values meet the criteria (0.4 Bq/cm^2 for emitted β and γ nuclides and 0.04 Bq/cm^2 for emitted α nuclide).

(11) Visually inspect the wire seal, transport skid, and the packaging in general to make sure that they are not damaged and they are complete.

(12) Collate all articles to be prepared together with the packaging using the accessories list. Prepare the inspection records and other required documents.

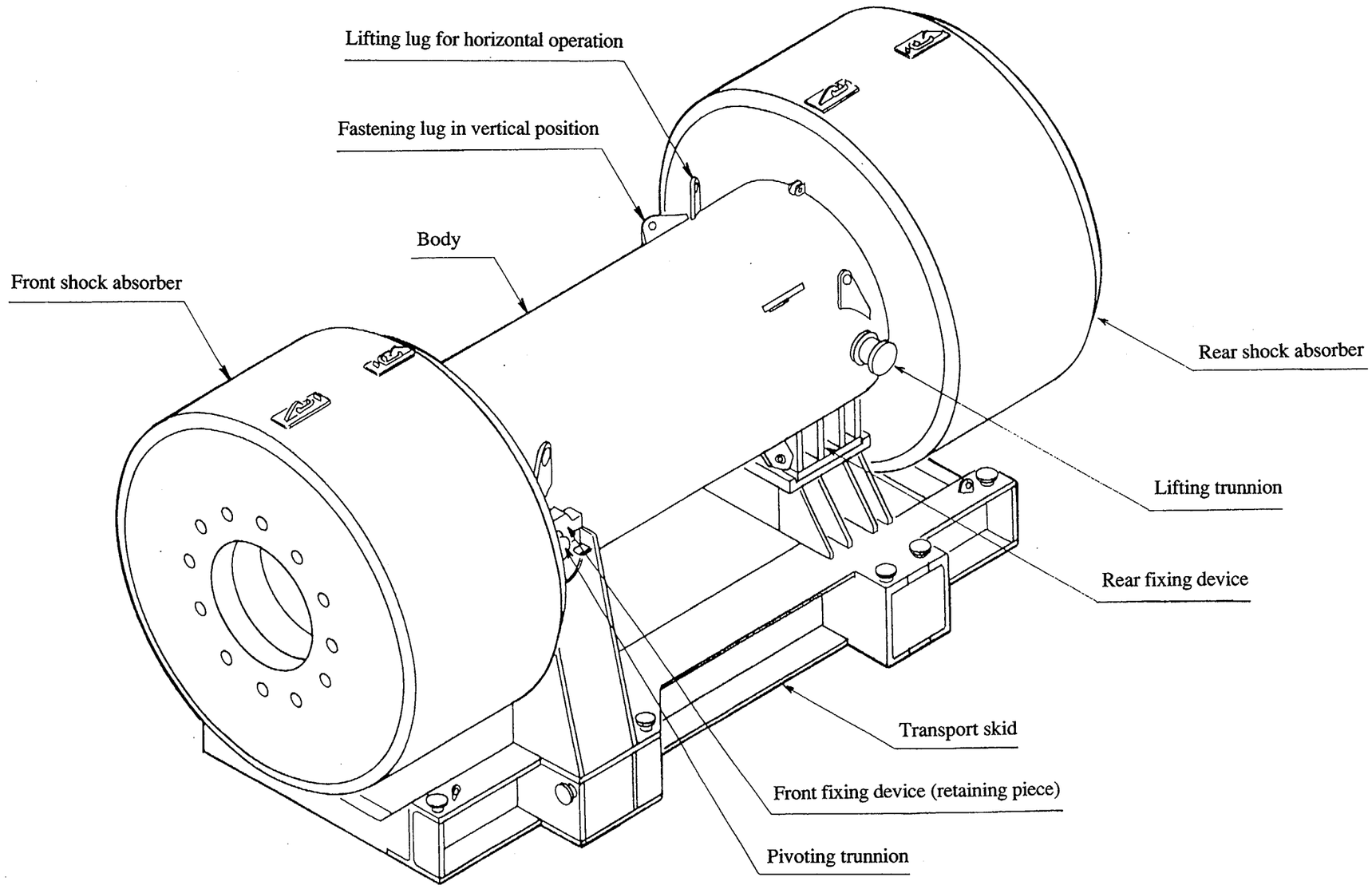

Fig. (IV)-1 Schematic Drawing of Packaging Equipped with the Skid for Transportation

ANSTEC APERTURE CARD
Also Available on Aperture Card

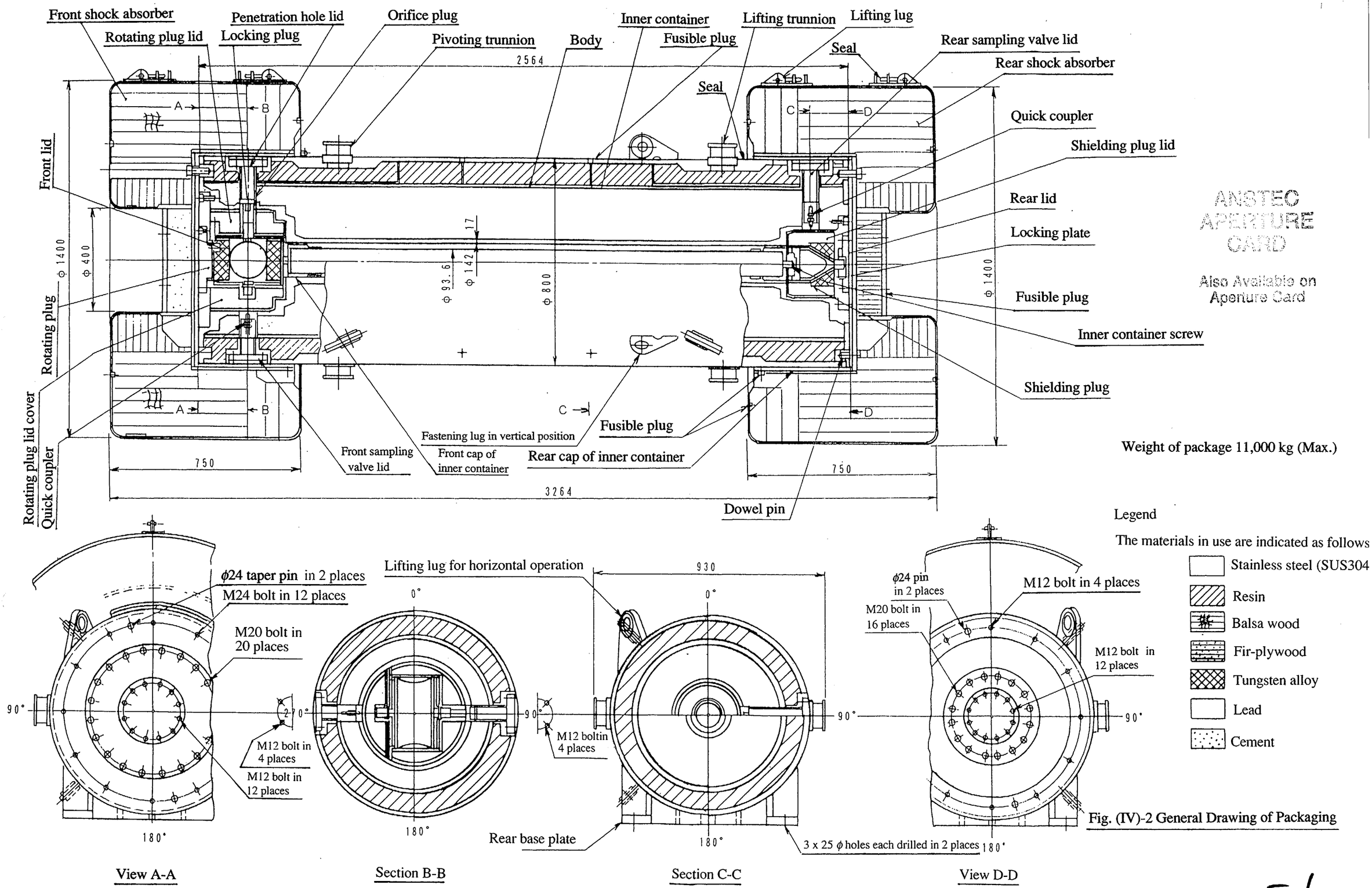

Fig. (IV)-2 General Drawing of Packaging

ANSTEC APERTURE CARD
Also Available on Aperture Card

9601260203 -56

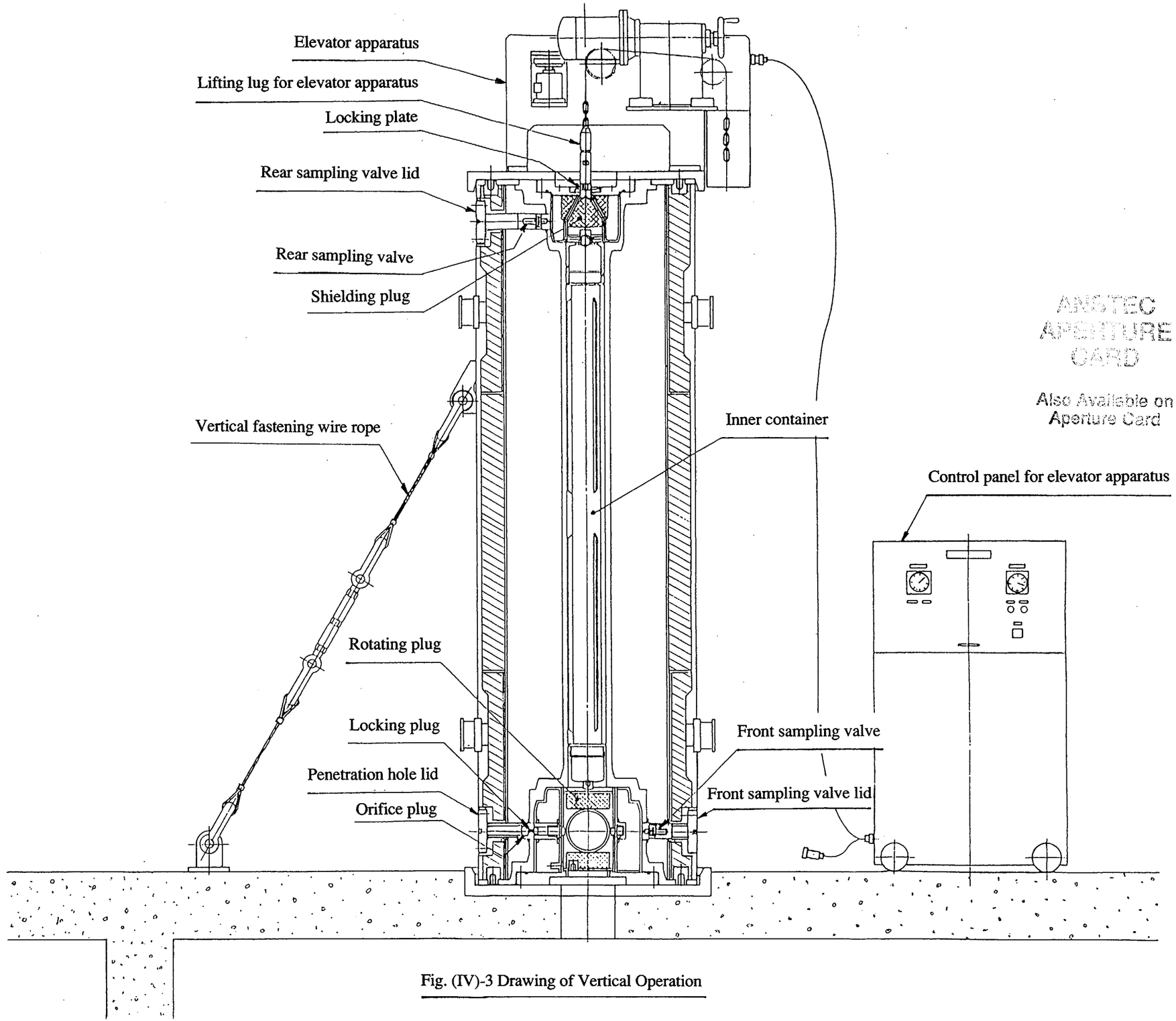

Fig. (IV)-3 Drawing of Vertical Operation

ANGTEC
APERTURE
CARD

Also Available on
Aperture Card

9601260203-57

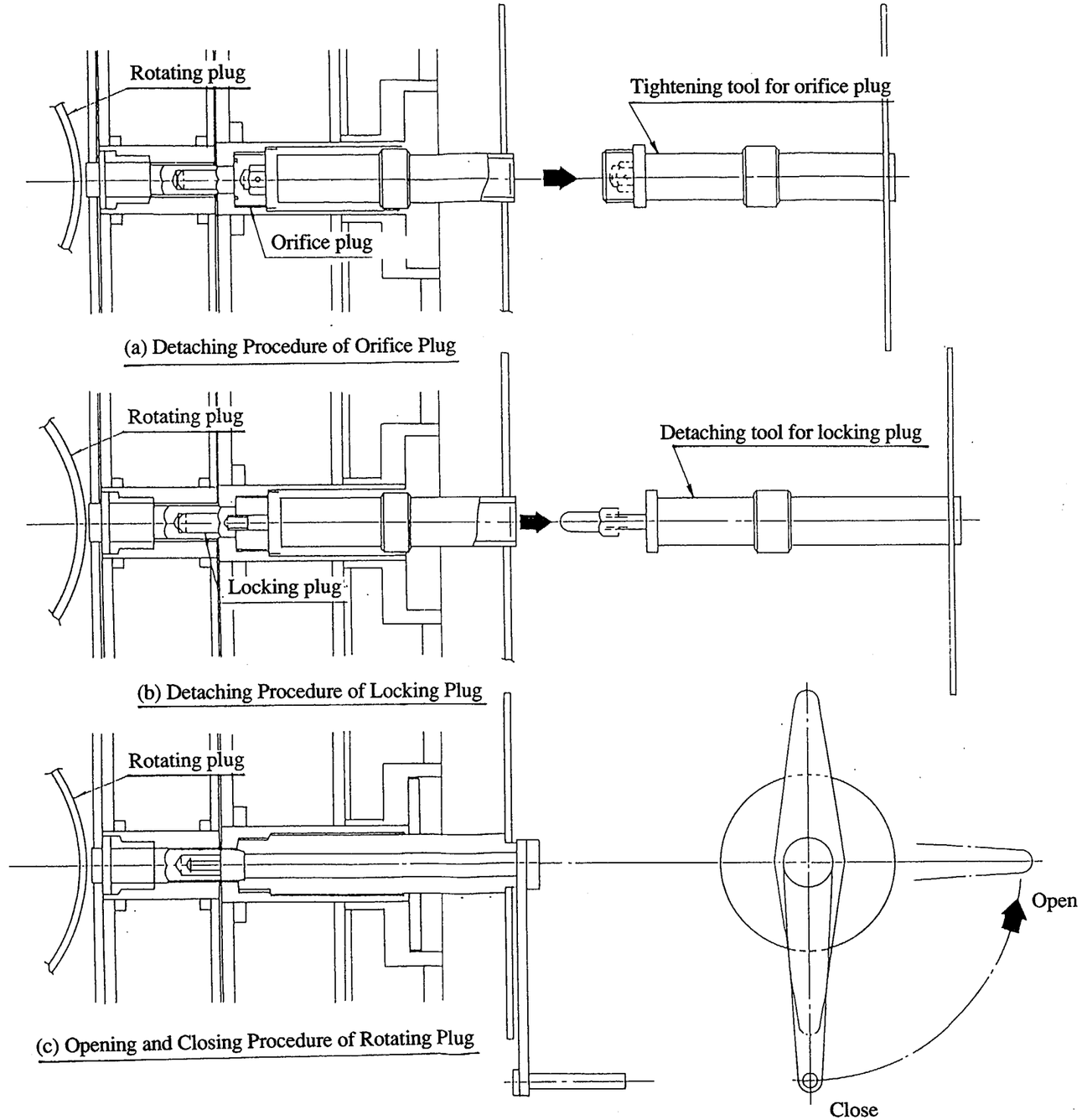

Fig. (IV)-4 Opening and Closing Procedures of Rotating Plug

ANSTEC
APERTURE
CARD

Also Available on
Aperture Card

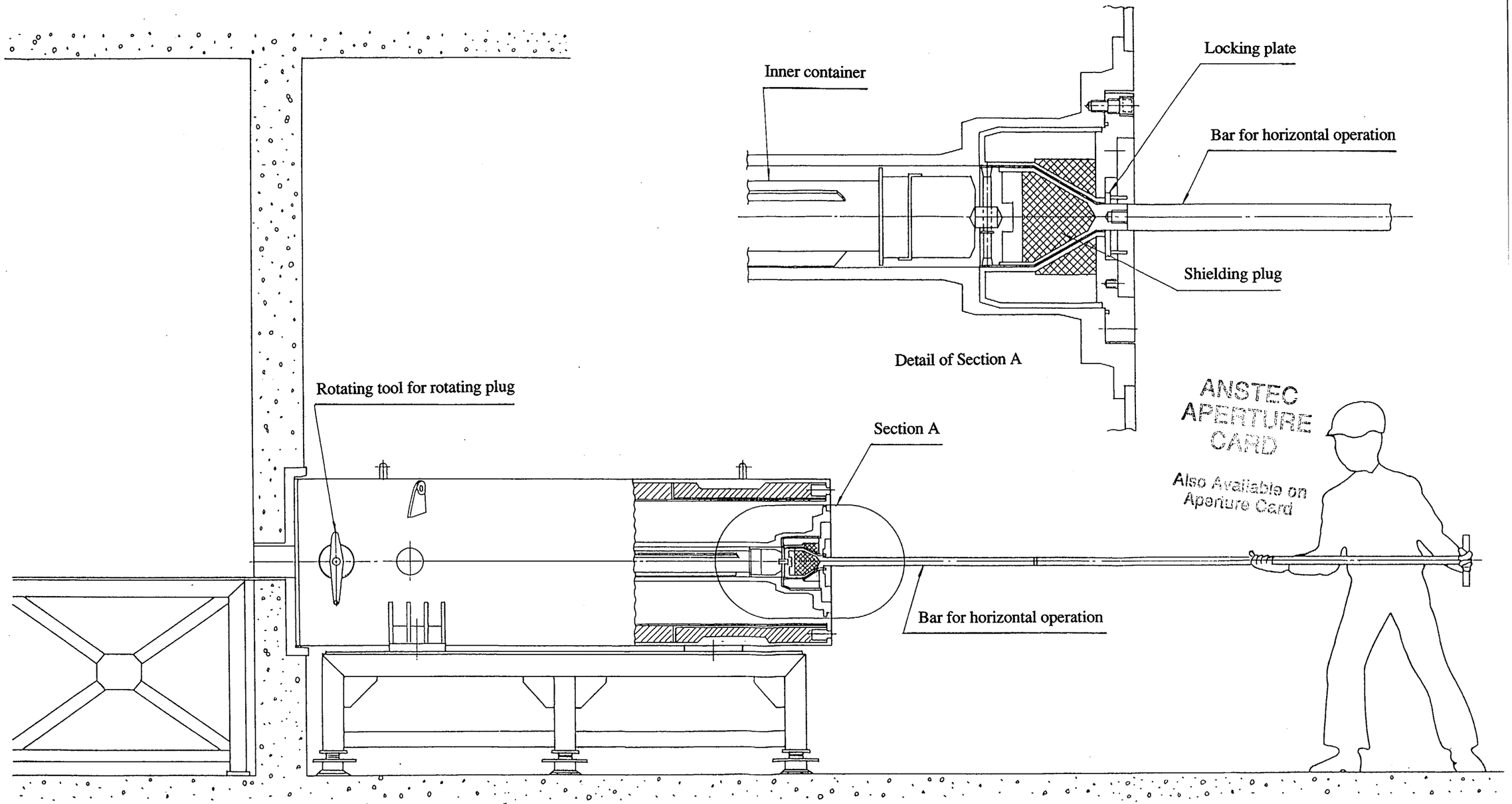

ANSTEC
APERTURE
CARD
Also Available on
Aperture Card

Fig. (IV)-5 Drawing of Horizontal Operation

9601260203 -59

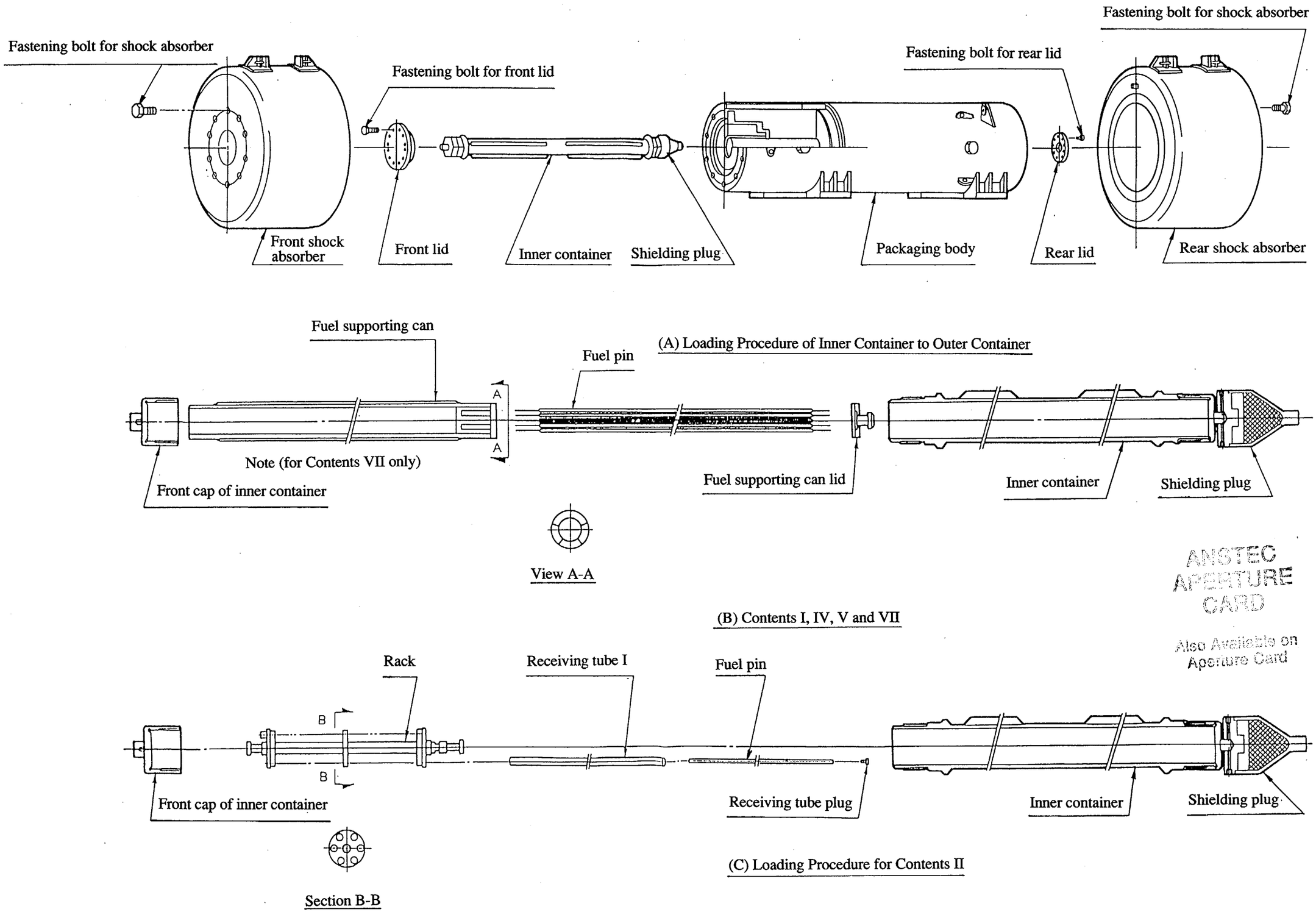

ANSTEC APERTURE CARD
Also Available on Aperture Card

Fig. (IV)-6 Loading Procedures for Contents (1/2)

9601260203 - 60

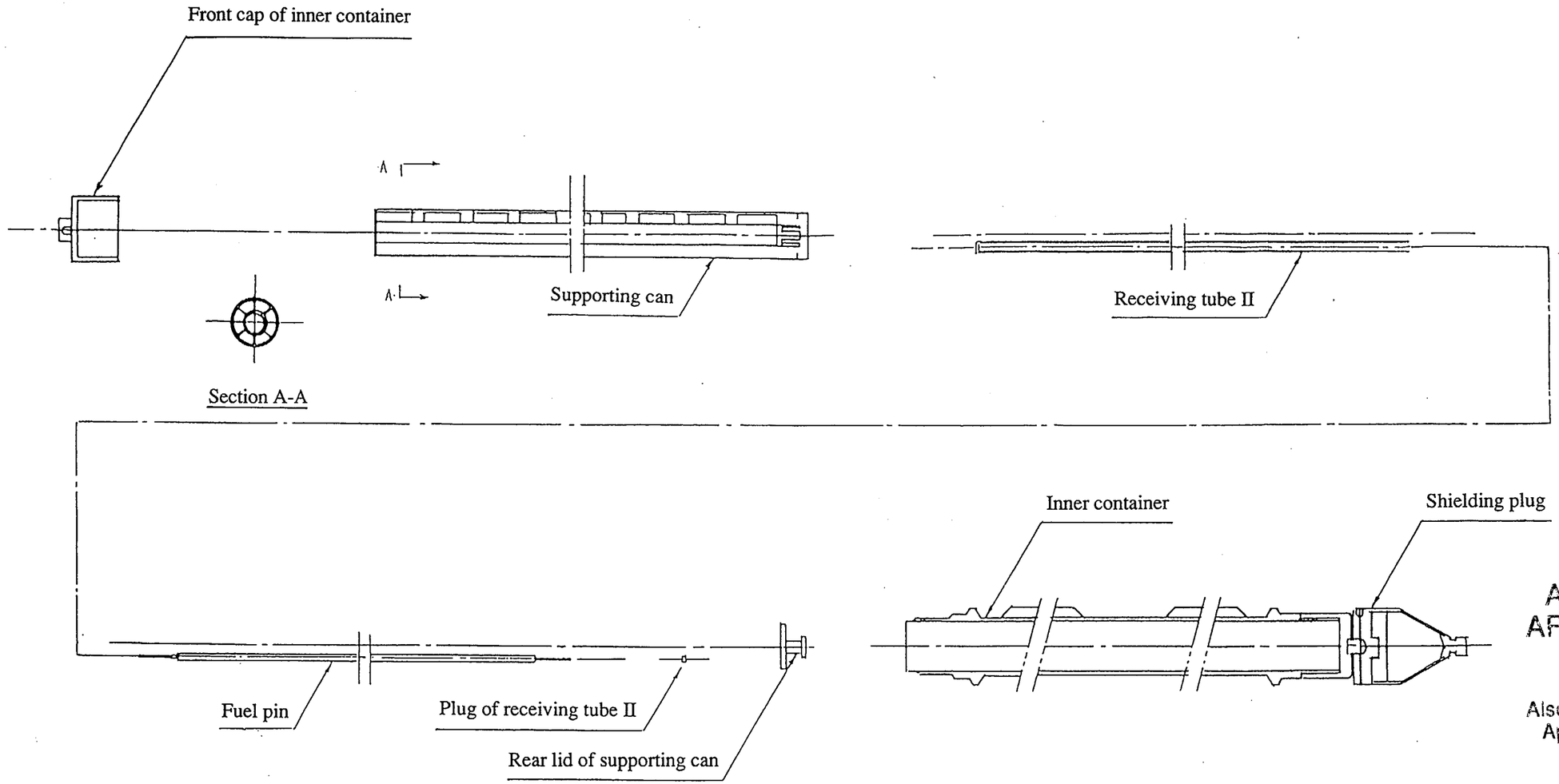

ANSTEC
APERTURE
CARD

Also Available on
Aperture Card

(D) Loading Procedure for Contents VI and VIII

Fig. (IV)-7 Loading Procedure for Contents (2/2)

9601260203 -61

(IV)-B Maintenance Conditions (See Fig. (IV)-2.)

The performance of the packaging must be maintained through the inspections listed in Table (IV)-2 to ensure its soundness.

The inspections outlined in Table (IV)-2 must be conducted once every year (or at least once per ten uses for any packaging that is used more than ten times in a year) to make sure that the packaging maintains its soundness. Periodic inspection records must be maintained together with the manufacturing records during the term of validity of approval for the packaging.

This section describes each inspection.

B.1 Visual and pressure inspections

B.1.1 Visual inspection

A visual inspection must be conducted on the external surface of the packaging, lifting and pivoting trunnions welded to the external surface, lifting lug for the horizontal operation, front and rear base plates, fastening lug in the vertical position, shock absorbers, and shock absorber lifting lugs, to check that they have not been damaged, cracked, or deformed, and that the fusible plugs on the surface of the body and shock absorbers are normal.

B.1.2 Pressure inspection

Water or pneumatic pressure (294 kPa(G) (1.5 times greater than the maximum operating pressure) must be maintained in the inner shell of the packaging using the rear sampling valve (or the front sampling valve). While checking that no part of the containment system is deformed.

B.2 Leakage test

A helium leakage test (gas-filled envelope method) must be conducted using the front and rear sampling valves to make sure that the leakage rate is 1×10^{-5} atm-cc/sec or less.

B.3 Maintenance of the auxiliary system

This is not applied because the packaging is not equipped with an auxiliary system.

B.4 Maintenance of the valves and gaskets

As described in B.2, leakage tests on the valves and gaskets must be conducted for each transport. If a detected leakage is more than or equal to the specified value, the defective part must be replaced.

If any damage or defective part is detected in the packaging by an inspection before shipment, or by a periodic inspection, repair or replacement must be carried out, depending on the degree of the damage or defect.

Table (IV)-3 shows the maintenance plan of the gaskets and bolts.

Table (IV)-2 List of Periodic Inspections

(1/2)

Inspection Item	Object to be Inspected	Inspection Method	Acceptance Criterion
Visual inspection	Body, inner container, front and rear shock absorbers, fuel supporting can, rack, receiving tube, and supporting can	Visually inspect the exterior of the objects.	No harmful damage, cracks, or deformation. The fusible plugs must be normal.
Pressure inspection	Body (sealed)	Apply water pressure (or pneumatic pressure), measuring 294 kPa(G).	No part of the packaging body must be deformed.
Leakage test	Body (sealed)	A helium leakage test must be conducted to check the leakage rate.	The leakage rate must meet design criteria (1 x 10^{-5} atm-cc/sec or less).
Maintenance of the valves and gaskets	See Table (IV)-4.	Same as left box	Same as left box
Shielding dimension test	Body, inner container, and front and rear shock absorbers	Visually inspect the exterior.	No harmful damage, cracks, or deformation
Subcriticality inspection	Fuel supporting can, rack, receiving tube, and supporting can.	Visually inspect the exterior.	No harmful damage, cracks, or deformation
Thermal test	Body, inner container, and front and rear shock absorbers	Visually inspect the exterior.	No harmful damage, cracks, or deformation
Operational and functional inspection	Rotating plug and locking plate	Set a manual handle to the rotating plug and manipulate the handle to open and close the plug. Attach the inner container to the shielding plug via the locking plate.	Normal operation and effective function

Table (IV)-3 Maintenance Plan for Replacement Parts

Component	Frequency	Inspection/Action
Rear sampling valve, front sampling valve	At least once a year (or at least once per ten uses of the packaging if it is used more than ten times in a year)	A halogen leakage test must be conducted. Replace if the leakage rate is 10^{-6} atm-cc/sec or more.
Shielding plug lid O-ring, Rotating plug lid O-ring	Same as above	Replace
Rear lid O-ring, front lid O-ring, rear sampling valve lid O-ring, front sampling valve lid O-ring, and penetration hole lid O-ring	For each transport	If a visual inspection detects a defect, replace the O-rings. Regardless of the results of the visual inspection, replace the O-rings once a year (or once per ten uses if the packaging is used more than ten times in a year).
Shielding plug lid fastening bolt, rotating plug lid fastening bolt	At least once a year (or at least once per ten uses, if the packaging is used more than ten times in a year).	Inspect the condition of the surface for damage, etc. If any defect is found, replace the bolts.
Rear lid fastening bolt, front lid fastening bolt, rear sampling valve lid fastening bolt, front sampling valve lid fastening bolt, penetration hole lid fastening bolt, and shock absorber fastening bolt	For each transport	Same as above

B.5 Shielding dimension test

The shielding dimension test calls for a visual check of the main parts of the packaging to make sure that they do not have any defects that may adversely affect shielding integrity.

B.6 Subcriticality inspection

The visual inspection is conducted on the fuel supporting can to contain Contents I, IV, V, and VII, rack and receiving tube I to contain Contents II, and supporting can and receiving tube II to contain Contents VI and VIII in order to make sure that these cans, tubes, and rack do not have any defects such as deformation or other damage.

B.7 Thermal test

A visual inspection is conducted on the heat dispersion fins of the packaging to make sure that the fins are not deformed in a way that may deteriorate their capability to disperse heat.

B.8 Others

(1) Operational and functional inspection

This test checks the operability of the rotary mechanism of the rotating plug, as well as the moving parts of the locking plate, etc. If any defective part is found, it must be replaced.

CHAPTER V SPECIAL NOTES ON SAFETY DESIGN AND SAFETY TRANSPORTATION

(V) Special Notes on Safety Design and Safety Transportation

There are no points that must be specially noted regarding safety design and safety transportation.