Revision_____

Date_____

BWR SYSTEMS

LESSON PLAN

A. RECIRCULATION SYSTEM

B. REFERENCES

1. BWR Systems Manual, Chapters 2.5 and 3.2
2. Recirculation System GEK 779, Vol. II
3. Brown's Ferry Technical Specificatons
4. Reference Card File 2.5
5. Operating Instructions

C. OBJECTIVES

1. Fully understand the purpose of the system and its design basis
2. Major system components and flow paths
3. Significant system instrumentation and interlocks
4. Relationships between the Recirculation System and other systems
5. Technical Specifications governing the system

D. DESCRIPTION

1. Function

   a. Provides variable forced circulation of water through the reactor core; thereby able to achieve higher specific power and control flow distribution to all channels. By varying the flow rate, different power densities can be achieved and power level changed.

2. Components & Flow Path

   a. Components (Fig. 1)

      - Motor operated suction valve

2) Variable speed pump

3) Motor operated pump discharge valve

4) Jet pump ring header

5) Each loop supplies 10 jet pumps

6) Crosstie and crosstie bypass valves

7) Recirc System MG Set.

b. Flow Paths (Fig. 2)

1) Recirc pump suction from reactor vessel downcomer region between groups of jet pumps

2) Two separate loops

3) Discharge of recirc pump passes through a flow element and is routed to a ring header (not a complete ring)

4) Flow from each recirc pump goes from ring header to reactor vessel via 5 riser pipes

5) Internal to the reactor vessel each riser feeds two jet pump nozzles via a ram's head arrangement

6) In the jet pumps the driving flow (from the recirc pumps) mixes with the driven or secondary flow from the vessel downcomer region (dryer and separator drains plus feed flow) and returns, via the jet pump diffuser to the core inlet plenum.

7) The total recirculation system flow passes through the core

a) 90% of flow through fuel channels

b) 10% of flow bypasses fuel due to designed leakage. This flow prevents excessive voiding in the area of the LPRM's and increases their accuracy.

8) 100% core flow = 102.5×10^6 lb/hr

a) $\sim 34 \times 10^6$ lb/hr is driving flow

b) ~68 x 10^6 lb/hr is driven flow

c) ~13.4 x 10^6 lb/hr of the above is taken as steam flow; this being made up by feedwater flow. Recirculation ratio is 8/1

E. COMPONENT DESCRIPTION (Fig. 2)

1. Recirculation Loop Outlet

   a. ~28" recirculation loop suction piping

2. Pump Suction Valve

   a. 28" Gate Valve

   b. Designed to open against a 50 psi differential. (Equivalent to the static head of water in the reactor vessel.)

3. Pump Discharge Valve

   a. 28" Gate Valve

   b. Designed to open against a 200 psi differential. (Equivalent to about shutoff head of the recirculation pump.)

   c. Originally this plant had a 4" bypass valve around the pump discharge valve. However, due to cracking problems found at various BWR facilities in the discharge valve bypass line many facilities including BFNP removed the bypass line and modified the recirculation pump starting sequence.

4. Recirculation Pump and Motor

   a. 8000 HP variable speed induction motor (4 pole, 345-1725 RPM at 11.5 to 57.5 HZ Supply frequency

   b. Possible speed range

      1) Minimum Speed: 345 RPM - 11.5 HZ - 20%

      2) Maximum Speed: 1725 RPM - 57.5 HZ - 100%

      3) Minimum Speed*: 483 RPM - 16.1 HZ - 28%
         * As limited by speed controller

c. Pump Flow Rating (design conditions **)

1) 12,650 GPM at 28% speed

2) 45,200 GPM at 100% speed

** The Generator and Pump Motor are not designed to pump 100% rated flow when pumping cold water. If attempt is made to do so a limiting condition of generator stator amps will be reached prior to attaining 100% speed.

d. Pump Motor Limits

1) Rated Voltage: 3920 VAC at 70V/HZ

2) Rated Current: 965 Amps

3) Maximum winding temperature 216°F

e. Restart Capabilities

1) Two consecutive starts allowed from motor ambient temperature

2) One start allowed from motor operating temperature

NOTE: Further starts require an intervening cooling period of 45 minutes.

f. Cooling Water Requirements

1) Supplied by RBCCW

2) Motor oil cooler 11.5 GPM

3) Pump seal assembly 47 GPM

g. Pump Seal Assembly (Fig. 3, 4 & 5)

1) Seal cartridge assembly consists of two sets of sealing surfaces and breakdown bushing assemblies

a) The #1 seal

b) The #2 seal

c) Under normal operating conditions each seal provides a 500 psi drop across its surface

d) These sealing surfaces form two cavities from which the above pressures are measured.

(1) No. 1 cavity at reactor pressure (1000 psig @ rated)

(2) No. 2 cavity at 50% reactor pressure (500 psig @ rated)

NOTE: Flow is controlled internally through the seal assembly so that these pressures are maintained.

2) Seal Purging

a) Seal purge water from control rod drive system downstream of the supply filters keeps number one seal cavity clean by flowing out of the seal area, along the pump shaft, and into the recirculation system.

b) A flow of 2 1/2 to 3 GPM goes to each pump through a restricting orifice, flow regulator, and rotameter

c) The purge reduces the possibility of seal damage due to ingesting dirt from an unclean piping system

3) Seal Flow

a) During normal operation of the seal some flow through the seal assembly is required to allow each seal to accept 1/2 of the pressure drop (normally 500= each).

(1) Normal flow set at .75 GPM

(2) Passes through internal breakdown bushings to controlled seal leakoff line from #2 seal cavity

(3) All seal leakage routed to Drywell equipment drain sump.

4) Seal Failure

a) Failure of the #1 seal assembly would allow increased flow to the #2 seal cavity, forcing the #2 seal to operate at a higher ΔP i.e.: >500 PSID.

Failure of the #1 seal will cause increased leakage ~1.1 GPM through the controlled seal leakoff line

(1) Alarms high at .9 GPM

(2) Alarms low at .25 GPM

b) Failure of the #2 seal would cause an increased leakage through the seal leak detection line downstream from the #2 seal

(1) This condition alarms at .25 GPM. Normally there is zero flow

c) Failure of both mechanical seals would result in a total leakage from the seal assembly of 60 GPM (maximum)

(1) The breakdown bushings limit the above total leakage

d) Plugging the #1 R.O. would result in a reduction in #2 seal pressure and FS "A" alarming low

e) Plugging the #2 R.O. would result in #2 seal pressure and FS "A" alarming low.

4) Seal Cooling (Fig. 6)

a) Due to the heat generated by the friction of the sealing surfaces and the leakage of reactor water through the seal assembly, cooling is required.

b) Cooling supplied by RBCCW system (~7 GPM required)

c) Heat exchanger provided which surrounds the seal assembly

d) Primary water is routed via:

(1) Hole in main pump impeller

(2) Hydrostatic bearing

(3) Post shaft-to-casing clearance

e) Primary water circulated through heat exchanger tube side to seal cartridge via:

(1) Auxiliary impeller mounted on main pump shaft just below the seal assemblies

f) If RBCCW is lost to the pump and motor, the pump should be tripped in ~1 minute to prevent bearing and/or seal damage

5. Recirculation System MG Sets (Fig. 7)

a. The recirculation pumps are driven by MG Sets, located in the turbine building on the turbine floor. The MG Set drive motor and generator are connected by a fluid coupler which controls the speed of the generator and thus the pump motor.

b. Drive Motor

1) 9000 HP - 6 pole - 1200 RPM Induction Motor

2) Maximum Current - 1125 Amps at 60.0 HZ (Gen. @ 57.5 HZ)

3) Rated voltage - 4160V AC

4) Maximum Winding Temperature - 248°F

c. Generator

1) Variable Frequency Generator (6 pole, 224-1150 RPM @ 11.5 to 57.5 HZ)

2) Power Rating - 5985 KW at 56 HZ

3) Power Factor - 0.9 @ 56 HZ

4) Rated Voltage - 3920V AC @ 56 HZ : 4025 V AC at 57.5 HZ

5) Maximum Current 979 Amps

6) Maximum Winding Temperature 248°F

d. Voltage Regulator and Excitation

1) Normal Operation

a) The generator is excited by an AC exciter whose output is converted to DC via rotor mounted diodes and applied to the field via slip rings. The exciter is driven by the the MG drive motor

2) Initial Startup

a) Excitation is supplied from the 120V AC, 60 HZ Essential service bus.

3) Transfer to self excitation is time delayed following closure of the generator field breaker

4) The voltage regulation is supplied by a volts/HZ type regulator which decreases the output voltage by 70V/HZ as as the frequency is decreased.

5) Decreasing the frequency of the applied voltage on an AC induction motor lowers the power factor. Maintaining a constant voltage would require excessive amounts of excitation current which could cause overheating of the exciter and/or voltage regulator.

6) Thus the need to program the output voltage down with decreasing frequency.

7) The output of the generator is hard wired directly to the recirc pump motor.

a) The inertia of the rotating elements in the generator supplements the inertia of the recirc pump and motor to provide a coastdown of action or flywheel effect upon loss of station power.

b) The full flywheel effect depends on two factors

(1) Adequate generator excitation

(2) Dependable fluid drive scoop tube control

c) At least 10 seconds coastdown time is provided on a trip from 60% speed or greater.

(1) The coastdown maintains recirc flow and helps protect the fuel from excessive temperatures following a loss of power

e. Fluid Coupler (Fig. 7)

1) Operation

a) Four basic elements make up the fluid drive unit.

(1) Input (driving) shaft

(2) Output (driven) shaft

(3) Casings

(4) A means of varying fluid level

b) The input shaft, impeller, impeller, impeller casing, inner casing and outer casing all rotate together at drive motor speed

c) The runner and output shaft rotate together at a speed governed by the quantity of oil in the vortex and the load conditions

d) The input and output rotating assemblies are supported on their respective sleeve bearings mounted in pillow blocks

e) Hydraulic thrust is absorbed by Kingsbury thrust bearings included in above pillow blocks

f) There is no mechanical connection between the input and output members

g) Steady state operation

(1) The impeller, which is directly connected to the prime mover, imparts its energy to the oil

(2) The oil, flowing in its vortex (whirlpool) pattern, transmits its energy to the runner to drive the load

(3) When the working circuit of the impeller and runner is filled with oil, the drive is capable of transmitting maximum power with the least slip or differential speed between the impeller and runner

(4) By introducing a movable scoop tube into the casings, the amount of oil in the casings can be adjusted from full to empty

(5) Reaction to adjustment is fast and smooth over a wide speed range.

h) Transient operation

(1) Oil enters the working oil circuit through ports in the inboard end of the impeller pillow block

(2) There is always a fixed quantity of oil entering the working circuit due to positive displacement oil pumps and orificing

(3) The oil is acted upon by the impeller and centrifugal force, forming a vortex pattern and transmitting its force to the runner

(4) The speed control scoop tube position controls the quantity of oil in the working circuit

(5) The momentum of the rotating oil forces some of the oil out of the stationary scoop tube and into the oil reservoir. (Fig. 9)

(6) Insertion of the scoop tube into the vortex removes oil faster than it is being supplied, reducing the quantity of oil in the working circuit

(7) This reduction of oil results in less coupling and a lower generator speed

(8) If the scoop tube is now stopped, the rate of removal will equalize with the rate of supply and the quantity of oil in the working circuit stabilizes at some new, lesser amount

(9) With scoop tube fully inserted -min. coupling
With scoop tube fully retracted- max. coupling

2) Oil Supply System (Fig. 10)

a) In addition to the working circuit, the oil supply system must provide:

(1) Cooling

(2) Lubricating

b) Three half capacity, positive displacement 60 HP AC oil pumps rated at 614 GPM and one HPM DC emergency oil pump rated at 156 PM take suction from the fluid coupler reservoir.

c) A relief valve at the discharge of the pump controls the discharge pressure by relieving back to the suction of the pump

(1) This maintains a constant pumping rate and allows a fixed quantity of oil to enter the working circuit

d) The oil travels to an oil cooler. The cooled oil is returned to the fluid drive where a portion is passed through filters for lubrication of fluid drive motor and generator bearings

e) If one of the oil pumps fails, the following sequence occurs:

(1) Time 0 - oil pressure drops to <30 psig

(a) The standby A/C oil pumps auto starts

(2) Time + 6 secs. - if oil pressure still 30 psig,

(a) auto. trips AC oil pumps (if DC pump lined up to start)

(b) auto. trips of M/G drive motor

(3) If pressure drops to 20± psig (or redundant 10 psig), the DC oil pump auto. starts (after 6 sec T.D.)

(a) The D. C. pump will provide fluid coupler bearing oil pressure only for coastdown purposes following loss of the AC pumps.

7. Jet Pumps

a. Function

1) Provide maximum core flow with minimum external flow

2) Provide 2/3 core height "standpipe" effect following a design break accident (Fig. 11)

a) Steam formed in the lower 2/3 of the core will flow upward, cooling the top portion of the core

3) See RPV and RPV internals lesson plan for details of construction

b. Like centrifugal pumps, a jet pump converts velocity head into a pressure head. (Fig. 12)

1) Due to the convergent section of the driving flow nozzle, the driving flow is accelerated to a high velocity.

2) This in turn creates a low pressure in the throat area. Due to this pressure differential, the driven flow is accelerated and entrained with the driving flow stream

3) In the diffuser section, a further reduction in velocity is achieved and the resultant discharge pressure is developed

c. The performance of jet pumps is generally shown to be a function of the parameters defined below.

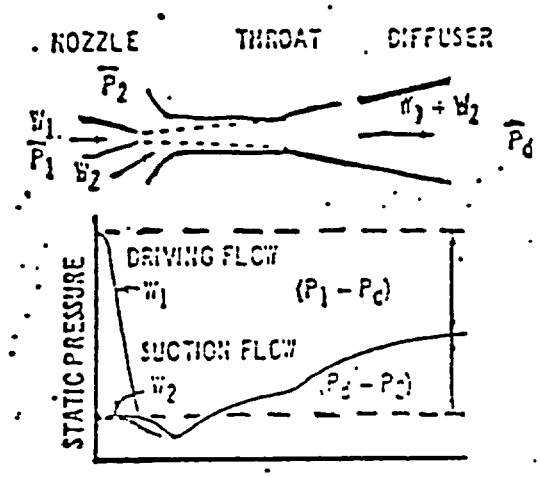

1) Flow Ratio. M=the ratio of the driven mass flow (suction flow) to the driving mass flow through the nozzle

$$M = \frac{\text{Driven}}{\text{Driving}} = \frac{W_2}{W_1} \cong \frac{68 \times 10^6 \text{ \#/Hr.}}{34 \times 10^6 \text{ \#/Hr}} = \frac{2}{1}$$

3. Jet Pump Header (Fig. 2)

a. Each recirculation loop discharge line terminates in a 22" manifold or "ring header" which encompasses the reactor vessel

b. Flow from each recirc pump is routed from the manifold to 5 - 12" jet pump risers. Each riser supplies driving flow to 2 jet pumps

c. The "ring header" is split by two valves

1) Installed to allow operation of all 20 jet pumps from one recirc pump

a) Designed to minimize flux tilting which may result from single loop operation

2) Startup test results indicate operating pump may go into runout when the crosstie valves are opened due to doubling the flow area

a) This reduces the pump discharge pressure which supplies the hydraulic force to the hydrostatic bearing

(1) Internal pump damage may be the end result

b) Therefore, operating procedures prevent opening the crosstie valves and only allow one crosstie bypass valve to be open to prevent overpressure

NOTE: The flux tilt was found to be minor in nature (3-5 %)

d. The crosstie valves each have an equalizer valve

1) They prevent a pressure buildup between the two crosstie valves

2) Pressure in a solid system will increase ~100# per °F increase

9. MG Set Ventilation System

a. Two 100% capacity ventilation axial fans supply cooling air to both MG set drive motors and generators

b. There are no interlocks to prevent starting the MG set drive motor without vent fans. However, procedures require that at least one fan be operating whenever an MG set is running

c. After taking an MG set off the line, the vent fan should also be stopped to prevent accumulation of moisture in the MG set

F. INSTRUMENTATION

1. Control Room

a. 902-4 panel

Instrument	Type	Range
Recirc loop temperatures	Recorder	0 - 600°F
Recirc pump loop flows	Indicators	0 - 70 x 10^3GPM
	Recorder	0 - 70 x 10^3GPM
Loop flows	Indicators	0 - 80 x 10^6#/hr
Jet pumps 1,6,11,16 flows	Indicators	0 - 8 x 10^6#/hr
Recirc pump & MG set temp.	Multipoint Recorder	0 - 600°F
Recirc drive motor & generator Status temps.	Multipoint Recorder	0 - 300°F
Recirc pump differential pressure	Indicator	0 - 300 psid
Recirc pump power		
1) generator current	Indicator	0 - 1500 Amps
2) generator power	Indicator	0 - 8000 KW
3) generator voltage	Indicator	0 - 5.25 KV
Recirc MG drive motor current	Indicator	0 - 1500 Amps
Pump seal pressures	Indicator	
1) #1	Indicator	0 - 1500#
2) #2	Indicator	0 - 1500#
Jet pump flows (individual)	Indicator	0 - 30 psid
Recirc pump motor speed	Indicator	100 - 2500 rpm
Recirc MG set generator speed	Indicator	20-100%

b. 902-5 panel

Instrument	Type	Range
Total core flow	Recorder	0 - 125 x 10^6#/hr
Core pressure drop	Recorder	0 - 50 psid

c. 902-21 (back panel

Instrument	Type	Range
Vessel bottom head Drain temp.	Multipoint Recorder	0 - 600°F

2. Local

a. Reactor building

Instrument	Type	Range
Recirc pump seal pressures	gages	0 - 1500 #

3. Significant Interlocks, Trips and Alarms

Item	Set Point	Function
Recirc pump low ΔP	>4 psid	Allows start signal to be applied to M/G set
Feedwater flow interlock	>20%	Provides adequate sub cooling for recirc pump speeds up to 100%. Recirc pump speed cannot be increased above minimum until interlock is cleared. Cavitation may damage impeller
Recirc pump runback/speed limiter	Any feed pump <20% rated flow and vessel level >low level alarm (+27")	Recirculation pump speed is runback or limited to 75% so that the feed-water control system will be able to maintain or recover reactor water level upon loss of a reactor feed pump.
Recirc discharge valve not full open interlock	Valve <90% open	Prevents increasing recirc pump speed above minimum unless valve is open. Possible pump internal damage.
Recirc suct. valve not full open	[illegible]	Protects pump. Recirc pump will not start or will trip if running.

Item	Set Point	Function
Recirc pump trip	-51.5" reactor water level	Low water level NPSH for recirc pumps. Possible cavitation problems
M/G oil pump auto start	<30 psig w/1 sec. T.D.	Allows time for running oil pump to restore pressure. At the end of 1 sec., auto starts standby oil pump
	<30 psig & 6 sec. T.D.	After 6 secs., if oil pressure is still <30#, trips the recirc M/G set, and AC oil pumps (if DC pump lined up to start)
	<20# or <10# 6 sec. T.D.	Starts DC oil pump
Control seal low flow	.25 GPM	Detect seal failure
Control seal high flow	.90 GPM	Detect seal failure
#2 seal leak	.25 GPM	Detect seal failure

G. SYSTEM OPERATIONAL SUMMARY

1. Normal Operation

a. Minimum Speed Operation

1) The limiting minimum recirculation pump speed has been established so that, with only one pump running, a sufficient flow will be produced to minimize reactor vessel bottom head temperature gradients.

a) Potentially high differential temperature can exist in the vessel bottom head region due to the CRD cooling water, injected at 70 - 90°F

b) It is desired to keep the ΔT between the saturation temperature and the water from the vessel bottom head drain drain to the cleanup system at a value <145°F and the between an idle and an operating recirculation loop at a value <50°F

2) To accomplish the above:

a) The minimum recirc pump speed is procedurally limited to 28% even though the fluid coupler could operate down to 20%

b) The vessel bottom drain line was connected to the cleanup system for accurate temperature indication in the bottom head region.

(1) Drain valve has a drilled disc to allow flow at all times and prevent stagnation

3) A ΔT between saturation temperature and the bottom head temperature is not limiting in itself. The stresses occur when starting an idle pump or increasing flow. Hot water now sweeps out the cold, producing an uncontrolled heatup.

a) Regions of primary concern are:

(1) CRD housing to stub tube welds

(2) RPV to RPV skirt welds

b) In addition, the cold water is swept up and through the core, producing a reactivity transient

b. Maximum Speed Operation

1) The recirculation pumps are sized and designed for pumping reactor water at rated conditions, i.e.: 546°F

2) Rated core mass flow 102.5 x 10^6 lb/hr, can be achieved at lower temperatures. However, current limits on the MG set drive to motor and/or generator will be encountered at approximately 50 °F if pumping cold water

3) By design the recirculation system is rated at 56.0 HZ. However, the limiting speed is 57.5 HZ with the generator the limiting component

4) 100% core flow is normally achieved at approximately 90% pump speed

c. Pump NPSH Requirements

1) NPSH is defined as a measure of the difference between the static pressure and the saturation pressure at the pump inlet

2) The static pressure is comprised of two effects

(a) The height of the column of water above the pump

(b) The amount of subcooling at the eye of the pump

3) The recirc pumps are located approximately 60 feet below normal reactor operating level. This provides adequate NPSH during low power saturated operation

4) Feedwater flow provides the subcooling to the recirc pump suction when operating at higher power levels, ~20°F @ 100% power condition

5) An interlock prevents increasing recirc pump speed above the minimum value (28%) unless at least 20% F.W. flow is present for subcooling

6) At full power, NPSH is ~540 feet

d. Single Loop Operation

1) Single loop operation is allowed, but the operator must ensure that the recirc loop flow for the loop with the running pump ≤100% by reducing operating pump speed

2) Additionally, the operator must ensure that operating pump Amps, motor winding temperature, bearing temperatures, and motor vibration are all within allowable limits

3) When a running pump trips, the discharge valve for that loop should be closed for 5 minutes

a) Allows the tripped pump to come to rest. After 5 minutes open the discharge valve as necessary to maintain loop temperature

e. Starting an idle pump loop

1) If the pump has been isolated and >50°F below reactor temperature, open the suction valve, establish seal water supply, and throttle the discharge valve sufficiently to establish a heat up rate ≤100°F/hr

2) When the idle loop temperature is within 50°F of reactor temperature and when vessel bottom head temperature is within 145°F of reactor (saturation) temperature, shut the idle pump discharge valve

3) Establish fluid drive oil temperature ≥90°F with cooling water established to oil coolers

4) Ensure the operating pump ≤50% speed

5) Start the idle pump at minimum speed

NOTES: (1) Do not start an idle recirc pump when APRM's are at the rod block. Insert control rods as required to provide 5-8% power margin between APRM power and APRM rod block

(2) The 50° ΔT limit between the idle loop temperature and reactor temperature prevents a large uncontrolled thermal stress on the pump casing. Small internal components heat up and expand faster than the casing and pump drainage might otherwise occur. Additionally it limits the cold water reactivity addition effect

(3) The 145°F ΔT limit between vessel bottom head temperature and reactor temperature is based on limiting thermal stress on CRD housing to stub tube welds and thermal stress on reactor vessel to support skirt welds. If the 145° ΔT limit is exceeded, the reactor saturation temperature must be lowered to reduce the ΔT.

(4) Restart limitations must be observed.

(5) Once the just started pump ΔP increases >5 psid, its discharge valve will start to open by an automatic jogging circuit which will get the valve open within 55 seconds maximum.

2. Abnormal operation

a. Operation with pumps at different speeds (Fig. 13)

1) Operating instructions limit pump speed mismatch during normal operations as follows:

Power Level	Speed Mismatch
<80	≤35%
>80%	≤22%

a) Large mismatches could cause flow-induced vibration of the lower speed jet pump risers (Region I of figure 13)

(1) The vibration results from turbulence generated by the sheer forces between the driving flow stream and the reversed secondary flow (Fig. 14). Excessive vibration could cause fatigue failure of the jet pump riser braces.

2) Region 2 of Fig. 13 is prohibited because of instability in fluid coupler

3) Region 3 of Fig. 13 is a transient region. Operation is allowed during pump restart only

b. Recirculation pump seal failure

1) If only one seal fails, operation of the pump may continue until a planned shutdown

2) If the other seal leakage becomes excessive, shut the pump down and isolate it

3) Check drywell atmosphere conditions and leakage rate to verify pump isolation

c. Isolated loop

1) When changing temperature in an isolated loop, the cooldown rate (or heatup rate) should be controlled to 100°F/hr. This is a primary system limitation. The most limiting component in the recirculation system is the recirc pump casing

d. Shutdown cooling mode of RHR

1) BFNP operating instructions call for securing the recirculation pump prior to starting RHR pumps to intiate shutdown cooling on that loop

2) There will be thermal stresses on the RHR line which ties into the recirculation pump discharge line and on the inlet riser nozzle penetrations to the jet pumps

NOTE: See Dresden Lesson Plan on Recirculation System for a discussion of the condition where recirculation pumps are left running while shutdown cooling is in effect.

H. RELATIONSHIPS WITH OTHER SYSTEMS (Fig. 2)

1. Recirc loop "A" provides a suction path and both loops provide a discharge path for the residual heat removal system

2. Recirc loops A & B flow elements serve as inputs to the APRM and RBM flow biased circuits

3. RBCCW cools recirculation pump seals and recirculation pump motor oil

4. CRD hydraulic system provides seal purging water to the number one seal cavity

5. The reactor water cleanup system takes suction from the RHR suction pipe emanating in the "A' recirculation loop

6. The primary system can be sampled from the "A" recirc loop

I. TECHNICAL SPECIFICATIONS

1. Jet pumps

a. Whenever there is recirculation flow with the reactor in the startup or run modes with both recirculation pumps running, jet pump operability shall be checked daily by verifying that the following two conditions do not occur simultaneously:

1) When the two recirculation loops have a flow imbalance of ±10% when the pumps are operated at the same speed

2) The indicated value of core flow rate varies from the value derived from loop flow measurements by more than 10%

3) The diffuser to lower plenum differential pressure reading on an individual jet pump varies from the mean of all jet pump differential pressures by more than 10%

b. Additionally, when operating with one recirculation pump with the equalizer valves closed, the diffuser to lower plenum differential pressure shall be checked daily, and the differential pressure of an individual jet pump in a loop shall not vary from the mean of all jet pump differential pressures in that loop by more than 10%

c. The operator would check 1) above by comparing recirc pump speed vs. recirc pump flow. For example, 90% pump speed normally corresponds to 100% flow in each pump. If one pump indicated 130% flow, it could indicate a possible failed jet pump in that loop

d. Since the core thermal power-core flow relationship has been determined very accurately, the operator can derive core flow by finding the thermal power and, using the power to flow map, find the expected core flow. Comparing this value to the total core flow allows him to check 2) above

e. Both 1) and 3) or 2) and 3) occurring simultaneously is indicative of a failed jet pump riser or nozzle

f. Concern for jet pump operability is not for total vessel flow but rather for ECCS considerations

1) Riser failure would expose a larger maximum flow area for the maximum credible accident

2) Low pressure ECCS systems would of necessity have to be of larger capacity to accommodate the increased blowdown rate and consequent more rapid uncovering of the core

2. Recirculation Pump Flow Mismatch

a. Whenever both recirculation pumps are in steady state operation, pump speeds shall be maintained within 22% of each other when power level is greater than 80% and within 35% of each other when power level is less than 80%

b. If mismatch limit cannot be met, one recirculation pump shall be tripped

c. The reactor shall not be operated with one recirculation loop out of service for more than 24 hours

d. Following one pump operation, the discharge valve of the idle pump may not be opened unless the operating pump speed $\leq$50%

NOTE: Although the technical specification for flow mismatch was was originally provided for LPCI loop selection criteria, it still applies for jet pump vibration criteria criteria

3. Temperature limitations

a. The pump in an idle recirc loop shall not be started unless the temperatures of the coolant within the idle loop and operating loop are within 50°F of each other.

b. The recirc pumps shall not be started unless coolant saturation temperature and vessel bottom head drain temperature are within 145°F.

Revision _____

Date _____

BWR SYSTEMS

LESSON PLAN

A. MAIN STEAM SYSTEM

B. REFERENCES

1. BWR Systems Manual Chapter 2.6
2. Brown's Ferry Nuclear Plant. FSAR Section 4.4, 4.5, 4.6, 4.11
3. Brown's Ferry Nuclear Plant Technical Specifications
4. Flow Diagrams 47W801-1
   Mechanical Control Diagram 47W610-1
   Mechanical Logic Diagram 47W611-1
5. Reference Card File 2.6

C. OBJECTIVES

1. Fullyunderstand the purpose of the system and its design basis
2. Major system components and flow paths
3. Significant system instrumentation and interlocks
4. Relationships between Main Steam System and other systems
5. Technical Specifications governing the system

D. GENERAL DESCRIPTION

1. Design Basis

   a. To conduct steam from the reactor vessel through the containment to the turbine - generator.

   b. To prevent uncontrolled release of primary steam to the environs.

   c. To assist in limiting pressure in the nuclear steam generation system.

   d. To provide steam to various in-plant components.

e. To provide Steam to HPCI and RCIC

2. Components (Figure 1)

a. Steam lines

b. Safety valves

c. Safety/relief valve

d. Flow restrictor

e. Main steam isolation valves (MSIV's)

f. Main steam line, HPCI steam line, and RCIC steam line drains and drain valves

g. Pressure equalizing header

h. Bypass valves (covered in Turbine Lesson Plan)

i. Turbine stop valves (covered in Turbine Lesson plan)

j. Turbine control valves (covered in Turbine Lesson Plan)

3. Flow Paths

a. Main Steam lines

1) 4 lines
2) Rates steam flow is 3.34×10^6 #/hr./line

b. Reactor head vent

c. Safety valves

d. Safety/Relief Valves

e. Steam line to HPCI turbine

f. Steam line to RCIC turbine

g. Steam line drains

1) Above seat
2) Below seat

h. HPCI and RCIC drains

i. Pressure equalizing header

j. Steam to turbine

k. Bypass steam to condenser

l. Balance of plant steam requirements

1) Off-Gas system (RECHAR)
   a) SJAE Supply.(1st and 2nd Stage
   b) SJAE Supply (3rd Stage)
   c) Off-gas pre-heater

2) Turbine driven reactor feedwater pumps

3) Gland sealing steam

E. COMPONENT DESCRIPTION

1. Steam Lines

a. Design Basis

1) To conduct steam from the reactor vessel through the primary containment to the steam turbine

2) To accommodate operational stresses, such as internal pressures. without a failure which could lead to a release of radioactivity in excess of the guideline values in 10 CFR 100.

3) The main steam lines within the primary containment are to withstand the effects of an earthquake without a failure which could lead to a release of radioactivity in excess of the guideline values in 10 CFR 100.

4) Portions of the main steam lines are designated Seismic Category I and should be designed to withstand the effects of the safe shutdown Earthquake (SSE).

   a) From the outermost containment isolation valve up to but not including, the turbine stop valves
   b) Inter-connected piping 2-1/2 inches or larger up to and including the first valve that is either normally closed or capable of automatic closure during all modes of normal reactor operation.

b. Four 26" carbon steel steam lines used to:

1) Permit turbine stop valve and main steam isolation valve testing during plant operation with a minimum amount of load reduction.

2) Limit differential pressure on reactor internals under assumed accident conditions including a reptured steam line

3) Limit inventory loss on steam line break.

4) Permit high power operation with one line isolated.

5) Permit utilization of bypass valves (common header)

2. Reactor Head Vent

a. Operating vent

1) From reactor head to "c" main steam line. Continuous vent of non-condensibles which might otherwise accumulate in the head area during power operation.

a) Flow caused by small pressure drop between the vessel and the steam line.

b. Cooldown vent

1) From reactor head to D/W equipment drain sump. Vents non-condensibles during cooldown after main steam lines have been flooded and the reactor depressurized.

3. Safety Valves

a. Design basis

1) The safety valves are designed to prevent overpressurizing the nuclear steam supply system to prevent failure of the nuclear system process barrier due to pressure.

a) Design pressure is 1250 psig (vessel safety limit).

b) ASME code allows a transient overpressure

condition of 10%
(1) 1250 + 10% (1250) = 1250 + 125 = 1375 psig

c) The highest pressure in the primary system will be at the lowest elevation due to system pressure + the static water head. The highest pressure point will occur at the bottom of the vessel. Because the pressure is not monitored at this point; it cannot be directly determined if this safety limit has been violated. Also, because of the potentially varying head level and flow pressure drops, an equivalent pressure cannot be a prior; determined for a pressure monitor higher in the vessel.

2. The total safety and safety/relief valve capacity has been established to meet the overpressure protection criteria of the ASME code.

   a) The worst overpressure transient
      1) 3-second closure of all MSIV's neglecting the direct scram (valve position scram)
      2) Maximum vessel pressure of 1303 psig if a pressure scram is assumed
      3) Maximum vessel pressure of 1260 psig if a neutron flux scram is assumed
      4) Number of installed valves that must open to limit peak pressure to 1350 psig (25 psig margin)
         (a) 7 valves must open if a neutron flux scram is assumed
         (b) 10 valves must open if a pressure scram is assumed

3. The distribution of the required capacity between safety valves and safety/relief valves must be such that the safety/relief valves shall prevent the opening of the safety valves during pressure transients which are responsibly expected during the lifetime of the plant

   1) A turbine trip from rated power with bypass valve failure to open (assuming turbine trip scram) is the most severe abnormal operational transient resulting directly in a reactor coolant system pressure increase.

b) High pressure switch activates a DC solenoid which admits air pressure to a remote operator.

3) Auto Depressurization

a) To provide automatic depressurization for small breaks in the nuclear system so that the LPCI made of RHR and the core spray system can operate to protect the fuel barrier

b) Opening action is the same as for the relief function

c) 6 Safety/Relief valves operate in the ADS mode.

c. Valve Set points

1) 4 valves @ 1080 psig Capacity 800,000 lb/hr each
2) 4 valves @ 1090 psig Capacity 808,000 lb/hr. each
3) 3 valves @ 1100 psig Capacity 815,000 lb/hr each

d. Blowdown path

1) Individually piped to the suppression pool below the minimum water level

2) Vacuum breaker provided to allow entry of dry well air into the relief line to prevent water from the suppression pool, from being "pulled" up, into the relief line upon completion of blowdown when the steam in the relief line condenses. Subsequent reopening of the valve with its relief line partially filled with water could overpressurize the relief line.

e. Valve Actuation

1) Self actuation (safety mode) (Figure 5)
a) Pressure senses at pilot sensing part (2)
b) Bellows (6) is forced to the right if setpoint is reached.
c) Moring pilot valve disc (3)
d) Allowing pressure to be transferred to the second stage piston (8) which is forced down.
e) This vents the pressure from the top of the main valve piston (12).
f) Venting is via second stage disc (10) and out main valve piston vent (15).
g) This unequalizes pressure across main valve piston (12).

h) Pressure differential is created because of the small size of the main valve piston orifice (13) compared to the main valve piston vent (15).

i) Reactor steam pressure then lifts the main valve piston (12) and the main valve disc (14).

j) Steam flows out and is piped to the suppression pool.

k) When steam pressure is $\approx$50 psig below set point, the pilot setpoint adjust spring (4) forces the pilot valve closed (3).

l) Second stage disc closes (10).

m) Pressure equalizes across main valve piston (12).

n) Spring force closes main valve disc (14).

o) If the bellows ruptures, a pressure switch alarms at 150# (5).

2) Pilot actuation (Manual)

a) DC solenoid admits air pressure to remote air actuator (7).

b) This pushes down on second stage piston (8),

c) Which unequalizes pressure across main valve piston (12) as above.

d) The solenoid is actuated by:

(1) high pressure - set pressure (Not applicable to Brown's Ferry)

(2) manual demand

(3) automatic blowdown demand.

e) The pressure sensing device is a bourdon tube. If reactor pressure reaches the set pressure, it activates a switch to energize the solenoid.

f) Each of the 6 Safety/Relief valves provided for ADS is equipped with an air accumulator and check valve arrangement. These accumulators are provided to assure that the valves can be held open. Following failure of the air supply to the accumulators and they are sized to contain sufficient air for a minimum of five valve operations or holding the valve open for 30 minutes. Accumulators are not required for the relief valves not used for ADS

5. Steam Line Flow Restrictors

   a. Purpose

      1) Limit flow during steam line rupture to ≤200% of rated line flow.

      2) Limit the loss of coolant from the Reactor vessel following a steam line rupture outside the primary containment to the extent the vessel level does not fall below the top of the core within the MSIV closure time.

      3) Limit the ΔP across core internals by restricting flow.

      4) Provides mechanism for measuring steam flow.

         a) indication
         b) input to reactor level control system.

      5) Provides input to the primary containment isolation system.

   b. Venturi-type restrictor. Pressure drop of ≈10 psi across the restrictor at full flow.

6. Main Steam Isolation Valves

   a. Each steam line has two isolation valves - one inside and one outside the primary containment.

   b. Purpose

      1) Prevent exceeding radiation release rates in excess of 10CFR100 guidelines in the event of a steam line break outside of primary containment.

      2) Limits inventory loss during a steam line break accident. Helps maintain clad integrity by preventing core from uncovering.

   c. Valve description

      1) Major components

         a) air cylinder
         b) hydraulic dashpot
         c) speed control valve
         d) closing springs
         e) valve seat
         f) pilot and pilot valve seat

2) Open valve operation

a) Air supplied to underside of air operator piston causes piston and stem to move upward against spring pressure.

b) Stem lifts pilot valve first - 1/2 inch

(1) equalizes upstream and downstream pressures through balancing orifice

c) Upper portion of pilot makes contact with main valve body, and lifts the main valve off its seat to a full open position.

d) Valve designed to open against 200 psid differential (100 psid differential by procedure)

3) Close valve operation

a) Air supplied to top of air operator piston plus spring force causes valve to close.

b) Valve closure speed set by throttle valve on hydraulic dashpot.

(1) Valve closes in 3 - 5 seconds.
(a) Fast enough (5 seconds) to prevent gross release of fission products to the environs.
(b) Slow enough (3 seconds) to minimize the severity of the pressure transient resulting from isolation.

4) Characteristics

a) Air to open.

b) Air and/or spring to close.

c) Valve fails closed on loss of air.

d) One AC and one DC solenoid operated valve controls air supply.

e) Each valve has an accumulator - check valve arrangement to supply air on loss of pneumatic supply pressure.

f) Inboard valves supplied by drywell, the drywell control air system. Outboard valves supplied by the control air system.

5) Air system open valve operation

a) Air is supplied to air operating cylinder through an air-operated control valve.

b) The air-operated control valves are controlled by the AC or DC solenoid operated valve.

(1) If either solenoid valve is energized, the control valves will be positioned to:

(a) supply air to underside of air operated piston.
(b) bleed off air from the top of the piston.

(2) Working against spring force, air opens valve.

(3) 250 V DC supplied by battery.

(4) 120 V AC supplied by an RPS bus.

6) Air system close valve operation

a) De-energizing both solenoid valves will cut-off air supply to the control valve operators causing the control valves to:

(1) supply air to top of air operator piston.

(2) bleed off air from underside of piston.

(3) Air pressure and spring force close the isolation valve.

7) Test operation

a) Depressing the test pushbotton for 1A Main Steam Isolation Valve causes:

(1) The test solonoid valve to energize resulting in air being supplied to the test control valve operator.

(2) The test control valve positions to stop the air supply to the underside of the MSIV air operator piston and slowly bleed the remaining air through a needle valve.

(3) The valve slowly closes under spring pressure.

(4) The valve will go to the full closed position if the test pushbutton is held depressed

(5) When the test push button is released, the test solenoid valve de-energized and air is again supplied to the underside of the MSIV air operator piston to open the valve

(b) If the test pushbutton is held down, the valve will close in 45 - 60 seconds.

(c) Testing a valve at full power might result in high steam flow in the other three lines. It is therefore necessary to reduce reactor power to ≤ 70% of rates power prior to testing.

8) MSIV Control Logic (for MSIV 203 -1A) - Does not Apply to Brown's Ferry

a) Normal operation (valve open)

(1) GRI osolation contacts closed.

(2) IIIA & 112A relays energized and sealed in.

(3) Control relay CRIA de-energized.

(4) Control switch in auto-open position (contacts closed).

(5) 120V AC & 125V DC solenoids energized.

(6) Air supplied to air operator to open MSIV.

b) Close operation

(1) Control switch contacts open.

(2) De-energized 120V AC & 125V DC solenoids.

(3) Air supplied to air operator to close MSIV.

c) Test operation

(1) If the MSIV is full open, momentarily depressing test pushbutton energizes CRLA and the test valve solenoid.

(2) CR1A provides the following functions:

(a) seals itself and the test valve solenoid through LSIA.
(b) de-energizes 120V AC solenoid.
(c) de-energizes 125V DC solenoid.

(3) When the MSIV reaches the 90% open position, LSIA opens.

(a) This de-energizes CR1A and the circuit returns to a normal configuration with the MSIV open.

(4) Holding the test pushbutton down continuously acts as a bypass of LSIA and the MSIV will slowly close.

d) GR I Isolation

(1) Arranged in a one-out-of-two twice logic, the 106 acontacts open on Group I isolation and cause:

(a) 112A & 111A relays to de-energize, sealing in isolation.

(b) 120V AC and 125V DC solenoids to de-energize.

(c) Test valve solenoid to de-energize (if energized)

(d) Air supplied to operator to close valve (along with spring pressure in 3 - 5 seconds.

(e) To reset after GR I isolation has cleared, turn the main steam isolation reset switch to energize both inboard and outboard valves.

(f) 108A contact closes and picks up the 112A relay, and allows the 120V AC & 125V DC solenoids to pick up, opening the MSIV.

g) Signals which cause automatic closure of MSIV's are:

a) Low-low reactor water level (490") (Tech Spec 490")

b) Main steam line high radiation (3 x normal 100% radiation level)

c. Steam tunnel high temperature (194°F) (Tech. Spec. 200°F)

d) High steam flow in any main steam line (140%) (Tech Spec 140%).

e) Low pressure equalizing header pressure (825 psig)

(1) bypassed in all modes except run.

f) Manual

10) Reasons for isolation signals:

a) 490" reactor water level

(1) Low enough to prevent spurious initiation.

(2) High enough to initiate isolation (and ECCS) so that:

(a) no melting of the fuel cladding occurs.
(b) post accident cooling may be accomplished and the guidelines are not violated.

Note: 10CFR100 guidelines define an exclusion area so that any individual on the site boundary for 2 hours immediately following the onset of fission product release would not receive a total radiation dose of greater than 25 Rem whole body or 300 Rem to the thyroid.

b) 3 x normal high radiation

(1) detect gross fuel failures

(2) prevent exceeding 10CFR100 guidelines

c) 200°F steam tunnel high temperature

(1) detect small (15 gpm) steam leaks in steam tunnel.

(2) provide backup to high steam flow isolation on large breaks outside containment.

(3) prevent exceeding 10 CFR100 guidelines.

d) 140% steam flow

(1) In conjunction with the flow restrictors and main steam isolation valve closures, limits the mass inventory loss such that:

(a) fuel is not uncovered.
(b) fuel temperatures remain less than 1000°F
(c). 10CFR100 guidelines are not exceeded.

e) ≠ steam line pressure with mode switch in Run

(1) protects against a failure of a pressure regulator which would cause the control and/or bypass valves to open.

(a) limits inventory loss so fuel is not uncovered
(b) peak clad temperatures are much less than 1500°F.
(c) There will be no fission products available for release other than those in the reactor coolant, therefore 10 CFR100 guidelines will not be exceeded.

(2) Prevents rapid depressurization and subsequent cool down of the reactor vessel at rates exceeding the design rate of change at vessel temperature.

7. Steam Line Drains

a. A drain line is provided at the low point of each main steam line as follows:

1) upstream of the inboard isolation valves.

2) downstream of the outboard isolation valves.

b. Line Draining

1) A combined MO valves (55 valve) is provided for the above seat drain lines for rapid draining of the steam lines if flooded.

2) Drains go to the main condenser.

3) When plant is operating, drain path is through orifices to the condenser.

4) Each downstream drain line has an isolation valve so that if an individual line has to be isolated at power, its drain valve can be opened.

a) Prevents the isolated line from filling up with condensate which could damage the turbine when the line was unisolated.

c. Drain valves also have equalizing function.

1) Recovery from main steam isolation

a) check common drain line to condenser closed (58 valve)

b) open outboard isolation valves.

c) open drain valve #57

d) open drain valve #56

e) open drain valve #55 to pressurize the main steam piping and equalize around the inboard isolation valves.

f) open inboard isolation valves when pressures equalize (within 100 psid).

g) open drain valve #58

Note: Turbine drain lines will be covered in turbine lesson plan.
Note: HPCI, RCIC drain lines will be covered in their respective lesson plans.

8. HPCI Steam Line

a. 10" line off the "B" main steam line
b. Supplies steam to the HPCI turbine

9. RCIC Steam Line

a. 3" line off the "C" main steam line

b. Supplies steam to the RCIC turbine

10. Pressure Equalizing Header

a. Smaller pressure transients experienced when testing MSIV's and turbine stop and control valves.

11. Bypass valves

a. 9 valves with 25% relief capacity (total)

1) Discharge into the main condenser via pressure reducing orifices.

12. Balance of Plant Steam Requirements

a. Steam jet air ejectors

1) 1st and 2nd stage SJAE Supply 200 psig

2) 3rd stage SJAE Supply 200 psig

b. RECHAR off-gas pre-heater

1) 250 psig steam supply for pre-heater

c. Gland seal steam

1) Pressure control valve supplies 3.5# turbine shaft sealing steam.

d. Turbine driven Reactor feedwater pumps

1) 6" Supply line

2) Supplies high pressure steam for Reactor Feedwater pump turbines, A, B, & C

13. Turbine Stop Valves & Control Valves

a. Covered in Turbine & Electro Hydraulic Control Lesson Plans

F. INSTRUMENTATION

1. Control Room Indications

Instrument	Type	Range
Steam line flow	4 indicators	$0 - 4 \times 10^6$ 16/hr
Total steam flow	recorder	$0 - 16 \times 10^6$ 16/hr
Turbine throttle pressure	1 indicator	0 - 1200#
*Safety & relief valve temperatures	multipoint recorder	$0 - 600^\circ$ F
Main steam line radiation	1 meter 1 recorder	$0 - 10^6$ mr/hr (6 decade log scale)
*Steam tunnel temperature	recorder	$0 - 600^\circ$F

*Located on back panels

2. Local Indications

a. Turbine building

Instrument	Type	Range
Main steam header pressure	gages	0 - 1200#
EHC pressure	transmitters	0 - 1200#

3. Significant Interlocks, Trips and Alarms

Item	Setpoint	Function
Safety & relief valve high temperature alarm	150° F	Indicates possible leakage past valve. Verifies valve open.
Main steam line high flow	140% of rated steam line flow	Initiates Group I isolation Indicates possible break outside containment.
Main steam line high radiation	Alarm 1-1/2 x normal trip 3x normal (Normal is average reading @ 100% power)	Alarm alerts operator of possible fuel damage. Trip initiates 1) Group 1 isolation 2) Secures Mechanical vacuum pump and valving 3) Isolates Condenser air tray 4) Closes off-gas system stack isolation valve

Monitor	Alarm	Trip
RM-90-136	≤ 637 Mr/hr	≤ 1275 Mr/hr
RM-90-137	≤ 637 Mr/hr	≤ 1020
RM-90-138	≤ 637 Mr/Hr	≤ 705
RM-90-129	≤ 637 Mr/Hr	≤ 1275

Main steam low pressure	Alarm & Trip 850#	If mode switch is run - initiates Group I isolation. Protects against rapid cooldown due to failure of pressure regulator.
Main steam isolation valve position	<90% open (bypassed if <1055# and mode switch not in Run.)	Scram reactor on certain combinations of valve closure.

Instrument	Type	Range
Steam tunnel high temperature	Alarm 150°F Trip 194°F	Alarm alerts operator to possible steam leak in tunnel. Trip initiates Group I isolation, indicates steam leak in tunnel outside of containment.

G. OPERATIONAL SUMMARY

1. Normal Operation

   a. All MSIV's open.

   b. All safety, relief and safety/relief valves closed.

   c. All drain valves closed except 57 and 59 valves

      1) provides continuous low point drain path

   d. Bypass valves closed.

2. Operation with Isolation Valves Closed

   a. Closure of one main steam line will never cause a scram.

   b. Closure of 2 main steam lines may cause a half-scram

   c. Closure of 3 or more steam lines will always cause a scram.

   d. Reference to Reactor Protective System Lesson Plan.

   Note: Scram occurs due to isolation valve closure if reactor pressure is 1055# or if mode switch is in Run.

3. Group I Isolation

   a. Upon receipt of a Group I isolation signal, these valves will automatically close:

      1) all MSIV's
      2) #55 & #56 main steam drain valves
      3) Reactor water sample line
      4) Actions resulting from MSIV closure
         a) #57 and #58 valves open
         b) #168, #169, #170, and #171 close (follow MSIV position. closed or open.

4. Relief valves may sometimes be used to control pressure when isolated.

   a. Operator should alternate relief valves every 5 minutes.

      1) Water in suppression pool may overheat locally.

         a) Could damage the coating on the inner surface of the suppression pool.

         b) Could release free steam to the torus.

5. Do not allow steam lines to become flooded when Reactor is hot due to possible lifting of safety valves and relief valves.

H. RELATIONSHIPS WITH OTHER SYSTEMS

1. Main steam system is part of primary containment.

2. Steam flow signal provided to:

   a. Reactor level control system.

   b. Primary containment isolation logic.

3. Limit switches on MSIV's provide position input to the Reactor Protective System.

4. Main steam radiation monitor provides signal to:

   a. Primary containment isolation logic.

   b. Reactor protective system.

   c. Off-gas isolation logic.

5. Pressure equalizing header is source for turbine EHC system pressure signal.

6. Balance of plant steam supplies:

   a. Off-gas system

      1) 1st and 2nd stage SJAE

      2) 3rd stage SJAE

      3) RECHAR pre-heater

   b. Turbine driven Reactor feedwater pumps.

c. Gland seal steam

d. MPCI turbine

e. RCIC turbine

7. Safety-relief Valves

a. Part of the Emergency Core Cooling System (6 S/RV part of ADS)

1) Required to reduce pressure to permit low pressure systems to inject into the vessel.

8. Bypass steam to condenser

9. Air Supplies

a. Drywell control air supplies the inboard SMIV's and the Target Rock Safety & Relief valves.

b. Control air system supplies the outboard MSIV's
RPS bus supplies 120V AC solenoid valves for MSIV's.
250V DC battery supplies 250V DC solenoid valves for MSIV's.

I. TECHNICAL SPECIFICATIONS

1. MSIV closure scram shall be ≤10% valve closure from full open.

a. This scram anticipates the pressure and flux transients which occur when the valves close.

b. Automatically bypassed if ≤1055# steam line pressure and mode switch not in Run.

1) Plant is stable if ≤1055# with MSIV's closed.

2. Main steam low pressure initiation of Group I isolation shall be 825#.

a. If the pressure regulator fails in a manner which causes rapid depressurization, excessive cool down rates may be encountered.

b. Automatically bypassed in any mode switch position except Run.

1) Allows plant to heat up and pressurize.

3. Main steam line high radiation setpoint shall be ≤3 x normal.

a. Initiates Group I isolation.

b. Scrams reactor (direct scram).

c. Alarm shall be 1-1/2 x normal.

d. Normal is background radiation level at rated power.

e. Isolates off-gas system

4. High flow main steam isolation shall be 140% of rated steam flow for that line.

a. Isolates a break outside containment and limits radioactive release to the environs.

b. Conserves reactor coolant inventory.

c. Prevents excessive P across core internals.

5. Steam tunnel high temperature isolation shall be 200^{0} F.

a. Isolates small break outside containment before it becomes a large one.

b. Acts as back-up to 140% steam flow isolation.

6. Reactor Low-low water level trip setpoint is 129.7" above the top of the active fuel. (-38" on instrument)

a. Isolates main steam isolation valves to conserve inventory.

7. Maximum allowable reactor coolant system pressure with irradiated fuel in the vessel is 1250# + 10% transient overpressure.

a. 1250# + 125# = 1375#

b. Highest pressure in vessel is in bottom head region.

c. Pressure is sensed in steam dome region.

d. The recirculation system piping's transient pressure limit is in excess of 1375 psig.

For further information consult RPS and PCIS Lesson plans.

8. Safety Valve Setpoints

a. Safety valves - 2 valves @1,250 psig

b. Safety/Relief Valve setpoints
1) 4 valves @ 1,105 psig
2) 4 valves @ 1,115 psig
3) 3 valves @ 1,125 psig

c. Bases

1) The total safety/relief valve capacity has been established to meet the overpressure protection criteria of the ASME Code.

2) The distribution of the required capacity between safety/relief valves and safety valves has been set so that the safety relief valves will prevent opening of the safety valves during normal plant isolations and load rejections.

9. When more than one valve, safety or safety/relief, is known to be failed, an orderly shutdown shall be initiated and the reactor depressurized to less than 105 psig within 24 hours.

10. At least one safety valve and approximately one-half of all safety/relief valves shall be bench-checked or replaced with a bench-checked valve each operating cycle. All 13 valves (2 safety and 11 safety/relief) will have been checked or replaced upon the completion of every second cycle.

11. Once during each operating cycle, each relief valve shall be manually opened until thermocouples downstream of the valve indicate steam is flowing from the valve.

12. The integrity of the relief/safety valve bellows shall be continuously monitored.

13. At least one relief valve shall be disassembled and inspected each operating cycle.

14. Five of the six valves of the Automatic Depressurization System shall be operable:

a) prior to a startup from a cold condition or,

b) Whenever there is irradiated fuel in the reactor vessel and the reactor vessel pressure is greater than 105 psig, except as specified in requirements 15 and 16.

15. If two ADS valves are known to be incapable of automatic operation, the reactor may remain in operation for a period not to exceed 30 days, provided the HPCI system is operable.

16. If more than two ADS valves are known to be incapable of automatic operation, the reactor may remain in operation for a period not to exceed 7 days provided the HPCI is operable.

17. If requirements 15 and 16 cannot be met, an orderly shutdown will be initiated and the reactor vessel pressure shall be reduced to 105 psig or less within 24 hours.

Revision _____

Date _____

BWR SYSTEMS

LESSON PLAN

A. MAIN TURBINE

B. REFERENCES

1. BWR Systems Manual Chapter 2.6
2. Browns Ferry FSAR Chapter 11.2
3. Browns Ferry OI's 47 and 3
4. Peach Bottom BWR Discussions Chapter 6.3

C. OBJECTIVES

1. General Description
2. Flow Paths; Steam and Auxiliaries
3. Major Components
4. Auxiliary Systems
5. Turbine Trips
6. Reactor Scrams Originating with the Turbine
7. Technical Specifications Associated with Turbine and Auxiliaries

D. BRIEF DESCRIPTION

1. Purpose:

   To convert thermodynamic energy of the reactor steam into mechanical energy to drive the main generator.

2. Basic Description (Figure 1)

   a. One high pressure (HP) section

   b. Three low pressure (LP) sections identified consecutively as A, B, and C from the HP section to the generator.

   c. 1800 rpm

d. Tandem-compound, Six-flow

1) Tandem-compound means that each section is aligned on the same shaft and that steam leaves the HP section before expansion is complete and then goes through one or more LP sections.

2) Six-flow means that the steam enters at the middle of the LP turbines and flows in both directions.

e. Non-reheat; steam is not reheated before returning to LP turbines.

f. Last stage buckets in the low pressure turbine are 43"

g. Approximate steam conditions:

1) 950 psig throttle pressure at

2) 13.37×10^6 lb./hr. steam flow with

3) 0.28% moisture against a maximum

4) Back pressure of 2" Hg absolute in the main condenser.

3. Steam Flow Path

a. From four main steam lines (24") to

b. Turbine Throttle (24")

c. 18" lines to bypass valves from throttle (9 valves 25% design capacity)

d. 8" lines to

1) Off-Gas Preheaters

2) Reactor Feed Pump Turbine High Pressure Steam Throttles

3) Seal Steam Regulators

4) Steam Jet Air Ejector Regulators

e. Through main stop valves to

f. Steam chest (that area below the seats of the main stop valves to the control valve seats).

g. Through the control valves

h. Through the high pressure turbine

i. Exhausts to the moisture separators (6)

1) Extraction steam from B_1 and C_1 crossover lines supply reactor feed pump turbine low pressure steam throttles (250 - 275 psig setpoint).

j. Dried steam is admitted to the low pressure turbine through six combined intermediate valves (CIV's).

k. Low pressure turbine exhausts to the main condenser.

l. Extraction steam is drawn from various low pressure stages for feedwater heaters.

4. Other Tandem Mounted Components

a. Generator, a four pole, 1,280 MVA at .9 power factor, hydrogen cooled with liquid stator coolant.

b. Exciter, a four pole, 2635 KW, air cooled, 0.97 power factor, 60 cps, wye connected, alter ev (alternator) excitation system.

5. Other Components

a. Low pressure relief valves

1) Set at 250 - 275 psig

2) Protect the LP turbine casing if the main stop and control valves remain open and the CIV stop valves slam shut.

b. Bearings

1) Twelve spherical seat journal bearings

2) A tapered-land thrust bearing mounted at the fixed middle standard.

E. COMPONENT DESCRIPTION

1. Turbine Stop Valves (Figure 2)

a. Quantity is 4.

b. Purpose:

These are emergency valves and function to protect the turbine from fault conditions such as overspeed which could be caused by

1) Failure of the control valves or,

2) Generator trip.

c. Construction

1) All four stop valves are welded together at the below-seat equalizer and thus have interconnected flow paths.

2) Each valve is controlled by an operator at the bottom of the valve via the Electro Hydraulic Control System (EHC).

3) Hydraulically operated open and closed, spring loaded closed.

4) Valve Number 2: (Figure 3)

a) Has an internally mounted pilot valve used for admitting steam to warm the steam chest.

b) Also used to equalize the pressure across the stop valves prior to opening as the valves are designed to open only if the ΔP across them is <130 psig (≈13% of rated steam pressure).

2. Turbine Control Valves (Figure 4)

a. Quantity is 4.

b. Purpose:

1) To regulate the steam to the turbine within the capability of the reactor to supply steam thereby controlling reactor pressure.

2) Also provides the control for rolling, synchronizing and loading of the machine.

c. Construction:

1) Valves are welded directly to their respective stop valves.

2) Each valve is controlled by an operator at the bottom of the valve via the EHC System.

3) Hydraulicially operated open and closed, spring loaded closed.

4) Balanced with internal poppet and balance chamber.

a) When steam is admitted to the steam chest some passes between the valve and valve skirt to pressurize the balance chamber.

b) During valve operation the internal pilot (poppet) valve moves less than 20 mils.

i. Steam is bled past the stem and out the pilot valve seat to the outlet reducing balance chamber pressure.

ii. The valve then opens against less back pressure.

3. Combined Intermediate Valves (CIV's) (Figure 5)

a. Quantity is six (6).

b. Purpose:

1) To protect the turbine from overspeeding during a generator trip or load reject (Load dump).

2) The overspeed might occur even if the stop and control valves close due to flashing of the moisture, in the moisture separators, to steam when the pressure drops within the turbine, piping and moisture separators due to the vacuum in the condenser.

c. Construction

1) Two valves in one:

a) Intercept valve

b) Stop valve

2) Intercept Valve

a) Balanced sleeve type

i. Steam pressure is equalized across the valve, by holes through the mid-valve plate, balancing the valve.

ii. Sleeve means a cylindrical type valve.

b) Variable position valve that regulates turbine speed during overspeed conditions.

i. Slow increase in speed.

aa. Remains full open until ~105% overspeed.

bb. Ramps closed and is full closed at ~107% overspeed.

cc. Begins to re-open at ~102% overspeed, decreasing.

ii. Fast increase in speed.

aa. Begins to ramp closed ~102% overspeed.

bb. Begins to re-open at ~102% overspeed, decreasing.

c) Normally full open valves.

i. Ramp open when turbine speed is selected.

ii. Valves A1, B1, and C1 open first.

iii. Valves A2, B2, and C2 begin to open when valves A1, B1, and C1 just reach the open position and valves A2, B2, and C2 will close smoothly when valve A1, B1, and C1 close below half stroke.

3) Stop Valves

a) Unbalanced Disc - Equal pressure across the valve is not required as the valve is either full open or full shut.

b) Closes on a turbine trip.

c) Strictly an emergency valve.

4) Each valve is controlled by an operator at the bottom of the valve.

5) Hydraulically operated open and closed, spring loaded closed.

4. Associated Valve Equipment

a. Basket Strainers

1) Installed on Main Stop Valve and Combined Intermediate Valves.

2) Purpose is to prevent injection of foreign material through valves to turbine.

3) Usually removed following initial turbine operation.

4) Usually available for re-installation following maintenance.

b. Valve Linkage

1) On all valves except bypasses.

2) Purpose is to provide valve control as valve parts are differentially expanding and contracting during heatup or cooldown.

5. Turbine Inlet Relief Valves (Low Pressure Relief Valves)

a. Quantity is 6.

b. Purpose:

Protect the turbine low pressure piping and moisture separators from overpressure which would occur if the CIV's failed in the closed direction with steam still being supplied to the high pressure turbine.

c. Pressure setpoint is 250 - 275 psig.

d. Discharge of the valves is piped to the main condenser.

6. Extraction Non-Return Valves (Figure 6)

a. Quantity: (9)

One on each extraction steam line from the LP turbine section to the 1, 2, and 3 feedwater heaters in each string (A, B, and C)

b. Purpose:

To protect the turbine from overspeed which might occur when the turbine is tripped and subsequent lowering of pressure in the turbine and heaters (due to vacuum in the condenser) results in flashing of the moisture in the heaters to steam and passage of this steam back into the turbine, through the blading and on to the condenser (more in feedwater system LP).

c. Construction

1) Ordinary check valve

2) Air cylinder on the disc keeps disc lifted up out of the flow path under normal conditions to minimize resistance to steam flow.

3) When turbine trips, air is bled off from the air cylinder allowing the disc to fall partially down into the flow path.

4) If reverse steam flow occurs, the disc slams shut.

7. Bypass Valves (Figures 7 and 8)

   a. Quantity is 9.

   b. Bypass capacity is 25% by design.

   c. Purpose:

      1) To permit establishing a flow of steam to the condenser in preparation for rolling and loading the machine.

      2) Also handles excess steam while unloading the machine or during a turbine trip (at low power).

      3) Used for passing steam to the condenser on a reactor cool-down for decay heat removal.

   d. Construction

      1) Physically located above the turbine throttle. (Figure 9)

         a) Numbers refer to opening sequence.

         b) Discharge is to condenser through pressure reducing orifices.

         c) All bypass valve inlets are welded together forming a header.

      2) Valve Assembly (Figure 8)

         a) Valves are operated sequentially by EHC oil pressure.

         b) Flow path is from inlet header to main condenser.

8. Turbine Valve Lineups:

   See Table 1.

9. High Pressure Turbine Section (Figure 9)

   a. Consists of:

      1) Front Standard (1)

      2) Six stages (6)

      3) Steam inlet (7) (turbine admission bowl)

4) Exhaust to moisture separator (17, 18, and 19)

5) Journal bearings (2 & 10)

6) Thrust bearing (12)

7) Thrust bearing wear detector (11)

8) Coupling to LP (15)

b. Steam is admitted to the turbine admission bowl through four lines at equal circumferential intervals at the center of the turbine. This is called full arc admission.

c. Each end has six stages.

d. Each stage has moisture removal by annuli at blade tips. Drains internally to last stage.

e. A journal bearing at each end of the HP section provides the only vertical support for the rotor. Normal bearing oil temperature is 150° - 160°F.

f. Steam exhausts to the moisture separators ~192 psig and 14% moisture goes to six moisture separators.

10. Thrust Bearing

a. Located between journal bearings 2 & 3 between the HP and first LP turbine (A). (Middle standard)

b. Purpose:

To prevent any axial motion of the turbine and generator rotor in order to maintain proper clearances between rotating blades and stationary diaphragms.

c. Axial thrust can occur, for example, due to imbalanced steam extraction.

d. A thrust bearing wear detector located on the bearing will detect excessive thrust bearing wear (>0.035") in either direction and will trip the turbine. (Operation covered in G.4.a.)

e. Bearing oil at 25 psi is fed into the thrust bearing by separate feed lines to each thrust plate. Temperature of inlet oil should be 110 to 120°F. The normal temperature rise should not exceed 25°F.

Each thrust plate contains two thermocouples embedded in the plate backing metal. These thermocouples serve as an additional temperature indicating device for the bearing.

Normal temperatures	140 - 175°F
	125 - 150°F (Unloaded plate)
High temperature alarm	180°F
Maximum operating	190°F

11. Front Standard

a. Located on the end of the high pressure turbine.

b. Purpose:

To house various turbine control components such as:

1) Hydraulic trip system

2) Auxiliary control rotor gears assembly

3) Mechanical trip and reset device

4) Oil trip and reset valve

5) Overspeed trip device

6) Electronic low speed switch

7) Speed sensing head

8) Main oil pump

9) Torque shaft, levers

10) Shell expansion detectors

11) Differential expansion detectors

12) Oil gages and valves

13) Shaft Grounding Device--This device consists of a spring-loaded flood lubricated shoe with silver ribbon inserts. These spring loaded shoes run on the turbine stub shaft extension, on the front standard. The oil film is thin enough so that an adequate ground exists. This system is necessary because direct-current voltages are produced by electrostatic action in the wet stages of the turbine.

c. EHC components will be discussed in detail with the EHC System.

12. Moisture Separator

a. There are six units.

b. Purpose:

To remove moisture from the steam before entry to the low pressure turbine.

c. Moisture Removal Section

1) Peerless type moisture removal sections.

2) "Fish hooks" remove moisture which is piped to the moisture separator drain tank. (Same principle as for reactor vessel steam drier assembly.)

3) Dry steam passes to the low pressure turbine.

13. Low Pressure Turbine Sections C (Figure 10)

a. Consists of:

1) Journal bearings (20, 28)

2) Eight stages (7 through 14)

3) Atmospheric relief diaphragms

4) Moisture removal annuli (30)

5) Rotor coupling (27)

b. There are three LP sections.

c. Units are designated A, B, and C starting from the HP end. Each section has eight stages (7 through 14). Last stage blading is 43".

d. Steam is admitted to each LP turbine in two lines through the CIV's.

e. Exhaust is to the individual sections of the main condenser.

f. Inner casing holds the stationary diaphragms.

g. Exhaust hood:

1) Channels steam to the condenser and provides a means of sealing the rotor shaft.

2) Operates at approximately main condenser pressure.

h. Moisture Removal

1) Each stage has a moisture removal annulus.

2) The collected moisture drains to the feedwater heaters at designated points.

i. Overpressure Protection

1) Each of the outer casings has two atmospheric relief diaphragms.

2) Purpose:

To protect the exhaust heed and main condenser from overpressure which, for example, would occur if condenser vacuum was lost and steam continued to be sent to the turbine.

3) Consists of a copper-silver alloy sheet.

4) Under normal conditions with the condenser at vacuum, the diaphragm is dished inward.

5) On overpressure of 5 psid from within the exhaust, the diaphragm is forced outward against a cutting knife thereby opening the relief diaphragm permitting exhaust of up to rated steam flow.

14. Turning Gear

a. Located between the last LP turbine (C) and the generator.

b. Purpose:

To slowly rotate the reactor at 3 to 5 rpm when machine is shutdown to prevent rotor bowing.

c. Description:

1) A 60 Hp. AC motor driving a pinion gear that meshes with the turbine shaft bullgear.

d. Engagement - Disengagement

1) Automatically engages on coast down when machine reaches 0 rpm by operating a solenoid air valve which ports air to an air cylinder connected to the engaging mechanism.

2) Can be manually engaged via operation of the same solenoid as above.

3) Can be manually engaged locally via solenoid directly connected the hand lever.

4) Can be manually engaged locally with a wrench on the squared end of the external projection of the torque shaft engaging mechanism.

5) Automatically disengages upon rolling of turbine.

e. Interlocked to prevent operations unless bearing oil header pressure is > 10 psig.

f. Receives constant lubrication from the bearing oil header at 4 gpm through a restricting orifice when header is pressurized.

15. Control Room Instrumentation

a. Item	Device	Range
a. Turbine Throttle Pressure (2)	Indicator	0 - 1500 psig
b. Steam Chest Pressure	Indicator	0 - 1500 psig
c. Turbine Speed	Indicator	0 - 2500 rpm
d. Turbine Speed/Valve Position	Recorder	0 - 5000
1) Red Pen Turbine Speed/Control Valve Opening		0 - 100%
2) Black Pen Bypass Valve Opening		0 - 100%
e. Valve Position	Indicators	0 - 100%
1) One for Each Stop, Control, Intermediate Stop, Intermediate Control, and Bypass Valve		
f. Turbine Vibration; Eccentricity	Recorder	0 - 15 mils
g. Turbine Temperature, Differential Expansion	Recorder	
1) Shell Expansion	Pt - 1	0 - 1"
2) Differential Expansion	Pt - 2	0 - 0.5"
3) Rotor Expansion	Pt - 3	0 - 2"
4) Turbine Temperature	Remaining Pts.	0 - 800°F. 9

F. TURBINE AUXILIARY SYSTEMS

1. Exhaust Hood Spray System

a. Purpose

During machine startup or at low loads, steam flow to the last few stages of the low pressure section is so low that:

1) Little cooling of the blading is provided by the steam and

2) The blades in the last 1 ÷ 2 sections are actually pumping the steam through the machine (not designed as pumps).

This result in significant heating of the last stage blading and inner casing.

Some cooling must be provided in order to prevent distortion of radial and axial shaft to casing clearances.

Problem is worsened if have significant non-condensables in steam.

b. Brief Description

System consists of:

1) Temperature sensors in the A & C low pressure hoods to detect high temperature conditions. The highest reading detector controls the automatic spray system.

2) An air operated, temperature controlled automatic water spray valve that controls the flow of demineralized water from the condensate system. Maximum flow is 130 gpm at 100 psig with no load on the turbine.

3) A motor operated bypass valve is provided for bypassing the automatic spray valve in the event of its failure.

CAUTION

Do not use bypass valve if exhaust hood temperature is ~135°F and turbine-generator is loaded.

4) Spray nozzles that spray down into the turbine exhaust hood, not the blading or casing, and thus provide indirect cooling of the blading.

5) Instrument air is used for system control.

c. Control Room Instrumentation

Item	Device	Range
Exhaust Hood Temperature (3)	Indicators	0 - 300°F.

d. Significant Interlocks

1) Automatic Temperature Control Valve

a) Begins to open at 120°F.

b) Is full open at 200°F.

2) Alarms in Control Room at 175°F.

3) Turbine is tripped at 225°F.

2. Turbine Lube Oil System (Figure 11)

a. Purpose

To supply oil to the following:

1) Turbine and generator bearings

2) Thrust bearing and thrust bearing wear detector

3) Overspeed trip reset

4) Oil to test the mechanical overspeed trip device

5) Turning gear

b. Brief Description (Figure 11)

Consists of the following components:

1) Main lube oil tank

2) Main shaft oil pump (MSOP)

3) Oil driven booster pump

4) Motor suction pump (MSP)

5) Turning gear oil pump (TGOP)

6) Emergency bearing oil pump (EBOP)

7) Bearing lift pumps

8) Oil coolers

9) Vapor extractor

10) Oil purifier and purifier pump

11) Clean and dirty lube oil storage tanks and transfer pumps

c. Flow Path

1) Prior to Rolling Turbine

a) Turning gear is engaged and turning.

b) TGOP is providing lube oil to bearings at ~40 psig at the tank.

c) Lift pumps are providing high pressure lifting oil at bottom of bearings.

d) Motor suction pump is running providing ~20 psig at MSOP bearing lubrication.

2) When Turbine is on Line (At speed)

a) MSOP provides oil at 225 psig to booster bypass and baffler valves.

b) Booster baffler reduces the oil pressure to the oil driven turbine of the booster pump to ~150 psig.

c) Oil exiting the turbine end of the pump goes to the coolers then on to the bearing header ~40 psig at the tank.

d) Raw cooling water to the oil coolers is thermocouple controlled to maintain oil temperature at 100°F. out of the cooler.

e) Oil from the booster pump supplies oil to the suction of the MSOP at ~20 psig.

f) Motor suction pump, turning gear oil pump, emergency bearing oil pump and lift pumps are off.

3) During Turbine Coastdown Following a Turbine Trip

a) MSP will automatically start 10 psig, at the MSOP suction, to maintain suction pressure to MSOP to prevent damage.

b) TGOP will automatically start at 15 psig bearing oil header pressure to prevent bearing damage.

d. Component Description

1) Main Lube Oil Tank Capacity

a) Operating Level	11,450 gallons
b) Backflow to tank when shut down	3,500 gallons
c) Total System capacity	14,950 gallons

2) Main Shaft Oil Pump (MSOP)

a) Purpose:

In conjunction with the turbine driven booster pump, satisfy all lube oil requirements while the machine is at speed without reliance upon electrical power.

b) Located in the front standard.

c) Double suction, single stage, centrifugal pump driven at 1800 rpm by the main turbine shaft.

d) Provides adequate oil pressure and flow sufficient to meet lubrication requirements when at 90% of rated speed.

e) Discharge pressure is ~225 psig to the booster pump.

3) Oil Driven Booster Pump and Baffler Valves

a) Purpose:

In conjunction with the MSOP, provide complete oil supply without reliance upon electrical power when the machine is on the line.

b) Pump has two functional sections:

1) Turbine end:

Drive pump end and also provides low pressure oil to the bearing header at 50 psig at tank level.

2) Pump end:

Provides oil to suction of MSOP at 20 psig.

c) The booster baffler valve provides for proper adjustment of oil flow to the booster pump turbine.

d) The booster baffler bypass valve controls oil flow to the bearing header.

4) Motor Suction Pump (MSP)

a) Purpose:

To provide oil to the MSOP, to provide adequate suction pressure, whenever the turbine is at < 90% of rated speed.

b) Description:

A 60 Hp. AC motor driven centrifugal pump having a discharge pressure of ~40 psig.

c) Power Supply:

480V AC Unit Board 1B. A bus not normally supplied by the diesel generator.

d) Starting: Auto if Main shaft oil pump suction pressure ≤10 psig.

5) Turning Gear Oil Pump (TGOP)

a) Purpose:

To provide oil to turbine bearings and lift pumps when machine is not at speed.

b) Description:

A 60 Hp. AC motor driven centrifugal pump having a discharge pressure of ~40 psig.

c) Power Supply:

480V AC Shutdown Board 1B. From a bus which can be energized by the diesel-generator.

d) Starting: Auto when pressure at tank < 15 psig.

6) Emergency Bearing Oil Pump (EBOP)

a) Purpose:

To provide lube oil to the turbine and generator bearings in the event of a loss of all AC power.

b) Description:

A 40 Hp., 350A, DC single stage centrifugal pump with a discharge pressure of ~30 psig.

c) Power Supply:

From 250V DC Battery Bus 4 normally, alternate 250V DC Battery Bus 1.

d) Starting: Auto if TGOP discharge < 10 psig.

7) Bearing Lift Pumps

a) Purpose:

To provide high pressure oil at the bottom of each bearing to physically lift the rotor up off the bearing ~3 - 5 mils when the machine is on the turning gear, in order to reduce rotor/blade chatter and turning gear torque.

b) Description:

Five 10 Hp. AC motors drive 10 positive displacement pumps (one for each turbine bearing).

c) Power Supply:

i. Pumps 1-6 from 480V AC RMOV Board 1A.

ii. Pumps 7-10 from 480V AC RMOV Board B.

iii. From a bus which can be energized by the diesel generator.

d) Suction source for pumps is bearing oil heads.

e) Starting: Pumps auto start when turning gear engages and starts

NOTE: Operation of the pumps will not affect rotor performance at speed, and it is recommended that lift pump operability be checked at least once per month. Generally lift pumps should be operated any time turbine speed is 200 rpm and at all times when the unit is on turning gear. If on turning gear and one or more lift pumps are not available, the unit may be left on turning gear as long as there is no shaft chatter, nor excessive turning gear motor current. If chatter exists and oil temperatures are 80-90°F the unit should be taken off turning gear and rotated 180° every 15 minutes.

8) Turbine Lube Oil Coolers

a) Purpose:

To maintain the lube oil bearing inlet temperature between 110° - 120°F.

b) Description:

i. Two 100% capacity coolers, each submerged in the oil tank.

ii. Cooled by raw cooling water at 3500 gpm maximum design flow on the tube side.

9) Vapor Extractor

a) Purpose:

Removal of saturated air above the oil in the tank promotes evaporation of any water in the oil and reduces moisture condensation and accompanying rust in the system.

b) Description:

i. A 5 Hp. AC motor driven fan takes suction from top of lube oil tank and exhausts to Turbine Building roof after passing through an oil mist eliminator.

ii. Maintains 1/2 to 1-1/2" H_2O vacuum.

c) Power Supply:

480V AV turbine building ventilations board 1A

10) Bulk Lube Oil Storage and Transfer (P&ID M-41)

a) Lube Oil Purifier

i. Purpose:

To provide continuous cleanup of the lube oil.

ii. Description:

aa. One 100% systems

bb. Rotary gear type lube oil pumps and centrifuse type purifier.

cc. Capacity 1000 gallons per hour

b) Clean Lube Oil Storage Tank

i. 30,000 gallon capacity

ii. Storage for immediately available clean lube oil.

c) Dirty Lube Oil Storage Tank

i. 30,000 gallon capacity

ii. Storage for spent oil prior to offsite shipment for reprocessing or for purifying.

d) Lube Oil Transfer Pump

i. Purpose:

To transfer oil from tank to tank within the lube oil system.

ii. Description:

aa. Two 5 Hp. AC motor driven pumps

bb. Discharge 100 gpm each

iii. Power Supply:

480V AC turbine building ventilation board 1A

e. Control Room Instrumentation

Item	Device	Range
1) Bearing Oil Header Pressure	Indicator	0 - 100 psig
2) Lube Oil Tank Pressure	Indicator	0 - 100 psig

3. Shaft Sealing System

a. Purpose:

To provide sealing for the high and low pressure turbine rotors to prevent:

1) Radioactive steam from entering the Turbine Building, and

2) Non-condensables from entering the condenser.

b. Brief Description:

Steam is provided at 3.5 psig by means of a pressure control valve to labyrinth type shaft packings on the high pressure and the three low pressure turbine sections and to the RFP turbines.

c. Components

1) Steam Seal Regulator Assembly (Figure 14)

a) Steam seal feed valve, air operated

b) Steam seal bypass feed valve, motor operated

c) Steam seal unloading valve, air operated

d) Steam seal unloading bypass valve, motor operated

e) Steam seal supply from main steam header motor operated

f) Steam seal supply from aux. boiler motor operated

g) Relief valves (4)

h) Steam seal header

2) Gland Seal Condensers (2) (one Shown)

3) Steam Packing Exhausters (2)

4) Labyrinth-type Turbine Shaft Packing

a) Pressure Packing (Figure 12)

i. Pressure Packing (Figure 12)

ii. First leak off is to extraction steam line to the HP feedwater heaters.

iii. Seal steam header at 4 psig.

aa. Supplied by steam seal feed valve during startup and at light loads.

bb. Maintained at high loads by leak through from HP turbine and action of seal steam unloading valve.

iv. Gland Seal Exhaust Vent

aa. Held at slight vacuum by gland seal exhauster

bb. Removes air in-leakage and any steam leaking from gland seal steam header.

b) Vacuum Packing (Figure 13)

i. Used on LP turbine only.

ii. Gland seal from seal steam header to reduce air in-leakage.

iii. Gland exhaust; vacuum maintained by gland exhauster to remove air in-leakage and seal steam leaking back.

d. Flow Paths (Figure 14)

1) Shutdown to 300 psig Reactor Pressure

a) Steam is supplied to the steam seal feed valve from the house auxiliary boiler.

i. An air operated pressure control valve.

ii. Reduces pressure to 4 psig downstream of valve.

iii. Valve fails open on loss of signal or air

b) A steam seal bypass feed valve is provided bypassing the steam seal feed valve during low pressure steam supply conditions (<250 psig).

NOTE: The steam seal feed valve is designed for rated pressure operation and therefore will not provide adequate seal steam pressure (4 psig) until throttle pressure is >250 psig.

c) Sealing steam is applied to the high and low pressure turbine shaft seals (Figure 12 and 13).

d) A gland exhauster fan provides a vacuum of 5" H_2O to the shaft seal to prevent steam leaking into the Turbine Building.

e) The exhausted mixture of steam, moisture and air is routed to a gland seal condenser to condense all the steam and return the condensate to the main condenser.

f) The gland seal condenser is cooled by the Condensate System.

g) The non-condensables are routed to the Offgas System for processing.

2) Operation from 700 psig reactor pressure to low power turbine operations

a) Same as above except sealing steam is from main steam line

3) High Power Operation

a) As reactor power increases, steam pressure at the exhaust of the high pressure turbine increases.

b) Steam from within the turbine now forces its way outward past the inner packing and attempts to increase the steam seal header pressure beyond 4 psig.

c) Eventually, the steam seal supply pressure control valve completely closes to compensate for this leakage, and the steam seal unloading valve opens as required to maintain 4 psig on the header. (Steam unloading valve fails closed if diaphragm breaks.)

d) The steam seal unloading valve discharges to the A5, B5, and C5 low pressure feedwater heater extraction lines (from turbine 12th stage).

e) A steam seal bypass unloading valve is provided around the steam seal unloading valve in the event it should fail closed.

f) In this mode of operation, steam from the high pressure shaft seals is the sealing steam for the low pressure turbine section seals.

g) Should the pressure control valves fail, the relief valve will maintain seal system at a safe pressure. Manual control of pressure is then possible with the bypass valves.

e. Control Room Instrumentation

	Item	Device	Range
1)	Steam Seal Header Pressure	Indicator	0 - 10 psig
2)	Gland Exhauster Suction Pressure	Indicator	0 - 30" H_2O

G. TURBINE PROTECTION AND REACTOR SCRAM INSTRUMENTATION

1. Turbine Trips

a. Definition

A trip of all turbine valves closed (except the turbine bypass valves.

A trip of the extraction relay dump valve and subsequent closing of all valves controlled by it (See feedwater LP for valves affected).

b. Turbine Trips

Trip	Setpoint	Reason for Trip
High reactor water level	+54"	To prevent moisture carryover from the reactor into the turbine.
Low EHC control oil pressure	≤1100 psig	Prevent loss of control of the turbine.
Low Turbine Trip System oil pressure	≤800 psig	Seals in turbine trip.
High thrust bearing wear wear	>0.035"	Wear greater than this amount is abnormal and is indicative of incipient bearing failure.
Mechanical overspeed	110%	Turbine blading will fail due to high centrifugal force if speed is too great.
Backup electrical overspeed overspeed	112%	Backup protection for the 110% trip.
High LP exhaust hood temperature	225°F.	To prevent damage to last stag blading and inner casing due to overheating, overstressing and possible misalignment.
Loss of stator cooling if generator amps >7726	Coolant Pressure ≤13 psig OR Coolant Temperature ≥95°C	Prevents overheating of the generator stator windings.
Low MSOP discharge	<105 psig @ >1300 RPM	Indicative of failure of MSOP. a broken oil line or loss of oil supply to MSOP. Continued operations could damage the pump or result in a loss of all oil.
Low bearing header oil pressure	<8 psig	Indicative of failure of the lube oil system. Continued operation would probably result in wiped main bearings and possible damage to the machine.

Trips	Setpoint	Reason for Trip
Loss of both speed feedback signals if turbine ≥100 RPM	--	EHC system required at least one speed signal to be able to control the turbine valves.
Loss of condenser vacuum	≤19" Hg	Indicative of loss of heat sink. Turbine is not designed to operate at low vacuum conditions. Operations at low pressure may result in heating of turbine blading and a condenser and low pressure turbine overpressure conditions resulting in rupture of the atmospheric relief diaphragms.
High vibration	10 mils	Prevents damage of turbine components.
Moisture separator drain tank high level	Hi level	Prevents condensate from backing up into the separator and possibly carrying over into the low pressure turbines.
Low bearing oil tank level	--	Protects turbine from consequences of a loss of lube oil.
Generator electrical or main transformer faults:	86 devices	Protects turbine from overspeeding when load is suddenly removed from generator.

1) Generator Differential

2) Main Transformer Differential or Sudden Pressure

3) Generator Backup Relay, Field Failure, or Trnasformer Feeder Differential

4) Station Service Transformer Differential, Overcurrent, Sudden Pressure, or Neutral Over-Current

5) Generator Breaker Failure Relay

6) Generator Negative Phase Sequence

7) Generator Neutral Over Voltage

8) Generator Over-Current

Trips	Setpoint	Reason for Trip
Remote electrical trip	Pushbutton	For operator use in the event he detects a potentially dangerous condition.
Local mechanical trip	Lever	For tripping turbine at the machine.

2. Generator - Load Reject

a. Definition:

A greater than 40% mismatch between the main generator electrical output and turbine power.

Comparison is made between stator amps and turbine crossover pressure.

b. Causes of a Load-Reject

1) Manual opening of main generator output circuit breakers. (OCB's)

2) An "open" in the grid without any lines being grounded.

NOTE: Any automatic trip of the OCB's will result in a generator trip rather than a generator load reject.

c. Results of a Load Reject at <30% Power (measured by 1st stage pressure)

1) Turbine control valves are tripped closed by the fast acting solenoids. (Reactor does not scram).

2) Bypass valves open within their capacity to accept steam that was going to the turbine.

3) EHC load selector begins running back toward zero load.

4) Control valves partially re-open when load-mismatch is <40% to continue carrying house loads and machine windage losses.

5) Load selector runback stops when the load-reject condition is cleared.

6) EHC system will control turbine speed at 1800± RPM due to the EHC speed control network. (Discussed in EHC presentation).

7) No turbine trip occurs.

8) There will be no volts per cycle trip of the generator since voltage regulator will automatically change excitation as required.

10) This condition should not be maintained for any significant period since at low loads, the exhaust hood temperature will rise and the last stage blades are subject to moisture erosion.

3. Reactor Scrams from the Turbine

a. There are only two scrams originating with the turbine.*

b. 1) Main stop valves <90% full open (bypassed <30% power as measured by 1st stage pressure).

2) Generator-load reject (bypassed <30% power as measured by 1st stage pressure).

b. Main Stop Valves <90% Full Open

1) Scram initiated by valve position limit switches.

2) Anticipates the pressure, neutron and heat flux increase caused by the rapid closure of the turbine stop valves.

3) BADC CABD logic identical to MSIV closures.

c. Generator-Load Reject

1) Scram initiated by limit switches on the fast acting solenoids of the turbine control valves.

2) Anticipates the rapid increase in pressure and neutron flux resulting from fast closure of the turbine control valves due to a load rejection.

3) Response to load reject

a) Turbine control valves are tripped closed by the fast acting solenoids and reactor scrams.

b) All bypass valves open to accept steam that was going to the turbine.

c) EHC load selector beings running back toward zero load.

d) Turbine will shortly run out of steam necessary to carry the house-loads and windage losses as the reactor decay heat decreases.

---

* Low EHC oil pressure will generate a scram signal when the turbine is ≥30% power as sensed by 1st stage pressure; but this scram is considered to be EHC rather than turbine oriented.

e) Control valves will eventually end up full open yet the turbine will coast down.

f) Assuming that the voltage regulator is still in automatic, the excitation will be automatically increased to hold the rated output voltage.

g) The generator will eventually trip on overexcitation (volts/cycle trip) to protect the main transformer.

h) The generator trip causes a turbine trip.

4. Control Room Turbine Protection Monitors

a. Thrust Bearing Wear Detector (Figure 15)

1) Purpose:

a) To protect turbine internals by tripping the turbine on excessive thrust bearing wear or loss of lube oil bearing header pressure.

b) Detect gradual wear of both thrust bearing plates.

2) Construction:

a) A hydraulically balanced follower piston.

b) A pilot valve is attached to the follower piston to direct oil to and from pressure switches during normal operation.

c) A sliding bushing that directs oil to the pressure switches during tests.

3) Operation:

a) Once initially adjusted the probe tip will maintain a constant distance from the thrust collar.

i. Oil flows from the bearing header to the top of the follower piston, through the calibrated orifice and out the probe tip to an atmospheric drain.

ii. The follower piston is balanced with half the initial oil pressure on the probe side of the piston.

iii. This pressure is equally developed across the calibrated orifice and the probe tip oil gap.

b) Changing thrust would cause the rotor to move changing the gap between the probe tip and thrust collar.

i. This produces a change in oil pressure and unbalances the follower piston.

ii. The follower piston moves up or down, dependent upon which direction the shaft moved, to rebalance the oil pressure across the piston.

iii. Movement of the following piston positions the pilot valve.

iv. If movement is excessive, in either direction, oil is ported from one of two redundant pressure switches causing a turbine trip.

4) Test of Thrust Bearing Wear

a) Accomplished by continuously pushing two pushbuttons labeled Turbine End and Generator End on Panel 7.

b) This energizes a test motor which drives the driven gear in Figure 15.

c) Allows comparison of thrust collar position to its previous position at the same load.

d) Going to "test" defeats the turbine trip circuits but applies the pressure switch contacts to the test motor circuits.

e) "Test" moves the sliding bushing in one direction until oil is ported from one of the pressure switches whose contacts stop the test motor. The position of the bushing is the output indicated in the control room.

f) Output is calibrated in mils both locally and remotely (control room) and can be compared to previous readings to detect thrust bearing wear.

b. Vibration Recorder and Detector

1) Purpose is to measure the magnitude of the turbine shaft motion in a plane perpendicular to its axis.

a) Provides warning of approaching metal to metal contact and subsequent turbine damage.

b) Trips turbine if vibration is excessive: >10 mils.

2) Construction

a) One detector per bearing

b) A shaft riding detector mounted vertically to the turbine shaft axis:

i. A seismically suspended wound coil in a permanent magnet field provides the output signal.

ii. Output is calibrated in mils.

3) Alarms at 5 mils.

4) Turbine trip at 10 mils, can by bypassed at Turbine Supervisory Instrument cabinet in the Auxiliary Electric Room.

c. Eccentricity Recorder and Detector

1) Purpose is to indicate and record the degree of shaft straightness (bow).

2) Shares the same recorder as the Vibration Detector.

3) Construction:

a) An air gap pickup mounted in the front standard on either side of a steel ring attached to the turbine stub shaft

b) Any change in shaft straightness will alternately increase and decrease the air gap between the shaft ring and detectors.

c) The changing air gap increases and decreases the impedance characteristics of the detector which is electronically converted to a signal that is displayed on the recorder.

d) Output is calibrated in mils.

d. Turbine Expansion and Temperature Recorder

1) Expansion (Figure 16)

a) Purpose is to measure shell and rotor expansion while heating up to warn the operator of possible metal to metal contact within the turbine.

b) During heatup or cooldown of the turbine the rotor and HP shell are free to expand and contract. The LP shells, generator stator and thrust bearing are fixed in place.

c) Recorder points

i. Pt. 1: Shell Expansion, 0 - 1.0"
Upscale on the recorder shows shell expansion toward the front standard.

ii. Pt. 2: Differential Expansion, 0 - 5"
Recorder upscale indicates shell expansion is greater than rotor expansion.

iii. Pt. 3: Rotor Expansion, 0 - 2.0"
Recorder upscale shows rotor expansion is toward the generator.

d) Shell Expansion Detector

i. Measures expansion of HP shell relative to a fixed point on the floor at the front standard.

ii. As the shell moves a mechanical linkage positions an armature between two opposite facing coils changing their impedance.

iii. The coil outputs are converted electronically to correspond to position; calibrated in inches.

e) Differential Expansion Detector

i. Purpose is to measure the differential expansion between the HP shell and rotor.

ii. Mounted in the front standard.

iii. Employs an air gap detector on either side of a collar on the turbine rotor.

iv. During a plant startup as sealing steam is supplied, the rotor tends to heat and expand faster than the shell and hence recorder indication moves toward zero.

v. As the turbine is rolled and temperature equalize, the shell expands and recorder indication moves toward mid-scale.

vi. Normal cold position is mid-scale.

f) Rotor Expansion Detector

i. Similar to differential expansion but measures rotor expansion toward the generator relative to a fixed point on the floor.

ii. The detector is an air gap measuring device using a rotor collar at the generator end.

iii. Output is calibrated to read in inches.

H. TURBINE OPERATIONAL SUMMARY

1. Normal Operations:

Will be covered during the control room phase.

2. Operating Limitations

a. Control Valve Warming Limitations (Figure 17)

1) Procedurally limited to curve ΔT inside to outside metal temperature.

2) Should be essentially at full temperature prior to rolling the turbine to prevent too fast a heatup and possible overstress of the metal due to greatly increased steam flow during rolling.

b. High Pressure Shell Temperature Differential

Limited to ±150°F. ΔT inside to outside metal temperatures to prevent excessive thermal stress.

To prevent large ΔT's, excessive differential expansion and possible high vibration on a startup of a turbine that is not up to temperature, the following restrictions apply:

Classification	HP Turbine Temperature Range	Acceleration Rate	Initial Loading	Loading Rate
Classification				
Cold Turbine	up to 250°F.	60 RPM/min.	3%	*Hold for 30 minutes the proceed as in steady state.
Warm Turbine	250 to 350°F	90 RPM/min.	3%	Proceed as in steady state.
Hot Turbine	>350°F	180 RPM/min.	3%	Proceed as in steady state.

* Allows metal temperature to equalize and exhaust hoods to cool to <125°F.

1) If starting up a cold turbine (first stage bowl temp. <200°F) hold unit at near rated speed for one hour before synchronizing to grid.

c. Steady-state Load Changes (Figure 18)

1) Stay within 150°F. ΔT limitation at all times.

2) Figure 18 shows time limitations applied for both power increases and decreases. (The curved lines are values for the lowest load involved in the change).

Example No. 1:

If the turbine is at 30% power steady state and it is desired to increase power to 90%, the power increase must be made over 14 minutes.

Example No. 2:

If the turbine is at 60% power, steady state and you want to increase power to 90%, there are no time limitations (as the HP shell is already near maximum temperature).

(This is the normal flow control, load following range of operations.)

Example No. 3:

If the turbine is at 100% power, steady state and you want to decrease power to 40%, the power decrease must be made over a 10 minute period.

NOTE: There are no restrictions from the turbine on rate of power change between 60% and 100% power.

d. Heater Out of Service Limitations - Whenever a high pressure feeder at heater string is isolated reduce turbine load to 70%.

1) The turbine is designed to pass a specific amount of steam to the feedwater heaters to heat the feedwater.

2) When heaters are taken out of service, the steam flow through the turbine downstream of the heater extraction lines increases.

3) This would increase the power produced by the turbine but would increase the loading on the diaphragms and blades downstream, particularly on the last stage of the turbine.

Revision _____

Date _____

BWR SYSTEMS

LESSON PLAN

A. FEED AND CONDENSATE SYSTEM

B. REFERENCES

1. Boiling Water Reactor Systems Manual Chapter 2.7
2. Peach Bottom BWR Discussions 7.6
3. High Pressure Coolant Insertion Pump Turbine Drive Technical Manual (GEK-15545)
4. Browns Ferry Nuclear Plant Final Design Report
5. General Electric BWR Thermal Analysis Basis (GETAB) NEDO-10958
6. Browns Ferry Unit #1 and #2 Technical Specifications

C. OBJECTIVES

1. Fully understand the purpose of the system and its design objectives.
2. Know major system components and their relationship to each other.
3. Learn significant system instrumentation, setpoints and interlocks.
4. Understand automatic actions in the system.
5. Technical Specifications associated with system.

D. GENERAL DESCRIPTION

1. Function

a. To supply the reactor vessel with preheated, demineralized water at a rate equivalent to the steam generation rate.

1) 13.33×10^6#/hr. rated feedwater flow

b. To provide an injection path for:

1. Reactor Core Isolation Cooling (RCIC)
2. High Pressure Coolant Injection (HPCI)
3. Reactor Water Cleanup (RWCU)

2. Components and Flow Path

a. Components (Figure 1)*

1) Main Condenser Hotwell (3)

2) Condensate Pumps (3)

3) Steam Jet Air Ejector (SJAE) Condensers (2)

4) Gland Seal Exhauster Condenser (1)

5) Off-Gas Condenser (1)

6) Filter/Demineralizers (9)

7) Condensate Booster Pumps (3)

8) Low Pressure Feedwater Heater Strings (3)

a) Drain Coolers

b) A, B, C, Heaters (5, 4, 3)

9) Reactor Feedwater Pumps (3)

10) Start-Up Bypass Valve (1)

11) High Pressure Feedwater Heater Strings (3)

12) Feedwater Spargers (6)

*Numbers in parentheses indicate number of each component

b. Condensate Flow Path (Figure 1)

1) Main condenser hotwell provides NPSH for condensate pumps.

2) Makeup to hotwell provided by the Condensate Storage Tank (CST).

3) Tap offs on the condensate pump discharge commonline provide for turbine exhaust hood sprays.

4) Condensate next flows through the tube side of:

a) Both Steam Jet Air Ejector (SJAE) Condensers

b) The Gland Seal Exhauster Condenser

(1) Equipped with an air operated flow controlled bypass valve.

c) The Off Gas Condenser

5) Condensate then passes into the condensate filter/demineralizers

a) 8 demineralizers required for 100% flow

b) Bypass valve can handle 33%

(1) Auto opens if ΔP across any filter $\geq$45 psid

6) Excess water in the condenser is rejected to the CST just downstream of the demineralizer.

7) A tap off just down stream of the demineralizers provides a backup means of pressurizing the gland seal system.

a) Normal supply is from the Gland Seal System Hea Tank

b) Details of the Gland Seal System are provided in the Condenser and Circulating Water Lesson Plan.

8) Condensate booster pumps increase the system pressure to provide NPSH to the reactor feed pumps.

9) Tap-offs after the booster pump provide:

a) Recirculation to Main Condenser

(1) Provides minimum flow required for the SJAE condenser to operate efficiently.

(2) Also provides minimum flow requirement for condensate and booster pumps.

(3) Allows cleanup of condenser volume before operating (short cycle).

b) Suction line to the injection pumps which provides reactor feed water pump seal water flow.

10) Main flow path goes through tube side of 3 parallel strings of low pressure feedwater heaters.

c. Feedwater Flow Path (Figure 1)

1) Reactor feed pumps take a suction from the discharge of the low pressure feedwater heaters.

2) Each feed pump discharge can be pumped through a motor operated discharge valve or recirculated back to the main condenser.

3) The feed pumps can be bypassed during periods of low reactor pressure (startup) which is not sufficient to run the reactor feed pump turbine.

a) Startup bypass valve can be automatically controlled by reactor level.

4) The high pressure heaters are next.

a) 3 strings of two heaters arranged in parallel.

b) Flow is through tube side.

c) A "Long Cycle" Recirculation Valve on the down stream side of each high pressure heater allows filling and venting during startup.

5) Feed flow now splits into two lines before penetrating containment.

6) Each line has 2 check valves. The check valves act as primary containment isolation valves.

7) The "B" line contains a tap-in from the cleanup system return line and the RCIC injection line. The "A" line contains a tap-in from the HPCI injection line.

a) Both lines have thermal sleeves to minimize stress.

8) Once inside containment, each line splits again into 3 lines, before penetrating the vessel to supply 6 separate feedwater spargers.

E. COMPONENT DESCRIPTION

1. Main Condenser Hotwells (Figure 2)

a. Purpose

1) Collects Condensate from:

a) Main Turbine Exhaust Steam

b) Bypass Valve Exhaust Steam

c) Reactor Feed Pump Exhaust Steam

d) Various Drain Lines such as:

(1) Main Steam Lines

(2) RCIC Steam Line

(3) HPCI Steam Line

(4) Steam Jet Air Ejector Condenser

(5) Gland Exhauster Condenser

(6) Off Gas Condenser

(7) Gland Seal System

(8) etc.

2) Retains condensate for about 2 minutes to allow decay of short lived activity (N^{16}).

3) Provides NPSH for condensate pumps.

a) Capacity 3 minutes of full power operation

b. Construction

1) Located at the bottom of each condenser shell

2) Incorporates reheating and deaerating features

a) Most deaeration occurs in tube bundles but lower bundle and hotwell further deaerate

3) Longitudinally divided into two sections by horizontal collection trays.

4) Reheat steam coils below collection tray

a) Provide dearate steam at low steam flows from main steam system.

5) Pipes distribute portions of exhaust steam to below collection trays during high steam flows.

6) All three hotwells interconnected by 30" crossover pipe for pressure and level equalizing.

7) Each hotwell has a separate condensate outlet to a common suction header for all condensate pumps.

c. Operation

1) Steam Flow Path

a) Steam exhausting from the low pressure turbine flows over condensing tubes and is condensed by the circulating water flowing through the condenser tubes.

b) The condensate formed by the steam condensation collects in the collecting trays of the hotwell.

c) Portions of the turbine shaft exhaust steam are routed by ducting to an area below the collection trays where it is disbursed to flow out through holes in the collection trays and be condensed.

1) This is called reheat steam.

2) Dearation

a) The collecting trays have holes through which condensate flows to the condensate pump suction port. This type of flow tends to atomize the condensate increasing its surface area for heat transfer.

b) The reheat steam (from above discussion) flowing up through the collection tray strikes the downward flowing condensate flashing the condensate to steam and liberate noncondensables to the condenser air removable system. The reheat steam is condensed in the process.

c) During low steam flow conditions (startup) steam from the main steam header can be admitted to the reheat steam coils for the same purpose.

3) Condensate Flow Path

a) Once in the hotwell, condensate is forced to flow around baffle plates before reaching the condensate pump suction lines.

(1) Provides ~2 minute holdup time to allow for decay of N^{16}

(2) Provides storage space for 90,000 gallons of water, at a normal level of 27".

4) Level Control

a) Makeup

(1) Normal through "4" level control valves from CST.

(a) Valve controlled by level indicating controller normally set to open valve when level falls about 6" from normal (~21" in hotwell).

(2) Emergency makeup from CST through 10" motor operated level control valve.

(a) Operator manually controls valve from control room.

(3) Low level alarm 15" in hotwell.

5) Reject

a) Normal through "4" level control valve to CST

(1) Valve controlled by level indicating controllers set to open valve when level rises about 6" from normal (~33" in hotwell)

b) Emergency reject to CST through 10" motor operated level control valve.

(1) Operator manually controls valve from control room.

c) High level alarm 39" in hotwell.

d) Condensate pumps provide driving force for reject.

e) Reject flow cleaned up by filter/demineralizer units prior to returning to CST.

(1) Eliminates impurities from leakage of condenser tubes during shutdown periods.

2. Condensate Pumps

a. Three Condensate Pumping Units

1) Each unit consists of one condensate pump and motor.

a) Each motor is 900 hp., 3 phase, 60 Hertz, 4160 volt induction motor with a speed of 1800 RPM.

b) Power supplies are from unit Boards 1A, 1B, and 1C respectively for pumps 1A, 1B, and 1C.

2) Each pump is rated at ~5.4 x 10^6#/hr. (33% of rated flow, 10,830 GPM).

a) The above ratings are based on normal operations, runout ratings allow two pumps in runout to supply 92% of rated plant condensate flow.

3) The only pump trips or electric interlocks associated with condensate pumps are electrical fault trips.

4) Pumps have mechanical seals with seal water being supplied from the pump discharge backed up by the gland seal tank.

5) All pump bearings are water lubricated while the drive motor has its own oil reservoirs for the motor thrust and journal bearings.

a) Pump motor jacket is cooled by Raw Cooling Water.

3. Steam Jet Air Ejector Condensers

a. Each condenser is sized to pass rated condensate flow for air ejector requirements through the tube side.

b. Only one condenser is necessary for full power operation.

1) Both normally valved in because of the automatic start features associated with the Standby Air Ejectors.

c. Shell side drains go to condensate drain tank via loop seals.

4. Gland Seal Steam Condenser

a. Condenses steam from the gland seal steam system.

b. Shell side of condenser maintained at slight negative pressure by steam packing exhauster.

c. Drains go to condensate drain tank via loop seal.

5. Off-Gas Condenser

a. Cools superheated discharge of the recombiner from ~800°F to <130°F.

b. Shell side drains go to condensate drain tank via loop seal.

6. Heat Exchanger Flow Balancing Valve

a. SJAE Condensers, Gland Seal Steam Condenser, and Offgas Condenser are all in parallel condensate flow paths.

b. Each of the above heat exchangers presents a different resistance to flow with a corresponding probability that the heat exchanger with the least resistance during periods of low flow would rob the remaining heat exchangers.

c. Gland Seal Condenser presents most limiting flow restriction.

d. Flow balancing valve auto control flow through valve based to excess of that required for Gland Seal Condenser.

1) Assures most limiting component has sufficient flow.

2) Air Operated Valve Normally Run in Auto

3) Controller is Local

7. Condensate Filter/Demineralizers

a. Maintains purity of the reactor feedwater by removing dissolved and suspended solids which result from corrosion in the condenser and associated piping systems and from leakage of cooling water into the main condenser.

1) Reduces damage to components due to chemical and corrosive attack.

2) Reduces the fouling of heat transfer surfaces.

3) Reduces impurities available for activation.

4) Reduces the consequences of condenser tube leaks.

b. In order to meet these requirements, condensate filter/demineralizer effluents will be maintained within the following specifications:

Loading	Effluent
Total Dissolved Solids (Conductivity)	<.1μmho/cm*
pH at 25°C	<6-8*
Suspended Solids	<5 ppb
Total Iron	<5 ppb
Total Copper	<2 ppb
Dissolved Silica	<5 ppb
Chlorides	<10 ppb*

1) Conductivity is measured since it is a very good indicator of most impurities.

2) Metallic impurities are limited to prevent excessive plating out on the fuel cladding surfaces and to reduce the amount of activation products.

3) Silicate (SiO_2) is maintained <5 ppb because it will carry over in the main steam system and plate out on the turbine blading.

*All limits in this table are based on Filter/Demin. capacity and are based on a sample at the Filter/Demin. effluent. Items with the asterisks have license limits based on a sample in the vessel. The license limits will be discussed later.

4) Chlorides are maintained low enough to limit the possibility of chloride stress corrosion.

a) <10 ppb chlorides are very difficult to measure. therefore chlorides out of the condensate demineralizer are maintained low enough to keep reactor water chlorides from exceeding their specification.

c. Nine full flow condensate polishing filter/demineralizers known as Powdex (a Graver Corp. Trade Name) are connected in parallel are used as ion exchange mediums and filtering agents (Figure 3).

1) Eight are required for full flow operation, the ninth being a standby unit.

2) Each filter/Demineralizer is:

a) 196' diameter 6'6" high

b) 302 woven nylon filter elements (septums) representing 800 ft^2 of filter area

(1) Elements replaceable through manhole on top

(2) Elements supported by vertical rods

c) Flow enters shell at bottom, flows through septums with filter demin agent on them, and exits through lower tube sheet to unit outlet.

d) Design pressure 700 psi at 150°F

3) Filter/Demineralizer Agent

a) Graver product called powdex

(1) Powdered cation and anion exchange resin in hydrogen and hydroxyl form

(2) Uniformly coated by precoat system to 1/4" on septums

(3) Serves dual function as filtering and demineralizing agent

(4) Non-regenerable and when expanded it is processed as radwaste solids

b) Solka-floc

(1) Graver Corp. name for cellulous fiber filtering agent.

(2) Only used on a few units during reactor startup to remove large amount of suspended solids.

c) Resin Expiration

(1) Conductivity at effluent >1μmho/cm

(a) Conductivity cells at inlet and effluent of system monitor efficiency of all units each has an effluent conductivity cell. Each cond. cell has the following alarms.

i. Hi conductivity any vessel effluent .3 micro mho local

ii. Hi conductivity system effluent .3 micro mho local

iii. Hi conductivity system effluent .5 micro mho local

iv. Any local alarm causes cond. demin. alarm in control room.

(b) Indicates ion exchange capacity limits

(2) Any filter/demin. with a 25 psid pressure drop.

(a) High ΔP indicates restriction to flow caused by filtering process and represents a potential for septum damage.

i. Alarm on system ΔP >40 psid local and control room.

ii. A system ΔP >45 psid auto opens demin. bypass valve which will provide 1/3 of rated condensate flow.

(3) Approximately a 4 week cycle.

d Resin Retention

(1) Each unit equipped with a 60 GPM holding pump

(2) Pumps auto-start if flow through unit drops to 900 GPM to maintain flow through unit and prevent filter/demin. agent from falling off septums.

(a) If coat on septums not maintained it must be re-established prior to unit use to prevent demin./filter agent from being pumped to reactor vessel.

(3) Local alarm pump failure if unit flow drops to 45 GPM

e) Precoat and Backwash System

(1) Precoat necessary to establish filter/demin. agent to ~1/4" on septums prior to unit use.

(2) Precoat System Pump and Tank Arrangement

(a) Pump - 5% slurry of powdex resin to units from precoat tank at 1185 GPM and 100°F conditions.

(b) Tanks (2) - 54" diameter 60" high mixes resins with 1/2 HP mixer

(3) Backwash system air and condensate mixture to flush spent powdex to backwash receiver, tank in radwaste.

(4) Backwashing and precoating are all automatic one unit is placed out of service and the backwash/precoat process is selected locally.

(a) Holding pump will auto hold the precoat until unit is valved back in.

4) Resin Trap (Figure 4)

a) Strainer in unit effluent lines serves as resin trap

b) Catches particulates that might wash through if septum fails.

c) ΔP-across strainer monitored and alarmed high in control room.

d. Flow Balancing System (Figure 4)

1) Each filter/demin. should carry equal flow [illegible].

2) Each filter/demin. unit presents different flow restriction because the condition of their resin charges vary [illegible] i.e., they were renewed at different time intervals

3) Equipment

The equipment which comprises the flow balancing system consists of the following items.

a) Indicating flow controller (complete with pneumatic transmitter and orifice plate) for each Powdex vessel. The controllers have pneumatically adjustable setpoint and proportional-plus-reset mode of pneumatic control.

b) Control valve at the outlet of each Powdex unit. This valve is positioned by the signal from its respective flow controller.

c) A combination of high-signal selector relays connected so that the final output is that flow controller output which has the highest flow.

d) The master indicating controller - this controller has a manually-adjusted setpoint and proportional-plus-reset mode of pneumatic control. It measures the flow signal at the output of the high-signal selector relays. This is indication of valve position for the control valve which is widest open. The master controller maintains the set degree of valve opening by simultaneously adjusting the identical setpoints of the flow controllers. In actual fact, the master controller is controlling the output flow of that vessel flow controller with the greatest output.

4) Method of Operation

a) The master controller should have its control point set for the widest valve opening which is consistent with allowing the valve to maintain flow control. 80 percent opening appears to be a good starting point. Perhaps greater opening will be possible with good control. If the flow controller with greatest output shows difficulty in responding to a rise in setpoint, a lower setpoint should be used for the master controller.

b) With two or more Powdex vessels in service, the one with the greatest loss of filtered matter on its element will require the greatest degree of control valve opening. Other Powdex units will have their outlet valves open to a lesser degree to obtain the same flow rate.

c) The combination of high-signal selector relays transmit to the master controller the signal which indicates the signal level of the vessel flow controller with the highest output flow.

If this signal is below the setpoint of the master controller, the output of the master controller will increase. This output is connected as the setpoint signal of all the flow controllers for the Powdex vessels in service. Increasing the setpoint of the flow controllers causes their output flows to rise.

The over-all effect of the aforementioned action is to have the most exhausted powdex vessel with its control valve opened to the amount set upon the master controller, and the control valves for the less exhausted vessels throttled closed to some extent, to maintain an equal flow through all the vessels which are on stream.

d) As will be explained later, sometimes the initial change of vessel flow controller output is in the direction opposite to that called for by the plant load change. It is the function of the master controller to react faster to the flow controller to react faster to the flow controller output change than the flow controller acts to modify valve positions. The net effect is to modify flow controller setpoint to agree with the plant load, with negligible change of valve position.

The best controller mode settings can be established only through operating experience. Usually, when Graver Powdex systems are equipped with flow balancing, the controllers are started with the following settings:

Master Controller:

Proportional Band - 100%

Reset - 0.1 minutes per repeat
10 repeats per minute

Flow Controllers:

Proportional Band - 200%

Reset - 1.2 minute per repeat
5 repeats per minute

b) Plant Flow Decrease

When plant flow rate decreases, the vessel flow goes below the setpoint. This causes the beginning of an increase in controller output which is sensed by the master controller, which decreases its output to lower the setpoint of the vessel flow controllers to restore the desired output signal.

c) Increases Solids on Filter Elements

As the Powdex vessels progress through their service runs, the coating on the elements will provide increasing resistance to flow. This is a gradual, but unavoidable change.

For those vessels which are not the most exhausted, an increase in element resistance will cause the flow controllers to open the control valve enough to maintain flow at the setpoint.

Usually, it is the most exhausted vessel where the element resistance is building up the fastest. The control valve of this vessel is open wide as the flow balancing system allows. Therefore, the overall pressure loss from inlet header to outlet header will gradually increase. The plant feedwater control makes up for this, by performing the necessary action in the direction of increasing flow to counteract the increase of pressure loss across the Powdex systems. The result of these actions in the direction of flow increase (see section 5) a). above) is that the control valves of less-exhausted vessels will throttle slightly in order to maintain balance of flow with the most-exhausted vessel.

The overall increase of pressure loss through the Powdex system is limited simply by placing on the stream a freshly precoated vessel which has been standing by. Some systems allow partial opening of a bypass (see specific instructions for your installation). The exhausted vessel is then removed from service for re-coating, after which it is usually placed on standby.

8. Condensate Booster Pumps (Figure 1)

a. Purpose

1) Provides NPSH for Reactor Feedwater Pumps

b. Booster pump recirc. valve controlled automatically by flow controller at the discharge of the condensate pump.

1) Acts as minimum flow valve for; condensate pumps, condensate booster pumps, SJAE condensers, off gas condenser, and gland exhauster condenser.

c. Motor

1) 1750 horsepower, 4160 volt, 60 cycle, 3 phase

a) Pump 1A from 4160 V unit Board 1A

b) Pump 1B from 4160 V unit Board 1B

c) Pump 1C from 4160 V unit Board 1C

2) Journal Bearing

a) Force feed lubricated by Booster pump auxiliary oil system

3) Pump Trips

a) Electrical fault

b) Suction pressure <5 psig decreasing for 5 seconds

(1) Alarm at <15 psig decreasing

c) Bearing lube oil pressure <10 psig decreasing for 5 seconds

(1) <7 psig alarm and auto start (if associated booster pump running) of auxiliary oil pump

(a) Auxiliary oil pump should restore bearing lube oil pressure to greater than 10 psig before 5 second time delay has expired.

4) Pump Start Interlocks

a) Pump can be started or stopped locally (with push-buttons) or remotely in the control room.

b) Starting the pump from either switch initiates a 15 second timer and a 15 second timer.

(1) Auxiliary oil pump auto starts during the 25 seconds if not all ready running.

(2) If auxiliary oil pump is running, the 25 second timer is bypassed and the booster pump will auto start in 15 seconds if:

(a) Condensate booster pump suction pressure is $\geq$10 psig and;

(b) Booster pump bearing oil pressure is $\geq$7 psig.

d. Pumps

1) Centrifugal, 10,800 GPM/per pump, at 450 psig

2) 3 pumps are normally required for 100% operation, however, the pumps are rated such that 2 pumps at run out conditions will provide 92% condensate flow.

3) Mechanical Seals

a) Supplied by Running Pump

4) Radial and Thrust Bearing Force Feed Lubricated

e. Lubrication System - each condensate booster pump has its own lubricating oil system consisting of:

1) An Attached Main Oil Pump

a) Centrifugal pump discharge pressure ~35 psig

2) A 480 V electric motor driven centrifugal auxiliary oil pump

a) Discharge Pressure ~25 psig

b) Pump Starts

(1) Manual from local start stop switches

(2) Automatically if:

(a) The associated condensate booster pump is running and booster pump bearing oil pressure drops to _ psig or.

(b) The associated condensate booster pump is started or;

i. Time delay allows auxiliary oil pump to develop bearing oil pressure before condensate booster pump starts

(c) Any condensate pump is started and there are no condensate booster pumps running

c) Pump Stops

(1) Manual from Local Stop Switches

3) 15 gallon Oil Reservoir

4) Oil Cooler

a) Requires Raw Cooling Water

9. Feedwater Heaters and Drains

a. Purpose

1) Improves overall plant efficiency factor.

2) Provides path for moisture removal from turbine stages.

3) Three strings (A, B, and C) keeps tube velocity within limits and provides reasonable beater size.

b. Construction

1) "4" Low Pressure (LP) Heaters (Figure 5)

a) Horizontal U-tube heat exchanger with integral drain cooler section

(1) Drain cooler provides two functions:

(a) Raises feedwater temperature so less extraction steam required.

(b) Lowers (subcools) drains to prevent flashing in transit to next heater.

(2) Located inside neck of condenser shell see E.9.b.5) a) (6) for details.

c) Feedwater Flow Path

(1) Feedwater enters at the bottom of the heater, into a water box.

(2) A divider plate forces the feedwater into the stainless steel U-tubes.

(3) After passing through the tube sheet, the feedwater is first heated by the drain cooling section, cooling the drains.

(4) Upon leaving the drain cooler zone, the feedwater acts as a condensing mechanism for the extraction steam.

(5) Returning through the tube sheet, the feedwater exits at the top of the heater and flows into the "3" heater.

(6) Feedwater outlet temperature is ~239°F at full power.

c) Extraction Steam Flow Path (Figure 7)

(1) "4" heater extraction steam is taken from the tenth stage of the L.P. turbine and passes into the heater through two inlet ports (24" steam lines).

(a) Moisture from the turbine is carried with the extraction steam.

(b) The "4" heaters are continuously on whenever the turbine is running as the only valves in the extraction lines are mechanical check valves which prevent reverse flow.

(2) Impingement plates deflect the steam as it enters, forcing the steam to flow out and down over the cooling water tubes where it is condensed, transferring its heat to the feedwater.

(3) The condensed steam joins with the other extraction drains, flowing toward the drain cooler section.

d) Drain Flow Path (Figure 8)

1. Drains from the [illegible] heater enter near the U-tube bend and flow towards the feedwater inlet end. Some of the drains flash as they enter the heater.

(2) Condensed extraction steam joins the drains.

(3) When the combined drains reach the drain cooler section, they are sucked up into the cooler by a siphoning action, flow around a series of baffles and exit through the drains outlet to the flash tank.

(4) The level of drains inside the heater is normally maintained by controlling the amount of drain flow to the flash tank.

(5) The drain cooler section is completely filled with drains, acting as a water-to-water heat exchanger.

e) Air, together with fission products and other non-condesnible gases, enters with the extraction steam and cascaded drains.

(1) If these gases are not removed, increased corrosion could result. The heaters could also become air bound, decreasing heater efficiency.

(2) Removal of these non-condensibles is accomplished by air vent lines.

(a) Orificed vent lines provide continuous degassing to the main condenser.

(b) Nominal heat exchanger shell side pressure 2.7 psia.

2) "3" Low Pressure Heaters

a) Essentially the same as "4" heaters with the following exceptions:

(1) Heater drains come from "2" heaters and flow into (Figure 8) "4" heaters.

(2) Extraction steam comes from the 8th stage of the LP (Figure 7) turbine.

(a) Therefore, the "3" heaters operate at a different temperature and pressure than the "4" heaters.

i. Feedwater exit temperature to #2 heater 297°F (100 power)

ii. Nominal heat exchanger shell side pressure ~69.4 psig

(b) Valves in Extraction Line

i. Air operated extraction nonreturn line auto shuts on all turbine trips

ii. Motor operated extraction nonreturn line auto closes of cp heater string condensate iso. valves close.

(3) Heat exchangers located in heater bay of turbine building outside of main condenser shell

3) "2" High Pressure Heaters (Figure 6)

a) Vertical, U-tube heat exchanger with integral drain cooler section.

(1) Drain cooler provides same function as in "4' heater.

(2) Vertical heater installed due to space limitations and tube removal capability.

(3) Located in Heater Bay of Turbine Building

b) Feedwater Flow Path

(1) Feedwater enters the bottom of the heat exchanger, and flows upward through the tube side of the drain cooler section.

(2) Passing out of the drain cooler, the feedwater acts as a condensing mechanism for extraction steam.

(3) Returning through the tube sheet, feedwater exits at the bottom of the heater into the feedwater return header.

(4) Feedwater outlet temperature ~330°F at full power.

c) Extraction Steam Flow Path (Figure 7)

(1) Extraction steam and moisture from the L.P. turbine seventh stage enters the heater at the bottom and flows upward via a steam lane.

(2) Tube support plates direct steam onto the cooling water tubes.

(3) Condensed steam flows down the condensate lane and mixes with the moisture separator drains and the drains from the #1 heater drain cooler.

(4) Valves in Extraction Line

(a) Air operated extraction nonreturn line auto shut on all turbine trips

(b) Motor operated extraction nonreturn line auto close if L.P. heater string condensate isolation valves close.

d) Drain Flow Path (Figure 8)

(1) Drains from the moisture separator drain tank and from the #1 heater drain cooler enter through the drains inlet nozzle and mix with the extraction condensate.

(2) This mixture then flows downward and into a drain cooler section.

(3) Baffles in the drain cooler force the drains to take a circuitous route to the drains outlet.

(4) "2" heater drains cascade into the "3" heaters.

(5) A level control system maintains the drain cooler full by controlling the amount of drain flow to the "3" heater.

e) Air and non-condensibles are removed by vent lines.

(1) Nominal heat exchanger shell side pressure ~110 psia

2) "1" High Pressure Heaters

a) Essentially the same as "2" heaters with the following exceptions:

(1) There are no drains coming into these heat exchangers from a higher pressure heater.

(2) Extraction steam comes from cross around steam to the moisture separators.

(a) Therefore, the "1" heaters operate at a different temperature and pressure than the "2" heaters.

i. Feedwater exit temperature to the vessel ~377°F (100% power)

ii. Nominal heat exchanger shell side pressure ~200 psia

5) "5" Low Pressure Heaters

a) Essentially the same as 4 heaters with the following exceptions:

(1) There are no heater drains cascading into the "5" heaters.

(2) Extraction steam is taken from the twelfth stage of the L.P. turbine.

(a) Therefore, the "5" heater operates at lower temperatures and pressures.

(3) The "5" heater does not have an integral drain cooler. An external drain cooler provides this function. An internal drain cooler would have made the "5" heaters too big.

(4) The "5" heaters are always in service if the turbine is operating. There are no extraction valves.

(5) Since there are no cascading drains into the "5" heaters, the only drains are condensed extraction steam. These drains, along with uncondensed extraction steam, are piped to the flash tank.

(6) The 4, 5, heaters and drain coolers are located inside the neck of the condenser to save floor space and minimize piping runs.

(7) Feedwater outlet temperature 183°F at full power.

(8) Nominal heat exchanger shell side pressure [illegible] psia.

3) Flash Tank Operation (Figure 8)

a) All heater drains are combined in the flash tank and flow into the drain cooler.

b) Any drains which flash and any uncondensed steam from the "5" heaters is routed back to the "5" heater.

c) The drain cooler is a water-to-water heat exchanger which increases the temperature of the feedwater. Feedwater inlet temperature is ~103°F at full power. Feedwater outlet temperature is ~130°F at full power.

c. Operation of Heaters and Drains

1) Heater condensate drains flow from the highest pressure heaters towards the lowest pressure heaters, achieving a cascading effect (Figure 8).

2) Condensate drained from the moisture separator drain tanks is routed to the shell side of heater "2" by a separator drain tank level controller and moisture separator drain pumps. Condensate from heater "1" is also directed to heater "2" level controller.

3) The level controller for heater "2" drains condensate to heater "3". level controller for heater "3" drains condensate to heater "4" and level controller for heater "4" drains condensate to the flash tank.

4) Steam flashing from the condensate drained into the flash tank is routed to the shell side of heater "5".

5) The flash tank level controller drains condensate to the main hotwell by way of the "5" heater external drain cooler.

6) Extraction steam is required to force the drains from one heater to the next.

7) For satisfactory performance of feedwater heaters, the correct drain level must be maintained.

a) If the level is too high, heater efficiency will decrease and condensate may back up into the turbine.

b) If the level is too low, proper subcooling of the drains is lost.

(1) This causes flashing in the drain line to the downstream heater.

(a) Water hammer in the drain line and level oscillators in the downstream heater results.

Note: Flashing of drains will occur normally, but only after passing through the level control valve, where pressure is reduced.

8) Heater Level Control

a) The "3" heater arrangement is typical of the level control system.

b) Drains from the upstream "2" heater flow through a level control valve (LCV) into the "3" heater.

(1) This LCV is controlled by an air signal from the "2" heater level control system.

(2) If the "2" heater level changes, the LCV is opened to pass more or less condensate flow to maintain "2" heater level.

(3) Since "2" heater drains will flash after passing through the LCV, the valve is located very close to the "3" heater.

c) "3" heater drains flow through the "3" heater level control valve into the "4" heater.

(1) This LCV is controlled by an air signal from the "3" heater level control system.

(2) Level changes in the "3" heater are compensated by opening or closing the LCV.

(3) An emergency drain valve is provided in the event more drain capacity is needed on the drains from heaters 2, 4, the drain cooler, and the moisture separator drain tanks.

d) As an example of heater level control operation, assume a level increase in "2" heater.

(1) "2" heater LCV would open to decrease the level.

(2) If level continued to increase, "2" heater emergency drain valve would begin to open.

(3) If level reached the high level switch setpoint, the feedwater inlet and outlet valve of the affected high pressure feedwater string would close to isolate the leak.

(a) Closing the high pressure feedwater string isolation valves from the feedwater system causes the affected 1 and 2 heater motor operated extraction nonreturn valves to close isolating steam from the affected heater (See Systems Manual Figure 2.7-2 for Extraction Valves).

(b) The response to increasing level in heater "1" is much the same as heater "2" with the exception of the fact that heater "1" has no emergency drain valve.

(4) The end result is:

(a) "1" and "2" heater motor operated extraction nonreturn valve is closed and heater 2" extraction bypass is open (heater "1" has no extraction bypass valve).

(b) "2" heater LCV is full open.

(c) All "2" heater drains flow into main condenser via emergency drain valve or to =3 heater via LCV.

(d) Since one high pressure heater is isolated, the feedwater temperature leaving that heater string will be lowered.

(e) The inlet feedwater temperature to the vessel will also be slightly lower.

(f) Feedwater flow in the unaffected high pressure feedwater heaters will increase when the isolation occurs. This produces a larger Δt between feedwater temperature and extraction steam temperature, increasing the heat transfer across the remaining high pressure heater tubes.

(g) The remaining high pressure heaters will "work" harder (require more extraction steam) partially compensating for the loss of the high pressure heater string.

9) Remaining Level Control Features

a) Increasing level responses in heaters "3" and "4" are similar to 1 and 2 except the high level response isolates the affected low pressure feed water string to cause an isolation of the string and the heater "3" motor operated extraction nonreturn valves.

(1) There are no controllable extraction nonreturn valves on heaters "4" and "5".

(2) Heater "3" has no emergency drain valve.

b) Heater "5" affects its level control through the flash tank level controllers.

c) Flash tank level control affects a normal and emergency drain from the drain cooler.

d) Moisture separator drain tank high level effects:

(1) Level control valve to '2' heater first

(2) Emergency drain to main condenser second

(3) Turbine trip and air operated extraction nonreturn valve isolation on "1", "2" and "3" heaters third.

Revision _____

Date _____

BWR SYSTEM

LESSON PLAN

A. REACTOR WATER CLEANUP SYSTEM

B. REFERENCES

1. BWR Systems Manual Chapter 2.8
2. Brown's Ferry Reactor Water Cleanup System Process Instrumentation GEK - 34533.
3. Brown's Ferry Operation and Maintenance GEK - 779
4. Brown's Ferry Leak Detection System GEK - 32559
5. BFNP Flow Diagrams 47W810, 47W837
   BFNP Mechanical Control Diagram 47W610-69
   BFNP Mechanical Logic Diagram 47W611-69
6. BFNP Technical Specifications
7. Reference Card File 2.8

C. OBJECTIVES

1. The components of the system
2. Flow path through the system
3. Limitations on the system
4. System control and operation of the system

D. GENERAL DESCRIPTION

1. Purpose - The Reactor Water Cleanup System serves the following functions:

   a. Reduces impurities within the water and therefore reduces the deposition of impurities on the Fuel surface. (The concern of impurities is the resulting reduction in heat transfer from the Fuel.)

   b. Removal of excess water from the reactor to either the condenser hotwell or radwaste.

   c. Reduces the secondary sources of beta and gamma radiation by removing corrosion products, etc.

d. Control the concentration of fission products in the reactor primary system.

e. Maintains high reactor water purity to limit chemical and corrosive action.

2. System Description (Figure 1)

a. Provides continuous mechanical filtration and chemical demineralization of reactor water.

b. Components

1) Recirculation pumps (2)

2) Filter - Demineralizers (2)

3) Regenerative Heat Exchange (3)

4) Non-regenerative Heat Exchange (2)

5) Valves

a) Motor operated valves inside the containment.

b) Motor operated valves outside the containment.

c) Blowdown flow control valves.

3. Flow Path (Figure 1)

a. Suction - Taken from the "A" recirc loop suction line and the RPV bottom head drain (to monitor bottom head water temperature, to prevent temperature stratification in the bottom head which could cause thermal stresses in the RV bottom headand in the CRD stab tubes, and to remove crud from the bottom of the vessel). The suction point is common to the RHR - Shutdown Cooling mode.

b. Isolation valves - Inboard and outboard of the primary containment for the system inlet.

c. C/U Recirc Pumps - two 50% capacity pumps.

d. Heat Exchangers

1) Regenerative Heat Exchangers - 3.
(Reduce temperature from 532°F to 233°F)

2) Non-regenerative heat exchangers - 2 (Reduce temperature further from 233°F to 120°F)

e. Filter-demineralizers

1) Two (50% capacity) used to maintain reactor water purity.

Although the majority of the impurities are removed by the condensate demineralizers, the reactor acts as a concentrator of the remaining impurities. These are removed by the cleanup system filter-demineralizers.

2) Filter-demineralizer bypass line-100% capacity

f. Sample Stations

(Conductivity measured) before and after the filter demineralizers

g. Return through the Regenerative Heat Exchangers (temperature increased form 120°F to 434°F) to a thermal sleeve in the feedwater lines and into the RPV. Check valves on feedwater line provide containment isolation.

h. Blowdown path to main condenser or Radwaste.

i. Flow Control

1) Constant volumetric flow through the filter-demineralizers.

2) Flow control valve and controller for blowdown.

D. Basic Modes of Operation

a. Reactor power operation - normal water quality.

b. Startup - maintain water level during plant heatup.

c. Reactor blowdown operation - level control when not steaming.

d. Hot Standby

e. Refueling - reactor cavity water quality.

E. COMPONENT DESCRIPTION

1. Cleanup Recirculation Pumps

a. Provided to overcome ΔP of system line losses, pressure drops across system equipment and inject return water into the feedwater system.

b. Two - 50% capacity, horizontal, electric motor driven, centrifugal pumps with mechanical seals. Rated flow is 180 gpm each.

c. Pump design Data

Number Required	2
Capacity (Each)	50%
Discharge Flow (gpm/pump)	180
Design Temperature (°F)	575
Design Pressure (psig)	1450
Discharge Head at Rated Flow (ft)	500

d. Normal flows and temperatures

2 pumps, 2F/D units	1 pump, 1 F/D unit
270 gpm	135 gpm
Temp. from reactor	532°F
Temp. to Non-regex. HX	233°F
Temp. from Non-regen. HX	120°F
Temp. return to Reactor	434°F

e. Operated from the main control room

f. Pump bearing and seal cooling provided by RBCCW

g. Pumps designed to operate in parallel-system operation can continue at reduced flow with one pump out of service.

h. Auto trips

1) Inlet isolation valves (1 and/or 2) not full open

2) Outlet isolation valve (12) full closed

3) High bearing cooling water temperature $\geq$140°F

4) Low Recirc pump flow $\leq$ 30 gpm.

2. Heat Exchangers

a. Regenerative (RHX) heat exchangers

1) Used to reduce reactor water temperature to avoid excessive demand on the closed cooling water system and minimize heat losses from the reactor system.

2) Cooling medimum is cleanup system return flow to the reactor-shellside (thus improving the system heat cycle).

3) Design Data

Reactor Coolant Flow Rate (lb/hr)	133,300
Shell Side Pressure (psig)	1,450
Shell Side Temperature (°F)	575
Tube Side Pressure (psig)	1,450
Tube Side Temperature	575

4) Relief valves on shell and tube side provide overpressure protection.

b. Non-regenerative (NRHX) heat exchanger

1) Used to reduce reactor water temperature to tolerable levels for the resin material used in the filter-demineralizers.

2) Cooling medium is RBCCW (shellside)

3) Design data

Reactor Coolant Flow Rate (lb/hr)	133,300
Shell Side Pressure (psig)	150
Shell Side Temperature	370
Tube Side Pressure (psig)	1,450
Tube Side Temperature (°F).	575

4) Relief valve on tube side provides for heat exchanger isolation protection.

3. Filter - Demineralizers (Figure 2)

a. Used to maintain water purity by mechanical and chemical filtration. They remove insoluble solid particles and dissloved solids from the water.

b. Two - dual purposes, 50% capacity units of the pressure per coat type which use finely ground mixed ion exchange medium. The filer/demineralizers operate in parallel at 50% of the total system capacity.

c. The rapid ion exchange rates at the finely ground resin, requires the use of only a thin pre coat and facilitates greater utilization of the ultimate capacities of the resin. Powdex demineralizer resin is not regenerated. (Solka Floc is not always used under the powdex because powdex is usually a sufficient filtration medium alone - Brown's Ferry doesn't use Solka Floc.)

d. Design Data

Number Required	2
Capacity (each)	50%
Flow Rate/unit (lb/hr)	66,650
Effluent Conductivity (μmho max)	0.1
Effluent.	6.5 to 7.5
Effluent Insolubles (ppb)	≤10
Design Temperature (°F)	150
Design Pressure (psig)	1,450
Maximum expected time to remove a unit from service, backwash, pre coat, and return to service (minutes)	60

e. Internal construction

1) Fine Steel mesh Filter elements (septum) attached to a tube sheet.

2) Resin mixture (weight basis)

Cation : Anion = 2 : 1

f. Filter - Demineralizer effluent specifications

Conductivity	<0.1μmho/cm
pH	7.0 ± 0.5
Insolubles	<10ppb (residue on 0.045 Micron filter paper)

Chlorides

Influent	Effluent
200 - 1000ppb	80% removal
≤200ppb	90% removal

g. Maximum pressure drop (inlet to outlet nozzles)

Clean	5 psid
Dirty	20 psid
Alarm	25 psid
Automatic isolation + Alarm (effluent valve)	40 psid

h. Backwash and precoating required if:

1) F/D Differential pressure high : 20-25 psid

2) F/D Differential pressure low : 1 psid (indicative of possible failed filter element).

3) Effluent conductivity > 0.1 μmho/cm

a) Influent conductivity ≤ 0.1 μmho/cm @ 20°C
Effluent conductivity ≥ 0.1 μmho/cm @ 25°C

b) Influent conductivity >1.0 μmho/cm @ 25°C
Remove when DF's ≤ 3.0

pH	6.5 to 7.5
Insolubles	$\leq$10ppb
Silica	DF $\geq$ 1.0
Chlorides	$\leq$ 50 ppb
ΔP	20 psig

(Decontamination factor (DF) = influent value/effluent value)

c) During startup mode of operation conductivity may exceed 0.1 μmho/cm for short periods of time as long as the reactor vessel water quality remains within the limits defined in the technical specifications

i. Post Strainers

1) Provided to prevent carryover into the reactor system of filter or resin material due to filter element failure.

2) Designed to withstand shutoff head of the cleanup recirculation pumps.

3) Pressure drop

clean	<5
Alarm	20 psid
Automatic Isolation (F/D effluent valve)	20 psid

4) Post strainer backwashing required if differential pressure across it exceeds approximately 5 psid.

j. Backwash and precoating done from local panel.

1) Automatic or manual sequencing

2) Interlocks allow only one filter demineralizer to be recoated at a time.

3) Holding pump

a) Provided to maintain the filter charge until the unit is in service.

b) Pump will auto start if flow through the filter drops to ~ 0.8 gpm/ft toprevent the precoat from dropping off the Filter elements.

4) Elapsed time (expected maximum) - to remove unit from service, backwash, precoat and return to service - 60 minutes.

k. Flow Control Valve

1) Maintains constant flow rate through each filter-demineralizer for varying pressure drops.

2) Set at a local filter - demineralizer control station.

3) Normal Flow is 135 gpm

4. Valves

a. Inboard and outboard system inlet valves are part of the PCIS. The primary purpose of system isolation valves is to prevent uncovering the core and limit the radiological dose if the cleanup pipe breaks.

b. All valves are AC powered except the system suction outboard valve (#2 valve) which is 250 VDC.

c. Flow-control valve to radwaste/main condenser (#15 valve)

1) Resrticting orifice upstream prevents excessive blowdown in the event theFCV fails open. Bypassed for low pressure conditions.

2) Upstream pressure switch closes FCV on low pressure to prevent draining the entire RWCU system piping in a siphon action to the main condenser or radwaste.

3) Downstream pressure switch closes FCV on high pressure to protect the downstream low pressure piping.

F. INSTRUMENTATION

1. Control Room Instruments

a. Flow indicators

1) Cleanup return flow to main condenser or radwaste 0-300 gpm

2) Filter Demineralizer "A" flow 0-150 gpm

3) Filter Demineralizer "B" flow 0-150 gpm

b. Pressure indicator, Regen. HX inlet 0-1500 psig

c. Temperature Indicators (1 indicator with selector switch) 0-600°F

1) Reactor water (inlet to RHX, tube side)

2) Regen. Heat Exchange outlet (tube side)

3) Non-Regen. Heat exchanger Outlet (tube side)

4) Return to feedwater line

d. Conductivity recorders

1) Reactor Water Cleanup before Demin "A" and "B"
(1 pen recorder) 1-10 microm hos/cm

2) Reactor Water Cleanup after Demin "A" and "B"
(2 pen recorder) 0-1 microm hos/cm
Red - Demineralizer "A"
Black - Demineralizer "B"

2. Sample Station

a. Samples taken at outlet of each filter-demineralizer.

b. Pressure control valves reduce system pressure for use in the sample station. Capable of maintaining continuous flow through each sample point at any cleanup system operating temperature.

c. Constant temperature for the sampled process fluid.

d. Sample is discharged to clean radwaste.

e. Also sample influent header to filter demineralizers. Difference between influent and effluent will determine the filter/demineralizer efficiency.

3. Significant Alarms, Interlocks, and Trip logic

a. System isolation on the following (closure of inboard and outboard inlet isolation valves (#1 and #2) and the return isolation valve (#12))

1) Low reactor water level -10"

2) High Temperature outlet non-regenerative heat exchange 130°F (Alarm also)

3) Standby Liquid Control initiated

4) High temperature in areas occupied by cleanup system equipment 110-120°F

5) High temperature in floordrains in areas occupied by cleanup system equipment 110-120°F

b. Recirculation pump trips

1) Inlet Isolation valve (#1) not fully open.

2) Inlet Isolation valve (#2) not fully open.

3) Reactor return isolation valve (#12) fully closed.

4) Pump flow low $\leq$30 gpm (5sec TD on startup)

5) Pump cooling water outlet High temperature (RBCCW) 140°F.

c. Filter Demineralizers

1) Flow (Local)

a) Alarm on low flow

b) Holding pump auto starts at ~0.8 gpm/ft^2

2) Differential pressure (Local)

a) Filter-Demineralizer

(1) Alarm on high differential pressure @ 25 psid

(2) Closed F/D effluent valve @ 20 psid

3) Conductivity

a) Alarm on F/D inlet conductivity @ micro mho/cm

b) Alarm on F/D unit outlet conductivity @ 0.1 mirco mho/cm

d. Blowdown (Local)

1) Alarm and closure of drain flow control valve @ 5 psig.

2) Alarm and closure of drain flow control valve @ 140 psig.

4. Leakage Isolation

a. 8 thermocouples (RTD) located near Cleanup system equipment to monitor the area temperature.

1) Alarm on Panel 9-3 on high temperature ~~110° - 120°F~~ 170° - [illegible] F

2) Isolate cleanup system at ~~110°-120°~~ 170°-165°F

b. 8 temperature switches located in floor drains serving cleanup system equipment. Isolate cleanup system 110°-120°F

G. OPERATIONAL SUMMARY

1. Modes of Cleanup System Operation

a. Reactor Power Operation - Normal

1) Design basis for the sizing of the Regenerative heat exchanger and main pump discharge piping.

2) Equipment Status

Main pumps operating

RHX under full load

NRHX under partial load

Filter-demineralizers operating

No blowdown

b. Startup Operations

1) During plant Startup and heatup at a maximum rate of 100°F per hour, the reactor water volume will "swell." Additional water will be introduced to the reactor from the control rod drive system flow to the reactor. To accomodate this increase in vessel water inventory, the cleanup system is used to discharge reactor water to the main condenser or radwaste.

2) The system drain line restricting orifice bypass valve is open at low reactor pressures.

3) The blowdown rate is limited by the Following factors: Filter-demineralizer inlet water temperature, RBCCW return temperature and heat exchanger cooling water flow rate.

4) The cleanup system removes control rod drive water and "swell" water from the reactor until reactor temperature reaches ~100°F above the saturation temperature for themain turbine seal setpoint pressure; at which time this water will be removed as steam by blowdown to the main condenser.

5) Equipment Status

Main pumps in operation

RHX under partial load

NRHX under maximum startup load

Filter-demineralizers in service

CRD input and system expansion discharged to radwaste or main condenser.

c. Blowdown Operations

1) Design basis for sizing the blowdown line restricting orifice and flow control valve.

2) Cold blowdown

a) Can blowdown up to the capacity of the drain FCV to radwaste or the condenser.

b) Equipment Status

Main pumps in operation

Heat exchangers under little load

Filter-demineralizers in operation

Drain FCV in operation

3) Hot blowdown

a) The system will have a restricted flow rate because of the limitations on the maximum allowable outlet temperature to RBCCW on the shell side of the NRHX and the filter-demineralizer inlet water temperature.

b) If blowdown is in progress with the moderator at 545°F with no flow returning to the reactor, System Flow rate must be limited to within the cooling capacity of the NRHX.

c) The percent of total system flow blowdown must be adjusted to stay within the temperature limitations on the F/D and on the NRHX RBCCW outlet - if the total system flow must be adjusted to operated within the temperature limitations.

d) Equipment Status

Main pump (s) operating

RHX under no load (entire flow to radwaste/condenser)

NRHX under full load

Drain FCV in operation

4) Blowdown to main condenser is the preferred point to limit the duty on the liquid waste processing facilities.

d. Hot Standby

1) Same as Hot blowdown above

2) Minimum NPSH for pumps

e. Refueling Operations

1) Maximum bypass

a) Can be used to blowdown refueling (reactor) water, thus with blowdown mode, this operation shall also govern the blowdown flow control valve sizing.

b) Equipment Status

Both main pumps operating

RHX under no load

NRHX under no load

Filter-demineralizers in operation

Drain FCV in operation

Entire flow discharge to radwaste or main condenser

2) Refuel mode

a) In conjunction with fuel pool cooling and cleanup provides continuous cleaning of reactor water during refueling.

b) The system may be used to assist in heat removal if required.

c) Equipment Status

Main pumps in operation

RHX under no load

NRHX under no load

Filter-demineralizers in operation

FCV operational - No blowdown

2. Filter - Demineralizer Basis Operation

a. Filter-demineralizer

1) Two 50 percent capacity, parallel-operated filter-demineralizer units are provided.

2) They are pressure precoat type using finely ground, non-regenerable, mixed cation and anion ion exchange resins.

b. Service Cycles

1) The operating service cycle of a filter-cemineralizer is terminated either by a high pressure drop across the unit or by exhaustion of the ion exchange resins. Normally, pressure drop limits the run length except during an abnormal condenser leak.

2) When an operating unit's service cycle is terminated, the unit is isolated by closure of the outlet valves whil the parallel unit remains in service.

c. Backwash

1) The out - of - service filter-demineralizer is backwashed with air and water to remove all of the spent resins and accumulated insoluble material. This is accomplished with the use of an air blast injected into the filter-cemineralizer to dislodge the precoat. Condensate is then pumped into the filter-demineralizer through the outlet

line. The backwashing process efficiently removes these materials with a minimum volume of water from the condensate system.

2) Backwash water drains to the cleanup backwash receiving tank. Vent lines from the filter-demineralizer are routed to the backwash receiving tank.

3) The mixture of water and spent resins is pumped to the cleanup phase separator tank of the radwaste system.

d. Precoating

1) After the backwashing step, the filter-demineralizer is precoated by circulating a slurry of freshly prepared, finely ground, mixed resins from the precoat tank onto the stainless steel holding elements (septum).

2) The slurry deposits evenly on the elements while the water returns to the precoat tank. Recirculation is continued until the return water is clear.

3) A holding pump is started which will maintain the filter-demineralizer cake in place, after which the precoat pump is removed from service and associated valving is closed.

4) The unit is then ready to be placed in service by opening the inlet and outlet valves, after which the holding pump is removed from service automatically as flow increases.

5) The holding pump for each filter-demineralizer unit is automatically restarted if the filter/demineralizer outlet flow drops below 25 gpm. This insures a flow through the filter/demineralizer at all times and prevents the precoat from falling off the element.

H. RELATIONSHIPS WITH OTHER SYSTEMS

1. Reactor Building Closed Cooling Water System which supplies cooling water to the non-regenerative heat exchangers and RWCU recirculation pumps.

2. Primary Containment Isolation System which provides for automatic closure of the RWCU system isolation valves.

3. Radwaste facilities which are used to collect water from the RWCU blowdown and spent resins from the filter-demineralizers.

4. The "A" recirculation loop and the reactor vessel which supply water to the RWCU system.

5. Feedwater line which supplies a return path to the vessel for the processed water.

6. The Area Leak Detection System which provides an isolation signal for the RWCU.

7. Standby Liquid Control System which causes isolation of the RWCU upon its initiation.

I. TECHNICAL SPECIFICATIONS

1. Coolant Chemistry - Limiting Conditions for Operation

a. Prior to startup and at Steaming rates less than 100,00 lb/hr the following limits shall apply

1) Conductivity - 2.0 micro mho/cm @ 25°C.

2) Chloride 0.1 ppm

b. At Steaming rates greater than 100,000 lb/hr, the following limits shall apply

1) Conductivity 1.0 micro mho/cm @ 25°C.

2) Chloride 0.2 ppm

c. At Steaming rates greater than 100,000 lb/hr, the reactor water quality may exceed the above specification only for the time limits specified below. Exceeding those time limits of the following maximum quality limits shall be cause for placing the reactor in the cold shutdown condition.

1) Conductivity time above 1 micro mho/cm @ 25°C.
2 weeks/year
Maximum Limit 10 micro mho/cm @ 25°C.

2) Chloride concentration time above 0.2 ppm - 2 weeks/year
Maximum Limit 0.5 ppm.

3) The reactor shall be shutdown if pH < 5.6 or >8.6 for a 24 hour period.

d. When the reactor is not pressurized except during startup, the reactor water shall be maintained within the following limits.

1) Conductivity - 10 micro mho/cm @ 25°C.

2) Chloride - 0.5 ppm

3) pH shall be between 5.3 and 8.6

e. When the time limits or maximum conductivity or chloride concentration limits are exceeded, an orderly shutdown shall be initiated immediately. The reactor shall be brought to the cold shutdown condition as rapidly as cooldown rate permits.

f. Whenever the reactor is critical, the limits on acitivity concentrations in the reactor coolant shall not exceed the equilibrinm valve of 3.2 μCi/gm of dose equivalent I-131.

This limit may be exceeded following power transients for a maximum of 48 hours. During this acitivity transient the iodine concentrations shall not exceed 26 μCi/gm whenever the reactor is critical. The reactor shall not be operated more than 5 percent of its yearly power operation under this exception for the equilibrinm activity limits. If the iodine concentration in the coolantexceeds 26 μCi/gm, the reactor shall be shutdown, and the steam line isolation valves shall be closed immediately.

2. Coolant Chemistry - Surveillance Requirements

a. Reactor coolant shall be continuoly monitored for conductivity.

1) Whenever the continuous conductivity monitor is inoperable and the condensate demineralizers are bypassed, a sample of reactor coolant shall be analyzed for conductivity every 4 hours. If the condensate demineralizers are in service, a sample of reactor coolant shall be analyzed for conductivity every 8 hours.

2) Once a week the continous monitor shall be checked with an in-line flow cell. This in-line conductivity calibration shall be performed ever 24 hours whenever the reactor coolant conductivity is $\geq$1.0 micro mho/cm @ 25°C.

b. During Startup prior to pressurizing the reactor above atmospheric pressure, measurements of reactor water quality shall be performed to show conformance with I.1.s above

c. Whenever the reactor is operating (including hot Standby conditions) measurements of reactor water quality shall be performed according to the following schedule:

1) Chloride ion content shall be measured at least once every 96 hours.

2) Chloride ion content shall be measured at least every 8 hours whenever reactor conductivity is >1.0 micro mho/cm @ 25°C

3) A sample of primary coolant shall be measured for pH at least once every 8 hours whenever the reactor coolant conductivity is >1.0 micro mho/cm @ 25°C.

d. Whenever the reactor is not pressurized, a sample of the reactor coolant shall be analyzed at least every 96 hours for chloride ion content and pH.

e. During equilibrium power operation on isotopic analysis, including quantitative measurements for at least I-131, I-132, I-133, and I-134 shall be performed monthly on a coolant liquid sample.

f. Additional coolant samples shall be taken whenever the reactor activity exceeds one percent of the equilibrium concentration specified in I.1.f above and one of the following conditions are met:

1) During Startup

2) Following a significant power change (a change exceeding 15% of rated power in less than 1 hour).

3) Following an increase in the off-gas level exceeding 10,000 μCi/sec (at the SJAE) within a 48 hour period.

4) Whenever the equilibrium iodine limit specified in I.1.f is exceeded the addition coolant liquid samples shall be taken at 4 hour intervals for 48 hours, or until a stable iodine concentration below the limiting value (3.2 μCi/gm) is established. However, at least 3 consecutive samples shall be taken in all cases. An isotopic analysis shall be performed for each sample, and quan titative measurements made to determine the dose equivalent I-131 concentration. If the total iodine activity of the sample is below 0.32 μCi/gm, an isotopic analysis to determine equivalent I-131 is not required.

3. Coolant Chemistry Limits Bases

a. The reactor chemistry limits are established to prevent damage to the materials in the primary system which are primarily 304 stainless steel and Zircaloy cladding.

b. The limit on chloride concentration is to prevent stress corrosion craking of the stainless steel. For stress corrosion cracking to occur, chlorides and oxygen must be present. The lower the oxygen concentration, the higher the chloride concentration can be before stress corrosion cracking will occur. Boiling within the reactor results in degeneration of the reactor water. During steaming operation of <100,000 lbs/hr and during startup, there is not much degeneration taking place and the dissolved oxygen content of the cooling water may be high. Therefore, to assure that no stress corrosion cracking takes place, a more stringent limit is placed on chloride concentration under these low steaming conditions.

c. When conductivity is in its proper range, pH and chloride and other impurities affecting conductivity will be within limits. When conductivity becomes abnormal, then chloride measurements are made to determine whether or not they are also out of their normal operating valves. Significant changes in conductivity provide the operator with a warning mechanism so he can investigate.

d. The major benefit of cold shutdown is to reduce the temperature dependent corrosion rates and provide time for the cleanup system to re-establish the purity of the reactor coolant.

e. The equilibrium coolant iodine activity limit represents a computed dose to the thyroid of 36 rem at the exclusion distance during the 2 hour period following a steam line break.

f. The maximum activity limit during a short term transient is established from consideration of a maximum iodine inhalation dose less than 300 rem.

NOTE: Vendor fuel worranties also contain coolant chemistry limits which may be more strigent than the Tecnnical Specifications.

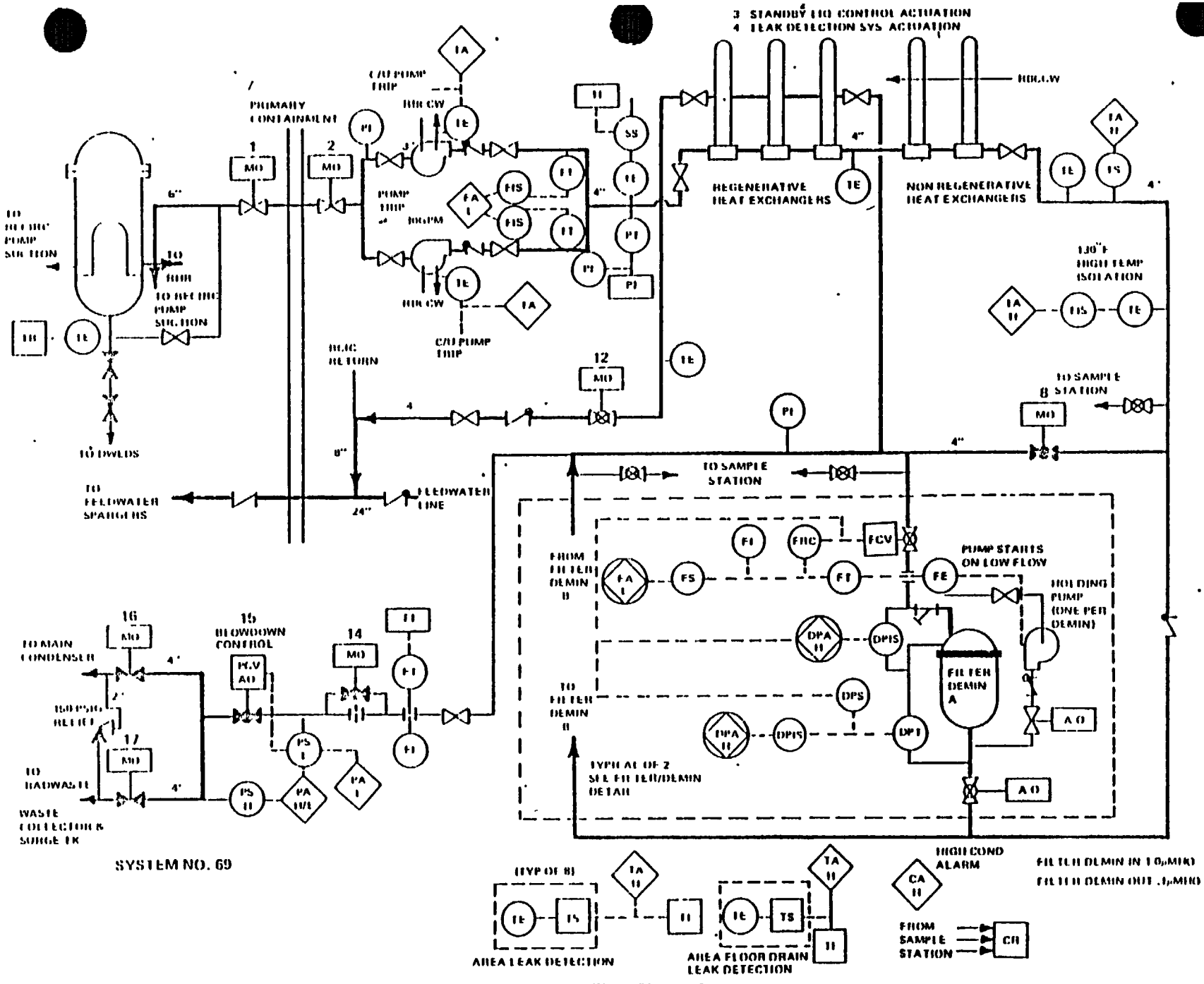

FIGURE 1. Reactor Water Cleanup System

Revision _____

Date _____

BWR SYSTEMS

LESSON PLAN

A. FEEDWATER LEVEL CONTROL SYSTEM

B. REFERENCES

1. BWR Systems Manual, Chapter 3.1
2. GEK 32550 - Feedwater Control System - Brown's Ferry
3. System Discussion 7.6 - Reactor Feed Pump and Turbine Drive - Peach Bottom
4. System Description 32-2 - Feedwater Control System and Feed Pump Turbine - Brunswick
5. GEK 779 - Volume 10 - Instruction Manuals for Vendor Supplied Equipment - Brown's Ferry
6. Operating Instruction 3 - Reactor Feedwater System - Brown's Ferry
7. System Diagrams - Brown's Ferry
   a. 47N610 - 46 - Mechanical Control Diagram
   b. 47N611 - 3. -46 - Mechanical Logic Diagrams
   c. 45N612 - RFP Schematic Diagrams
8. Card File - 3.1

C. OBJECTIVES

1. Understand how system controls reactor water level during both steady state and transient conditions.
2. Learn various modes of operation and when each is employed.
3. Learn significant system instrumentation and interlocks.
4. Know relationships between the level control system and other systems.
5. Be able to describe system response to instrumentation failures.

D. DESCRIPTION

1. Function

a. Automatically controls the flow of feedwater into the reactor vessel to maintain vessel water level within pre-determined levels during all modes of plant operation.

1) Required Levels Determined by:

a) Requirement of Steam Separators

(1) Limits Carryover and Carryunder

(a) Carryover is inefficient removal of moisture resulting from high vessel level. May damage turbine blading.

(b) Carryunder is caused by low water level allowing uncovering of separator skirt. Steam from the separators is entrained in the downcomer flow and may cause decreased core subcooling and/or jet pump or recirc pump cavitation.

b) Prevent Uncovering the Core.

2. Modes of Operation

a. Manual

1) Valve Control - used from 0 psig to approximately 350 psig.

2) Pump Control - used from 350 psig to approximately 10% power.

b. Single Element - Automatic Mode

1) Level Control Only. Only automatic mode available to bypass valve, also available for RFP Auto-Controls.

c. Three Elements - Automatic Mode

1) Level, steam flow, feed flow. Anticipates level change due to steam flow-feed flow mismatch.

2) Usually in operation between 10% and 100% power.

3) Only available for RFP Controls.

3. Components (Figure 1)

a. Startup Bypass Valve

1) Controlled by air signal from an electropneumatic (E/P) converter.

2) Operates on level control only for automatic operation.

3) Varying position of valve(s) changes feedwater flow which in turn changes reactor water level.

b. Turbine Driven Reactor Feedwater Pumps

1) Controlled by Hydraulic System which positions turbine control valves.

2) Hydraulics System controlled by FWCS to vary pump speed, controlling rate of feedwater flow.

c. Manual/Auto (M/A) Transfer Stations

1) One for each RFP turbine

2) Provides a manual demand signal to the turbine speed controls, or

3) Provides automatic control signals from the master controller to the turbine speed controls.

d. Master Controllers

1) Provides electrical control signal to the M/A stations; either manual or automatic (automatic described below).

2) Operator adjusts desired operating level with setpoint tape.

3) Controller compares desired level to actual level if in single element control.

a) If they are not the same, controller output will vary to correct the error.

4) Controller compares desired level to modified level signal if in 3 element control.

a) Steam Flow - feed flow mismatch signal provides anticipatory level change feature even though actual level may not have changed.

b) If desired level and modified level signals are not the same, controller output will change to correct the error.

5) Bypass valve levels controller is level control only.

a) Controller compares actual level to desired level.

(1) If they are not the same, controller output will vary until the error is corrected.

e. Vessel Level vs Flow Error Network

1) Modifies level signal based on steam flow - feed flow condition.

a) If steam flow and feed flow are equivalent, modified signal will correspond to actual level signal.

b) If steam flow exceeds feed flow, the modified signal will be less than the actual level signal.

c) If feed flow exceeds steam flow, the modified signal will be greater than the actual level signal.

f. Steam Flow - Feed Flow Comparator

1) Compares total steam flow to total feedwater flow.

2) If they are the same, comparator output is some constant amount.

3) If steam flow exceeds feed flow, comparator output will increase.

4) If feed flow exceeds steam flow, comparator output will decrease.

g. Reactor Vessel Level Instruments

1) Two level transmitters are available via a selector switch, a third transmitter is also used for turbine trip logic.

2) Each level instrument is pressure (density) compensated.

h. Feedwater Flow Instruments

1) The two feedwater flow signals are sent to a summing network for a total feed flow signal.

2) Feedwater flow signals are density compensated.

i. Steam Flow Instrument

1) All four steam flow signals are sent to a summing network for a total steam flow signal.

2) Each flow signal is pressure (density) compensated.

E. COMPONENT DESCRIPTION

1. Reactor Water Level (Figure 2)

a. 3 Independent Sensors - differential pressure transmitters connected to water reference condensing chambers within the drywell. 1 of 2 is selected to be used in the feedwater control circuitry.

b. Transmitter outputs 10-50 ma, corresponding to a level range of 0-60 inches (from inst. zero) is indicated in the control room.

c. Pressure compensated to correct for water density changes (level described by differential pressure is related to a family of curves whose zero points and slope changes with pressure). Pressure signal is applied to a level correction amplifier for proper compensation and indicated in the control room.

d. Level is also indicated on 1 pen of a two pen recorder.

1) Whichever channel is selected as input to the level control system is also the channel recorded.

2) Vessel high and low level alarms from the level selected.

3) Level interlocks and computer inputs are from the level channel selected.

2. Vessel Steam Flow (Figure 3)

a. Four steam flow ΔP transmitters send signals via square root converters to individual steam flow meters in the control room.

b. Pressure Compensation

1) 2nd input to square root converter is pressure from the primary (high) tap of the differential pressure transmitter. This signal is used to correct for changes in steam density as a function of pressure.

c. All four signals summed by total steam flow summer.

d. Total steam flow signal serves as input to:

1) Level Program Limiter

2) Steam Flow - Feed Flow Error Network

3) Control Room Total Steam Flow recorder.

4) RWM Bypass Control

3. Feedwater Flow (Figure 4): Consisting of 2 individual flow ΔP transmitters.

a. Each flow signal displayed on CR meters.

b. Both signals summed by feedwater flow summer.

c. Total feedwater flow signal serves as input to:

1) Steam Flow-Feed Flow Error Network

2) CR Feed Flow Integrator

3) CR Feed Flow Recorder

4) Recirc Pump NPSH Interlock

5) RWM

d. Temperature Compensation - density changes in feedwater corrected in a multiplier/divider unit.

e. Flow elements are located beyond the last H.P. heater to eliminate all leakage sources or flow recirculation following final feedwater flow measurement.

4. Feedwater Regulating Startup Bypass Valve Control (Figure 5)

a. Operation

1) The bypass valve disc position is controlled by a valve operator.

2) Increasing the air pressure applied to the top of the valve diaphragm closes the valve against spring pressure.

3) Bleeding off the air pressure allows the valve to open.

4) The air pressure is controlled by a positioner, which in turn is controlled by a small (3 - 15#) air signal from the I/P converter.

5) The I/P converter output is changed by varying the valve controller output signal.

6) The positioner output pressure passes through an air lock valve.

7) Low instrument air supply pressure (<65#) will cause the spring loaded air lock valve to close.

8) This interrupts the positioner signal and "locks" the air in the valve operator.

9) The valve will not move until sufficient supply pressure is available to open the air lock valve.

Note: If the positioner is demanding a full open valve when air pressure is regained, the valve will open rapidly (unless already open).

5. Reactor Feed Pump Turbine Controls (Figure 6)

a. Turbine speed is determined by the position of the primary pilot valve bushing.

1) The primary pilot valve bushing is set by an electric/hydraulic positioner - the pressure relay piston.

2) The pressure relay piston is controlled by one of two speed changers - the Motor Gear Unit (MGU) or Motor Speed Changer (MSC).

3) The MGU can control turbine speed from ~2000 to ~5500 RPM and is controlled by the feedwater control system.

4) The MSC can control turbine speed from 0 to ~5500 RPM and is manually controlled from the control room at either a high or a low speed change.

5) The linkage arrangement which positions the primary pilot valve busing is a low value selector, so that the lowest demand signal from the MSC or MGU will be in control.

6) The turbine speed governor positions the primary pilot valve within its bushing, supplying hydraulic pressure to the primary piston. The reset relay provides feedback to the primary pilot valve bushing for stable operation.

7) The primary piston controls the secondary operating cylinder which positions the turbine control valves.

8) The turbine control valves (5 low pressure and one high pressure) are sequentially opened by lift rods and a lift beam to admit steam to the turbine. The lift rods are positioned by the secondary operating cylinder and are arrange to: 1) Sequentially open the low pressure valves via the lift beam and 2) open the high pressure valve after the last low pressure valve has opened beyond its effective flow area.

6. In order to understand the electrical portion of the control system, it is necessary to discuss General Electric Measurement and Control (GE/MAC) devices.

a. Each device in a GE/MAC control system has an input and output.

b. A full range deflection of the input signal produces an output ranging from 10-50 milliamps (ma).

1) Maintaining a 10 ma minimum output allows detection of an electrical failure in the device.

2) A minimum input signal produces a 10 ma output.

3) A maximum input signal produces a 50 ma output.

c. For example:

1) The reactor vessel level instrument operates on a ΔP signal representing 0 - 60" of level.

2) A transducer converts the 0 - 60" ΔP signal into a 10 - 50 ma output signal.

3) If the reactor water level is 0" (or less), the transducer output is 10 ma.

4) If the water level is 33", the transducer output is 32 ma ($\frac{33}{60}$ x 40 ma + 10 ma).

5) If the water level is 60" (or greater), the transducer output is 50 ma.

6) Since a 60" level input change produces a 40 ma output change, every 3" level change causes a 2 ma output change.

d. When two different signals are compared, such as steam and feed flow, mismatches between them may be either positive or negative, i.e.,: steam flow may exceed feed flow (positive) or feed flow may exceed steam flow (negative).

e. To allow positive and negative signals in a device whose output is always a positive current (10 - 50 ma), biasing is employed.

f. The bias signal acts as a reference point. Any output greater than the normal bias signal is considered positive. Any output less than the bias signal is considered negative.

g. For example: (Figure 7)

1) The steam flow vs. feed flow comparator utilizes a summing device to determine if a flow mismatch exists.

2) Feed Flow Equals Steam Flow

a) If steam flow and feed flow are equal, the first summer output is zero.

b) The amplifier output is zero.

c) The second summer adds the amplifier output and a bias signal.

d) The bias signal is 32 ma (normally).

e) Comparator output is 32 ma.

3) Feed Flow Exceeds Steam Flow

a) The first summer output would be negative.

b) This error signal is amplified and sent to the second summer.

c) The negative error signal and the 32 ma bias are added, resulting in a comparator output of <32 ma, which is considered a negative output.

4) Steam Flow Exceeds Feed Flow

a) The first summer output would be positive.

b) This error signal is amplified and sent to the second summer.

c) The positive error signal and the 32 ma bias are added, resulting in a comparator output of >32 ma which is considered a positive output.

h. The master level controller is an integrating amplifier. (Figure 8)

1) The reactor level (or modified reactor level) is compared to a desired level as determined by a setpoint adjust tape.

2) If they are different, an error signal is generated and sent to the integrator.

3) The integrator response is shown in Figure 9.

a) A positive error signal into the integrator will cause integrator output to increase until the error signal is cancelled.

b) A negative error signal into the integrator will cause integrator output to decrease until the error signal is cancelled.

c) In the absence of any error signal, integrator output remains constant.

4) As shown in Figure 10, provision is made for a programmable level.

a) The need for level program is determined during startup testing.

b) If used, the program will decrease the operating level at ~-.2"/% rated steam flow; designed to reduce moisture carryover to the main turbine.

c) The program will only be used at power levels above programming limiter setpoint.

d) If installed on currently operating plants, the amplifier modifies at 0"/% rated steam flow with the limiter set at 0% steam flow. (Design for use with BWR/6 systems.)

7. Operation of Feedwater Control System

a. Normal Operation (Figure 11)

1) Manual/Auto (M/A) Transfer Stations

a) Manual Position

(1) The input signal from the master controller is removed from the circuit.

(2) Control is from manual control potentiometer.

b) Auto Position

(1) The output of the master controller is passed directly through the M/A transfer station to the function generator and I/P converters.

(2) The manual control potentiometer is disconnected from the circuit.

c) Balance Position

(1) Exactly the same as automatic insofar as control is concerned.

2) Master Controller and Valve Level Controller

a) Manual Position

(1) The output of the master controller is the signal from the manual control potentiometer.

(2) The level error signal is disconnected from the output of the controller.

b) Auto Position

(1) The output is a signal proportional to desired feedwater flow.

c) Balance Position

(1) Same as auto insofar as control is concerned.

3) RFP Turbine Controls

a) During normal operation, the MSC is placed at its High Speed Stops so that the FWCS can control the MGU over its entire speed range.

4) Single Element Control

a) A level signal is compared to a desired setpoint in the master controller or valve level controller.

b) If they are the same, the signals cancel each other and no error exists at the input to the integrator.

c) If there is no error signal, the integrator output is constant.

d) The magnitude of the integrator output is dependent upon the feedwater flow demand.

e) For example, assume the following plant conditions: (Bypass Valve Operation Illustrated)

The plant is starting up.
Very little steam flow is required.
The CRD system flow is exactly balancing steam demand.
Reactor water level is stable at 33".
Setpoint tape is demanding 0(33").
The valve level controller is in auto.

(1) A 33" level signal is represented by a 32 ma input signal to the master controller summer.

(2) This is exactly balanced by the setpoint tape input of 32 ma.

(3) The output of the summer is zero.

(4) The integrator output is at the minimum value of 10 ma.

(5) 10 ma is applied to the I/P converters, telling the regulating valve to stay closed.

f) Now assume these conditions:

The plant is still starting up.
CRD reject flow is adjusted greater than CRD flow.
Reactor water level has begun to decrease.
Setpoint tape is demanding 0(33").
Valve level controller is in auto.

(1) As soon as level begins to decrease, a positive error signal is generated by the summer.

(2) The integrator output begins to ramp upward.

(3) The increased output causes the feedwater regulating bypass valve to open.

(4) Opening the feedwater bypass valve causes an increase in feed flow and reactor level returns to normal.

(5) When reactor level returns to normal, the error signal no longer exists.

(6) With no error signal, the integrator output stops ramping upward and stabilizes at some new positive value.

(7) The final result: Steam flow and feed flow are increased. Reactor level is at 33". Integrator output is >10 ma and the feedwater regulating bypass valve is open slightly.

4) Three Element Control (Figure 11) (Master Controller Operation Only)

a) Steady State Operation

(1) Total steam flow is compared to total feed flow.

(2) At steady state, they are equal and no error signal is generated.

(3) Comparator output is the bias signal (32 ma).

(4) This signal is compared to reactor level.

(5) Normal 33" water level produces 32 ma.

(6) Since both inputsignals are 30 ma, no error signal is generated or amplified.

(7) Level vs. flow error network output is the bias (32 ma).

(8) With the level control mode switch in 3 element control, the 32 ma is sent to the master controller.

(9) It is compared to the desired level as determined by the setpoint tape and any error is sent to the integrator.

(10) At steady state, actual level and desired level are normally both 33" (32 ma), therefore no error signal is generated.

(11) Integrator output will remain constant unless an error signal is sensed on the input.

(12) If integrator output is constant, feedwater pump turbine speed is constant.

b) Steam Flow Exceeds Feed Flow

1) This condition generates a positive error signal in the comparator.

(2) The error signal is amplified and summed with the 32 ma bias signal, resulting in a signal >32 ma.

(3) The level vs. flow error network compares this signal to the 32 ma level signal.

(4) A negative error is generated, amplified and summed with the 32 ma bias signal, resulting in an output <32 ma. (Modified level signal)

(5) The master controller compares this modified level signal with the 32 ma desired level input.

(6) The resultant positive error signal causes the integrator output to increase.

(7) The feedwater pump turbine(s) increase in speed and feed flow increases until it matches steam flow.

(8) When steam flow and feed flow are equal, the comparator output is 32 ma.

(9) Assuming reactor water level has not changed, the two 32 ma signals cancel and the error network output is 32 ma.*

(10) This output is identical to the desired level and no error signal is generated.

(11) The integrator output will stop increasing since the input error signal has been cancelled.

(12) Final result: Steam flow and feed flow are equal, reactor water level is 32", integrator output is at some new, higher value and the feedwater pump turbines are at a higher speed.

c) Feed Flow Exceeds Steam Flow

(1) Same as b) except some signs are changed.

---

*In reality, water level will decrease somewhat before returning to normal, but it is assumed not to change for the purpose of this discussion.

5) Bypass Valve Control

a) Essentially identical to single element control (as illustrated).

b) Normally used for plant start-ups.

b. Abnormal Operation

1) Steam Leak Detection Device (Figure 12)

a) Compares total steam flow with 1st stage turbine pressure (a measure of turbine steam flow).

b) A predetermined mismatch actuates an alarm unit.

c) Mismatch annunciation time delayed for 30 seconds.

d) Turbine first stage pressure is indicated on a recorder as turbine steam flow.

2) Loss of Signal (Note: The following assumptions are made with gain of all amps = 1.0)

a) Loss of one steam flow input (at 100% power, 3 element control)

(1) Total steam flow now indicates 75% (actual steam flow still 100%).

(2) Total feed flow still 100%.

(3) 25% mismatch sensed in flow comparator.

(4) 25% mismatch results in a -10 ma error signal.

(5) Amplified by 1.0 and summed with 32 ma, resultant output of flow comparator is 22 ma.

(6) Level vs. flow error network compares this signal with normal 33" (32 ma) level signal.

(7) Result is +10 ma error signal, which is summed with 32 ma for a resultant output of 42 ma.

(8) Master controller summer compares 42 ma with 32 ma. Result is -10 ma error signal sent to integrator.

(9) Integrator output decreases to attempt to rectify error signal.

(10) Feedwater pump turbines decrease speed, reducing feedwater flow.

(11) Although steam flow indication has changed, actual steam flow has not.

(12) Feed flow is now less than steam flow and vessel level begins to decrease.

(13) The decreasing vessel level input signal to the level vs flow error network begins to offset the erroneous steam flow signal.

(14) When actual vessel level has decreased to 18", (a 15" level change) the level input to the level vs. flow error network is 22 ma ($18'' \times \frac{2\ ma}{3''} + 10\ ma$).

(15) This exactly balances the 22 ma from the steam flow - feed flow comparator and the error network output returns to 32 ma.

(16) However, since an actual steam flow - feed flow mismatch still exists, reactor level continues to decrease.

(17) This creates a negative error signal in the error network, resulting in an output of <32 ma.

(18) The master controller summer compares this with the desired 32 ma, and a positive error signal is developed.

(19) Integrator output begins to increase.

(20) Feedwater pump turbines increase speed until feed flow and steam flow are again equal (at 100% each).

(21) Reactor water level stabilizes at 18".

(22) Final result:

Reactor power is 100%.
Reactor water level is 18".
Steam flow and feed flow are both 100%.
Total steam flow signal is only 75%.

b) Complete loss of steam flow signal (@ 100% power, 3 element control)

(1) Error signal would drive steam flow vs. feed flow comparator output to a minimum signal (10 ma).

(2) Level would have to decrease below the scram setpoint to compensate for this flow error.

(3) Reactor would scram on low water level.

c) Loss of one feedwater flow input (100% power, 3 element control)

(1) Since there are 2 feedwater flow element, the loss of one input corresponds to a 50% loss of feedwater signal.

(2) The resultant flow error demands more feedwater flow.

(3) Assuming steam flow remains constant, reactor level begins to increase.

(4) A 30" level increase (to +62") would offset the flow error and return feedwater flow to 100%.

(5) Since the main turbine and RFP's trips at +54", the transient will result in a scram.

d) Complete loss of feedwater flow input (at 100% power, three element control)

(1) The large flow error will cause level to increase to +54", where the main turbine and the RFP's trip resulting in a scram.

e) Loss of level input (100% power, 3 element control)

(1) Essentially the same as zero level.

(2) Master controller output tries to increase level by increasing feedwater pump turbine speed to maximum.

(3) Level will increase until RFP's and main turbine trip at +54".

f) Loss of control signal to turbine speed controls

(1) Would cause reduction of speed to low speed stops of Motor Gear Unit (MGU) for RFP turbine affected.

(2) Control signal failure alarm unit (Figure 12) monitors signal and trips if it falls below the normal range (10-50 ma). Normally set at 41 ma.

(3) Results in interruption of power to the MGU (lockup) which fails "as is", thus turbine speed is fixed.

(4) Control of the turbine (manual only) can be regained by lowering the motor speed changer (MSC) until it is the lower demand value, then energizing a hydraulic jack solenoid.

(5) The hydraulic jack will use turbine control oil pressure to move the MGU to its high speed stops, allowing the MSC full range speed control of the RFPT.

(6) The signal failure is a seal-in function and must be manually reset when the control signal is available. Note: The MGU demand from the M/A station must be run to demand full scale (HSS) of the MGU before resetting.

g) High Reactor Vessel Water Level

(1) For turbine protection, turbine trips are initiated on high water level.