QA: NA

THE USE OF DEATH VALLEY REGIONAL FLOW SYSTEMS RESULTS IN THE SITE-SCALE FLOW AND TRANSPORT CALCULATIONS

September 2002

Preparation:

G.A. Zyvoloski, Principal Investigator, Saturated Zone Department — Date 09-10-02

Approval:

A.A. Eddebbarh, Department Manager, Saturated Zone — Date 09-10-02

PRD 9-25-02
For editorial changes only

P.R. Dixon, Subproject Manager, Natural Systems — Date 9/10/02

Reviewed by:

Thom Booth, License Application Project — Date 9/10/02

ENCLOSURE 3

CONTENTS

Page

ACRONYMS AND ABBREVIATIONS v

1. BACKGROUND 1

2. APPLICABLE NUCLEAR SAFETY STANDARDS/REQUIREMENTS/GUIDANCE 1
   2.1 APPLICABLE REQUIREMENTS 1
   2.2 KTI AGREEMENTS 1
   2.3 STATUS OF AGREEMENTS 2

3. THE USE OF DVRFS RESULTS IN THE SITE-SCALE FLOW AND TRANSPORT CALCULATIONS 2
   3.1 INTRODUCTION 2
   3.2 APPLICATIONS OF THE 1997 USGS DVRFS GROUNDWATER FLOW MODEL 4
   3.3 APPLICATIONS OF THE 2001 USGS DVRFS GROUNDWATER FLOW MODEL 6
   3.4 2001 DVRFS MODEL FLUXES THROUGH SITE-SCALE MODEL BOUNDARIES 7
      3.4.1 Location of the Site-Scale Model in the Regional Grid 7
      3.4.2 Total Lateral Fluxes for the Site-Scale Domain 7
   3.5 STATUS SUMMARY 13

4. REFERENCES 13
   4.1 DOCUMENTS CITED 13
   4.2 CODES, STANDARD, REGULATIONS, AND PROCEDURES 14

FIGURES

Page

1. Death Valley Regional Groundwater Flow System and Associated Model Boundaries 3
2. Flux Zones Used for Comparing Regional and Site Scale Fluxes 4

TABLES

Page

1. Comparison of Regional and Site-Scale Fluxes 5
2. Flux Values for Site-Scale Model West Boundary (Column 64) 9
3. Flux Values for Site-Scale Model North Boundary (Row 85) 10
4. Flux Values for Site-Scale Model East Boundary (Column 84) 11
5. Flux Values for Site-Scale Model South Boundary (Row 115) 12
6. Total In/Out and Net Flux Values for Site-Scale Model Boundaries 13

ACRONYMS AND ABBREVIATIONS

DOE	U.S. Department of Energy
DVRFS	Death Valley Regional Flow System
HFM	Hydrogeologic Framework Model
kg/s	kilogram per second
km^2	square kilometer(s)
KTI	key technical issue
m	meter(s)
m^3/day	cubic meters per day
NRC	U.S. Nuclear Regulatory Commission
SZ	saturated zone
USFIC	Unsaturated and Saturated Flow Under Isothermal Conditions
USGS	U.S. Geological Survey
UTM	Universal Transverse Mercator

1. BACKGROUND

This report, presents part of the technical basis for closure of the key technical issue (KTI) agreement: Unsaturated and Saturated Flow Under Isothermal Conditions Subissue 5 Agreement 9 (USFIC 5.09). This report discusses the use of the revised regional flow model in future site-scale model calculations. It accompanies *A Three-Dimensional Numerical Model of Predevelopment Conditions in the Death Valley Regional Ground-Water Flow System, Nevada and California* (D'Agnese et al. 2002) and *Calibration of the Site-Scale Saturated Zone Flow Model* (BSC 2001a).

The interest in the revised regional and site-scale models described in these reports originated with requests by the U.S. Nuclear Regulatory Commission (NRC) under USFIC Subissue 5 (Saturated Zone Ambient Flow Conditions and Dilution Processes). Specifically, the U.S. Department of Energy (DOE) agreed to provide the NRC with updated information on both the regional and site-scale models. In an October 31 through November 2, 2000, technical exchange (Reamer and Williams 2000), the request addressed by this report was formalized in an NRC/DOE agreement.

2. APPLICABLE NUCLEAR SAFETY STANDARDS, REQUIREMENTS, AND GUIDANCE

2.1 APPLICABLE REQUIREMENTS

The Yucca Mountain disposal regulations include requirements for evaluating postclosure performance of the proposed repository, including multiple barriers (10 CFR 63.113), and a description of the capabilities of the natural and engineered barriers (10 CFR 63.115). Information from the regional-scale and site-scale models presented in this report provides further description of the characterization of the saturated zone (SZ) barrier, which is part of the multiple barrier system.

2.2 KTI AGREEMENTS

This report addresses the following KTI agreement:

> USFIC 5.09: Provide additional information in an updated AMR [analysis/model report] or other document for both the regional and site-scale model (for example, grid construction, horizontal and vertical view of the model grid, boundary conditions, input data sets, model output, and the process of model calibration). The updated USGS Regional Groundwater Flow Model is a USGS product, not a Yucca Mountain Site Characterization Project product. It is anticipated that this document will be available in September 2001. The DOE believes that the requested information is now available in the current version of the Calibration of the Site-Scale Saturated Zone Flow Model AMR and will be carried forward in future AMR revisions.

Per the wording of the agreement, the requested information pertains to the regional and site scale models. This agreement is being addressed with the submission of three documents. The request for updated regional information is addressed with the submission of

A Three-Dimensional Numerical Model of Predevelopment Conditions in the Death Valley Regional Ground-Water Flow System, Nevada and California (D'Agnese et al. 2002). The request for site-scale model information is addressed with the submission of *Calibration of the Site-Scale Saturated Zone Flow Model* (BSC 2001a). This report provides a discussion of the updated regional model and describes how the updated information in the model will be used in future site-scale model calculations.

2.3 STATUS OF AGREEMENTS

The three documents described above fully address the agreement and, pending the NRC review and acceptance, the agreement should be closed.

3. THE USE OF DVRFS RESULTS IN THE SITE-SCALE FLOW AND TRANSPORT CALCULATIONS

3.1 INTRODUCTION

The Death Valley regional flow system (DVRFS) is a model developed by the U.S. Geological Survey (USGS) that comprises about 80,000 km^2 and includes natural groundwater divides and discharge areas. The Yucca Mountain site-scale flow and transport model comprises a small portion of the area of the larger model. The relationship of the two models is shown in Figure 1. Also shown in Figure 1 are the boundaries of the 1997 DVRFS model (labeled as the Regional-Scale Flow and Transport Model), the predecessor of the 2001 DVRFS model. This report discusses the use of the 2001 DVRFS model in future site-scale model calculations.

Because of the size of the regional system and the fact that the regional model incorporates the discharge zones as well as the groundwater divides, the fluxes are expected to be accurate. This is due to more accurate specification of model boundary fluxes. Since the site-scale model does not have discharge areas and uses fixed-head boundary conditions, fluxes from the regional model are useful to constrain flow at the site scale. Ideally, the predicted regional-model fluxes and spatially integrated site-scale model fluxes would match at the site-scale model boundaries.

The study of numerical representations of different conceptual models has yielded some useful insights about regional-scale flux data. Model runs both with the total system performance assessment for site recommendation model (BSC 2001b) and the various conceptualizations of the large hydraulic gradient (Zyvoloski et al. 2002) have revealed a pervasive upward gradient from the regional carbonate aquifer to the overlying volcanic aquifer. Recent Nye County wells also support these findings (Nye County 2001). The results of particle tracking simulations indicate that, in the model, fluid particles leaving the proposed repository region will not enter the carbonate aquifer (Zyvoloski et al. 2002). This evidence, in turn, supports the theory that the shallower volcanic and alluvial aquifers near Yucca Mountain, depicted in the site-scale model, are the aquifers most likely to carry radionuclides and are independent of the regional carbonate aquifer. Therefore, the local site-scale volcanic aquifers are little influenced by fluxes in the regional model. Further south along the predicted transport path lines, according to the site-scale

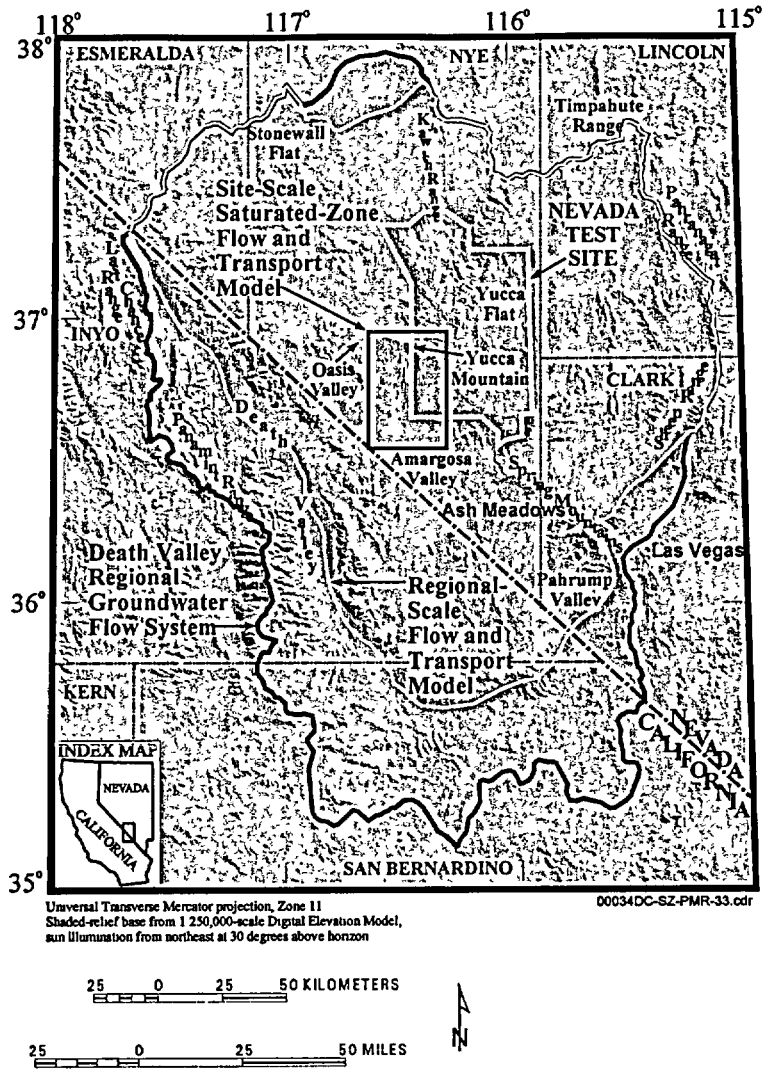

Figure 1. Death Valley Regional Groundwater Flow System and Associated Model Boundaries

model, the fluid flow transitions from the volcanic aquifers to the alluvium. At this location, model results indicate a somewhat stronger influence of lateral boundary fluxes from the regional model. The influence of boundary fluxes and, therefore, regional-model results can be important to the position of the path lines and how much alluvial material they encounter. This result, in turn, affects repository performance with regard to length of time for the release of radionuclides to the human receptor.

This report describes the association between the regional and site-scale models. Use of regional-model results for calibration of the site-scale model and limitations encountered are reviewed. Opportunities for using updated information from the regional model in future site-scale model calculations and limitations of regional-model results are discussed, and a preliminary analysis of regional-model fluxes is included to demonstrate potential regional-model applications for the site-scale model.

3.2 APPLICATIONS OF THE 1997 USGS DVRFS GROUNDWATER FLOW MODEL

The site-scale flow and transport model described in *Calibration of the Site-Scale Saturated Zone Flow Model* (BSC 2001a) used 8 values of fluxes from the 1997 DVRFS model (D'Agnese et al. 1997) as targets during the calibration process. The fluxes used were along the northern and eastern boundaries of the site-scale model and are shown in Figure 2. Fluxes into the western boundary were not used due to uncertainty in the geologic framework model in that area, and fluxes through the southern boundary were not used because this would over-constrain the model. In areas of the site-scale model domain where water-level measurements were sparse, more weight in the calibration was necessarily given to the flux targets. As shown in Figure 2, the fluxes derived from the 1997 DVRFS model were subdivided on each side. The values of the flux targets and the results of the site-scale flow and transport model are shown in Table 1.

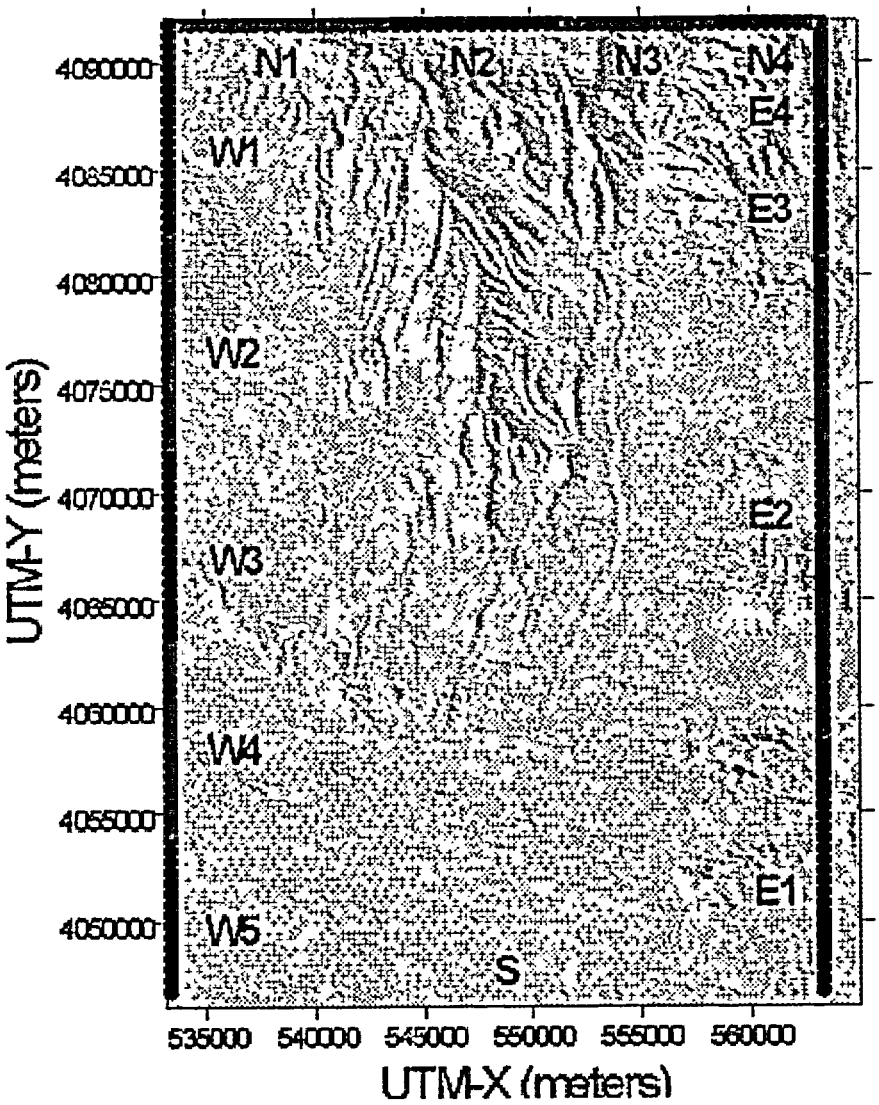

Figure 2. Flux Zones Used for Comparing Regional and Site Scale Fluxes

In the north, many aspects of the system, including geology and heads, are uncertain. A reasonable match between the total 1997 DVRFS model flux across the northern boundary and the fluxes calculated from the calibrated site-scale model was obtained. The 1997 DVRFS model predicted a total flux of about –189 kg/s into the northern boundary of the site-scale model, and the calibrated site-scale model calculated about –169 kg/s into the northern boundary. Comparison of flux values for the four zones along the northern boundary in Table 1 shows that spatially distributed or unit-by-unit matches were not found. The mismatch in fluxes can be attributed to differences in vertical grid resolution, representation of cell permeabilities, and differences in hydrogeologic framework models.

A good match was obtained in the east because the flow was dominated by the properties of a thrust zone. The 1997 DVRFS model flux through zone E1 was about –555 kg/s into the site-scale model. The calibrated site-scale model calculated a flux of about –554 kg/s through this zone. This match occurred because the behavior of the thrust zone was determined by a single parameter, which was permeability of the thrust zone. There were no wells in this area to provide head calibration targets; thus, significant weight was given to the flux from the 1997 DVRFS model.

Table 1. Comparison of Regional and Site-Scale Fluxes

Boundary Zone	Regional Flux (kg/s)	Site-Scale Flux (kg/s)	Calibration Target
N1	–101	–60.0	Yes
N2	–16.5	–33.4	Yes
N3	–53.0	–30.6	Yes
N4	–18.4	–44.8	Yes
W1	3.45	4.17	No
W2	–71	–0.00719	No
W3	–6.9	–0.0000078	No
W4	2.73	–0.0000223	No
W5	–47.0	–6.85	No
E1	–555	–554	Yes
E2	–5.46	3.53	Yes
E3	2.65	16.5	Yes
E4	–3.07	16.8	Yes
S	918	724	No

Source: BSC (2001a).

NOTES:
1. A negative value indicates flow into the model.
2. Information in the last column indicates whether the regional-model flux for a zone was used as a calibration target for the site-scale model.
3. Some numbers in this table were rounded to three significant figures compared to those reported in the source document.

Two factors limited the applicability of the 1997 DVRFS model results to site-scale flow model analyses:

1. The 1997 DVRFS model lacked adequate vertical resolution having only three layers in the vertical direction. Differences in vertical resolution make permeability comparisons difficult.

2. The 1997 DVRFS model used a concept of permeability classes and did not explicitly relate these classes to permeabilities of the hydrogeologic units, thus making comparisons of calibrated permeabilities between the two models unfeasible.

3.3 APPLICATIONS OF THE 2001 USGS DVRFS GROUNDWATER FLOW MODEL

The use of the 2001 DVRFS model (D'Agnese et al. 2002) presents an improvement over the use of the 1997 DVRFS fluxes because the calibration parameters in the 2001 model are the permeabilities. Therefore, information on fluxes can be viewed not only spatially but also on a unit-by-unit basis. As discussed previously, an important distinction can be made between the fluxes in the regional carbonate aquifers and fluxes in the more local volcanic aquifers. Despite the numerous improvements in the 2001 DVRFS model, some limitations to the applicability to the site-scale flow model remain:

- The 2001 DVRFS model has more vertical layers (15) than the 1997 model but still considerably less than the site-scale model, which uses 40 vertical layers. Differences in vertical resolution between the regional and site-scale models limit the comparison of calibrated permeabilities for the hydrogeologic units.

- The 2001 DVRFS model is based on a different hydrogeologic framework model than the current site-scale model. A comparison of the regional and site-scale models should include comparison of calibrated values of permeabilities of hydrogeologic units. Differences in the spatial definition of hydrogeologic units make comparison problematic.

- The 2001 DVRFS model uses the Hydrogeologic Unit Flow package (Anderman and Hill 2000) to calculate cell permeabilities in the coordinate directions. This package makes the permeability in a cell difficult to obtain.

Within the bounds of these limitations, uses for the 2001 DVRFS model are:

- Analysis of flux data from the DVRFS and comparison to data from the site-scale model

- Development of a better understanding of the relationship between the fluid flow path and lateral boundary flux, especially in the southeastern part of the site model

- Comparison of permeabilities estimated for both models

- Calculation of sensitivity to permeability of fluxes in both the regional and site-scale models.

3.4 2001 DVRFS MODEL FLUXES THROUGH SITE-SCALE MODEL BOUNDARIES

This section provides a preliminary analysis of flux data from the 2001 DVRFS model. Fluxes through the boundaries of the site-scale model predicted by the 2001 DVRFS model were extracted from the 2001 DVRFS model output files and are presented in this section. These fluxes are from a version of the regional-scale model dated September 28, 2001. Before providing the fluxes, the interface between the 2001 DVRFS model and the current site-scale model is discussed.

3.4.1 Location of the Site-Scale Model in the Regional Grid

In MODFLOW 2000 (Harbaugh et al. 2000), model cell rows and columns are numbered such that row numbers increase to the south and column numbers increase to the east. The cell faces from the 2001 DVRFS model closest to the boundaries of the site-scale model follow:

West boundary: east (right) face of column 64, from row 86 to row 115
East boundary: east (right) face of column 84, from row 86 to row 115
North boundary: south (front) face of row 85, from column 65 to column 84
South boundary: south (front) face of row 115, from column 65 to column 84.

Site-scale model boundary coordinates with respect to the Universal Transverse Mercator (UTM) grid follow:

The X UTM coordinate of the west boundary is 533,000 m east.
The X UTM coordinate of the east boundary is 563,000 m east.
The Y UTM coordinate of the south boundary is 4,046,500 m north.
The Y UTM coordinate of the north boundary is 4,091,500 m north.

These boundaries are shifted 340 m west and 280 m south relative to the boundaries of the site-scale model used for site recommendation.

3.4.2 Total Lateral Fluxes for the Site-Scale Domain

Preliminary cell-by-cell flux values were extracted from the 2001 DVRFS model output files along the above boundaries. These flux values in units of m^3/day are shown in Tables 2 through 5. In these tables, negative values indicate flux into the site-scale domain.

These cell-by-cell flux values are summed to provide the total lateral flux for each boundary. Total fluxes are shown in Table 6. Summing these total lateral fluxes shows that there is a net outward flux of 6419 m^3/day across the lateral boundaries. This is equal to the amount of recharge applied to the upper surface of this model within these boundaries. Recharge for the site-scale model is provided by a detailed recharge model (BSC 2001a). A value of 6420 m^3/day for total recharge was extracted from the DVRFS model input files for this comparison. Table 6 shows that the total outflow across lateral boundaries is 58,054 m^3/day. Flux values in m^3/day from Table 6 can be converted to flux values in units of kg/s for comparison with the 1997 DVRFS model and site-scale model results in Table 1 by multiplying the net flux values in Table 6 by 0.01157. Using this conversion factor, the flux from the 2001 DVRFS model into the northern boundary of the site-scale model is about –271 kg/s as compared to a value of about –

189 kg/s from the 1997 DVRFS model and about –169 kg/s calculated from the calibrated site-scale model. The flux from the 2001 regional model into the eastern boundary of the site-scale model is about –209 kg/s, compared to a value of about –561 kg/s from the 1997 DVRFS model and about –517 kg/s calculated from the calibrated site-scale model. For the two boundaries used for calibration, the 2001 DVRFS model produced a flux for the northern boundary that is 161 percent of the flux value calculated from the calibrated site-scale model and a flux for the eastern boundary that is 40 percent of the flux value calculated from the calibrated site-scale model.

Table 2. Flux Values for Site-Scale Model West Boundary (Column 64)

	Row Number																													
Layer	86	87	88	89	90	91	92	93	94	95	96	97	98	99	100	101	102	103	104	105	106	107	108	109	110	111	112	113	114	115
1	-17	-37	-56	-81	0	0	-5	-5	-5	0	0	0	0	0	0	8	-14	-88	-138	-159	-220	-351	-19	0	-4	0	0	0	0	0
2	-17	-37	-56	-81	0	0	-8	-6	-5	0	0	0	0	0	0	8	-14	-52	-138	-159	-220	-320	0	0	0	0	0	0	0	0
3	-17	-37	-56	-81	0	0	0	-6	-4	0	0	0	0	0	0	7	-11	-9	-138	-159	-221	-75	0	0	0	0	0	0	0	0
4	-34	-73	-111	-161	0	0	0	-12	-9	0	0	0	0	0	0	0	-16	-40	-396	-452	-216	-119	0	0	0	0	0	0	0	0
5	-34	-73	-112	-161	0	0	0	0	0	0	0	0	0	0	0	0	-27	-28	-66	-93	-75	-31	0	0	0	0	0	0	0	249
6	-34	-73	-113	-13	0	0	-3	-2	-2	0	0	0	0	0	0	0	-51	-25	-56	-75	-75	0	0	0	0	0	0	0	264	330
7	-34	-74	-114	0	0	-1	-3	-2	-1	0	0	0	0	0	0	0	-186	-25	-40	-56	-66	0	0	0	0	0	0	0	337	337
8	-33	-74	-114	0	0	-1	-3	-3	0	0	0	0	0	0	0	0	13	-26	-40	-57	0	0	0	0	0	0	0	0	330	354
9	-33	-75	-79	0	0	-1	-2	-3	0	0	0	0	0	0	0	0	0	-5	-4	-10	0	0	0	0	0	0	0	111	325	381
10	-33	-75	0	0	0	-1	-2	-2	0	0	0	0	0	0	0	0	0	0	0	0	0	0	0	0	0	0	0	427	321	410
11	-49	-108	0	0	0	-2	-3	-3	0	0	0	0	0	0	0	0	0	0	0	0	0	0	0	0	0	0	0	659	478	672
12	-1	0	0	0	0	-2	-4	0	0	0	0	0	0	0	0	0	0	0	0	0	0	0	0	0	0	0	0	904	629	947
13	0	0	0	0	-2	-3	-4	0	0	0	0	0	0	0	0	0	0	0	0	0	0	0	0	0	0	0	0	1,128	763	1,204
14	0	0	0	0	-2	-3	0	0	0	0	0	0	0	0	0	0	0	0	0	0	0	0	0	0	0	0	759	996	740	1,166
15	0	0	0	0	-3	-2	0	0	0	0	0	0	0	0	0	0	0	0	0	0	0	0	0	0	0	0	1,098	1	533	1,331

NOTE: Cells are identified by model layer, row, and column number. Units are m^3/day. Negative values indicate flux into the site-scale model domain. Values are rounded to nearest integer.

Table 3. Flux Values for Site-Scale Model North Boundary (Row 85)

	Column Number																			
Layer	65	66	67	68	69	70	71	72	73	74	75	76	77	78	79	80	81	82	83	84
1	-94	-105	-114	-122	-130	-141	-152	-159	-158	-137	-87	-49	-21	1	93	81	26	-6	-43	-6
2	-94	-105	-114	-122	-130	-141	-152	-159	-158	-137	-87	-49	-21	1	12	81	27	-5	-43	-3
3	-94	-105	-114	-122	-130	-141	-152	-159	-158	-137	-87	-49	-21	1	12	81	27	0	-4	-3
4	-189	-210	-228	-243	-259	-282	-303	-318	-316	-274	-174	-99	-43	1	24	5	42	0	-4	0
5	-189	-210	-228	-243	-260	-282	-304	-318	-316	-274	-174	-99	-43	1	23	-6	-1	-2	0	0
6	-189	-210	-228	-244	-260	-282	-304	-318	-316	-275	-174	-99	-43	1	23	-4	-3	0	0	0
7	-190	-210	-228	-244	-260	-282	-304	-319	-314	-261	-157	-74	-46	0	22	-3	0	0	0	0
8	-190	-211	-229	-245	-261	-282	-305	-248	0	0	0	0	0	0	18	-2	0	0	0	0
9	-190	-211	-230	-245	-262	-282	-306	0	0	0	0	0	0	0	15	-1	0	0	0	0
10	-191	-212	-230	-246	-262	-282	-306	0	0	0	0	0	0	0	0	0	0	0	0	0
11	-288	-320	-347	-370	-395	-424	-58	0	0	0	0	0	0	0	0	0	0	0	0	0
12	-11	-15	-19	-25	-32	-47	0	0	0	0	0	0	0	0	0	0	0	0	0	0
13	0	0	0	0	0	0	0	0	0	0	0	0	0	0	-1	0	0	0	0	0
14	0	0	0	0	0	0	0	0	0	0	0	0	0	0	0	0	0	0	0	0
15	0	0	0	0	0	0	0	0	0	0	0	0	0	0	0	0	0	0	0	0

NOTE: Cells are identified by model layer, row, and column number. Units are m^3/day. Negative values indicate flux into the site-scale model domain. Values are rounded to nearest integer.

Table 4. Flux Values for Site-Scale Model East Boundary (Column 84)

	Row Number																												
Layer	86	87	88	89	90	91	92	93	94	95	96	97	98	99	100	101	102	103	104	105	106	107	108	109	110	111	112	113	114	115
1	-23	-23	-20	-13	0	0	0	0	-13	-70	-60	-54	-52	-54	-56	-60	-65	-72	-80	-26	-17	-18	0	0	0	-2	-5	-2	-1	-1
2	-4	-10	-19	-6	0	0	0	0	0	-70	-60	-54	-52	-54	-56	-60	-65	-72	-69	-20	-17	-18	0	0	0	0	-5	-2	-1	-1
3	0	0	-3	-6	-2	0	0	0	0	-70	-60	-54	-52	-54	-56	-60	-65	-72	-42	-14	-17	-18	0	0	0	0	-9	-2	-1	-1
4	0	0	0	0	0	1	0	0	0	-73	-120	-108	-105	-107	-113	-120	-130	-143	-80	-28	-34	-36	0	0	0	0	0	-3	-3	-3
5	0	0	0	0	0	1	0	0	0	0	-120	-108	-105	-107	-113	-120	-130	-92	-55	-28	-34	-35	0	0	0	0	0	-6	-3	-3
6	0	0	0	0	0	0	0	0	0	0	-116	-108	-105	-107	-113	-120	-130	-72	-23	-29	-34	-35	0	0	0	0	0	-180	-3	-3
7	0	0	0	0	0	0	0	0	0	0	-80	-108	-105	-107	-113	-120	-101	-48	-23	-29	-35	-34	0	0	0	0	0	-195	-3	-3
8	0	0	0	0	0	0	0	0	0	0	-80	-108	-105	-107	-113	-121	-68	-20	-24	-30	-35	-34	0	0	0	0	-2	-193	-124	-3
9	0	0	0	0	0	0	0	0	0	0	-48	-108	-105	-107	-113	-85	-62	-21	-25	-31	-35	-34	0	0	0	0	-14	-190	-173	-53
10	0	0	0	0	0	0	0	0	0	0	0	-108	-105	-103	-80	-61	-19	-22	-25	-31	-35	-35	0	0	0	0	-14	-188	-170	-166
11	0	0	0	0	0	1	1	1	0	0	0	-109	-139	-95	-87	-84	-29	-34	-39	-47	-53	-25	0	0	0	0	-21	-277	-249	-244
12	0	0	0	0	0	1	1	1	0	0	0	-108	-106	-108	-96	-38	-40	-47	-55	-64	-71	0	0	0	0	0	-31	-334	-317	-316
13	0	0	0	0	0	1	1	1	1	0	-8	-5	-100	-62	-44	-46	-52	-61	-71	-82	-84	0	0	0	0	0	-45	0	-363	-379
14	0	0	0	0	0	1	1	0	1	0	-87	-61	-39	-39	-43	-48	-54	-62	-72	-83	-78	0	0	0	0	-31	-47	0	-348	-365
15	0	0	0	0	0	2	0	0	0	0	-105	-74	-50	-49	-53	-59	-66	-76	-88	-100	-90	0	0	0	0	-42	-53	0	-406	-427

NOTE: Cells are identified by model layer, row, and column number. Units are m^3/day. Negative values indicate flux into the site-scale model domain. Values are rounded to nearest integer.

Table 5. Flux Values for Site-Scale Model South Boundary (Row 115)

	Column Number																			
Layer	65	66	67	68	69	70	71	72	73	74	75	76	77	78	79	80	81	82	83	84
1	-1	-53	-55	-122	190	131	116	116	113	107	105	111	124	140	137	-9	-5	0	1	1
2	-1	-53	-55	-122	190	131	116	116	113	107	105	111	124	140	137	-9	-5	0	1	1
3	-1	-27	-55	-122	190	131	116	116	113	107	105	111	124	140	137	-9	-5	0	1	1
4	-1	-13	-21	-237	379	261	233	233	227	214	210	221	247	280	275	-17	-10	1	2	3
5	-91	-17	-9	-36	377	261	232	233	227	213	210	221	248	280	275	-18	-6	29	2	3
6	-86	-20	-8	-19	306	260	232	233	228	213	210	221	248	282	276	-16	0	76	4	3
7	-81	-22	-8	-17	61	259	231	234	228	213	210	222	248	283	276	-1	0	76	48	3
8	-77	-23	-7	-15	62	202	231	234	229	213	209	222	248	251	42	-1	0	77	156	3
9	-73	-24	-6	-14	35	42	230	235	230	213	209	222	249	6	6	0	0	76	154	9
10	-69	-24	-4	-12	34	44	220	236	231	212	208	222	249	6	1	0	0	75	151	176
11	-96	-22	-3	-16	50	50	53	355	349	318	311	333	373	10	1	0	0	110	223	260
12	-16	-2	3	-18	65	50	42	350	472	422	411	446	498	4	1	0	31	138	290	341
13	-2	-3	11	-18	79	62	54	68	642	523	507	559	187	2	4	0	38	157	354	417
14	-1	-2	15	-15	77	62	57	59	812	512	496	563	1	2	5	1	31	148	348	409
15	435	-1	18	-15	92	74	69	73	121	1,175	647	205	3	5	6	26	32	169	414	485

NOTE: Cells are identified by model layer, row, and column number. Units are m^3/day. Negative values indicate flux into the site-scale model domain. Values are rounded to nearest integer.

Table 6. Total In, Out, and Net Flux Values for Site-Scale Model Boundaries

	West	North	East	South	TOTAL/NET FLUX VALUES
total in:	-7464	-24034	-18100	-2037	-51635
total out:	18221	617	24	39192	58054
net:	10757	-23417	-18076	37155	6419

NOTE: Units are m^3/day. Negative values indicate flux into the site-scale model domain.

3.5 STATUS SUMMARY

This report provides a discussion of the association between the regional and site-scale models and describes how the updated information in the regional model will be used in future site-scale model validation.

Comparison of the site-scale model with an independent model (such as the 2001 DVRFS model) and associated model inputs are being used to validate the SZ site-scale flow model. The strategy emphasizes identification and comparison of potentially important independent models and data. Activities, as needed, providing model validation and development of multiple lines of evidence for the SZ flow and transport model commensurate with Project strategies and objectives will include one or more items from the following:

- Analysis of flux data from the 2001 DVRFS model and comparison to those from the site-scale model. Preliminary cell-by-cell flux values were extracted from the 2001 DVRFS model output files (see Section 3.4). Comparison of these fluxes with those obtained from the calibrated site-scale model indicates very favorable agreement, thus supporting ongoing validation activities.

- Development of a better understanding of the relationship between the fluid flow path and lateral boundary flux, especially in the southeastern part of the site model.

- Comparison of permeabilities obtained through calibration of both models.

- Analyses of the sensitivity to permeability of fluxes in both the DVRFS and site-scale models.

4. REFERENCES

4.1 DOCUMENTS CITED

Anderman, E.R. and Hill, M.C. 2000. *MODFLOW-2000, the U.S. Geological Survey Modular Ground-Water Model - Documentation of the Hydrogeologic-Unit Flow (HUF) Package.* Open-File Report 00-342. Denver, Colorado: U.S. Geological Survey.

BSC 2001a. *Calibration of the Site-Scale Saturated Zone Flow Model.* MDL-NBS-HS-000011 REV 00 ICN 01. Las Vegas, Nevada: Bechtel SAIC Company. ACC: MOL.20010713.0049.

BSC (Bechtel SAIC Company) 2001b. *Input and Results of the Base Case Saturated Zone Flow*

and Transport Model for TSPA. ANL-NBS-HS-000030 REV 00 ICN 01. Las Vegas, Nevada: Bechtel SAIC Company. ACC: MOL.20011112.0068

D'Agnese, F.A; Faunt, C.C.; Turner, A.K.; and Hill, M.C. 1997. Hydrogeologic Evaluation and Numerical Simulation of the Death Valley Regional Ground-Water Flow System, Nevada and California. Water Resources Investigations Report 96-4300. Denver, Colorado: U.S. Geological Survey. ACC: MOL.19980306.0253.

D'Agnese, F.A.; O'Brien, G.M.; Faunt, C.C.; Belcher, W.R.; and San Juan, C. 2002. A *Three-Dimensional Numerical Model of Predevelopment Conditions in the Death Valley Regional Ground-Water Flow System, Nevada and California*. Water-Resources Investigations Report 02-4102. Denver, Colorado: U.S. Geological Survey.

Harbaugh, A.W.; Banta, E.R.; Hill, M.C.; and McDonald, M.G. 2000. *MODFLOW-2000, The U.S. Geological Survey Modular Ground-Water Model—User Guide to Modularization Concepts and the Ground-Water Flow Process*. Open-File Report 00-92. Reston, Virginia: U.S. Geological Survey. TIC: 250197.

Nye County Nuclear Waste Repository Project Office 2001. *Nye County Nuclear Waste Repository Project Office Independent Scientific Investigations Program Final Report, Fiscal Years 1996-2001*. NWRPO-2001-04. [Pahrump], Nevada: U.S. Department of Energy, Nye County Nuclear Waste Repository Project Office. ACC: MOL.20010906.0199.

Reamer, C.W. and Williams, D.R. 2000. Summary Highlights of NRC/DOE Technical Exchange and Management Meeting on Unsaturated and Saturated Flow Under Isothermal Conditions. Washington, D.C.: U.S. Nuclear Regulatory Commission. ACC: MOL.20001128.0206.

Zyvoloski, G.; Kwicklis, E.; Eddebbarh, A.; Arnold, B.; Faunt, C.; and Robinson, B.A. 2002. "The Site-Scale Saturated-Zone Flow Model for Yucca Mountain: Calibration of Different Conceptual Models and Their Impact on Flow Paths." In Press. *Journal of Contaminant Hydrology*. New York, New York: Elsevier.

4.2 CODES, STANDARD, REGULATIONS, AND PROCEDURES

10 CFR 63. Energy: Disposal of High-level Radioactive Wastes in a Geological Repository at Yucca Mountain, Nevada. Readily available.

OFFICE OF CIVILIAN RADIOACTIVE WASTE MANAGEMENT
CALCULATION COVER SHEET

2. Calculation Title
Dose Rate Calculation for the 21-PWR UCF Waste Package

MOL.20010627.0027

3. Document Identifier (including Revision Number)
CAL-UDC-NU-000002 REV 01

4. Total Attachments	5. Attachment Numbers – Number of pages in each
4	I-8, II-2, III-10, and IV (compact disk)

	Print Name	Signature	Date
6. Originator	Georgeta Radulescu	Georgeta Radulescu	05/30/2001
7. Checker	Jabo S. Tang	Jabo S. Tang	05/31/2001
8. Lead	Michael J. Anderson	[illegible]	5/31/01

9. Remarks

Revision History

10. Revision No.	11. Description of Revision
00	Initial issue
01	Sketch SK-0219 REV 01 (Attachment III) replaced sketch SK-0132 REV 03. The surface dose rates were evaluated for the waste package design concept presented in Attachment III, and Tables 17 through 40 were updated. Changes to comply with current procedures were made as nedeed. References were added. Editorial changes were made to the document as needed.

OFFICE OF CIVILIAN RADIOACTIVE WASTE MANAGEMENT

CALCULATION COVER SHEET

1. QA: QA
Page: 1 Of. 46

2. Calculation Title
Dose Rate Calculation for the 21-PWR UCF Waste Package

MOL.20010627.0027

3. Document Identifier (including Revision Number)
CAL-UDC-NU-000002 REV 01

4. Total Attachments	5. Attachment Numbers – Number of pages in each
4	I-8, II-2, III-10, and IV (compact disk)

	Print Name	Signature	Date
6. Originator	Georgeta Radulescu	Georgeta Radulescu	05/30/2001
7. Checker	Jabo S. Tang	Jabo S. Tang	05/31/2001
8. Lead	Michael J. Anderson	[illegible]	5/31/01

9. Remarks

Revision History

10. Revision No.	11. Description of Revision
00	Initial issue
01	Sketch SK-0219 REV 01 (Attachment III) replaced sketch SK-0132 REV 03. The surface dose rates were evaluated for the waste package design concept presented in Attachment III, and Tables 17 through 40 were updated. Changes to comply with current procedures were made as nedeed. References were added. Editorial changes were made to the document as needed.

CONTENTS

Page

1. PURPOSE 6
2. METHOD 6
3. ASSUMPTIONS 6
4. USE OF COMPUTER SOFTWARE AND MODELS 7
   4.1 SOFTWARE 7
   4.2 MODELS 8
5. CALCULATION 8
   5.1 CALCULATION INPUTS 8
      5.1.1 UCF Disposal Container 9
      5.1.2 PWR SNF Assemblies 12
   5.2 DESCRIPTION OF CALCULATIONS 20
      5.2.1 Selection of Source Terms 20
      5.2.2 Geometric Representation of the Source Regions 20
      5.2.3 Material Specification in the MCNP Input 20
      5.2.4 Calculation of the Total Dose Rate 21
      5.2.5 Segments Selected for Surface Dose Rate Calculations 22
6. RESULTS 28
   6.1 BOUNDING SOURCE FOR THE ACTIVE FUEL REGION 28
      6.1.1 Basket Assembly Inside the WP 28
      6.1.2 No Basket Assembly Inside the WP 32
   6.2 HYPOTHETICAL BOUNDING SOURCE 36
   6.3 AVERAGE SOURCE 40
7. REFERENCES 44
   7.1 DOCUMENTS CITED 44
   7.2 CODES, STANDARDS, REGULATIONS, AND PROCEDURES 45
8. ATTACHMENTS 46

FIGURES

Page

1. Source Region Representation in MCNP Calculations 23
2. Lateral View of WP with Basket Assembly for MCNP Calculations 24
3. Lateral View of WP Without Basket Assembly for MCNP Calculations 25
4. Surface Segments Used for Dose Rate Calculations 26
5. Segments of the Top Surface of the WP Cavity Used in Dose Rate Calculations 27
6. Segments of the Bottom Surface of the Top Outer Lid Used in Dose Rate Calculations 27

TABLES

Page

1. Geometry and Material Specifications for the Disposal Container 9
2. Chemical Composition of SA-516 K02700 10
3. Chemical Composition of SA-240 S31600 10
4. Chemical Composition of SB-575 N06022 11
5. Chemical Composition of Neutronit A976 11
6. Chemical Composition of SB-209 A96061 12
7. Mechanical Design Parameters for B&W 15x15 Mark B Fuel Assembly 13
8. Chemical Composition of Zircaloy-4 14
9. Chemical Composition of Inconel-718 14
10. Chemical Composition of SS 304 15
11. Chemical Composition of SS 304L 15
12. Chemical Composition of SS CF-3M 16
13. Chemical Composition of SS 302 16
14. Gamma and Neutron Sources per Assembly for the Bounding PWR SNF 17
15. Gamma and Neutron Sources per Assembly for the Hypothetical Bounding PWR SNF 18
16. Gamma and Neutron Sources per Assembly for the Average PWR SNF 19
17. Dose Rates on the Inner Surface of the Inner Shell: Bounding PWR SNF 28
18. Dose Rates on the Inner Surface of the Outer Shell: Bounding PWR SNF 29
19. Dose Rates on the WP Outer Radial Surface: Bounding PWR SNF 29
20. Dose Rates on a Radial Surface 1 m from the WP: Bounding PWR SNF 30
21. Dose Rates on a Radial Surface 2 m from the WP: Bounding PWR SNF 30
22. Dose Rates on Segments of the Axial Surfaces: Bounding PWR SNF 31
23. Dose Rates on the Inner Surface of the Inner Shell: Bounding PWR SNF, No Basket 32
24. Dose Rates on the Inner Surface of the Outer Shell: Bounding PWR SNF, No Basket 32
25. Dose Rates on the WP Outer Radial Surface: Bounding PWR SNF, No Basket 33
26. Dose Rates on a Radial Surface 1 m from the WP: Bounding PWR SNF, No Basket 33
27. Dose Rates on a Radial Surface 2 m from the WP: Bounding PWR SNF, No Basket 34
28. Dose Rates on Segments of the Axial Surfaces: Bounding PWR SNF, No Basket 35
29. Dose Rates on the Inner Surface of the Inner Shell: Hypothetical PWR SNF 36
30. Dose Rates on the Inner Surface of the Outer Shell: Hypothetical PWR SNF 36
31. Dose Rates on the WP Outer Radial Surface: Hypothetical PWR SNF 37
32. Dose Rates on a Radial Surface 1 m from the WP: Hypothetical PWR SNF 37
33. Dose Rates on a Radial Surface 2 m from the WP: Hypothetical PWR SNF 38
34. Dose Rates on Segments of the Axial Surfaces: Hypothetical PWR SNF 39
35. Dose Rates on the Inner Surface of the Inner Shell: Average PWR SNF 40
36. Dose Rates on the Inner Surface of the Outer Shell: Average PWR SNF 40
37. Dose Rates on the WP Outer Radial Surface: Average PWR SNF 41
38. Dose Rates on a Radial Surface 1 m from the WP: Average PWR SNF 41

TABLES (Continued)

Page

39. Dose Rates on a Radial Surface 2 m from the WP: Average PWR SNF 42
40. Dose Rates on Segments of the Axial Surfaces: Average PWR SNF 43
41. List of Attachments 46
42. File Attributes for the Contents of Electronic Media 46

1. PURPOSE

The objective of this calculation is to determine the maximum dose rate at the external surfaces of a 21-PWR (pressurized water reactor) uncanistered fuel (UCF) waste package (WP). The scope is limited to dose rate evaluation at the emplacement of the WP. The results of this calculation will be used to assess the shielding performance of the 21-PWR WP concept for License Application.

The planning requirements that apply to the generation of this calculation have been identified in *Technical Work Plan for: Waste Package Design Description for SR* (CRWMS M&O [Civilian Radioactive Waste Management and Operator Contractor] 2000a, Waste Package Design Methodology). This calculation is performed and documented according to AP-3.12Q,*Calculations*

2. METHOD

The Monte Carlo radiation transport method, which is implemented in the MCMP computer code (Briesmeister 1997), is used to calculate surface dose rates of waste packages. MCNP uses the continuous-energy cross sections processed from the evaluated nuclear data files (Briesmeister 1997, Appendix G).

The radiation source terms for the PWR SNF were developed in CRWMS M&O (1999a, pp. 17 and 23) for spent fuel with various combinations of burnup, enrichment, and cooling time. The initial uranium content considered in radiation source term generation is 475 kg, and the highest fuel burnup and enrichment considered are 75 GWd/MTU and 5.5 wt% ^{235}U, respectively. In this calculation, "bounding PWR SNF" is the spent fuel with a 75-GWd/MTU burnup, 5.5-wt% enrichment, 5-year cooling time, and an initial uranium content of 475 kg. These values, except the uranium content, bound the initial uranium content (477 kg), burnup (69 GWd/MTU), enrichment (5 wt% ^{235}U), and cooling time (5 year) of the assemblies in the commercial waste stream that will arrive at the repository (CRWMS M&O 2000b, Attachment III, preblend files). The characteristics of an "average PWR SNF" are defined in Assumption 3.3. Dose rate calculations for a "hypothetical bounding PWR SNF" are also included to evaluate an upper limit for the dose rate at the WP external surfaces (See Section 5.2).

The control of the electronic management of data is accomplished in accordance with the process control evaluation for the technical work plan of this calculation (CRWMS M&O 2000a).

3. ASSUMPTIONS

The following assumptions are used throughout Section 5.

3.1 It is assumed that the mechanical design parameters of a B&W 15x15 PWR fuel assembly, provided in the U.S. Department of Energy (DOE) (1987, pages 2A-31 through 2A-35), are generic characteristics of assemblies in the commercial PWR waste stream. The rationale for this assumption is that the radiation source terms were generated in

CRWMS M&O (1999a) for the B&W 15x15 PWR fuel assembly, which is considered descriptive of the commercial PWR waste stream.

3.2 The radiation source and contents of each assembly region are homogenized inside the assembly region volume. The rationale for this assumption is that the surface dose rates for a WP with this geometric representation for the fuel assemblies and for a WP with detailed geometric representation for the fuel assemblies are the same within statistical limits (CRWMS M&O 1998b, Section 6).

3.3 The PWR spent nuclear fuel (SNF) having 4.0-wt% initial ^{235}U, 48-GWd/MTU burnup, 21-year decay time, and 475 kg initial uranium is assumed to be the SNF with average characteristics. The rationale for this assumption is that the source term for the SNF with these characteristics generates conservative (higher) dose rates for an average PWR SNF. The average PWR SNF is estimated in CRWMS M&O (1999a, p. 24).

3.4 A peaking factor of 1.25 bounds the axial distribution of gamma and neutron sources in the active fuel region. This value is based on the predicted heat profile for a PWR assembly provided by Electric Power Research Institute (EPRI 1989, p. 3-26).

3.5 The length of the bottom end-fitting of the PWR assembly is not provided in DOE (1987). It is assumed that the length of the bottom end-fitting is 4 in. The rationale for this assumption is that this length leads to higher dose rates on the WP surfaces adjacent to the bottom end-fitting region of the PWR SNF assemblies.

3.6 The chemical composition of the SNF is assumed the same as that of the fresh fuel. The rationale is that small weight variations of the elements do not affect the accuracy of dose results, as long as the total weight is maintained.

3.7 The chemical composition of Neutronit A976 is assumed for Neutronit A978, which is a molybdenum alloyed Bohler Neutronit (Kugler 1996). The rationale for this assumption is that by neglecting molybdenum in the Neutronit A976 chemical composition, the balance element iron is increased, which provides conservative (higher) dose rates at the external surfaces of the WP.

4. USE OF COMPUTER SOFTWARE AND MODELS

4.1 SOFTWARE

The MCNP 4B2LV computer code is used to calculate neutron and gamma fluxes on the WP surfaces for dose rate evaluations.

- Program name: MCNP.

- Version/Revision number: Version 4B2.
- Computer Software Configuration Item (CSCI) Number: 30033 V4B2LV (CRWMS M&O 1998a).
- Computer Type: Hewlett Packard (HP) workstation "Bloom" (Tag: CRWMS-M&O 700887).
- Operating System: HP-UX (Hewlett Packard-UNIX) 10.20.
- The MCNP 4B2LV computer code is an appropriate tool to determine the dose rates on the surface and near the surface of a WP containing 21 PWR SNF assemblies.
- This software has been validated over the range it was used.
- This software was previously obtained from the Software Control Management in accordance with appropriate procedures.

The input file for each computer calculation is echoed in the output file of the calculation. The output files are described in Section 8.

4.2 MODELS

None used.

5. CALCULATION

5.1 CALCULATION INPUTS

The following sections outline the information used in calculation of dose rates on the waste package surfaces. Each MCNP calculation requires the following information: geometry, material, and source parameters. The WP consists of the UCF disposal container, 21 PWR SNF assemblies, and a basket assembly. Sketch SK-0219 REV 01, which is shown in Attachment III, provides geometry and material specifications for the 21-PWR WP concept for License Application. It should be noted that the lifting features and the welds of the waste package were not represented in the MCNP geometry since by neglecting these components the dose rates increase at the top and bottom of the waste package. Therefore, only the sheets of sketch SK-0219 REV 01 that were actually used in this calculation are included in Attachment III. The information provided by the sketch is that of the potential design of the type of WP considered in this calculation.

The number of digits in the values cited herein may be the result of a calculation or may reflect the input from another source; consequently, the number of digits should not be interpreted as an indication of accuracy.

5.1.1 UCF Disposal Container

The disposal container consists of a inner reinforcement cylinder made of stainless steel, an outer corrosion resistant shell, inner shell lids, outer shell lids, and a basket assembly. Table 1 presents the geometry and material specifications for the disposal container of 21-PWR SNF assemblies, as indicated in sketch SK-0219 REV 01. Tables 2 through 6 present the chemical compositions for the structural materials of this container.

Table 1. Geometry and Material Specifications for the Disposal Container

Component	Material	Characteristic	Dimension (mm)	Sketch Sheet
Inner shell	SA-240 S31600	Thickness	50	19, 24
Outer shell	SB-575 N06022	Thickness	20	15, 24
Inner shell bottom lid	SA-240 S31600	Thickness	88.9	19, 24
Inner shell top lid	SA-240 S31600	Thickness	50.8	24, 20
Outer shell flat bottom lid	SB-575 N06022	Thickness	25.4	24, 17
Outer shell flat closure lid	SB-575 N06022	Thickness	9.525	24, 18
Extended outer shell lid base	SB-575 N06022	Thickness	25.4	24, 17
Top upper closure gap	Air	Thickness	30.08	2
Top lower closure gap	Air	Thickness	44.225	2, 19
Bottom lid gap	Air	Thickness	70	4, 24
Cavity	Air	Length	4,585	7
		Inner diameter	1,424	19
Basket A-sideguide	SA-516 K02700	Thickness	10	24
Basket B-sideguide	SA-516 K02700	Thickness	10	24
Basket corner guide	SA-516 K02700	Thickness	10	24
Basket A-stiffener	SA-516 K02700	Thickness	10	24
Basket B-stiffener	SA-516 K02700	Thickness	10	24
Basket C-stiffener	SA-516 K02700	Thickness	10	24
Fuel basket A-plate	Neutronit A 978	Thickness	7	24
Fuel basket B-plate	Neutronit A 978	Thickness	7	24
Fuel basket C-plate	Neutronit A 978	Thickness	7	24
Fuel basket D-plate	SB-209 A96061 T4	Thickness	5	24
Fuel basket E-plate	SB-209 A96061 T4	Thickness	5	24
Fuel basket tube	SA-516 K02700	Thickness	5	24
		Length	4,575	19
		Inner transverse dimension	226	19

SOURCE: Sketch SK-0219 REV 01.

NOTE: The thicknesses of the top lids used in this calculation slightly differ from those shown in the sketch. However, the total thickness of the top lids used in this calculation is 85 mm, which is 0.725 less than the actual value indicated by the sketch, and provides higher (conservative) dose rates at the top surface of the waste package. Moreover, for conservative evaluations (higher dose rates), the thicknesses of the inner shell, the outer shell, and lids are reduced by 0.25 mm each to account for permissible variations in thickness (ASME 1998, Section II-B, SB-575 , page 762, and Section II-A, SA-480, page 877). The loose fit between the inner and outer shells is neglected to obtain slightly higher (conservative) dose rates at the external radial surface.

Table 2. Chemical Composition of SA-516 K02700

Element	Weight Percent Range[a]	Value Used
Carbon	0.27 (max)	0.27
Manganese	0.85-1.20	1.025
Phosphorus	0.035 (max)	0.035
Sulfur	0.035 (max)	0.035
Silicon	0.15-0.40	0.275
Iron	Balance	98.36
Density[b] = 7.85 g/cm^3		

SOURCE: [a] ASME 1998, Section II-A, SA-516, page 925.
[b] ASME 1998, Section II-A, SA-20, page 67.

Table 3. Chemical Composition of SA-240 S31600

Element	Weight Percent Range[a]	Value Used
Carbon	0.08 (max)	0.08
Manganese	2.00 (max)	2.00
Phosphorus	0.045 (max)	0.045
Sulfur	0.03 (max)	0.03
Silicon	0.75 (max)	0.75
Chromium	16.00-18.00	17.00
Nickel	10.00-14.00	12.00
Molybdenum	2.00-3.00	2.50
Nitrogen	0.10 (max)	0.10
Iron	Balance	65.495
Density[b] = 7.98 g/cm^3		

SOURCE: [a] ASME 1998, Section II-A, SA-240, page 366.
[b] ASTM G 1-90, page 7.

Table 4. Chemical Composition of SB-575 N06022

Element	Weight Percent Range	Value Used
Carbon	0.015 (max)	0.015
Manganese	0.50 (max)	0.50
Silicon	0.08 (max)	0.08
Chromium	20.0-22.5	21.25
Molybdenum	12.5-14.5	13.50
Cobalt	2.50 (max)	2.50
Tungsten	2.5-3.5	3.00
Vanadium	0.35 (max)	0.35
Iron	2.0-6.0	4.00
Phosphorus	0.02 (max)	0.02
Sulfur	0.02 (max)	0.02
Nickel	Balance	54.765
Density = 8.69 g/cm^3		

SOURCE: ASME 1998, Section II-B, SB-575, pages 760 and 761.

The chemical composition of Neutronit A976 is assumed for Neutronit A978 in this calculation (see Assumption 3.7).

Table 5. Chemical Composition of Neutronit A976

Element	Weight Percent Range[a]	Value Used
Carbon	0.04 (max)	0.04
Chromium	18.5	18.5
Nickel	13.0	13.0
Cobalt	0.20 (max)	0.20
Boron	According to specifications	0.75-1.74[b]
Iron	Balance	67.51 or 66.52
Density[a] = 7.76 g/cm^3		

SOURCE: [a] Kugler 1996, pages 14 and 17.
[b] ASTM A 887-89, page 2.

NOTE: The range of boron content is based on those for ASTM A887 type B3 to B6. For conservative (slightly higher) results, 0.75-wt% B is used in neutron dose rate calculation, and 1.74-wt% B is used in gamma dose rate calculations.

Table 6. Chemical Composition of SB-209 A96061

Element	Weight Percent Range[a]	Value Used
Silicon	0.4-0.8	0.6
Iron	0.7 (max)	0.7
Copper	0.15-0.4	0.275
Manganese	0.15 (max)	0.15
Magnesium	0.8-1.2	1.0
Chromium	0.04-0.35	0.195
Zinc[c]	0.25 (max)	0.25
Titanium	0.15 (max)	0.15
Others (each)	0.05 (max)	0.0
Others (total)	0.15 (max)	0.0
Aluminum	Balance	96.68
Density[b] = 2.7 g/cm^3		

SOURCE: [a] ASME 1998, Section II-B, SB-209, page 236.
[b] ASME 1998, Section II-D, Subpart 2, pages 611 and 612.
NOTE: [c] MCNP does not contain neutron cross-section tables for Zn. Al replaces Zn in this calculation because these two elements have similar neutron cross sections.

5.1.2 PWR SNF Assemblies

The PWR SNF assembly used in this calculation is a Babcock and Wilcox (B&W) 15x15 PWR SNF assembly. The mechanical design parameters for a B&W 15x15 PWR fuel assembly are provided in DOE (1987, pages 2A-31 through 2A-35). Table 7 presents these parameters. Tables 8 through 13 present the chemical compositions for the composing materials other than uranium dioxide. CRWMS M&O (1999a) provides the gamma and neutron source terms for the PWR SNF waste stream. Tables 14, 15, and 16 present the gamma and neutron sources for the bounding PWR SNF for the active fuel region, a hypothetical bounding PWR SNF for the active fuel region as well as for the hardware regions, and an average PWR SNF (see Section 5.2), respectively.

Table 7. Mechanical Design Parameters for B&W 15x15 Mark B Fuel Assembly

Design Component	Material	Zone	Characteristic	Reference Page	Value
Assembly	N/A	N/A	Width	2A-31	8.536 in. (21.68144 cm)
			Length	2A-31	165.625 in. (420.6875 cm)
Fuel pin	N/A	In core	Number per assembly	2A-33	208
			Length	2A-33	153.68 in. (390.3472 cm)
Fuel pellets	UO_2	Active fuel	Mass/pin	2A-34	5.58 lb. (2.53105 kg)
			Mass U/assembly	2A-31	0.46363 metric tons
			Diameter	2A-34	0.3686 in. (0.93624 cm)
			Stack length	2A-33	141.8 in. (360.172 cm)
Cladding	Zircaloy-4	In core	Thickness	2A-33	0.0265 in. (0.06731 cm)
			Fuel-clad gap	2A-33	0.0042 in. (0.010668 cm)
Top nozzle	SS CF3M	Top	Mass/assembly	2A-32	7.48 kg
Bottom nozzle	SS CF3M	Bottom	Mass/assembly	2A-32	8.16 kg
Guide tube	Zircaloy-4	In core	Mass/assembly	2A-32	8.0 kg
Instrument tube	Zircaloy-4	In core	Mass/assembly	2A-32	0.64 kg
Spacer-plenum	Inconel-718	Plenum	Mass/assembly	2A-32	1.04 kg
Spacer-bottom	Inconel-718	Bottom	Mass/assembly	2A-32	1.3 kg
Spacer-incore	Inconel-718	In core	Mass/assembly	2A-32	4.9 kg
Spring retainer	SS CF3M	Top	Mass/assembly	2A-32	0.91 kg
Holding spring	Inconel-718	Top	Mass/assembly	2A-32	1.8 kg
Upper end plug	SS 304	Top	Mass/assembly	2A-32	0.06 kg
Upper nut	SS 304L	Top	Mass/assembly	2A-32	0.51 kg
Lower nut	SS 304	Bottom	Mass/assembly	2A-32	0.15 kg
Grid supports	Zircaloy-4	In core	Mass/assembly	2A-32	0.64 kg
Plenum spring	SS 302	Plenum	Mass/assembly	2A-34	0.042 lb. (0.01905 kg)
Plenum region	N/A	N/A	Length[a]	N/A	30.1752 cm
Bottom end-fitting	N/A	N/A	Length[b]	N/A	4 in. (10.16 cm)

NOTES: [a] Calculated: fuel pin length – fuel pellet length = 390.3472 cm – 360.172 cm.
[b] A bottom end-fitting region of 4-in. length provides conservative (higher) dose rates for bottom region of the WP (see Assumption 3.5).

Table 8. Chemical Composition of Zircaloy-4

Element	Weight Percent Range	Value Used
Tin	1.20-1.70	1.45
Iron	0.18-0.24	0.21
Chromium	0.07-0.13	0.115
Oxygen	0.09-0.16	0.125
Iron+Chromium	0.28-0.37	N/A
Zirconium	Balance	98.1

SOURCE: ASTM B 811-90, page 2.

Table 9. Chemical Composition of Inconel-718

Element	Weight Percent Range	Value Used
Nickel	50.0-55.0[a]	51.5
Chromium	17.0-21.0	19.0
Iron	Balance	17.809
Niobium	4.75-5.50[b]	5.125
Molybdenum	2.80-3.30	3.05
Titanium	0.65-1.15	0.90
Aluminum	0.20-0.80	0.50
Cobalt	1.00 (max)	1.00
Manganese	0.35 (max)	0.35
Silicon	0.35 (max)	0.35
Copper	0.30 (max)	0.30
Carbon	0.08 (max)	0.08
Sulfur	0.015 (max)	0.015
Phosphorus	0.015 (max)	0.015
Boron	0.006 (max)	0.006

SOURCE: Inco Alloys International 1988, page 11.
NOTES: [a] Nickel plus cobalt.
[b] Niobium plus tantalum.

Table 10. Chemical Composition of SS 304

Element	Weight Percent Range	Value Used
Carbon	0.08 (max)	0.08
Chromium	18-20	19
Nickel	8-10.5	9.25
Manganese	2.00 (max)	2.00
Phosphorus	0.045 (max)	0.045
Sulfur	0.03 (max)	0.03
Silicon	0.75 (max)	0.75
Nitrogen	0.10 (max)	0.10
Iron	Balance	68.745

SOURCE: ASME 1998, Section II-A, SA-240, page 365.

Table 11. Chemical Composition of SS 304L

Element	Weight Percent Range	Value Used
Carbon	0.03 (max)	0.03
Manganese	2.0 (max)	2.0
Phosphorus	0.045 (max)	0.045
Sulfur	0.03 (max)	0.03
Silicon	0.75 (max)	0.75
Chromium	18-20	19
Nickel	8-12	10
Nitrogen	0.10	0.10
Iron	Balance	68.045

SOURCE: ASME 1998, Section II-A, SA-240, page 365.

Table 12. Chemical Composition of SS CF-3M

Element	Weight Percent Range	Value Used
Carbon	0.03 (max)	0.03
Manganese	1.50 (max)	1.50
Silicon	2.00 (max)	2.00
Chromium	17.0-21.0	19.0
Nickel	8.0-12.0	10.0
Molybdenum	2.0-3.0	2.5
Iron	Balance	64.97

SOURCE: American Society for Metals 1980, page 95.

Table 13. Chemical Composition of SS 302

Element	Weight Percent Range	Value Used
Carbon	0.15	0.15
Manganese	2.00	2.00
Phosphorus	0.045	0.045
Sulfur	0.030	0.03
Silicon	0.75	0.75
Chromium	17.00-19.00	18.00
Nickel	8.00-10.00	9.00
Nitrogen	0.10	0.10
Iron	Balance	69.925

SOURCE: ASME 1998, Section II-A, SA-240, page 365.

Table 14. Gamma and Neutron Sources per Assembly for the Bounding PWR SNF

Gamma Intensity (photons/s)					Neutron Intensity (neutrons/s)	
Upper Energy Boundary (MeV)	Bottom End-Fitting Region	Active Fuel Region	Plenum Fuel Region	Top End-Fitting Region	Upper Energy Boundary (MeV)	Active Fuel Region
5.00E-02	5.28E+11	2.26E+15	4.78E+11	3.37E+11	1.00E-08	0.0000E+00
1.00E-01	1.03E+11	6.28E+14	5.43E+10	6.60E+10	3.00E-08	0.0000E+00
2.00E-01	2.51E+10	5.08E+14	3.20E+10	1.59E+10	5.00E-08	0.0000E+00
3.00E-01	1.25E+09	1.44E+14	1.78E+09	7.92E+08	1.00E-07	0.0000E+00
4.00E-01	1.69E+09	9.63E+13	5.37E+09	1.04E+09	2.25E-07	0.0000E+00
6.00E-01	1.76E+09	1.38E+15	1.01E+11	6.59E+07	3.25E-07	0.0000E+00
8.00E-01	3.93E+09	4.37E+15	5.47E+10	2.13E+09	4.00E-07	0.0000E+00
1.00E+00	1.29E+11	6.37E+14	7.41E+09	7.21E+10	8.00E-07	0.0000E+00
1.33E+00	3.00E+13	4.12E+14	1.55E+13	1.93E+13	1.00E-06	0.0000E+00
1.66E+00	8.47E+12	1.17E+14	4.37E+12	5.44E+12	1.13E-06	0.0000E+00
2.00E+00	1.85E+03	1.34E+12	8.52E+02	1.13E+03	1.30E-06	0.0000E+00
2.50E+00	2.01E+08	2.47E+12	1.04E+08	1.29E+08	1.77E-06	0.0000E+00
3.00E+00	3.12E+05	9.97E+10	1.61E+05	2.00E+05	3.05E-06	0.0000E+00
4.00E+00	4.20E-08	1.25E+10	5.50E-09	2.28E-08	1.00E-05	0.0000E+00
5.00E+00	0.00E+00	4.68E+07	0.00E+00	0.00E+00	3.00E-05	0.0000E+00
6.50E+00	0.00E+00	1.88E+07	0.00E+00	0.00E+00	1.00E-04	0.0000E+00
8.00E+00	0.00E+00	3.69E+06	0.00E+00	0.00E+00	5.50E-04	0.0000E+00
10.00E+00	0.00E+00	7.83E+05	0.00E+00	0.00E+00	3.00E-03	0.0000E+00
Total	3.9264E+13	1.0556E+16	2.0605E+13	2.5235E+13	1.70E-02	0.0000E+00
N/A	N/A	N/A	N/A	N/A	1.00E-01	0.0000E+00
N/A	N/A	N/A	N/A	N/A	4.00E-01	5.27E+07
N/A	N/A	N/A	N/A	N/A	9.00E-01	2.69E+08
N/A	N/A	N/A	N/A	N/A	1.40E+00	2.46E+08
N/A	N/A	N/A	N/A	N/A	1.85E+00	1.81E+08
N/A	N/A	N/A	N/A	N/A	3.00E+00	3.19E+08
N/A	N/A	N/A	N/A	N/A	6.43E+00	2.91E+08
N/A	N/A	N/A	N/A	N/A	20.00E+00	2.57E+07
N/A	N/A	N/A	N/A	N/A	Total	1.3844E+09

SOURCE: CRWMS M&O 1999a, Attachment IV (compact disk), PWR.gamma.source and PWR.neutron.source files.
NOTE: Initial ^{235}U weight percent of 5.5, average burnup of 75 GWd/MTU, and decay time of 5 years.

Table 15. Gamma and Neutron Sources per Assembly for the Hypothetical Bounding PWR SNF

Gamma Intensity (photons/s)					Neutron Intensity[a] (neutrons/s)	
Upper Energy Boundary (MeV)	Bottom End-Fitting Region[b]	Active Fuel Region[a]	Plenum Fuel Region[b]	Top End-Fitting Region[b]	Upper Energy Boundary (MeV)	Active Fuel Region
5.00E-02	8.86E+11	2.26E+15	7.24E+11	5.66E+11	1.00E-08	0.0000E+00
1.00E-01	1.73E+11	6.28E+14	8.98E+10	1.11E+11	3.00E-08	0.0000E+00
2.00E-01	4.22E+10	5.08E+14	4.71E+10	2.68E+10	5.00E-08	0.0000E+00
3.00E-01	2.10E+09	1.44E+14	2.60E+09	1.33E+09	1.00E-07	0.0000E+00
4.00E-01	2.82E+09	9.63E+13	7.49E+09	1.74E+09	2.25E-07	0.0000E+00
6.00E-01	2.40E+09	1.38E+15	1.36E+11	1.11E+08	3.25E-07	0.0000E+00
8.00E-01	5.65E+09	4.37E+15	7.40E+10	3.12E+09	4.00E-07	0.0000E+00
1.00E+00	1.55E+11	6.37E+14	9.81E+09	8.72E+10	8.00E-07	0.0000E+00
1.33E+00	5.05E+13	4.12E+14	2.57E+13	3.24E+13	1.00E-06	0.0000E+00
1.66E+00	1.43E+13	1.17E+14	7.26E+12	9.14E+12	1.13E-06	0.0000E+00
2.00E+00	1.81E+03	1.34E+12	1.17E+03	1.09E+03	1.30E-06	0.0000E+00
2.50E+00	3.38E+08	2.47E+12	1.72E+08	2.17E+08	1.77E-06	0.0000E+00
3.00E+00	5.25E+05	9.97E+10	2.67E+05	3.36E+05	3.05E-06	0.0000E+00
4.00E+00	3.57E-07	1.25E+10	4.66E-08	1.94E-07	1.00E-05	0.0000E+00
5.00E+00	0.00E+00	4.68E+07	0.00E+00	0.00E+00	3.00E-05	0.0000E+00
6.50E+00	0.00E+00	1.88E+07	0.00E+00	0.00E+00	1.00E-04	0.0000E+00
8.00E+00	0.00E+00	3.69E+06	0.00E+00	0.00E+00	5.50E-04	0.0000E+00
10.00E+00	0.00E+00	7.83E+05	0.00E+00	0.00E+00	3.00E-03	0.0000E+00
Total	6.6070E+13	1.0556E+16	3.4051E+13	4.2338E+13	1.70E-02	0.0000E+00
N/A	N/A	N/A	N/A	N/A	1.00E-01	0.0000E+00
N/A	N/A	N/A	N/A	N/A	4.00E-01	5.27E+07
N/A	N/A	N/A	N/A	N/A	9.00E-01	2.69E+08
N/A	N/A	N/A	N/A	N/A	1.40E+00	2.46E+08
N/A	N/A	N/A	N/A	N/A	1.85E+00	1.81E+08
N/A	N/A	N/A	N/A	N/A	3.00E+00	3.19E+08
N/A	N/A	N/A	N/A	N/A	6.43E+00	2.91E+08
N/A	N/A	N/A	N/A	N/A	20.00E+00	2.57E+07
N/A	N/A	N/A	N/A	N/A	Total	1.3844E+09

SOURCE: CRWMS M&O 1999a, Attachment IV, PWR gamma.source and PWR.neutron.source files.
NOTES: [a] Initial ^{235}U weight percent of 5.5, average burnup of 75 GWd/MTU, and decay time of 5 years.
[b] Initial ^{235}U weight percent of 0.711, average burnup of 75 GWd/MTU, and decay time of 5 years.

Table 16. Gamma and Neutron Sources per Assembly for the Average PWR SNF

Gamma Intensity (photons/s)					Neutron Intensity (neutrons/s)	
Upper Energy Boundary (MeV)	Bottom End-Fitting Region	Active Fuel Region	Plenum Fuel Region	Top End-Fitting Region	Upper Energy Boundary (MeV)	Active Fuel Region
5.00E-02	5.49E+10	7.41E+14	3.12E+10	3.53E+10	1.00E-08	0.0000E+00
1.00E-01	1.02E+10	2.16E+14	5.30E+09	6.54E+09	3.00E-08	0.0000E+00
2.00E-01	2.46E+09	1.42E+14	1.54E+09	1.58E+09	5.00E-08	0.0000E+00
3.00E-01	1.23E+08	4.34E+13	7.97E+07	7.89E+07	1.00E-07	0.0000E+00
4.00E-01	1.61E+08	2.91E+13	1.45E+08	1.03E+08	2.25E-07	0.0000E+00
6.00E-01	3.27E+07	2.57E+13	1.39E+09	6.48E+06	3.25E-07	0.0000E+00
8.00E-01	2.09E+09	1.36E+15	2.38E+09	1.44E+09	4.00E-07	0.0000E+00
1.00E+00	2.14E+09	1.52E+13	1.67E+09	1.47E+09	8.00E-07	0.0000E+00
1.33E+00	2.96E+12	4.48E+13	1.54E+12	1.90E+12	1.00E-06	0.0000E+00
1.66E+00	8.36E+11	8.32E+12	4.34E+11	5.38E+11	1.13E-06	0.0000E+00
2.00E+00	1.07E+00	7.48E+10	6.78E+01	9.62E-03	1.30E-06	0.0000E+00
2.50E+00	1.98E+07	3.96E+09	1.03E+07	1.28E+07	1.77E-06	0.0000E+00
3.00E+00	3.08E+04	3.01E+08	1.60E+04	1.98E+04	3.05E-06	0.0000E+00
4.00E+00	2.04E-11	2.32E+07	1.62E-11	1.39E-11	1.00E-05	0.0000E+00
5.00E+00	0.00E+00	7.77E+06	0.00E+00	0.00E+00	3.00E-05	0.0000E+00
6.50E+00	0.00E+00	3.12E+06	0.00E+00	0.00E+00	1.00E-04	0.0000E+00
8.00E+00	0.00E+00	6.11E+05	0.00E+00	0.00E+00	5.50E-04	0.0000E+00
10.00E+00	0.00E+00	1.30E+05	0.00E+00	0.00E+00	3.00E-03	0.0000E+00
Total	3.8681E+12	2.6256E+15	2.0177E+12	2.4845E+12	1.70E-02	0.0000E+00
N/A	N/A	N/A	N/A	N/A	1.00E-01	0.0000E+00
N/A	N/A	N/A	N/A	N/A	4.00E-01	8.68E+06
N/A	N/A	N/A	N/A	N/A	9.00E-01	4.44E+07
N/A	N/A	N/A	N/A	N/A	1.40E+00	4.07E+07
N/A	N/A	N/A	N/A	N/A	1.85E+00	3.02E+07
N/A	N/A	N/A	N/A	N/A	3.00E+00	5.40E+07
N/A	N/A	N/A	N/A	N/A	6.43E+00	4.84E+07
N/A	N/A	N/A	N/A	N/A	20.00E+00	4.24E+06
N/A	N/A	N/A	N/A	N/A	Total	2.3062E+08

SOURCE: CRWMS M&O 1999a, Attachment IV, PWR.gamma.source and PWR.neutron.source files.
NOTE: Initial ^{235}U weight percent of 4.0; average burnup of 48 GWd/MTU; and decay time of 21 years (See Assumption 3.3).

5.2 DESCRIPTION OF CALCULATIONS

5.2.1 Selection of Source Terms

This calculation provides surface dose rates for a 21-PWR WP that contains SNF with radiation source terms with the following burnup and decay characteristics:

- 5.5-wt% initial ^{235}U enrichment, 75.0-GWd/MTU burnup, and 5-year decay time. Surface dose rates for the WP without the basket assembly inside are also calculated.

- 5.5-wt% initial ^{235}U enrichment, 75.0-GWd/MTU burnup, and 5-year decay time for the active fuel region, and 0.711-wt% initial enrichment, 75.0 GWd/MTU burnup, and 5-year decay time for the hardware regions. Since for a given time and burnup the activation of the hardware regions increases with decreasing initial fuel enrichment, this hypothetical SNF provides upper limits for dose rates due to the hardware source.

- 4.0-wt% initial ^{235}U enrichment, 48-GWd/MTU burnup, and 21-year decay time. The SNF with these characteristics provides conservative dose rate estimations for the average PWR SNF (see Assumption 3.3). Surface dose rates for a WP containing average SNF are useful for estimating the radiation exposure of the surrounding equipment.

5.2.2 Geometric Representation of the Source Regions

The PWR SNF assemblies contain four distinct source regions: a bottom end-fitting region, an active fuel region, a plenum region, and a top end-fitting region. Each assembly region is homogenized inside its volume (see Figures 1 through 3), resulting in a uniform distribution of the region contents and radiation source inside the region volume (See Assumption 3.2). The study of source geometry effect (CRWMS M&O 1998b) on the surface dose rates for a WP containing 21 PWR SNF assemblies has shown that the detailed representation of the SNF assemblies and the assemblies homogenized inside their transverse dimensions give essentially the same surface dose rates. The MCNP input file specifies these four gamma sources through source distribution numbers dependent on geometric cells. Attachment II provides the fraction of gamma sampling in each assembly region, required by the source probability (sp) card, and the total gamma source intensity, required by the tally multiplier (fm) card.

5.2.3 Material Specification in the MCNP Input

MCNP requires element/isotope compositions of the materials either as weight fractions or atomic densities. The material compositions of the assembly regions are entered as atomic densities, in atoms/b·cm, in the MCNP input. Atomic density (AD) is calculated according to the following equation (Harmon et al. 1994, Appendix B):

$$AD\ (\text{atoms/b}\cdot\text{cm}) = \frac{\text{mass}_{\text{isotope}}(\text{g}) * N_A(\text{atoms/mole})}{10^{24}(\text{b/cm}^2) * \text{volume}_{\text{region}}(\text{cm}^3) * \text{atomic mass}_{\text{isotope}}(\text{g/mole})} \quad \text{(Eq. 1)}$$

In the above equation, N_A is the Avogadro constant, whose value is 6.0221367E+23 atoms per mole (Parrington et al. 1996, page 59). The element or isotope atomic masses are provided in Parrington et al. 1996. The calculation of the atomic densities for each assembly region is presented in Attachment I.

The isotopic composition, in weight percent, for commercially available enriched uranium is calculated according to the following equations (Bowman et al. 1995, page 20):

$$\text{wt\% } ^{234}U = 0.007731(\text{wt\% } ^{235}U)^{1.0837}$$

$$\text{wt\% } ^{236}U = 0.0046(\text{wt\% } ^{235}U) \quad \text{(Eq. 2)}$$

$$\text{wt\% } ^{238}U = 100 - (\text{wt\% } ^{234}U) - (\text{wt\% } ^{235}U) - (\text{wt\% } ^{236}U)$$

5.2.4 Calculation of the Total Dose Rate

MCNP estimates the gamma or the neutron flux averaged over a surface, and then calculates the surface dose rates in rem/h. The surface dose rate for a certain energy group is the product of group flux and the flux-to-dose rate conversion factor for the energy group (Briesmeister 1997, pages H-5 and H-6).

Since MCNP performs the photon and neutron transport in two separate runs, the total dose rate is the sum of gamma and neutron dose rates. The estimated relative error of the total dose rate is derived from the estimated variance of the total dose rate. The estimated variance of the total dose rate, S^2_{total}, is the sum of the estimated variances of the individual dose rates, S_i^2. The estimated relative error (Briesmeister 1997, p. 2-93) is given by:

$$DR_{total} = DR_{gamma} + DR_{neutron} \quad \text{(Eq. 3)}$$

$$S^2_{total} = S^2_{gamma} + S^2_{neutron} \quad \text{(Eq. 4)}$$

$$R = \frac{\sqrt{S^2_{total}}}{DR_{total}} \quad \text{(Eq. 5)}$$

where

DR = estimated dose rate (rem/h)
S^2 = estimated variance $(rem/h)^2$
R = estimated relative error

5.2.5 Segments Selected for Surface Dose Rate Calculations

Surface dose rates are calculated for the radial, top, and bottom directions of the WP. For each direction, dose rates are determined for segments (see Figures 4, 5, and 6) of the following five surfaces: inner surface of the inner shell, inner surface of the outer shell, WP outer surface, and surfaces at 1 m and 2 m from WP outer surface. Segments 1 to 9 are subdivisions of the five radial surfaces. Segment 1, 37.8125-cm tall, corresponds to the void region above fuel assemblies. Segment 2, 20.1803-cm tall, corresponds to the top end-fitting region. Segment 3, 30.1752-cm tall, corresponds to the plenum region. Five segments, Segments 4 to 8, each 72.0344-cm tall, are equal segments of the active fuel region. The last axial segment, Segment 9, 10.16-cm tall, corresponds to the bottom end-fitting region. The top surface of the WP cavity has six segments, Segments 14 to 19, as shown in Figure 5. Figure 6 shows the four segments, Segments 14, 20, 21, and 22, of the bottom surface of the upper outer lid. The bottom surface of the WP cavity, and the bottom surface of the lower inner lid are divided in two segments by a 20-cm radius. The WP top and bottom surfaces and the top and bottom surfaces 1 m from the WP have three segments: Segments 10 to 12. The top and bottom surfaces 2 m from the WP have also three segments: Segments 10, 11, and 13.

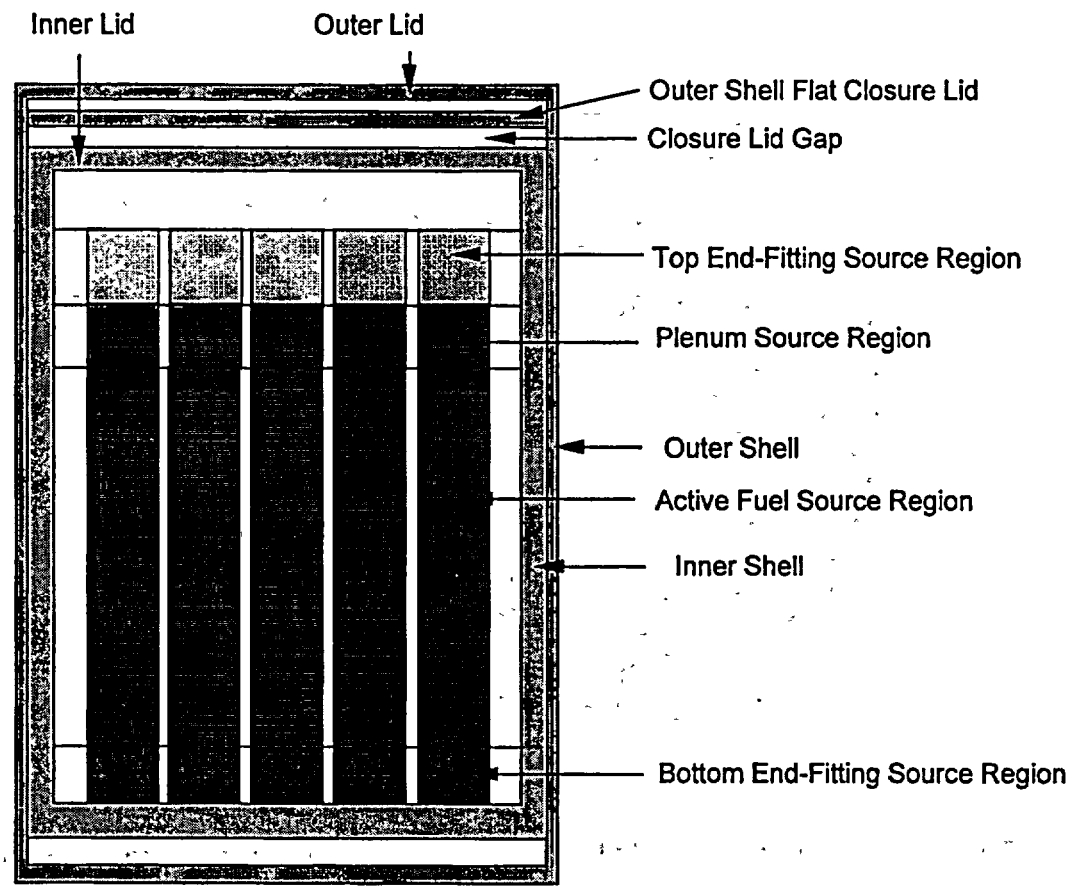

NOTE: Drawing not to scale.

Figure 1. Source Region Representation in MCNP Calculations

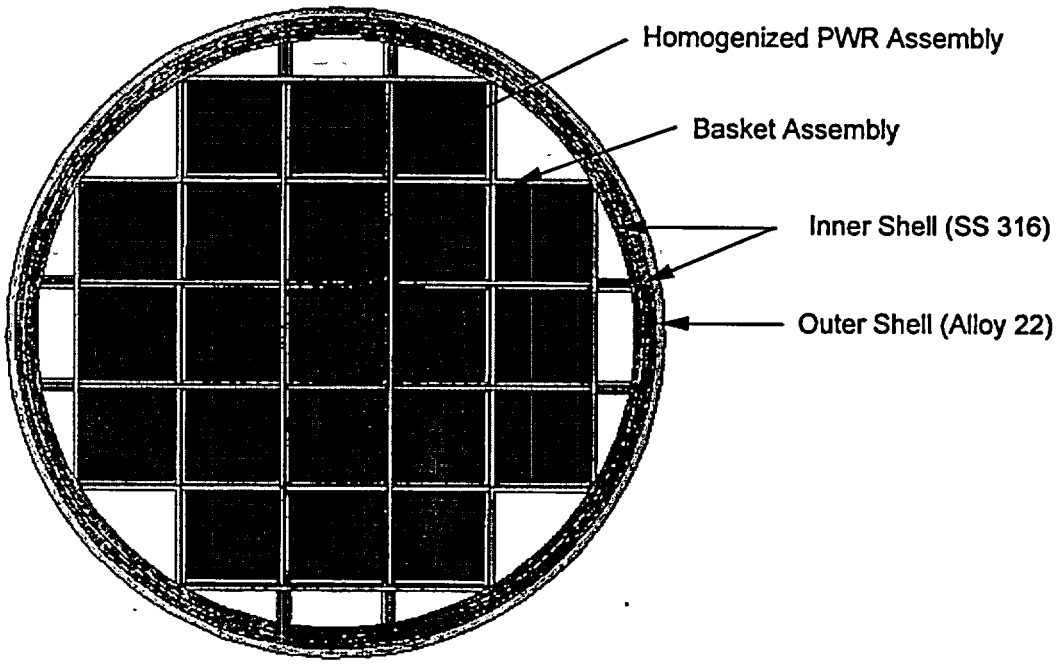

NOTE: The extra-cell shown for the inner shell has been created for geometric importance sampling in MCNP.

Figure 2. Lateral View of WP with Basket Assembly for MCNP Calculations

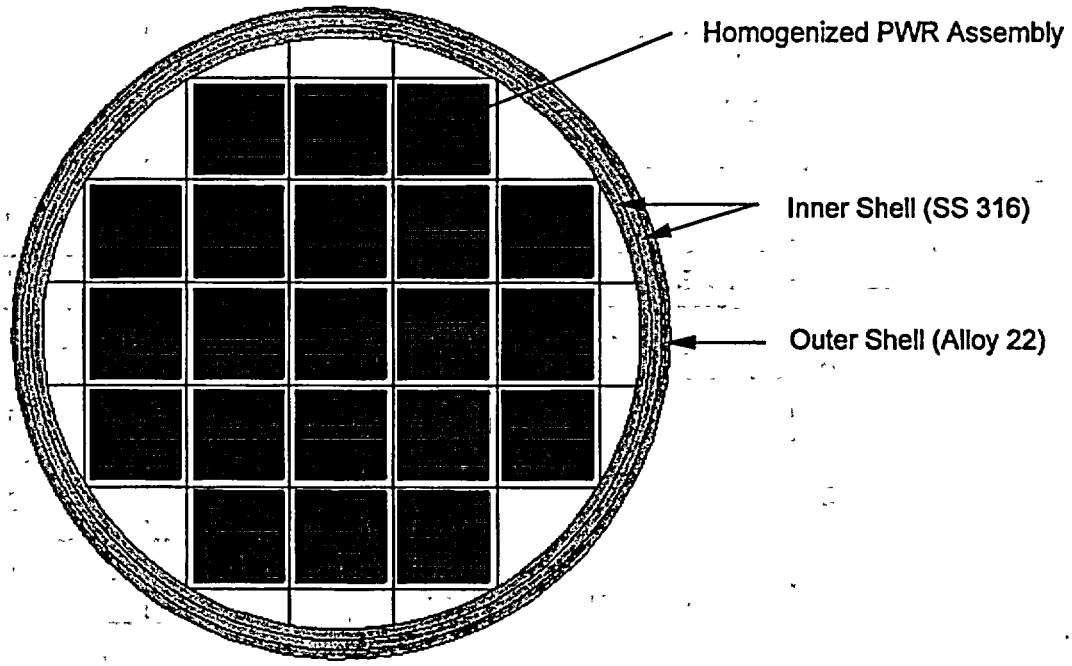

NOTE: The extra-cell shown for the inner shell has been created for geometric importance sampling in MCNP.

Figure 3. Lateral View of WP Without Basket Assembly for MCNP Calculations

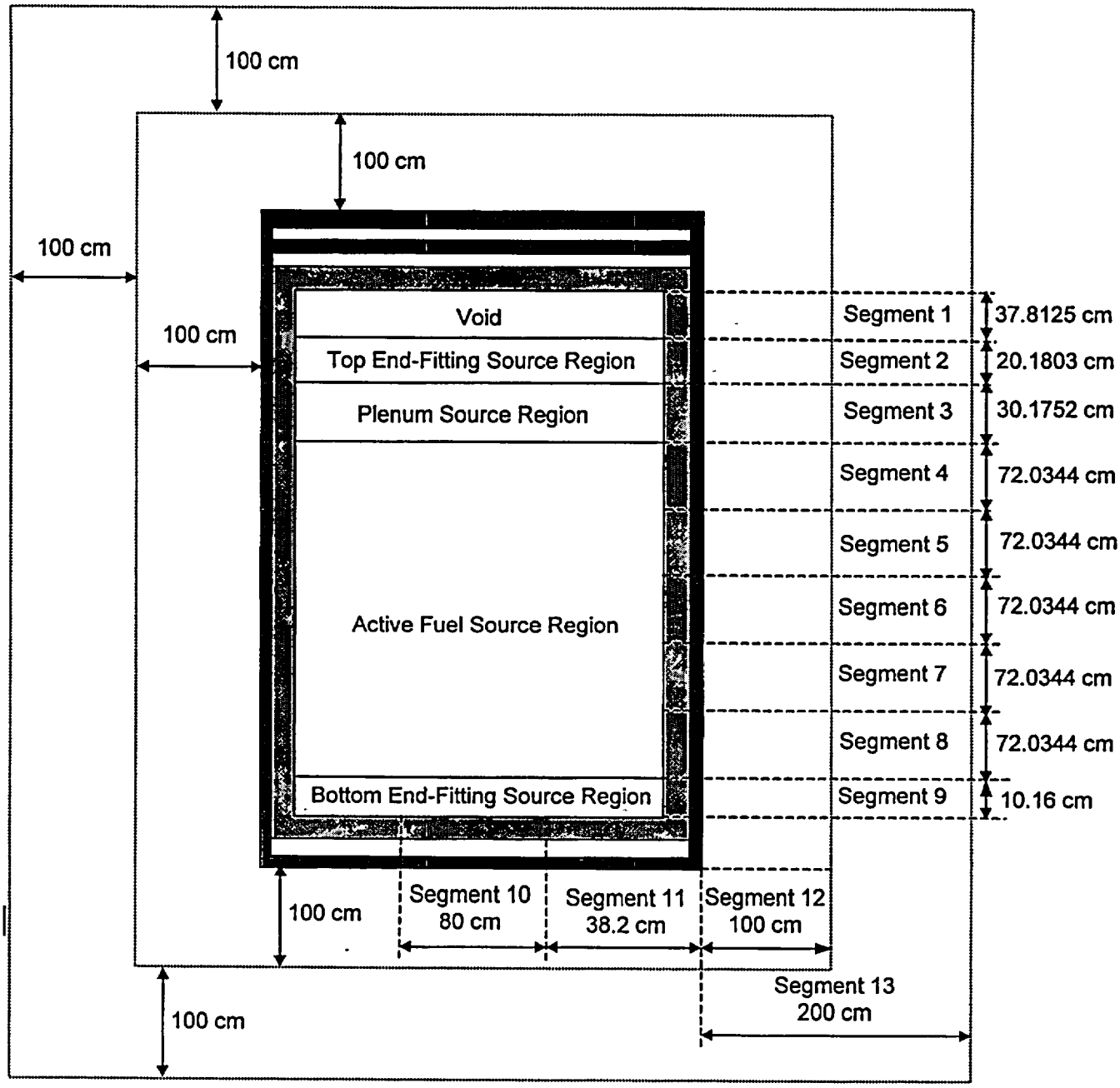

NOTES: [a] Drawing not to scale.
[b] The segments used in dose calculations for the top surface of the WP cavity and bottom surface of the outer top lid are presented in Figures 5 and 6.

Figure 4. Surface Segments Used for Dose Rate Calculations

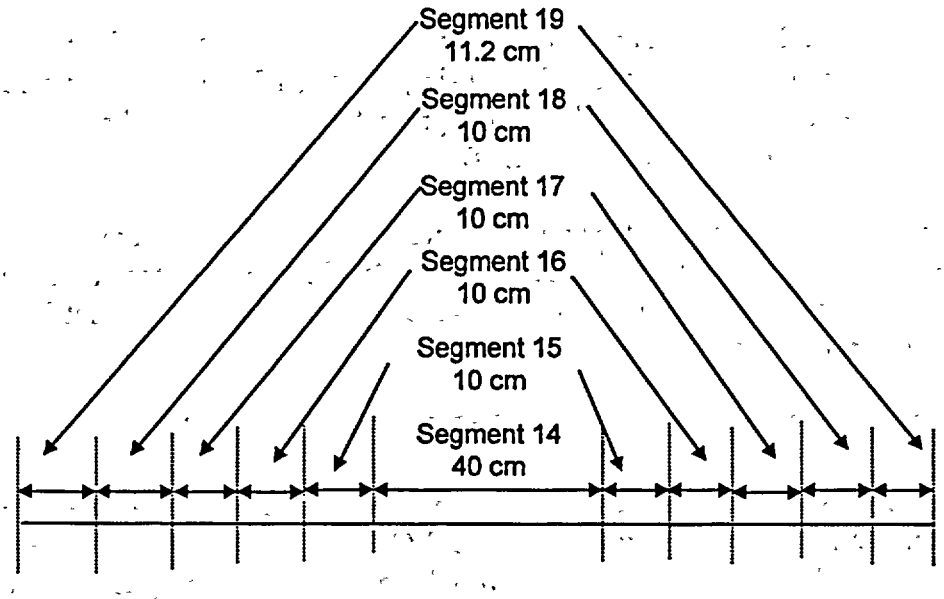

NOTE: Drawing not to scale.

Figure 5. Segments of the Top Surface of the WP Cavity Used in Dose Rate Calculations

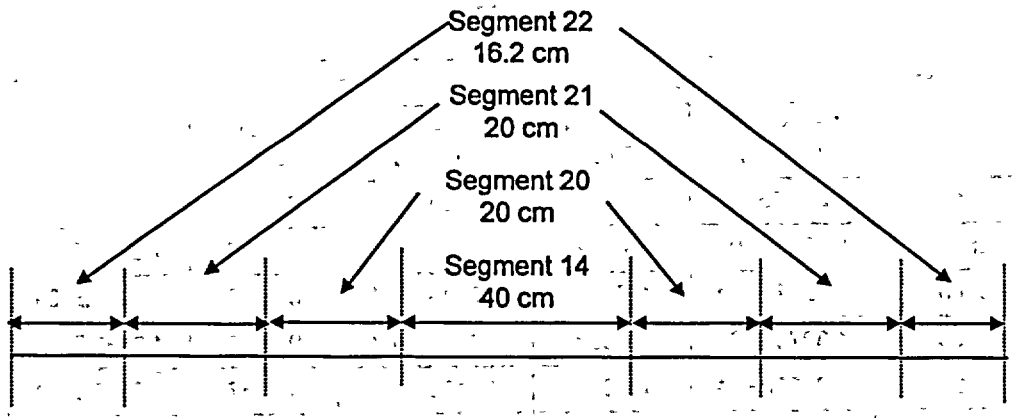

NOTE: Drawing not to scale.

Figure 6. Segments of the Bottom Surface of the Top Outer Lid Used in Dose Rate Calculations

6. RESULTS

The tables included in this section present the gamma and neutron surface dose rates calculated by MCNP, the total surface dose rates calculated using Equation 3, and its associated relative error calculated using Equations 4 and 5. The results presented in Tables 17 through 40 are based on unqualified information (radiation source terms) that requires confirmation.

This document may be affected by technical product input information that requires confirmation. Any changes to the document that may occur as a result of completing the confirmation activities will be reflected in subsequent revisions. The status of the technical product input information quality may be confirmed by review of the DIRS database.

6.1 BOUNDING SOURCE FOR THE ACTIVE FUEL REGION

This section presents surface dose rates for the WP containing 21 PWR SNF assemblies with the following characteristics: 5.5-wt% initial ^{235}U, 75.0-GWd/MTU burnup, and a 5-year decay time. The source term for the PWR SNF assembly with these burnup and decay characteristics generates conservative (higher) surface dose rates only for the active fuel region.

6.1.1 Basket Assembly Inside the WP

Tables 17 through 22 present surface dose rates averaged over segments of the radial and axial surfaces of the 21-PWR WP (see Figures 4, 5, and 6 for segment locations). The WP contains the basket assembly.

Table 17. Dose Rates on the Inner Surface of the Inner Shell: Bounding PWR SNF

Axial Location	Gamma[a]		Neutron[b]		Total	
	Dose Rate (rem/h)	Relative Error	Dose Rate (rem/h)	Relative Error	Dose Rate (rem/h)	Relative Error
Segment 1	6.5877E+03	0.0331	7.3385E+00	0.0137	6.5950E+03	0.0331
Segment 2	1.5935E+04	0.0267	1.2722E+01	0.0136	1.5947E+04	0.0267
Segment 3	2.2217E+04	0.0190	2.3748E+01	0.0089	2.2241E+04	0.0190
Segment 4	4.3278E+04	0.0083	5.3964E+01	0.0043	4.3332E+04	0.0083
Segment 5	4.6468E+04	0.0080	6.7436E+01	0.0037	4.6536E+04	0.0080
Segment 6	4.6887E+04	0.0080	6.8477E+01	0.0037	4.6955E+04	0.0080
Segment 7	4.4414E+04	0.0081	6.7377E+01	0.0037	4.4481E+04	0.0081
Segment 8	4.6216E+04	0.0080	5.4960E+01	0.0042	4.6271E+04	0.0080
Segment 9	3.0339E+04	0.0252	2.9516E+01	0.0122	3.0369E+04	0.0252

Table 18. Dose Rates on the Inner Surface of the Outer Shell: Bounding PWR SNF

Axial Location	Gamma		Neutron		Total	
	Dose Rate (rem/h)	Relative Error	Dose Rate (rem/h)	Relative Error	Dose Rate (rem/h)	Relative Error
Segment 1	6.3766E+02	0.0436	3.3658E+00	0.0169	6.4103E+02	0.0434
Segment 2	1.7493E+03	0.0375	6.0258E+00	0.0179	1.7553E+03	0.0374
Segment 3	1.9677E+03	0.0271	1.1578E+01	0.0111	1.9793E+03	0.0269
Segment 4	3.3709E+03	0.0121	2.6628E+01	0.0050	3.3975E+03	0.0120
Segment 5	3.5530E+03	0.0118	3.3158E+01	0.0044	3.5861E+03	0.0117
Segment 6	3.5251E+03	0.0118	3.3669E+01	0.0043	3.5588E+03	0.0117
Segment 7	3.3951E+03	0.0121	3.3005E+01	0.0044	3.4281E+03	0.0120
Segment 8	3.6357E+03	0.0118	2.7356E+01	0.0049	3.6630E+03	0.0117
Segment 9	2.7274E+03	0.0384	1.3997E+01	0.0167	2.7414E+03	0.0382

Table 19. Dose Rates on the WP Outer Radial Surface: Bounding PWR SNF

Axial Location	Gamma		Neutron		Total	
	Dose Rate (rem/h)	Relative Error	Dose Rate (rem/h)	Relative Error	Dose Rate (rem/h)	Relative Error
Segment 1	2.1261E+02	0.0480	1.4306E+00	0.0166	2.1404E+02	0.0477
Segment 2	6.0833E+02	0.0425	2.6056E+00	0.0188	6.1093E+02	0.0423
Segment 3	6.3316E+02	0.0315	5.1482E+00	0.0108	6.3831E+02	0.0312
Segment 4	9.8058E+02	0.0147	1.2046E+01	0.0047	9.9263E+02	0.0145
Segment 5	1.0388E+03	0.0143	1.4862E+01	0.0042	1.0537E+03	0.0141
Segment 6	1.0239E+03	0.0142	1.5137E+01	0.0041	1.0390E+03	0.0140
Segment 7	9.8414E+02	0.0146	1.4905E+01	0.0042	9.9904E+02	0.0144
Segment 8	1.0699E+03	0.0144	1.2318E+01	0.0046	1.0822E+03	0.0142
Segment 9	8.9412E+02	0.0439	6.0482E+00	0.0158	9.0017E+02	0.0436

Table 20. Dose Rates on a Radial Surface 1 m from the WP: Bounding PWR SNF

Axial Location	Gamma		Neutron		Total	
	Dose Rate (rem/h)	Relative Error	Dose Rate (rem/h)	Relative Error	Dose Rate (rem/h)	Relative Error
Segment 1	1.2649E+02	0.0249	1.2212E+00	0.0094	1.2771E+02	0.0247
Segment 2	1.7489E+02	0.0255	1.6506E+00	0.0106	1.7654E+02	0.0253
Segment 3	2.2713E+02	0.0195	2.1220E+00	0.0075	2.2925E+02	0.0193
Segment 4	3.1085E+02	0.0122	3.0847E+00	0.0039	3.1393E+02	0.0121
Segment 5	3.5970E+02	0.0109	4.0257E+00	0.0033	3.6373E+02	0.0108
Segment 6	3.6800E+02	0.0108	4.3073E+00	0.0032	3.7231E+02	0.0107
Segment 7	3.6075E+02	0.0112	4.0280E+00	0.0033	3.6478E+02	0.0111
Segment 8	2.9843E+02	0.0128	3.0013E+00	0.0039	3.0143E+02	0.0127
Segment 9	2.1134E+02	0.0295	2.1623E+00	0.0127	2.1350E+02	0.0292

Table 21. Dose Rates on a Radial Surface 2 m from the WP: Bounding PWR SNF

Axial Location	Gamma		Neutron		Total	
	Dose Rate (rem/h)	Relative Error	Dose Rate (rem/h)	Relative Error	Dose Rate (rem/h)	Relative Error
Segment 1	8.9559E+01	0.0192	9.5328E-01	0.0078	9.0512E+01	0.0190
Segment 2	1.1168E+02	0.0231	1.1377E+00	0.0095	1.1282E+02	0.0229
Segment 3	1.3414E+02	0.0184	1.3055E+00	0.0072	1.3545E+02	0.0182
Segment 4	1.6863E+02	0.0117	1.6335E+00	0.0041	1.7026E+02	0.0116
Segment 5	2.0085E+02	0.0107	1.9927E+00	0.0036	2.0284E+02	0.0106
Segment 6	2.0818E+02	0.0102	2.1178E+00	0.0035	2.1030E+02	0.0101
Segment 7	2.0032E+02	0.0109	1.9944E+00	0.0036	2.0231E+02	0.0108
Segment 8	1.5763E+02	0.0121	1.5827E+00	0.0041	1.5921E+02	0.0120
Segment 9	1.2258E+02	0.0288	1.3143E+00	0.0123	1.2389E+02	0.0285

Table 22. Dose Rates on Segments of the Axial Surfaces: Bounding PWR SNF

Surface	Segment	Gamma		Neutron		Total	
		Dose Rate (rem/h)	Relative Error	Dose Rate (rem/h)	Relative Error	Dose Rate (rem/h)	Relative Error
Top of the WP cavity (See Figure 5)	Segment 14	1.0287E+04	0.0748	8.9274E+00	0.0357	1.0296E+04	0.0747
	Segment 15	1.1414E+04	0.0681	8.9805E+00	0.0312	1.1423E+04	0.0680
	Segment 16	1.1035E+04	0.0582	8.4184E+00	0.0255	1.1044E+04	0.0582
	Segment 17	7.8592E+03	0.0578	7.7124E+00	0.0220	7.8669E+03	0.0577
	Segment 18	7.4234E+03	0.0594	6.9999E+00	0.0210	7.4304E+03	0.0593
	Segment 19	4.3328E+03	0.0650	6.3164E+00	0.0213	4.3391E+03	0.0649
Bottom of the outer upper lid (See Figure 6)	Segment 14	8.0595E+02	0.1151	4.0465E+00	0.0458	8.1000E+02	0.1145
	Segment 20	9.8864E+02	0.0672	4.0000E+00	0.0286	9.9264E+02	0.0669
	Segment 21	7.2880E+02	0.0584	3.4559E+00	0.0236	7.3226E+02	0.0581
	Segment 22	3.2513E+02	0.0732	2.2543E+00	0.0298	3.2739E+02	0.0727
Top of WP (See Figure 4)	Segment 10	2.9210E+02	0.0698	1.7080E+00	0.0298	2.9381E+02	0.0694
	Segment 11	1.6032E+02	0.0592	1.1328E+00	0.0224	1.6145E+02	0.0588
	Segment 12	6.2105E+01	0.0349	6.2362E-01	0.0111	6.2728E+01	0.0346
1 m from the WP top (See Figure 4)	WP top surface	8.3589E+01	0.0566	3.1502E-01	0.0228	8.3904E+01	0.0564
	Segment 13	2.3050E+01	0.0246	2.9580E-01	0.0075	2.3346E+01	0.0243
2 m from the WP top (See Figure 4)	WP top surface	4.3352E+01	0.0703	1.2710E-01	0.0350	4.3479E+01	0.0701
	Segment 13	1.3830E+01	0.0339	1.4924E-01	0.0099	1.3979E+01	0.0335
Bottom of WP cavity (See Figure 4)	Segment 10	1.1857E+05	0.0189	7.7908E+01	0.0081	1.1864E+05	0.0189
	# Segment 10[a]	6.7493E+04	0.0170	2.5792E+01	0.0081	6.7519E+04	0.0170
Bottom of inner lower lid (See Figure 4)	Segment 10	1.6838E+03	0.0355	1.8015E+01	0.0126	1.7018E+03	0.0351
	# Segment 10[b]	9.4299E+02	0.0285	1.0543E+01	0.0105	9.5353E+02	0.0282
Bottom of WP (See Figures 4 and 6)	Segment 14	3.9305E+02	0.0787	7.8112E+00	0.0278	4.0086E+02	0.0772
	Segment 20	4.6951E+02	0.0485	7.0439E+00	0.0178	4.7656E+02	0.0478
	Segment 11	2.3810E+02	0.0360	4.0395E+00	0.0129	2.4214E+02	0.0354
	Segment 12	1.4410E+02	0.0247	1.7803E+00	0.0075	1.4588E+02	0.0244
Surface 1 m from the WP bottom (See Figure 4)	WP bottom surface	1.2402E+02	0.0347	1.1952E+00	0.0120	1.2521E+02	0.0344
	Segment 13	3.5535E+01	0.0175	6.4069E-01	0.0054	3.6175E+01	0.0172
Surface 2 m from the WP bottom (See Figure 4)	WP bottom surface	5.6697E+01	0.0451	4.6232E-01	0.0185	5.7159E+01	0.0447
	Segment 13	2.1279E+01	0.0229	3.4441E-01	0.0068	2.1623E+01	0.0225

NOTE: [a] The segment outside Segment 10 and delimited by the radius of the WP cavity.
[b] The segment outside Segment 10 and delimited by the inner surface of the outer shell.

6.1.2 No Basket Assembly Inside the WP

Tables 23 through 28 present surface dose rates averaged over segments of the radial and axial surfaces of the 21-PWR WP (see Figures 4, 5, and 6 for segment locations). The WP basket assembly is neglected.

Table 23. Dose Rates on the Inner Surface of the Inner Shell: Bounding PWR SNF, No Basket

Axial Location	Gamma		Neutron		Total	
	Dose Rate (rem/h)	Relative Error	Dose Rate (rem/h)	Relative Error	Dose Rate (rem/h)	Relative Error
Segment 1	2.8472E+04	0.0182	1.5853E+01	0.0103	2 8488E+04	0.0182
Segment 2	4.8562E+04	0.0177	2.3317E+01	0.0106	4.8585E+04	0.0177
Segment 3	7.3327E+04	0.0117	3.5146E+01	0.0075	7.3362E+04	0.0117
Segment 4	1.2079E+05	0.0056	7.0632E+01	0.0038	1.2086E+05	0.0056
Segment 5	1.2836E+05	0.0055	9.0366E+01	0.0034	1.2845E+05	0.0055
Segment 6	1.2808E+05	0.0055	9.3491E+01	0.0033	1.2817E+05	0.0055
Segment 7	1.2852E+05	0.0055	9.1498E+01	0.0034	1.2861E+05	0.0055
Segment 8	1.1996E+05	0.0055	7.3992E+01	0.0038	1.2004E+05	0.0055
Segment 9	7.8954E+04	0.0173	4.4752E+01	0.0102	7.8999E+04	0.0173

Table 24. Dose Rates on the Inner Surface of the Outer Shell: Bounding PWR SNF, No Basket

Axial Location	Gamma		Neutron		Total	
	Dose Rate (rem/h)	Relative Error	Dose Rate (rem/h)	Relative Error	Dose Rate (rem/h)	Relative Error
Segment 1	2.4730E+03	0.0232	6.6649E+00	0.0134	2.4797E+03	0.0231
Segment 2	4.7447E+03	0.0227	1.0152E+01	0.0144	4.7548E+03	0.0227
Segment 3	6.4571E+03	0.0154	1.5906E+01	0.0096	6.4730E+03	0.0154
Segment 4	9.1288E+03	0.0074	3.3948E+01	0.0045	9.1627E+03	0.0074
Segment 5	9 2883E+03	0.0073	4.3281E+01	0.0040	9.3316E+03	0.0073
Segment 6	9.2021E+03	0.0073	4 4589E+01	0.0039	9.2466E+03	0.0073
Segment 7	9.3455E+03	0.0073	4.3726E+01	0.0039	9.3892E+03	0.0073
Segment 8	9.1127E+03	0.0075	3.5348E+01	0.0044	9.1480E+03	0.0075
Segment 9	7.0661E+03	0.0242	2.0323E+01	0.0139	7.0864E+03	0.0241

Table 25. Dose Rates on the WP Outer Radial Surface: Bounding PWR SNF, No Basket

Axial Location	Gamma		Neutron		Total	
	Dose Rate (rem/h)	Relative Error	Dose Rate (rem/h)	Relative Error	Dose Rate (rem/h)	Relative Error
Segment 1	8.2257E+02	0.0261	2.9195E+00	0.0125	8.2548E+02	0.0260
Segment 2	1.6479E+03	0.0257	4.6997E+00	0.0144	1.6526E+03	0.0256
Segment 3	2.1271E+03	0.0178	7.2166E+00	0.0092	2.1343E+03	0.0177
Segment 4	2.6652E+03	0.0089	1.5606E+01	0.0043	2.6808E+03	0.0088
Segment 5	2.6964E+03	0.0087	1.9876E+01	0.0037	2.7163E+03	0.0086
Segment 6	2.6503E+03	0.0087	2.0218E+01	0.0037	2.6705E+03	0.0086
Segment 7	2.6928E+03	0.0087	1.9979E+01	0.0037	2.7128E+03	0.0086
Segment 8	2.6774E+03	0.0089	1.6290E+01	0.0042	2.6937E+03	0.0088
Segment 9	2.3162E+03	0.0281	9.2463E+00	0.0143	2.3254E+03	0.0280

Table 26. Dose Rates on a Radial Surface 1 m from the WP: Bounding PWR SNF, No Basket

Axial Location	Gamma		Neutron		Total	
	Dose Rate (rem/h)	Relative Error	Dose Rate (rem/h)	Relative Error	Dose Rate (rem/h)	Relative Error
Segment 1	3.9102E+02	0.0141	1.7270E+00	0.0081	3.9275E+02	0.0140
Segment 2	5.1765E+02	0.0148	2.3147E+00	0.0092	5.1996E+02	0.0147
Segment 3	6.4614E+02	0.0118	2.8991E+00	0.0066	6.4904E+02	0.0117
Segment 4	8.4277E+02	0.0074	4.1310E+00	0.0035	8.4690E+02	0.0074
Segment 5	9.5402E+02	0.0067	5.3537E+00	0.0030	9.5938E+02	0.0067
Segment 6	9.6447E+02	0.0065	5.7627E+00	0.0029	9.7023E+02	0.0065
Segment 7	9.3652E+02	0.0067	5.3291E+00	0.0030	9.4185E+02	0.0067
Segment 8	7.6794E+02	0.0078	4.0424E+00	0.0035	7.7198E+02	0.0078
Segment 9	5.6561E+02	0.0200	2.9492E+00	0.0112	5.6856E+02	0.0199

Table 27. Dose Rates on a Radial Surface 2 m from the WP: Bounding PWR SNF, No Basket

Axial Location	Gamma		Neutron		Total	
	Dose Rate (rem/h)	Relative Error	Dose Rate (rem/h)	Relative Error	Dose Rate (rem/h)	Relative Error
Segment 1	2.6330E+02	0.0118	1.2983E+00	0.0069	2.6460E+02	0.0117
Segment 2	3.1362E+02	0.0143	1.5311E+00	0.0085	3.1515E+02	0.0142
Segment 3	3.6561E+02	0.0106	1.7514E+00	0.0064	3 6736E+02	0.0105
Segment 4	4.5438E+02	0.0071	2.1981E+00	0.0036	4.5658E+02	0.0071
Segment 5	5.3030E+02	0.0065	2.6713E+00	0.0032	5.3297E+02	0.0065
Segment 6	5.4980E+02	0.0063	2.8228E+00	0.0031	5.5262E+02	0.0063
Segment 7	5.0886E+02	0.0066	2.6505E+00	0.0032	5.1151E+02	0.0066
Segment 8	4.1060E+02	0.0075	2.1368E+00	0.0037	4.1274E+02	0.0075
Segment 9	3.2849E+02	0.0191	1.7882E+00	0.0109	3.3028E+02	0.0190

Table 28. Dose Rates on Segments of the Axial Surfaces: Bounding PWR SNF, No Basket

Surface	Segment	Gamma		Neutron		Total	
		Dose Rate (rem/h)	Relative Error	Dose Rate (rem/h)	Relative Error	Dose Rate (rem/h)	Relative Error
Top of the WP cavity (See Figure 5)	Segment 14	3.6020E+04	0.0415	1.7504E+01	0.0250	3.6037E+04	0.0415
	Segment 15	3.5432E+04	0.0376	1.6693E+01	0.0209	3.5449E+04	0.0376
	Segment 16	3.1165E+04	0.0334	1.5870E+01	0.0170	3.1180E+04	0.0334
	Segment 17	2.6872E+04	0.0314	1.6142E+01	0.0174	2.6889E+04	0.0314
	Segment 18	2.6201E+04	0.0296	1.4995E+01	0.0156	2.6215E+04	0.0296
	Segment 19	2.3091E+04	0.0282	1.4685E+01	0.0139	2.3105E+04	0.0282
Bottom of the outer upper lid (See Figure 6)	Segment 14	3.1671E+03	0.0641	8.8197E+00	0.0398	3.1759E+03	0.0639
	Segment 20	2.9101E+03	0.0370	8.5763E+00	0.0220	2.9186E+03	0.0369
	Segment 21	2.1535E+03	0.0327	7.4794E+00	0.0177	2.1610E+03	0.0326
	Segment 22	1.4723E+03	0.0371	5.4538E+00	0.0214	1.4778E+03	0.0370
Top of WP (See Figure 4)	Segment 10	9.2903E+02	0.0400	3.5739E+00	0.0217	9.3260E+02	0.0398
	Segment 11	5.0145E+02	0.0310	2.6328E+00	0.0155	5.0408E+02	0.0308
	Segment 12	2.4799E+02	0.0210	1.0612E+00	0.0097	2.4905E+02	0.0209
1 m from the WP top (See Figure 4)	WP top surface	2.3184E+02	0.0321	7.1204E-01	0.0162	2.3256E+02	0.0320
	Segment 13	7.7448E+01	0.0142	4.8035E-01	0.0063	7.7928E+01	0.0141
2 m from the WP top (See Figure 4)	WP top surface	1.0479E+02	0.0392	2.9464E-01	0.0244	1.0508E+02	0.0391
	Segment 13	4.6329E+01	0.0193	2.5538E-01	0.0080	4.6584E+01	0.0192
Bottom of WP cavity (See Figure 4)	Segment 10	1.8324E+05	0.0153	1.1248E+02	0.0067	1.8336E+05	0.0153
	# Segment 10[a]	1.0021E+05	0.0142	2.9898E+01	0.0066	1.0024E+05	0.0142
Bottom of inner lower lid (See Figure 4)	Segment 10	2.0679E+03	0.0309	2.2935E+01	0.0113	2.0908E+03	0.0306
	# Segment 10[b]	1.2541E+03	0.0241	1.4183E+01	0.0093	1.2682E+03	0.0238
Bottom of WP (See Figures 4 and 6)	Segment 14	5.8124E+02	0.0721	9.9708E+00	0.0255	5.9121E+02	0.0709
	Segment 20	5.1550E+02	0.0457	9.2230E+00	0.0155	5.2472E+02	0.0449
	Segment 11	3.0678E+02	0.0311	5.4329E+00	0.0106	3.1221E+02	0.0306
	Segment 12	3.7256E+02	0.0154	2.4583E+00	0.0065	3.7501E+02	0.0153
Surface 1 m from the WP bottom (See Figure 4)	WP bottom surface	1.4620E+02	0.0304	1.5652E+00	0.0107	1.4777E+02	0.0301
	Segment 13	7.6153E+01	0.0114	8.7358E-01	0.0048	7.7027E+01	0.0113
Surface 2 m from the WP bottom (See Figure 4)	WP bottom surface	6.6501E+01	0.0396	6.0111E-01	0.0166	6.7102E+01	0.0392
	Segment 13	3.5157E+01	0.0161	4.6829E-01	0.0060	3.5626E+01	0.0159

NOTE: [a] The segment outside Segment 10 and delimited by the radius of the WP cavity.
[b] The segment outside Segment 10 and delimited by the inner surface of the outer shell.

6.2 HYPOTHETICAL BOUNDING SOURCE

Tables 29 through 34 present surface dose rates averaged over segments of the WP radial and axial surfaces for a hypothetical PWR SNF (see Figures 4, 5, and 6 for segment locations). The source terms have the following characteristics: 5.5-wt% initial ^{235}U, 75.0-GWd/MTU burnup, and a 5-year decay time for the active fuel, and 0.711-wt% initial ^{235}U, 75.0-GWd/MTU burnup, and a 5-year decay time for the hardware. These source terms generate conservative (higher) surface dose rates for the hardware regions. The WP contains the basket assembly inside.

Table 29. Dose Rates on the Inner Surface of the Inner Shell: Hypothetical PWR SNF

Axial Location	Gamma		Neutron		Total	
	Dose Rate (rem/h)	Relative Error	Dose Rate (rem/h)	Relative Error	Dose Rate (rem/h)	Relative Error
Segment 1	1.0820E+04	0.0256	7.3385E+00	0.0137	1.0828E+04	0.0256
Segment 2	2.3793E+04	0.0212	1.2722E+01	0.0136	2.3805E+04	0.0212
Segment 3	2.9800E+04	0.0165	2.3748E+01	0.0089	2.9824E+04	0.0165
Segment 4	4.3890E+04	0.0083	5.3964E+01	0.0043	4.3944E+04	0.0083
Segment 5	4.6422E+04	0.0080	6.7436E+01	0.0037	4.6490E+04	0.0080
Segment 6	4.6849E+04	0.0081	6.8477E+01	0.0037	4.6917E+04	0.0081
Segment 7	4.4453E+04	0.0081	6.7377E+01	0.0037	4.4520E+04	0.0081
Segment 8	4.7264E+04	0.0079	5.4960E+01	0.0042	4.7319E+04	0.0079
Segment 9	3.9690E+04	0.0221	2.9516E+01	0.0122	3.9720E+04	0.0221

Table 30. Dose Rates on the Inner Surface of the Outer Shell: Hypothetical PWR SNF

Axial Location	Gamma		Neutron		Total	
	Dose Rate (rem/h)	Relative Error	Dose Rate (rem/h)	Relative Error	Dose Rate (rem/h)	Relative Error
Segment 1	1.0476E+03	0.0347	3.3658E+00	0.0169	1.0509E+03	0.0346
Segment 2	2.7438E+03	0.0300	6.0258E+00	0.0179	2.7498E+03	0.0299
Segment 3	2.8639E+03	0.0230	1.1578E+01	0.0111	2.8754E+03	0.0229
Segment 4	3.4319E+03	0.0121	2.6628E+01	0.0050	3.4585E+03	0.0120
Segment 5	3.5528E+03	0.0118	3.3158E+01	0.0044	3.5860E+03	0.0117
Segment 6	3.5222E+03	0.0118	3.3669E+01	0.0043	3.5559E+03	0.0117
Segment 7	3.3986E+03	0.0121	3.3005E+01	0.0044	3.4316E+03	0.0120
Segment 8	3.7543E+03	0.0117	2.7356E+01	0.0049	3.7817E+03	0.0116
Segment 9	3.8148E+03	0.0335	1.3997E+01	0.0167	3.8288E+03	0.0334

Table 31. Dose Rates on the WP Outer Radial Surface: Hypothetical PWR SNF

Axial Location	Gamma		Neutron		Total	
	Dose Rate (rem/h)	Relative Error	Dose Rate (rem/h)	Relative Error	Dose Rate (rem/h)	Relative Error
Segment 1	3.4524E+02	0.0387	1.4306E+00	0.0166	3.4667E+02	0.0385
Segment 2	9.6981E+02	0.0341	2.6056E+00	0.0188	9.7242E+02	0.0340
Segment 3	9.3571E+02	0.0266	5.1482E+00	0.0108	9.4085E+02	0.0265
Segment 4	1.0013E+03	0.0147	1.2046E+01	0.0047	1.0134E+03	0.0145
Segment 5	1.0398E+03	0.0143	1.4862E+01	0.0042	1.0546E+03	0.0141
Segment 6	1.0235E+03	0.0142	1.5137E+01	0.0041	1.0386E+03	0.0140
Segment 7	9.8526E+02	0.0146	1.4905E+01	0.0042	1.0002E+03	0.0144
Segment 8	1.1113E+03	0.0142	1.2318E+01	0.0046	1.1236E+03	0.0140
Segment 9	1.2847E+03	0.0385	6.0482E+00	0.0158	1.2908E+03	0.0383

Table 32. Dose Rates on a Radial Surface 1 m from the WP: Hypothetical PWR SNF

Axial Location	Gamma		Neutron		Total	
	Dose Rate (rem/h)	Relative Error	Dose Rate (rem/h)	Relative Error	Dose Rate (rem/h)	Relative Error
Segment 1	1.6773E+02	0.0218	1.2212E+00	0.0094	1.6895E+02	0.0216
Segment 2	2.2517E+02	0.0238	1.6506E+00	0.0106	2.2682E+02	0.0236
Segment 3	2.7372E+02	0.0182	2.1220E+00	0.0075	2.7584E+02	0.0181
Segment 4	3.3980E+02	0.0118	3.0847E+00	0.0039	3.4289E+02	0.0117
Segment 5	3.6648E+02	0.0109	4.0257E+00	0.0033	3.7050E+02	0.0108
Segment 6	3.7057E+02	0.0108	4.3073E+00	0.0032	3.7487E+02	0.0107
Segment 7	3.6630E+02	0.0111	4.0280E+00	0.0033	3.7033E+02	0.0110
Segment 8	3.1454E+02	0.0127	3.0013E+00	0.0039	3.1754E+02	0.0126
Segment 9	2.3131E+02	0.0288	2.1623E+00	0.0127	2.3347E+02	0.0285

Table 33. Dose Rates on a Radial Surface 2 m from the WP: Hypothetical PWR SNF

Axial Location	Gamma		Neutron		Total	
	Dose Rate (rem/h)	Relative Error	Dose Rate (rem/h)	Relative Error	Dose Rate (rem/h)	Relative Error
Segment 1	1.0543E+02	0.0183	9.5328E-01	0.0078	1.0639E+02	0.0181
Segment 2	1.3069E+02	0.0220	1.1377E+00	0.0095	1.3183E+02	0.0218
Segment 3	1.5366E+02	0.0174	1.3055E+00	0.0072	1.5497E+02	0.0173
Segment 4	1.8328E+02	0.0114	1.6335E+00	0.0041	1.8491E+02	0.0113
Segment 5	2.0931E+02	0.0106	1.9927E+00	0.0036	2.1130E+02	0.0105
Segment 6	2.1373E+02	0.0101	2.1178E+00	0.0035	2.1585E+02	0.0100
Segment 7	2.0593E+02	0.0108	1.9944E+00	0.0036	2.0793E+02	0.0107
Segment 8	1.6495E+02	0.0120	1.5827E+00	0.0041	1.6653E+02	0.0119
Segment 9	1.2998E+02	0.0286	1.3143E+00	0.0123	1.3130E+02	0.0283

Table 34. Dose Rates on Segments of the Axial Surfaces: Hypothetical PWR SNF

Surface	Segment	Gamma		Neutron		Total	
		Dose Rate (rem/h)	Relative Error	Dose Rate (rem/h)	Relative Error	Dose Rate (rem/h)	Relative Error
Top of the WP cavity (See Figure 5)	Segment 14	1.6939E+04	0.0590	8.9274E+00	0.0357	1.6948E+04	0.0590
	Segment 15	1.8944E+04	0.0527	8.9805E+00	0.0312	1.8953E+04	0.0527
	Segment 16	1.8202E+04	0.0444	8.4184E+00	0.0255	1.8210E+04	0.0444
	Segment 17	1.3169E+04	0.0463	7.7124E+00	0.0220	1.3177E+04	0.0463
	Segment 18	1.2351E+04	0.0485	6.9999E+00	0.0210	1.2358E+04	0.0485
	Segment 19	7.2536E+03	0.0531	6.3164E+00	0.0213	7.2599E+03	0.0531
Bottom of the outer upper lid (See Figure 6)	Segment 14	1.3209E+03	0.0901	4.0465E+00	0.0458	1.3249E+03	0.0898
	Segment 20	1.6123E+03	0.0519	4.0000E+00	0.0286	1.6163E+03	0.0518
	Segment 21	1.1904E+03	0.0463	3.4559E+00	0.0236	1.1939E+03	0.0462
	Segment 22	5.6902E+02	0.0593	2.2543E+00	0.0298	5.7127E+02	0.0591
Top of WP (See Figure 4)	Segment 10	4.7389E+02	0.0555	1.7080E+00	0.0298	4.7560E+02	0.0553
	Segment 11	2.5816E+02	0.0460	1.1328E+00	0.0224	2.5929E+02	0.0458
	Segment 12	9.0831E+01	0.0298	6.2362E-01	0.0111	9.1454E+01	0.0296
1 m from the WP top (See Figure 4)	WP top surface	1.3174E+02	0.0450	3.1502E-01	0.0228	1.3205E+02	0.0449
	Segment 13	3.3052E+01	0.0218	2.9580E-01	0.0075	3.3348E+01	0.0216
2 m from the WP top (See Figure 4)	WP top surface	6.7609E+01	0.0575	1.2710E-01	0.0350	6.7736E+01	0.0574
	Segment 13	2.1250E+01	0.0289	1.4924E-01	0.0099	2.1399E+01	0.0287
Bottom of WP cavity (See Figure 4)	Segment 10	1.8666E+05	0.0159	7.7908E+01	0.0081	1.8674E+05	0.0159
	# Segment 10[a]	1.0610E+05	0.0141	2.5792E+01	0.0081	1.0613E+05	0.0141
Bottom of inner lower lid (See Figure 4)	Segment 10	2.5715E+03	0.0289	1.8015E+01	0.0126	2.5895E+03	0.0287
	# Segment 10[b]	1.4798E+03	0.0232	1.0543E+01	0.0105	1.4903E+03	0.0230
Bottom of WP (See Figures 4 and 6)	Segment 14	6.1087E+02	0.0663	7.8112E+00	0.0278	6.1868E+02	0.0655
	Segment 20	7.2222E+02	0.0391	7.0439E+00	0.0178	7.2927E+02	0.0387
	Segment 11	3.7737E+02	0.0293	4.0395E+00	0.0129	3.8141E+02	0.0290
	Segment 12	1.6716E+02	0.0239	1.7803E+00	0.0075	1.6894E+02	0.0236
Surface 1 m from the WP bottom (See Figure 4)	WP bottom surface	1.9024E+02	0.0285	1.1952E+00	0.0120	1.9143E+02	0.0283
	Segment 13	4.4843E+01	0.0161	6.4069E-01	0.0054	4.5484E+01	0.0159
Surface 2 m from the WP bottom (See Figure 4)	WP bottom surface	8.6245E+01	0.0374	4.6232E-01	0.0185	8.6707E+01	0.0372
	Segment 13	3.0210E+01	0.0201	3.4441E-01	0.0068	3.0555E+01	0.0199

NOTE: [a] The segment outside Segment 10 and delimited by the radius of the WP cavity.
[b] The segment outside Segment 10 and delimited by the inner surface of the outer shell.

6.3 AVERAGE SOURCE

Tables 35 through 40 present surface dose rates averaged over segments of radial and axial surfaces of the WP containing the PWR SNF with the following characteristics: 4.0-wt% initial ^{235}U, 48.0-GWd/MTU burnup, and a 21-year decay time (see Figures 4, 5, and 6 for segment locations). The WP contains the basket assembly inside.

Table 35. Dose Rates on the Inner Surface of the Inner Shell: Average PWR SNF

Axial Location	Gamma		Neutron		Total	
	Dose Rate (rem/h)	Relative Error	Dose Rate (rem/h)	Relative Error	Dose Rate (rem/h)	Relative Error
Segment 1	6.4071E+02	0.0381	1.1672E+00	0.0143	6.4187E+02	0.0380
Segment 2	1.7478E+03	0.0287	2.0171E+00	0.0138	1.7498E+03	0.0287
Segment 3	3.2348E+03	0.0172	3.7777E+00	0.0091	3.2385E+03	0.0172
Segment 4	8.6028E+03	0.0062	8.4802E+00	0.0043	8.6112E+03	0.0062
Segment 5	9.4102E+03	0.0061	1.0393E+01	0.0038	9.4206E+03	0.0061
Segment 6	9.5141E+03	0.0061	1.0622E+01	0.0038	9.5247E+03	0.0061
Segment 7	9.0752E+03	0.0062	1.0378E+01	0.0038	9.0856E+03	0.0062
Segment 8	9.2268E+03	0.0061	8.6192E+00	0.0043	9.2354E+03	0.0061
Segment 9	4.7992E+03	0.0227	4.6195E+00	0.0125	4.8038E+03	0.0227

Table 36. Dose Rates on the Inner Surface of the Outer Shell: Average PWR SNF

Axial Location	Gamma		Neutron		Total	
	Dose Rate (rem/h)	Relative Error	Dose Rate (rem/h)	Relative Error	Dose Rate (rem/h)	Relative Error
Segment 1	6.3278E+01	0.0508	5.2729E-01	0.0181	6.3805E+01	0.0504
Segment 2	1.6628E+02	0.0422	9.3010E-01	0.0184	1.6721E+02	0.0420
Segment 3	2.5671E+02	0.0252	1.8145E+00	0.0114	2.5852E+02	0.0250
Segment 4	6.1094E+02	0.0092	4.2068E+00	0.0051	6.1514E+02	0.0091
Segment 5	6.5053E+02	0.0089	5.1237E+00	0.0046	6.5566E+02	0.0088
Segment 6	6.5587E+02	0.0089	5.2092E+00	0.0045	6.6108E+02	0.0088
Segment 7	6.3421E+02	0.0090	5.1183E+00	0.0046	6.3932E+02	0.0089
Segment 8	6.4939E+02	0.0090	4.2535E+00	0.0051	6.5364E+02	0.0089
Segment 9	3.8586E+02	0.0345	2.1790E+00	0.0166	3.8804E+02	0.0343

Table 37. Dose Rates on the WP Outer Radial Surface: Average PWR SNF

Axial Location	Gamma		Neutron		Total	
	Dose Rate (rem/h)	Relative Error	Dose Rate (rem/h)	Relative Error	Dose Rate (rem/h)	Relative Error
Segment 1	2.1114E+01	0.0569	2.2931E-01	0.0175	2.1344E+01	0.0563
Segment 2	5.8748E+01	0.0489	4.1322E-01	0.0190	5.9161E+01	0.0486
Segment 3	7.8494E+01	0.0297	8.1307E-01	0.0111	7.9307E+01	0.0294
Segment 4	1.6445E+02	0.0112	1.8815E+00	0.0048	1.6633E+02	0.0111
Segment 5	1.7404E+02	0.0107	2.2848E+00	0.0043	1.7632E+02	0.0106
Segment 6	1.7615E+02	0.0107	2.3235E+00	0.0042	1.7847E+02	0.0106
Segment 7	1.7106E+02	0.0108	2.2877E+00	0.0043	1.7334E+02	0.0107
Segment 8	1.7698E+02	0.0108	1.9289E+00	0.0048	1.7890E+02	0.0107
Segment 9	1.1587E+02	0.0413	9.8920E-01	0.0177	1.1686E+02	0.0410

Table 38. Dose Rates on a Radial Surface 1 m from the WP: Average PWR SNF

Axial Location	Gamma		Neutron		Total	
	Dose Rate (rem/h)	Relative Error	Dose Rate (rem/h)	Relative Error	Dose Rate (rem/h)	Relative Error
Segment 1	1.6346E+01	0.0225	1.8969E-01	0.0098	1.6535E+01	0.0222
Segment 2	2.4576E+01	0.0217	2.6074E-01	0.0110	2.4836E+01	0.0215
Segment 3	3.3185E+01	0.0159	3.3109E-01	0.0078	3.3516E+01	0.0157
Segment 4	5.0121E+01	0.0094	4.8259E-01	0.0040	5.0604E+01	0.0093
Segment 5	6.0437E+01	0.0083	6.2404E-01	0.0034	6.1061E+01	0.0082
Segment 6	6.2701E+01	0.0079	6.6373E-01	0.0033	6.3365E+01	0.0078
Segment 7	6.1308E+01	0.0083	6.2190E-01	0.0034	6.1930E+01	0.0082
Segment 8	4.9022E+01	0.0096	4.6804E-01	0.0041	4.9490E+01	0.0095
Segment 9	3.4005E+01	0.0226	3.3621E-01	0.0132	3.4341E+01	0.0224

Table 39. Dose Rates on a Radial Surface 2 m from the WP: Average PWR SNF

Axial Location	Gamma		Neutron		Total	
	Dose Rate (rem/h)	Relative Error	Dose Rate (rem/h)	Relative Error	Dose Rate (rem/h)	Relative Error
Segment 1	1.3229E+01	0.0161	1.4785E-01	0.0082	1.3376E+01	0.0159
Segment 2	1.7257E+01	0.0185	1.7540E-01	0.0100	1.7433E+01	0.0183
Segment 3	2.0562E+01	0.0148	2.0182E-01	0.0075	2.0764E+01	0.0147
Segment 4	2.7365E+01	0.0090	2.5361E-01	0.0042	2.7619E+01	0.0089
Segment 5	3.3287E+01	0.0080	3.0994E-01	0.0037	3.3597E+01	0.0079
Segment 6	3.5288E+01	0.0077	3.2733E-01	0.0036	3.5616E+01	0.0076
Segment 7	3.3287E+01	0.0081	3.0762E-01	0.0038	3.3595E+01	0.0080
Segment 8	2.6232E+01	0.0091	2.4828E-01	0.0043	2.6480E+01	0.0090
Segment 9	1.9513E+01	0.0222	2.0291E-01	0.0130	1.9716E+01	0.0220

Table 40. Dose Rates on Segments of the Axial Surfaces: Average PWR SNF

Surface	Segment	Gamma		Neutron		Total	
		Dose Rate (rem/h)	Relative Error	Dose Rate (rem/h)	Relative Error	Dose Rate (rem/h)	Relative Error
Top of the WP cavity (See Figure 5)	Segment 14	1.2384E+03	0.0791	1.4379E+00	0.0323	1.2398E+03	0.0790
	Segment 15	1.0065E+03	0.0780	1.4738E+00	0.0318	1.0080E+03	0.0779
	Segment 16	1.0838E+03	0.0640	1.3657E+00	0.0271	1.0852E+03	0.0639
	Segment 17	7.6861E+02	0.0817	1.2015E+00	0.0238	7.6982E+02	0.0816
	Segment 18	6.9977E+02	0.0643	1.1801E+00	0.0226	7.0095E+02	0.0642
	Segment 19	4.5093E+02	0.0707	9.5332E-01	0.0233	4.5188E+02	0.0706
Bottom of the outer upper lid (See Figure 6)	Segment 14	1.0557E+02	0.1152	7.0742E-01	0.0528	1.0628E+02	0.1144
	Segment 20	8.7727E+01	0.0795	6.3960E-01	0.0297	8.8366E+01	0.0789
	Segment 21	6.7886E+01	0.0667	5.4583E-01	0.0245	6.8432E+01	0.0662
	Segment 22	3.0679E+01	0.0874	3.6829E-01	0.0320	3.1047E+01	0.0864
Top of WP (See Figure 4)	Segment 10	3.0467E+01	0.0791	2.7165E-01	0.0329	3.0739E+01	0.0784
	Segment 11	1.3836E+01	0.0663	1.7467E-01	0.0211	1.4010E+01	0.0655
	Segment 12	7.1895E+00	0.0351	9.8137E-02	0.0118	7.2877E+00	0.0346
1 m from the WP top (See Figure 4)	WP top surface	8.4382E+00	0.0623	4.8245E-02	0.0238	8.4865E+00	0.0619
	Segment 13	2.7893E+00	0.0230	4.6412E-02	0.0078	2.8357E+00	0.0226
2 m from the WP top (See Figure 4)	WP top surface	4.2112E+00	0.0752	1.9957E-02	0.0362	4.2311E+00	0.0748
	Segment 13	1.5511E+00	0.0335	2.3453E-02	0.0103	1.5745E+00	0.0330
Bottom of WP cavity (See Figure 4)	Segment 10	1.4068E+04	0.0176	1.2052E+01	0.0083	1.4080E+04	0.0176
	# Segment 10[a]	8.0525E+03	0.0161	4.0046E+00	0.0082	8.0565E+03	0.0161
Bottom of inner lower lid (See Figure 4)	Segment 10	1.7072E+02	0.0364	2.8501E+00	0.0131	1.7357E+02	0.0358
	# Segment 10[b]	1.0243E+02	0.0298	1.6737E+00	0.0109	1.0410E+02	0.0293
Bottom of WP (See Figure 4 and 6)	Segment 14	4.2094E+01	0.0889	1.2499E+00	0.0280	4.3344E+01	0.0863
	Segment 20	4.5341E+01	0.0507	1.1318E+00	0.0177	4.6473E+01	0.0495
	Segment 11	2.5198E+01	0.0383	6.2965E-01	0.0126	2.5828E+01	0.0374
	Segment 12	2.1645E+01	0.0198	2.7888E-01	0.0077	2.1924E+01	0.0195
Surface 1 m from the WP bottom (See Figure 4)	WP bottom surface	1.2102E+01	0.0373	1.8850E-01	0.0124	1.2290E+01	0.0367
	Segment 13	4.8586E+00	0.0148	9.9952E-02	0.0056	4.9586E+00	0.0145
Surface 2 m from the WP bottom (See Figure 4)	WP bottom surface	5.5744E+00	0.0493	7.1209E-02	0.0193	5.6456E+00	0.0487
	Segment 13	2.5247E+00	0.0212	5.4372E-02	0.0070	2.5791E+00	0.0208

NOTE: [a] The segment outside Segment 10 and delimited by the radius of the WP cavity.
[b] The segment outside Segment 10 and delimited by the inner surface of the outer shell.

7. REFERENCES

7.1 DOCUMENTS CITED

ASM (American Society for Metals) 1980. *Properties and Selection: Stainless Steels, Tool Materials and Special-Purpose Metals.* Volume 3 of *Metals Handbook.* 9th Edition. Benjamin, D., ed. Metals Park, Ohio: American Society for Metals. TIC: 209801.

Bowman, S.M.; Hermann, O.W.; and Brady, M.C. 1995. *Sequoyah Unit 2 Cycle 3.* Volume 2 of *Scale-4 Analysis of Pressurized Water Reactor Critical Configurations.* ORNL/TM-12294/V2. Oak Ridge, Tennessee: Oak Ridge National Laboratory. TIC: 244397.

Briesmeister, J.F., ed. 1997. *MCNP-A General Monte Carlo N-Particle Transport Code.* LA-12625-M, Version 4B. Los Alamos, New Mexico: Los Alamos National Laboratory. ACC: MOL.19980624.0328.

CRWMS M&O 1998a. *Software Code: MCNP.* 4B2LV. HP. 30033 V4B2LV.

CRWMS M&O 1998b. *Calculation of the Effect of Source Geometry on the 21-PWR WP Dose Rates.* BBAC00000-01717-0210-00004 REV 00. Las Vegas, Nevada: CRWMS M&O. ACC: MOL.19990222.0059.

CRWMS M&O 1999a. *PWR Source Term Generation and Evaluation.* BBAC00000-01717-0210-00010 REV 01. Las Vegas, Nevada: CRWMS M&O. ACC: MOL.20000113.0333.

CRWMS M&O 2000a. *Technical Work Plan for: Waste Package Design Description for SR.* TWP-EBS-MD-000003 REV 00. Las Vegas, Nevada: CRWMS M&O. ACC: MOL.20001107.0366.

CRWMS M&O 2000b. *Waste Packages and Source Terms for the Commercial 1999 Design Basis Waste Streams.* CAL-MGR-MD-000001 REV 00. Las Vegas, Nevada: CRWMS M&O. ACC: MOL.20000214.0479.

DOE (U.S. Department of Energy) 1987. *Appendix 2A. Physical Descriptions of LWR Fuel Assemblies.* Volume 3 of *Characteristics of Spent Fuel, High-Level Waste, and Other Radioactive Wastes Which May Require Long-Term Isolation.* DOE/RW-0184. Washington, D.C.: U.S. Department of Energy, Office of Civilian Radioactive Waste Management. ACC: HQX.19880405.0024.

EPRI (Electric Power Research Institute) 1989. *Testing and Analyses of the TN-24P PWR Spent-Fuel Dry Storage Cask Loaded with Consolidated Fuel.* EPRI NP-6191. Palo Alto, California: Electric Power Research Institute. TIC: 207047.

Harmon, C.D., II; Busch, R.D.; Briesmeister, J.F.; and Forster, R.A. 1994. *Criticality Calculations with MCNP™: A Primer.* LA-12827-M. Los Alamos, New Mexico: Los Alamos National Laboratory. TIC: 234014.

Inco Alloys International 1988. Product Handbook. Huntington, West Virginia: Inco Alloys International, Inc. TIC: 239397.

Kugler, A. 1996. *Bohler Neutronit A976 Sheet and Plate for Nuclear Engineering.* Murzzuschlag, Austria: Bohler Bleche GmbH. TIC: 240558.

Parrington, J.R.; Knox, H.D.; Breneman, S.L.; Baum, E.M.; and Feiner, F. 1996. *Nuclides and Isotopes, Chart of the Nuclides.* 15th Edition. San Jose, California: General Electric Company and KAPL, Inc. TIC: 233705.

7.2 CODES, STANDARDS, REGULATIONS, AND PROCEDURES

AP-3.12Q, Rev. 0, ICN 4. *Calculations.* Washington D.C.: U.S. Department of Energy, Office of Civilian Radioactive Waste Management. ACC: MOL.20010404.0008.

ASME (American Society of Mechanical Engineers) 1998. *1998 ASME Boiler and Pressure Vessel Code.* 1998 Edition with 1999 and 2000 Addenda. New York, New York: American Society of Mechanical Engineers. TIC: 247429.

ASTM A 887-89. 1992. *Standard Specification for Borated Stainless Steel Plate, Sheet, and Strip for Nuclear Application.* Philadelphia, Pennsylvania: ASTM. TIC: 245311.

ASTM B 811-90. 1991. *Standard Specification for Wrought Zirconium Alloy Seamless Tubes for Nuclear Reactor Fuel Cladding.* Philadelphia, Pennsylvania: American Society for Testing and Materials. TIC: 239780.

ASTM G 1-90 (Reapproved 1999). 1990. *Standard Practice for Preparing, Cleaning, and Evaluating Corrosion Test Specimens.* West Conshohocken, Pennsylvania: American Society for Testing and Materials. TIC: 238771.

8. ATTACHMENTS

The attachments of this calculation are listed in Table 41. Electronic output files are provided on a compact disk, and are listed in Table 42. Each output file is identified by its name, size (in bytes), and the date and time of last access. The input files used are echoed in the output files. It should be noted that for files transferred from the HP to the personal computer, the date and time will reflect the time of transfer. The actual date and time of run completion can be found in the file.

Table 41. List of Attachments

Description	Attachment Number	No. of Pages
Atomic density calculation for the homogenized assembly regions	I	8
Total source intensity and source region fractions	II	2
SK-0219 REV 01 21-PWR Waste Package Concept for License Application (selected sheets)	III	10
MCNP electronic output files (compact disk)	IV	N/A

Table 42. File Attributes for the Contents of Electronic Media

File Name	Calculation	File Size (bytes)	File Date	File Time
abg.io	Gamma dose rates for the WP containing the average PWR SNF source	260,341	01/16/2001	2:16 p.m.
abn.io	Neutron dose rates for the WP containing the average PWR SNF source	227,347	01/16/2001	9:56 a.m.
bbg.io	Gamma dose rates for the WP containing bounding PWR SNF source for the active fuel region	256,122	01/16/2001	9:56 a.m.
bbn.io	Neutron dose rates for the WP containing bounding PWR SNF source for the active fuel region	227,821	01/16/2001	9:56 a.m.
b2bg.io	Gamma dose rates for the WP containing the bounding PWR SNF source for the hardware regions	249,736	01/16/2001	9:56 a.m.
bg.io	Gamma dose rates for the WP containing bounding PWR SNF source (basket assembly neglected)	173,658	01/16/2001	9:56 a.m.
bn.io	Neutron dose rates for the WP containing bounding PWR SNF source (basket assembly neglected)	157,007	01/16/2001	9.56 a.m.

NOTE: The MCNP output files listed in the table are text files.

This attachment presents the atomic density calculations for the homogenized assembly regions using Equations 1 and 2 in Section 5.2.3.

1. Bottom End-Fitting Region

Table I-1. Total Mass by Material in the Bottom End-Fitting Region

Component	Material	Mass (kg)
Bottom nozzle	SS CF3M	8.16
Spacer-bottom	Inconel-718	1.3
Lower nut	SS 304	0.15
Total		9.61

Table I-2. Element Mass by Material

SS CF-3M			Inconel-718			SS 304		
Element	wt%	Mass (g)	Element	wt%	Mass (g)	Element	wt%	Mass (g)
C	0.03	2.448	Ni	51.5	669.5	C	0.08	0.12
Mn	1.5	122.4	Cr	19	247	Cr	19	28.5
Si	2	163.2	Fe	17.809	231.517	Ni	9.25	13.875
Cr	19	1550.4	Nb	5.125	66.625	Mn	2	3
Ni	10	816	Mo	3.05	39.65	P	0.045	0.0675
Mo	2.5	204	Ti	0.9	11.7	S	0.03	0.045
Fe	64.97	5301.552	Al	0.5	6.5	Si	0.75	1.125
Total	100	8160	Co	1	13	N	0.1	0.15
			Mn	0.35	4.55	Fe	68.495	102.7425
			Si	0.35	4.55	Total	100	150
			Cu	0.3	3.9			
			C	0.08	1.04			
			S	0.015	0.195			
			P	0.015	0.195			
			B	0.006	0.078			
			Total	100	1300			

Table I-3. Atomic Density by Element in the Bottom End-Fitting Region

Element/Isotope	Mass (g)	Nuclide ID[a]	Atomic Mass[b] (g)	Atomic Density (atoms/b•cm)
C	3.608	6000.50c	12.0107	3.7877E-05
Mn	129.95	25055.50c	54.93805	2.9825E-04
P	0.2625	15031.50c	30.97376	1.0686E-06
S	0.24	16000.60c	32.066	9.4373E-07
Si	168.875	14000.50c	28.0855	7.5817E-04
Cr	1825.9	24000.50c	51.9961	4.4278E-03
Ni	1499.375	28000.50c	58.6934	3.2211E-03
N[d]	0.15	7014.50c	14.003074	1.3507E-06
Fe	5636.1865	26000.55c	55.845	1.2726E-02
Mo	243.65	42000.50c	95.94	3.2022E-04
Nb	66.625	41093.50c	92.90638	9.0422E-05
Ti	11.7	22000.50c	47.867	3.0820E-05
Al	6.5	13027.50c	26.98154	3.0376E-05
Co	13	27059.50c	58.9332	2.7814E-05
Cu	3.9	29000.50c	63.546	7.7385E-06
B	0.078		10.811	9.0972E-07
^{10}B (19.9 at%)[c]		5010.50c		1.8103E-07
^{11}B (80.1 at%)[c]		5011.50c		7.2869E-07
Total	9610			2.1981E-02

SOURCE: [a] Briesmeister 1997, Appendix G.
[b] Parrington et al. 1996.
[c] Parrington et al. 1996, page 18.
[d] Neutron cross-section tables for ^{14}N are used in this calculation.

NOTES: [a] Nuclide identifier in the MCNP neutron data tables. The identifier for each element in the MCNP photon data tables is ZZZ000.01p, where ZZZ is the atomic number (Briesmeister 1997, pages 2-16 through 2-22).
[b] Region volume used for material homogenization (cm^3): region height * assembly transverse^2 = 10.16 * 21.68144^2 =4776.062.

2. Active Fuel Region

Table I-4. Total Mass by Material in the Active Fuel Region

Component	Material	Mass (kg)
Fuel	U	463.63
	O	62.8284
Cladding	Zircaloy-4	Density*volume = 106.5079794
Guide tube	Zircaloy-4	Mass/assembly*fraction in active fuel region = 7.3815721
Instrument tube	Zircaloy-4	Mass/assembly*fraction in active fuel region = 0.5905258
Grid supports	Zircaloy-4	0.64
Total	Zircaloy-4	115.12008
Spacer-incore	Inconel-718	4.9
Total		646.47848

Table I-5. Uranium Isotope Composition (5.5- and 4.0-wt% ^{235}U)

Isotope	wt%	Mass (kg)	wt%	Mass (kg)
^{235}U	5.5	25.49965	4.0	18.5452
^{234}U	0.0490	0.2273727	0.0347	0.1610
^{236}U	0.0253	0.1172984	0.0184	0.0853
^{238}U	94.4257	437.78568	95.9469	444.8385
Total	100	463.63	100	463.63

NOTE: The isotopic composition for the enriched uranium is calculated according to the equations provided in Bowman et al. (1995) (see Section 5.2).

Table I-6. Element Mass by Material in the Active Fuel Region

Zircaloy-4			Inconel-718			Fuel		
Element	wt%	Mass (g)	Element	wt%	Mass (g)	Isotope	Mass (g)	
							5.5-wt% ^{235}U	4.0-wt% ^{235}U
Sn	1.45	1669.2411	Ni	51.5	2523.5	U235	25499.65	18545.2
Fe	0.21	241.75216	Cr	19	931	U234	227.37266	161.0125
Cr	0.115	132.3881	Fe	17.809	872.641	U236	117.29839	85.30792
O	0.125	143.9001	Nb	5.125	251.125	U238	437785.68	444838.5
Zr	98.1	112932.8	Mo	3.05	149.45	O	62828.4	62828.4
Total	100	115120.1	Ti	0.9	44.1	Total	526458.4	526458.4
			Al	0.5	24.5			
			Co	1	49			
			Mn	0.35	17.15			
			Si	0.35	17.15			
			Cu	0.3	14.7			
			C	0.08	3.92			
			S	0.015	0.735			
			P	0.015	0.735			
			B	0.006	0.294			
			Total	100	4900			

Table I-7. Atomic Density by Element in the Active Fuel Region

Element/ Isotope	Nuclide ID[a]	Atomic Mass[b] (g)	5.5-wt% ^{235}U		4.0-wt% ^{235}U	
			Mass (g)	Atomic Density (atoms/b•cm)	Mass (g)	Atomic Density (atoms/b•cm)
Ni	28000.50c	58.6934	2523.5	1.5292E-04	2523.5	1.5292E-04
Cr	24000.50c	51.9961	1063.388	7.2742E-05	1063.388	7.2742E-05
Fe	26000.55c	55.845	1114.3932	7.0977E-05	1114.3932	7.0977E-05
Nb	41093.50c	92.90638	251.125	9.6141E-06	251.125	9.6141E-06
Mo	42000.50c	95.94	149.45	5.5406E-06	149.45	5.5406E-06
Ti	22000.50c	47.867	44.1	3.2769E-06	44.1	3.2769E-06
Al	13027.50c	26.98154	24.5	3.2297E-06	24.5	3.2297E-06
Co	27059.50c	58.9332	49	2.9573E-06	49	2.9573E-06
Mn	25055.50c	54.93805	17.15	1.1103E-06	17.15	1.1103E-06
Si	14000.50c	28.0855	17.15	2.1719E-06	17.15	2.1719E-06
Cu	29000.50c	63.546	14.7	8.2280E-07	14.7	8.2280E-07
C	6000.50c	12.0107	3.92	1.1609E-06	3.92	1.1609E-06
S	16000.60c	32.066	0.735	8.1528E-08	0.735	8.1528E-08
P	15031.50c	30.97376	0.735	8.4403E-08	0.735	8.4403E-08
B		10.811	0.294	9.6727E-08	0.294	9.6727E-08
^{10}B (19.9 at%)[c]	5010.50c			1.9249E-08		1.9249E-08
^{11}B (80.1 at%)[c]	5011.55c			7.7478E-08		7.7478E-08
Sn	50000.35c	118.71	1669.2411	5.0015E-05	1669.2411	5.0015E-05
Zr	40000.50c	91.224	112932.8	4.4033E-03	112932.8	4.4033E-03
O	8016.50c	15.99491	62972.3	1.4003E-02	62972.3	1.4003E-02
^{235}U	92235.50c	235.04392	25499.65	3.8588E-04	18545.2	2.8064E-04
^{234}U	92234.50c	234.04095	227.37266	3.4555E-06	161.01251	2.4470E-06
^{236}U	92236.50c	236.04556	117.29839	1.7675E-06	85.30792	1.2855E-06
^{238}U	92238.50c	238.05079	437785.68	6.5412E-03	444838.48	6.6466E-03
Total			646478.5	2.5716E-02	646478.5	2.5714E-02

SOURCE: [a] Briesmeister 1997, Appendix G.
[b] Parrington et al. 1996.
[c] Parrington et al. 1996, page 18.

NOTES: [a] Nuclide identifier in the MCNP neutron data tables. The identifier for each element in the MCNP photon data tables is ZZZ000.01p, where ZZZ is the atomic number (Briesmeister 1997, pages 2-16 through 2-22).
[b] Region volume used for material homogenization (cm^3): region height * assembly transverse^2 = 360.172 * 21.68144^2 = 169311.4.

3. Plenum

Table I-8. Total Mass by Material in the Plenum Region

Component	Material	Mass (kg)
Cladding	Zircaloy-4	Density * volume = 8.923235512
Guide tube	Zircaloy-4	mass/assembly * fraction in plenum region = 0.6184279
Instrument tube	Zircaloy-4	mass/assembly * fraction in plenum region = 0.0494742
Total	Zircaloy-4	9.5911376
Plenum spring	SS 302	0.01905
Spacer-plenum	Inconel-718	1.04
Total		10.650188

Table I-9. Element Mass by Material in the Plenum Region

Zircaloy-4			SS 302			Inconel-718		
Element	wt%	Mass (g)	Element	wt%	Mass (g)	Element	wt%	Mass (g)
Sn	1.45	139.0715	C	0.15	0.028575	Ni	51.5	535.6
Fe	0.21	20.141389	Mn	2	0.381	Cr	19	197.6
Cr	0.115	11.029808	P	0.045	0.0085725	Fe	17.809	185.2136
O	0.125	11.988922	S	0.03	0.005715	Nb	5.125	53.3
Zr	98.1	9408.906	Si	0.75	0.142875	Mo	3.05	31.72
Total	100	9591.1376	Cr	18	3.429	Ti	0.9	9.36
			Ni	9	1.7145	Al	0.5	5.2
			N	0.1	0.01905	Co	1	10.4
			Fe	69.925	13.320713	Mn	0.35	3.64
			Total	100	19.05	Si	0.35	3.64
						Cu	0.3	3.12
						C	0.08	0.832
						S	0.015	0.156
						P	0.015	0.156
						B	0.006	0.0624
						Total	100	1040

Table I-10. Atomic Density by Element in the Plenum Region

Element/Isotope	Mass (g)	Nuclide ID[a]	Atomic Mass[b] (g)	Atomic Density (atoms/b•cm)
Ni	537.3145	28000.50c	58.6934	3.8865E-04
Cr	212.05881	24000.50c	51.9961	1.7314E-04
Fe	218.6757	26000.55c	55.845	1.6624E-04
Nb	53.3	41093.50c	92.90638	2.4356E-05
Mo	31.72	42000.50c	95.94	1.4036E-05
Ti	9.36	22000.50c	47.867	8.3016E-06
Al	5.2	13027.50c	26.981538	8.1820E-06
Co	10.4	27059.50c	58.9332	7.4920E-06
Mn	4.021	25055.50c	54.938049	3.1073E-06
Si	3.782875	14000.50c	28.0855	5.7183E-06
Cu	3.12	29000.50c	63.546	2.0844E-06
C	0.860575	6000.50c	12.0107	3.0419E-06
S	0.161715	16000.60c	32.066	2.1411E-07
P	0.1645725	15031.50c	30.973761	2.2557E-07
B	0.0624		10.811	2.4504E-07
^{10}B (19.9 at%)[c]		5010.50c		4.8764E-08
^{11}B (80.1 at%)[c]		5011.55c		3.9060E-08
Sn	139.0715	50000.35c	118.71	4.9736E-05
O	11.988922	8016.50c	15.994915	3.1822E-05
Zr	9408.906	40000.50c	91.224	4.3788E-03
N[d]	0.01905	7014.50c	14.003074	5.7741E-08
Total				5.2653E-03

SOURCE: [a] Briesmeister 1997, Appendix G.
[b] Parrington et al. 1996.
[c] Parrington et al. 1996, page 18.
[d] Neutron cross-section tables for ^{14}N are used in this calculation.

NOTES: [a] Nuclide identifier in the MCNP neutron data tables. The identifier for each element in the MCNP photon data tables is ZZZ000.01p, where ZZZ is the atomic number (Briesmeister 1997, pages 2-16 through 2-22).
[b] Region volume used for atomic densities calculation (cm^3): region length * assembly transverse^2 = 30.1752 * 21.68144^2=14184.904.

4. Top End-Fitting Region

Table I-11. Total Mass by Material in the Top End-Fitting Region

Component	Material	Mass (kg)
Top nozzle	SS CF3M	7.48
Spring retainer	SS CF3M	0.91
Total	SS CF3M	8.39
Holding spring	Inconel-718	1.8
Upper end plug	SS 304	0.06
Upper nut	SS 304L	0.51
Total		10.76

Table I-12. Element Mass by Material in the Top End-Fitting Region

SS CF3M			Inconel-718			SS 304			SS 304L		
Element	wt%	Mass (g)	Element	wt%	Mass (g)	Element	wt%	Mass (g)	Element	wt%	Mass (g)
C	0.03	2.517	Ni	51.5	927	C	0.08	0.048	C	0.03	0.153
Mn	1.5	125.85	Cr	19	342	Cr	19	11.4	Mn	2	10.2
Si	2	167.8	Fe	17.809	320.562	Ni	9.25	5.55	P	0.045	0.2295
Cr	19	1594.1	Nb	5.125	92.25	Mn	2	1.2	S	0.03	0.153
Ni	10	839	Mo	3.05	54.9	P	0.045	0.027	Si	0.75	3.825
Mo	2.5	209.75	Ti	0.9	16.2	S	0.03	0.018	Cr	19	96.9
Fe	64.97	5450.983	Al	0.5	9	Si	0.75	0.45	Ni	10	51
Total	100	8390	Co	1	18	N	0.1	0.06	N	0.1	0.51
			Mn	0.35	6.3	Fe	68.745	41.247	Fe	68.045	347.0295
			Si	0.35	6.3	Total	100	60	Total	100	510
			Cu	0.3	5.4						
			C	0.08	1.44						
			S	0.015	0.27						
			P	0.015	0.27						
			B	0.006	0.108						
			Total	100	1800						

Table I-13. Atomic Density by Element in the Top End-Fitting Region

Element/Isotope	Mass (g)	Nuclide ID[a]	Atomic Mass[b] (g)	Atomic Density (atoms/b•cm)
C	4.158	6000.50c	12.0107	2.1977E-05
Mn	143.55	25055.50c	54.93805	1.6587E-04
P	0.5265	15031.50c	30.97376	1.0791E-06
S	0.441	16000.60c	32.066	8.7305E-07
Si	178.375	14000.50c	28.0855	4.0318E-04
Cr	2044.4	24000.50c	51.9961	2.4960E-03
Ni	1822.55	28000 50c	58.6934	1.9712E-03
N[d]	0.57	7014.50c	14.003074	2.5840E-06
Fe	6159.8215	26000.55c	55.845	7.0021E-03
Mo	264.65	42000.50c	95.94	1.7511E-04
Nb	92.25	41093.50c	92.90638	6.3033E-05
Ti	16.2	22000.50c	47.867	2.1485E-05
Al	9	13027.50c	26.98154	2.1175E-05
Co	18	27059.50c	58.9332	1.9389E-05
Cu	5.4	29000.50c	63.546	5.3945E-06
B	0.108		10.811	6.3417E-07
^{10}B (19.9 at%)[c]		5010.50c		1.2620E-07
^{11}B (80.1 at%)[c]		5011.50c		5.0797E-07
Total	10760			1.2371E-02

SOURCE: [a] Briesmeister 1997, Appendix G.
[b] Parrington et al. 1996.
[c] Parrington et al. 1996, page 18.
[d] Neutron cross-section tables for ^{14}N are used in this calculation.

NOTES: [a] Nuclide identifier in the MCNP neutron data tables. The identifier for each element in the MCNP photon data tables is ZZZ000.01p, where ZZZ is the atomic number (Briesmeister 1997, pages 2-16 through 2-22).
[b] Region height (cm): assembly length - pin length - bottom end-fitting length = 420.6875-390.3472-10.16 = 20.1803. Region volume used for atomic densities calculation (cm^3): region length * assembly transverse^2 = 20.1803 * 21.68144^2 = 9486.4531.

This attachment presents the calculations of total neutron and gamma intensities and gamma source region fractions.

The peaking factor for the gamma and neutron sources in the active fuel region is 1.25 (Electric Power Research Institute 1998, p. 3-26).

1. Bounding PWR SNF: Gamma Source

Total intensity per assembly (photons/s) = Peaking factor * Gamma intensity in the fuel region (photons/s) + Gamma intensity in the bottom end-fitting region (photons/s) + Gamma intensity in the plenum region (photons/s) + Gamma intensity in the top end-fitting region (photons/s) = 1.25 * 1.0556E+16 + 3.9264E+13 + 2.0605E+13 + 2.5235E+13 = 1.3280E+16

Total intensity per WP (photons/s) = 21 * Total intensity per assembly (photons/s) = 21 * 1.3280E+16 = 2.7889E+17

Intensity fraction for each assembly region to be entered on the sp (source probability) card = Gamma source intensity for each assembly region in the WP (photons/s) / Total intensity per WP (photons/s).

Intensity fraction for the active fuel region = 21 * 1.25 *1.0556E+16 / 2.7889E+17 = 9.9359E-01
Intensity fraction for the bottom end-fitting region = 21 * 3.9264E+13 / 2.7889E+17 = 2.9565E-03
Intensity fraction for the plenum region = 21 * 2.0605E+13 / 2.7889E+17 = 1.5515E-03
Intensity fraction for the top end-fitting region = 21 * 2.5235E+13 / 2.7889E+17 = 1.9002E-03

2. Hypothetical PWR SNF: Hardware and Active Fuel Region Gamma Sources

Total intensity per assembly (photons/s) = Peaking factor * Gamma intensity in the fuel region (photons/s) + Gamma intensity in the bottom end-fitting region (photons/s) + Gamma intensity in the plenum region (photons/s) + Gamma intensity in the top end-fitting region (photons/s) = 1.25 * 1.0556E+16 + 6.6070E+13 + 3.4051E+13 + 4.2338E+13 = 1.3338E+16

Total intensity per WP (photons/s) = 21 * Total intensity per assembly (photons/s) = 21 * 1.3338E+16 = 2.8009E+17

Intensity fraction for each assembly region to be entered on the sp (source probability) card = Gamma source intensity for each assembly region in the WP (photons/s) / Total intensity per WP (photons/s).

Intensity fraction for the active fuel region = 21 * 1.25 *1.0556E+16 / 2.8009E+17 = 9.8932E-01
Intensity fraction for the bottom end-fitting region = 21 * 6.6070E+13 / 2.8009E+17 = 4.9536E-03
Intensity fraction for the plenum region = 21 * 3.4051E+13 / 2.8009E+17 = 2.5530E-03
Intensity fraction for the top end-fitting region = 21 * 4.2338E+13 / 2.8009E+17 = 3.1743E-03

3. Bounding PWR SNF: Neutron Source

Total intensity per WP (neutrons/s) = 21 * Peaking factor * Total intensity per active fuel region (neutrons/s) = 21 * 1.25 * 1.3844E+09 = 3.6341E+10

4. Average PWR SNF: Gamma Source

Total intensity per assembly (photons/s) = Peaking factor * Gamma intensity in the fuel region (photons/s) + Gamma intensity in the bottom end-fitting region (photons/s) + Gamma intensity in the plenum region (photons/s) + Gamma intensity in the top end-fitting region (photons/s) = 1.25 * 2.6256E+15 + 3.8681E+12 + 2.0177E+12 + 2.4845E+12 = 3.2904E+15

Total intensity per WP (photons/s) = 21 * Total intensity per assembly (photons/s) = 21 * 3.2904E+15 = 6.9098E+16

Intensity fraction for each assembly region to be entered on the sp (source probability) card = Gamma source intensity for each assembly region in the WP (photons/s) / Total intensity per WP (photons/s).

Intensity fraction for the active fuel region = 21 * 1.25 * 2.6256E+15 / 6.9098E+16 = 9.9746E-01
Intensity fraction for the bottom end-fitting region = 21 * 3.8681E+12 / 6.9098E+16 = 1.1756E-03
Intensity fraction for the plenum region = 21 * 2.0177E+12 / 6.9098E+16 = 6.1322E-04
Intensity fraction for the top end-fitting region = 21 * 2.4845E+12 / 6.9098E+16 = 7.5509E-04

5. Average PWR SNF: Neutron Source

Total intensity per WP (neutrons/s) = 21 * Peaking factor * Total intensity per active fuel region (neutrons/s) = 21 * 1.25 * 2.3062E+08 = 6.0538E+09

ALL SHEETS ARE THE SAME REVISION STATUS

REVISION HISTORY				
ZONE	REV	DESCRIPTION	DATE	APPROVED
-	01	5129 WAS 5080 IN ZONES B8-1 AND B8-3	02/22/01	SMB
C4-2	01	172 WASTE PACKAGE TOP END TO INNER SHELL TOP LID WAS 200	02/22/01	SMB
C4-2	01	38.08 EXTENDED LID TO CLOSURE LID GAP WAS 30	02/22/01	SMB
C4-2	01	7 CLOSURE LID TO INNER SHELL GAP WAS 35	02/22/01	SMB
B6-2	01	100 OUTER SHELL BOTTOM LID TO LOWER TRUNNION COLLAR SLEEVE WAS ADDED TO DETAIL B	02/22/01	SMB
D2-2	01	ADDED 4 GAP	02/22/01	SMB
A2-5	01	DETAIL BB WAS ADDED	02/22/01	SMB
-	01	ITEM 14 WAS ITEM 13 IN ZONES D3-8, C5-12, B8-13, C6-18, AND C8-24	02/22/01	SMB
A6-5	01	ADDED DETAIL BB CALLOUT	02/22/01	SMB
A2-6	01	DETAIL CC WAS ADDED	02/22/01	SMB
D3-24	-	CONTINUED ON SHEET 24	02/22/01	SMB

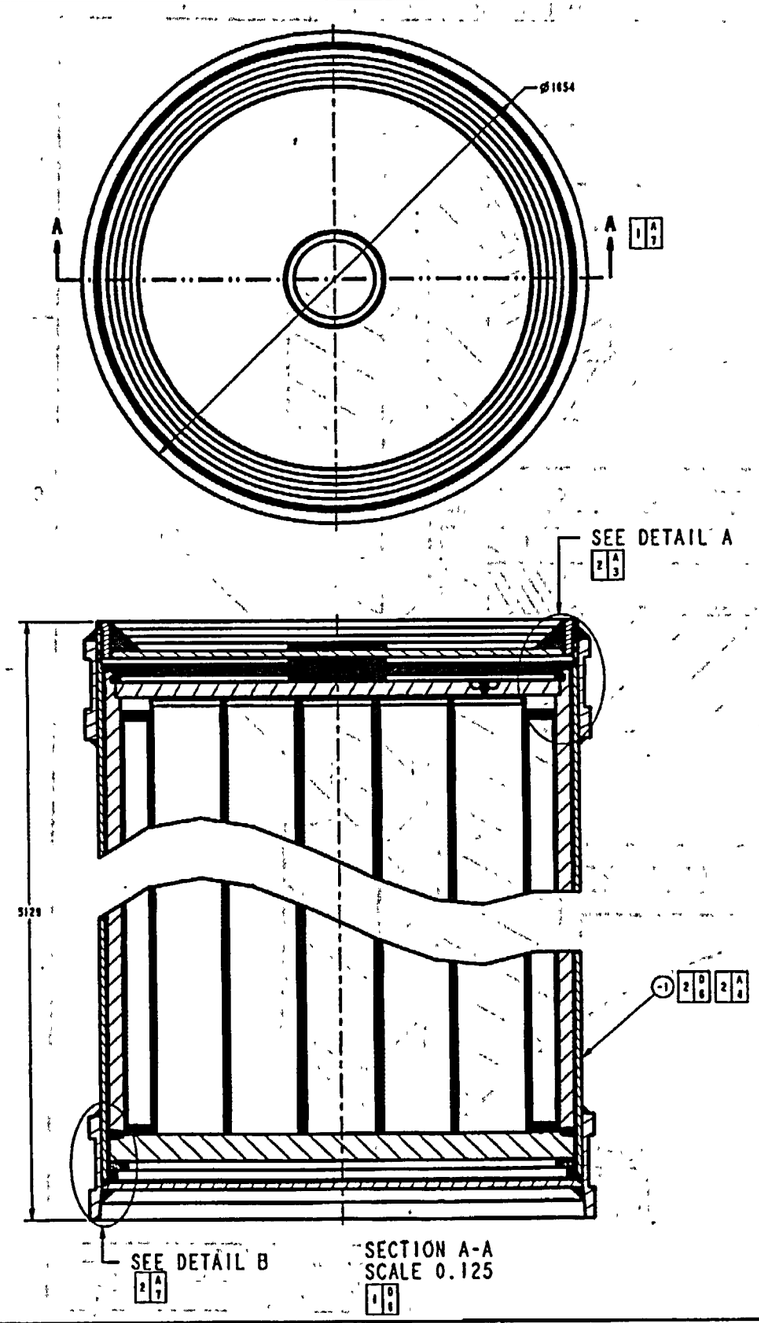

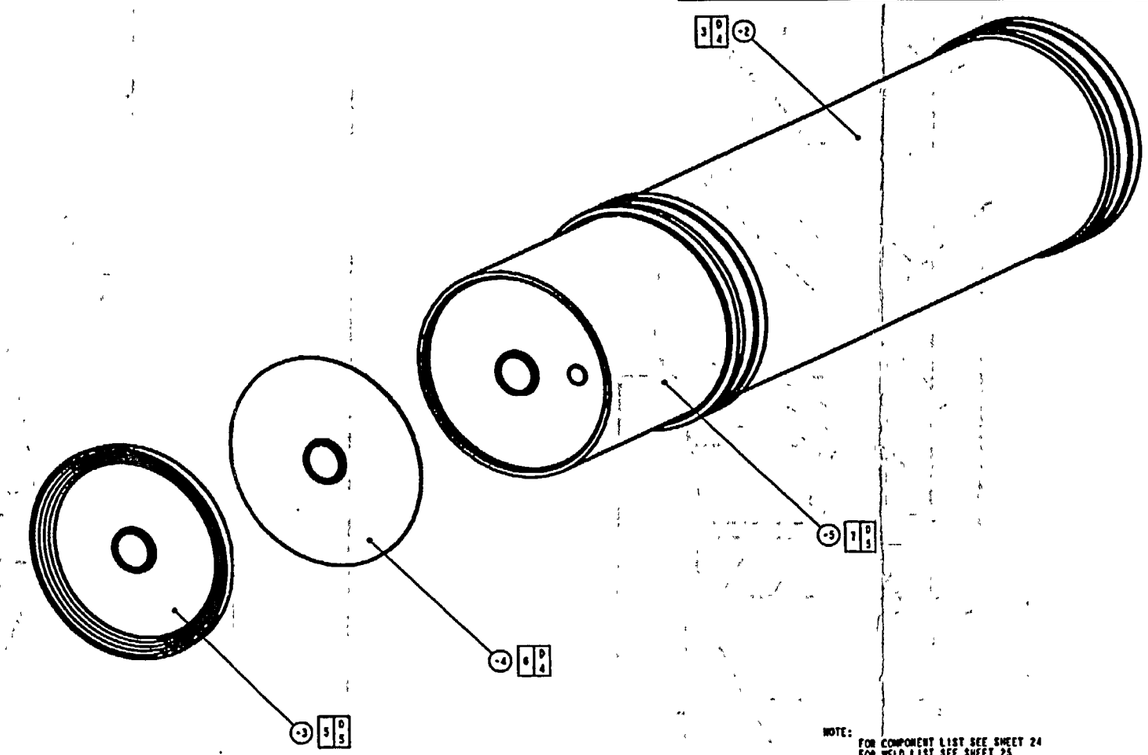

NOTE:
FOR COMPONENT LIST SEE SHEET 24
FOR WELD LIST SEE SHEET 25
FOR REFERENCE NOTE LIST SEE SHEET 25

"FOR INFORMATION ONLY"	APPROVALS	INITIAL/DATE	WASTE PACKAGE DEPARTMENT
THIRD ANGLE PROJECTION	SKETCHED BY BRYAN HARKINS	BH 02/22/01	M&O Civilian Radioactive Waste Management System MANAGEMENT & OPERATING CONTRACTOR
	STRUCTURAL LEAD SCOTT BENNETT	SMB 02/22/01	TITLE 21-PWR WASTE PACKAGE CONCEPT FOR LICENSE APPLICATION
	MANUFACTURING MGR JERRY COGAR	JDC 2/22/01	
DIMENSIONS ARE IN MILLIMETERS AND DEGREES UNLESS OTHERWISE NOTED	DESIGN GROUP MGR MICHAEL ANDERSON	2-22-01	SKETCH NUMBER SK-0219 / REVISION 01
DO NOT SCALE FROM SKETCH			SCALE 0.125 / SHEET 1 OF 25

ASSEMBLY -1
21-PWR WASTE PACKAGE ASSEMBLY
SCALE 1.000

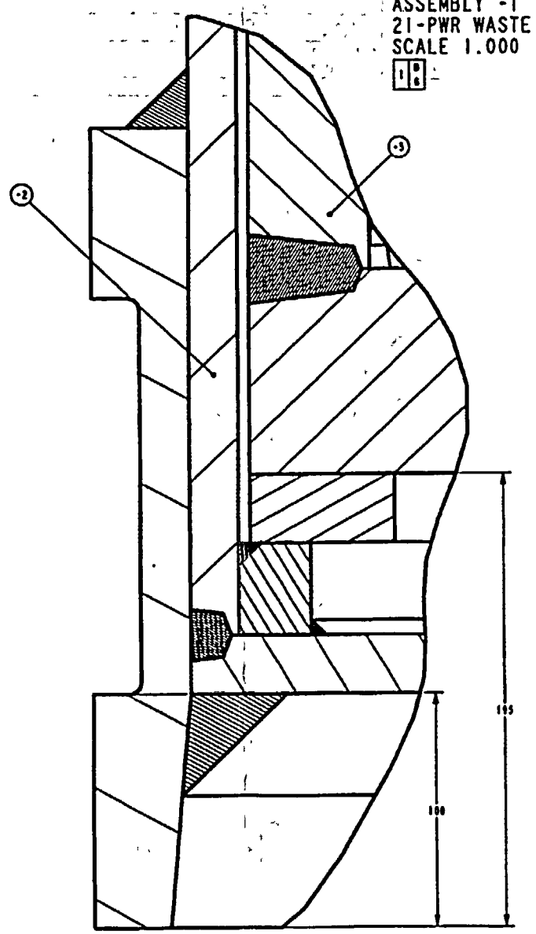

DETAIL B
SCALE 1.000

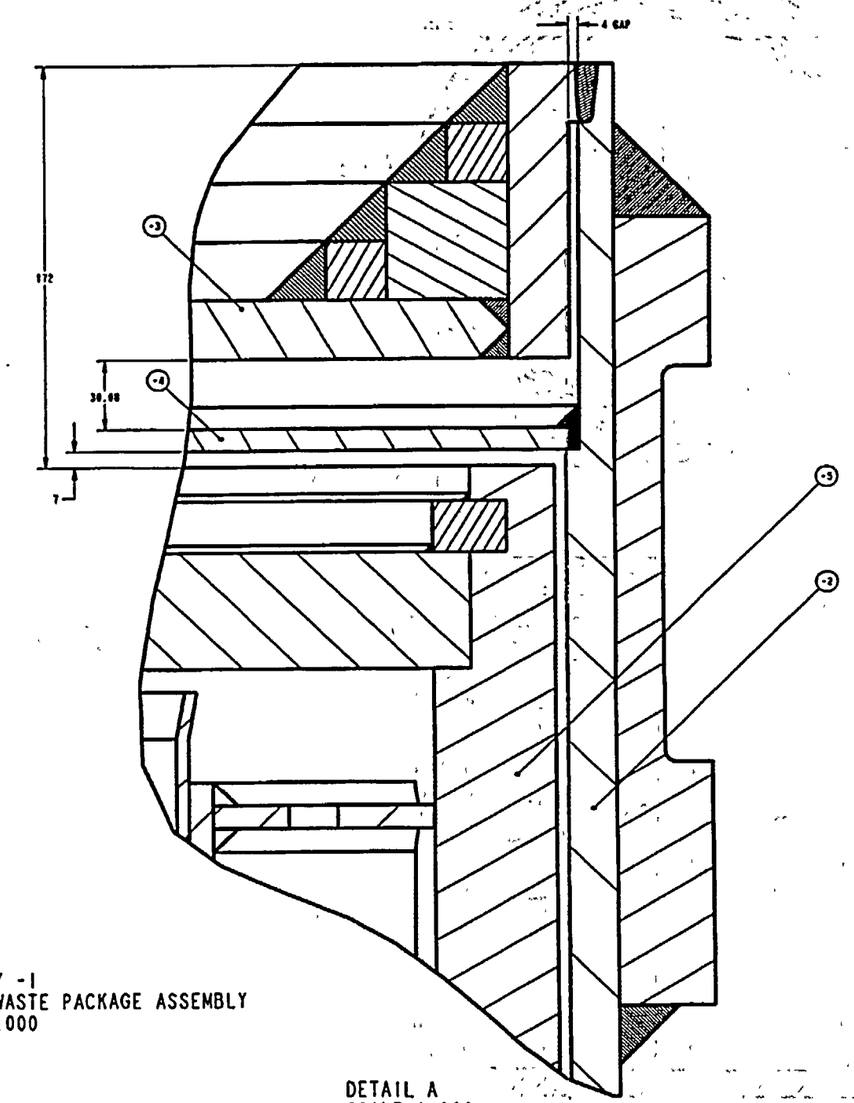

ASSEMBLY -1
21-PWR WASTE PACKAGE ASSEMBLY
SCALE 1.000

DETAIL A
SCALE 1.000

WASTE PACKAGE DEPARTMENT
MAC Civilian Radioactive Waste Management System
MANAGEMENT & OPERATING CONTRACTOR
SKETCH NUMBER SK-0219
REVISION 01
SCALE 0.125
SHEET 2 OF 25

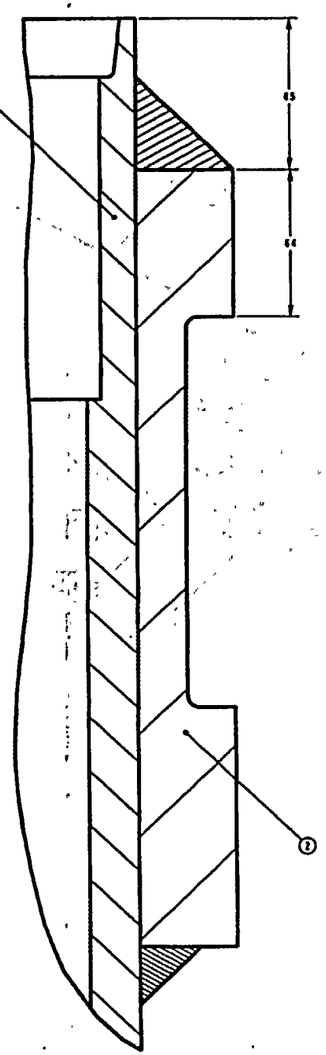

DETAIL C
SCALE 1.000
3 B 6

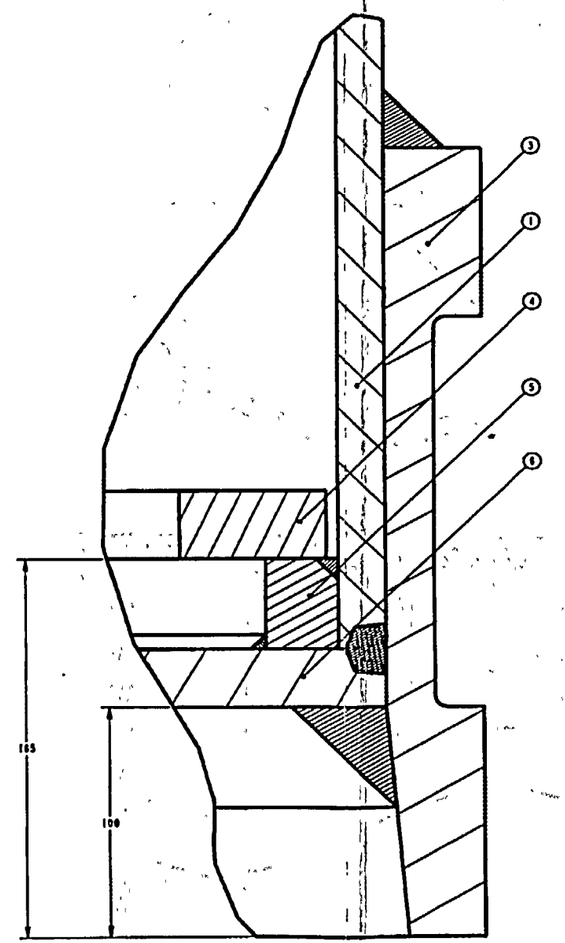

DETAIL D
SCALE 1.000
3 A 6

WASTE PACKAGE DEPARTMENT
MRC Civilian Radioactive Waste Management System
MANAGEMENT & OPERATING CONTRACTOR

SKETCH NUMBER	REVISION
SK-0219	01
SCALE 0.125	SHEET 4 OF 25

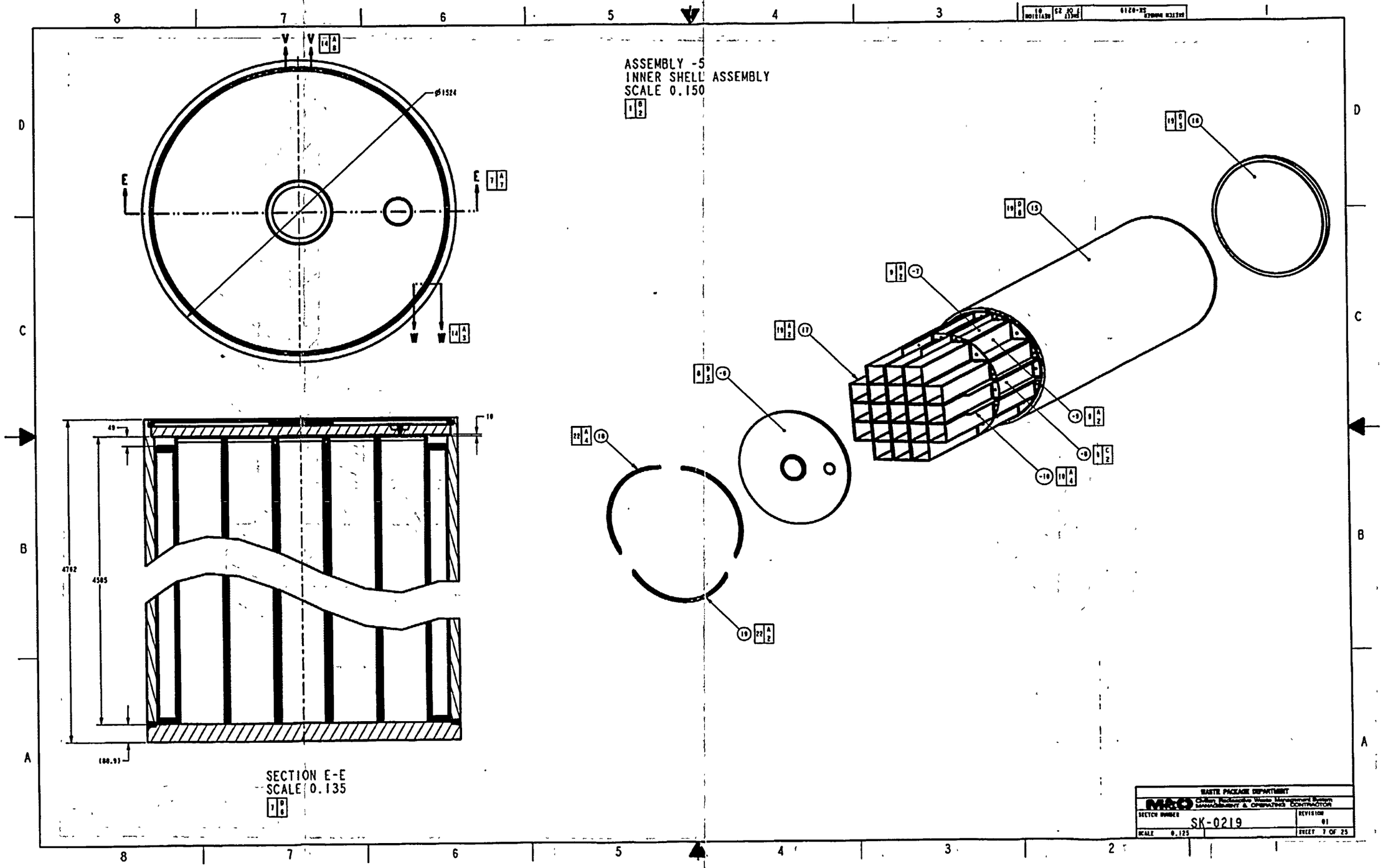
ASSEMBLY -5
INNER SHELL ASSEMBLY
SCALE 0.150
SECTION E-E
SCALE 0.135
WASTE PACKAGE DEPARTMENT
M&O
Civilian Radioactive Waste Management System
MANAGEMENT & OPERATING CONTRACTOR
SKETCH NUMBER
SK-0219
REVISION
01
SCALE 0.125
SHEET 7 OF 25

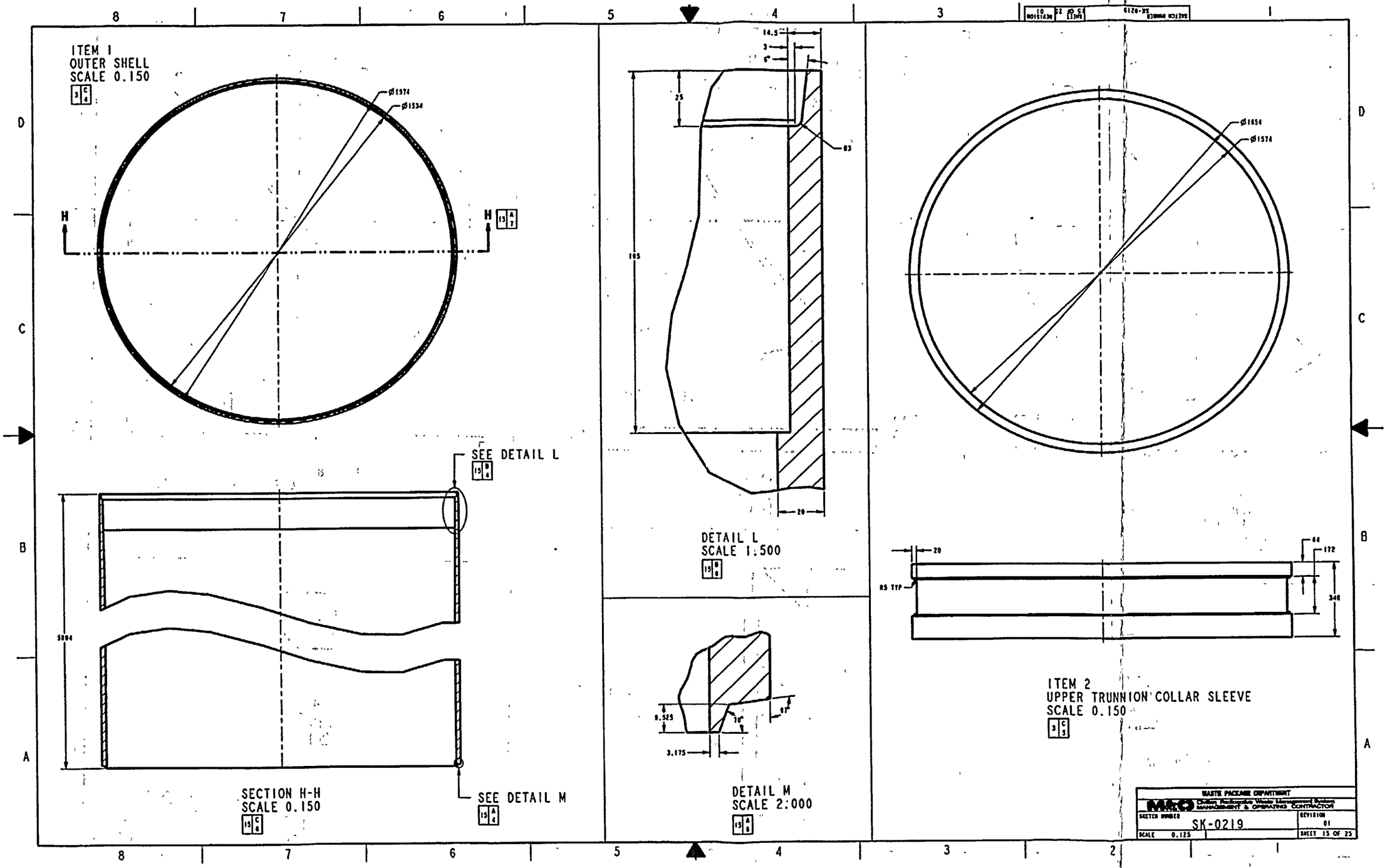
ITEM 1
OUTER SHELL
SCALE 0.150
Ø1574
Ø1534
H
H
SEE DETAIL L
SEE DETAIL M
5004
SECTION H-H
SCALE 0.150
14.5
3
6°
25
165
83
20
DETAIL L
SCALE 1:500
9.525
70°
67°
3.175
DETAIL M
SCALE 2:000
Ø1654
Ø1574
20
R5 TYP
64
172
340
ITEM 2
UPPER TRUNNION COLLAR SLEEVE
SCALE 0.150
WASTE PACKAGE DEPARTMENT
MAC
Civilian Radioactive Waste Management System
MANAGEMENT & OPERATING CONTRACTOR
SKETCH NUMBER
SK-0219
REVISION
01
SCALE 0.125
SHEET 15 OF 25

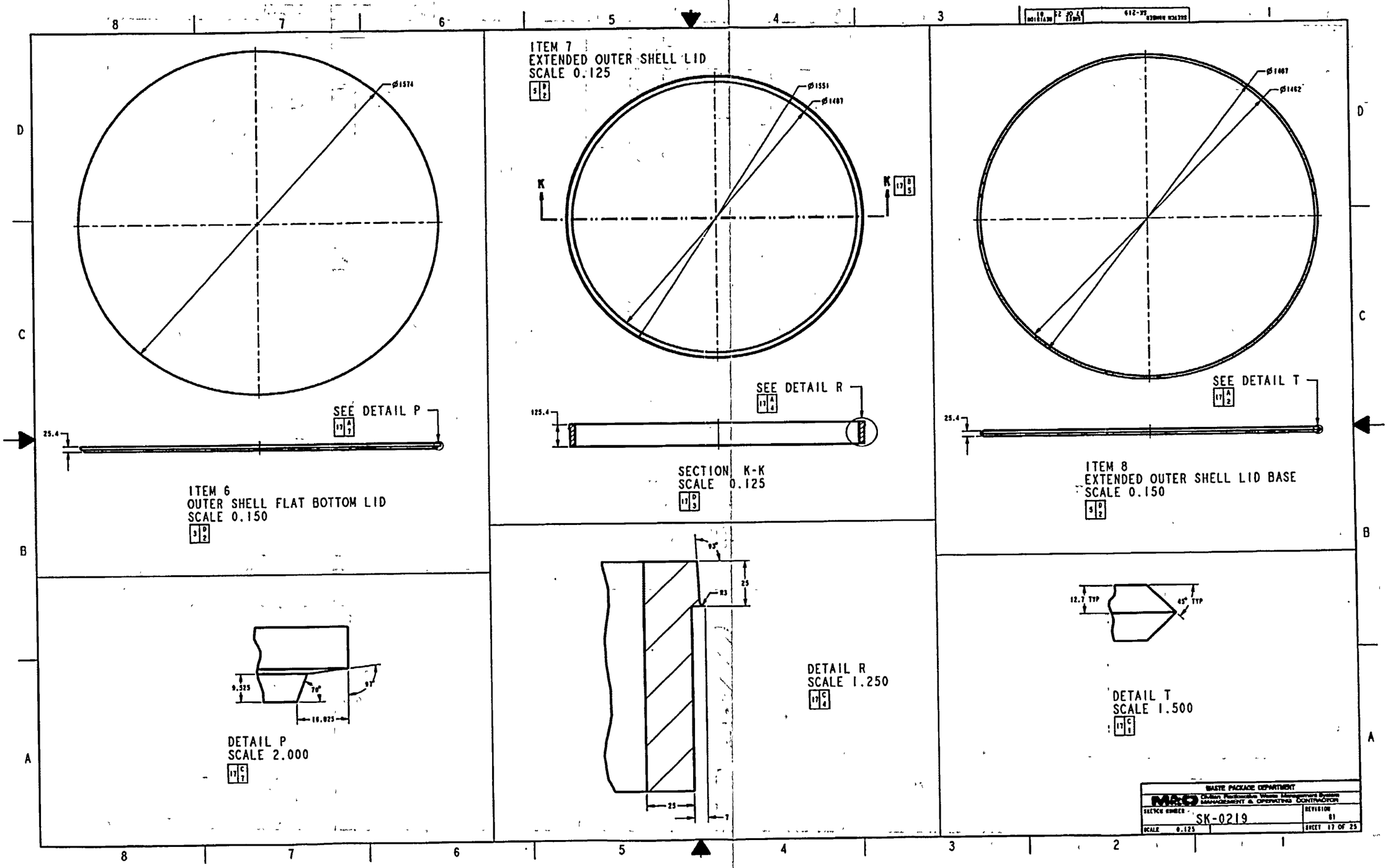
ITEM 7
EXTENDED OUTER SHELL LID
SCALE 0.125
Ø1574
Ø1551
Ø1487
Ø1467
Ø1462
K
K
SEE DETAIL P
SEE DETAIL R
SEE DETAIL T
25.4
125.4
25.4
ITEM 6
OUTER SHELL FLAT BOTTOM LID
SCALE 0.150
SECTION K-K
SCALE 0.125
ITEM 8
EXTENDED OUTER SHELL LID BASE
SCALE 0.150
9.525
70°
97°
10.825
DETAIL P
SCALE 2.000
93°
R3
25
25
7
DETAIL R
SCALE 1.250
12.7 TYP
45° TYP
DETAIL T
SCALE 1.500
WASTE PACKAGE DEPARTMENT
M&O Civilian Radioactive Waste Management System
MANAGEMENT & OPERATING CONTRACTOR
SKETCH NUMBER SK-0219
REVISION 01
SCALE 0.125
SHEET 17 OF 25

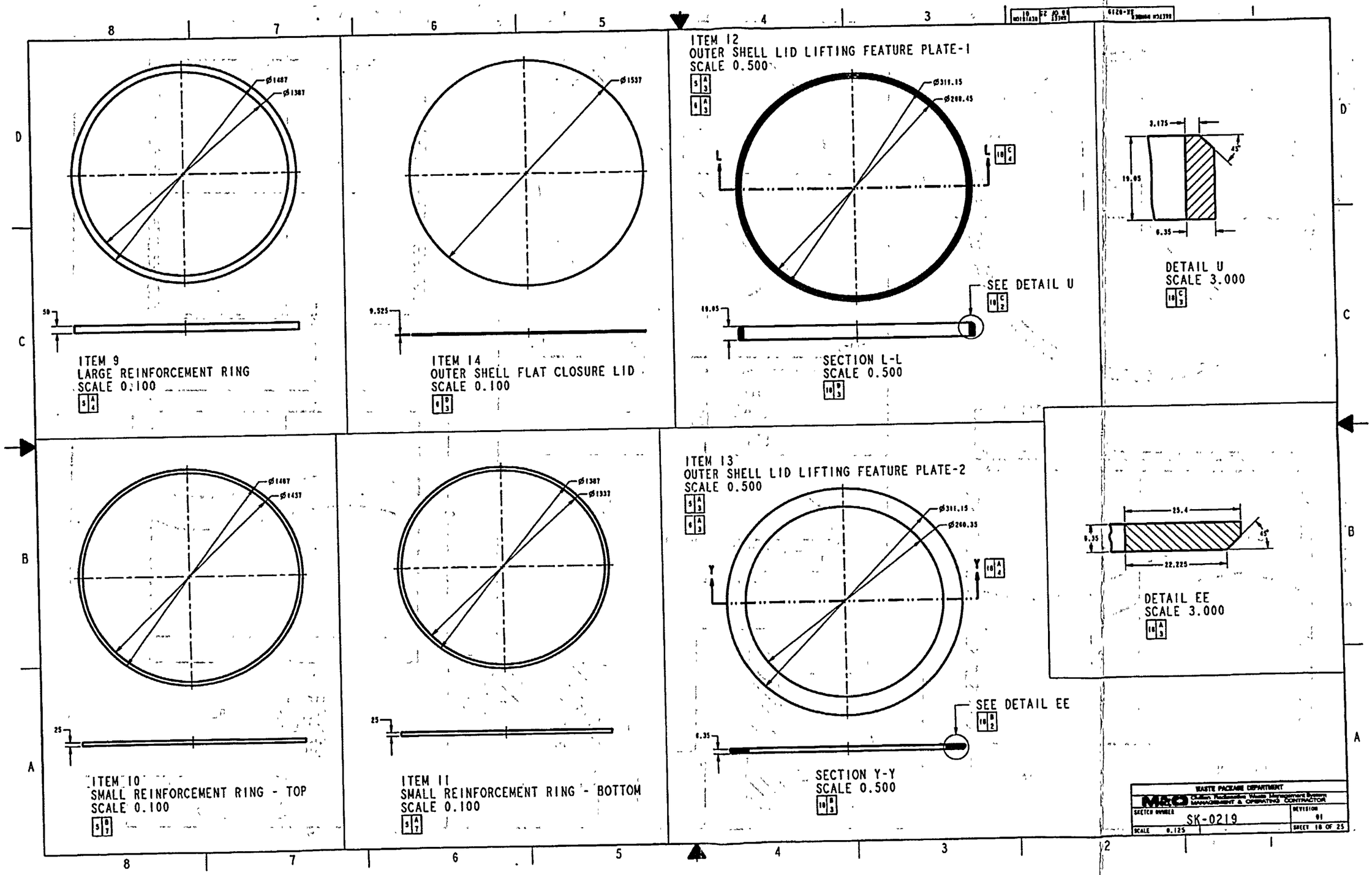
ITEM 9
LARGE REINFORCEMENT RING
SCALE 0.100
ITEM 14
OUTER SHELL FLAT CLOSURE LID
SCALE 0.100
ITEM 12
OUTER SHELL LID LIFTING FEATURE PLATE-1
SCALE 0.500
SEE DETAIL U
SECTION L-L
SCALE 0.500
DETAIL U
SCALE 3.000
ITEM 10
SMALL REINFORCEMENT RING - TOP
SCALE 0.100
ITEM 11
SMALL REINFORCEMENT RING - BOTTOM
SCALE 0.100
ITEM 13
OUTER SHELL LID LIFTING FEATURE PLATE-2
SCALE 0.500
SEE DETAIL EE
SECTION Y-Y
SCALE 0.500
DETAIL EE
SCALE 3.000
WASTE PACKAGE DEPARTMENT
M&O
Yucca Mountain Waste Management System
MANAGEMENT & OPERATING CONTRACTOR
SKETCH NUMBER
SK-0219
REVISION
01
SCALE 0.125
SHEET 10 OF 25

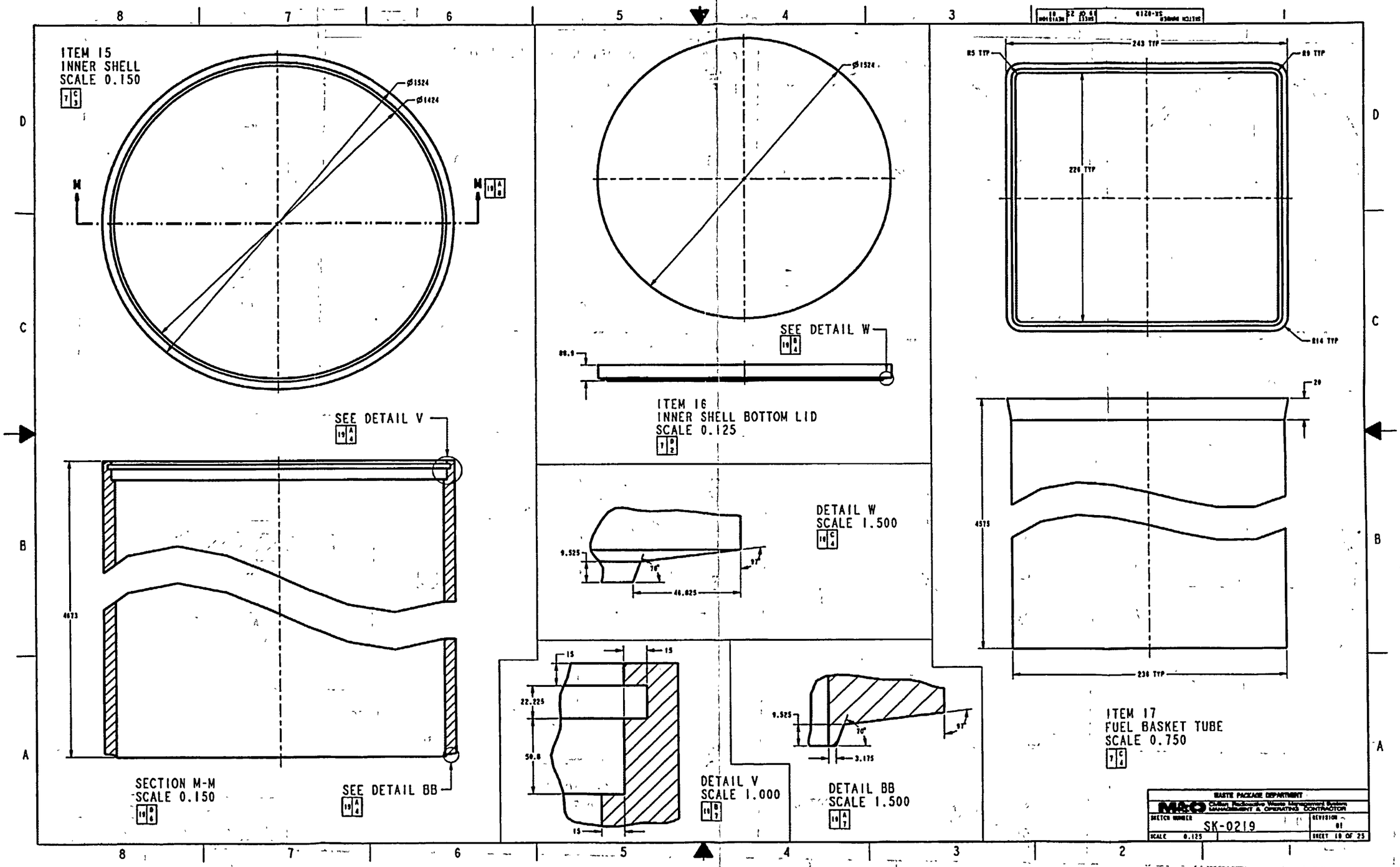
ITEM 15
INNER SHELL
SCALE 0.150
Ø1524
Ø1424
SEE DETAIL V
SECTION M-M
SCALE 0.150
SEE DETAIL BB
ITEM 16
INNER SHELL BOTTOM LID
SCALE 0.125
SEE DETAIL W
DETAIL W
SCALE 1.500
DETAIL V
SCALE 1.000
DETAIL BB
SCALE 1.500
ITEM 17
FUEL BASKET TUBE
SCALE 0.750
243 TYP
226 TYP
R5 TYP
R9 TYP
R14 TYP
236 TYP
WASTE PACKAGE DEPARTMENT
M&O
SKETCH NUMBER
SK-0219
REVISION
01
SCALE 0.125
SHEET 10 OF 25

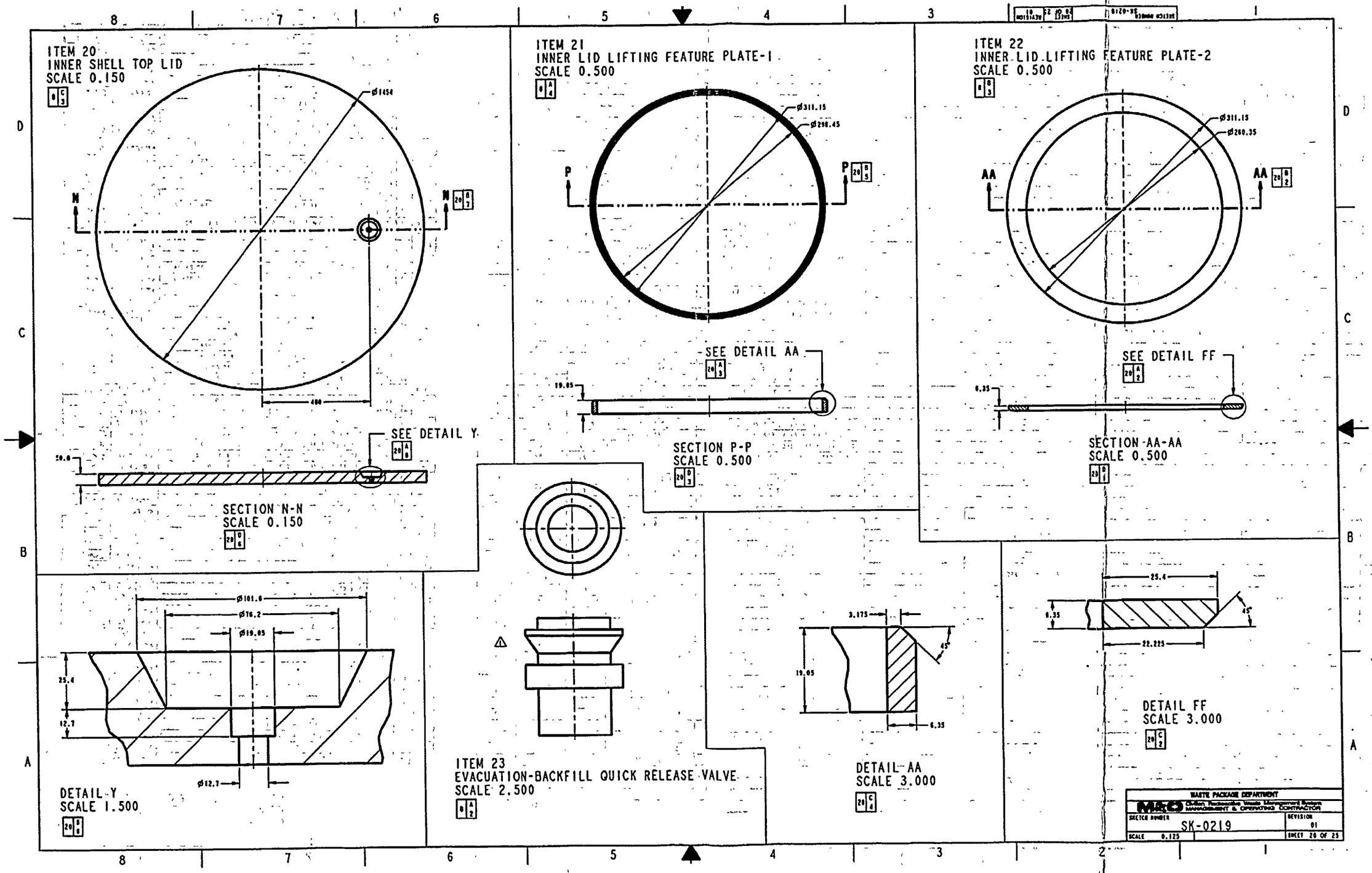
ITEM 20
INNER SHELL TOP LID
SCALE 0.150
Ø1454
N
N
400
SEE DETAIL Y
20.0
SECTION N-N
SCALE 0.150
ITEM 21
INNER LID LIFTING FEATURE PLATE-1
SCALE 0.500
Ø311.15
Ø298.45
P
P
SEE DETAIL AA
19.05
SECTION P-P
SCALE 0.500
ITEM 22
INNER LID LIFTING FEATURE PLATE-2
SCALE 0.500
Ø311.15
Ø260.35
AA
AA
SEE DETAIL FF
6.35
SECTION AA-AA
SCALE 0.500
Ø101.6
Ø76.2
Ø19.05
25.4
12.7
Ø12.7
DETAIL Y
SCALE 1.500
ITEM 23
EVACUATION-BACKFILL QUICK RELEASE VALVE
SCALE 2.500
3.175
45°
19.05
6.35
DETAIL AA
SCALE 3.000
25.4
6.35
45°
22.225
DETAIL FF
SCALE 3.000
WASTE PACKAGE DEPARTMENT
M&O Civilian Radioactive Waste Management System
MANAGEMENT & OPERATING CONTRACTOR
SKETCH NUMBER
SK-0219
REVISION
01
SCALE 0.125
SHEET 20 OF 23

GR 05/30/01

COMPONENT LIST

ITEM NUMBER	ASSEMBLY	SUBASSEMBLY	SUBASSEMBLY	SUBASSEMBLY	COMPONENT NAME	MATERIAL	THICKNESS	GRAMS (MM)	QTY REQD
-1	21-PWR WASTE PACKAGE ASSEMBLY	-	-	-	-	-	-	25333	1
		-	-	-	-	-	-	△1 25337	△1 1
-2	-	OUTER SHELL ASSEMBLY	-	-	-	-	-	5728	1
1	-	-	-	-	OUTER SHELL	SB-575 N06022	20	4194	1
2	-	-	-	-	UPPER TRUNNION COLLAR SLEEVE	SB-575 N06022	40	446	1
3	-	-	-	-	LOWER TRUNNION COLLAR SLEEVE	SB-575 N06022	40	436	1
4	-	-	-	-	SHELL INTERFACE RING	SA-240 S31600	30	60	1
5	-	-	-	-	INNER SHELL SUPPORT RING	SB-575 N06022	40	67	1
6	-	-	-	-	OUTER SHELL FLAT BOTTOM LID	SB-575 N06022	25.4	423	1
-3	-	EXTENDED OUTER SHELL LID ASSEMBLY	-	-	-	-	-	713	1
7	-	-	-	-	EXTENDED OUTER SHELL LID	SB-575 N06022	25	133	1
8	-	-	-	-	EXTENDED OUTER SHELL LID BASE	SB-575 N06022	25.4	377	1
9	-	-	-	-	LARGE REINFORCEMENT RING	SB-575 N06022	50	98	1
10	-	-	-	-	SMALL REINFORCEMENT RING - TOP	SB-575 N06022	25	25	1
11	-	-	-	-	SMALL REINFORCEMENT RING - BOTTOM	SB-575 N06022	25	23	1
12	-	-	-	-	OUTER SHELL LID LIFTING FEATURE PLATE-1	SB-575 N06022	6.35	0.96	1
13	-	-	-	-	OUTER SHELL LID LIFTING FEATURE PLATE-2	SB-575 N06022	6.35	1.2	1
-4	-	OUTER SHELL FLAT CLOSURE LID ASSEMBLY	-	-	-	-	-	156	1
14	-	-	-	-	OUTER SHELL FLAT CLOSURE LID	SB-575 N06022	9.525	154	1
12	-	-	-	-	OUTER SHELL LID LIFTING FEATURE PLATE-1	SB-575 N06022	6.35	0.96	1
13	-	-	-	-	OUTER SHELL LID LIFTING FEATURE PLATE-2	SB-575 N06022	6.35	1.2	1
-5	-	INNER SHELL ASSEMBLY	-	-	-	-	-	10725	1
	-		-	-	-	-	-	△1 10740	△1 1
15	-	-	-	-	INNER SHELL	SA-240 S31600	50	8554	1
16	-	-	-	-	INNER SHELL BOTTOM LID	SA-240 S31600	88.9	1274	1
17	-	-	-	-	FUEL BASKET TUBE	SA-516 K02700	5	164	21
18	-	-	-	-	SHEAR RING SECTION-1	SA-240 S31600	22.225	0.2	2
19	-	-	-	-	SHEAR RING SECTION-2	SA-240 S31600	22.225	7.8	1
-6	-	-	INNER SHELL TOP LID ASSEMBLY	-	-	-	-	675	1
20	-	-	-	-	INNER SHELL TOP LID	SA-240 S31600	50.8	672	1
21	-	-	-	-	INNER LID LIFTING FEATURE PLATE-1	SA-240 S31600	6.35	0.89	1
22	-	-	-	-	INNER LID LIFTING FEATURE PLATE-2	SA-240 S31600	6.35	1.1	1
23	-	-	-	-	EVACUATION-BACKFILL QUICK RELEASE VALVE	SA-240 S31600	12.7	0.06	1
24	-	-	-	-	EVACUATION-BACKFILL PORT COVER PLATE	SA-240 S31600	6.35	0.02	1
-7	-	-	END SIDEGUIDE ASSEMBLY	-	-	-	-	29	32
25	-	-	-	-	BASKET A-SIDEGUIDE	SA-516 K02700	10	27	32
26	-	-	-	-	BASKET A-STIFFENER	SA-516 K02700	10	0.72	64
-8	-	-	SIDEGUIDE ASSEMBLY	-	-	-	-	39	16
27	-	-	-	-	BASKET B-SIDEGUIDE	SA-516 K02700	10	36	16
28	-	-	-	-	BASKET B-STIFFENER	SA-516 K02700	10	1.5	32
-9	-	-	CORNERGUIDE ASSEMBLY	-	-	-	-	47	16
29	-	-	-	-	BASKET C-STIFFENER	SA-516 K02700	10	2.3	32
30	-	-	-	-	BASKET CORNERGUIDE	SA-516 K02700	10	42	16
-10	-	-	FUEL PLATE ASSEMBLY	-	-	-	-	599	4
	-	-		-	-	-	-	△1 805	△1 4
31	-	-	-	-	FUEL BASKET C-PLATE	NEUTRONIT A 978	7	64	16
	-	-	-	-		△1 SA-516 K02700	△1 7	△1 45	△1 16
-11	-	-	-	FUEL PLATE A-D ASSEMBLY	-	-	-	106	8
	-	-	-		-	-	-	△1 107	△1 8
32	-	-	-	-	FUEL BASKET A-PLATE	NEUTRONIT A 978	7	85	8
	-	-	-	-		△1 SA-516 K02700	△1 7	△1 86	△1 8
33	-	-	-	-	FUEL BASKET D-PLATE	SB-209 A96061 T4	5	21	8
-12	-	-	-	FUEL PLATE B-E ASSEMBLY	-	-	-	106	8
	-	-	-		-	-	-	△1 107	△1 8
34	-	-	-	-	FUEL BASKET B-PLATE	NEUTRONIT A 978	7	85	8
	-	-	-	-		△1 SA-516 K02700	△1 7	△1 86	△1 8
35	-	-	-	-	FUEL BASKET E-PLATE	SB-209 A96061 T4	5	21	8
-	-	-	-	-	-	-	-	-	-
-	-	-	-	-	TOTAL CARBON STEEL WELDS	SFA-5.18 K10726	-	34	-
-	-	-	-	-	TOTAL ALLOY 22 WELDS	SFA-5.14 N06022	-	182	-
-	-	-	-	-	TOTAL 316 WELDS	SFA-5.9 S31600	-	41	-
-	-	-	-	-	-	-	-	-	-
-	-	-	PWR FUEL ASSEMBLY	-	-	-	-	△1 773.4	21
-	21-PWR WP ASSEMBLY WITH SNF	-	-	-	-	-	-	41574	1
		-	-	-	-	-	-	△1 41598	△1 1

REVISION HISTORY

ZONE	REV	DESCRIPTION	DATE	APPROVED
D3-1	-	CONTINUED FROM SHEET 1	02/22/01	SMB
A4-6	01	34.9 WAS 37	02/22/01	SMB
A6-8	01	ADDED DETAIL CC CALLOUT	02/22/01	SMB
C6-7	01	ADDED SECTION W	02/22/01	SMB
D7-7	01	ADDED SECTION V	02/22/01	SMB
-	01	ADDED ITEM 18 IN ZONES C5-7, B7-13, C8-24, AND A4-22	02/22/01	SMB
-	01	ADDED ITEM 19 IN ZONES B4-7, C8-24, AND A2-22	02/22/01	SMB
C3-7	01	INNER SHELL ASSEMBLY PERSPECTIVE VIEW MODIFIED TO SHOW EXPLODED FUEL BASKET TUBES AND PLATE ASSEMBLY	02/22/01	SMB
-	01	ITEM 15 WAS ITEM 14 IN ZONES C2-7, C5-13, D3-13, D8-19, AND C8-24	02/22/01	SMB
-	01	ITEM 16 WAS ITEM 15 IN ZONES D1-7, C3-13, C5-19, AND C8-24	02/22/01	SMB
-	01	ITEM 17 WAS ITEM 16 IN ZONES C4-7, A2-18, AND C8-24	02/22/01	SMB
B8-7	01	4702 WAS 4712	02/22/01	SMB
-	01	88.9 WAS 50 IN ZONES A8-7, C5-19, AND C4-24	02/22/01	SMB
-	01	ITEM 20 WAS ITEM 17 IN ZONES C3-8, C1-12, B8-13, A4-12, D8-20, AND C8-24	02/22/01	SMB
A4-8	01	ADDED DETAIL DD TO SHOW CALLOUTS OF ITEM 21 AND ITEM 22	02/22/01	SMB
B7-8	01	ADDED DETAIL DD CALLOUT	02/22/01	SMB
A3-8	01	ADDED ITEM 20 CALLOUT	02/22/01	SMB
C2-12	01	ADDED ITEM 22	02/22/01	SMB
-	01	ITEM 23 WAS ITEM 19 IN ZONES A2-8, A4-12, A6-20, AND B8-24	02/22/01	SMB
-	01	ITEM 24 WAS ITEM 20 IN ZONES B2-8, B5-12, B2-21, AND B8-24	02/22/01	SMB
A8-8	01	76.2 WAS 77	02/22/01	SMB
D5-8	01	1454 WAS 1430	02/22/01	SMB
D8-9	01	ADDED SECTION R	02/22/01	SMB
-	01	DELETED 18 TYP IN ZONES B5-9, C5-9, AND D5-9	02/22/01	SMB
-	01	ADDED 20 TYP IN ZONES B5-9, C5-9, AND D5-9	02/22/01	SMB
-	01	ITEM 20 WAS ITEM 22 IN ZONES D7-9, A7-21, AND B8-24	02/22/01	SMB
-	01	ITEM 25 WAS ITEM 21 IN ZONES D6-9, C7-21, AND B8-24	02/22/01	SMB
-	01	ITEM 26 WAS ITEM 24 IN ZONES C7-9, B1-21, AND B8-24	02/22/01	SMB
-	01	ITEM 27 WAS ITEM 23 IN ZONES B7-21, C6-8, AND B8-24	02/22/01	SMB
C8-9	01	ADDED SECTION T	02/22/01	SMB
-	01	ITEM 30 WAS ITEM 26 IN ZONES B8-9, D3-22, AND B8-24	02/22/01	SMB
-	01	ITEM 29 WAS ITEM 25 IN ZONES B6-22, B7-9, AND B8-24	02/22/01	SMB
B8-9	01	ADDED SECTION U	02/22/01	SMB
-	01	ITEM 31 WAS ITEM 27 IN ZONES C4-10, A8-22, AND B8-24	02/22/01	SMB
-	01	ITEM 33 WAS ITEM 28 IN ZONES C4-11, C2-23, AND B8-24	02/22/01	SMB
-	01	ITEM 32 WAS ITEM 28 IN ZONES B2-11, C8-23, AND B8-24	02/22/01	SMB
-	01	ITEM 35 WAS ITEM 31 IN ZONES B4-11, B1-23, AND A8-24	02/22/01	SMB
-	01	ITEM 34 WAS ITEM 30 IN ZONES B2-11, A6-23, AND A8-24	02/22/01	SMB
-	01	6.35 WAS 12.7 IN ZONES D4-12 AND D2-12	02/22/01	SMB
D3-12	01	ADDED W9 IN 2 PLACES	02/22/01	SMB
D8-25	01	ADDED WELD 6	02/22/01	SMB
D3-12	01	ADDED W7 IN 2 PLACES	02/22/01	SMB
B4-12	01	ADDED W19	02/22/01	SMB
-	01	ADDED ITEM 13 CALLOUT IN ZONES D2-12 AND B5-12	02/22/01	SMB
C2-12	01	ITEM 21 WAS ITEM 18	02/22/01	SMB
C8-25	01	ADDED WELD 19	02/22/01	SMB
C4-12	01	W18 WAS W14	02/22/01	SMB
C8-25	01	WELD 18 WAS WELD 14	02/22/01	SMB
C4-12	01	6.35 WAS 12.7	02/22/01	SMB
C3-12	01	W17 WAS W13	02/22/01	SMB
C8-25	01	WELD 17 WAS WELD 13	02/22/01	SMB
C4-12	01	ADDED W17	02/22/01	SMB
B1-12	01	W21 WAS W16	02/22/01	SMB
C8-25	01	WELD 21 WAS WELD 16	02/22/01	SMB
A2-12	01	W20 WAS W15	02/22/01	SMB
C8-25	01	WELD 20 WAS WELD 15	02/22/01	SMB
C8-13	01	W18 WAS W9	02/22/01	SMB
C8-25	01	WELD 18 WAS WELD 9	02/22/01	SMB
C8-13	01	12.7 WAS 12.5 IN 2 PLACES	02/22/01	SMB
-	01	TYP WAS REMOVED FROM DIMENSIONS IN ZONES A3-13 AND B4-13	02/22/01	SMB
-	01	REFERENCE NOTE 1 CALLOUT WAS REMOVED IN ZONES A3-13 AND B4-13	02/22/01	SMB
C8-25	01	ADDED WELD 13 AND WELD 14	02/22/01	SMB
D3-25	-	CONTINUED ON SHEET 25	02/22/01	SMB

WASTE PACKAGE DEPARTMENT
M&O Civilian Radioactive Waste Management System MANAGEMENT & OPERATING CONTRACTOR

SKETCH NUMBER	REVISION
SK-0219	01
SCALE 0.125	SHEET 24 OF 25

OFFICE OF CIVILIAN RADIOACTIVE WASTE MANAGEMENT
CALCULATION COVER SHEET

1. QA: QA
Page. 1 Of: 42

2. Calculation Title
Dose Rate Calculation for the 44-BWR UCF Waste Package

MOL.20010629.0077

3. Document Identifier (including Revision Number)
CAL-UDC-NU-000003 REV 01

4. Total Attachments	5. Attachment Numbers – Number of pages in each
5	I-1, II-1, III-3, IV-2, and V (compact disk)

	Print Name	Signature	Date
6. Originator	Georgeta Radulescu	Georgeta Radulescu	05/30/2001
7. Checker	Jabo S. Tang	Jabo S. Tang	05/30/2001
8. Lead	Michael J. Anderson	[illegible]	5/30/01

9. Remarks

Revision History

10. Revision No.	11. Description of Revision
00	Initial Issue
01	Sketches SK-0219 REV 01, page 24, and SK-0192 REV 00, page 1, (Attachments I and II) replaced Sketch SK-0135 REV 00. The surface dose rates were evaluated for the waste package design concept presented in Attachment I, and Tables 11 through 34 were updated. Changes to comply with current procedures were made as nedeed. References were added. Editorial changes were made to the document as needed.

OFFICE OF CIVILIAN RADIOACTIVE WASTE MANAGEMENT
CALCULATION COVER SHEET

1. QA: QA
Page: 1 Of. 42

2. Calculation Title
Dose Rate Calculation for the 44-BWR UCF Waste Package

MOL.20010629.0077

3. Document Identifier (including Revision Number)
CAL-UDC-NU-000003 REV 01

4. Total Attachments	5. Attachment Numbers – Number of pages in each
5	I-1, II-1, III-3, IV-2, and V (compact disk)

	Print Name	Signature	Date
6. Originator	Georgeta Radulescu	Georgeta Radulescu	05/30/2001
7. Checker	Jabo S. Tang	Jabo S. Tang	05/30/2001
8. Lead	Michael J. Anderson	[illegible]	5/30/01

9. Remarks

Revision History

10. Revision No.	11. Description of Revision
00	Initial Issue
01	Sketches SK-0219 REV 01, page 24, and SK-0192 REV 00, page 1, (Attachments I and II) replaced Sketch SK-0135 REV 00. The surface dose rates were evaluated for the waste package design concept presented in Attachment I, and Tables 11 through 34 were updated. Changes to comply with current procedures were made as nedeed. References were added. Editorial changes were made to the document as needed.

CONTENTS

Page

1. PURPOSE 5
2. METHOD 5
3. ASSUMPTIONS 6
4. USE OF COMPUTER SOFTWARE AND MODELS 7
   4.1 SOFTWARE 7
   4.2 MODELS 7
5. CALCULATION 7
   5.1 CALCULATION INPUTS 7
      5.1.1 Disposal Container 8
      5.1.2 BWR SNF Assemblies 11
   5.2 DESCRIPTION OF CALCULATIONS 16
      5.2.1 Selection of Source Terms 16
      5.2.2 Geometric Representation of the Source Regions 16
      5.2.3 Material Specification in the MCNP Input 16
      5.2.4 Calculation of the Total Dose Rate 17
      5.2.5 Segments Selected for Surface Dose Rate Calculations 18
6. RESULTS 24
   6.1 BOUNDING SOURCE FOR THE ACTIVE FUEL REGION 24
      6.1.1 Basket Assembly Inside the WP 24
      6.1.2 No Basket Assembly Inside the WP 28
   6.2 HYPOTHETICAL BOUNDING SOURCE 32
   6.3 AVERAGE SOURCE 36
7. REFERENCES 40
   7.1 DOCUMENTS CITED 40
   7.2 CODES, STANDARDS, REGULATIONS, AND PROCEDURES 41
8. ATTACHMENTS 42

FIGURES

Page

1. Source Region Representation in MCNP Calculations 19
2. Lateral View of WP with Basket Assembly for MCNP Calculations 20
3. Lateral View of WP Without Basket Assembly for MCNP Calculations 21
4. Surface Segments Used for Dose Rate Calculations 22
5. Segments of the Top Surface of the WP Cavity Used in Dose Rate Calculations 23
6. Segments of the Bottom Surface of the Top Outer Lid Used in Dose Rate Calculations 23

TABLES

Page

1. Geometry and Material Specifications for the Disposal Container 8
2. Chemical Composition of SA-516 K02700 9
3. Chemical Composition of SA-240 S31600 9
4. Chemical Composition of SB-575 N06022 10
5. Chemical Composition of Neutronit A976 10
6. Chemical Composition of SB-209 A96061 11
7. Light Element Mass and Dimensions by Fuel Region for a GE 2/3 8x8 BWR Assembly 12
8. Gamma and Neutron Sources per Assembly for the Bounding BWR SNF 13
9. Gamma and Neutron Sources per Assembly for the Hypothetical Bounding BWR SNF 14
10. Gamma and Neutron Sources per Assembly for the Average BWR SNF 15
11. Dose Rates on the Inner Surface of the Inner Shell: Bounding BWR SNF 24
12. Dose Rates on the Inner Surface of the Outer Shell: Bounding BWR SNF 25
13. Dose Rates on the WP Outer Radial Surface: Bounding BWR SNF 25
14. Dose Rates on a Radial Surface 1 m from the WP: Bounding BWR SNF 26
15. Dose Rates on a Radial Surface 2 m from the WP: Bounding BWR SNF 26
16. Dose Rates on the Axial Surfaces: Bounding BWR SNF 27
17. Dose Rates on the Inner Surface of the Inner Shell: Bounding BWR SNF, No Basket 28
18. Dose Rates on the Inner Surface of the Outer Shell: Bounding BWR SNF, No Basket 28
19. Dose Rates on the WP Outer Radial Surface: Bounding BWR SNF, No Basket 29
20. Dose Rates on a Radial Surface 1 m from the WP: Bounding BWR SNF, No Basket 29
21. Dose Rates on a Radial Surface 2 m from the WP: Bounding BWR SNF, No Basket 30
22. Dose Rates on the Axial Surfaces: Bounding BWR SNF, No Basket 31
23. Dose Rates on the Inner Surface of the Inner Shell: Hypothetical BWR SNF 32
24. Dose Rates on the Inner Surface of the Outer Shell: Hypothetical BWR SNF 32
25. Dose Rates on the WP Outer Radial Surface: Hypothetical BWR SNF 33
26. Dose Rates on a Radial Surface 1 m from the WP: Hypothetical BWR SNF 33
27. Dose Rates on a Radial Surface 2 m from the WP: Hypothetical BWR SNF 34
28. Dose Rates on the Axial Surfaces: Hypothetical BWR SNF 35
29. Dose Rates on the Inner Surface of the Inner Shell: Average BWR SNF 36
30. Dose Rates on the Inner Surface of the Outer Shell: Average BWR SNF 36
31. Dose Rates on the WP Outer Radial Surface: Average BWR SNF 37
32. Dose Rates on a Radial Surface 1 m from the WP: Average BWR SNF 37
33. Dose Rates on a Radial Surface 2 m from the WP: Average BWR SNF 38
34. Dose Rates on the Axial Surfaces: Average BWR SNF 39
35. List of Attachments 42
36. File Attributes for the Contents of Electronic Media 42

1. PURPOSE

The objective of this calculation is to evaluate the surface dose rates of a 44-BWR (boiling water reactor) uncanistered fuel (UCF) waste package (WP). The scope is limited to the 44-BWR waste package concept for License Application. Since a sketch for this waste package type is not available, sketch SK-0219 REV 01 for the 21-pressurized water reactor waste package concept for License Application provides the specifications for the waste package disposal container. The results of this calculation will be used to assess the shielding performance of the 44-BWR WP design concept for License Application.

The planning requirements that apply to the generation of this calculation have been identified in *Technical Work Plan for: Waste Package Design Description for SR* (CRWMS M&O [Civilian Radioactive Waste Management and Operator Contractor] 2000a, Waste Package Design Methodology). This calculation is performed and documented according to AP-3.12Q, *Calculations*

2. METHOD

The Monte Carlo radiation transport method, which is implemented in the MCNP computer code (Briesmeister 1997), is used to calculate surface dose rates of waste packages. MCNP uses the continuous-energy cross sections processed from the evaluated nuclear data files (Briesmeister 1997, Appendix G).

The radiation source terms for the BWR SNF were developed in CRWMS M&O (1999, pp. 10 and 45) for spent fuel with various combinations of burnup, enrichment, and cooling time. The initial uranium content considered in radiation source term generation is 200 kg, and the highest fuel burnup and enrichment considered are 75 GWd/MTU and 5.5 wt% ^{235}U, respectively. In this calculation, "bounding BWR SNF" is the spent fuel with a 75-GWd/MTU burnup, 5.5-wt% enrichment, 5-year cooling time, and an initial uranium content of 200 kg. These values bound the initial uranium content (190 kg), burnup (65.55 GWd/MTU), enrichment (4.28 wt% ^{235}U), and cooling time (5 year) of the BWR assemblies in the commercial waste stream that will arrive at the repository (CRWMS M&O 2000b, Attachment III, preblend files). The characteristics of an "average BWR SNF" are defined in Assumption 3.3. Dose rate calculations for a "hypothetical bounding BWR SNF" are also included to evaluate an upper limit for the dose rate at the WP external surfaces (See Section 5.2).

The control of the electronic management of data is accomplished in accordance with the process control evaluation for the technical work plan of this calculation (CRWMS M&O 2000a).

3. ASSUMPTIONS

The assumption is used throughout Section 5.

3.1 It is assumed that the disposal container has thicknesses and material specifications as presented in sketch SK-0219 REV 01, page 24, and accommodates 44 BWR assemblies as specified in sketch SK-0192 REV 00, page 1. The rationale for this assumption is that the design concept for License Application for the disposal container of a 21-pressurized water reactor WP, which is presented in sketch SK-0219 REV 01, is the design concept for disposal containers of all types of uncanistered commercial spent nuclear fuels.

3.2 The radiation source and contents of each assembly region are homogenized inside region volume. The rationale for this assumption is that the surface dose rates of a WP with this geometric representation for the fuel assemblies and of a WP with detailed geometric representation for the fuel assemblies are the same within statistical limits (CRWMS M&O 1998b, Section 6).

3.3 The BWR spent nuclear fuel (SNF) having 3.5-wt% initial ^{235}U, 40-GWd/MTU burnup, and 22-year decay time is assumed to be the SNF with average characteristics. The rationale for this assumption is that the source term for the SNF with these characteristics generates conservative (higher) dose rates for the average BWR SNF. The average BWR SNF is estimated in CRWMS M&O (1999, page 46).

3.4 A peaking factor of 1.4 bounds the axial gamma and neutron source distribution in the active fuel region (CRWMS M&O 1999, page 47). The rationale for this assumption is that this value for the axial peaking factor for a representative BWR SNF assembly at a lower burnup is conservative for dose rate evaluations.

3.5 The chemical composition of the SNF is assumed the same as that of the fresh fuel. The rationale for this assumption is that small weight variations of the elements do not affect the accuracy of dose results, as long as the total weight is maintained.

3.6 The chemical composition of Neutronit A976 is assumed for Neutronit A978, which is a molybdenum alloyed Bohler Neutronit (Kugler 1996). The rationale for this assumption is that by neglecting molybdenum in the Neutronit A976 chemical composition, the balance element iron is increased, which provides conservative (higher) dose rates at the external surfaces of the WP.

4. USE OF COMPUTER SOFTWARE AND MODELS

4.1 SOFTWARE

The MCNP 4B2LV computer code is used to calculate neutron and gamma fluxes on the WP surfaces for dose rate evaluations. This computer code is a baseline qualified software.

- Program name: MCNP.
- Version/Revision number: Version 4B2.
- Computer Software Configuration Item (CSCI) Number: 30033 V4B2LV (CRWMS M&O 1998a).
- Computer type: Hewlett Packard (HP) workstation "Bloom" (Tag: CRWMS-M&O 700887).
- Operating System: HP-UX (Hewlett Packard UNIX) 10.20.
- The MCNP 4B2LV computer code is an appropriate tool to determine the dose rates on the surface and near the surface of a WP containing 44-BWR SNF assemblies.
- This software has been validated over the range it was used.
- This software was previously obtained from the Software Configuration Management in accordance with appropriate procedures.

The input file for each computer calculation is echoed in the output file of the calculation. The output files are described in Section 8.

4.2 MODELS

None used.

5. CALCULATION

5.1 CALCULATION INPUTS

The following sections outline the information used in the calculation of dose rates on the WP surfaces. Each MCNP calculation requires specifications of the WP geometry, material, and source parameters. The WP consists of the disposal container and 44 BWR SNF assemblies. Sketch SK-0219 REV 01, page 24, which is shown in Attachment I, provides the thickness and material specifications for the components of the disposal container, and sketch SK-0192, page 1, which is

shown in Attachment II, provides the specifications for the cavity and basket assembly dimensions. The information provided by the sketches is that of the potential design of the type of WP considered in this calculation.

The number of digits in the values cited herein may be the result of a calculation or may reflect the input from another source; consequently, the number of digits should not be interpreted as an indication of accuracy.

5.1.1 Disposal Container

The disposal container consists of the inner reinforcement cylinder, the corrosion resistant outer shell, the inner shell lids, and the outer corrosion resistant shell lids. Table 1 presents the thickness and material specifications for the components of the disposal container, as indicated in sketches SK-0219 REV 01, page 24, and for the basket assembly that accommodates 44 BWR assemblies, as presented in SK-0192 REV 00, page 1. Tables 2 through 6 present the chemical compositions for the structural materials shown in Table 1.

Table 1. Geometry and Material Specifications for the Disposal Container

Component	Material	Characteristic	Dimension (mm)
Inner shell	SA-240 S31600	Thickness	50
Outer shell	SB-575 N06022	Thickness	20
Inner shell bottom lid	SA-240 S31600	Thickness	88.9
Inner shell top lid	SA-240 S31600	Thickness	50.8
Outer shell flat bottom lid	SB-575 N06022	Thickness	25.4
Extended outer shell lid base	SB-575 N06022	Thickness	25.4
Outer shell flat closure lid	SB-575 N06022	Thickness	9.525
Top upper closure gap	Air	Thickness	30.08
Top lower closure gap	Air	Thickness	44.225
Bottom lid gap	Air	Thickness	70
Cavity	Air	Length	4,585
		Inner diameter	1,454
Basket B-sideguide	SA-516 K02700	Thickness	10
Basket cornerguide	SA-516 K02700	Thickness	10
Basket stiffener	SA-516 K02700	Thickness	10
Basket B-stiffener	SA-516 K02700	Thickness	10
Fuel basket A-plate	Neutronit A 978	Thickness	5
Fuel basket B-plate	Neutronit A 978	Thickness	5
Fuel basket C-plate	Neutronit A 978	Thickness	5
Fuel basket D-plate	Neutronit A 978	Thickness	5
Fuel basket E-plate	Neutronit A 978	Thickness	5
Fuel basket F-plate	SB-209 A96061 T4	Thickness	5
Fuel basket G-plate	SB-209 A96061 T4	Thickness	5
Basket assembly	N/A	Length	4,575
Fuel basket tube	SA-516 K02700	Thickness	5
		Inner transverse dimension	155.3

SOURCE: Sketch SK-0219 REV 01, page 24 (see Attachment I), and SK-0192 REV 00, page 1 (see Attachment II).
NOTE: The thicknesses of the top lids used in this calculation slightly differ from those shown in sketch SK-0219 REV 01. However, the total thickness of the top lids used in this calculation is 85 mm, which is 0.725 less than the actual value indicated by the sketch, and provides higher (conservative) dose rates at the top surface of the waste package. Moreover, for conservative evaluations (higher dose rates), the thicknesses of the inner shell, the outer shell, and lids are reduced by 0.25 mm each to account for permissible variations in thickness (ASME 1998, Section II-B, SB-575, page 762, and Section II-A, SA-480, page 877). The loose fit between the inner and outer shells is neglected to obtain slightly higher (conservative) dose rates at the external radial surface.

Table 2. Chemical Composition of SA-516 K02700

Element	Weight Percent Range[a]	Value Used
Carbon	0.27 (max)	0.27
Manganese	0.85-1.20	1.025
Phosphorus	0.035 (max)	0.035
Sulfur	0.035 (max)	0.035
Silicon	0.15-0.40	0.275
Iron	Balance	98.36
Density[b] = 7.85 g/cm^3		

SOURCE: [a] ASME 1998, Section II-A, SA-516, page 925.
[b] ASME 1998, Section II-A, SA-20, page 67.

Table 3. Chemical Composition of SA-240 S31600

Element	Weight Percent Range[a]	Value Used
Carbon	0.03 (max)	0.03
Manganese	2.00 (max)	2.00
Phosphorus	0.045 (max)	0.045
Sulfur	0.03 (max)	0.03
Silicon	0.75 (max)	0.75
Chromium	16.00-18.00	17.00
Nickel	10.00-14.00	12.00
Molybdenum	2.00-3.00	2.50
Nitrogen	0.10 (max)	0.10
Iron	Balance	65.495
Density[b] = 7.98 g/cm^3		

SOURCE: [a] ASME 1998, Section II-A, SA-240, page 366.
[b] ASTM G 1-90, page 7.

Table 4. Chemical Composition of SB-575 N06022

Element	Weight Percent Range	Value Used
Carbon	0.015 (max)	0.015
Manganese	0.50 (max)	0.50
Silicon	0.08 (max)	0.08
Chromium	20.0-22.5	21.25
Molybdenum	12.5-14.5	13.50
Cobalt	2.50 (max)	2.50
Tungsten	2.5-3.5	3.00
Vanadium	0.35 (max)	0.35
Iron	2.0-6.0	4.00
Phosphorus	0.02 (max)	0.02
Sulfur	0.02 (max)	0.02
Nickel	Balance	54.765
Density = 8.69 g/cm^3		

SOURCE: ASME 1998, Section II-B, SB-575, pages 760 and 761.

The chemical composition of Neutronit A976 is assumed for Neutronit A978 in this calculation (see Assumption 3.6).

Table 5. Chemical Composition of Neutronit A976

Element	Weight Percent Range[a]	Value Used
Carbon	0.04 (max)	0.04
Chromium	18.5	18.5
Nickel	13.0	13.0
Cobalt	0.20 (max)	0.20
Boron	According to specifications	0.75-1.74[b]
Iron	Balance	67.51 or 66.52
Density[a] = 7.76 g/cm^3		

SOURCE: [a] Kugler 1996, pages 14 and 17.
[b] ASTM A 887-89, page 2.

NOTE: The range of boron content is determined based on those for ASTM A887 types B3 to B6. For conservative (slightly higher) results, 0.75-wt% B is used in the neutron dose rate calculations, and 1.74-wt% B is used in the gamma dose calculations. The natural isotopic content of boron in calculations is 19.9-at% ^{10}B and 80.1-at% ^{11}B (Parrington et al. 1996).

Table 6. Chemical Composition of SB-209 A96061

Element	Weight Percent Range[a]	Value Used
Silicon	0.4-0.8	0.6
Iron	0.7 (max)	0.7
Copper	0.15-0.4	0.275
Manganese	0.15 (max)	0.15
Magnesium	0.8-1.2	1.0
Chromium	0.04-0.35	0.195
Zinc[c]	0.25 (max)	0.25
Titanium	0.15 (max)	0.15
Others (each)	0.05 (max)	0.0
Others (total)	0.15 (max)	0.0
Aluminum	Balance	96.68
Density[b] = 2.7 g/cm^3		

SOURCE: [a] ASME 1998, Section II-B, SB-209, page 236.
[b] ASME 1998, Section II-D, Subpart 2, pages 611 and 612.
NOTE: [c] MCNP does not contain neutron cross-section tables for Zn. Al replaces Zn in this calculation because these two elements have similar neutron cross sections.

5.1.2 BWR SNF Assemblies

The BWR SNF assembly used in this calculation is a General Electric (GE) 2/3 8x8 BWR SNF assembly. CRWMS M&O (1999) provides radiation source term calculations (including the gamma and neutron source terms) and the physical characteristics for this representative BWR assembly. Table 7 presents the light element contents and dimensions for each fuel region. Tables 8, 9, and 10 present the gamma and neutron sources for the bounding BWR SNF, the hypothetical bounding BWR SNF, and the average BWR SNF. The initial uranium content, enrichment, burnup, and decay characteristics of the three BWR SNFs are described in Sections 2 and 5.2.

Table 7. Light Element Mass and Dimensions by Fuel Region for a GE 2/3 8x8 BWR Assembly

Element	Mass[a] (kg)			
	Bottom End-Fitting Region	Active Fuel Region	Plenum Region	Top End-Fitting Region
Oxygen	0.0008	0.050526 + 0.041131 + 0.003732 + 0.00234 = 0.097729	0.0074	0.0012
Aluminum	N/A	0.0023	0.0119	0.0041
Carbon	0.0038	0.0002	0.0015	0.0019
Cobalt	0.0038	0.0033	0.0175	0.0074
Chromium	0.9069	0.1302	0.3784	0.4680
Copper	N/A	0.0013	0.0068	0.0023
Iron	3.2208	0.1889	0.5649	1.3982
Manganese	0.0954	0.0026	0.0259	0.0446
Niobium	N/A	0.0033	0.0170	0.0058
Nitrogen	0.0048	N/A	0.0006	0.0020
Nickel	0.4970	0.2646	1.2610	0.6157
Phosphorus	0.0021	N/A	0.0003	0.0009
Sulfur	0.0014	N/A	0.0004	0.0007
Silicon	0.0358	0.0013	0.0114	0.0173
Tin	0.0111	1.3845	0.1055	0.0169
Titanium	N/A	0.0078	0.0408	0.0139
Zirconium	0.6374	79.6784	6.0704	0.9739
Width[b] (cm)	13.81252[c]	13.81252	13.81252	13.81252
Length[b] (cm)	18.7579	365.76[d]	28.5496	22.2885

SOURCE: [a] CRWMS M&O 1999, Attachment IIR01, page II-11.
[b] CRWMS M&O 1999, page 12.
NOTES: [c] Calculated: 13.40612 (CRWMS M&O 1999, page 12) + 2*0.2032 (CRWMS M&O 1999, page 12).
[d] Calculated: 435.356 (CRWMS M&O 1999, page 12) – 18.7579 – 28.5496 – 22.2885.

Table 8. Gamma and Neutron Sources per Assembly for the Bounding BWR SNF

Gamma Intensity (photons/s)					Neutron Intensity (neutrons/s)	
Upper Energy Boundary (MeV)	Bottom End-Fitting Region	Active Fuel Region	Plenum Region	Top End-Fitting Region	Upper Energy Boundary (MeV)	Active Fuel Region
5.00E-02	3.65E+11	8.13E+14	7.64E+11	3.81E+11	1.00E-08	0.0000E+00
1.00E-01	8.53E+10	2.26E+14	1.50E+11	8.85E+10	3.00E-08	0.0000E+00
2.00E-01	1.51E+11	1.76E+14	1.74E+11	1.52E+11	5.00E-08	0.0000E+00
3.00E-01	2.50E+10	5.06E+13	2.61E+10	2.50E+10	1.00E-07	0.0000E+00
4.00E-01	2.30E+09	3.38E+13	4.96E+09	2.35E+09	2.25E-07	0.0000E+00
6.00E-01	3.20E+10	4.22E+14	6.89E+10	3.20E+10	3.25E-07	0.0000E+00
8.00E-01	9.93E+10	1.59E+15	1.19E+11	9.94E+10	4.00E-07	0.0000E+00
1.00E+00	1.33E+11	1.96E+14	1.11E+11	1.12E+11	8.00E-07	0.0000E+00
1.33E+00	4.01E+12	6.61E+13	2.28E+13	4.96E+12	1.00E-06	0.0000E+00
1.66E+00	1.09E+12	1.86E+13	6.40E+12	1.36E+12	1.13E-06	0.0000E+00
2.00E+00	1.57E+07	3.63E+11	1.57E+07	1.57E+07	1.30E-06	0.0000E+00
2.50E+00	2.56E+07	5.97E+11	1.52E+08	3.20E+07	1.77E-06	0.0000E+00
3.00E+00	3.97E+04	2.55E+10	2.35E+05	4.96E+04	3.05E-06	0.0000E+00
4.00E+00	1.51E-10	3.21E+09	2.82E-10	1.74E-10	1.00E-05	0.0000E+00
5.00E+00	3.83E-11	1.60E+07	3.82E-11	3.82E-11	3.00E-05	0.0000E+00
6.50E+00	1.10E-11	6.41E+06	1.10E-11	1.10E-11	1.00E-04	0.0000E+00
8.00E+00	1.40E-12	1.26E+06	1.40E-12	1.40E-12	5.50E-04	0.0000E+00
10.00E+00	1.87E-13	2.67E+05	1.87E-13	1.87E-13	3.00E-03	0.0000E+00
Total	5.9929E+12	3.5931E+15	3.0618E+13	7.2123E+12	1.70E-02	0.0000E+00
N/A	N/A	N/A	N/A	N/A	1.00E-01	0.0000E+00
N/A	N/A	N/A	N/A	N/A	4.00E-01	1.79E+07
N/A	N/A	N/A	N/A	N/A	9.00E-01	9.16E+07
N/A	N/A	N/A	N/A	N/A	1.40E+00	8.38E+07
N/A	N/A	N/A	N/A	N/A	1.85E+00	6.17E+07
N/A	N/A	N/A	N/A	N/A	3.00E+00	1.09E+08
N/A	N/A	N/A	N/A	N/A	6.43E+00	9.89E+07
N/A	N/A	N/A	N/A	N/A	20.00E+00	8.76E+06
N/A	N/A	N/A	N/A	N/A	Total	4.7166E+08

SOURCE: CRWMS M&O 1999, Attachment VII, BWR.gamma.source and BWR.neutron source files.
NOTE: Initial ^{235}U weight percent of 5.5; average burnup of 75 GWd/MTU; and decay time of 5 years.

Table 9. Gamma and Neutron Sources per Assembly for the Hypothetical Bounding BWR SNF

Gamma Intensity (photons/s)					Neutron Intensity[a] (neutrons/s)	
Upper Energy Boundary (MeV)	Bottom End-Fitting Region[b]	Active Fuel Region[a]	Plenum Region[b]	Top End-Fitting Region[b]	Upper Energy Boundary (MeV)	Active Fuel Region
5.00E-02	3.39E+11	8.13E+14	9.71E+11	3.62E+11	1.00E-08	0.0000E+00
1.00E-01	7.87E+10	2.26E+14	1.85E+11	8.35E+10	3.00E-08	0.0000E+00
2.00E-01	1.11E+11	1.76E+14	1.46E+11	1.12E+11	5.00E-08	0.0000E+00
3.00E-01	1.90E+10	5.06E+13	2.08E+10	1.90E+10	1.00E-07	0.0000E+00
4.00E-01	2.08E+09	3.38E+13	5.97E+09	2.16E+09	2.25E-07	0.0000E+00
6.00E-01	2.51E+10	4.22E+14	7.45E+10	2.51E+10	3.25E-07	0.0000E+00
8.00E-01	7.15E+10	1.59E+15	9.81E+10	7.16E+10	4.00E-07	0.0000E+00
1.00E+00	1.07E+11	1.96E+14	8.24E+10	8.22E+10	8.00E-07	0.0000E+00
1.33E+00	6.68E+12	6.61E+13	3.76E+13	8.08E+12	1.00E-06	0.0000E+00
1.66E+00	1.86E+12	1.86E+13	1.06E+13	2.25E+12	1.13E-06	0.0000E+00
2.00E+00	1.03E+07	3.63E+11	1.03E+07	1.03E+07	1.30E-06	0.0000E+00
2.50E+00	4.40E+07	5.97E+11	2.51E+08	5.34E+07	1.77E-06	0.0000E+00
3.00E+00	6.82E+04	2.55E+10	3.89E+05	8.27E+04	3.05E-06	0.0000E+00
4.00E+00	1.04E-10	3.21E+09	6.79E-10	2.03E-10	1.00E-05	0.0000E+00
5.00E+00	2.64E-11	1.60E+07	2.64E-11	2.64E-11	3.00E-05	0.0000E+00
6.50E+00	7.60E-12	6.41E+06	7.59E-12	7.59E-12	1.00E-04	0.0000E+00
8.00E+00	9.67E-13	1.26E+06	9.66E-13	9.66E-13	5.50E-04	0.0000E+00
10.00E+00	1.29E-13	2.67E+05	1.29E-13	1.29E-13	3.00E-03	0.0000E+00
Total	9.2934E+12	3.5931E+15	4.9784E+13	1.1088E+13	1.70E-02	0.0000E+00
N/A	N/A	N/A	N/A	N/A	1.00E-01	0.0000E+00
N/A	N/A	N/A	N/A	N/A	4.00E-01	1.79E+07
N/A	N/A	N/A	N/A	N/A	9.00E-01	9.16E+07
N/A	N/A	N/A	N/A	N/A	1.40E+00	8.38E+07
N/A	N/A	N/A	N/A	N/A	1.85E+00	6.17E+07
N/A	N/A	N/A	N/A	N/A	3.00E+00	1.09E+08
N/A	N/A	N/A	N/A	N/A	6.43E+00	9.89E+07
N/A	N/A	N/A	N/A	N/A	20.00E+00	8.76E+06
N/A	N/A	N/A	N/A	N/A	Total	4.7166E+08

SOURCE: CRWMS M&O 1999, Attachment VII, BWR.gamma.source and BWR.neutron source files.
NOTE: [a] Initial ^{235}U weight percent of 5.5; average burnup of 75 GWd/MTU; and decay time of 5 years.
[b] Initial ^{235}U weight percent of 0.711; average burnup of 75 GWd/MTU; and decay time of 5 years.

Table 10. Gamma and Neutron Sources per Assembly for the Average BWR SNF

Gamma Intensity (photons/s)					Neutron Intensity (neutrons/s)	
Upper Energy Boundary (MeV)	Bottom-End Fitting	Active Fuel Region	Plenum Region	Top-End Fitting	Upper Energy Boundary (MeV)	Active Fuel Region
5.00E-02	4.34E+10	2.48E+14	7.21E+10	4.48E+10	1.00E-08	0.0000E+00
1.00E-01	5.79E+09	7.24E+13	1.12E+10	6.07E+09	3.00E-08	0.0000E+00
2.00E-01	2.83E+10	4.71E+13	2.96E+10	2.83E+10	5.00E-08	0.0000E+00
3.00E-01	5.40E+09	1.45E+13	5.47E+09	5.40E+09	1.00E-07	0.0000E+00
4.00E-01	4.40E+08	9.92E+12	5.42E+08	4.45E+08	2.25E-07	0.0000E+00
6.00E-01	6.32E+09	7.95E+12	6.70E+09	6.32E+09	3.25E-07	0.0000E+00
8.00E-01	2.13E+10	4.47E+14	2.19E+10	2.14E+10	4.00E-07	0.0000E+00
1.00E+00	2.24E+10	3.93E+12	2.29E+10	2.25E+10	8.00E-07	0.0000E+00
1.33E+00	3.52E+11	6.31E+12	1.92E+12	4.35E+11	1.00E-06	0.0000E+00
1.66E+00	9.01E+10	7.20E+11	5.32E+11	1.13E+11	1.13E-06	0.0000E+00
2.00E+00	3.43E+06	2.54E+10	3.43E+06	3.43E+06	1.30E-06	0.0000E+00
2.50E+00	2.09E+06	1.30E+09	1.26E+07	2.64E+06	1.77E-06	0.0000E+00
3.00E+00	3.24E+03	6.66E+07	1.95E+04	4.10E+03	3.05E-06	0.0000E+00
4.00E+00	2.00E-10	4.21E+06	2.27E-10	2.05E-10	1.00E-05	0.0000E+00
5.00E+00	5.06E-11	1.41E+06	5.06E-11	5.06E-11	3.00E-05	0.0000E+00
6.50E+00	1.46E-11	5.67E+05	1.46E-11	1.46E-11	1.00E-04	0.0000E+00
8.00E+00	1.85E-12	1.11E+05	1.85E-12	1.85E-12	5.50E-04	0.0000E+00
10.00E+00	2.47E-13	2.36E+04	2.47E-13	2.47E-13	3.00E-03	0.0000E+00
Total	5.7546E+11	8.5786E+14	2.6224E+12	6.8324E+11	1.70E-02	0.0000E+00
N/A	N/A	N/A	N/A	N/A	1.00E-01	0.0000E+00
N/A	N/A	N/A	N/A	N/A	4.00E-01	1.58E+06
N/A	N/A	N/A	N/A	N/A	9.00E-01	8.06E+06
N/A	N/A	N/A	N/A	N/A	1.40E+00	7.42E+06
N/A	N/A	N/A	N/A	N/A	1.85E+00	5.54E+06
N/A	N/A	N/A	N/A	N/A	3.00E+00	1.00E+07
N/A	N/A	N/A	N/A	N/A	6.43E+00	8.86E+06
N/A	N/A	N/A	N/A	N/A	20.00E+00	7.68E+05
N/A	N/A	N/A	N/A	N/A	Total	4.2228E+07

SOURCE: CRWMS M&O 1999, Attachment VII, BWR.gamma.source and BWR.neutron source files.
NOTE: Initial ^{235}U weight percent of 3.5; average burnup of 40 GWd/MTU; and decay time of 22 years (see Assumption 3.3).

5.2 DESCRIPTION OF CALCULATIONS

5.2.1 Selection of Source Terms

This calculation provides surface dose rates for the 44-BWR WP containing SNF with the following initial enrichment, burnup, and decay characteristics:

- 5.5-wt% initial ^{235}U enrichment, 75.0-GWd/MTU burnup, and 5-year decay time. Surface dose rates for the WP without the basket assembly inside (see Figure 3) are also calculated.

- 5.5-wt% initial ^{235}U enrichment, 75.0-GWd/MTU burnup, and 5-year decay time for the active fuel region, and 0.711-wt% initial enrichment, 75.0-GWd/MTU burnup, and 5-year decay time for the hardware regions. Since for a given burnup the activation of the hardware regions increases with decreasing initial fuel enrichment, this hypothetical SNF provides upper limits for dose rates due to the hardware regions.

- 3.5-wt% initial ^{235}U enrichment, 40-GWd/MTU burnup, and 22-year decay time. The SNF with these characteristics provides conservative dose rate estimations for the average BWR SNF (see Assumption 3.3). Surface dose rates for a WP containing average SNF are useful for estimating the radiation exposure of the surrounding equipment.

5.2.2 Geometric Representation of the Source Regions

The BWR SNF assemblies contain four distinct source regions: a bottom end-fitting region, an active fuel region, a plenum region, and a top end-fitting region. Each assembly region is homogenized inside its volume (see Figures 1 through 3), resulting in a uniform distribution of the region contents and radiation source inside each region volume (See Assumption 3.2). The study of source geometry effect (CRWMS M&O 1998b) on the surface dose rates for a WP containing 21 PWR SNF assemblies has shown that the detailed representation of the SNF assemblies and the assemblies homogenized inside their transverse dimensions give essentially the same surface dose rates. The MCNP input file specifies these four gamma sources through source distribution numbers that are dependent on geometric cells. Attachment IV provides the fraction of gamma sampling in each assembly region, required by the source probability (sp) card, and the total gamma source intensity, required by the tally multiplier (fm) card.

5.2.3 Material Specification in the MCNP Input

MCNP requires element/isotope compositions of the materials either as weight fractions or atomic densities. The material compositions of the assembly regions are entered as atomic densities, in atoms/b·cm, in the MCNP input. Atomic densities (AD) of the material compositions in each assembly region are calculated according to the following equation (Harmon et al. 1994, Appendix B):

$$\text{AD (atoms/b}\cdot\text{cm)} = \frac{\text{mass}_{\text{isotope}}\,(\text{g}) * \text{N}_{\text{A}}\,(\text{atoms/mole})}{10^{24}\,(\text{b/cm}^2) * \text{volume}_{\text{region}}\,(\text{cm}^3) * \text{atomic mass}_{\text{isotope}}\,(\text{g/mole})} \qquad \text{(Eq. 1)}$$

In the above equation, N_A is the Avogadro constant, which has a value of 6.0221367E+23 atoms per mole (Parrington et al. 1996, page 59). The element or isotope atomic masses are provided in Parrington et al. 1996.

The isotopic composition, in weight percent, for commercially available enriched uranium is calculated according to the following equations (Bowman et al. 1995, page 20):

$$\text{wt\% } ^{234}\text{U} = 0.007731(\text{wt\% } ^{235}\text{U})^{1.0837}$$

$$\text{wt\% } ^{236}\text{U} = 0.0046(\text{wt\%}^{235}\text{U}) \qquad \text{(Eq. 2)}$$

$$\text{wt\% } ^{238}\text{U} = 100 - (\text{wt\% } ^{234}\text{U}) - (\text{wt\% } ^{235}\text{U}) - (\text{wt\% } ^{236}\text{U})$$

The calculation of the atomic densities for each assembly region is presented in Attachment III.

5.2.4 Calculation of the Total Dose Rate

MCNP estimates the gamma or the neutron flux averaged over a surface, and then calculates the surface dose rates in rem/h. The surface dose rate for a certain energy group is the product of the group flux and the flux-to-dose rate conversion factor for the energy group (Briesmeister 1997, pages H-5 and H-6).

Since MCNP performs the photon and neutron transport in two separate runs, the total dose rate is the sum of gamma and neutron dose rates. The estimated relative error of the total dose rate is derived from the estimated variance of the total dose rate. The estimated variance of the total dose rate, S^2_{total}, is the sum of the estimated variances of the individual dose rates, S_i^2. The estimated relative error (Briesmeister 1997, p. 2-93) is given by:

$$\text{DR}_{\text{total}} = \text{DR}_{\text{gamma}} + \text{DR}_{\text{neutron}} \qquad \text{(Eq. 3)}$$

$$S^2_{\text{total}} = S^2_{\text{gamma}} + S^2_{\text{neutron}} \qquad \text{(Eq. 4)}$$

$$R = \frac{\sqrt{S^2_{\text{total}}}}{\text{DR}_{\text{total}}} \qquad \text{(Eq. 5)}$$

where

DR = estimated dose rate (rem/h)
S^2 = estimated variance $(rem/h)^2$
R = estimated relative error

5.2.5 Segments Selected for Surface Dose Rate Calculations

Surface dose rates are calculated for the radial and axial directions of the WP. For each direction, dose rates are determined for segments (see Figures 4, 5, and 6) of the following five surfaces: inner surface of the inner shell, inner surface of the outer shell, WP outer surface, and surfaces at 1 m and 2 m from WP outer surface. Segments 1 to 9 are axial segments that subdivide the five radial surfaces. Segment 1, 23.144-cm tall, corresponds to the void region above fuel assemblies. Segment 2, 22.2885-cm tall, corresponds to the top end-fitting region. Segment 3, 28.5496-cm tall, corresponds to the plenum region. Five segments, Segments 4 to 8, each 73.152-cm tall, are equal segments of the active fuel region. The last axial segment, Segment 9, 18.7579-cm tall, corresponds to the bottom end-fitting region. The top surface of the WP cavity has six segments, Segments 14 to 19, as shown in Figure 5. Figure 6 shows the four segments, Segments 14, 20, 21, and 22, of the bottom surface of the upper outer lid. The bottom surface of the WP cavity, and the bottom surface of the lower inner lid are divided in two segments by a 20-cm radius. The WP top and bottom surfaces and the top and bottom surfaces 1 m from the WP have three segments: Segments 10 to 12. The top and bottom surfaces 2 m from the WP also have three segments: Segments 10, 11, and 13.

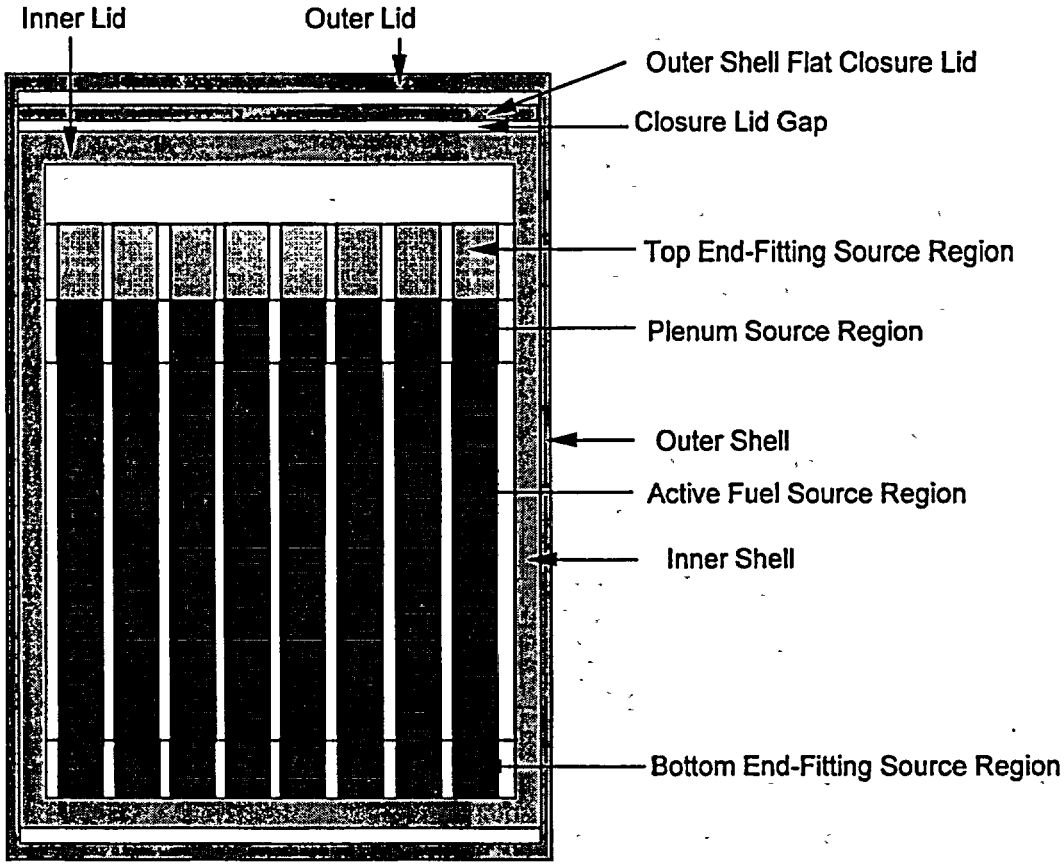

NOTE: Drawing not to scale.

Figure 1. Source Region Representation in MCNP Calculations

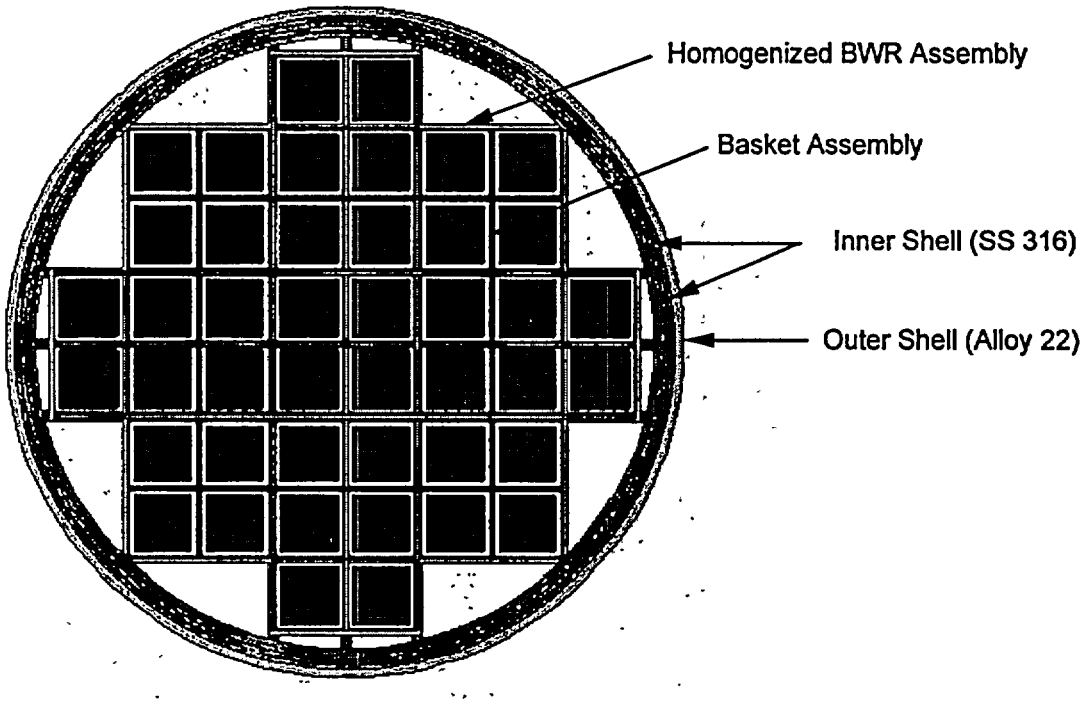

NOTE: The extra-cell shown for the inner shell has been created for geometric importance sampling in MCNP.

Figure 2. Lateral View of WP with Basket Assembly for MCNP Calculations

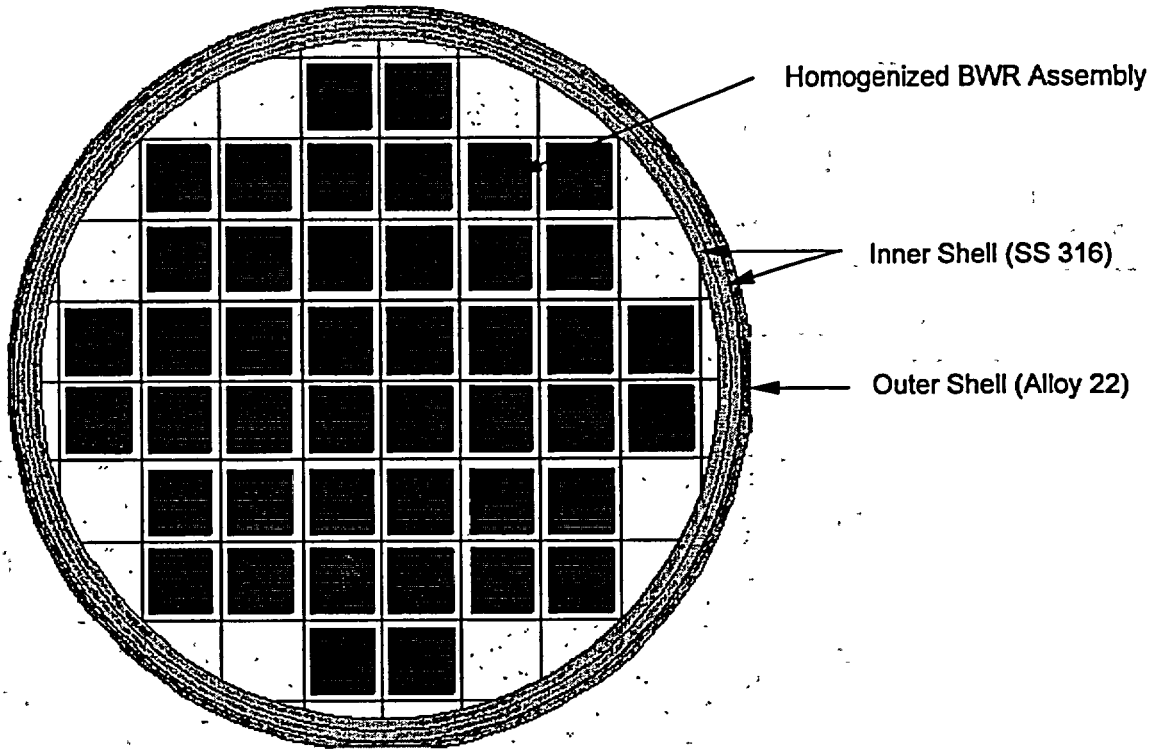

NOTE: The extra-cell shown for the inner shell has been created for geometric importance sampling in MCNP.

Figure 3. Lateral View of WP Without Basket Assembly for MCNP Calculations

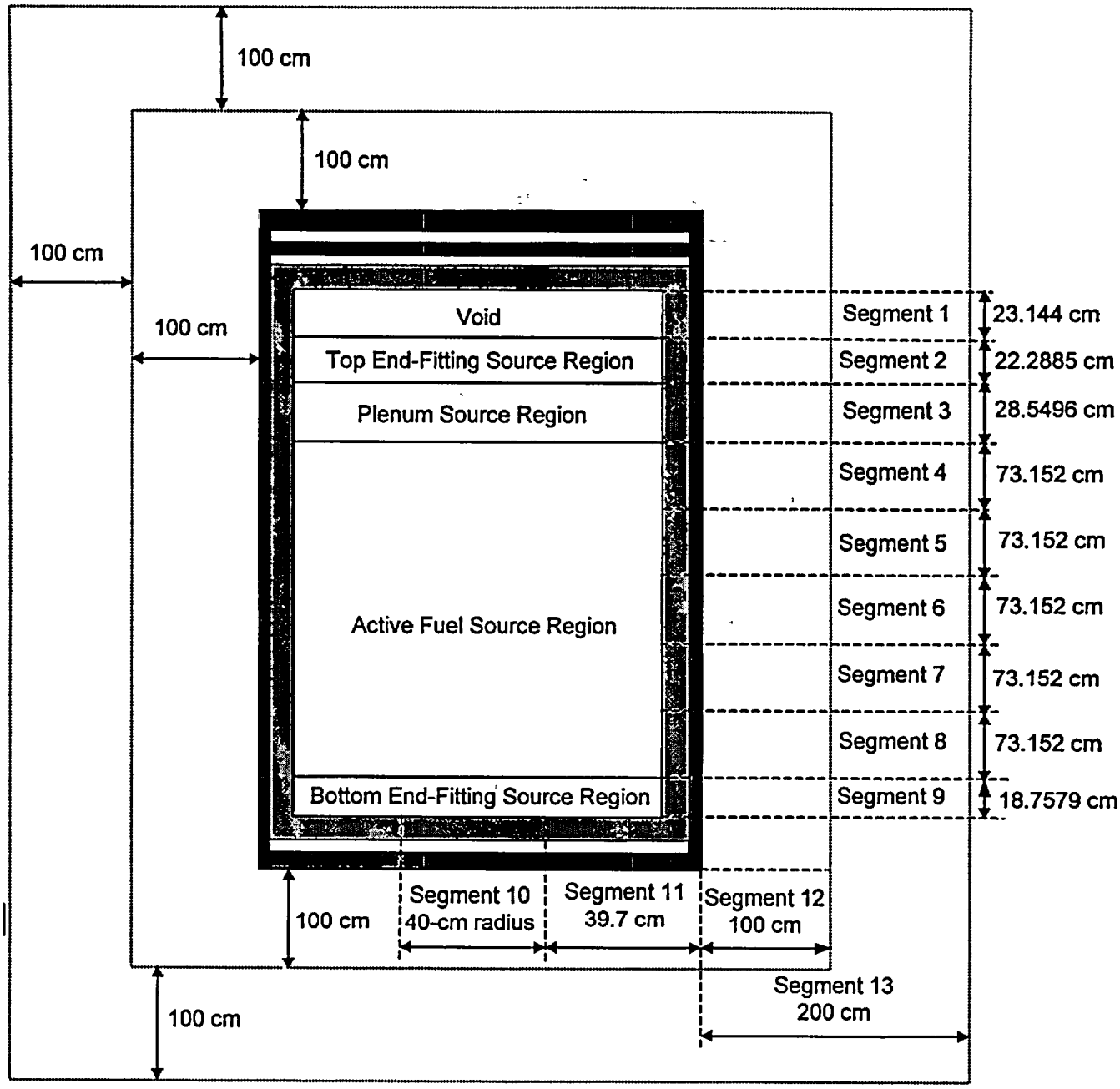

NOTES: [a] Drawing not to scale.
[b] The segments used in dose calculations for the top surface of the WP cavity and bottom surface of the outer top lid are presented in Figures 5 and 6.

Figure 4. Surface Segments Used for Dose Rate Calculations

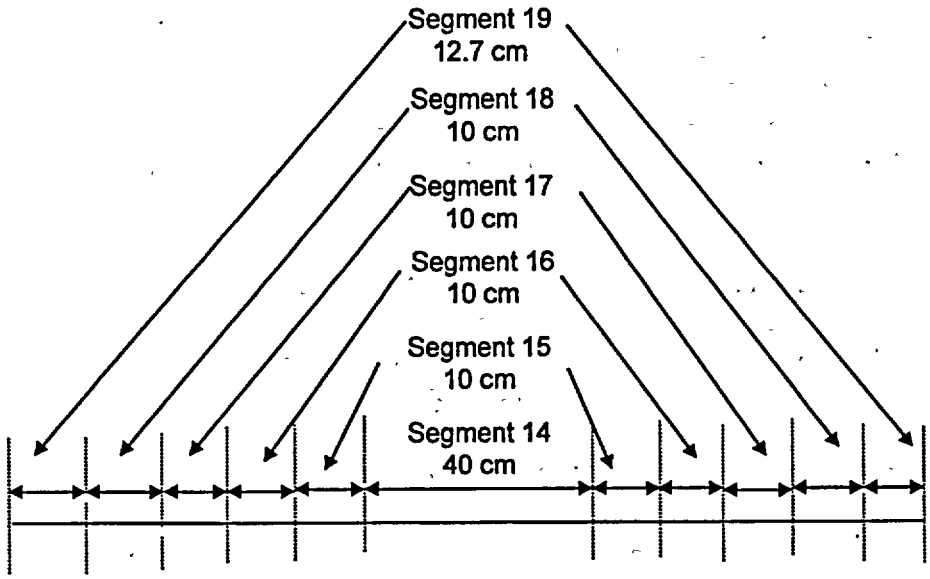

NOTE: Drawing not to scale.

Figure 5. Segments of the Top Surface of the WP Cavity Used in Dose Rate Calculations

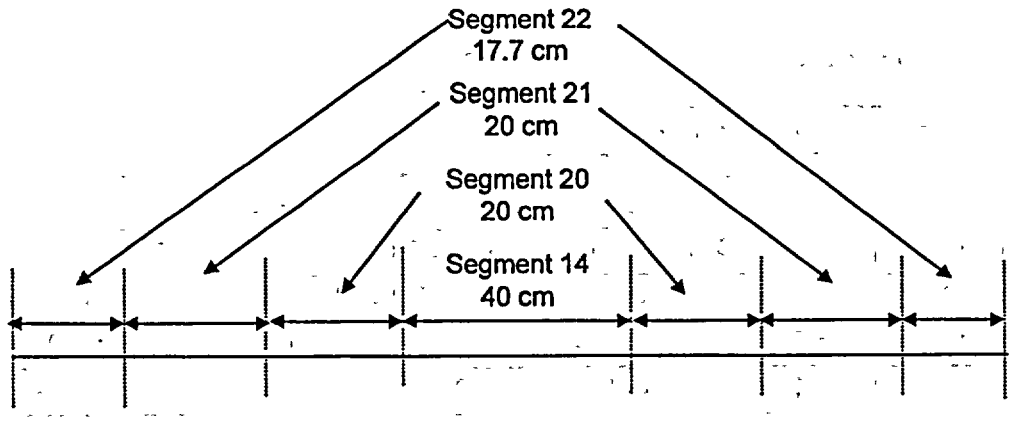

NOTE: Drawing not to scale.

Figure 6. Segments of the Bottom Surface of the Top Outer Lid Used in Dose Rate Calculations

6. RESULTS

The tables included in this section present the gamma and neutron surface dose rates calculated by MCNP, the total surface dose rates calculated using Equation 3, and its associated relative error calculated using Equations 4 and 5. The results presented in Tables 11 through 34 are based on unqualified information (radiation source terms and element compositions of the hardware regions) that requires confirmation.

This document may be affected by technical product input information that requires confirmation. Any changes to the document that may occur as a result of completing the confirmation activities will be reflected in subsequent revisions. The status of the technical product input information quality may be confirmed by review of the DIRS database.

6.1 BOUNDING SOURCE FOR THE ACTIVE FUEL REGION

This section presents surface dose rates for the WP containing BWR SNF with the following characteristics: 5.5-wt% initial ^{235}U, 75.0-GWd/MTU burnup, and a 5-year decay time. The source terms for the BWR SNF assembly with these burnup and decay characteristics generate conservative (higher) surface dose rates only for the active fuel region.

6.1.1 Basket Assembly Inside the WP

Tables 11 through 16 present surface dose rates averaged over segments of the radial and axial surfaces of the 44-BWR WP (see Figures 4, 5, and 6 for segment locations). The WP contains the basket assembly inside.

Table 11. Dose Rates on the Inner Surface of the Inner Shell: Bounding BWR SNF

Axial Location	Gamma		Neutron		Total	
	Dose Rate (rem/h)	Relative Error	Dose Rate (rem/h)	Relative Error	Dose Rate (rem/h)	Relative Error
Segment 1	5.6240E+03	0.0216	5.6550E+00	0.0108	5.6297E+03	0.0216
Segment 2	1.3850E+04	0.0127	9.0073E+00	0.0089	1.3859E+04	0.0127
Segment 3	2 8091E+04	0.0076	1.7809E+01	0.0059	2.8109E+04	0.0076
Segment 4	3.3824E+04	0.0040	4.1334E+01	0.0028	3.3866E+04	0.0040
Segment 5	3.6222E+04	0.0039	5.1651E+01	0.0024	3.6273E+04	0.0039
Segment 6	3.4280E+04	0.0040	5.2248E+01	0.0024	3.4332E+04	0.0040
Segment 7	3.4250E+04	0.0040	5.1225E+01	0.0024	3.4301E+04	0.0040
Segment 8	3.4499E+04	0.0040	4.2353E+01	0.0027	3.4541E+04	0.0040
Segment 9	1.3655E+04	0.0129	2.1052E+01	0.0064	1.3676E+04	0.0129

Table 12. Dose Rates on the Inner Surface of the Outer Shell: Bounding BWR SNF

Axial Location	Gamma		Neutron		Total	
	Dose Rate (rem/h)	Relative Error	Dose Rate (rem/h)	Relative Error	Dose Rate (rem/h)	Relative Error
Segment 1	4.7359E+02	0.0285	2.5325E+00	0.0101	4.7613E+02	0.0283
Segment 2	1.3867E+03	0.0173	4.1106E+00	0.0082	1.3908E+03	0.0172
Segment 3	2.8038E+03	0.0108	8.5294E+00	0.0055	2.8123E+03	0.0108
Segment 4	2.3870E+03	0.0061	2.0281E+01	0.0025	2.4073E+03	0.0060
Segment 5	2.4463E+03	0.0059	2.5212E+01	0.0023	2.4715E+03	0.0058
Segment 6	2.3220E+03	0.0060	2.5409E+01	0.0022	2.3474E+03	0.0059
Segment 7	2.3566E+03	0.0060	2.5092E+01	0.0023	2.3817E+03	0.0059
Segment 8	2.3943E+03	0.0060	2.0747E+01	0.0025	2.4151E+03	0.0059
Segment 9	1.0196E+03	0.0198	1.0088E+01	0.0060	1.0297E+03	0.0196

Table 13. Dose Rates on the WP Outer Radial Surface: Bounding BWR SNF

Axial Location	Gamma		Neutron		Total	
	Dose Rate (rem/h)	Relative Error	Dose Rate (rem/h)	Relative Error	Dose Rate (rem/h)	Relative Error
Segment 1	1.5803E+02	0.0322	1.0552E+00	0.0104	1.5908E+02	0.0320
Segment 2	4.7215E+02	0.0193	1.7524E+00	0.0082	4.7391E+02	0.0192
Segment 3	9.3639E+02	0.0124	3.7641E+00	0.0054	9.4015E+02	0.0124
Segment 4	6.6595E+02	0.0074	9.0982E+00	0.0025	6.7505E+02	0.0073
Segment 5	6.6738E+02	0.0072	1.1251E+01	0.0022	6.7863E+02	0.0071
Segment 6	6.3107E+02	0.0074	1.1320E+01	0.0022	6.4239E+02	0.0073
Segment 7	6.4482E+02	0.0073	1.1173E+01	0.0022	6.5599E+02	0.0072
Segment 8	6.5222E+02	0.0073	9.3195E+00	0.0025	6.6154E+02	0.0072
Segment 9	3.0889E+02	0.0239	4.4262E+00	0.0059	3.1332E+02	0.0236

Table 14. Dose Rates on a Radial Surface 1 m from the WP: Bounding BWR SNF

Axial Location	Gamma		Neutron		Total	
	Dose Rate (rem/h)	Relative Error	Dose Rate (rem/h)	Relative Error	Dose Rate (rem/h)	Relative Error
Segment 1	1.1905E+02	0.0136	9.5257E-01	0.0038	1.2001E+02	0.0135
Segment 2	1.5726E+02	0.0119	1.2358E+00	0.0034	1.5850E+02	0.0118
Segment 3	1.9705E+02	0.0098	1.6124E+00	0.0027	1.9866E+02	0.0097
Segment 4	2.3312E+02	0.0061	2.3553E+00	0.0017	2.3548E+02	0.0060
Segment 5	2.3958E+02	0.0055	3.0799E+00	0.0015	2.4265E+02	0.0054
Segment 6	2.3687E+02	0.0054	3.2863E+00	0.0014	2.4016E+02	0.0053
Segment 7	2.3145E+02	0.0056	3.0768E+00	0.0015	2.3452E+02	0.0055
Segment 8	1.8594E+02	0.0064	2.3268E+00	0.0017	1.8827E+02	0.0063
Segment 9	1.2249E+02	0.0125	1.6262E+00	0.0032	1.2411E+02	0.0123

Table 15. Dose Rates on a Radial Surface 2 m from the WP: Bounding BWR SNF

Axial Location	Gamma		Neutron		Total	
	Dose Rate (rem/h)	Relative Error	Dose Rate (rem/h)	Relative Error	Dose Rate (rem/h)	Relative Error
Segment 1	7.5798E+01	0.0117	7.4946E-01	0.0032	7.6548E+01	0.0116
Segment 2	8.9118E+01	0 0114	8.5887E-01	0.0030	8.9977E+01	0.0113
Segment 3	1.0253E+02	0.0092	9.9650E-01	0.0025	1.0353E+02	0.0091
Segment 4	1.2334E+02	0.0059	1.2520E+00	0.0016	1.2459E+02	0.0058
Segment 5	1.3880E+02	0.0053	1.5344E+00	0.0014	1.4033E+02	0.0052
Segment 6	1.3821E+02	0.0052	1.6334E+00	0.0014	1.3984E+02	0.0051
Segment 7	1.2746E+02	0.0054	1.5300E+00	0.0014	1.2899E+02	0.0053
Segment 8	1.0089E+02	0.0061	1.2345E+00	0.0016	1.0212E+02	0.0060
Segment 9	7.7351E+01	0.0117	9.9713E-01	0.0030	7.8348E+01	0.0116

Table 16. Dose Rates on the Axial Surfaces: Bounding BWR SNF

Surface	Segment	Gamma		Neutron		Total	
		Dose Rate (rem/h)	Relative Error	Dose Rate (rem/h)	Relative Error	Dose Rate (rem/h)	Relative Error
Top of the WP cavity (See Figure 5)	Segment 14	1.1941E+04	0.0335	7.9158E+00	0.0205	1.1949E+04	0.0335
	Segment 15	1.1639E+04	0.0306	7.6218E+00	0.0181	1.1647E+04	0.0306
	Segment 16	1.0692E+04	0.0274	7.0729E+00	0.0159	1.0699E+04	0.0274
	Segment 17	9.4588E+03	0.0248	6.6457E+00	0.0143	9.4655E+03	0.0248
	Segment 18	7.7933E+03	0.0259	6.0892E+00	0.0137	7.7994E+03	0.0259
	Segment 19	4.7796E+03	0.0280	5.2235E+00	0.0127	4.7848E+03	0.0280
Bottom of the outer upper lid (See Figure 6)	Segment 14	1.0574E+03	0.0463	3.7255E+00	0.0191	1.0611E+03	0.0461
	Segment 20	9.3543E+02	0.0291	3.4376E+00	0.0123	9.3887E+02	0.0290
	Segment 21	7.3084E+02	0.0260	2.9058E+00	0.0104	7.3374E+02	0.0259
	Segment 22	3.2909E+02	0.0336	1.9195E+00	0.0113	3.3100E+02	0.0334
Top of WP (See Figure 4)	Segment 10	2.9987E+02	0.0309	1.4042E+00	0.0126	3.0127E+02	0.0308
	Segment 11	1.4838E+02	0.0260	8.9147E-01	0.0094	1.4927E+02	0.0258
	Segment 12	6.5519E+01	0.0157	5.4811E-01	0.0039	6.6067E+01	0.0156
1 m from the WP top (See Figure 4)	WP top surface	8.0962E+01	0.0249	2.5339E-01	0.0095	8.1216E+01	0.0248
	Segment 13	2.1402E+01	0.0116	2.4668E-01	0.0028	2.1649E+01	0.0115
2 m from the WP top (See Figure 4)	WP top surface	3.9909E+01	0.0316	1.0180E-01	0.0125	4.0010E+01	0.0315
	Segment 13	1.3474E+01	0.0159	1.2343E-01	0.0036	1.3598E+01	0.0158
Bottom of WP cavity (See Figure 4)	Segment 10	2.5455E+04	0.0170	4.7140E+01	0.0059	2.5502E+04	0.0170
	# Segment 10[a]	1.4324E+04	0.0151	1.5904E+01	0.0060	1.4340E+04	0.0151
Bottom of the inner lower lid (See Figure 4)	Segment 10	3.3287E+02	0.0328	1.1023E+01	0.0067	3.4389E+02	0.0317
	# Segment 10[b]	1.9752E+02	0.0267	6.5085E+00	0.0054	2.0403E+02	0.0258
Bottom of WP (See Figures 4 and 6)	Segment 10	9.2746E+01	0.0416	4.4811E+00	0.0073	9.7227E+01	0.0397
	Segment 11	4.8825E+01	0.0338	2.4348E+00	0.0058	5.1260E+01	0.0322
	Segment 12	6.5158E+01	0.0140	1.2149E+00	0.0031	6.6373E+01	0.0137
Surface 1 m from the WP bottom (See Figure 4)	WP bottom surface	2.4801E+01	0.0332	7.3213E-01	0.0057	2.5533E+01	0.0322
	Segment 13	1.5042E+01	0.0103	4.4140E-01	0.0024	1.5483E+01	0.0100
Surface 2 m from the WP bottom (See Figure 4)	WP bottom surface	1.2020E+01	0.0433	2.8720E-01	0.0073	1.2307E+01	0.0423
	Segment 13	6.5715E+00	0.0150	2.3237E-01	0.0030	6.8039E+00	0.0145

NOTE: [a] The segment outside Segment 10 and delimited by the radius of the cavity.
[b] The segment outside Segment 10 and delimited by the inner surface of the outer shell.

6.1.2 No Basket Assembly Inside the WP

Tables 17 through 22 present surface dose rates averaged over segments of the radial and axial surfaces of the 44-BWR WP (see Figures 4, 5, and 6 for segment locations). The WP basket assembly is neglected.

Table 17. Dose Rates on the Inner Surface of the Inner Shell: Bounding BWR SNF, No Basket

Axial Location	Gamma		Neutron		Total	
	Dose Rate (rem/h)	Relative Error	Dose Rate (rem/h)	Relative Error	Dose Rate (rem/h)	Relative Error
Segment 1	3.1480E+04	0.0096	1.4157E+01	0.0072	3.1494E+04	0.0096
Segment 2	5.0318E+04	0.0071	1.8160E+01	0.0064	5.0337E+04	0.0071
Segment 3	7.8947E+04	0.0047	2.8022E+01	0.0047	7.8975E+04	0.0047
Segment 4	9.6089E+04	0.0027	5.6818E+01	0.0024	9.6146E+04	0.0027
Segment 5	9.9138E+04	0.0027	7.2500E+01	0.0021	9.9211E+04	0.0027
Segment 6	9.8720E+04	0.0027	7.4863E+01	0.0020	9.8795E+04	0.0027
Segment 7	9.8566E+04	0.0027	7.2906E+01	0.0021	9.8639E+04	0.0027
Segment 8	9.0635E+04	0.0027	5.8620E+01	0.0024	9.0694E+04	0.0027
Segment 9	4.5210E+04	0.0080	3.4068E+01	0.0050	4.5244E+04	0.0080

Table 18. Dose Rates on the Inner Surface of the Outer Shell: Bounding BWR SNF, No Basket

Axial Location	Gamma		Neutron		Total	
	Dose Rate (rem/h)	Relative Error	Dose Rate (rem/h)	Relative Error	Dose Rate (rem/h)	Relative Error
Segment 1	2.6917E+03	0.0123	5.8050E+00	0.0070	2.6975E+03	0.0123
Segment 2	5.1091E+03	0.0092	7.8819E+00	0.0063	5.1170E+03	0.0092
Segment 3	8.0951E+03	0.0064	1.2804E+01	0.0047	8.1079E+03	0.0064
Segment 4	6.9446E+03	0.0036	2.7138E+01	0.0023	6.9717E+03	0.0036
Segment 5	6.7154E+03	0.0036	3.4289E+01	0.0020	6.7497E+03	0.0036
Segment 6	6.6901E+03	0.0036	3.5305E+01	0.0020	6.7254E+03	0.0036
Segment 7	6.7078E+03	0.0036	3.4519E+01	0.0020	6.7423E+03	0.0036
Segment 8	6.4404E+03	0.0037	2.7908E+01	0.0023	6.4683E+03	0.0037
Segment 9	3.1743E+03	0.0112	1.5587E+01	0.0050	3.1898E+03	0.0111

Table 19. Dose Rates on the WP Outer Radial Surface: Bounding BWR SNF, No Basket

Axial Location	Gamma		Neutron		Total	
	Dose Rate (rem/h)	Relative Error	Dose Rate (rem/h)	Relative Error	Dose Rate (rem/h)	Relative Error
Segment 1	9.1188E+02	0.0138	2.5740E+00	0.0069	9.1445E+02	0.0138
Segment 2	1.7887E+03	0.0104	3.5034E+00	0.0062	1.7922E+03	0.0104
Segment 3	2.7535E+03	0.0073	5.7800E+00	0.0045	2.7593E+03	0.0073
Segment 4	1.9644E+03	0.0043	1.2466E+01	0.0022	1.9768E+03	0.0043
Segment 5	1.8487E+03	0.0043	1.5665E+01	0.0019	1.8643E+03	0.0043
Segment 6	1.8426E+03	0.0043	1.6069E+01	0.0019	1.8587E+03	0.0043
Segment 7	1.8560E+03	0.0043	1.5754E+01	0.0019	1.8718E+03	0.0043
Segment 8	1.7902E+03	0.0044	1.2779E+01	0.0022	1.8030E+03	0.0044
Segment 9	9.5855E+02	0.0136	6.9907E+00	0.0048	9.6554E+02	0.0135

Table 20. Dose Rates on a Radial Surface 1 m from the WP: Bounding BWR SNF, No Basket

Axial Location	Gamma		Neutron		Total	
	Dose Rate (rem/h)	Relative Error	Dose Rate (rem/h)	Relative Error	Dose Rate (rem/h)	Relative Error
Segment 1	4.0494E+02	0.0076	1.4460E+00	0.0033	4.0638E+02	0.0076
Segment 2	5.0330E+02	0.0068	1.8384E+00	0.0029	5.0514E+02	0.0068
Segment 3	5.9852E+02	0.0057	2.3276E+00	0.0024	6.0084E+02	0.0057
Segment 4	6.7847E+02	0.0036	3.3207E+00	0.0015	6.8179E+02	0.0036
Segment 5	6.8580E+02	0.0032	4.3135E+00	0.0013	6.9011E+02	0.0032
Segment 6	6.7916E+02	0.0032	4.6179E+00	0.0012	6.8377E+02	0.0032
Segment 7	6.4836E+02	0.0033	4.3121E+00	0.0013	6.5267E+02	0.0033
Segment 8	5.1838E+02	0.0038	3.2747E+00	0.0015	5.2165E+02	0.0038
Segment 9	3.5083E+02	0.0074	2.3164E+00	0.0028	3.5315E+02	0.0074

Table 21. Dose Rates on a Radial Surface 2 m from the WP: Bounding BWR SNF, No Basket

Axial Location	Gamma		Neutron		Total	
	Dose Rate (rem/h)	Relative Error	Dose Rate (rem/h)	Relative Error	Dose Rate (rem/h)	Relative Error
Segment 1	2.4375E+02	0.0069	1.0850E+00	0.0028	2.4484E+02	0.0069
Segment 2	2.7508E+02	0.0064	1.2411E+00	0.0026	2.7632E+02	0.0064
Segment 3	3.0931E+02	0.0055	1.4233E+00	0.0022	3.1073E+02	0.0055
Segment 4	3.6049E+02	0.0035	1.7716E+00	0.0014	3.6226E+02	0.0035
Segment 5	3.9499E+02	0.0031	2.1569E+00	0.0013	3.9714E+02	0.0031
Segment 6	3.9212E+02	0.0031	2.2952E+00	0.0012	3.9441E+02	0.0031
Segment 7	3.5767E+02	0.0032	2.1450E+00	0.0013	3.5981E+02	0.0032
Segment 8	2.8238E+02	0.0036	1.7383E+00	0.0014	2.8412E+02	0.0036
Segment 9	2.1942E+02	0.0068	1.4073E+00	0.0027	2.2083E+02	0.0068

Table 22. Dose Rates on the Axial Surfaces: Bounding BWR SNF, No Basket

Surface	Segment	Gamma		Neutron		Total	
		Dose Rate (rem/h)	Relative Error	Dose Rate (rem/h)	Relative Error	Dose Rate (rem/h)	Relative Error
Top of the WP cavity (See Figure 5)	Segment 14	4.4593E+04	0.0171	1.7126E+01	0.0131	4.4610E+04	0.0171
	Segment 15	4.2697E+04	0.0158	1.6191E+01	0.0118	4.2713E+04	0.0158
	Segment 16	4.0012E+04	0.0139	1.5664E+01	0.0101	4.0027E+04	0.0139
	Segment 17	3.6576E+04	0.0129	1.4704E+01	0.0093	3.6591E+04	0.0129
	Segment 18	3.1287E+04	0.0127	1.4182E+01	0.0087	3.1301E+04	0.0127
	Segment 19	2.8504E+04	0.0111	1.3208E+01	0.0076	2.8517E+04	0.0111
Bottom of the outer upper lid (See Figure 6)	Segment 14	3.8447E+03	0.0251	8.8869E+00	0.0136	3.8536E+03	0.0250
	Segment 20	3.2891E+03	0.0154	7.9669E+00	0.0085	3.2971E+03	0.0154
	Segment 21	2.5854E+03	0.0135	6.9208E+00	0.0071	2.5923E+03	0.0135
	Segment 22	1.7198E+03	0.0147	4.8660E+00	0.0075	1.7247E+03	0.0147
Top of WP (See Figure 4)	Segment 10	1.0372E+03	0.0164	3.5115E+00	0 0086	1.0407E+03	0.0163
	Segment 11	5.9798E+02	0.0126	2.3737E+00	0.0061	6.0036E+02	0.0126
	Segment 12	3.0061E+02	0.0086	9.7627E-01	0.0035	3.0159E+02	0.0086
1 m from the WP top (See Figure 4)	WP top surface	2.6105E+02	0.0128	6.5999E-01	0.0062	2.6171E+02	0.0128
	Segment 13	8.6123E+01	0.0063	4.2886E-01	0.0025	8.6552E+01	0.0063
2 m from the WP top (See Figure 4)	WP top surface	1.1867E+02	0.0163	2.6820E-01	0.0082	1.1894E+02	0.0163
	Segment 13	5.2550E+01	0.0083	2.2945E-01	0.0031	5.2780E+01	0.0083
Bottom of WP cavity (See Figure 4)	Segment 10	6.5197E+04	0.0099	7.8194E+01	0.0044	6.5276E+04	0.0099
	# Segment 10[a]	3.5487E+04	0 0088	2.0883E+01	0.0047	3.5508E+04	0.0088
Bottom of the inner lower lid (See Figure 4)	Segment 10	7.0515E+02	0.0221	1.5824E+01	0.0057	7.2097E+02	0.0216
	# Segment 10[b]	4.4217E+02	0.0164	1.0178E+01	0.0044	4.5235E+02	0.0160
Bottom of WP (See Figures 4 and 6)	Segment 10	1.7263E+02	0.0288	6.6265E+00	0.0062	1.7925E+02	0.0277
	Segment 11	9.9993E+01	0.0221	3.9351E+00	0.0047	1.0393E+02	0.0213
	Segment 12	2.0292E+02	0.0081	1.8109E+00	0.0027	2.0473E+02	0.0080
Surface 1 m from the WP bottom (See Figure 4)	WP bottom surface	4.6774E+01	0.0224	1.1305E+00	0.0047	4.7905E+01	0.0219
	Segment 13	4.3144E+01	0.0060	6.5394E-01	0.0021	4.3798E+01	0.0059
Surface 2 m from the WP bottom (See Figure 4)	WP bottom surface	2.1485E+01	0.0292	4.4411E-01	0.0061	2.1929E+01	0.0286
	Segment 13	1.7065E+01	0.0085	3.4864E-01	0.0026	1.7413E+01	0.0083

NOTE: [a] The segment outside Segment 10 and delimited by the radius of the cavity.
[b] The segment outside Segment 10 and delimited by the inner surface of the outer shell.

6.2 HYPOTHETICAL BOUNDING SOURCE

Tables 23 through 28 present dose rates averaged over segments of the WP radial and axial surfaces for a hypothetical BWR SNF (see Figures 4, 5, and 6 for segment locations). The source terms have the following characteristics: 5.5-wt% initial ^{235}U, 75.0-GWd/MTU burnup, and a 5-year decay time for the active fuel, and 0.711-wt% initial ^{235}U, 75.0-GWd/MTU burnup, and a 5-year decay time for the hardware regions. These source terms generate conservative (higher) surface dose rates for the hardware regions. The WP contains the basket assembly inside.

Table 23. Dose Rates on the Inner Surface of the Inner Shell: Hypothetical BWR SNF

Axial Location	Gamma		Neutron		Total	
	Dose Rate (rem/h)	Relative Error	Dose Rate (rem/h)	Relative Error	Dose Rate (rem/h)	Relative Error
Segment 1	8.9552E+03	0.0171	5.6550E+00	0.0108	8.9609E+03	0.0171
Segment 2	2.1824E+04	0.0101	9.0073E+00	0.0089	2.1833E+04	0.0101
Segment 3	4.0864E+04	0.0062	1.7809E+01	0.0059	4.0882E+04	0.0062
Segment 4	3.5136E+04	0.0040	4.1334E+01	0.0028	3.5177E+04	0.0040
Segment 5	3.6224E+04	0.0039	5.1651E+01	0.0024	3.6276E+04	0.0039
Segment 6	3.4293E+04	0.0040	5.2248E+01	0.0024	3.4345E+04	0.0040
Segment 7	3.4270E+04	0.0040	5.1225E+01	0.0024	3.4322E+04	0.0040
Segment 8	3.4770E+04	0.0040	4.2353E+01	0.0027	3.4812E+04	0.0040
Segment 9	1.6180E+04	0.0119	2.1052E+01	0.0064	1.6201E+04	0.0119

Table 24. Dose Rates on the Inner Surface of the Outer Shell: Hypothetical BWR SNF

Axial Location	Gamma		Neutron		Total	
	Dose Rate (rem/h)	Relative Error	Dose Rate (rem/h)	Relative Error	Dose Rate (rem/h)	Relative Error
Segment 1	7.5592E+02	0.0225	2.5325E+00	0.0101	7.5845E+02	0.0224
Segment 2	2.2845E+03	0.0136	4.1106E+00	0.0082	2.2886E+03	0.0136
Segment 3	4.2884E+03	0.0088	8.5294E+00	0.0055	4.2969E+03	0.0088
Segment 4	2.5087E+03	0.0060	2.0281E+01	0.0025	2.5290E+03	0.0060
Segment 5	2.4464E+03	0.0059	2.5212E+01	0.0023	2.4716E+03	0.0058
Segment 6	2.3226E+03	0.0061	2.5409E+01	0.0022	2.3480E+03	0.0060
Segment 7	2.3569E+03	0.0060	2.5092E+01	0.0023	2.3820E+03	0.0059
Segment 8	2.4219E+03	0.0060	2.0747E+01	0.0025	2.4426E+03	0.0059
Segment 9	1.3255E+03	0.0180	1.0088E+01	0.0060	1.3356E+03	0.0179

Table 25. Dose Rates on the WP Outer Radial Surface: Hypothetical BWR SNF

Axial Location	Gamma		Neutron		Total	
	Dose Rate (rem/h)	Relative Error	Dose Rate (rem/h)	Relative Error	Dose Rate (rem/h)	Relative Error
Segment 1	2.5209E+02	0.0253	1.0552E+00	0.0104	2.5315E+02	0.0252
Segment 2	7.8426E+02	0.0153	1.7524E+00	0.0082	7.8602E+02	0.0153
Segment 3	1.4589E+03	0.0101	3.7641E+00	0.0054	1.4627E+03	0.0101
Segment 4	7.0856E+02	0.0072	9.0982E+00	0.0025	7.1765E+02	0.0071
Segment 5	6.6747E+02	0.0072	1.1251E+01	0.0022	6.7872E+02	0.0071
Segment 6	6.3113E+02	0.0074	1.1320E+01	0.0022	6.4245E+02	0.0073
Segment 7	6.4486E+02	0.0073	1.1173E+01	0.0022	6.5604E+02	0.0072
Segment 8	6.6068E+02	0.0073	9.3195E+00	0.0025	6.7000E+02	0.0072
Segment 9	4.1208E+02	0.0214	4.4262E+00	0.0059	4.1651E+02	0.0212

Table 26. Dose Rates on a Radial Surface 1 m from the WP: Hypothetical BWR SNF

Axial Location	Gamma		Neutron		Total	
	Dose Rate (rem/h)	Relative Error	Dose Rate (rem/h)	Relative Error	Dose Rate (rem/h)	Relative Error
Segment 1	1.6875E+02	0.0119	9.5257E-01	0.0038	1.6970E+02	0.0118
Segment 2	2.1688E+02	0.0106	1.2358E+00	0.0034	2.1812E+02	0.0105
Segment 3	2.6114E+02	0.0090	1.6124E+00	0.0027	2.6275E+02	0.0089
Segment 4	2.7170E+02	0.0058	2.3553E+00	0.0017	2.7405E+02	0.0058
Segment 5	2.4934E+02	0.0054	3.0799E+00	0.0015	2.5242E+02	0.0053
Segment 6	2.3958E+02	0.0054	3.2863E+00	0.0014	2.4287E+02	0.0053
Segment 7	2.3350E+02	0.0056	3.0768E+00	0.0015	2.3657E+02	0.0055
Segment 8	1.9158E+02	0.0064	2.3268E+00	0.0017	1.9390E+02	0.0063
Segment 9	1.3044E+02	0.0124	1.6262E+00	0.0032	1.3206E+02	0.0122

Table 27. Dose Rates on a Radial Surface 2 m from the WP: Hypothetical BWR SNF

Axial Location	Gamma		Neutron		Total	
	Dose Rate (rem/h)	Relative Error	Dose Rate (rem/h)	Relative Error	Dose Rate (rem/h)	Relative Error
Segment 1	9.7198E+01	0.0109	7.4946E-01	0.0032	9.7947E+01	0.0108
Segment 2	1.1260E+02	0.0108	8.5887E-01	0.0030	1.1346E+02	0.0107
Segment 3	1.2539E+02	0.0088	9.9650E-01	0.0025	1.2639E+02	0.0087
Segment 4	1.4231E+02	0.0057	1.2520E+00	0.0016	1.4356E+02	0.0057
Segment 5	1.4926E+02	0.0052	1.5344E+00	0.0014	1.5079E+02	0.0051
Segment 6	1.4354E+02	0.0051	1.6334E+00	0.0014	1.4517E+02	0.0050
Segment 7	1.3058E+02	0.0053	1.5300E+00	0.0014	1.3211E+02	0.0052
Segment 8	1.0430E+02	0.0061	1.2345E+00	0.0016	1.0553E+02	0.0060
Segment 9	8.0782E+01	0.0117	9.9713E-01	0.0030	8.1779E+01	0.0116

Table 28. Dose Rates on the Axial Surfaces: Hypothetical BWR SNF

Surface	Segment	Gamma		Neutron		Total	
		Dose Rate (rem/h)	Relative Error	Dose Rate (rem/h)	Relative Error	Dose Rate (rem/h)	Relative Error
Top of the WP cavity (See Figure 5)	Segment 14	2.0066E+04	0.0270	7.9158E+00	0.0205	2.0074E+04	0.0270
	Segment 15	1.9074E+04	0.0244	7.6218E+00	0.0181	1.9081E+04	0.0244
	Segment 16	1.7185E+04	0.0212	7.0729E+00	0.0159	1.7192E+04	0.0212
	Segment 17	1.5577E+04	0.0199	6.6457E+00	0.0143	1.5584E+04	0.0199
	Segment 18	1.2730E+04	0.0202	6.0892E+00	0.0137	1.2736E+04	0.0202
	Segment 19	7.6269E+03	0.0224	5.2235E+00	0.0127	7.6322E+03	0.0224
Bottom of the outer upper lid (See Figure 6)	Segment 14	1.6906E+03	0.0377	3.7255E+00	0.0191	1.6944E+03	0.0376
	Segment 20	1.5320E+03	0.0230	3.4376E+00	0.0123	1.5354E+03	0.0229
	Segment 21	1.1588E+03	0.0208	2.9058E+00	0.0104	1.1617E+03	0.0207
	Segment 22	5.4223E+02	0.0264	1.9195E+00	0.0113	5.4415E+02	0.0263
Top of WP (See Figure 4)	Segment 10	4.9415E+02	0.0244	1.4042E+00	0.0126	4.9555E+02	0.0243
	Segment 11	2.4252E+02	0.0204	8.9147E-01	0.0094	2.4341E+02	0.0203
	Segment 12	9.8722E+01	0.0132	5.4811E-01	0.0039	9.9270E+01	0.0131
1 m from the WP top (See Figure 4)	WP top surface	1.3170E+02	0.0197	2.5339E-01	0.0095	1.3195E+02	0.0197
	Segment 13	3.1543E+01	0.0099	2.4668E-01	0.0028	3.1789E+01	0.0098
2 m from the WP top (See Figure 4)	WP top surface	6.4991E+01	0.0247	1.0180E-01	0.0125	6.5093E+01	0.0247
	Segment 13	2.0729E+01	0.0132	1.2343E-01	0.0036	2.0853E+01	0.0131
Bottom of WP cavity (See Figure 4)	Segment 10	3.7643E+04	0.0148	4.7140E+01	0.0059	3.7690E+04	0.0148
	# Segment 10[a]	2.1402E+04	0.0130	1.5904E+01	0.0060	2.1418E+04	0.0130
Bottom of the inner lower lid (See Figure 4)	Segment 10	5.2189E+02	0.0277	1.1023E+01	0.0067	5.3292E+02	0.0271
	# Segment 10[b]	3.1458E+02	0.0219	6.5085E+00	0.0054	3.2109E+02	0.0215
Bottom of WP (See Figures 4 and 6)	Segment 10	1.4331E+02	0.0342	4.4811E+00	0.0073	1.4779E+02	0.0332
	Segment 11	7.7209E+01	0.0269	2.4348E+00	0.0058	7.9644E+01	0.0261
	Segment 12	7.3153E+01	0.0141	1.2149E+00	0.0031	7.4368E+01	0.0139
Surface 1 m from the WP bottom (See Figure 4)	WP bottom surface	3.9534E+01	0.0274	7.3213E-01	0.0057	4.0266E+01	0.0269
	Segment 13	1.7266E+01	0.0100	4.4140E-01	0.0024	1.7708E+01	0.0098
Surface 2 m from the WP bottom (See Figure 4)	WP bottom surface	1.9128E+01	0.0350	2.8720E-01	0.0073	1.9415E+01	0.0345
	Segment 13	8.5494E+00	0.0144	2.3237E-01	0.0030	8.7817E+00	0.0140

NOTE: [a] The segment outside Segment 10 and delimited by the radius of the cavity.
[b] The segment outside Segment 10 and delimited by the inner surface of the outer shell.

6.3 AVERAGE SOURCE

Tables 29 through 34 present surface dose rates averaged over segments of radial and axial surfaces of the WP containing SNF with the following characteristics: 3.5-wt% initial ^{235}U, 40.0-GWd/MTU burnup, and a 22-year decay time (see Figures 4, 5, and 6 for segment locations). The WP contains the basket assembly inside.

Table 29. Dose Rates on the Inner Surface of the Inner Shell: Average BWR SNF

Axial Location	Gamma		Neutron		Total	
	Dose Rate (rem/h)	Relative Error	Dose Rate (rem/h)	Relative Error	Dose Rate (rem/h)	Relative Error
Segment 1	5.0823E+02	0.0353	4.7510E-01	0.0114	5.0870E+02	0.0353
Segment 2	1.2962E+03	0.0210	7.4224E-01	0.0093	1.2969E+03	0.0210
Segment 3	3.2470E+03	0.0108	1.5080E+00	0.0062	3.2485E+03	0.0108
Segment 4	6.6001E+03	0.0043	3.4376E+00	0.0028	6.6035E+03	0.0043
Segment 5	7.3370E+03	0.0041	4.2597E+00	0.0025	7.3412E+03	0.0041
Segment 6	6.9245E+03	0.0042	4.2701E+00	0.0025	6.9288E+03	0.0042
Segment 7	6.9495E+03	0.0043	4.2086E+00	0.0025	6.9537E+03	0.0043
Segment 8	6.9409E+03	0.0042	3.5299E+00	0.0028	6.9444E+03	0.0042
Segment 9	2.3418E+03	0.0150	1.7752E+00	0.0067	2.3436E+03	0.0150

Table 30. Dose Rates on the Inner Surface of the Outer Shell: Average BWR SNF

Axial Location	Gamma		Neutron		Total	
	Dose Rate (rem/h)	Relative Error	Dose Rate (rem/h)	Relative Error	Dose Rate (rem/h)	Relative Error
Segment 1	4.1161E+01	0.0463	2.1137E-01	0.0106	4.1373E+01	0.0461
Segment 2	1.2361E+02	0.0284	3.4273E-01	0.0085	1.2395E+02	0.0283
Segment 3	2.7836E+02	0.0159	7.1821E-01	0.0057	2.7908E+02	0.0159
Segment 4	4.3300E+02	0.0064	1.6931E+00	0.0026	4.3470E+02	0.0064
Segment 5	4.6499E+02	0.0061	2.0708E+00	0.0023	4.6706E+02	0.0061
Segment 6	4.3435E+02	0.0063	2.0684E+00	0.0023	4.3642E+02	0.0063
Segment 7	4.4377E+02	0.0063	2.0510E+00	0.0023	4.4582E+02	0.0063
Segment 8	4.4811E+02	0.0063	1.7234E+00	0.0026	4.4983E+02	0.0063
Segment 9	1.4630E+02	0.0229	8.4019E-01	0.0062	1.4714E+02	0.0228

Table 31. Dose Rates on the WP Outer Radial Surface: Average BWR SNF

Axial Location	Gamma		Neutron		Total	
	Dose Rate (rem/h)	Relative Error	Dose Rate (rem/h)	Relative Error	Dose Rate (rem/h)	Relative Error
Segment 1	1.3499E+01	0.0534	8.8164E-02	0.0109	1.3587E+01	0.0531
Segment 2	4.2313E+01	0.0318	1.4704E-01	0.0086	4.2460E+01	0.0317
Segment 3	8.7916E+01	0.0189	3.1562E-01	0.0056	8.8231E+01	0.0188
Segment 4	1.1293E+02	0.0077	7.5841E-01	0.0026	1.1369E+02	0.0076
Segment 5	1.1869E+02	0.0073	9.2539E-01	0.0023	1.1961E+02	0.0072
Segment 6	1.1156E+02	0.0075	9.2270E-01	0.0023	1.1248E+02	0.0074
Segment 7	1.1485E+02	0.0075	9.1358E-01	0.0023	1.1576E+02	0.0074
Segment 8	1.1507E+02	0.0075	7.7282E-01	0.0025	1.1584E+02	0.0074
Segment 9	3.9840E+01	0.0287	3.7196E-01	0.0062	4.0212E+01	0.0284

Table 32. Dose Rates on a Radial Surface 1 m from the WP: Average BWR SNF

Axial Location	Gamma		Neutron		Total	
	Dose Rate (rem/h)	Relative Error	Dose Rate (rem/h)	Relative Error	Dose Rate (rem/h)	Relative Error
Segment 1	1.3840E+01	0.0175	7.9343E-02	0.0040	1.3919E+01	0.0174
Segment 2	1.9044E+01	0.0147	1.0255E-01	0.0036	1.9147E+01	0.0146
Segment 3	2.6024E+01	0.0115	1.3332E-01	0.0028	2.6157E+01	0.0114
Segment 4	3.6090E+01	0.0066	1.9469E-01	0.0018	3.6285E+01	0.0066
Segment 5	4.1181E+01	0.0056	2.5321E-01	0.0015	4.1435E+01	0.0056
Segment 6	4.1772E+01	0.0055	2.6890E-01	0.0014	4.2041E+01	0.0055
Segment 7	4.0696E+01	0.0057	2.5226E-01	0.0015	4.0948E+01	0.0057
Segment 8	3.2340E+01	0.0066	1.9222E-01	0.0018	3.2533E+01	0.0066
Segment 9	2.0696E+01	0.0129	1.3412E-01	0.0033	2.0830E+01	0.0128

Table 33. Dose Rates on a Radial Surface 2 m from the WP: Average BWR SNF

Axial Location	Gamma		Neutron		Total	
	Dose Rate (rem/h)	Relative Error	Dose Rate (rem/h)	Relative Error	Dose Rate (rem/h)	Relative Error
Segment 1	1.0450E+01	0.0136	6.1603E-02	0.0034	1.0512E+01	0.0135
Segment 2	1.2562E+01	0.0129	7.1040E-02	0.0032	1.2633E+01	0.0128
Segment 3	1.5102E+01	0.0103	8.1805E-02	0.0026	1.5184E+01	0.0102
Segment 4	1.9221E+01	0.0064	1.0323E-01	0.0017	1.9324E+01	0.0064
Segment 5	2.3158E+01	0.0056	1.2625E-01	0.0015	2.3284E+01	0.0056
Segment 6	2.3704E+01	0.0053	1.3427E-01	0.0014	2.3838E+01	0.0053
Segment 7	2.2355E+01	0.0056	1.2552E-01	0.0015	2.2480E+01	0.0056
Segment 8	1.7467E+01	0.0063	1.0177E-01	0.0017	1.7568E+01	0.0063
Segment 9	1.3211E+01	0.0118	8.2337E-02	0.0032	1.3293E+01	0.0117

Table 34. Dose Rates on the Axial Surfaces: Average BWR SNF

Surface	Segment	Gamma		Neutron		Total	
		Dose Rate (rem/h)	Relative Error	Dose Rate (rem/h)	Relative Error	Dose Rate (rem/h)	Relative Error
Top of the WP cavity (See Figure 5)	Segment 14	1.0983E+03	0.0528	6.7117E-01	0.0212	1.0990E+03	0.0528
	Segment 15	9.9155E+02	0.0504	6.2475E-01	0.0185	9.9218E+02	0.0504
	Segment 16	9.2448E+02	0.0454	5.7584E-01	0.0171	9.2506E+02	0.0454
	Segment 17	8.0901E+02	0.0415	5.5821E-01	0.0153	8.0956E+02	0.0415
	Segment 18	6.5994E+02	0.0416	5.0917E-01	0.0148	6.6045E+02	0.0416
	Segment 19	4.0055E+02	0.0445	4.2946E-01	0.0131	4.0098E+02	0.0445
Bottom of the outer upper lid (See Figure 6)	Segment 14	8.9967E+01	0.0742	3.1328E-01	0.0205	9.0280E+01	0.0739
	Segment 20	8.0749E+01	0.0493	2.8358E-01	0.0129	8.1033E+01	0.0491
	Segment 21	5.7881E+01	0.0441	2.3734E-01	0.0109	5.8118E+01	0.0439
	Segment 22	2.8011E+01	0.0552	1.5860E-01	0.0119	2.8170E+01	0.0549
Top of WP (See Figure 4)	Segment 10	2.5801E+01	0.0519	1.1609E-01	0.0131	2.5917E+01	0.0517
	Segment 11	1.2286E+01	0.0434	7.3945E-02	0.0099	1.2360E+01	0.0431
	Segment 12	6.5810E+00	0.0222	4.5690E-02	0.0041	6.6267E+00	0.0220
1 m from the WP top (See Figure 4)	WP top surface	7.1366E+00	0.0414	2.1091E-02	0.0099	7.1577E+00	0.0413
	Segment 13	2.3134E+00	0.0157	2.0459E-02	0.0029	2.3339E+00	0.0156
2 m from the WP top (See Figure 4)	WP top surface	3.5143E+00	0.0510	8.5238E-03	0.0130	3.5228E+00	0.0509
	Segment 13	1.3111E+00	0.0232	1.0226E-02	0.0038	1.3213E+00	0.0230
Bottom of WP cavity (See Figure 4)	Segment 10	2.9655E+03	0.0219	3.8913E+00	0.0061	2.9693E+03	0.0219
	# Segment 10[a]	1.7264E+03	0.0202	1.3325E+00	0.0062	1.7278E+03	0.0202
Bottom of the inner lower lid (See Figure 4)	Segment 10	3.7348E+01	0.0473	9.0646E-01	0.0071	3.8254E+01	0.0462
	# Segment 10[b]	2.1552E+01	0.0368	5.4788E-01	0.0056	2.2100E+01	0.0359
Bottom of WP (See Figures 4 and 6)	Segment 10	9.4253E+00	0.0636	3.6258E-01	0.0076	9.7879E+00	0.0612
	Segment 11	5.0067E+00	0.0490	2.0311E-01	0.0060	5.2098E+00	0.0471
	Segment 12	1.0192E+01	0.0139	1.0105E-01	0.0032	1.0293E+01	0.0138
Surface 1 m from the WP bottom (See Figure 4)	WP bottom surface	2.4571E+00	0.0503	6.0066E-02	0.0059	2.5171E+00	0.0491
	Segment 13	2.3507E+00	0.0108	3.6579E-02	0.0025	2.3873E+00	0.0106
Surface 2 m from the WP bottom (See Figure 4)	WP bottom surface	1.2209E+00	0.0667	2.3623E-02	0.0077	1.2445E+00	0.0654
	Segment 13	9.2097E-01	0.0171	1.9282E-02	0.0031	9.4025E-01	0.0167

NOTE: [a] The segment outside Segment 10 and delimited by the radius of the cavity.
[b] The segment outside Segment 10 and delimited by the inner surface of the outer shell.

7. REFERENCES

7.1 DOCUMENTS CITED

Bowman, S.M.; Hermann, O.W.; and Brady, M.C. 1995. *Sequoyah Unit 2 Cycle 3.* Volume 2 of *Scale-4 Analysis of Pressurized Water Reactor Critical Configurations.* ORNL/TM-12294/V2. Oak Ridge, Tennessee: Oak Ridge National Laboratory. TIC: 244397.

Briesmeister, J.F., ed. 1997. *MCNP-A General Monte Carlo N-Particle Transport Code.* LA-12625-M, Version 4B. Los Alamos, New Mexico: Los Alamos National Laboratory. ACC: MOL.19980624.0328.

CRWMS M&O 1998a. *Software Code: MCNP.* 4B2LV. HP. 30033 V4B2LV.

CRWMS M&O 1998b. *Calculation of the Effect of Source Geometry on the 21-PWR WP Dose Rates.* BBAC00000-01717-0210-00004 REV 00. Las Vegas, Nevada: CRWMS M&O. ACC: MOL.19990222.0059.

CRWMS M&O 1999. *BWR Source Term Generation and Evaluation.* BBAC00000-01717-0210-00006 REV 01. Las Vegas, Nevada: CRWMS M&O. ACC: MOL.20000113.0334.

CRWMS M&O 2000a. *Technical Work Plan for: Waste Package Design Description for SR.* TWP-EBS-MD-000003 REV 00. Las Vegas, Nevada: CRWMS M&O. ACC: MOL.20001107.0366.

CRWMS M&O 2000b. *Waste Packages and Source Terms for the Commercial 1999 Design Basis Waste Streams.* CAL-MGR-MD-000001 REV 00. Las Vegas, Nevada: CRWMS M&O. ACC: MOL.20000214.0479.

Harmon, C.D., II; Busch, R.D.; Briesmeister, J.F.; and Forster, R.A. 1994. *Criticality Calculations with MCNP™: A Primer.* LA-12827-M. Los Alamos, New Mexico: Los Alamos National Laboratory. TIC: 234014.

Kugler, A. 1996. *Bohler Neutronit A976 Sheet and Plate for Nuclear Engineering.* Murzzuschlag, Austria: Bohler Bleche GmbH. TIC: 240558.

Parrington, J.R.; Knox, H.D.; Breneman, S.L.; Baum, E.M.; and Feiner, F. 1996. *Nuclides and Isotopes, Chart of the Nuclides.* 15th Edition. San Jose, California: General Electric Company and KAPL, Inc. TIC: 233705.

7.2 CODES, STANDARDS, REGULATIONS, AND PROCEDURES

AP-3.12Q, Rev. 0, ICN 4. *Calculations*. Washington D.C.: U.S. Department of Energy, Office of Civilian Radioactive Waste Management. ACC: MOL.20010404.0008.

ASME (American Society of Mechanical Engineers) 1998. *1998 ASME Boiler and Pressure Vessel Code*. 1998 Edition with 1999 and 2000 Addenda. New York, New York: American Society of Mechanical Engineers. TIC: 247429.

ASTM A 887-89. 1992. *Standard Specification for Borated Stainless Steel Plate, Sheet, and Strip for Nuclear Application*. Philadelphia, Pennsylvania: ASTM. TIC: 245311.

ASTM G 1-90 (Reapproved 1999). 1990. *Standard Practice for Preparing, Cleaning, and Evaluating Corrosion Test Specimens*. West Conshohocken, Pennsylvania: American Society for Testing and Materials. TIC: 238771.

8. ATTACHMENTS

The attachments of this calculation are listed in Table 35. Electronic output files are provided on a compact disk, and are listed in Table 36. Each output file is identified by its name, size (in bytes), and the date and time. The input files used are echoed in the output files. It should be noted that for files transferred from the HP to the personal computer, the date and time will reflect the time of transfer. The actual date and time of run completion can be found in the file.

Table 35. List of Attachments

Description	Attachment Number	No. of Pages
SK-0219 REV 01, page 24 21-PWR Waste Package Concept for License Application	I	1
SK-0192 REV 00, page 1 44-BWR Waste Package Configuration for Site Recommendation	II	1
Atomic density calculation for the homogenized assembly regions	III	3
Total intensity and source region fractions	IV	2
MCNP electronic output files (compact disk)	V	N/A

Table 36. File Attributes for the Contents of Electronic Media

File Name	Calculation	File Size (bytes)	File Date	File Time
abg.io	Gamma dose rates for the WP containing the average BWR SNF source	322,111	01/19/2001	4:10 p.m.
abn.io	Neutron dose rates for the WP containing the average BWR SNF source	270,372	01/22/2001	8:37 a.m.
bbg.io	Gamma dose rates for the WP containing bounding BWR SNF source for the active fuel region	297,433	01/22/2001	8:38 a.m.
bbn.io	Neutron dose rates for the WP containing bounding BWR SNF source for the active fuel region	276,019	01/22/2001	8:38 a.m.
b2bg.io	Gamma dose rates for the WP containing the bounding BWR SNF source for the hardware regions	293,512	01/22/2001	8:37 a.m.
bg.io	Gamma dose rates for the WP containing bounding BWR SNF source (basket assembly neglected)	166,678	01/22/2001	8:38 a.m.
bn.io	Neutron dose rates for the WP containing bounding BWR SNF source (basket assembly neglected)	153,963	01/22/2001	8:38 a.m.

NOTE: The MCNP output files listed in the table are text files.

Illegibility does not impact the technical meaning or content of the record.

GR 05130/01

COMPONENT LIST

ITEM NUMBER	ASSEMBLY	SUBASSEMBLY	SUBASSEMBLY	SUBASSEMBLY	COMPONENT NAME	MATERIAL	THICKNESS	QUANTITY	QTY REQD
-1	21-PWR WASTE PACKAGE ASSEMBLY	-	-	-	-	-	-	25333	1
		-	-	-	-	-	-	△1 25357	△1 1
-2	-	OUTER SHELL ASSEMBLY	-	-	-	-	-	5728	1
1	-	-	-	-	OUTER SHELL	SB-575 N06022	20	4194	1
2	-	-	-	-	UPPER TRUNNION COLLAR SLEEVE	SB-575 N06022	40	446	1
3	-	-	-	-	LOWER TRUNNION COLLAR SLEEVE	SB-575 N06022	40	436	1
4	-	-	-	-	SHELL INTERFACE RING	SA-240 S31600	30	86	1
5	-	-	-	-	INNER SHELL SUPPORT RING	SB-575 N06022	40	47	1
6	-	-	-	-	OUTER SHELL FLAT BOTTOM LID	SB-575 N06022	25.4	423	1
-3	-	EXTENDED OUTER SHELL LID ASSEMBLY	-	-	-	-	-	713	1
7	-	-	-	-	EXTENDED OUTER SHELL LID	SB-575 N06022	25	133	1
8	-	-	-	-	EXTENDED OUTER SHELL LID BASE	SB-575 N06022	25.4	377	1
9	-	-	-	-	LARGE REINFORCEMENT RING	SB-575 N06022	50	98	1
10	-	-	-	-	SMALL REINFORCEMENT RING - TOP	SB-575 N06022	25	25	1
11	-	-	-	-	SMALL REINFORCEMENT RING - BOTTOM	SB-575 N06022	25	23	1
12	-	-	-	-	OUTER SHELL LID LIFTING FEATURE PLATE-1	SB-575 N06022	6.35	0.96	1
13	-	-	-	-	OUTER SHELL LID LIFTING FEATURE PLATE-2	SB-575 N06022	6.35	1.2	1
-4	-	OUTER SHELL FLAT CLOSURE LID ASSEMBLY	-	-	-	-	-	156	1
14	-	-	-	-	OUTER SHELL FLAT CLOSURE LID	SB-575 N06022	9.525	154	1
12	-	-	-	-	OUTER SHELL LID LIFTING FEATURE PLATE-1	SB-575 N06022	6.35	0.96	1
13	-	-	-	-	OUTER SHELL LID LIFTING FEATURE PLATE-2	SB-575 N06022	6.35	1.2	1
-5	-	INNER SHELL ASSEMBLY	-	-	-	-	-	18725	1
	-		-	-	-	-	-	△1 18748	△1 1
15	-	-	-	-	INNER SHELL	SA-240 S31600	50	8554	1
16	-	-	-	-	INNER SHELL BOTTOM LID	SA-240 S31600	88.9	1274	1
17	-	-	-	-	FUEL BASKET TUBE	SA-516 K02700	5	164	21
18	-	-	-	-	SHEAR RING SECTION-1	SA-240 S31600	22.225	8.2	2
19	-	-	-	-	SHEAR RING SECTION-2	SA-240 S31600	22.225	7.8	1
-6	-	-	INNER SHELL TOP LID ASSEMBLY	-	-	-	-	875	1
20	-	-	-	-	INNER SHELL TOP LID	SA-240 S31600	50.8	672	1
21	-	-	-	-	INNER LID LIFTING FEATURE PLATE-1	SA-240 S31600	6.35	0.89	1
22	-	-	-	-	INNER LID LIFTING FEATURE PLATE-2	SA-240 S31600	6.35	1.1	1
23	-	-	-	-	EVACUATION-BACKFILL QUICK RELEASE VALVE	SA-240 S31600	12.7	0.06	1
24	-	-	-	-	EVACUATION-BACKFILL PORT COVER PLATE	SA-240 S31600	6.35	0.02	1
-7	-	-	END SIDEGUIDE ASSEMBLY	-	-	-	-	28	32
25	-	-	-	-	BASKET A-SIDEGUIDE	SA-516 K02700	10	27	32
26	-	-	-	-	BASKET A-STIFFENER	SA-516 K02700	10	0.72	64
-8	-	-	SIDEGUIDE ASSEMBLY	-	-	-	-	38	16
27	-	-	-	-	BASKET B-SIDEGUIDE	SA-516 K02700	10	36	16
28	-	-	-	-	BASKET B-STIFFENER	SA-516 K02700	10	1.5	32
-9	-	-	CORNERGUIDE ASSEMBLY	-	-	-	-	47	16
29	-	-	-	-	BASKET C-STIFFENER	SA-516 K02700	10	2.3	32
30	-	-	-	-	BASKET CORNERGUIDE	SA-516 K02700	10	42	16
-10	-	-	FUEL PLATE ASSEMBLY	-	-	-	-	599	4
	-	-		-	-	-	-	△1 605	△1 4
31	-	-	-	-	FUEL BASKET C-PLATE	NEUTRONIT A 978	7	44	16
	-	-	-	-		△1 SA-516 K02700	△1 7	△1 45	△1 16
-11	-	-	-	FUEL PLATE A-D ASSEMBLY	-	-	-	106	8
	-	-	-		-	-	-	△1 107	△1 8
32	-	-	-	-	FUEL BASKET A-PLATE	NEUTRONIT A 978	7	85	8
	-	-	-	-		△1 SA-516 K02700	△1 7	△1 86	△1 8
33	-	-	-	-	FUEL BASKET D-PLATE	SB-209 A96061 T4	5	21	8
-12	-	-	-	FUEL PLATE B-E ASSEMBLY	-	-	-	106	8
	-	-	-		-	-	-	△1 107	△1 8
34	-	-	-	-	FUEL BASKET B-PLATE	NEUTRONIT A 978	7	85	8
	-	-	-	-		△1 SA-516 K02700	△1 7	△1 86	△1 8
35	-	-	-	-	FUEL BASKET E-PLATE	SB-209 A96061 T4	5	21	8
-	-	-	-	-	-	-	-	-	-
-	-	-	-	-	TOTAL CARBON STEEL WELDS	SFA-5.18 K10726	-	34	-
-	-	-	-	-	TOTAL ALLOY 22 WELDS	SFA-5.14 N06022	-	182	-
-	-	-	-	-	TOTAL 316 WELDS	SFA-5.9 S31680	-	41	-
-	-	-	-	-	-	-	-	-	-
-	-	-	PWR FUEL ASSEMBLY	-	-	-	-	△1 773.4	21
-	21-PWR WP ASSEMBLY WITH SNF	-	-	-	-	-	-	41574	1
		-	-	-	-	-	-	△1 41598	△1 1

REVISION HISTORY

ZONE	REV	DESCRIPTION	DATE	APPROVED
D3-1	-	CONTINUED FROM SHEET 1	02/22/01	SMB
A4-8	01	34.9 WAS 37	02/22/01	SMB
A6-6	01	ADDED DETAIL CC CALLOUT	02/22/01	SMB
C6-7	01	ADDED SECTION W	02/22/01	SMB
D7-7	01	ADDED SECTION V	02/22/01	SMB
-	01	ADDED ITEM 10 IN ZONES C5-7, D7-13, C8-24, AND A4-22	02/22/01	SMB
-	01	ADDED ITEM 9 IN ZONES B4-7, C8-24, AND A2-22	02/22/01	SMB
C3-7	01	INNER SHELL ASSEMBLY PERSPECTIVE VIEW MODIFIED TO SHOW EXPLODED FUEL BASKET TUBES AND PLATE ASSEMBLY	02/22/01	SMB
-	01	ITEM 15 WAS ITEM 14 IN ZONES C2-7, C5-13, D3-13, D8-19, AND C8-24	02/22/01	SMB
-	01	ITEM 16 WAS ITEM 15 IN ZONES D1-7, C3-13, C5-19, AND C8-24	02/22/01	SMB
-	01	ITEM 17 WAS ITEM 16 IN ZONES C4-7, A2-19, AND C8-24	02/22/01	SMB
B8-7	01	4702 WAS 4712	02/22/01	SMB
-	01	88.9 WAS 50 IN ZONES A8-7, C5-19, AND C4-24	02/22/01	SMB
-	01	ITEM 20 WAS ITEM 17 IN ZONES C3-8, C1-12, B8-13, A4-12, D8-20, AND C8-24	02/22/01	SMB
A4-8	01	ADDED DETAIL DD TO SHOW CALLOUTS OF ITEM 21 AND ITEM 22	02/22/01	SMB
B7-8	01	ADDED DETAIL DD CALLOUT	02/22/01	SMB
A3-8	01	ADDED ITEM 20 CALLOUT	02/22/01	SMB
C2-12	01	ADDED ITEM 22	02/22/01	SMB
-	01	ITEM 23 WAS ITEM 19 IN ZONES A2-8, A4-12, A6-20, AND B8-24	02/22/01	SMB
-	01	ITEM 24 WAS ITEM 20 IN ZONES B2-8, B5-12, B2-21, AND B8-24	02/22/01	SMB
A8-8	01	76.2 WAS 77	02/22/01	SMB
D5-8	01	1454 WAS 1430	02/22/01	SMB
D8-9	01	ADDED SECTION R	02/22/01	SMB
-	01	DELETED 10 TYP IN ZONES B5-9, C5-9, AND D5-9	02/22/01	SMB
-	01	ADDED 20 TYP IN ZONES B5-9, C5-9, AND D5-9	02/22/01	SMB
-	01	ITEM 26 WAS ITEM 22 IN ZONES D7-8, A7-21, AND B8-24	02/22/01	SMB
-	01	ITEM 25 WAS ITEM 21 IN ZONES D6-9, C7-21, AND B8-24	02/22/01	SMB
-	01	ITEM 28 WAS ITEM 24 IN ZONES C7-9, B1-21, AND B8-24	02/22/01	SMB
-	01	ITEM 27 WAS ITEM 23 IN ZONES B7-21, C6-9, AND B8-24	02/22/01	SMB
C8-9	01	ADDED SECTION T	02/22/01	SMB
-	01	ITEM 30 WAS ITEM 26 IN ZONES B8-9, D3-22, AND B8-24	02/22/01	SMB
-	01	ITEM 29 WAS ITEM 25 IN ZONES D6-22, B7-9, AND B8-24	02/22/01	SMB
B8-9	01	ADDED SECTION U	02/22/01	SMB
-	01	ITEM 31 WAS ITEM 27 IN ZONES C4-10, A8-22, AND B8-24	02/22/01	SMB
-	01	ITEM 33 WAS ITEM 29 IN ZONES C4-11, C2-23, AND B8-24	02/22/01	SMB
-	01	ITEM 32 WAS ITEM 28 IN ZONES D2-11, C8-23, AND B8-24	02/22/01	SMB
-	01	ITEM 35 WAS ITEM 31 IN ZONES B4-11, B1-23, AND A8-24	02/22/01	SMB
-	01	ITEM 34 WAS ITEM 30 IN ZONES B2-11, A6-23, AND A8-24	02/22/01	SMB
-	01	6.35 WAS 12.7 IN ZONES D4-12 AND D2-12	02/22/01	SMB
D3-12	01	ADDED W9 IN 2 PLACES	02/22/01	SMB
D8-25	01	ADDED WELD 9	02/22/01	SMB
D3-12	01	ADDED W7 IN 2 PLACES	02/22/01	SMB
B4-12	01	ADDED W10	02/22/01	SMB
-	01	ADDED ITEM 13 CALLOUT IN ZONES D2-12 AND D5-12	02/22/01	SMB
C2-12	01	ITEM 21 WAS ITEM 18	02/22/01	SMB
C8-25	01	ADDED WELD 19	02/22/01	SMB
C4-12	01	W18 WAS W14	02/22/01	SMB
C8-25	01	WELD 18 WAS WELD 14	02/22/01	SMB
C4-12	01	6.35 WAS 12.7	02/22/01	SMB
C3-12	01	W17 WAS W13	02/22/01	SMB
C8-25	01	WELD 17 WAS WELD 13	02/22/01	SMB
C4-12	01	ADDED W17	02/22/01	SMB
B1-12	01	W21 WAS W16	02/22/01	SMB
C8-25	01	WELD 21 WAS WELD 16	02/22/01	SMB
A2-12	01	W20 WAS W15	02/22/01	SMB
C8-25	01	WELD 20 WAS WELD 15	02/22/01	SMB
C8-13	01	W10 WAS W9	02/22/01	SMB
C8-25	01	WELD 10 WAS WELD 9	02/22/01	SMB
C8-13	01	12.7 WAS 12.5 IN 2 PLACES	02/22/01	SMB
-	01	TYP WAS REMOVED FROM DIMENSIONS IN ZONES A3-13 AND B4-13	02/22/01	SMB
-	01	REFERENCE NOTE 1 CALLOUT WAS REMOVED IN ZONES A3-13 AND B4-13	02/22/01	SMB
C8-25	01	ADDED WELD 13 AND WELD 14	02/22/01	SMB
D3-25	-	CONTINUED ON SHEET 25	02/22/01	SMB

WASTE PACKAGE DEPARTMENT

M&O Civilian Radioactive Waste Management System MANAGEMENT & OPERATING CONTRACTOR

SKETCH NUMBER SK-0219 | REVISION 01

SCALE 0.125 | SHEET 24 OF 25

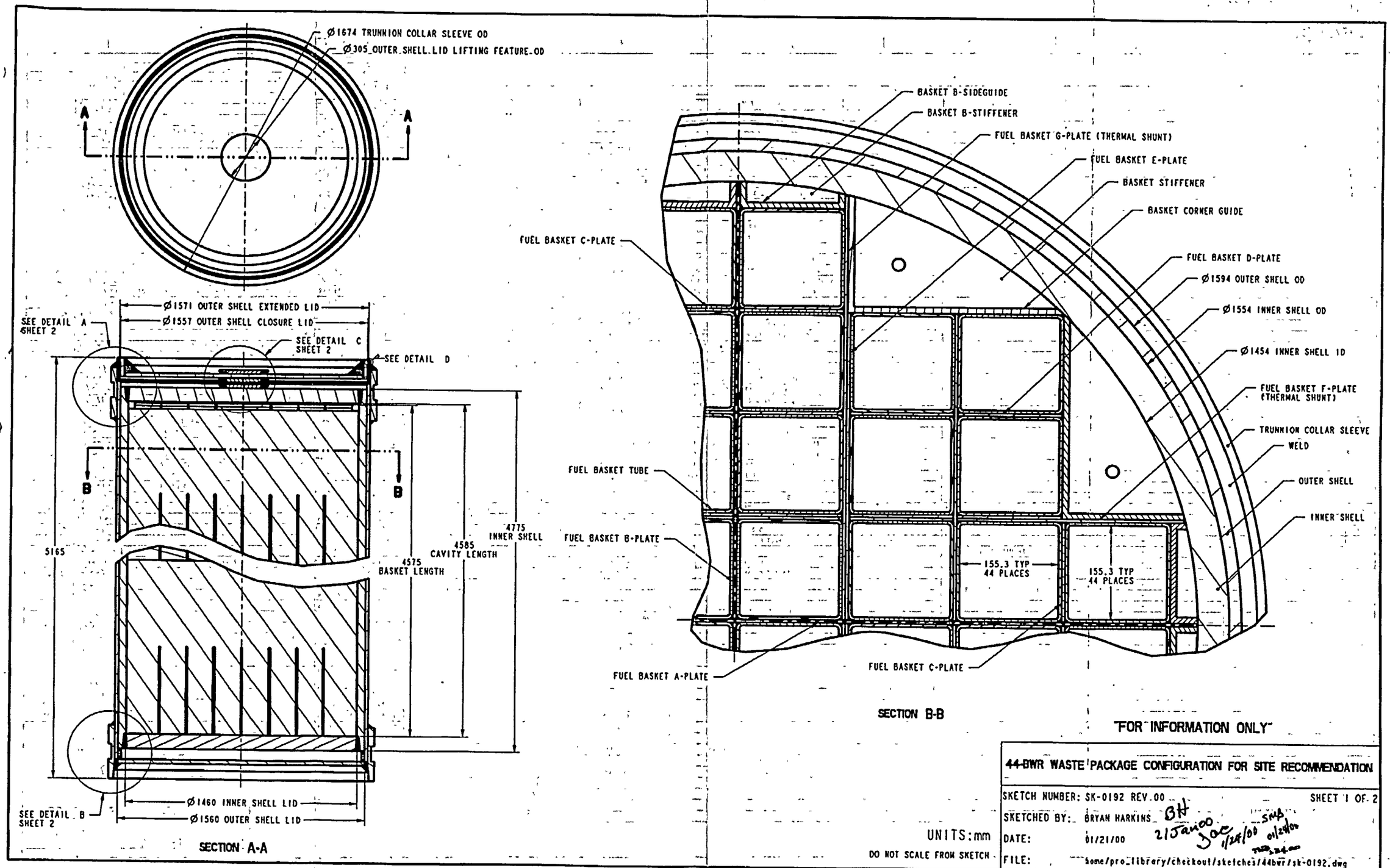
Ø1674 TRUNNION COLLAR SLEEVE OD
Ø305 OUTER SHELL LID LIFTING FEATURE OD
A
A
Ø1571 OUTER SHELL EXTENDED LID
Ø1557 OUTER SHELL CLOSURE LID
SEE DETAIL A SHEET 2
SEE DETAIL C SHEET 2
SEE DETAIL D
B
B
5165
4575 BASKET LENGTH
4585 CAVITY LENGTH
4775 INNER SHELL
SEE DETAIL B SHEET 2
Ø1460 INNER SHELL LID
Ø1560 OUTER SHELL LID
SECTION A-A
BASKET B-SIDEGUIDE
BASKET B-STIFFENER
FUEL BASKET G-PLATE (THERMAL SHUNT)
FUEL BASKET E-PLATE
BASKET STIFFENER
BASKET CORNER GUIDE
FUEL BASKET C-PLATE
FUEL BASKET D-PLATE
Ø1594 OUTER SHELL OD
Ø1554 INNER SHELL OD
Ø1454 INNER SHELL ID
FUEL BASKET F-PLATE (THERMAL SHUNT)
TRUNNION COLLAR SLEEVE
WELD
OUTER SHELL
INNER SHELL
FUEL BASKET TUBE
FUEL BASKET B-PLATE
155.3 TYP 44 PLACES
155.3 TYP 44 PLACES
FUEL BASKET A-PLATE
FUEL BASKET C-PLATE
SECTION B-B
"FOR INFORMATION ONLY"
44-BWR WASTE PACKAGE CONFIGURATION FOR SITE RECOMMENDATION
SKETCH NUMBER: SK-0192 REV 00
SHEET 1 OF 2
SKETCHED BY: BRYAN HARKINS
DATE: 01/21/00
FILE: home/pro_library/checkout/sketches/44bwr/sk-0192.dwg
UNITS: mm
DO NOT SCALE FROM SKETCH

This attachment presents the atomic density calculations for the homogenized assembly regions using Equations 1 and 2 in Section 5.2.3.

Table III-1. Fuel Region Volume

Fuel Region	Formula	Volume (cm^3)
Bottom end-fitting region volume	$13.81252^2*18.7579$	3578.73925
Active fuel region volume	$13.81252^2*365.76$	69781.7808
Plenum region volume	$13.81252^2*28.5496$	5446.85567
Top end-fitting region volume	$13.81252^2*22.2885$	4252.32727

Table III-2. Light Element Mass by Fuel Region for a GE 2/3 8x8 BWR Fuel Assembly

Element	Mass (kg)			
	Bottom End-Fitting Region	Active Fuel Region	Plenum Region	Top End-Fitting Region
O	0.0008	0.0977[a]	0.0074	0.0012
Al	-	0.0023	0.0119	0.0041
C	0.0038	0.0002	0.0015	0.0019
Co	0.0038	0.0033	0.0175	0.0074
Cr	0.9069	0.1302	0.3784	0.4680
Cu	-	0.0013	0.0068	0.0023
Fe	3.2208	0.1889	0.5649	1.3982
Mn	0.0954	0.0026	0.0259	0.0446
Nb	-	0.0033	0.0170	0.0058
N	0.0048	-	0.0006	0.0020
Ni	0.4970	0.2646	1.2610	0.6157
P	0.0021	-	0.0003	0.0009
S	0.0014	-	0.0004	0.0007
Si	0.0358	0.0013	0.0114	0.0173
Sn	0.0111	1.3845	0.1055	0.0169
Ti	-	0.0078	0.0408	0.0139
Zr	0.6374	79.6784	6.0704	0.9739

NOTE: [a] Oxygen from cladding, channel, spacers, and water rod.

Table III-3. UO_2 Composition

Isotope/Element	5.5-wt% ^{235}U		3.5-wt% ^{235}U	
	wt% in U[a]	Mass (g)	wt% in U[a]	Mass (g)
U235	5.5	11000	3.5	7000
U234	0.0490	98.0837	0.0300	60.0997
U236	0.0253	50.6	0.0161	32.2
U238	94.4257	188851.3163	96.4538	192907.7003
O[b]		23713.3389		23707.952

NOTES: [a] The isotopic composition for the enriched uranium is calculated according to the equations provided in Bowman et al. 1995 (see Section 5.2).
[b] Oxygen mass is the molecular mass for oxygen times the number of UO_2 moles in 200 kg UO_2.

Table III-4. Atomic Density by Element in the Active Fuel Region

Element/ Isotope	Nuclide ID[a]	Atomic Mass[b] (g)	5.5-wt% ^{235}U		3.5-wt% ^{235}U	
			Mass (g)	Atomic Density (atoms/b•cm)	Mass (g)	Atomic Density (atoms/b•cm)
O	8000.50c	15.9994	23811.109	1.2844E-02	23805.681	1.2841E-02
Al	13027.50c	26.981538	2.3	7.3565E-07	2.3	7.3565E-07
C	6000.50c	12.0107	0.2	1.4370E-07	0.2	1.4370E-07
Co	27059.50c	58.9332	3.3	4.8324E-07	3.3	4.8324E-07
Cr	24000.50c	51.9961	130.2	2.1610E-05	130.2	2.1610E-05
Cu	29000.50c	63.546	1.3	1.7655E-07	1.3	1.7655E-07
Fe	26000.50c	55.845	188.9	2.9191E-05	188.9	2.9191E-05
Mn	25055.50c	54.938049	2.6	4.0842E-07	2.6	4.0842E-07
Nb	41093.50c	92.90638	3.3	3.0653E-07	3.3	3.0653E-07
N	7014.50c	14.00674	0	0.0000E+00	0	0.0000E+00
Ni	28000.50c	58.6934	264.6	3.8905E-05	264.6	3.8905E-05
P	15031.50c	30.973761	0	0.0000E+00	0	0.0000E+00
S	16000.60c	32.066	0	0.0000E+00	0	0.0000E+00
Si	14000.50c	28.0855	1.3	3.9946E-07	1.3	3.9946E-07
Sn	50000.35c	118.71	1384.5	1.0065E-04	1384.5	1.0065E-04
Ti	22000.50c	47.867	7.8	1.4063E-06	7.8	1.4063E-06
Zr	40000.60c	91.224	79678.4	7.5377E-03	79678.4	7.5377E-03
^{234}U	92234.50c	234.040945	98.083672	3.6167E-06	60.099687	2.2161E-06
^{235}U	92235.50c	235.043922	11000	4.0388E-04	7000	2.5701E-04
^{236}U	92236.50c	236.045561	50.6	1.8500E-06	32.2	1.1772E-06
^{238}U	92238.50c	238.050785	188851.32	6.8463E-03	192907.7	6.9934E-03
Total				2.7831E-02		2.7827E-02

SOURCE: [a] Briesmeister 1997, Appendix G.
[b] Parrington et al. 1996.
NOTE: Nuclide identifier in the MCNP neutron data tables. The identifier for each element in the MCNP photon data tables is ZZZ000.01p, where ZZZ is the atomic number (Briesmeister 1997, pages 2-16 through 2-22).

Table III-5. Atomic Density by Element in the Hardware Regions

Element/ Isotope	Nuclide ID[a]	Atomic Mass[b] (g)	Bottom-End Fitting		Plenum		Top-End Fitting	
			Mass (g)	Atomic Density (atoms/b•cm)	Mass (g)	Atomic Density (atoms/b•cm)	Mass (g)	Atomic Density (atoms/b•cm)
O	8000.50c	15.9994	0.8	8.4141E-06	7.4	5.1137E-05	1.2	1.0622E-05
Al	13027.50c	26.981538	0.0	0.0000E+00	11.9	4.8762E-05	4.1	2.1520E-05
C	6000.50c	12.0107	3.8	5.3240E-05	1.5	1.3808E-05	1.9	2.2403E-05
Co	27059.50c	58.9332	3.8	1.0850E-05	17.5	3.2831E-05	7.4	1.7783E-05
Cr	24000.50c	51.9961	906.9	2.9350E-03	378.4	8.0461E-04	468.0	1.2747E-03
Cu	29000.50c	63.546	0.0	0.0000E+00	6.8	1.1831E-05	2.3	5.1258E-06
Fe	26000.50c	55.845	3220.8	9.7051E-03	564.9	1.1184E-03	1398.2	3.5458E-03
Mn	25055.50c	54.938049	95.4	2.9221E-04	25.9	5.2123E-05	44.6	1.1497E-04
Nb	41093.50c	92.90638	0.0	0.0000E+00	17.0	2.0231E-05	5.8	8.8411E-06
N	7014.50c	14.00674	4.8	5.7667E-05	0.6	4.7361E-06	2.0	2.0222E-05
Ni	28000.50c	58.6934	497.0	1.4249E-03	1261.0	2.3754E-03	615.7	1.4856E-03
P	15031.50c	30.973761	2.1	1.1409E-05	0.3	1.0709E-06	0.9	4.1150E-06
S	16000.60c	32.066	1.4	7.3469E-06	0.4	1.3792E-06	0.7	3.0916E-06
Si	14000.50c	28.0855	35.8	2.1450E-04	11.4	4.4877E-05	17.3	8.7234E-05
Sn	50000.35c	118.71	11.1	1.5735E-05	105.5	9.8258E-05	16.9	2.0162E-05
Ti	22000.50c	47.867	0.0	0.0000E+00	40.8	9.4239E-05	13.9	4.1125E-05
Zr	40000.60c	91.224	637.4	1.1758E-03	6070.4	7.3572E-03	973.9	1.5119E-03
Total				1.5912E-02		1.2131E-02		8.1952E-03

SOURCE: [a] Briesmeister 1997, Appendix G.
[b] Parrington et al. 1996.

NOTE: Nuclide identifier in the MCNP neutron data tables. The identifier for each element in the MCNP photon data tables is ZZZ000.01p, where ZZZ is the atomic number (Briesmeister 1997, pages 2-16 through 2-22).

This attachment presents the calculations of total neutron and gamma intensities and gamma source region fractions.

1. Bounding BWR SNF: Gamma Sources

Total intensity per assembly (photons/s) = Peaking factor * Gamma intensity in the fuel region (photons/s) + Gamma intensity in the bottom end-fitting region (photons/s) + Gamma intensity in the plenum region (photons/s) + Gamma intensity in the top end-fitting region (photons/s) = 1.4 * 3.5931E+15 + 5.9929E+12 + 3.0618E+13 + 7.2123E+12 = 5.0741E+15

Total intensity per WP (photons/s) = 44 * Total intensity per assembly (photons/s) = 44 * 5.0741E+15 = 2.2326E+17

Intensity fraction for each assembly region to be entered on the sp (source probability) card = Gamma source intensity for each assembly region in the WP / Total intensity per WP.

Intensity fraction for the active fuel region = 44 * 1.4 *3.5931E+15 / 2.2326E+17 = 9.9136E-01
Intensity fraction for the bottom end-fitting region = 44 * 5.9929E+12 / 2.2326E+17 = 1.1811E-03
Intensity fraction for the plenum region = 44 * 3.0618E+13 / 2.2326E+17 = 6.0341E-03
Intensity fraction for the top end-fitting region = 44 * 7.2123E+12 / 2.2326E+17 = 1.4214E-03

2. Hypothetical BWR SNF: Hardware and Active Fuel Region Gamma Sources

Total intensity per assembly (photons/s) = Peaking factor * Gamma intensity in the fuel region (photons/s) + Gamma intensity in the bottom end-fitting region (photons/s) + Gamma intensity in the plenum region (photons/s) + Gamma intensity in the top end-fitting region (photons/s) = 1.4 * 3.5931E+15 + 9.2934E+12 + 4.9784E+13 + 1.1088E+13 = 5.1005E+15

Total intensity per WP (photons/s) = 44 * Total intensity per assembly (photons/s) = 44 * 5.1005E+15 = 2.2442E+17

Intensity fraction for each assembly region to be entered on the sp (source probability) card = Gamma source intensity for each assembly region in the WP / Total intensity per WP.

Intensity fraction for the active fuel region = 44 * 1.4 *3.5931E+15 / 2.2442E+17 = 9.8624E-01
Intensity fraction for the bottom end-fitting region = 44 * 9.2934E+12 / 2.2442E+17 = 1.8221E-03
Intensity fraction for the plenum region = 44 * 4.9784E+13 / 2.8009E+17 = 9.7606E-03
Intensity fraction for the top end-fitting region = 44 * 1.1088E+13 / 2.2442E+17 = 2.1738E-03

3. Bounding BWR SNF: Neutron Source

Total intensity per WP (neutrons/s) = 44 * Peaking factor * Total intensity per active fuel region (neutrons/s) = 44 * 1.4 * 4.7166E+08 = 2.9054E+10

4. Average BWR SNF: Gamma Source

Total intensity per assembly (photons/s) = Peaking factor * Gamma intensity in the fuel region (photons/s) + Gamma intensity in the bottom end-fitting region (photons/s) + Gamma intensity in the plenum region (photons/s) + Gamma intensity in the top end-fitting region (photons/s) = 1.4 * 8.5786E+14 + 5.7546E+11 + 2.6224E+12 + 6.8324E+11 = 1.2049E+15

Total intensity per WP (photons/s) = 44 * Total intensity per assembly (photons/s) = 44 * 1.2049E+15 = 5.3015E+16

Intensity fraction for each assembly region to be entered on the sp (source probability) card = Gamma source intensity for each assembly region in the WP / Total intensity per WP.

Intensity fraction for the active fuel region = 44 * 1.4 * 8.5786E+14 / 5.3015E+16 = 9.9678E-01
Intensity fraction for the bottom end-fitting region = 44 * 5.7546E+11 / 5.3015E+16 = 4.7760E-04
Intensity fraction for the plenum region = 44 * 2.6224E+12 / 5.3015E+16 = 2.1765E-03
Intensity fraction for the top end-fitting region = 44 * 6.8324E+11 / 5.3015E+16 = 5.6706E-04

5. Average BWR SNF: Neutron Source

Total intensity per WP (neutrons/s) = 44 * Peaking factor * Total intensity per active fuel region (neutrons/s) = 44 * 1.4 * 4.2228E+07 = 2.6012E+09

File Listing KLQ 6/29/01

OFFICE OF CIVILIAN RADIOACTIVE WASTE MANAGEMENT
SPECIAL INSTRUCTION SHEET

1. QA: QA 3

Page: 1 of: 1

Complete Only Applicable Items

MB 6/29/01

This is a placeholder page for records that cannot be scanned.

2. Record Date 06/06/2001	3. Accession Number ATT-TO MOL.20010629.0077
4. Author Name(s) GEORGETA RADULESCU	5. Author Organization

6. Title/Description
DOSE RATE CALCULATION FOR THE 44-BWR UCF WASTE PACKAGE

7. Document Number(s) CAL-UDC-NU-000003	8. Version Designator REV. 01
9. Document Type DATA	10. Medium CD-ROM

11. Access Control Code
PUB

12. Traceability Designator
DC #27737

13. Comments
THIS IS A SPECIAL PROCESS CD-ROM AS PART OF ATTACHMENT V ~~AND CAN BE LOCATED THROUGH THE RPC~~

AB 07/02/01

THIS DATA SUBMITTAL TO THE RECORDS PROCESSING CENTER IS FOR ARCHIVE PURPOSES ONLY, AND IS NOT AVAILABLE FOR VIEWING OR REPRODUCTION

DC#27737 1 of 2

OFFICE OF CIVILIAN RADIOACTIVE WASTE MANAGEMENT
ELECTRONIC SOURCE FILE VERIFICATION

QA: N/A

1. DOCUMENT TITLE: Dose Rate Calculation for the 44-BWR UCF Waste Package	
2. DOCUMENT IDENTIFIER: CAL-UDC-NU-000003	3. REVISION DESIGNATOR: 01

ELECTRONIC SOURCE FILE INFORMATION

4. ELECTRONIC SOURCE FILE NAME WITH FILE EXTENSION PROVIDED BY THE SOFTWARE: CAL-UDC-NU-000003 REV01.doc		
5 DATE LAST MODIFIED. 05/25/2001	6. ELECTRONIC SOURCE FILE APPLICATION: (I E., EXCEL, WORD, CORELDRAW) WORD 97	7. FILE SIZE IN KILOBYTES: 1,122
8. FILE LINKAGE INSTRUCTIONS/INFORMATION. None		
9. FILE CUSTODIAN. (I.E., DC, OR DC APPROVED CUSTODIAN) DC	10. FILE LOCATION FOR DC APPROVED CUSTODIAN: (I E , SERVER, DIRECTORY) N/A	
11. PRINTER SPECIFICATION (I E , HP4SI) INCLUDING POSTSCRIPT INFORMATION (I E., PRINTER DRIVER) AND PRINTING PAGE SETUP. (I E., LANDSCAPE, 11 X 17 PAPER) Hewlett Packard Laser Jet 5 Si Landscape, 11x17, paper for Attachments I and II Portrait, 8.5x11, paper for the remainder		
12. COMPUTING PLATFORM USED: (I E., SUN) PC 113412	13. OPERATING EQUIPMENT USED: (I.E., UNIX, SOLARIS) WINDOWS	
14. ADDITIONAL HARDWARE/SOFTWARE REQUIREMENT USED TO CREATE FILE(S): None		15 ACCESS RESTRICTIONS: (IF ANY) None

COMMENTS/SPECIAL INSTRUCTIONS

16.
Attachment V for CAL-UDC-NU-000003 REV 01 is provided on a compact disk.
See attached #5, 6, and 7.

CERTIFICATION

17. NAME (Print and Sign) Georgeta Radulescu Georgeta Radulescu			18. DATE: 05/30/2001
19. ORGANIZATION: BSC	20. DEPARTMENT: Waste Package	21. LOCATION/MAILSTOP: 1026E	22. PHONE: 5-4546

DC USE ONLY

23. DATE RECEIVED: 05/31/01	24. DATE REVIEWED: 06/07/2001	25. DATE FILES TRANSFERRED: 06/07/2001
26. NAME (Print and Sign): Marina Blackwell Marina Blackwell		27. DATE: 06/07/2001

282

44-bwr wp (D:)

File Edit View Help

Name	Size	Type	Modified
abg.io	315KB	IO File	01/19/2001 4:10 ...
abn.io	265KB	IO File	01/22/2001 8:37 AM
b2bg.io	287KB	IO File	01/22/2001 8:37 AM
bbg.io	291KB	IO File	01/22/2001 8:38 AM
bbn.io	270KB	IO File	01/22/2001 8:38 AM
bg.io	163KB	IO File	01/22/2001 8:38 AM
bn.io	151KB	IO File	01/22/2001 8:38 AM

7 object(s) 1.89MB