Official Transcript of Proceedings

NUCLEAR REGULATORY COMMISSION

Title: Advisory Committee on Reactor Safeguards
Plant License Renewal Subcommittee

Docket Number: (n/a)

Location: Rockville, Maryland

Date: November 05, 2014

Work Order No.: NRC-1196 Pages 1-122

NEAL R. GROSS AND CO., INC.
Court Reporters and Transcribers
1323 Rhode Island Avenue, N.W.
Washington, D.C. 20005
(202) 234-4433

1 UNITED STATES OF AMERICA

2 NUCLEAR REGULATORY COMMISSION

3 + + + + +

4 ADVISORY COMMITTEE ON REACTOR SAFEGUARDS

5 (ACRS)

6 + + + + +

7 PLANT LICENSE RENEWAL SUBCOMMITTEE

8 + + + + +

9 WEDNESDAY

10 NOVEMBER 5, 2014

11 + + + + +

12 ROCKVILLE, MARYLAND

13 + + + + +

14 The Subcommittee met at the Nuclear

15 Regulatory Commission, Two White Flint North, Room

16 T2B3, 11545 Rockville Pike, at 1:30 p.m., Gordon

17 Skillman, Chairman, presiding.

18 COMMITTEE MEMBERS:

19 GORDON R. SKILLMAN, Chairman

20 RONALD BALLINGER, Member

21 PETER RICCARDELLA, Member

22 HAROLD B. RAY, MEMBER

23 MICHAEL T. RYAN, Member

24 STEPHEN SCHULTZ, Member

25 JOHN W. STETKAR, Member

1 DESIGNATED FEDERAL OFFICIAL:
2 KENT HOWARD
3 ALSO PRESENT:
4 JOHN CARLIN, TVA
5 DARREN BOEHM, TVA
6 DENNIS DIMOPOULOS, TVA
7 ERIN HENDERSON, TVA
8 MIKE HENDERSON, TVA
9 ADAM KEYSER, TVA
10 HENRY LEE, TVA
11 DENNIS LUNDY, TVA
12 WILLIAM PIERCE, TVA
13 PAUL SIMMONS, TVA
14 CHRIS WEBB, TVA
15 NRC STAFF:
16 ALLEN HISER, NRR/DLR
17 ROGER KALIKIAN
18 CHRIS MILLER, NRR/DLR
19 JOEL RIVERA-ORTIZ, RII (by teleconference)
20 EMMANUEL SAYOC, NRR/DLR
21
22
23
24
25

1 T-A-B-L-E O-F C-O-N-T-E-N-T-S

13

14

15

16

17

18

19

20

21

22

23

24

25

1 P-R-O-C-E-E-D-I-N-G-S

2 (1:13 p.m.)

3 CHAIRMAN SKILLMAN: Good afternoon.
4 Welcome. I'm Gordon Skillman, Chairman of the Plant
5 License Renewal Subcommittee. The subcommittee will
6 review the license renewal application for the Sequoyah
7 Nuclear Plant Units 1 and 2.
8 ACRS members in attendance are Harold Ray,
9 Ron Ballinger, Steve Schultz, Dana Powers, Mike Ryan.
10 We anticipate John Stetkar, the ACRS chairman. The
11 designated federal official is Kent Howard.
12 This afternoon we will hear presentations
13 from the Division of License Renewal from Region II.
14 And from Tennessee Valley Authority regarding this
15 matter, this subcommittee will gather information,
16 analyze relevant issues and facts and formulate
17 proposed positions and actions as appropriate for
18 deliberation by the committee.
19 The rules for participation in today's
20 meeting have been announced as part of the notice of
21 this meeting previously published in the Federal
22 Register.
23 We have not received written comments or
24 requests for time to make oral statements from members
25 of the public regarding today's meeting. The entire

1 meeting will be open to public attendance.
2 There will be a phone bridge line. To
3 preclude interruption of the meeting, the phone will
4 be placed in a listen in mode during the presentations
5 and the committee discussion.
6 A transcript of this meeting is being kept
7 and will be made available as stated in the Federal
8 Register notice.
9 Therefore, I request that participants in
10 this meeting use the microphones located throughout the
11 meeting room when addressing the subcommittee.
12 The participants are also requested to
13 please identity themselves and to please speak with
14 sufficient clarity and volume so that they can be
15 readily heard.
16 I also ask that all attendees silence their
17 electronic devices. We will now proceed with the
18 meeting, and I call upon Chris Miller to begin the
19 presentation.
20 (Simultaneous speaking)
21 MALE PARTICIPANT: I just had him a minute
22 ago. He's on his way over.
23 CHAIRMAN SKILLMAN: Okay. We'll wait. We
24 will wait.
25 (Whereupon, the above-entitled matter

1 went off the record at 1:16 p.m. and resumed at 1:19
2 p.m.)
3 CHAIRMAN SKILLMAN: Ladies and gentlemen,
4 we're back in session. I had gotten to the point of
5 the script where I was going to ask Chris Miller,
6 welcome Chris, to please proceed from here.
7 (Simultaneous speaking)
8 MR. MILLER: My calendar said 1:30, so --
9 CHAIRMAN SKILLMAN: I don't know where the
10 error came. We had been at 1300 for the last two
11 months, so I don't know where the 30 minute change came.
12 MR. MILLER: Yes, I'm not aware either, but
13 I think we can go ahead and get started.
14 (Simultaneous speaking)
15 MR. MILLER: Thank you. Whatever the
16 discrepancy was, I apologize.
17 CHAIRMAN SKILLMAN: Thank you everybody for
18 your patience. Thank you. Chris, go ahead.
19 MR. MILLER: Thank you, Mr. Chairman. I'm
20 Chris Miller, Director of Division of License Renewal.
21 With me here I have Yoira Diaz, and she's the Chief of
22 Projects, Branch 1.
23 We have a number of our members in the room,
24 and I won't introduce them all, but we'll introduce most
25 as they come up. I think we have Joel Rivera on the

phone. Can we just test that?

CHAIRMAN SKILLMAN: On the bridge line, anyone that's there, please speak up.

MALE PARTICIPANT: I don't know that it's --

MR. MILLER: I'm told they're still trying to get that, so we'll work to get him in.

CHAIRMAN SKILLMAN: Okay.

MR. MILLER: He's our lead inspector, and he's in Region II. So hopefully we'll be able to make that tie in. And our presentation will be done by Mr. Emmanuel Sayoc, our Safety PM.

And also our Senior Technical Advisor, Dr. Allen Hiser, he's right there. And as I mentioned, after the presentation we'll introduce one by one. Thank you.

This is our ACRS subcommittee meeting for the license renewal application of the Sequoyah Nuclear Power Units 1 and 2. The SER will, with open items was issued on September 29, 2014 with one open item.

And its resolution will be documented in the final SER. The one open items is regarding the reactor vessel internals program related to the materials reliability program, MRP 227, Action Item 1.

It is summarized in the SER reviewed by the ACRS members. Since the issuance of the SER with open

1 items, the staff has been working diligently to try to
2 get resolution on this item.
3 The staff will summarize its completed
4 review in the final SER and present its findings in the
5 ACRS to the full committee.
6 At this time I'd like to turn the
7 presentation over the Tennessee Valley Authority and
8 the Site Vice President, John Carlin to introduce his
9 people and commence the presentation.
10 MR. CARLIN: Thanks, Chris. Mr. Chairman,
11 I'm John Carlin. I'm the Site Vice President at
12 Tennessee Valley Authority's Sequoyah Nuclear Plant.
13 We really appreciate the opportunity to be
14 here with you today to review the license application
15 for the Sequoyah Plan.
16 This has been a long four year journey, and
17 it's been a very, very important journey for the
18 station. And we look forward to discussing Sequoyah
19 with you.
20 To start mainly, the members of the team at
21 the table to introduce themselves.
22 MR. SIMMONS: Paul Simmons, I'm the station
23 plant manager.
24 MR. PIERCE: William Pierce, the site
25 engineer and director at the station.

1 MR. DIMOPOULOS: Dennis Dimopoulos from
2 engineering.
3 MR. HENDERSON: Michael Henderson,
4 engineering programs manager.
5 MS. HENDERSON: I'm Erin Henderson. I'm
6 the site licensing manager.
7 MR. LEE: Henry Lee, licensing.
8 MR. CARLIN: Today we also have brought with
9 us a team of subject matter experts. I'd like the
10 entire group to stand as a group.
11 CHAIRMAN SKILLMAN: The center of gravity in
12 the room tilts.
13 MR. CARLIN: If you feel the building tilt,
14 back up. Thank you very much. We really appreciate
15 the men and women who have joined us today and their
16 support.
17 We also have other people on the telephone
18 bridge listening in to provide additional technical
19 support to your discussions today.
20 Paul Simmons will briefly discuss Sequoyah's
21 plant history and background. Paul is a long tenured
22 person, previously a senior reactor operator at the
23 facility.
24 William Pierce will talk about the major
25 modifications. Dennis Dimopoulos and Erin Henderson

1 will talk about the license renewal application as well
2 as the safety evaluation.
3 And Michael Henderson will discuss our open
4 item. Again, we thank you for meeting with us today,
5 and that concludes my comments.
6 MR. SIMMONS: Thanks, John. Okay. We'll
7 go to Slide 7. The Sequoyah Unit 1, 2 units are located
8 on a 525 acre plot adjacent to the Chickamauga reservoir
9 on the Tennessee River, approximately 18 miles
10 northeast of Chattanooga, Tennessee.
11 Sequoyah supplies approximately 8 million
12 people through 158 distributors in the Tennessee Valley
13 area. Our plant is a two unit Westinghouse 4-loop
14 pressurized water reactor.
15 The generator output capability of each unit
16 at Sequoyah is 1199 megawatts of output rated core
17 power. The Sequoyah containment is a freestanding
18 steel vessel with an ice condenser and separate
19 reinforced concrete shield building.
20 We have two natural draft cooling towers used
21 in helper mode as required to maintained the Tennessee
22 River and environmental commitments that we've made for
23 operating the plant.
24 We have two switchyards on the facility that
25 you can see on the overhead view, 161-KV switchyard and

1 a 500-KV switchyard.

2 The Unit 1 output goes to the 500-KV

3 switchyard, and the Unit 2 output goes to the 161

4 switchyard. And both those switchyard are

5 interconnected through transformers.

6 We'll go to Slide 9. Slide 9 slows where the

7 station is located relative to the city of Chattanooga,

8 Tennessee.

9 In Slide 10, a little bit more of the

10 background. The construction permit for Sequoyah was

11 issued in May 1970. Our operating license for Unit 1

12 was issued September 17, 1980. For Unit 2, it was

13 issued September 15, 1981.

14 And commercial operation for Unit 1

15 commenced July 1, 1981 and for Unit 2, June 1, 1982.

16 We did do a power upgrade of approximately 44 megawatts

17 thermal on both units in 2002.

18 And we replaced steam generators on Unit 1

19 in 2003 and most recently on Unit 2 in 2013. And today

20 we've had very good operational performance out of

21 these steam generators on both units.

22 Our current status, Sequoyah Unit 1 and Unit

23 2 are operating at 100 percent power. Sequoyah Unit

24 1 is at 100 percent on our INPO Index, and Sequoyah Unit

25 2 is 100 percent on the INPO index.

1 It gets top quartile performance, 97.5. Our
2 equipment reliability index for Unit 1 is at 97 percent,
3 and at Unit 2 it's at 98 percent. And our next
4 refueling outage for Unit 1 is April 2015, and for Unit
5 2 it's November 2015.
6 CHAIRMAN SKILLMAN: Paul, those are
7 admirable numbers. What is the difference, if it's
8 worth talking about, the equipment reliability index
9 between the two units.
10 MR. SIMMONS: This is a slight difference in
11 the index, Mr. Chairman, of 1 percent. And typically
12 what that has been for us has been some unplanned LCOs
13 that we're working through over the last year that have
14 slightly differed between Unit 1 and Unit 2.
15 CHAIRMAN SKILLMAN: Thank you.
16 MR. SIMMONS: Mr. Chairman, that completes
17 my plant overview presentation pending any questions.
18 I'll turn it over to William Pierce.
19 MR. PIERCE: Good afternoon. My name is
20 William Pierce, and this afternoon I will be going over
21 major modifications and near-term improvements that
22 have been conducted at the station.
23 The first item that I'll be going over, which
24 is listed on Page, Slide 13 includes installing full
25 strength weld overlays on pressurizer locations on Unit

1 in 2007, and we installed four structure weld overlays on pressurizer locations on Unit 2 in 2006.

There were two purposes for installing full strength weld overlays on these locations. The first purpose was for volumetric inspection purposes, and the second purpose was for primary water stress corroding, cracking resistance.

The second item that was listed there far as major modifications that have been completed at Sequoyah includes replacing portions of, balance the plant side piping with flow accelerated corrosion resistant piping.

The material of choice that we've chosen to use at the station has been two and a quarter chrome, 1 percent moly, which is for accelerated corrosion resistance.

As Paul mentioned earlier, we did replace steam generators on Unit 1 in 2003 and then on Unit 2 in 2013. And the tubing material that we currently use for our steam generators is alloy 69.

MEMBER BALLINGER: Is that thermally treated?

MR. PIERCE: Yes, sir. That is correct, thermally treated alloy 69. In addition, we have replaced main condenser tube bundles with titanium

1 tubes. And we also have titanium clad tube sheets.
2 Also, we replaced portions of our carbon
3 steel sacrilated raw water piping. Currently we have
4 replaced piping this physical year in 2014.
5 We do have funding scheduled in the out years
6 for 2015, 2016 and 2017 for piping replacements. In
7 addition, we replaced fire protection pumps, tanks and
8 changed water source from raw water to potable water.
9 And to close out this slide, we replaced
10 containment spray heat exchanger 1B and component
11 cooling water heat exchangers.
12 CHAIRMAN SKILLMAN: Let me ask you a
13 question on that issue. I see in the SER the
14 description that you're now taking suction from, one
15 each, from your 300,000 gallon potable water tanks.
16 And those are fed by a municipal utility. To
17 what extent is this unit dependent upon other municipal
18 utilities for services such as that?
19 MR. DIMOPOULOS: With respect to the fire
20 water system, we do take, I'm sorry. I'm Dennis
21 Dimopoulos from engineering, Tennessee Valley
22 Authority.
23 The potable water system that we use to
24 supply our fire header system does come from a local
25 utility and has an additional back up onsite. We could

1 use raw water from the river associated with that.
2 CHAIRMAN SKILLMAN: Okay. That's half my
3 question. The other half is to what extent are you
4 depending on offsite municipal utilities for services
5 such as that. So water is coming in from an offsite
6 vendor --
7 MR. DIMOPOULOS: Right.
8 CHAIRMAN SKILLMAN: -- for instance. Are
9 there are dependencies like that associated with the
10 unit that are substantive, that we should talk about?
11 MR. DIMOPOULOS: Mr. Chairman, I cannot
12 think of any other outside sources but do note the
13 potable water, and we recognize that's a possibility
14 that we could lose that.
15 And we do design around it such that we have
16 onsite backup, so we do not depend on a municipality.
17 MR. SIMMONS: Mr. Chairman, the other piece
18 that we do have services from is for our sewage
19 treatment. We use that with the local municipality.
20 So that's the other interface that we have with the
21 local Soddy-Daisy city.
22 CHAIRMAN SKILLMAN: Okay. Does that,
23 should we interpret then you don't have a sewage plant
24 onsite, and you do not have sewage operators on site?
25 MR. SIMMONS: That's correct.

1 CHAIRMAN SKILLMAN: Yes, sir. I
2 understand. Paul, thank you. Dennis, thank you.
3 MR. SCHULTZ: William, on the slide that
4 we're discussing here in the last three bullets here,
5 has there been equal treatment on both units in regard
6 to these modifications?
7 MR. PIERCE: Yes, that is correct, Mr.
8 Schultz.
9 MR. SCHULTZ: Thank you.
10 CHAIRMAN SKILLMAN: Let me ask one more
11 somewhat related, Paul, to your comment. One of the
12 portions of the SER communicates regarding station
13 drainage. And I'll read the text so you can understand
14 why I'm asking the question.
15 The license renewal application, Section
16 2.3.3.8 states the purpose of the station drainage and
17 sewage systems is to provide drainage for various
18 equipment and buildings and to collect and process
19 sewage from the plant facilities.
20 The station drainage system collects
21 building roof and floor drains, equipment drains, yard
22 drainage from the entire site, with the exception of
23 the reactor building and auxiliary building, which use
24 the waste disposal system for drainage collection.
25 The station drainage and sewage systems

1 together provide the sanitary water services for the
2 plant. I'm presuming that your roof drains and other
3 yard drains are separated from sewage.
4 And your sewage is dedicated to your offsite
5 vendor, whereas the yard drains and other find their
6 way back into the Chickamauga reservoir or whatever it
7 is. Is that accurate?
8 MR. SIMMONS: That's correct, Mr. Chairman.
9 CHAIRMAN SKILLMAN: Okay. Thank you.
10 Please proceed.
11 MR. PIERCE: Moving to Slide 14, on Slide 14
12 I'll be talking about the near term and future plant
13 improvements. The first item I'll be going over is
14 items that we have scheduling for our upcoming
15 refueling outage, which is in the spring, which is April
16 2015.
17 We have plans to replace approximately ten
18 thimble tubes. In addition, we plan on replacing the
19 containment spray heat exchanger in 1A.
20 For the fall refueling outage on Unit 2, we
21 will be replacing approximately ten thimble tubes on
22 that particular unit also.
23 As far as the outyears as far as plan
24 improvements, as mentioned earlier, we'll continue to
25 replace portions of carbon steel and safety-related raw

1 water piping.

2 And also, we have begun to design and began

3 installing cathodic protection. And as far as

4 cathodic protection, we're looking to start the design

5 in 2015 and complete design as far as implementation

6 in 2017.

7 MEMBER BALLINGER: Cathodic protection of

8 what?

9 MR. PIERCE: Cathodic protection of buried

10 piping.

11 MEMBER BALLINGER: Oh, buried pipe?

12 MR. PIERCE: Yes.

13 CHAIRMAN SKILLMAN: What is the status of

14 cathodic protection today?

15 MR. PIERCE: Mr. Chairman, the current

16 status of cathodic protection today, as I mentioned in

17 my slide, we have started the design which will start

18 in 2015.

19 We will have full implementation in 2017, and

20 we do have the high pressure fire protection tank that

21 has cathodic protection. And that is the current

22 status as of today, Mr. Chairman.

23 CHAIRMAN SKILLMAN: So one tank or two tanks

24 and that's it today?

25 MR. SIMMONS: Two tanks.

1 CHAIRMAN SKILLMAN: The two 300,000 gallon
2 tanks, and that is the extent of your --
3 MR. PIERCE: Yes, sir.
4 CHAIRMAN SKILLMAN: -- cathodic protection.
5 How then do you know that for all of those years, with
6 all of that buried piping, your buried piping is okay?
7 MR. PIERCE: Mr. Chairman, I'm going to ask
8 Mr. Kyle Loomis to speak to your question.
9 MR. LOOMIS: Kyle Loomis, engineering
10 programs. Mr. Chairman, we have implemented a buried
11 piping program at the site. It's based on the NEI 09-14
12 initiative and milestones.
13 During this time period we have done both
14 proactive and opportunistic inspections on the buried
15 piping at the plant.
16 CHAIRMAN SKILLMAN: Would that same program
17 be applied through your buried tanks also?
18 MR. LOOMIS: Not for our seven day tanks.
19 That's a separate program from what the UPTI program,
20 as we call it, under piping and tanks integrity
21 initiative.
22 MR. DIMOPOULOS: Mr. Chairman, if I may,
23 this is Dennis Dimopoulos. The only, we do not have
24 buried tanks for the Sequoyah Nuclear Plant with the
25 exception of the diesel generator seven day tanks.

1 CHAIRMAN SKILLMAN: Thank you.

2 MR. PIERCE: And to conclude, the last item
3 I will be discussing as far as multi year projects is
4 that we will continue to replace CRD and auxiliary HVAC
5 cooling coils.

6 And that ends my presentation, Mr. Chairman.
7 Now, I'll be turning over to Erin Henderson who will
8 go over our license renewal application preparation.

9 MS. HENDERSON: Thanks William. My name's
10 Erin Henderson. I'm the site licensing manager, and
11 I'm going to talk about how we developed our license
12 renewal application.

13 As John mentioned, this has been a few years
14 in the making here. We began the process of developing
15 our application and assembling our team in 2010.

16 At that time we put together a team of
17 experienced individuals that had been involved in
18 several other successful license renewal projects, and
19 they provided us the support in developing our
20 application.

21 They brought along with the their proven
22 processes and procedures. Most of the key players that
23 were involved in that application are here in the room
24 today and were previously introduced when John had
25 everybody stand up.

1 Our qualified site program owners and system
2 engineers were trained in the license renewal process.
3 Over the past few years they've provided the reviews
4 of aging management reports and the program evaluation
5 report.
6 And their knowledge and feedback is really
7 key to this process and is really especially evident
8 in the operating experience portion of the application.
9 CHAIRMAN SKILLMAN: Erin, may I ask you to
10 describe briefly the type of training, the content of
11 the training for those individuals, please?
12 MS. HENDERSON: I'm going to have Dennis
13 Lundy speak to that.
14 MR. LUNDY: My name is Dennis Lundy for the
15 license renewal project. The training we conducted is
16 a fairly standard page developed by Altran. It's
17 covering the capital systems, electrical systems,
18 civil structures.
19 It talks about aging effects, managing those
20 aging effects, how to detect aging effects when you're
21 walking through the plant. It's to help the team
22 develop that understanding.
23 CHAIRMAN SKILLMAN: Thank you.
24 MEMBER POWERS: Tell us what it does with
25 respect to coatings?

1 MR. LUNDY: I'm sorry.

2 MEMBER POWERS: Could you tell us what it

3 does with respect to coatings?

4 MEMBER POWERS: Did the training include

5 coatings? The training did not include coatings.

6 (Simultaneous speaking)

7 CHAIRMAN SKILLMAN: Erin, please continue.

8 MS. HENDERSON: Thanks. We've had a lot of

9 very experienced individuals review, provide reviews

10 and comments on the technical reports, and that

11 supported the application.

12 The project members have been engaged in NEI

13 working groups, and so the project has been represented

14 along with, in the civil, mechanical and electrical

15 working groups as well.

16 We did an industry peer review of the

17 application, and that resulted in over 300 comments

18 that we individually dispositioned. Dennis

19 Dimopoulos is going to provide some more insights into

20 the outcome of the application.

21 MR. SCHULTZ: When was the industry peer

22 review conducted?

23 MS. HENDERSON: Dennis Lundy will --

24 MR. LUNDY: Would you repeat the question,

25 please?

1 MR. SCHULTZ: When was the industry peer
2 review conducted?
3 MR. LUNDY: In the summer of 2012.
4 MR. DIMOPOULOS: Okay. We're on Slide 18
5 right now, and I'll talk a little bit about the
6 application details. It was submitted in January
7 2013. It was developed using the latest provision of
8 the NUREG-1801 or the GALL report. That's Rev 2.
9 We used NEI 95-10 for the scope and guidance
10 and the aging management review details, and we did have
11 extensive peer reviews, over 15 peer reviews, as we went
12 through the process.
13 Additionally, along with this latest
14 revision of the GALL, we did address six interim staff
15 guidance documents and two more interim staff guidance
16 documents that came up during the REI process.
17 In all, there was 4100 aging management
18 reviewed line items. That's looking at component,
19 environment and developing those aging management
20 programs.
21 And all 43 aging management programs are
22 required to manage the effects for the period of
23 extended operation, 31 existing and 12 new.
24 If we move over to Slide 19, we'll look at
25 a breakdown that summarizes aging management program

1 reviews in relation to the GALL.

2 So for our application we identified 20

3 programs that we felt were consistent with the GALL and

4 following the SER issuance. We've got a very good,

5 rigorous region review and inspections and NR review

6 through our process.

7 And you'll notice the delta with the SER. We

8 had three programs that during that process were not

9 consistent with the GALL and required enhancements.

10 And one of those required exceptions. And that one was

11 associated with the fire water system.

12 So moving on to Slide 20, license renewal

13 commitments. It is included, that the commitments

14 will be included in FSAR supplement, which is Appendix

15 A of the license renewal application.

16 It will be tracked and managed through our

17 commitment tracking system and our corrective action

18 program. In all, 44 commitments associated with aging

19 management programs, 43 associated with aging

20 management programs and one associated with the

21 operating experience program, excuse me.

22 Slide 21 we'll talk about implementation.

23 So as we're moving through our issuance of the SER, and

24 we're focusing, shifting from application development

25 to implementation of commitments.

1 So we have Michael Henderson to my right. He
2 is participating in the NEI implementation working
3 group. Additionally, the site has selected a
4 permanent license renewal coordinator, and that is Joy
5 Williams who is here with us today.
6 And she is presently engaged in a review of
7 operating experience for aging management program
8 impacts and implementation efforts.
9 CHAIRMAN SKILLMAN: Before you change, this
10 is probably the best place to fit in my next question,
11 and it had to do with scoping.
12 In the status report that the staff provided
13 to the ACRS for the ACRS review for this meeting, the
14 wording is as follows.
15 The audit team determined that the
16 applicant's scoping methodology was generally
17 consistent with 10 CFR 54.
18 However, the audit team determined that
19 additional information was required in order for staff
20 to complete its review.
21 And the three bullets are the methods used
22 and the basis for any conclusions in which components
23 identified as safety-related in the plant equipment
24 database were not included in the scope for license
25 renewal.

1 The second bullet, methods used and basis for
2 conclusions in which Category 1 structures were not
3 included in the scope for license renewal.
4 And the third bullet, methods used and basis
5 for conclusions in which non safety-related structures
6 adjacent to Category 1 safety-related structures were
7 not included in the scope. Would you please speak to
8 that?
9 MR. DIMOPOULOS: Mr. Chairman, I'm going to
10 ask Mr. Lundy to provide some additional details.
11 MR. LUNDY: My name is Dennis Lundy with the
12 license renewal project. On the first category used,
13 there's, in our equipment database at Sequoyah in some
14 cases we have conservatively classified the components
15 of safety-related.
16 One example would be our fifth diesel
17 building. It was a, as part of the original plant
18 design along about the first or second year there's
19 going to be a new diesel building built.
20 And the components inside that building,
21 although they were never put in service, they were still
22 classified in the database as safety-related.
23 We never had, we wanted to maintain that
24 equipment in a safety-related status, but that
25 equipment has never been operational. It serves no

1 intended function for license renewal.

2 So that is an example. There are several of

3 those like that. The equipment database was

4 classified conservatively by a management decision and

5 left that way.

6 We went through each one of those. We

7 through the whole database with the staff, reviewed

8 each one of the items identified and developed the

9 understanding of why those were there. We made no

10 changes as a result of that.

11 The second two items, I think, if you would

12 repeat that question. Make sure I answer it --

13 (Simultaneous speaking)

14 CHAIRMAN SKILLMAN: The first category was

15 category where there were safety-related items in the

16 plant database that were not included in the scope of

17 license renewal.

18 MR. LUNDY: Okay. That's what I just did.

19 CHAIRMAN SKILLMAN: And I can understand

20 that. As long as none of those were credited for any

21 license or design basis issue.

22 MR. LUNDY: Yes, sir.

23 CHAIRMAN SKILLMAN: The second category is

24 Category 1 structures not included within the scope for

25 license renewal. Might that be the building in which

1 that engine was located or something such as that?
2 MR. LUNDY: Again, we have, one example is
3 our waste processing building. That particular
4 building in SAR is classified as a Category 1 structure.
5 However, there is no safety-related components inside
6 that building.
7 So we had classified that as basically an
8 alpha-2 structure, and assessment of the staff, and we,
9 they concurred with our classification that it was not,
10 even though it was a Category 1 structure, it didn't
11 need to be in the rule as a Category 1 structure.
12 CHAIRMAN SKILLMAN: I see.
13 MR. LUNDY: The last one dealt with our
14 service building. Our service building is adjacent to
15 our control building, auxiliary building.
16 With the initial scoping it was not in scope.
17 We did questioned on that by the staff. At one time
18 we had an analysis that said that building will not fall
19 on the control building, auxiliary building under a
20 seismic event.
21 After reviewing those, that documentation we
22 felt the station made the decision that is the right
23 thing to go ahead and bring that particular facility,
24 the service building into scope.
25 CHAIRMAN SKILLMAN: So it is now seismic so

1 that it can't fall on the adjacent building?

2 MR. LUNDY: It is not seismic, but we brought

3 that into, that building will now be monitored as part

4 of a structure monitoring program just like a Category

5 1 structure.

6 So we're given the confidence that it will

7 perform its function. It will not fall on that, the

8 adjacent building. Yes, sir.

9 CHAIRMAN SKILLMAN: You've given

10 approximately four examples. Is that the totality of

11 this particular issue, or is there more that we need

12 to hear about?

13 MR. LUNDY: That's all that I can think of

14 right now, Mr. Chairman.

15 CHAIRMAN SKILLMAN: That's the whole story

16 as far as you can tell?

17 MR. LUNDY: Yes, sir.

18 CHAIRMAN SKILLMAN: Thank you. Please

19 proceed.

20 MR. DIMOPOULOS: Okay. We're still on

21 Slide 21, so basically our Sequoyah program owners,

22 many of whom you see here today, they are engaged in

23 the review of our license renewal implementation issues

24 and will guide implementation of the commitments in

25 regard to their specific programs as we move forward.

1 MR. SCHULTZ: Dennis, before you move on,
2 could you elaborate on the third bullet there?
3 Describe what is meant by an informal OE review and put
4 that in the context of what you mean by doing things
5 in advance of a fleet procedural guidance.
6 So is the fleet procedural guidance holding
7 anything up for Sequoyah?
8 MR. DIMOPOULOS: No, sir. Mr. Schultz, one
9 of the commitments that we made was to the operating
10 experience program.
11 And we're going to revise that program along
12 with some other station procedures to put the permanent
13 hooks and I say the culture into the station to address
14 things from a license renewal perspective.
15 So it goes further than the program owners
16 we see here today that we've trained, so it becomes
17 sustained long-term.
18 Until those procedures get implemented, we
19 have basically a gap measure that we've closed to
20 establish a person in the interim until all those
21 procedures and the commitments, some of them include
22 training for our initial and continuing training
23 programs, et cetera.
24 Until that gets closed, we have actions in
25 place where we're going to review the OE for those

1 triggers that may cause revisions to the aging
2 management programs.
3 MR. SCHULTZ: Okay. And you've identified
4 that individual in addition to the aging management
5 coordinator?
6 MR. DIMOPOULOS: That is the aging
7 management coordinator.
8 MR. SCHULTZ: That is the individual.
9 Okay. I appreciate that. Thank you.
10 CHAIRMAN SKILLMAN: Let me build on Dr.
11 Schultz's question just for a second. Here you are
12 asking for a future license extension of 20 years.
13 You're not going to use this for a couple of years.
14 It's going to take awhile to get it. Once
15 you have it you're not going to use it immediately.
16 You're only going to use it once your current license
17 expires on Unit 1 and then on Unit 2.
18 If I can be so bold, in the answer that you
19 gave to Dr. Schultz, what might you be thinking about,
20 preparations today, for a subsequent life renewal?
21 So you run this plant from 40 to 60. Is
22 anybody thinking 60 to 80 at this point in your
23 considerations?
24 MR. DIMOPOULOS: Mr. Chairman --
25 CHAIRMAN SKILLMAN: John --

1 (Simultaneous speaking)

2 CHAIRMAN SKILLMAN: We're interested in

3 that because steps that you take today, particularly

4 preservation steps that you take today, have some real

5 long implications.

6 MR. CARLIN: One of the things that, and I

7 appreciate that question for a number of different

8 levels. We've really been focused on making

9 improvements to Sequoyah that are long-term,

10 sustainable improvements.

11 We have made major modifications to our

12 switchyards, to our electrical systems. The

13 implementation of the Appendix R mods at Sequoyah was

14 much more extensive than most places.

15 We replaced miles of cable with the idea of

16 preparing for a long-term. Our focus on how we're

17 managing drainage and how we're managing our up cable

18 tunnels were all set up for long-term.

19 So while we have not embarked on the 60 year

20 plus initiative, our preparations have always focused

21 on that. Same thing goes with coatings.

22 Going in and looking with protective

23 coatings, long-term strategies in terms of digital

24 replacement, all of those things are focused on a

25 long-term traffic for rad monitors for other, equal 21,

1 other systems that we have in the plant, our rot control
2 systems.
3 All of those things are all focused with a
4 long-term view, with the long view. It isn't just to
5 get to the period of extended operation, but it is a
6 much longer view.
7 And I think the Tennessee Valley Authority
8 has made a commitment to nuclear. I mean it is a big
9 part of our, we've increased it. We have shut down a
10 number of our cold plants.
11 So strategically, the 60 year plus
12 initiative will really be brought to the floor sooner
13 than later. Our Unit 1 at Browns Ferry just entered
14 the period of extended operation.
15 And then obviously we'll be in that situation
16 right around 2020 time frame. So again, we have a
17 strong corporate commitment to nuclear, and we're going
18 to do that.
19 So concrete management, impact the fluence,
20 looking at temperature impacts, those sorts of things,
21 and we're closely monitoring what they're doing at
22 Ginna in terms of their evaluation of the concrete
23 structures, looking at some of the challenges.
24 We're looking forward to seeing what comes
25 out of that. So the answer, the long answer is we don't

1 have a formal program for beyond 60, but we're making
2 efforts. And our view is a long view of 40 years more
3 of operation.
4 CHAIRMAN SKILLMAN: Thank you. Okay.
5 MR. SCHULTZ: Let me back up to Dennis.
6 John, you made some good comments about the physical
7 improvements that you've made to the facility. And
8 then you mentioned 2020.
9 As the Chairman has indicated, that's in the
10 future, but it's not very far away. And my reaction
11 is somewhat affected by the choice of the word initiated
12 informal OE review.
13 And Dennis you brought up the issues
14 associated here about how we would move forward with
15 the overall aging management program, all of which is
16 very important.
17 So I think you're in the right place. But
18 when you make a major improvement to facility, one of
19 the cultural aspects of that is well, we've done it.
20 We've made these improvements. And now
21 we've got license renewal, and we're all set to go. We
22 don't have to worry about these things.
23 And the cultural aspect is very important to
24 make sure that the folks are all moving forward to
25 identify what needs to be done next in terms of aging

1 management. And it is a continuous process.

2 MR. CARLIN: I appreciate your challenge,

3 Dr. Schultz, about the cultural impact. It is.

4 Having led a plant through the period of, into the

5 period of extended operation, the first BWR to do it.

6 MR. SCHULTZ: At Browns Ferry.

7 MR. CARLIN: No, at the PWR was Ginna.

8 MR. SCHULTZ: Oh, Ginna.

9 MR. CARLIN: So I was the site vice president

10 of Ginna and setting up your programs, making sure

11 they're robust and long-term, also changing the mindset

12 of people because if you entered that period of extended

13 operation, the paradigm shifts.

14 There are new tests that have to be run.

15 There's a different way of viewing things from an aging

16 management perspective, and that is a big part of what

17 we'll be doing subsequent to this meeting, is

18 continuing down that path.

19 We started a journey in 2010. But we won't

20 finish it in 2020. It will go for the life of the plant,

21 and it really does require a different way of thinking

22 about the plant on the other side of that.

23 But you've got to set that table early

24 because it is a cultural shift. You can modify

25 behaviors, but you won't change the culture unless you

1 practice it before then.

2 MR. SCHULTZ: Thank you. I appreciate you

3 putting that on the record. Thank you.

4 CHAIRMAN SKILLMAN: Thank you, John.

5 Dennis, please proceed.

6 MR. DIMOPOULOS: Okay. We're on Slide 22

7 here. So the Safety Evaluation Report contains one

8 open item. Michael Henderson is going to talk about

9 that in the next slide.

10 It contains no confirmatory items and

11 contains two license conditions, and there are the

12 standard license conditions. One is to include the

13 FSAR supplement in the next update.

14 And the next one is to ensure implement our

15 new programs and enhancements six months prior to PEO.

16 So with that, I'd like to turn it over to Michael

17 Henderson who will talk about the SER open item.

18 MR. HENDERSON: Okay. Thanks, Dennis.

19 Good afternoon. I'm Michael Henderson, engineering

20 programs manager. As we've discussed, we do have one

21 open item in our safety evaluation report.

22 And that open item deals with the reactor

23 vessel internals program and specifically deals with

24 neutron fluence at the upper core plate.

25 So if we can jump to the next slide, we'll

1 kind of orient ourselves with the component we're
2 talking about.
3 The figure on the left is just the overall
4 schematic of our reactor vessel, and the upper core
5 plate is located just above the fuel region. It's
6 about a foot above the fuel.
7 And the figure on the right, it's just a
8 cutaway of the figure on the left. And the upper core
9 plate is in a red box there, so that's the component
10 we're talking about.
11 CHAIRMAN SKILLMAN: These are two different
12 reactor vessels, or those are not the same internal.
13 MR. HENDERSON: They're pictures taken from
14 two different locations. The one on the right is
15 supposed to be taking some of the objects out so you
16 can see the upper core plate.
17 But yes, all the components are not there.
18 They're not the same in the two figures, but the only
19 intent is to show location.
20 CHAIRMAN SKILLMAN: I understand the
21 cartoon, but I'm making the point what you have on the
22 left is an upper plenum. It's clamped by the head with
23 a lower bridge arrangement.
24 What you have on the right might be the same,
25 but that is a fundamentally different structural

1 member. I don't know if you can see it. I can see it.
2 MR. HENDERSON: Okay. The only intent was
3 to show --
4 CHAIRMAN SKILLMAN: Those are cartoons,
5 okay.
6 MR. HENDERSON: Yes, sir.
7 CHAIRMAN SKILLMAN: And the real point is
8 the upper core plate is that lower red member that
9 you're pointing to?
10 MR. HENDERSON: Correct.
11 CHAIRMAN SKILLMAN: Okay.
12 MR. HENDERSON: So going back to the
13 previous slide, we'll step through the open item
14 itself. So we received this RAI in September. We
15 responded on October 22nd, and that response is in
16 review.
17 The RAI really had two issues. The first was
18 to describe the fluence methodology that was used to
19 calculate the fluence at the upper core plate, and the
20 answer to that was pretty straightforward.
21 We used the same methodology that we've
22 always used. It's consistent with the reg guide, and
23 it's consistent with staff-approved methods that our
24 NSSS vendors use.
25 The second part of that RAI was really our

1 open item is the fact that the value we calculated for
2 the underside of the upper core plate is above a
3 threshold for a radiation embrittlement.
4 So the underside, obviously closer to the
5 fuel, more fluence. Now with that being said, being
6 above that threshold doesn't change the overall
7 categorization of the upper core plate.
8 It remains an expansion item with respect to
9 MRP guidance, and the reason for that is that it's still
10 not a leading indicator of any degradation within the
11 reactor vessel.
12 So with that being said, what Sequoyah has
13 done and what we are committing to doing is enhancing
14 our VT3 visual exam procedures so that when we do our
15 Section 11 inside the vessel visual exams, we'll take
16 a look at the underside of that upper core plate with
17 a VT3.
18 CHAIRMAN SKILLMAN: How do you do that?
19 MR. HENDERSON: Excuse me?
20 CHAIRMAN SKILLMAN: How do you do that?
21 That upper core plate is resting on the springs of the
22 fuel assemblers. It's clamped in place.
23 The head pushes it down, pushes the assembly
24 in place. The only way to see that is to pull that
25 plenum out and to view it from outside.

1 MR. HENDERSON: That would be the way to do
2 it, yes. It would only be when it's removed.
3 CHAIRMAN SKILLMAN: Okay.
4 MR. HENDERSON: It's not intended to be an
5 every outage type of commitment.
6 CHAIRMAN SKILLMAN: What does the program
7 require?
8 MR. HENDERSON: The ISI in-service
9 inspection program --
10 CHAIRMAN SKILLMAN: You're committing to a
11 visual for this particular open item. What is the
12 program that you are committing to?
13 MR. HENDERSON: As far as reactor vessel
14 internals, MRP 227. There are no requirements other
15 than an expansion item for this component. It would
16 only be examined if we found degradation elsewhere. So
17 this is more than what the MRP would require for this
18 item.
19 MR. SCHULTZ: What is the examination going
20 to look for?
21 MR. HENDERSON: The VT3 would be looking for
22 mechanical deformation, any sort of gross degradation
23 that may be present that could potentially serve as a
24 crack initiator. It will obviously not be looking for
25 cracking.

1 MEMBER BALLINGER: That concerns me a little
2 bit because if you're concerned about IASCC, which is
3 what the issue is, you can get, you don't have to see
4 distortion and stuff like that to have cracks.
5 I mean if you're looking for distortion or
6 whatever as a precursor or an indicator that you may
7 have cracks, that's not going to be enough. I mean you
8 can get cracks long before you get anything like that.
9 MR. HENDERSON: I'd like Randy Lott from our
10 NSSS vendor.
11 MR. LOTT: Hi. I'm Randy Lott. I'm from
12 Westinghouse, and we helped put together both this
13 response and the response to that triple core plate.
14 The answer to your question is there are
15 actually no cracking mechanisms that were screened in.
16 The threshold for radiation embrittlement is somewhat
17 lower than the threshold for IASCC within our screening
18 process.
19 So there was no fatigue. There was no IASCC
20 or SCC concern identified in the upper core plant.
21 There was in radiation embrittlement requirement.
22 MEMBER BALLINGER: So it's a toughness
23 issue?
24 MR. LOTT: So it's really, yes. So it's
25 really more a matter of how large a crack can you

1 tolerate or when you get to the actual slot analysis.
2 But in terms of what to inspect for, I agree
3 with you. We're inspecting only in an abundance of
4 caution to make sure that we're able to withstand any
5 loss of toughness in the material.
6 MEMBER BALLINGER: So how does the
7 inspection verify that?
8 MR. LOTT: Well, the inspection is just
9 verifying that there's not a flaw that would challenge
10 the toughness of the material.
11 MR. SCHULTZ: So what type of inspection are
12 you going to do --
13 (Simultaneous speaking)
14 MR. LOTT: The recommendation for that was
15 a VT3S. The upper internals are pulled out. That's
16 basically, as you said, that's the unit face to the
17 fuel. So to get to the fuel, that's got to come out.
18 It's either got to be examined in transition
19 or as it's sitting on the stand during the rest of the
20 exam. It's just simply a visual examination.
21 We believe because barely, the evaluation
22 we've gone through says that the threshold, the bottom
23 surface of this component might exceed the threshold
24 for a irradiation embrittlement.
25 But the other surface would be pulled, would

not have enough radiation to be embrittled. We do a scan, basically 1 DPA standard.

MEMBER BALLINGER: Yes, that's what I was just going to say. It's the 1 DPA standard.

MR. LOTT: Yes, that's basically, in fact it's 1.5 DPA for the things other than casting. But it's below that. That's what the screening criteria basically told us was it's below that 1 DPA level at the top surface.

So we're not worried about the things above it. That's a part of our concern.

CHAIRMAN SKILLMAN: So Dr. Ballinger, you good?

MEMBER BALLINGER: Yes.

CHAIRMAN SKILLMAN: Okay, Dennis, you can proceed. Excuse me, Mike.

MR. HENDERSON: I'll give it back to Dennis for some concluding remarks.

MR. DIMOPOULOS: We're on Slide 26. So in conclusion, the Sequoyah license renewal application has followed the latest revision of the NUREG, the latest revision of the GALL, with the only exception such that it with the fire water system.

In all there are 44 commitments that we're going to use to improve the aging management program

1 and the operating experience program that was
2 previously discussed.
3 During our application, the Sequoyah aging
4 management program owners and subject matter experts
5 have been involved with the development of the
6 application, the technical reports, the walk downs,
7 inspections, RAI responses and commitment development.
8 The programs and program enhancements are
9 defined for managing aging effects for Sequoyah for the
10 period of standard operation.
11 As John and Paul and William have discussed,
12 we made some significant investments to the plant
13 modifications over the years for the continuing safe,
14 reliable operation through the extended period of
15 operation.
16 So with that, we'll move on to questions and
17 comments.
18 MEMBER POWERS: It's always a curious
19 subject and interest to me. You made about a 40 percent
20 increase in the workload for aging management. How do
21 you do that? Go to the aging manager, and tell him
22 you're screwing up his weekends.
23 MR. SIMMONS: I would.
24 MEMBER POWERS: Me, too.
25 (Simultaneous speaking)

1 MR. SIMMONS: So as I understand your
2 question, Mr. Powers, is the workload associated with
3 the aging management, how are we prepared to deal with
4 that?
5 MEMBER POWERS: Yes.
6 MR. SIMMONS: So we have a very strong
7 management program at Sequoyah that integrates the
8 aging management process into those aspects of how
9 we're going about doing our preventative maintenance,
10 the other corrective actions, work activities that we
11 need to have.
12 One of the things that John and I do on a very
13 frequent basis is review our current stacking against
14 the work that we have, and we make adjustments as
15 required to accommodate for those needs based on the
16 workload that we have and we project that we'll have
17 over the next one to three years for that.
18 MEMBER POWERS: I've got to give you credit.
19 I ask this question pretty routinely of people, and
20 that's the best answer I've gotten.
21 I mean that's the right thing. You need more
22 people, you need more people. But that doesn't mean
23 that it's not proportional to the increase in workload
24 necessarily.
25 It may be more. It may be less. It depends

1 on what the nature of the job is.

2 CHAIRMAN SKILLMAN: I got a question, CRD

3 and nozzle wear. Got some interesting information in

4 the SER on this topic. Let me just read two sections

5 and then ask you to please respond.

6 In addition, the applicant stated that the

7 amount of wear, excuse me, this is from the status

8 report. No, it's the safety evaluation.

9 The applicant stated that with the amount of

10 wear, the remaining wall thickness of the CRD and

11 nozzles is sufficient to perform as designed function.

12 The applicant stated that all of the stress

13 intensity and fatigue usage factor limits used in the

14 design of the Unit 1, Unit 2 CRD and nozzles as specified

15 in the applicable ASME code editions remain satisfied

16 with the incorporation of the reduced CRD and nozzle

17 thickness.

18 The question is how has that thickness been

19 verified.

20 MR. PIERCE: Mr. Chairman, I'm going to ask

21 Mr. Adam Keyser to speak to your question.

22 CHAIRMAN SKILLMAN: Yes, sir. Thank you.

23 MR. KEYSER: Good afternoon. My name is

24 Adam Keyser. I'm the ASME Section 11 Program Manager.

25 This past outage on Unit 2 at Sequoyah back in the

1 spring, we were able to use our vendor and their NDE
2 techniques to take UT thickness measurements in those
3 locations.
4 CHAIRMAN SKILLMAN: Yes, sir. Thank you.
5 Let me ask one more, I think, if you want to stand by.
6 In response to thermal nozzles not located in the outer
7 two most concentric rows so on and so forth, the
8 applicant stated this inspection did not identify any
9 cracking with the thermal sleeves.
10 And Nozzles 20, 39, 40, 45, 47, 51, 53, 57
11 were noted as having the most wear. The applicant
12 further stated that the maximum wear was identified on
13 CRDM thermal sleeve Nozzle 20.
14 Here comes my question. In addition, the
15 applicant stated that its engineering evaluation
16 included a comparison of the observed wear of Unit 1
17 Nozzle 20 with the wear observed at another facility.
18 The applicant stated that the observed wear
19 of Nozzle 20 was less than the wear at the other
20 facility. And on this basis, the most significant
21 measured wear at the other facility was conservatively
22 used to evaluate the remaining service life of the
23 applicant's thermal sleeves.
24 I read that several times, and I said that
25 is an interesting way to do an evaluation. You find

1 somebody else who's worse than you, and you claim that
2 as the worst. And you march on. How is that
3 justified?
4 MR. KEYSER: The easy answer to that
5 question is since the time that examination was
6 performed, we have actually taken physical thickness
7 measurements.
8 The initial findings associated with the
9 technical bulletin were based on visual examination
10 results, and we didn't have a tool capable of physically
11 measuring the wear in this location.
12 So we utilized photographs taken during the
13 J-groove weld examinations performed at our plant and
14 compared them against photographs taken during the same
15 exam performed by the same vendor at the comparison
16 plant.
17 And at the time, that was the best data we
18 had to go on. Since then we have performed UT thickness
19 measurements.
20 CHAIRMAN SKILLMAN: Thank you.
21 MEMBER BALLINGER: I have another question.
22 Reading through the SER, the section on materials,
23 there were a number of cases where you thought one
24 material was there, but it was a different material when
25 you actually looked at it.

1 Are you sure that you have a direct
2 correlation? You know what materials you actually
3 have of the core structural materials, because that was
4 the issue between cast and rot materials in a number
5 of places. So you're sure now of the materials that
6 are present?
7 MR. SIMMONS: Mr. Ballinger, I'm going to
8 request that Mr. Chris Webb speak to your question.
9 MR. WEBB: Hi. I'm Chris Webb with
10 engineering programs. I understand you're asking
11 about the reactor vessel internals components --
12 MEMBER BALLINGER: Right.
13 MR. WEBB: -- that were originally
14 identified as rot --
15 (Simultaneous speaking)
16 MR. WEBB: Based on a review of CMTRs we
17 conservatively assume that they were cast also mixed
18 in with steel. We could not verify that they were one
19 or the other, so we conservatively assumed that they
20 were.
21 And that started with the CRGT byparts. And
22 we've since identified three other components and also
23 from that category, and that's the final number.
24 MEMBER BALLINGER: Okay. So when you make
25 the substance that's cast, that means you get earlier

1 embrittlement or aging.

2 MR. WEBB: Correct.

3 MEMBER BALLINGER: And so you factor that

4 in, okay. So where you couldn't determine, you've

5 assumed the worst case?

6 MR. WEBB: Correct.

7 CHAIRMAN SKILLMAN: Ron, thank you.

8 MR. SCHULTZ: I have a couple of questions.

9 CHAIRMAN SKILLMAN: Steve.

10 MR. SCHULTZ: First for you Mike, the

11 question I have is, and you may have covered this, and

12 I might have missed it, you talked about the inspection

13 program related to the open item.

14 But what is the earliest commitment date for

15 that inspection, and is it going to be a continuing

16 process? You said well, we don't have to do this all

17 the time. But is there a program plan that will

18 reevaluate, reinspect during the extension period?

19 MR. HENDERSON: You're referring to the VT3

20 exam --

21 MR. SCHULTZ: Yes.

22 MR. HENDERSON: -- that we will be doing.

23 MR. SCHULTZ: When is it going to be done?

24 MR. HENDERSON: It's going to be consistent

25 with the ten year ISI schedule.

1 MR. SCHULTZ: Okay.
2 MR. HENDERSON: So it'll be on that same
3 frequency.
4 MR. SCHULTZ: And when will that happen
5 first?
6 MR. HENDERSON: I don't have the exact date,
7 but I can get you the date when it'll happen first.
8 MR. SCHULTZ: Okay. Thank you. I
9 appreciate it.
10 MEMBER BALLINGER: I guess I have another
11 sort of companion question. That's a complicated
12 structure, a lot of holes and all kinds of things.
13 Are you sure that the VT3 would find what
14 you're looking for? It's not a flat plate that's easy
15 to get access to. It's a complex part, so have you done
16 anything to verify that the VT3 would actually work?
17 MR. HENDERSON: To this point, no. Again,
18 the VT3 would be above what's required by the MRP. It's
19 still an expansion item in the MRP document.
20 MR. SCHULTZ: And my other question is for
21 you, Erin. You mentioned in your presentation, and we
22 learned it was in 2012 that you had the industry peer
23 review done.
24 And it was also mentioned that there were 300
25 open items, 300 items that were identified, and I

1 presume they became open items in some list.
2 Were all of those elements, items closed
3 before the submittal, or how have those items been
4 tracked as you've gone forward with the application and
5 then with the subsequent interaction with the staff,
6 the industried items.
7 MS. HENDERSON: Dennis Lundy will talk a
8 little bit about that.
9 MR. LUNDY: My name is Dennis Lundy with the
10 license renewal project. Each one of those open items
11 were tracked in a database with an assigned owner.
12 Entergy, our primary contractor, put the
13 database together. Each individual question had a
14 defined answer that TVA reviewed and concurred with.
15 So they were tracked to closure. They were all closed
16 before it was submitted.
17 MR. SCHULTZ: Thank you.
18 MEMBER STETKAR: I apologize for coming in
19 late, so I hope, I don't think any of this was covered
20 beforehand. Somebody talk to me about underground
21 cables. So get your appropriate person ready.
22 Sequoyah's had a long history of problems
23 with water accumulation underground, buried in
24 underground, I'm going to need both of those because
25 I'm not quite sure what configurations you have, both

1 actual functional failures and cables and degraded
2 cables identified by testing.
3 As I read through the RAI responses and the
4 SER, first of all, because my last data comes from the
5 generic letter 2007 of one response. The last failure
6 I know about was in 2005.
7 What's your operating experience been from
8 2005 through 2014 in terms of underground cables? Have
9 you had any additional failures?
10 MR. DIMOPOULOS: Mr. Stetkar, I'm going to
11 ask Darren Boehm from our electrical design
12 organization answer that.
13 MR. BOEHM: Yes, my name is Darren Boehm from
14 site engineering. You were asking about failures post
15 the response to the generic letter 2007.
16 MEMBER STETKAR: That's the first question,
17 yes.
18 MR. BOEHM: We have had a test failure on a
19 diesel generator cable feed. I can get the exact date
20 on that.
21 MEMBER STETKAR: That date, I don't care.
22 MR. BOEHM: And we've also had one more
23 failure on a cooling tire lip pump cable. I think that
24 was approximately 2011.
25 MEMBER STETKAR: It was found by, how'd you

1 find it, water draining?

2 MR. BOEHM: That was a VLF test, very low

3 frequency.

4 MEMBER STETKAR: Water draining or the --

5 MR. BOEHM: We did not send that test away

6 for sampling, but we were seeing the indication of a

7 strong voltage dependence.

8 MEMBER STETKAR: Okay. In at least the SER

9 it notes that you'd had problems with, it identifies

10 Manhole 31, wherever that is.

11 And you were going to complete some regrading

12 of the surface to try to get, reduce the amount of water

13 intrusive of that manhole.

14 It was supposed to be completed by the end

15 of September of this year. Did you finish it?

16 MR. BOEHM: Yes, we have.

17 MEMBER STETKAR: Good, excellent. You've

18 also had problems, apparently, with sump pumps not

19 working and piping problems with the sump pumps. And

20 I guess you're on track for September of next year to

21 get those corrected. How are you doing there?

22 MR. BOEHM: I believe we have resolved that

23 commitment with preparing all of these acceptable sump

24 pumps and discharge pipe, safety-related manholes.

25 MEMBER STETKAR: When was your last

1 inspection to look for water accumulation?

2 MR. BOEHM: It's past on a four week PM. I

3 do not have the most recent, but as of September all

4 of our safety-related manholes were at acceptable

5 levels except for one, which is still documented in our

6 corrective action program.

7 We're still trying to resolve the issues with

8 that. That was in the scope of, we have gone into that

9 manhole, and apparently we didn't resolve the issue

10 fully. It's still in process to repair that one

11 remaining manhole.

12 MEMBER STETKAR: I came on the committee in

13 2007. We were talking about this issue in 2007. It's

14 seven years, not at Sequoyah but the industry in general

15 has been, it's just surprising that we're still talking

16 about it to this extent where you still have problems

17 in late 2014. I'll just make that as a comment.

18 MR. SIMMONS: Mr. Stetkar, I will comment on

19 that. Our standard at Sequoyah is we don't want any

20 water in our manholes, and that's what we're driving

21 to.

22 And we have put forth a lot of effort over

23 the last couple of years in regrading areas of our plant

24 to improve our drainage.

25 As Mr. Boehm spoke to, we have repaired,

1 replaced numerous sump pumps and addressed piping
2 issues. We do have one issue that he spoke to that
3 we're not satisfied with the current inspections that
4 we were seeing.
5 And we are taking action with our maintenance
6 organization to go and resolve that. And we're not
7 going to accept that for our plant.
8 MEMBER STETKAR: Yes, I understand the
9 commitments that you've made in terms of license
10 renewal. You're committing to all of the things in
11 GALL rev 2.
12 So I get that. I'm just trying to understand
13 where you are, where you've been in the past, where you
14 are now and develop some sort of confidence going
15 forward.
16 MR. CARLIN: Going back to Dr. Schultz's
17 comment, this is one of those, and the question was
18 posed by Mr. Skillman, we're committed to the long haul
19 on this.
20 And this isn't, so we need to fully resolve
21 this issue. We've had, we fully and readily admit that
22 we have not been good stewards at different times of
23 that.
24 We have invested millions of dollars to
25 ensure that degrading, that our drainage systems are

1 fully functional.

2 And we have made modifications to our cable

3 bolts to ensure that we can access them and quickly pump

4 any water that's discovered in them if we have sump pump

5 failures or something like that and also provide better

6 capability in terms of determining the level in those

7 at any time.

8 So we're continuing to invest, but it's set

9 up for the long haul. This is not just, you know, we're

10 just worrying about getting the sump pumps replaced and

11 saying okay, we've got a checkmark in a box. That

12 wasn't how we were going to approach this at all.

13 MEMBER STETKAR: And did I hear, you said

14 it's on a four week PM? You're --

15 (Simultaneous speaking)

16 MR. CARLIN: You're absolutely correct.

17 We're going to aggressive stewards going forward.

18 MEMBER STETKAR: Thank you.

19 CHAIRMAN SKILLMAN: Dr. Riccardella has

20 joined us. Pete, welcome. Colleagues, Dr. Ryan, any

21 questions for the TVA team?

22 MEMBER RAY: No.

23 CHAIRMAN SKILLMAN: Dr. Powers?

24 MEMBER POWERS: No.

25 CHAIRMAN SKILLMAN: Harold?

1 MEMBER RAY: No.

2 CHAIRMAN SKILLMAN: John, any further

3 comments?

4 MEMBER STETKAR: No.

5 CHAIRMAN SKILLMAN: Steve?

6 MR. SCHULTZ: No.

7 CHAIRMAN SKILLMAN: TVA team, thank you very

8 much. What we're going to do is take a 15 minute break,

9 and then we're going to call the NRC staff to the table.

10 (Whereupon, the above-entitled matter

11 went off the record at 2:24 p.m. and resumed at 2:41

12 p.m.)

13 CHAIRMAN SKILLMAN: Ladies and gentlemen,

14 we are back in session, and before we begin the NRC

15 presentation, I'm going to call upon Allen Henderson,

16 I'm sorry, Michael Henderson to speak into the record

17 the issue of the plan for inspection for the upper core

18 plate, please.

19 MR. HENDERSON: The question was when is the

20 next ten year ISI for Sequoyah Unit 1 and Unit 2. That

21 next ten year ISI is in 2015, and we plan to do that

22 inspection at that time.

23 CHAIRMAN SKILLMAN: Thank you.

24 MR. HENDERSON: Thank you.

25 CHAIRMAN SKILLMAN: With that, I'm going to

1 call on Manny Sayoc of the NRC staff to take the meeting
2 from here, please. Manny, go ahead.
3 MR. SAYOC: Good afternoon, Chairman
4 skillman and members of the license renewal
5 subcommittee. My name is Emmanuel Sayoc, and I am --
6 MALE PARTICIPANT: Chris wants to make sure
7 --
8 MR. SAYOC: Chris, I'm sorry.
9 CHAIRMAN SKILLMAN: We are now calling upon
10 Chris Miller.
11 (Off record comments)
12 CHAIRMAN SKILLMAN: We're going to call upon
13 Chris Miller to make some opening comments.
14 MR. MILLER: Thank you, Chairman. We are
15 pleased to be presenting before you. A lot of work went
16 into this application review. What we hope to cover
17 this afternoon is the staff's review.
18 As I said earlier, the SER with open items
19 was issued September 20, 2014, transmitted via memo to
20 the ACRS on October 9th. I want to introduce Mr. Manny
21 Sayoc who's our technical lead PM for the safety side
22 of the review.
23 He is also joined by Lindsay Robinson who is
24 also our project manager on safety and Dr. Allen Hiser.
25 And behind me, if they would stand up, a lot of people

1 who worked on this and did a lot of work.
2 And they're supporting us today, so I just
3 want to let you know who's here. Thank you, and I'll
4 turn it over to Manny.
5 MR. SAYOC: Thank you, Chris. I didn't mean
6 to steal your thunder. Okay, so good afternoon
7 Chairman Skillman and members of the license renewal
8 subcommittee.
9 My name is Emmanuel Sayoc, and I'm the
10 license renewal project manager for the Sequoyah
11 Nuclear Power Plant Units 1 and 2, ISS renewal safety
12 review.
13 We are here today to discuss the review of
14 the Sequoyah license renewal application as documented
15 in the safety evaluation report with open items, which
16 we issued on September 29, 2014.
17 Joining me here at the table, as you said,
18 is Dr. Allen Hiser. He's a technical advisor for the
19 division of license renewal, and Ms. Lindsay Robinson,
20 visual license renewal safety project manager, who will
21 be running the slides.
22 Seated in the audience are members of the
23 technical staff who have participated in a review of
24 the license renewal application and/or worked parts of
25 the audits conducted at the point.

1 Mr. Joel Rivera-Ortiz is our senior
2 inspector at Region II and is joining us via telephone.
3 Next slide.
4 Today we'll present a general overview of the
5 staff's review and then discuss the main sections and
6 issues presented in the staff safety evaluation report
7 as shown here.
8 Joel will present the results from the Region
9 II onsite inspection. Next slide. The staff
10 conducted several outside audits and inspections for
11 the application as shown on this slide.
12 During the scoping and screening methodology
13 audit, the audit team reviewed applicant's
14 administrative controls governing the scoping and
15 screening methodology and the technical basis for
16 selected scoping and screening results.
17 The staff also reviewed selected examples of
18 component material environmental combinations,
19 information contained in applicant's corrective action
20 relevant to the plant-specific age related degradation
21 and reviewed quality practices applied during
22 development of the LRA and the training of personnel
23 who participated in the review of the LRA.
24 During the aging management program audit,
25 a team of over 35 reviewers examined Tennessee Valley

1 Authority or TVA's aging management programs and
2 related documentation to verify applicant's claims of
3 consistency with the corresponding AMPs in the GALL
4 report.
5 The staff will use AMPs and documented the
6 results in the report dated June 12, 2014. Next slide.
7 Region II conducted its regional inspection
8 as shown a slide Joel will be presenting. We'll
9 present the inspection results shortly.
10 In addition to the audits and inspections
11 already mentioned, the staff conducted in depth
12 technical reviews and issued requests for additional
13 information or RAIs.
14 The staff completed its initial review of the
15 safety Sequoyah license renewal application with the
16 exception of one open item and issued in a safety
17 evaluation report with open items on September 29,
18 2014.
19 The staff will continue to review the open
20 item and associated outstanding RAI. Our plan is to
21 issue Sequoyah's final SER in January 2015. Now I'll
22 turn the presentation over to Joel of Region II.
23 MR. SCHULTZ: Manny, before you leave that,
24 I wanted to make sure. It looks like you had the Region
25 II inspection, and I just wanted to understand in those

1 inspections what was the participation?

2 That is, you have the Unit 1 containment

3 walkdown. That was just Unit 2, excuse me, Region II

4 personnel that participated in that? You have a team

5 inspection listed after that.

6 Any headquarters' staff participate in

7 either of those?

8 MR. SAYOC: Yes, sir. Mr. Schultz, thank

9 you for the question. For Region II, that was

10 primarily region personnel. Headquarters' staff

11 participated in any scoping and screening audit and the

12 aging management program audit.

13 MR. SCHULTZ: Okay. So that team

14 inspection was handled by Region II?

15 MR. SAYOC: Yes, sir.

16 MR. SCHULTZ: Thank you.

17 MR. SAYOC: Okay. I think we were about to

18 call Joel on the line here to go over the Region II

19 inspections. Joel.

20 MR. RIVERA-ORTIZ: Thank you, Manny. Good

21 afternoon, Chairman Skillman and members of the

22 subcommittee. We are on Slide Number 5 of the

23 presentation.

24 My name is Joel Rivera. I'm a senior reactor

25 inspector in Region II and a team leader for the license

1 general inspection of Sequoyah. This inspection was
2 conducted last year in accordance with NRC inspection
3 procedure 710002.
4 We completed an inspection in two places, and
5 to clarify the previous question asked about the
6 composition of the teams.
7 We conducted a walkdown of the Unit 1
8 containment performed by Region II inspection staff
9 including the October 2013 refueling outage because
10 that was the only opportunity available around that
11 time to inspect the containment because they were on
12 refueling outage.
13 And after the outage was completed, we
14 conducted a team inspection in November of 2013. The
15 team consisted of five inspectors from Region II and
16 one materials engineer from NRR.
17 So to answer the previous question, there was
18 one member from NRR participating in the inspection.
19 The team conducting inspection activities in the three
20 specific areas shown on the slides as directed by the
21 inspection procedure.
22 For the inspection of scoping and screening
23 methodology, the teams selected the essential raw
24 cooling water system to verify on a sampling basis that
25 the system was scoped and the applicable aging

1 management reviews were performed in accordance with
2 Part 54.
3 The team also interviewed plant personnel
4 and conducted walkdowns on portions of the system to
5 verify that scoping and screening results were
6 consistent with the application.
7 For the inspection of aging management
8 programs, the teams selected all programs described in
9 the application. The team interviewed plant
10 personnel, reviewed program implementing procedures
11 and samples of inspection, testing and surveillance
12 results to assess the implementation of existing
13 programs.
14 Additionally, the team conducted walkdowns
15 of plant areas to assess of existing programs, based
16 on the current material conditions and verify that
17 applicable aging effects had been accurately
18 identified in the application.
19 The team discussed with the applicant their
20 planned activities to enhance and develop new programs
21 and the evaluation of industry operating experience
22 used to prepare the application.
23 And last, for the review of updates to the
24 application and open items, the team discussed with the
25 applicant any potential material changes to the

application, such as planned modifications or changes to the current licensing basis, verify that the applicant was planning to revise the application in accordance with Part 51.

Prior to a team inspection, the team consulted with NRR to identify any items of interest that require further inspection. And last, the team verified that official administrative controls were in place to ensure that commitment tasks were being tracked to completion prior to the period of extended operation. Next slide, please.

Part of the conclusions of the inspection, on the basis of the sample selected for review, the team concluded that the applicant performed aging management reviews in accordance with Part 54.

Based on the sample of plant areas visually inspected and the review of program documents, the team concluded that the existing programs were being effective in managing aging effects for plant structures and equipment within the scope of license renewal.

The plant walkdowns show that structures, systems and components were being maintained in good condition and aging effects were being identified, monitored and corrected to maintain the system

1 functions.

2 The team confirmed that the applicant had

3 plans to implement the enhancements described in the

4 applications and develop new aging management programs

5 in accordance with the applications and the

6 commitments.

7 Additionally, the team confirmed that the

8 information used to prepare the application was

9 retrievable, auditable and consistent with Part 54.

10 The team finally determined that the

11 proposed aging management programs, when implemented

12 in accordance with the application, the regulatory

13 commitment and applicable quality assurance measures

14 will provide regional assurance that the aging facts

15 will be managed to maintain the function of applicable

16 structures, system and components. That concludes my

17 part of the presentation.

18 CHAIRMAN SKILLMAN: Joel, this is Dick

19 Skillman. I have one question I would like to ask,

20 please. Can you hear me?

21 MR. RIVERA-ORTIZ: Yes, I can hear you

22 clearly.

23 CHAIRMAN SKILLMAN: I would like to know the

24 basis upon which you would conclude that inspecting

25 just the essential raw cooling water system is

1 sufficient.

2 I'm going to guess that Sequoyah's got 200

3 and some systems of those. There are probably 35 or

4 40 that are critical systems. You've chosen just one

5 of the critical systems, and I'm curious why one is

6 sufficient, please.

7 MR. RIVERA-ORTIZ: Okay. Well, we selected

8 the, when we are putting inspection plans together we

9 wanted to select a comprehensive, a large system that

10 covers multiple areas of the plant and interfaces with

11 multiple components.

12 And that's why we selected the essential raw

13 cooling water system. In addition to that, we wanted

14 to use risk insights to select a system that was

15 significant in risk for plant safety.

16 And we used that. We believe that the

17 essential raw cooling water was a good sample,

18 representative of the methodology that the licensee

19 used for similar systems for system insight.

20 CHAIRMAN SKILLMAN: Thank you, Joel. I

21 appreciate the answer. Thank you.

22 MR. SCHULTZ: Joel, this is Steve Schultz.

23 Thank you for your presentation. Two questions, both

24 related. You did the walkdown of the containment for

25 Unit 1 during the refueling outage in 2013 and then had

1 a subsequent inspection of November.
2 I presume that the team inspection looked at
3 both units.
4 MR. RIVERA-ORTIZ: Yes, that's correct.
5 The scope of inspection, the team inspection in
6 November was a programmatic, was a review of the
7 programs. And we look at both units.
8 MR. SCHULTZ: Okay. And was there anything
9 identified in the containment walkdown for Unit 1 that
10 would suggest that you would like to perform a similar
11 walkdown for Unit 2 in the upcoming outage?
12 MR. RIVERA-ORTIZ: At the time of that
13 walkdown, I don't recollect of any significant issues
14 that require a walkdown in the other unit.
15 In addition to that, we routinely walkdown
16 the containment during the baseline inspection program
17 that we implement.
18 MR. SCHULTZ: Right.
19 MR. RIVERA-ORTIZ: So at that time we didn't
20 identify any significant in regions that required a
21 similar walkdown in the Unit 2.
22 MR. SCHULTZ: And you had the ability
23 matched up with the traditional walkdowns that you do
24 during outages.
25 MR. RIVERA-ORTIZ: Yes.

1 MR. SCHULTZ: Thank you.

2 CHAIRMAN SKILLMAN: Joel, Dick Skillman, I
3 have one more question, please. You mentioned that as
4 you were preparing for this inspection, you asked
5 headquarters if there were any areas that headquarters
6 would like you to inspect.

7 MR. RIVERA-ORTIZ: That's correct.

8 CHAIRMAN SKILLMAN: What were those areas,
9 please?

10 MR. RIVERA-ORTIZ: It was one particular
11 item that the NRR asked us to take a second look at.
12 And there was an indication on a concrete wall in the
13 turbine building that the technical reviewers wanted
14 the region's opinion on the licensee's actions to
15 manage aging of that turbine building wall.

16 CHAIRMAN SKILLMAN: And what did you find in
17 that inspection, please?

18 MR. RIVERA-ORTIZ: The assessment of one of
19 the civil engineers in the group was that the condition
20 had been identified and been monitored and it did not
21 impact the structural integrity of the wall in the
22 turbine building.

23 And licensee had been monitoring the
24 condition, and in addition to that, had been well
25 capturing the request for additional information from

1 the staff.

2 And my understanding is that the licensee has

3 a specific commitment to take additional actions prior

4 to pure start up operation to address that condition.

5 CHAIRMAN SKILLMAN: Thank you, Joel. Thank

6 you.

7 MR. RIVERA-ORTIZ: You're welcome.

8 MEMBER STETKAR: Joel, this is John Stetkar.

9 I had to keep you on the hook here, but it's the price

10 you pay. You guys walked down the ERCW system, right?

11 MR. RIVERA-ORTIZ: That's correct.

12 MEMBER STETKAR: And I noticed the buried

13 and underground piping and tanks inspection program is

14 characterized as a new program for Sequoyah.

15 And as is sometimes the case on these new

16 program, when they look at operating experience they

17 say well, this is a new program. We don't have the

18 operating experience that's relevant to a new program.

19 Well, okay, but the plant has been operating

20 now for quite some number of years. What was the

21 condition, and I don't know the configuration? Could

22 you actually look at, is there ERCW piping, is it

23 underground, or is buried?

24 MR. RIVERA-ORTIZ: For this, the --

25 MEMBER STETKAR: Both?

1 MR. RIVERA-ORTIZ: -- good expand of the
2 piping is buried.
3 MEMBER STETKAR: Is buried, below? Do you
4 know if they had any, did you come across when you were
5 there at the site any experience of leakage of problems
6 with that piping?
7 MR. RIVERA-ORTIZ: No, the result of the
8 walkdown identified that at least the accessible
9 conditions were well maintained. There was no
10 observable leakage from the components.
11 We did a walkdown from ERCW, essential raw
12 cooling water pumping station, all the way to a number
13 of heat exchangers and components. And we didn't
14 identify any active leaks in those components.
15 In our walkdown we talked to system
16 engineers. They discussed with us, he was very
17 knowledgeable, history of the system.
18 And that operating experience had been
19 captured in the operating experience review for the
20 system and the program. So to answer your question,
21 we did not see any active leakage in our walkdown of
22 the areas that we sampled.
23 MEMBER STETKAR: Good, and no evidence of
24 significant adverse operating experience when you
25 talked to the systems engineer?

1 MR. RIVERA-ORTIZ: No, that's our
2 understanding.
3 MEMBER STETKAR: Yes, great. Thank you.
4 CHAIRMAN SKILLMAN: Joel, I would be remiss
5 if I didn't convey a compliment to you and your
6 inspection team. Several of the members used your
7 inspection report as significant basis for their review
8 and found your report to be very well done, very
9 thorough and extremely helpful in preparation for this
10 engagement with the licensee. So, thank you.
11 MR. RIVERA-ORTIZ: I appreciate that
12 comment. Thank you.
13 MR. SAYOC: Okay, Emmanuel Sayoc, I'll
14 continue the presentation. Thank you, Joel. Now
15 let's move to Section 3: The Aging Management Review
16 Results.
17 Section 3.0 covers the staff's review of the
18 applicant's aging management programs. Section 3.1 to
19 3.6 covers aging management review items in each of the
20 general system areas within the scope of license
21 renewal.
22 For a given aging management review, the
23 staff reviewed the items to determine whether it was
24 consistent with the GALL report. If an aging
25 management review was not consistent with the GALL

1 report, the staff conducted a technical review to
2 ensure accuracy.
3 The one open item in the SER is related to
4 an aging management program in Section 3.0 and will be
5 discussed shortly. Next slide.
6 The applicant submitted 43 aging management
7 programs in the application, 31 of which are existing
8 and 12 of which are new. One plant-specific AMP was
9 provided.
10 All within the exception of the
11 plant-specific AMP were evaluated by the staff for
12 consistency with the GALL report.
13 On the basis of its review, the AMPs
14 evaluated against the GALL report, the staff concluded
15 that 17 were consistent, 24 were consistent with the
16 enhancements, one was consistent with enhancements and
17 exceptions and one was plant-specific.
18 Let's now cover the open item related to the
19 aging management programs. Next slide. The
20 applicant's PWR vessel internals program implements
21 the guidance provided by EPRI's material reliability
22 program, MRP 227A, entitled PWR Reactor Internal
23 Inspection and Evaluation Guideline, which is dated
24 January 9, 2012.
25 And it includes a plant's specific responses

1 to action items, conditions and limitations which were
2 identified in the staff's safety evaluation report or
3 MRP 227.
4 Staff safety evaluation identified a number
5 of applicant/action items that each applicant's team
6 was responsible to address related to its
7 plant-specific design and operating history.
8 MRP issued EPRI letter number MRP 2013-25
9 dated October 2013 in order to provide an applicant with
10 the basis for responding to applicant's RAIs on Action
11 Item 1 and a method that could be used to determine
12 whether the technical assumptions in MRP 227 would be
13 bound for the design operations for the reactor vessel
14 internal for components at the facilities.
15 The EPRI letter MRP 2013-25 stated that if
16 an applicant's units did not maintain a minimum
17 distance of 12.2 inches between the top of the active
18 fuel and the bottom of the surface of the upper core
19 plate for a period extending two effective full power
20 years, then applicants will be required to provide
21 additional evaluations to assure applicability of MRP
22 227A to its design and operating history.
23 In its response to Action Item 1, the
24 applicant stated that neither of its units meet the MRP
25 screening criteria.

1 That applicant stated that the maximum fast
2 neutron fluence for components above the upper core
3 plate is projected to be below the screening criteria
4 for irradiation embrittlement.
5 The staff noted that MRP 227A identifies an
6 irradiation assisted stress corrosing cracking or
7 IASCC and irradiation embrittlement, or IE, as aging
8 mechanisms that could employ Westinghouse designed
9 upper core plates.
10 The staff also noted the applicant's
11 response to RAI B.1.34-9 did not provide sufficient
12 information for the staff to review the applicant's
13 plant-specific evaluation.
14 Therefore, the staff issued follow up RAI
15 B.1.34-9A requesting the applicant to provide
16 additional information. Number 1, they were requested
17 to provide a brief description of the analysis and
18 methodology used to determine that projected fluence
19 after 60 years of operation will be below the threshold
20 limit.
21 Number 2, the neutron fluence values that are
22 used as the lower bound neutron fluence threshold for
23 IE at the core plate, and Number 3, the projected
24 neutron fluence values for the upper core plates
25 through 60 years of licensed operation for both units.

1 The applicant provided the response to
2 staff's RAI following issuance of the SER with open
3 items. The staff is currently reviewing the
4 information provided and applicant's response and
5 expects to complete its review and document its
6 findings in the final SER.
7 We will present these findings in the final,
8 I'm sorry, in the ACRS full committee. Okay, next
9 slide.
10 Now moving to SER Section 4, which covers
11 time limited aging analysis or TLAA, Section 4.1
12 documents the staff's evaluation of the applicant's
13 identification of applicable TLAAs.
14 The staff evaluated applicant's basis for
15 identifying those plant-specific or generic analysis
16 that needed to be identified as TLAAs and determine that
17 TVA has provided an accurate list of TLAAs as required
18 by 10 CFR 54.21C1.
19 Section 4.2 to 4.7 documented the staff's
20 review of the applicable Sequoyah TLAAs as shown.
21 Based on its review and the information provided by the
22 applicant, the staff concluded that the TLAAs will
23 Number 1, remain valid for the period of standard
24 operation to the TLAAs have been projected to the end
25 of the period of extended operation, or Number 3, the

1 effects of aging on those intended functions will be
2 adequately managed for the period of extended operation
3 as provided by 10 CFR 54.21 CI, II and III.
4 Next slide. The staff's conclusion will be
5 provided in a final safety evaluation report at the
6 conclusion of the staff's evaluations.
7 Pending satisfactory resolution of the open
8 item, the staff will be able to determine whether the
9 requirements of 10 CFR 54.29(a) will have been met for
10 the renewal of Sequoyah's Nuclear Power Plant's Units
11 1 and 2.
12 This concludes the staff presentation, and
13 now we'll be available to answer any further questions
14 from the subcommittee.
15 CHAIRMAN SKILLMAN: Thank you, Manny.
16 Colleagues, do any of you have a question for the NRC
17 staff? Pete.
18 MEMBER RICCARDELLA: On the open item,
19 you've received their response?
20 MR. SAYOC: Yes, sir. We received a
21 response in late October. I believe it was the last
22 week of October. The staff is currently reviewing
23 those responses.
24 MEMBER RICCARDELLA: And what are the --
25 (Simultaneous speaking)

1 MR. SAYOC: I'm sorry, the question was?
2 MEMBER RICCARDELLA: The responses that
3 they submitted.
4 MR. SAYOC: I'll call on our staff member to
5 supply that information. Roger Kalikian.
6 MR. KALIKIAN: This is Roger Kalikian from
7 the NRC staff. The fluence they estimated for the
8 upper core plate, so part of the upper core plate is
9 going to have, Slide 3 about the embrittlement special
10 which was, trying to figure out --
11 MR. HISER: Page 3, Roger.
12 MR. KALIKIAN: Oh, Page 3? Yes, I'm on Page
13 3. I'm just, it was going to be 1.87 times 10 to the
14 21 for Unit 1 and 1.82 times 10 to the 21 for Unit 2.
15 And that would've been above.
16 MEMBER BALLINGER: It's roughly 1 DPA.
17 MR. KALIKIAN: I'm sorry, yes.
18 MEMBER BALLINGER: Roughly 1 DPA, and the
19 limit is what? I thought I heard somebody say 0.5.
20 MR. KALIKIAN: I'm sorry.
21 MEMBER BALLINGER: I thought it was one, but
22 I thought I heard somebody saying it was 0.5 DPA was
23 the threshold.
24 MR. KALIKIAN: No, 0.5 wasn't part of the
25 answer. Maybe, I have to think that it wasn't, but I

1 think for that area that was the fluence threshold.
2 MEMBER BALLINGER: Is it 1.5 DPA?
3 (Simultaneous speaking)
4 MR. LOTT: The screening criteria --
5 CHAIRMAN SKILLMAN: Please identify
6 yourself.
7 MR. LOTT: Randy Lott, Westinghouse, the
8 screening criteria that was used in MRP 227A as far as
9 radiation embrittlement of rocks and steel was 1.5 DPA.
10 The values, I think, the question about the values of
11 what was used for casting is where the other values came
12 in.
13 MEMBER BALLINGER: I can do this. Once you
14 get a mental conversion between fluence and DPA, which
15 to me is 1 DPA, but the threshold is 1.5. So why are
16 we, it's not above the threshold.
17 MR. HISER: Actually, the 1.87 is equivalent
18 to about 1.2 or so DPA. I'm sorry, 2.5 DPA.
19 MEMBER BALLINGER: Oh, okay. So I'm off by
20 one digit. My conversion factor was not good enough.
21 MR. HISER: It's a little bit higher.
22 MEMBER BALLINGER: Okay.
23 MR. HISER: And also that was on the lower
24 surface of the upper core plate. At the top surface
25 it's a bit lower, 6.39 times 10 to the 20th, which is

1 just below 1 DPA, and then 6.22 for Unit 2.
2 MEMBER BALLINGER: Okay.
3 MEMBER RICCARDELLA: So is there an
4 evaluation that's going to be performed?
5 MR. HISER: Yes, the staff, as Manny said,
6 the staff will evaluate the response, and if we find
7 it acceptable we'll write it up in the final SER.
8 Otherwise, if we have any additional questions, we'll
9 go back to the applicant with RAIs.
10 MR. MILLER: Mr. Chairman, just as far as the
11 record goes, I'm not sure if any of that information
12 is proprietary, its fluence.
13 MALE PARTICIPANT: No, none of it is
14 proprietary.
15 MR. LOTT: Those numbers were in the
16 non-proprietary version.
17 MR. MILLER: Thank you.
18 CHAIRMAN SKILLMAN: Staff, thank you.
19 Pete, thank you. Any other questions? Again, around
20 the table. Any of the members, Thomas, Harold?
21 MEMBER RAY: No.
22 CHAIRMAN SKILLMAN: Ron?
23 MEMBER BALLINGER: No.
24 CHAIRMAN SKILLMAN: John?
25 MEMBER STETKAR: No.

1 CHAIRMAN SKILLMAN: Dr. Powers?
2 MEMBER POWERS: No.
3 CHAIRMAN SKILLMAN: Michael?
4 MEMBER RYAN: No.
5 CHAIRMAN SKILLMAN: On the bridge line, and
6 while we're waiting for the bridge line, does anyone
7 in the room have comments, please?
8 Everybody stand by. Let's make sure our
9 phone line is open, and we'll find out if there's
10 anybody out on the phone line that has comments or
11 questions.
12 OPERATOR: The line is open.
13 MEMBER STETKAR: For those of you who don't
14 participate, we'll square you away. This is one of the
15 highest technology we're ever doing.
16 CHAIRMAN SKILLMAN: If there's anyone out
17 there, could you please say something so we can confirm
18 that the line is open?
19 OPERATOR: The line is open.
20 CHAIRMAN SKILLMAN: Thank you. For those
21 who would be online, are there any questions or any
22 comments, please? I'll ask one more time. Any
23 questions or comments?
24 Hearing none, closing comments colleagues?
25 Any comments that you would have? Any questions you

1 would have? Let me first say thank you very much to
2 the NRC staff for your work, your presentation, for
3 getting us to this point.
4 Let me also thank the TVA team for all the
5 work that they have done to bring this presentation to
6 us and to give us a good briefing today. If there are
7 no more comments or questions, this meeting is
8 adjourned.
9 (Whereupon, the above-entitled matter
10 went off the record at 3:13 p.m.)
11
12
13
14
15
16
17
18
19
20
21
22
23
24
25

Sequoyah Nuclear Plant
ACRS Subcommittee Meeting

November 05, 2014

Agenda

• Introductions	John Carlin
• Plant History and Background	Paul Simmons
• Major Modifications and Near Term Plant Improvements	William Pierce
• License Renewal Application Project	Erin Henderson
• License Renewal Application Results	Dennis Dimopoulos
• Safety Evaluation Report Open Item	Mike Henderson
• Concluding Remarks	Dennis Dimopoulos

John Carlin
Site Vice President

Introductions

Representing Sequoyah Nuclear Plant

- Paul Simmons – Plant Manager
- William Pierce – Director, Site Engineering
- Dennis Dimopoulos – Manager, Engineering
- Michael Henderson – Manager, Engineering Programs
- Erin Henderson – Manager, Sequoyah Licensing

Personnel In Attendance

ISI Programs Adam Keyser/Jason Barrick	**Chemistry Programs** Bruce Vogel	**Reactor Vessel Programs** Chris Webb/Dave Lafever
Fire Protection/Appendix R David Sanders/Robert Egli Ed Turner/Joy Williams/Jim Grant	**Inaccessible Electrical Cable** Darren Boehm	**Steam Generators** Jeremy Mayo
Structures Monitoring Tyler Haraway	**Flow Accelerated Corrosion** David Spears	**Buried Piping** Kyle Loomis
Coatings Kelli Yates	**Fuels** **Fuels/Neutron Monitoring** David Brown	**Instrumentation Programs** Gary Tiner
Chemical Monitoring Harold Williams	**Service Water Program** Ed Craig	**Overhead Handling** Brookes Bacon
Fatigue Management Dennis Lundy	**LR Project Contractor** Alan Cox/Reza Ahrabli David Wootten/Roger Rucker	**Westinghouse-RVI** Randy Lott

Paul Simmons
Plant Manager

Plant History and Background

Sequoyah Nuclear Plant Site

Plant Overview

- Sequoyah Units 1 and 2 are located on 525 acres beside the Chickamauga Reservoir on the Tennessee River, approximately 18 miles northeast of the city center of Chattanooga, Tennessee
- Sequoyah supplies electricity to approximately 8.3 million people through 158 distributors in the TVA service area
- Sequoyah is a two unit Westinghouse 4-loop PWR
- Generator output for each Sequoyah unit is 1199 MWe for rated core power
- Each Sequoyah containment is a freestanding steel vessel with an ice condenser and separate reinforced concrete shield building
- Two natural draft cooling towers used in “helper” mode as required for NPDES limits
- 161-KV and 500-KV switchyards

Site Location

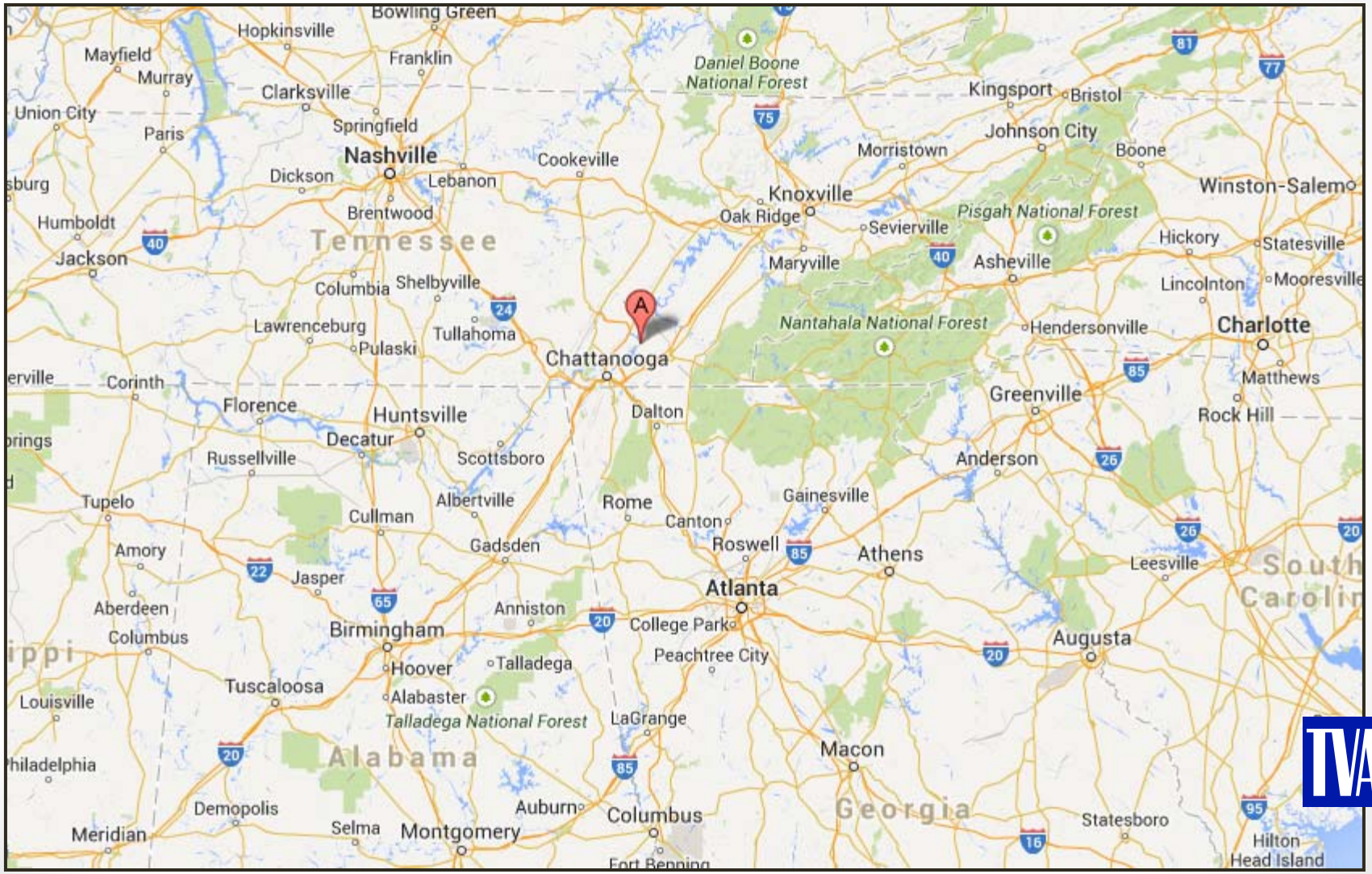

History and Background

- Construction Permit – May 1970
- Operating License
  - Unit 1 - September 17, 1980
  - Unit 2 - September 15, 1981
- Commercial Operation
  - Unit 1 - July 1, 1981
  - Unit 2 - June 1, 1982
- 1.3 % Measurement Uncertainty Recapture Uprate (44MWt)
  - Unit 1 and 2 - 2002
- Steam Generator Replacement
  - Unit 1 – 2003 / Unit 2 - 2013

Current Status

- Current Plant Status – November 5, 2014
  - INPO Index of 100% on both units (Top Quartile 97.5%)
  - Unit 1 - 97% Equipment Reliability Index
  - Unit 2 - 98% Equipment Reliability Index
- Next Refueling Outage
  - Unit 1 – Refueling Outage 20 – April 2015
  - Unit 2 – Refueling Outage 20 – November 2015

William Pierce
Engineering Director

Major Modifications and Near Term Improvements

Major Modifications Completed or In Progress

- Installed pressurizer PWSCC-resistant full strength weld overlays (U1-2007, U2-2006)
- Replaced portions of secondary side piping with FAC resistant material (began in 1990s and ongoing)
- Replaced steam generators (U1-2003; U2- 2013)
- Replaced main condenser tube bundles (titanium tubes; titanium clad tube sheets) – U2-1996, U1-1997
- Replaced portions of carbon steel service/raw water piping (2014)
- Replaced fire protection pumps/tanks and changed water source from raw water to potable water (1998)
- Replaced containment spray HX 1B (1998) and component cooling water HXs (1993)

Near Term/Future Plant Improvements

Refueling U1 Outage 20 (April 2015)

- Replacing ~10 thimble tubes
- Replacing containment spray heat exchanger 1A

Refueling U2 Outage 20 (November 2015)

- Replacing ~10 thimble tubes

2015 and 2016

- Replacing portions of carbon steel service/raw water piping
- Designing and begin installing cathodic protection (complete 2017)
- Replacing CRD and Auxiliary Building HVAC cooling coils

Erin Henderson
Licensing Manager

License Renewal Application Preparation

License Renewal Application – Project

- **Application Development**
  - LR Project Team assembled – 2010
  - Experienced Team selected
  - Sequoyah Program Owners and System Engineers – early and continuous involvement
  - Technical Documents (Reports/RAIs) review/concurrence by SMEs and Program Owners
  - Utilized reviews by industry experienced personnel
- **Industry Interaction**
  - NEI Working Group involvement (Contractor/TVA)
  - Industry peer review
  - Industry OE utilized in LRA development

Dennis Dimopoulos
Engineering Manager

License Renewal Application Results

License Renewal Application - Details

- **Application Details**
  - Submitted application January 7, 2013
  - Developed using NUREG-1801 (GALL) Rev 2
  - Followed scoping guidance of NEI 95-10 "*Industry Guideline for Implementing the Requirements of 10CFR54-The License Renewal Rule*" Rev 6
  - Conducted Aging Management Review (AMR) per NEI 95-10 and industry guidance documents
  - Addressed six License Renewal (LR) ISG documents in the LRA and two LR ISG documents in RAI responses
  - Completed ~4100 AMR line items
  - 43 AMPs (31 existing and 12 new) required to manage aging effects for the PEO

Aging Management Program (AMP) Summary

43 AMPs Credited

	Consistent with GALL	Consistent with Enhancement	Consistent with Enhancements and Exceptions	Plant Specific	Total
LRA	20	22	0	1	43
SER with Open Item	17	24	1	1	43

License Renewal Application (LRA) - Commitments

- **License Renewal Commitments**
  - Included in FSAR Supplement (Appendix A of LRA)
  - Managed by Sequoyah Commitment Tracking System and Corrective Action Program (CAP)
  - Total of 44 commitments
    - 43 associated with AMPs
    - 1 associated with the Operating Experience (OE) program

Implementation

- Participating in NEI LR Implementation Working Group
- Selected permanent Aging Management Coordinator
- Initiated informal OE review for impacts to AMPs in advance of revision to fleet procedural guidance
- Initiated work to address commitments
- Sequoyah AMP Owners will guide the implementation effort assisted by experienced implementation contractor

Safety Evaluation Report (SER) with Open Item

- Sequoyah SER contains one Open Item
- Sequoyah SER contains no confirmatory items
- Sequoyah SER contains two License Conditions
  - License Condition 1
    - Include 10 CFR 54.21 (d) UFSAR supplement in the next UFSAR update
    - Evaluate changes to UFSAR supplement per 10 CFR 50.59
  - License Condition 2
    - Implement new programs and enhancements six months prior to the PEO
    - Perform inspections and testing before the end of the last RFO prior to the PEO or six months prior to the PEO, whichever occurs later

Michael Henderson
Engineering Programs Manager

SER Open Item

SER – Open Item B.1.34-9c

RAI Request

- Provide description of the methodology used to project the 60 year fluence at the Reactor Vessel Internal (RVI) upper core plate (UCP)
- Provide the projected 60 year fluence at the UCP compared to the screening threshold fluence for Irradiation Embrittlement (IE)

Resolution

- Provided the methodology used for the fluence projections as well as the 60 year projected fluence at the bottom of the UCP
  - Neutron transport method meets RG 1.190
  - Methodology described in NRC approved WCAPs 14040-A and 16083-NP-A
- Provided the basis for the conclusion that MRP-227-A inspection protocols for RVIs remain valid for Sequoyah U1 and U2
- Responses prepared by the **PWROG** and approved by **TVA-SQN**

Status

- Response submitted

Reactor Vessel Internals - Upper Core Plate

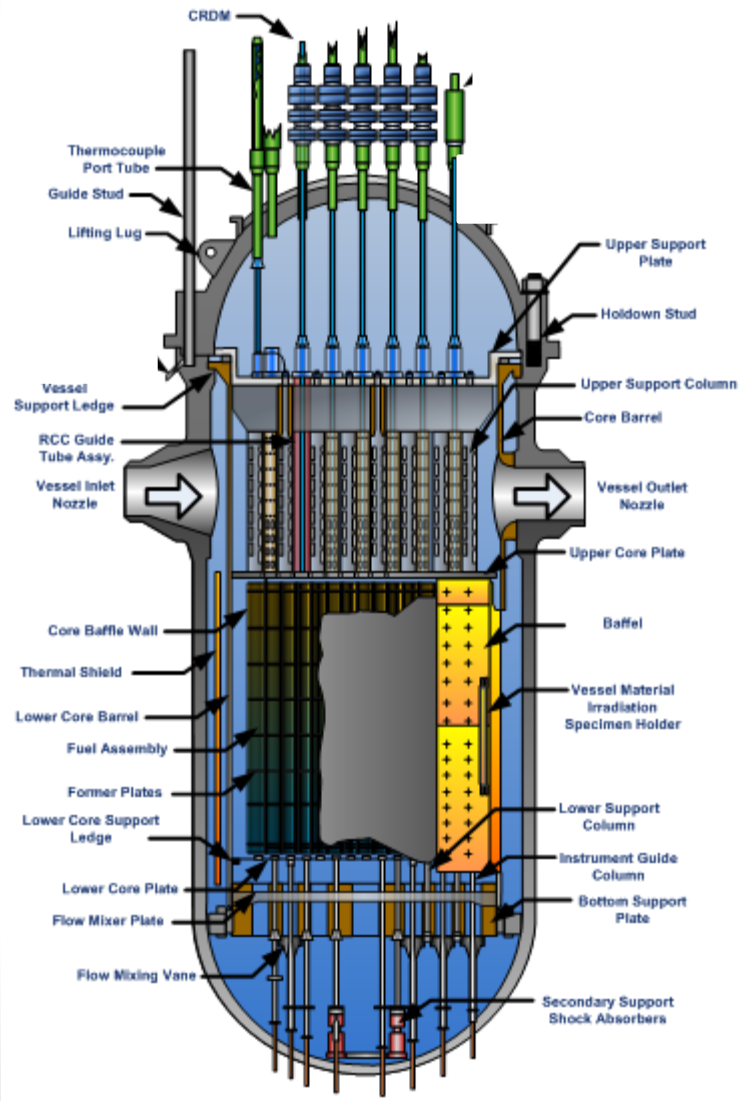

Upper Core Plate

The upper core plate sits below the control rod guide tubes and upper support columns and on top of the fuel assemblies to hold them into place.

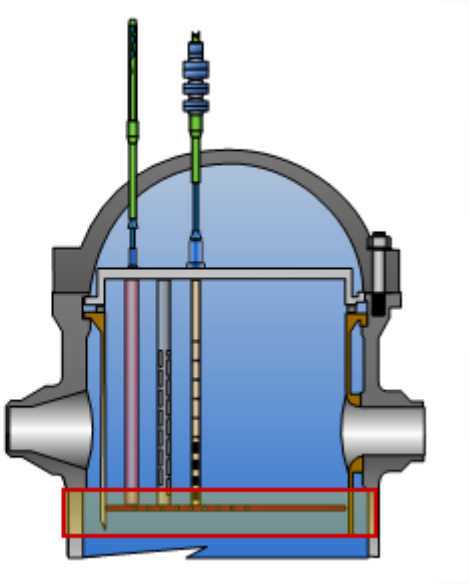

Concluding Remarks

- Sequoyah LRA based on NUREG-1801, Rev. 2 with exceptions only in the Fire Water Program for LR-ISG-2012-02
- 44 Commitments to improve existing AMPs, to implement new AMPs and to enhance the OE Program
- Sequoyah AMP Owners and SMEs involved in:
  - Development of the application, technical reports, audit & inspection interviews, RAI responses and commitment development
- Programs and program enhancements defined for managing aging effects at Sequoyah for the PEO
- Invested in plant modifications for continuing safe, reliable extended operation

Comments and Questions?

United States Nuclear Regulatory Commission

Protecting People and the Environment

Advisory Committee on Reactor Safeguards
License Renewal Subcommittee
Sequoyah Nuclear Plant, Units 1 and 2

Safety Evaluation Report (SER) with Open Items

November 5, 2014

Emmanuel Sayoc, Project Manager

Office of Nuclear Reactor Regulation

Presentation Outline

- Overview of Sequoyah license renewal review
- Region II License Renewal Onsite Inspection
- SER Section 2, Scoping and Screening Review
- SER Section 3, Aging Management Review
- SER Section 4, Time-Limited Aging Analyses (TLAA)

Audits and Inspections

- Scoping and Screening Methodology Audit
  - March 11-14, 2013
- Aging Management Program (AMP) Audit, weeks of
  - March 18, 2013, and March 25, 2013
- Environmental Audit
  - April 8-12, 2013
- Region II Inspection (Scoping and Screening & AMPs), weeks of
  - October 21, 2013 – Unit 1 Containment Walk-down
  - November 18, 2013 and December 2, 2013 – Team Inspection

Overview (SER)

- Safety Evaluation Report (SER) with Open Items issued September 29, 2014

- Sequoyah SER contains 1 Open Item (OI):
  - OI B.1.34-1: Reactor Vessel Internals Program

- The final SER is scheduled for publication January 5, 2015

Region 2 Inspections

Inspection Overview:

- **Inspection Procedure IP71002 completed in 2013**
  - Oct. 2013 – Containment walk-down during Unit 1 refueling outage
  - Nov. 2013 – Team Inspection (5 inspectors and 1 NRR materials engineer) on-site for 2 weeks
- **Inspection Scope:**
  - Scoping and Screening Methodology of SSCs
  - Aging Management Programs for In-scope SSCs
  - Updates to the License Renewal Application and Open Items Inspection

Region 2 Inspections

Conclusions:

- Scoping and screening performed in accordance with 10 CFR 54
- Existing programs were effective in managing aging effects
- Plans existed to implement enhancements and new programs
- Information used to prepare the license renewal application was retrievable, auditable, and consistent with 10 CFR 54
- Reasonable assurance that aging effects will be managed and intended functions maintained

Section 3: Aging Management Review

- Section 3.0 – Aging Management Programs
- Section 3.1 – Reactor Vessel & Internals,

  Reactor Coolant System
- Section 3.2 – Engineered Safety Features
- Section 3.3 – Auxiliary Systems
- Section 3.4 – Steam and Power Conversion System
- Section 3.5 – Containments, Structures and Component Supports
- Section 3.6 – Electrical and Instrumentation and Controls System

SER Section 3

3.0.3 – Aging Management Programs

- 43 Aging Management Programs presented by applicant and evaluated in the SER
- 31 Existing and 12 new
- Consistent – 17
- Consistent with Enhancements – 24
- Consistent with Enhancements and Exceptions – 1
- Plant Specific - 1

SER Section 3 Open Item

OI B.1.34-1: Reactor Vessel Internals Program

- Issue: The applicant's response to A/LAI No. lacked information on projected fluence values for upper internals and upper core plate.

- Staff issued RAI B.1.34-9a, requesting the applicant demonstrate 60-year fluence below embrittlement threshold

- Resolution of OI B.1.34-1 is pending staff's review of the applicant's response

SER Section 4: TLAA

- 4.1 Identification of TLAAs
- 4.2 Reactor Vessel Neutron Embrittlement Analysis
- 4.3 Metal Fatigue
- 4.4 Environmental Qualification of Electric Equipment
- 4.5 Concrete Containment Tendon Prestress Analyses
- 4.6 Containment Liner Plate, Metal Containments, and Penetration Fatigue Analyses
- 4.7 Other Plant-Specific TLAAs

Conclusion

Pending satisfactory resolution of the open item, the staff will render its decision in the final SER on meeting the requirements of 10 CFR 54.29(a) for the license renewal of Sequoyah Plant, Units 1 and 2