USNRC APPLICATION

Combined Source and 11e.(2) Byproduct Material License

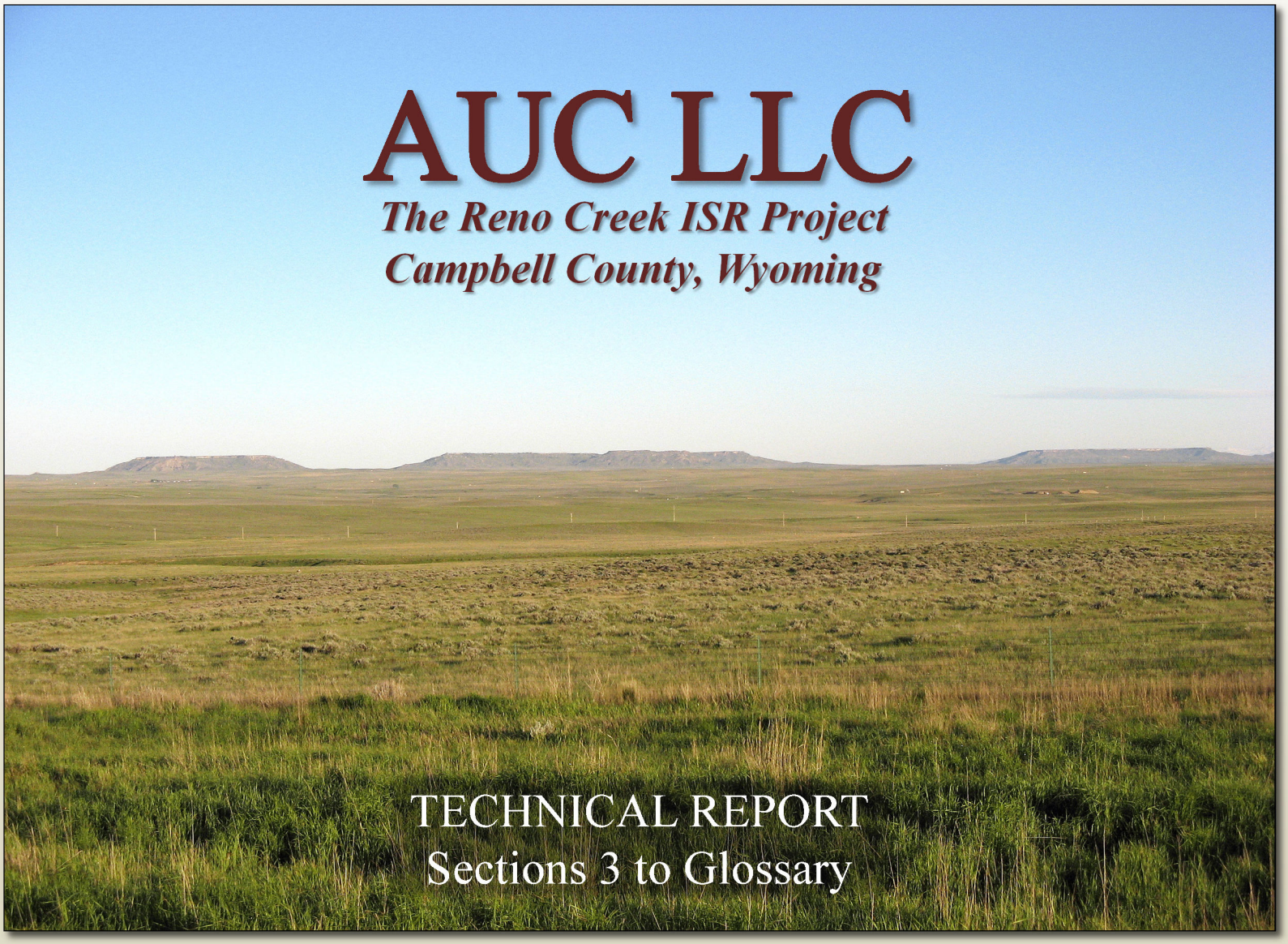

September 2012

AUC LLC
1536 Cole Blvd., Suite 330
Lakewood, Colorado 80401

TABLE OF CONTENTS

TECHNICAL REPORT

SECTION 1 - INTRODUCTION

1 PROPOSED ACTIVITIES 1-1
1.1 Licensing Action Requested 1-2
1.2 Project History 1-2
1.3 Corporate Entities Involved 1-4
1.4 Project Location and Description 1-4
1.5 Surface and Mineral Ownership 1-5
1.6 Orebody Description 1-5
1.7 ISR Method and Recovery Process 1-6
1.7.1 Advantages of the ISR Process 1-8
1.7.2 Ore Amenability to the ISR Method 1-9
1.8 Operating Plans, Design Throughput, and Production 1-9
1.9 Proposed Operating Schedule 1-10
1.10 Byproduct Material Management 1-11
1.11 Groundwater Restoration 1-12
1.12 Decommissioning and Reclamation 1-13
1.13 Financial Assurance Arrangements 1-14

SECTION 2 – SITE CHARACTERIZATION

2 SITE CHARACTERIZATION 2-1
2.1 Site Location and Layout 2.1-1
2.1.1 References 2.1-6
2.2 Land Use 2.2-1
2.2.1 Current Land Use 2.2-1
2.2.2 Projected Land Use 2.2-3
2.2.3 References 2.2-4
2.3 Population Distribution 2.3-1
2.3.1 Regional Population 2.3-1
2.3.2 Population Projections 2.3-2
2.3.3 References 2.3-5
2.4 Historic, Cultural, and Scenic Resources 2.4-1
2.4.1 Regional/Site History 2.4-1
2.4.2 Cultural Resources Survey 2.4-2
2.4.3 Paleontological Resources 2.4-3

TABLE OF CONTENTS (CONTINUED)

2.4.4 Tribal Consultations 2.4-4
2.4.5 Visual and Scenic Resources 2.4-5
2.4.6 References 2.4-7
2.5 Meteorology 2.5-1
2.5.1 Introduction 2.5-1
2.5.2 Regional Overview 2.5-4
2.5.3 Site Specific Analysis 2.5-7
2.5.4 Air Quality 2.5-15
2.5.5 References 2.5-80
2.6 Geology 2.6-1
2.6.1 Regional Geology 2.6-1
2.6.2 Site Geology 2.6-5
2.6.3 Drill Holes 2.6-18
2.6.4 Soils 2.6-20
2.6.5 Seismology 2.6-25
2.6.6 References 2.6-33
2.7 Water Resources 2.7-1
2.7.1 Surface Water Hydrology 2.7-2
2.7.2 Groundwater 2.7-17
2.7.3 References 2.7-72
2.8 Ecological Resources 2.8-1
2.8.1 Introduction 2.8-1
2.8.2 Regional Setting 2.8-1
2.8.3 Climate 2.8-2
2.8.4 Terrestrial Ecology 2.8-3
2.8.5 References 2.8-9
2.9 Baseline Radiological Survey Characteristics 2.9-1
2.9.1 Introduction 2.9-1
2.9.2 Baseline Gamma Radiation Survey 2.9-2
2.9.3 Soil Sampling 2.9-8
2.9.4 Sediment Sampling 2.9-9
2.9.5 Ambient Gamma Dose and Radon Monitoring 2.9-10
2.9.6 Air Particulate Monitoring 2.9-12
2.9.7 Radon Flux 2.9-13
2.9.8 Ground Water Sampling 2.9-13
2.9.9 Surface Water Sampling 2.9-15
2.9.10 Vegetation Sampling 2.9-16
2.9.11 References 2.9-60

TABLE OF CONTENTS (CONTINUED)

SECTION 3 – DESCRIPTION OF FACILITIES

3 DESCRIPTION OF PROPOSED FACILITY 3-1
3.1 ISR Process and Equipment 3-2
3.1.1 Proposed Reno Creek Project Area Ore Bodies 3-2
3.1.2 Delineation Drilling 3-3
3.1.3 Well Completion and Integrity Testing 3-4
3.1.4 ISR Process 3-12
3.1.5 Wellfield Design 3-15
3.1.6 Wellfield Operational Monitoring 3-17
3.1.7 Water Balance 3-19
3.1.8 Wastewater Disposal Capacity 3-22
3.1.9 Pore Volume Calculation 3-23
3.2 Central Processing Plant, Processing, and Chemical Storage 3-24
3.2.1 Central Processing Plant Equipment 3-25
3.2.2 Chemical Storage Facilities 3-33
3.2.3 Occupational and Environmental Safety Considerations 3-37
3.3 Satelite Facilities or Other Equivalentt Feed 3-40
3.4 Instrumentation and Control 3-40
3.4.1 Wellfield Operations/Ion Exchange Circuit 3-40
3.4.2 Process Areas 3-41
3.4.3 Yellowcake Drying Systems 3-41
3.4.4 Radiological Monitoring Instrumentation 3-42
3.4.5 Solid 11e.(2) Byproduct Material Disposal 3-42
3.5 References 3-54

SECTION 4 – EFFLUENT CONTROL SYSTEMS

4 EFFLUENT CONTROL SYSTEMS 4-1
4.1 Gaseous Emissions and Airborne Particulates 4-1
4.2 Gaseous Effluents 4-2
4.2.1 Air Particulate Effluents 4-3
4.2.2 Reporting Effluent Releases 4-5
4.3 Byproduct Material Management 4-7
4.3.1 Liquid 11e.(2) Byproduct Material 4-7
4.3.2 Liquid Non-11e.(2) Byproducts 4-8
4.3.3 Solid 11e.(2) Byproduct Materials 4-9
4.3.4 Solid Non-11e.(2) Byproduct Materials 4-10
4.3.5 Lined Backup Storage Pond Design 4-11

TABLE OF CONTENTS (CONTINUED)

4.3.6 Liquid 11e.(2) Byproduct Material Disposal 4-16
4.4 References 4-23

SECTION 5 - OPERATIONS

5 OPERATIONS 5-1
5.1 Corporate Organization and Administrative Procedure 5-1
5.1.1 Board of Directors 5-2
5.1.2 President and Chief Executive Officer 5-2
5.1.3 General Manager 5-2
5.1.4 Manager of Environmental, Health and Safety 5-3
5.1.5 Radiation Safety Officer 5-3
5.1.6 Radiation Safety Technicians 5-4
5.1.7 ALARA Program Responsibilities 5-4
5.1.8 Reporting Procedures 5-6
5.2 Management Control Program 5-6
5.2.1 Operating Procedures 5-7
5.2.2 Radiation Work Permits 5-7
5.2.3 Record Keeping and Retention 5-8
5.2.4 Performance-Based License Condition 5-9
5.2.5 Safety and Environmental Review Panel 5-10
5.2.6 Reporting 5-12
5.3 Management Audit and Inspection Program 5-13
5.3.1 Radiation Safety Inspections 5-13
5.3.2 Annual ALARA Audits 5-14
5.4 Radiation Safety Staff Qualifications 5-15
5.4.1 Radiation Safety Officer Qualifications 5-15
5.4.2 Radiation Safety Technician Qualifications 5-16
5.5 Radiation Safety Training 5-16
5.5.1 Radiation Safety Training Program Content 5-17
5.5.2 Testing Requirements 5-18
5.5.3 On-the-Job-Training 5-19
5.5.4 Refresher Training 5-19
5.5.5 Training Records 5-19
5.6 Security 5-19
5.6.1 License Area and Plant Security 5-21
5.6.2 Transportation Security 5-21
5.7 Radiation Safety Controls and Monitoring 5-21
5.7.1 Effluent Control Techniques 5-22

TABLE OF CONTENTS (CONTINUED)

5.7.2 External Radiation Exposure Monitoring Program 5-28
5.7.3 In-Plant Airborne Radiation Monitoring Program..... 5-31
5.7.4 Exposure Calculations 5-36
5.7.5 Bioassay Program 5-42
5.7.6 Contamination Control Program..... 5-42
5.7.7 Airborne Effluent and Environmental Monitoring Programs..... 5-49
5.7.8 Groundwater/Surface Water Monitoring Program 5-52
5.7.9 Quality Assurance Program 5-59
5.8 References..... 5-70

SECTION 6 – GROUNDWATER QUALITY RESTORATION, SURFACE RECLAMATION, AND FACILITY DECOMMISSIONING

6 GROUNDWATER QUALITY RESTORATION, SURFACE RECLAMATION, AND FACILITY DECOMMISSIONING 6-1
6.1 Groundwater Restoration 6-1
6.1.1 Groundwater Restoration Criteria..... 6-2
6.1.2 Determination of Conclusion of Groundwater Restoration 6-2
6.1.3 Groundwater Restoration Monitoring..... 6-4
6.1.4 Groundwater Restoration Methods 6-5
6.1.5 Restoration Stability Monitoring 6-9
6.1.6 Restoration Schedule 6-12
6.1.7 Effectiveness of Groundwater Restoration Methods 6-13
6.1.8 Environmental Effects of Groundwater Restoration..... 6-15
6.1.9 Well Plugging and Abandonment..... 6-16
6.1.10 Restoration Wastewater Disposal 6-16
6.2 Plans and Schedules for Reclaiming Disturbed Lands 6-17
6.2.1 Surface Disturbance 6-19
6.2.2 Topsoil Handling and Replacement..... 6-21
6.2.3 Final Contouring 6-21
6.2.4 Re-Vegetation Practices..... 6-21
6.3 Procedures for Removing and Disposing of Structures and Equipment..... 6-22
6.3.1 Preliminary Radiological Surveys and Contamination Control..... 6-22
6.3.2 Removal of Process Buildings and Equipment..... 6-23
6.3.3 Waste Transportation and Disposal 6-24
6.4 Methodologies for Conducting Post-Reclamation and Decommissioning Radiological Surveys 6-24
6.4.1 Cleanup Criteria 6-24
6.4.2 Excavation Control Monitoring 6-30

TABLE OF CONTENTS (CONTINUED)

6.4.3 Surface Soil Cleanup Verification and Sampling Plan 6-30
6.4.4 Quality Assurance 6-30
6.5 Decommissioning Health Physics and Radiation Safety 6-30
6.5.1 Records and Reporting Procedures 6-31
6.6 Financial Assurance 6-31
6.7 References 6-38

SECTION 7 – POTENTIAL ENVIRONMENTAL EFFECTS

7 POTENTIAL ENVIRONMENTAL EFFECTS 7-1
7.1 Potential Impacts during Construction for the Proposed Action 7-1
7.1.1 Potential Construction Impacts to Land Use 7-2
7.1.2 Potential Construction Impacts to Socioeconomics 7-7
7.1.3 Potential Construction Impacts to Historic, Scenic and Cultural Resources . 7-9
7.1.4 Potential Construction Impacts to Air Quality 7-11
7.1.5 Potential Construction Impacts to Geology and Soils 7-11
7.1.6 Potential Construction Impacts to Water Resources 7-13
7.1.7 Potential Ecological Effects of Construction 7-15
7.1.8 Potential Noise Effects of Construction 7-16
7.2 Potential Impacts during Operations for the Proposed Action 7-19
7.2.1 Potential Operation Impacts to Land Use 7-19
7.2.2 Potential Operation Impacts to Socioeconomics 7-15
7.2.3 Potential Operation Impacts to Historic, Scenic and Cultural Resources 7-21
7.2.4 Potential Operation Impacts to Air Quality 7-23
7.2.5 Potential Operation Impacts to Geology and Soils 7-25
7.2.6 Potential Operation Impacts to Water Resources 7-27
7.2.7 Potential Operation Impacts to Ecological Resources 7-31
7.2.8 Potential Operation Impacts to Noise 7-32
7.3 Radiological Effects 7-33
7.3.1 Exposure Pathways 7-33
7.3.2 MILDOS -AREA 7-34
7.3.3 Potential Occupational Radiological Impacts 7-40
7.4 Non-Radiological Effects 7-44
7.4.1 Potential Exposure from Air Pathways 7-44
7.4.2 Potential Exposures for Water Pathways 7-44
7.5 Effects of Accidents 7-45
7.5.1 Liquid Waste and Process Fluid Accidents 7-45
7.5.2 Fires and Explosions 7-57
7.4.3 Transportation Accident Risk 7-58

TABLE OF CONTENTS (CONTINUED)

7.6 Socioeconomic Costs 7-66
7.7 References 7-67

SECTION 8 - ALTERNATIVES

8 ALTERNATIVES 8-1
8.1 Description of alternatives 8-1
8.1.1 No-Action Alternative 8-1
8.1.2 Proposed Action 8-2
8.1.3 Reasonable Alternatives Considered But Rejected 8-3
8.1.4 Central Processing Plant versus Satellite Facilities 8-6
8.1.5 Lixiviant Chemistry 8-6
8.1.6 Groundwater Restoration 8-8
8.1.7 Alternate Byproduct Management Options 8-8
8.1.8 Uranium Processing Alternatives 8-11
8.1.9 Comparison of the Predicted Environmental Impacts 8-12
8.2 References 8-30

SECTION 9 – BENEFIT COST ANALYSIS

9 BENEFIT-COST ANALYSIS 9-1
9.1 Benefit-Cost Analysis General Background 9-1
9.2 Alternatives and Assumptions 9-2
9.2.1 Development Alternatives 9-2
9.2.2 Key Assumptions and Limitations 9-2
9.3 Potential Economic Benefits of Project Construction and Operation 9-4
9.3.1 IMPLAN Input Data 9-4
9.3.2 Potential Employment Benefits 9-6
9.3.3 Potential State and Local Tax Revenue Benefits 9-6
9.4 Potential External Costs of Project Construction and Operation 9-7
9.4.1 Short Term External Costs 9-8
9.4.2 Long Term External Costs 9-10
9.4.3 Groundwater Impacts 9-11
9.4.4 Radiological Impacts 9-11
9.5 Benefit-Cost Summary 9-12
9.6 References 9-19

TABLE OF CONTENTS (CONTINUED)

SECTION 10 – ENVIRONMENTAL APPROVALS AND CONSULTATIONS

10 ENVIRONMENTAL APPROVALS AND CONSULTATIONS 10-1

TABLE OF CONTENTS (CONTINUED)

LIST OF ADDENDA

Addendum 1-A: Summary of Rocky Mountain Energy's Pilot Plant Operations
Addendum 1-B: NRC Pre-Submission Application Audit Matrix
Addendum 2.5-A: Meteorological System Audit Report
Addendum 2.6-A: Geology Tables and Figures
Addendum 2.6-B: Plugging and Abandonment Plan
Addendum 2.6-C: Seismology Tables and Figures
Addendum 2.7-A: Surface Water Resources
Addendum 2.7-B: Groundwater Resources
Addendum 2.7-C: Groundwater Flow Model Report
Addendum 2.7-D: Pump Test Report
Addendum 2.7-E: Hydrogeologic Integrity Test Report
Addendum 2.9-A: Standard Operating Procedures and Sampling and Analysis Plan
Addendum 2.9-B: Digital Air Sampler Calibration Reports
Addendum 2.9-C: Proposed Modification to Regulatory Guide 4.14 Pre-Operational Air-Sampling Guidance
Addendum 4-A: Subsurface Exploration and Geotechnical Engineering Report
Addendum 4-B: UIC Class I Deep Disposal Well Permit Application
Addendum 6-A: Restoration Action Plan
Addendum 6-B: RESRAD Report
Addendum 7-A: MILDOS Report and Example Output

ABBREVIATIONS AND ACRONYMS

-A-

AADT	Annual Average Daily Traffic
ALARA	As Low As Reasonably Achievable
ALI	Annual Limit Intake
amsl	above mean sea level
ANSI	American National Standards Institute
AP	Airport
APD	Application for Permit to Drill
APE	Area of potential effect
API	American Petroleum Institute
AQD	Air Quality Division
ASME	American Society of Mechanical Engineers
ASOS	Automated Surface Observing System
AUC	AUC, LLC

-B-

BACT	Best Available Control Technology
BCA	Benefit-Cost Analysis
BEA	United States Bureau of Economic Analysis
bgs	below ground service
BKS	BKS Environmental Associates, Inc.
BLM	United States Department of the Interior, Bureau of Land Management
BMP	Best Management Practices
BOE	Bureau of Explosives
BPT	Best Practicable Technology

-C-

CA/T	Central Artery/Tunnel
CAD	Computer-Aided Design
CBM	Coal Bed Methane
CBNG	Coal Bed Natural Gas
CEDE	Committed Effective Dose Equivalent
CERCLA	Comprehensive Environmental, Response, Compensation and Liability Act
CESQG	Conditionally Exempt Small Quantity Generator
CGA	Compressed Gas Association

ABBREVIATIONS AND ACRONYMS (CONTINUED)

CGP	Construction General Permit
CMF	Central Measuring Facility
CO_2	Carbon Dioxide
COOP	Cooperative Observer Program
CPP	Central Processing Plant
CPVC	Chlorinated Polyvinyl Chloride

-D-

DAC	Derived Air Concentration
DDE	Deep Dose Equivalent
DDW	Deep Disposal Well
DEQ	Department of Environmental Quality
DHS	Department of Homeland Security
DVD	Digital Video Disk

-E-

E	East
EA	Environmental Assessment
EDR	Electro Dialysis Reversal
EFI	Energy Fuels Inc.
Eh	oxidation-reduction potential
EIS	Environmental Impact Statement
EJ	Environmental Justice
EJ Study Area	Environmental Justice Study Area
ER	United States Nuclear Regulatory Commission Environmental Report
ESA	Endangered Species Act
ESO	Ecological Services Office
ESRI	Environmental Systems Research Institute

-F-

FEIS	Final Environmental Impact Statement
FEMA	Federal Emergency Management Agency
FIDLER	Field Instrument for the Detection of Low Energy Radiation
FSER	Final Safety Evaluation Report

-G-

ABBREVIATIONS AND ACRONYMS (CONTINUED)

GIS	Geographical Information System
GPS	Global Positioning System
GWR	Ground Water Restoration

-H-

H_2O_2	Hydrogen Peroxide
HDPE	High Density Polyethylene
HMR	Hazardous Materials Regulations
HPIC	High Pressure Ionization Chamber
HTF	Heat Transfer Fluid
HUC	Hydrologic Unit Code
HVAC	"Heating, Ventilation, and Air Conditioning"

-I-

IBC	International Building Code
ICF	ICF International
ICRP	International Commission on Radiological Protection
IDLH	Immediately Dangerous To Life And Health
IML	Inter-Mountain Labs
IMPLAN	Impact Analysis for Planning
ISC3	Industrial Source Complex
ISR	In Situ Recovery
IUC	International Uranium Corporation
IX	Pressurized Downflow Ion Exchange

-J-

-K-

-L-

LLD	Lower Limits Of Detection
LQD	Land Quality Division
LSA	Low Specific Activity

-M-

MCL	Maximum Containment/Concentration Level
MDL	Method Detection Limit
MET	Meteorological

ABBREVIATIONS AND ACRONYMS (CONTINUED)

MIT	Mechanical Integrity Test
MP wells	Baseline production monitor wells
MSL	Mean Sea Level Elevation

-N-

N	North
NAAQS	National Ambient Air Quality Standards
Na_2CO_3	Sodium Carbonate or Soda Ash
NAD	North American Datum
$NaHCO_3$	Sodium Bicarbonate (commonly known as baking soda)
NAICS	North American Industrial Classification System
NEPA	National Environmental Policy Act
NFPA	National Fire Protection Association
NHD	National Hydrography Dataset
NOAA	National Oceanic and Atmospheric Administration
NPDES	National Pollutant Discharge Elimination System
NPV	Net Present Value
NRC	United States Nuclear Regulatory Commission
NRCS	Natural Resource Conservation Service
NRHP	National Register of Historic Places
NVLAP	National Voluntary Laboratory Accreditation Program
NWI	National Wetlands Inventory
NWP	Nationwide Permit
NWS	National Weather Service

-O-

OHV	Off-Highway Vehicle
OA	Overlying aquifer
OM	Overlying aquifer well
OSHA	Occupational Safety and Health Administration
OSL	Optically-Stimulated Luminescent Dosimeter
OWUS	Other Waters of the United States

-P-

PBL	Performance Based License
PBLC	Performance Based License Condition
PCN	Pre-construction Notification
PFYC	Potential Fossil Classification System

ABBREVIATIONS AND ACRONYMS (CONTINUED)

PM_{10}	Particulate Matter 10 Microns or Larger
PRB	Powder River Basin
PRI	Power Resources, Inc.
PSM	Process Safety Management
PV	Pore volumes
PVC	Polyvinyl Chloride
PZA	Production zone aquifer
PZM	Production zone monitor well

-Q-

QA	Quality Assurance
QAM	Quality Assurance Manual
QC	Quality Control

-R-

R	Range
RAP	Restoration Action Plan
RCRA	Resource Conservation and Recovery Act
REIS	Regional Economic Information System
Reno Creek Project	Reno Creek ISR Uranium Project (Proposed Project)
RM	Monitor well ring wells during production
RME	Rocky Mountain Energy
RMP	Risk Management Plan
RO	Reverse Osmosis
ROD	Record of Division
RPC	Regional Purchase Coefficient
RPP	Radiation Protection Program
RQ	Reporting Quantities
RSO	Radiation Safety Officer
RST	Radiation Safety Technician
RTV	Restoration Target Values
RWP	Radiation Work Permit

-S-

S	South
SA	Shallow water aquitard
SCS	Soil Conservation Service
SDR-17	Standard Dimension Ratio 17

ABBREVIATIONS AND ACRONYMS (CONTINUED)

SDWA	Safe Drinking Water Act
SEO	State of Wyoming Engineering Office
SER	Safety Evaluation Report
SERP	Safety and Environmental Review Panel
SGCN	Species Of Greatest Conservation Need
SHPO	Wyoming State Historic Preservation Office
SIL	Significant Impact Level
SM	Shallow water monitor well
SM unit	Shallow water table unit present in some locations
SODAR	Sonic Detection and Ranging
SOP	Standard Operating Procedures
SP	Spontaneous Potential
SRWP	Standard Radiation Work Permit
SSC	"Structure, System, or Component"

-T-

T	Township
T&E	Threatened and Endangered
TCP	Traditional Cultural Places
TDS	Total Dissolved Solids
TEDE	Total Effective Dose Equivalent
TENORM	Technologically Enhanced Naturally Occurring Radioactive Material
TER	Technical Evaluation Report
TLD	Thermo Luminescent Dosimeters
TPQ	Threshold Planning Quantities
TR	United States Nuclear Regulatory Commission Technical Report
TQ	Threshold Quantities

-U-

UA	Underlying aquitard
UM	Underlying aquitard well
U.S.	United States
U_3O_8	"Triuranium Octoxide, or Yellowcake"
UBC	Uniform Building Code
UCL	Upper Control Limit
UIC	Underground Injection Control
USACE	United States Army Corps of Engineers

ABBREVIATIONS AND ACRONYMS (CONTINUED)

USDA	United States Department of Agriculture
USDW	Underground Source Of Drinking Water
USEPA	United States Environmental Protection Agency
USFWS	"United States Department of the Interior, Fish and Wildlife Service"
USGS	United States Geological Survey
UTM	Universal Transverse Mercator

-V-

VRM	Visual Resource Management

-W-

W	West
WAAS	Wide Area Augmentation System
WDEQ	Wyoming Department of Environmental Quality
WDEQ-LQD	Wyoming Department of Environmental Quality – Land Quality Division
WDEQ-SHWD	Wyoming Department of Environmental Quality – Solid and Hazardous Waste Division
WDEQ-WQD	Wyoming Department of Environmental Quality – Water Quality Division
WGFD	Wyoming Game and Fish Department
WL	Working Level
WLM	Working Level Month
WOGCC	Wyoming Oil and Gas Conservation Commission
WoUS	Waters of the United States
WQD	Water Quality Division
WRCC	Western Regional Climate Center
WY	Wyoming
WYDOT	Wyoming Department of Transportation
WYGISC	Wyoming Geographic Information Science Center
WYPDES	Wyoming Pollutant Discharge Elimination System

-X-
-Y-
-Z-

UNITS OF MEASURE

%	percent
% g	percent of gravitational acceleration
µg/Kg	micrograms per kilogram or parts per billion
µg/L	micrograms per liter or parts per billion
µCi/g	microcuries per gram
µCi/Kg	microcuries per kilogram
µCi/L	microcuries per liter
$\mu Ci/m^3$	microcurie(s) per cubic meter
µrem	microrem
µR/h	microrem per hour
µSv	microsievert
^{o}	degrees
^oC	degrees Celsius
^oF	degrees Fahrenheit
ac	acre
ac-ft	acre-feet
cfm	cubic feet per minute
cfs	cubic feet per second
Ci/yr	Curies per year
cm	centimeters
cm^3	cubic centimeter(s)
cpm	counts per minute
dB	decibel
dBA	decibel A-weighting
DPM	disintegrations per minute
ft	foot
ft^3	cubic foot (feet)
g/l	grams per liter
gpm	gallon per minute
in	inch
Km	kilometer
lpm	liter per minute
m	meter
m^2	square meter
mg/L	milligrams per liter or part per million
mi	mile
mph	miles per hour
mR	milli Roentgens
mrem	millirem

UNITS OF MEASURE (CONTINUED)

mrem/hr	millirem per hour
mSv	millisievert
pCi/g	picocuries per gram
pCi/L	picocuries per liter
pCi/Kg	picocuries per kilogram
pCi/m^3	picocurie(s) per cubic meter
ppm	parts per million
psi	pound per square inch
psig	pound per square inch
R	rem
Sv	sievert
yd^3	cubic yard(s)

TABLE OF CONTENTS

3 DESCRIPTION OF PROPOSED FACILITY 3-1
3.1 ISR Process and Equipment 3-2
3.1.1 Proposed Reno Creek Project Area Ore Bodies 3-2
3.1.2 Delineation Drilling 3-3
3.1.3 Well Completion and Integrity Testing 3-4
3.1.3.1 Well Completion Materials and Methods 3-4
3.1.3.2 Well Development 3-10
3.1.3.3 Well Mechanical Integrity Testing 3-11
3.1.4 ISR Process 3-12
3.1.4.1 Lixiviant 3-13
3.1.4.2 ISR Chemistry 3-14
3.1.4.3 Uranium Recovery 3-15
3.1.5 Wellfield Design 3-15
3.1.6 Wellfield Operational Monitoring 3-17
3.1.7 Water Balance 3-19
3.1.8 Wastewater Disposal Capacity 3-22
3.1.9 Pore Volume Calculation 3-23
3.1.9.1 Average Completed Thickness 3-23
3.1.9.2 Production Zone Porosity 3-23
3.1.9.3 Flare Factor Values 3-24
3.2 Central Processing Plant, Processing, and Chemical Storage 3-24
3.2.1 Central Processing Plant Equipment 3-25
3.2.1.1 Ion Exchange Circuit 3-25
3.2.1.1.1 Ion Exchange Circuit Equipment 3-26
3.2.1.2 Elution Circuit 3-27
3.2.1.2.1 Elution Circuit Equipment 3-27
3.2.1.3 Precipitation Circuit 3-28
3.2.1.3.1 Precipitation Circuit Equipment 3-28
3.2.1.4 Yellowcake Drying and Packaging System 3-29
3.2.1.4.1 Uranium Drying and Packaging Equipment 3-30
3.2.1.5 Groundwater Restoration Circuit 3-32
3.2.1.5.1 Groundwater Restoration System Equipment 3-32
3.2.1.6 Bleed Treatment Circuit 3-33
3.2.1.7 Backup Generator 3-33
3.2.2 Chemical Storage Facilities 3-33
3.2.2.1 Process Related Chemicals 3-34
3.2.2.1.1 Sodium Chloride Storage 3-34
3.2.2.1.2 Sodium Carbonate Storage 3-34
3.2.2.2 Acid Storage and Delivery System 3-35
3.2.2.3 Sodium Hydroxide Storage and Delivery System 3-35

3.2.2.4 Hydrogen Peroxide Storage and Delivery System 3-35
3.2.2.5 Oxygen Storage and Delivery System 3-36
3.2.2.6 Carbon Dioxide Storage and Delivery System 3-36
3.2.2.7 Chemical Reductant 3-36
3.2.2.8 Non-Process Related Chemicals 3-36
3.2.3 Occupational and Environmental Safety Considerations 3-37
3.2.3.1 CPP Gaseous Containment 3-37
3.2.3.2 CPP Liquid Containment 3-39
3.3 Satelite Facilities or Other Equivalentt Feed 3-40
3.4 Instrumentation and Control 3-40
3.4.1 Wellfield Operations/Ion Exchange Circuit 3-40
3.4.2 Process Areas 3-41
3.4.3 Yellowcake Drying Systems 3-41
3.4.4 Radiological Monitoring Instrumentation 3-42
3.4.5 Solid 11e.(2) Byproduct Material Disposal 3-42
3.5 References 3-54

List of Tables

Table 3-1: Typical Lixiviant Concentrations 3-43
Table 3-2: Proposed Reno Creek Project Tank Sizing Summary 3-44

List of Figures

Figure 3-1: Conceptual Plant Facilites Layout 3-45
Figure 3-2: Proposed Well Completion Methods 3-46
Figure 3-3: Typical Production Unit Pattern 3-47
Figure 3-4: Typical Header House Design 3-48
Figure 3-5: Water Balance - Production Phase Only 3-49
Figure 3-6: Water Balance - Production and Restoration Phases 3-50
Figure 3-7: Water Balance - Restoration Phase Only 3-51
Figure 3-8: Conceptual CPP Layout 3-52
Figure 3-9: Process Flow Diagram 3-53

3 DESCRIPTION OF PROPOSED FACILITY

This section outlines and discusses several key descriptions of the proposed facility including the proposed ISR process, the Central Processing Plant (CPP) with associated chemical storage, and instrumentation and monitoring control programs as requested in NUREG-1569 (Section 3.1). Related information and discussion, including more details on operating plans and schedules, wellfield design and testing can be found in:

- Section 2.1 of this TR (Site Location and Layout);
- Section 2.6 of this TR (Geology and Soils);
- Section 4 of this TR (Effluent Control Systems);
- Section 5 of this TR (Operations);
- Sections 1.3, 1.4 and 1.5 of the ER (Introduction of the ER);
- Section 4.13 of the ER (Environmental Impacts);
- Section 6 of the ER (Environmental Measurements/Monitoring).

The Proposed Reno Creek Project (Proposed Project) area encompasses approximately 6,057 acres. The CPP will be located in the SE¼ of the NE¼ of Section 1, Township 42N, Range 74W in Campbell County, Wyoming. The CPP will include a uranium recovery circuit, uranium elution circuit, uranium precipitation circuit, and yellowcake drying/packaging system. Adjacent structures will house the administrative office, maintenance shop, and other infrastructure required for operations as illustrated in Figure 3-1. The AUC waste water management system will include up to four Class I Deep Disposal Wells (DDW) and a backup storage pond to temporarily store waste water as needed. The total disturbed area of the CPP and adjacent structures is estimated at 15.5 acres. The CPP, adjacent buildings and storage pond will be fenced to exclude livestock and wildlife, and control access to the site.

The proposed Production Units, used for injection and recovery operations throughout the life of the Proposed Project, will cover approximately 481 acres. These areas will be controlled, therefore fenced and signed to restrict access of livestock and individuals to the Production Units, but will be done in a manner that will minimize the amount of range land lost to the surface owners. The proposed Production Unit locations are shown in Figure 2.1-3.

Each Production Unit will be further divided into wellfields. Each wellfield will be used to delineate the portion of the Production Unit which will be assigned to a specific central collection facility called a header house. It is currently estimated that the Proposed Project will contain a total of 67 header houses. However, ongoing delineation and development drilling activities are expected to change either the total size or number of the Production Units and number of associated wellfields. The wellfield injection and

recovery wells will be piped individually to the header houses which will contain manifolds and piping, along with monitoring and control equipment.
Key proposed facility features and characteristics include:

- Proposed Project area = approximately 6,057 acres;
- Controlled area (fenced areas) = approximately 481 acres;
- Restricted area will restrict access to areas where individuals may be exposed to radiation and 11e.(2) byproduct and/or areas exceeding 2 mrem an hour;
- Unrestricted area = approximately 5,576 acres;
- Maximum licensed recovery flow = 11,000 gpm;
- Anticipated restoration flow = 1,050 gpm;
- Approximately 12 production units each generally comprised of three to seven wellfields;
- Each wellfield will be equipped with one header house with approximately 67 header houses total;
- Each header house will service between 15 to 30 recovery wells and 25 to 50 injection wells depending on the design of each wellfield;
- An estimated 600 monitor wells (perimeter and overlying);
- Yellowcake drying/packaging capacity = 2,000,000 lbs/year;
- One double lined backup storage pond with potential of an optional storage pond; and
- Up to four Class I deep disposal wells.

All facilities associated with this Proposed Project will be subject to AUC's safety and security programs as outlined in Section 5 of this TR.

3.1 ISR Process and Equipment

3.1.1 Proposed Reno Creek Project Area Ore Bodies

In the Pumpkin Buttes Uranium District, almost all important economic uranium deposits occur in medium to coarse-grained sand facies of the Eocene Wasatch Formation. Uranium mineralization at the Proposed Project occurs within the lower portion of the Wasatch Formation. The uranium mineralization occurs as coatings on sand grains along roll front trends formed at geochemical reduction-oxidation (redox) boundaries within the host sandstone aquifer.

As noted in NUREG-1910 (GEIS Section 2.1), the main ore minerals in the unoxidized zone are coffinite and pitchblende (a variety of uraninite). Low concentrations of vanadium (~100 ppm) are sometimes associated with the uranium deposits at the Proposed Project, based on metallurgical testing conducted by AUC. Concentrations of vanadium identified thus far do not justify recovery of vanadium. Of five recently tested core samples, only one exhibited molybdenum (0.6 mg/kg) Also, selenium was only detected in one sample at 6.9 mg/kg. Arsenic was detected in all samples ranging from 1.4 to 14 mg/kg Scattered lenses of calcium carbonate cement occur throughout the area, but only rarely contain anomalous uranium.

Uranium deposits accumulated along roll-fronts at the down-gradient terminations of oxidation tongues within the host sandstones. The deposits occur within sandstones which are intermittently interbedded with lenses of siltstone and claystone, commonly referred to as mudstones at the Proposed Project due to the mixture of particle sizes. The thickness of the ore is controlled by the thickness of the sandstone host containing the solution-front. A diagram of a roll front typical of fronts found at the Proposed Project is shown in Figure 2.6A-27 of this TR.

The Eocene Wasatch Formation is approximately 500 to 700 feet thick in the Proposed Project area. Uranium mineralization is confined to the sandy facies and clay/sand boundaries in the lower part of the formation. The host sandstones of the Production Zone Aquifer (PZA) were deposited as the result of generally northward flowing fluvial systems. The host sands occasionally contain significant mudstone sequences with varying silt and clay content. Uranium deposits are generally found within sand units ranging from 50 to 200 feet in thickness, and at depths ranging from 170 to 450 feet below ground surface. Uranium intercepts are variable in thickness ranging from one to 30 feet thick. Thin, low- grade residual upper and lower limbs of the roll fronts are found in the less permeable zones at the top and bottom of oxidized sand units bounded by unoxidized mudstones.

Though total mineable resources for the Proposed Project are not fully developed at this time, AUC estimates, for the purposes of this License Application, recoverable ore resources of on the order of 15.7 million pounds of uranium at an average grade of approximately 0.065 percent U_3O_8. Based on AUC analysis and a review of the ISR GEIS (NRC 2009, p.3-49), the Proposed Action's ore body closely resembles the roll-front deposits assessed previously by NRC in the Wyoming East Region, which includes the Proposed Project area, as well as those in all of the other ISR GEIS regional analyses.

3.1.2 Delineation Drilling

Due to the variable shape and size of the ore body, distribution of the deposits and grade of those deposits, delineation drilling is essential. AUC will conduct delineation drilling

in multiple phases to determine the full extent of the resource and to facilitate design of wellfield infrastructure such as injection, recovery and monitor well positioning. Geophysical logging and sample collection will be performed in each drill hole to determine the lithology of the formation, the estimated uranium grade and other factors pertinent to the design of the wellfields. These tests will include single point resistance, spontaneous potential, neutron and natural gamma geophysical logs. Deviation logs will also be completed in order to determine the drift between the surface and the bottom of the drill hole. This allows for a more precise estimation of the ore body and identification of future production well locations.

Preliminary production and monitoring well locations will be determined once an adequate amount of the deposit area has been drilled. This may require delineation holes to be drilled in a grid as small as 100 feet for the first phase. This allows for the determination of ore reserves and initial layout of the wellfields. If the need arises, additional drilling in a grid as small as 50 feet for the second phase may be required to further map the ore body and determine production well locations. This delineation drilling will identify optimum locations for monitoring wells in the Production Zone and Overlying Aquifers.

The last phase of delineation is drilling pilot holes for injection and recovery wells. Prior to installation of well casing, geophysical logs of all pilot holes are reviewed to confirm whether the holes intersect a pattern containing sufficient resources to economically recover uranium. These logs also help determine the screen interval and if the hole proves to be economical. If it is determined that a pilot hole is not sufficient for economic recovery, the hole will not be cased. Instead, it will be plugged and abandoned in accordance with the procedures outlined in WDEQ-LQD NonCoal Rules and Regulations Chapter 8, “Exploration by Drilling”.

3.1.3 Well Completion and Integrity Testing

Well completion materials, methods, development, and integrity testing are described below. All work will be performed under the direction and supervision of qualified AUC personnel and by a Wyoming-licensed water well contractor.

3.1.3.1 Well Completion Materials and Methods

During the life of the Proposed Project, AUC will install numerous injection, recovery and monitor wells. Injection wells will be used to convey barren lixiviant to the Production Zone Aquifer (PZA), while recovery wells will be used to recover pregnant lixiviant after contact with uranium ore. These wells will be installed using identical completion methods so they can be used for either injection or recovery. Ability to

change well function allows for improved uranium recovery, more efficient groundwater restoration, as well as an improved ability to respond to potential excursions of lixiviant. These wells will be installed using well completion Method 1 described below.

Interior monitor wells will be screened in the Overlying Aquifer, while perimeter monitor wells will be screened in the PZA. Completion intervals for these wells will be predetermined; therefore they will be installed either by Method 2, Method 3 or Method 4, which are also described below.

Well Methods 1, Method 2, and Method 3 will be constructed of Standard Diameter Ratio (SDR) 17 polyvinyl chloride (PVC) with a sufficient pressure rating to withstand the maximum anticipated injection pressure of 145 psi and the maximum resistance to hydraulic collapse pressure anticipated during cementing of the well. SDR 17 PVC casing has a burst pressure rating of 250 psi and a resistance to hydraulic collapse pressure rating of 224 psi. SDR 17 casing is typically supplied in 20 foot lengths and will be mechanically joined with either threaded connections or a water tight O-ring seal, secured in place by a high strength nylon spline. Wells constructed using Method 4 wells are planned to be installed using 2 to 4 inch Schedule 40 or Schedule 80 PVC glued bell casing.

In accordance with WDEQ/LQD Chapter 11, AUC plans to use an annular seal consisting of neat cement slurry or a cement bentonite mixture approved by the LQD Administrator. A cement bentonite mixture was approved by the LQD Administrator for the installation of AUC's regional baseline monitor wells (DN 401). The purpose of sealing annular space is to assure structural integrity of well casing, stabilize upper formations, protect against contamination of the well from surface, and to prevent migration of ground water from one aquifer or water-bearing stratum to another.

- **Method 1** (Figure 3-2)
  1) A 5.0 to 6.5 inch diameter pilot hole will be drilled through the projected mineralized zone within the PZA. The pilot hole may penetrate the upper portion of the Underlying Aquitard to obtain an accurate geophysical log, however the pilot hole will not fully penetrate the Underlying Aquitard that separates the PZA from the Underlying Unit. The pilot hole will be logged using a geophysical tool which will provide a suite of logs consisting of gamma, single point resistance, spontaneous potential, neutron and deviation. In some cases, AUC will not include the neutron log if the pilot hole shows signs of caving or instability. The grade and depth of each mineralized intercept will be provided by the log;
  2) To complete the well, the pilot hole will be reamed to a diameter of eight to 10 inches (a minimum of three inches greater than the nominal OD of the casing) to a maximum depth of 15 feet below the bottom of the mineralized

zone. The pilot hole below the bottom of the reamed hole will be filled with drill cuttings during the reaming process. In some cases the ream hole may be drilled and logged without a pilot hole being drilled first. PVC casing with a nominal OD of 5.0 to 6.6 inches will be placed in the reamed hole to a depth approximately 10 feet below the mineralization. Centralizers will be placed on the casing string at a maximum spacing of one per 40 feet. Also, a wooden dowel or bolt will be placed through the casing approximately three feet from the bottom to act as a stop;

3) A specified volume of cement slurry calculated to fill the annular volume and mixed to approved specifications will be pumped inside the casing through a cementing head. Once the cement is in place, a cement wiper plug will be placed in the top of the casing. A volume of displacement water will then be pumped into the casing forcing the cement slurry out of the bottom of the casing and up the annulus between the casing and the reamed hole. Once the wiper plug reaches the wooden dowel or bolt in the bottom of the casing displacement of the cement will end and the valve on the cementing head will be closed which will hold the cement in place while the cement cures. The use of a wiper plug cleans the cement slurry from the inside of the casing and assures that the cement will not be over displaced by providing a surface indication (increased pressure reading) of when the cement job is complete. The well annulus will be topped off with cement to the surface prior to reentry by the drill rig;

4) After the cement is allowed to cure, the well will be under-reamed through the mineralized zones to a diameter of nine to 14 inches, depending on the OD of the casing. The under-reaming will be completed by a specialized tool utilizing retractable blades. The blades are closed for the trip down the well and are opened by pressure from the rig mud pump. After under-reaming the designated zone through the casing and cement, the blades are again retracted for the trip out of the well. The well may be caliper logged as necessary to verify the correct interval has been opened.

   If deemed necessary, to support sand zones that are not competent, a well screen will be telescoped into the casing covering the under-reamed zone. The uppermost screen openings will be placed below the top of the under-reamed interval and below the bottom of the annular seal. A PVC riser pipe will be attached to the top of the screen and will be held in place by one or more k-packer(s). Gravel pack sand may be placed between the screen and the under-reamed hole or a natural gravel pack will be emplaced while the well is being developed;

5) The well will be developed (see Section 3.1.3.2) to remove contaminants and fines from the drilling and completion process and maximize the flow rate. A

well completion form will be completed documenting all of the details on drilling, completion materials, casing depth, completion interval, and the cement mix;

6) After drying, the drill cuttings contained in the pits will be covered with subsoil and the stockpiled topsoil. The ground surface will then be re-contoured and reseeded; and

7) The well will then be integrity tested as discussed in Section 3.1.3.4 below.

- **Method 2** (Figure 3-2)

1) A pilot hole 5.0 to 6.5 inches in diameter will be drilled through the projected completion interval. The pilot hole will be logged using a geophysical tool which will provide a suite of logs consisting of gamma, single point resistance, spontaneous potential, neutron and deviation. In some cases, AUC will not include the neutron log if the pilot hole shows signs of caving or instability;

2) The hole will be reamed to a diameter of eight to 10 inches (a minimum of three inches larger than the nominal casing OD) to the top of the zone to be completed. The pilot hole below the bottom of the reamed hole will be filled with drill cuttings during the reaming process;

3) PVC casing (minimum rating of SDR17) with a nominal OD of 5.0 to 6.6 inches will be placed in the reamed hole. Centralizers will be placed on the casing string at a maximum spacing of one per 40 feet;

4) A specified volume of cement slurry calculated to fill the annular volume and mixed to approved specifications will be pumped inside the casing through a cementing head. A calculated volume of displacement water will be pumped into the casing forcing the cement slurry out of the bottom of the casing and up the annulus between the casing and the reamed hole until the cement reaches the surface. The amount of displacement water used will leave approximately 15 feet of the cement slurry in the casing to prevent over displacement. After displacing the cement, the valve on the cementing head will be closed, which will hold the cement in place while the cement cures;

5) After the cement has cured, the cement will be drilled out of the casing and the designated completion interval will be cleaned out below the casing. The well annulus will be topped off with cement to the surface prior to reentry by the drilling rig. If the sand zone is competent, the completed interval may be left open and unsupported. If a well screen is deemed necessary due to an incompetent sand interval, then a screen assembly will be installed. In some wells, under-reaming of the completed interval to a larger diameter may be completed prior to the installation of the screen. The uppermost screen openings will be placed below the bottom of the casing and the annular seal.

A PVC riser pipe will be attached to the top of the screen and will be held in place by one or more k-packer(s). Gravel pack sand may be placed between the screen and the under-reamed hole or a natural gravel pack will be emplaced while the well is being developed;

6) The well will be developed to remove contaminants and fines from the drilling and completion process and maximize the flow rate. A well completion form will be completed which documents the details on drilling, completion materials, casing depth, completion interval, and the cement mix; and

7) After drying, the drill cuttings contained in the pits will be covered with subsoil and the stockpiled topsoil. The ground surface will then re-contoured and reseeded.

- **Method 3** (Figure 3-2)

1) A pilot hole 5.0 to 6.5 inches in diameter will be drilled to the top of the projected completion interval. The pilot hole will be logged using a geophysical tool which will provide a suite of logs consisting of gamma, single point resistance, spontaneous potential, neutron and deviation. In some cases, AUC will not include the neutron log if the pilot hole shows signs of caving or instability;

2) The hole will be reamed to a diameter of eight to 10 inches (a minimum of three inches larger than the nominal casing OD). An option for this method is to drill to the final hole diameter of eight to 10 inches in one pass followed by the geophysical logging;

3) PVC casing (minimum rating of SDR17) with an OD of 5.0 to 6.6 inches will be placed in the reamed hole. Centralizers will be placed on the casing string at a maximum spacing of one per 40 feet;

4) A specified volume of cement slurry calculated to fill the annular volume and mixed to approved specifications will be pumped inside the casing through a cementing head. A calculated volume of displacement water will be pumped into the casing forcing the cement slurry out of the bottom of the casing and up the annulus between the casing and the reamed hole until the cement reaches the surface. The amount of displacement water used will leave approximately 15 feet of the cement slurry in the casing to prevent over displacement. After displacing the cement, the valve on the cementing head will be closed which, will hold the cement in place while the cement cures;

5) After the cement has cured, the designated completion interval will be drilled below the casing with a bit that is smaller than the casing inside diameter (ID). The well annulus will be topped off with cement to the surface prior to reentry by the drill rig. Geophysical logs consisting of gamma, single point resistance, spontaneous potential, neutron and deviation then will be completed in the

newly drilled hole. If the sand zone is competent, the completed interval may be left open and unsupported. If a well screen is deemed necessary due to an incompetent sand interval, then a screen assembly will be installed. In some wells, under-reaming of the completed interval to a larger diameter may be completed prior to the installation of the screen. The uppermost screen openings will be placed below the bottom of the casing and the annular seal. A PVC riser pipe will be attached to the top of the screen and will be held in place by one or more k-packer(s). Gravel pack sand may be placed between the screen and the under-reamed hole or a natural gravel pack will be emplaced while the well is being developed;

6) The well will be developed to remove contaminants and fines from the drilling and completion process and maximize the flow rate. A well completion form will be completed which documents all the details on drilling, completion materials, casing depth, completion interval, and the cement mix; and

7) After drying, the drill cuttings contained in the pits will be covered with subsoil and the stockpiled topsoil. The ground surface then will be re-contoured and reseeded.

- **Method 4** (Figure 3-2)

1) A pilot hole 4.5 to 6.5 inches in diameter will be drilled through the projected completion interval. The pilot hole will be logged using a geophysical tool which will provide a suite of logs consisting of gamma, single point resistance, spontaneous potential, neutron and deviation. In some cases, AUC will not include the neutron log if the pilot hole shows signs of caving or instability;

2) If necessary, the hole will be reamed to a diameter of a minimum of three inches larger than the nominal casing OD through the zone to be completed. The pilot hole below the bottom of the reamed hole will be filled with drill cuttings during the reaming process;

3) Schedule 40 or Schedule 80 PVC glue belled casing will be placed in the reamed hole with the screen attached to the bottom of the casing. Centralizers will be placed on the casing string at a maximum spacing of one per 40 feet. The casing type and diameter will be determined for each well based on the type and location of each well;

4) A silica sand filter pack will be will be emplaced by free fall or tremie pipe, based on hole conditions, with periodic depth tagging to ensure complete emplacement to a minimum of 3 feet above the top of the screen. Approximately three feet of finer grained sand will be placed in the annulus by free fall or tremie pipe on top of the filter pack sand. The purpose of this sand is to prevent bentonite from being forced into the screened zone during

hydration of the bentonite pellets. Coated bentonite pellets will be emplaced by free fall or tremie pipe on the top of the sand filter pack to an approximate thickness of five feet;

5) A specified volume of cement slurry calculated to fill the annular volume and mixed to approved specifications will be pumped through a tremie pipe upward from the top of the bentonite chip seal to the surface. The cement will be topped off at the surface following the removal of the tremie pipe;
6) The well will be developed to remove contaminants and fines from the drilling and completion process and maximize the flow rate. A well completion form will be completed which documents the details on drilling, completion materials, casing depth, completion interval, and the cement mix; and
7) After drying, the drill cuttings contained in the pits will be covered with subsoil and the stockpiled topsoil. The ground surface will then re-contoured and reseeded.

All methods described above are in accordance with WDEQ/LQD Chapter 11 Rules and Regulations. The specifications embodied in Chapter 11 have been previously proposed by Moore Ranch, Nichols Ranch and Hank, and Lost Creek Projects, and have had such specifications accepted by NRC in their license approvals.

3.1.3.2 Well Development

Immediately following well completion, the well is developed by air lifting, swabbing or other accepted development techniques. Well development removes water and drilling fluids from the casing, by flushing it with water from the screened interval. Wells will be developed to allow representative samples of groundwater to be collected for monitor wells, and to ensure efficient injection and recovery operations from the production wells.

Final development of monitor wells will be performed by pumping the well, swabbing, or bailing for the amount of time necessary, to ensure that stable formation water is present. Conductivity, turbidity, and pH measurements will be taken on the development water during this process to ensure that development activities have been effective. The field parameters must be stable at representative formation values before baseline sampling will commence.

During operation, injection or recovery wells may be taken off-line for maintenance and additional development which commonly use a swabbing technique but could also include airlifting or chemical treatment. Examples of chemicals used for enhancement include a weak acid solution to dissolve calcite or sodium hypochlorite (bleach) to eliminate bacteria.

3.1.3.3 Well Mechanical Integrity Testing

Prior to being placed into operation and after well completion, the integrity of the injection and recovery wells will be verified by a pressure based mechanical integrity test. Mechanical integrity testing (MIT) is required by State and Federal UIC Programs and the NRC. NUREG-1569, NUREG-1910 GEIS and EPA guidance (Geraghty and Miller 1980) address MIT for injection wells.

MIT is conducted by placing inflatable packers near the top of the casing and directly above the riser pipe connected to the screen interval. Packers are inflated and the interval between packers is filled with water and pressurized to the test pressure (120 percent of the maximum allowable injection pressure). A well should maintain 90 percent of this pressure for 10 minutes to pass the MIT.

An alternative to using a top inflatable packer may be utilized. Instead of an inflatable packer, the top of casing may be sealed by a specially designed flange top. A well integrity record will be completed for each tested well. If a well shows an unacceptable pressure drop during MIT, packers may then be reset and the equipment checked for leaks. If in successive tests the well passes integrity requirements, the well will be deemed acceptable for use as an injection or recovery well.

The maximum allowable injection pressure will be based on the formation fracture pressure. Per Nichols Ranch NRC prepared Safety Evaluation Report (SUA-1597), AUC noted that the approved formation fracture pressure is 0.8 psi/ft. Since the Nichols Ranch Project will be conducting uranium recovery operations in the same formation (Eocene Wasatch Formation) as AUCs Proposed Project, AUC will utilize the same value of 0.8 psi/ft as the formation fracture pressure. Due to the variable depth to ore in the PZA across the extent of the Proposed Project, AUC proposes calculating a maximum injection pressure for each header house. This will be based on the average bottom screen interval depth in each house rather than calculate an average for the Proposed Project. AUC expects the bottom screen depths to range from a minimum of 250 feet below ground surface (bgs) to 400 feet bgs based on current drill hole data. At these depths, AUC calculates that the maximum allowable injection pressures will range from 90 to 145 psi across the extent of the project area.

If a well casing does not pass MIT, the well casing will be repaired, if possible, and re-tested. If it is determined that the well cannot be repaired it will be plugged and abandoned. Once a well has been repaired and passes the MIT, it will be placed in its intended service. The WDEQ/LQD will be notified in the event a well fails the MIT, and will only be placed in service once the well successfully passes the MIT and upon approval from the LQD Administrator.

In addition to the initial testing completed during installation, an MIT will be conducted on the well after any work that involves a down-hole drill bit or under-reaming tool being used in the well. Any well with evidence of suspected subsurface damage will require an MIT prior to the well being returned to service. In accordance with WDEQ requirements, MITs will be repeated once every five years for all injection and recovery wells. Well integrity information will be documented and filed on site and subsequently provided to WDEQ/LQD on a quarterly basis.

3.1.4 ISR Process

The ISR process to be used at the proposed Reno Creek Project involves two separate, but related processes. These processes include an ISR process and a recovery process. The ISR process is accomplished by installing a series of injection and recovery wells. Utilizing those injection wells, a leaching solution composed of carbonate/bicarbonate and oxidant or barren lixiviant is injected into the ore body. To promote flow across mineralized areas, corresponding recovery wells are used to pump water from the ore body, and allow for the collection of the uranium-bearing carbonate/bicarbonate leach, or pregnant lixiviant, which is then pumped to the CPP.

During any operation where these injection fluids are utilized, excursion control must be demonstrated. Recovery fluids are normally maintained in the production aquifer within the immediate vicinity of the wellfield. A ring of encircling monitor wells is used to monitor for production fluids migrating from the production area due to a fluid pressure imbalance if one occurred. Such a system has been proven to function satisfactorily over many years of operating experience with uranium in situ uranium recovery operations. More specific details regarding monitor wells and excursions are discussed in Sections 3.1.5 and 3.1.6, respectively.

Once the pregnant lixiviant reaches the CPP, the uranium is removed from the lixiviant through use of pressurized down-flow IX columns utilizing resin that has an affinity for the uranium complex. Once resin in an individual IX column can no longer hold additional uranium ion complexes, resin from that vessel is moved to another vessel where uranium ion complexes are eluted from the resin. After an elution process is complete, resin is moved back into the ion exchange column and re-introduced to the IX process. After lixiviant has passed through the IX circuit, the solution is re-fortified with carbonate/bicarbonate and oxidant making barren lixiviant, which is then recycled to injection wells for further production.

The second process is further refinement of the uranium-rich solution to create a marketable yellowcake product. This is accomplished by precipitating dissolved uranium out of the eluent solution, dewatering the uranium solids, then vacuum drying the

uranium slurry. The dried uranium product, yellowcake, is then packaged to allow safe transportation utilizing NRC-approved carriers.

3.1.4.1 Lixiviant

The lixiviant is production solution used to solubilize uranium from the ore deposit. Composition of the lixiviant is designed to reverse natural geochemical conditions that originally deposited the uranium. The Proposed Project will use a bicarbonate lixiviant consisting of varying concentrations and combinations of sodium carbonate (Na_2CO_3), sodium bicarbonate ($NaHCO_3$), carbon dioxide (CO_2) and an oxidant added to the native groundwater to promote dissolution of uranium to form a uranyl carbonate complex. The bicarbonate portion of the lixiviant will be made up on a batch basis in the CPP and will be added to the injection stream (barren lixiviant). The oxidant will be added downstream of the CPP at individual header houses. Expected or typical lixiviant composition is shown in Table 3-1.

As discussed in Section 2.7.2 of this TR, approximately 70 percent of the PZA is fully saturated with groundwater with the remaining 30 percent partially saturated. AUC will use either a gaseous oxidant, a liquid oxidant, or a combination of gaseous and liquid oxidants, depending on which portion of the PZA is undergoing uranium recovery operations.

AUC will use gaseous oxygen as a primary oxidant during uranium recovery operations in fully saturated portions of the Proposed Project area. AUC does not expect oxygen degassing issues in the fully saturated portion of the PZA since these same conditions exist at currently operating ISR facilities and they are successfully operating with oxygen. Consistent with known aquifer conditions and industry practice, AUC anticipates to start with a maximum concentration of approximately 400 mg/L of oxygen for new wellfields. However, AUC will not know the concentration of oxygen that can be applied until uranium recovery operations actually begin. Concentration of oxygen will be determined operationally. AUC will monitor injection wells to determine the most efficient and effective concentration of oxygen for each wellfield.

AUC understands that adding oxygen to injection wells in partially saturated portions of the PZA will be based on hydraulic head above the ore body. Based on this concept AUC will limit the concentrations of gaseous oxygen to the injection wells located in the partially saturated PZA on what the aquifer can retain without degassing oxygen. The loss of oxygen into the formation would be a waste of reagent and could cause a loss of injectivity through the process of gas locking.

Gas locking can occur when hydraulic head in an aquifer is low enough to allow dissolved oxygen to come out of solution before it chemically reacts with minerals in

solution or in the sandstone matrix. A partial, or complete, gas lock at or near an injection well will be easily identified due to reduced flow or flow blockage within the well. Personnel will observe a significant decrease in injection flow capacity of the well at the normal, or even the maximum allowable, well head injection pressure.

Remedial action will involve attempting to bleed excess gas from the well head to identify if it is only the well that is locked. If bleeding the gas off the well does not work, that well will then be removed from service, a submersible pump will be installed, and the well will be pumped to stimulate the movement of any gas back to the well. Gas will escape from the recovery zone in the form of two phase flow, through the submersible pump and associated piping. These fluids will be routed either to the recovery system, or to the wastewater disposal system. Oxygen is soluble in water, up to its solubility limit. As fluid is "back flowed" to the subject well, unsaturated waters will effectively push the gas, and also reduce the amount of gas as oxygen dissolves into the unsaturated groundwater.

As an alternative to using gaseous oxygen in partially saturated portions of the PZA, AUC is investigating the use of liquid oxidants. Liquid oxidants that AUC is considering include but are not limited to sodium chlorate and hydrogen peroxide. Hydrogen peroxide was used successfully in Rocky Mountain Energy's Pilot Plant located within the partially saturated portion of the PZA. Sodium chlorate is considered a liquid oxidant since it is very miscible in water. Liquid oxidants are advantageous since they will not evolve oxygen as a gas thus eliminating potential for gas locking. Regardless of the oxidant chosen AUC will implement proper safety procedures for storage and use of the chemical. Also, AUC will use the SERP process to allow usage of the oxidant at the Proposed Project if the oxidant is not included in this application.

3.1.4.2 ISR Chemistry

Chemistry of in situ recovery involves an oxidation step to convert uranium in the solid state to a form that is easily dissolved by the lixiviant. The reactions representing these steps at a neutral or slightly alkaline pH are:

Oxidation: $UO_{2\,(solid)} + O_{2\,(in\ solution)} + 2H^+ \longrightarrow UO_{3\,(at\ solid\ surface)} + H_2O$

Dissolution: $UO_3 + 2\,HCO_3^{-1} \longrightarrow UO_2(CO_3)_2^{-2} + H_2O$

$UO_3 + CO_3^{-2} + 2HCO_3^{-1} \longrightarrow UO_2(CO_3)_3^{-4} + H_2O$

The principal uranyl carbonate ions formed as shown above are uranyl dicarbonate, $UO_2(CO_3)_2^{-2}$, (UDC), and uranyl tricarbonate $UO_2(CO_3)_3^{-4}$, (UTC). Relative abundance of each is a function of pH and total carbonate strength.

3.1.4.3 Uranium Recovery

The Proposed Project will recover uranium by passing pregnant lixiviant through a series of pressurized, down-flow IX columns. The uranium will be removed from the pregnant lixiviant by loading onto a strong base, IX resin within the IX vessel. The barren lixiviant leaving the ion exchange columns will then be refortified and re-injected into the wellfield. This loading process is represented by the following chemical reaction:

$$2\ R\ HCO_3 + UO_2(CO_3)_2^{-2} \longrightarrow R_2UO_2(CO_3)_2 + 2HCO_3^{-1}$$

$$2\ RCl + UO_2(CO_3)_2^{-2} \longrightarrow R_2UO_2(CO_3)_2 + 2Cl^{-}$$

$$R_2SO_4 + UO_2(CO_3)_2^{-2} \longrightarrow R_2UO_2(CO_3)_2 + SO_4^{-2}$$

As shown in the reaction, loading of the uranium complex results in simultaneous displacement of chloride, bicarbonate or sulfate ions.

3.1.5 Wellfield Design

AUC anticipates that injection/recovery well patterns will follow the conventional 5-spot pattern, consisting of a recovery well surrounded by four injection wells (see Figure 3-3). However, depending on ore configuration, more or fewer injection wells may be associated with each recovery well. As depicted in Figure 3-3, dimensions of the patterns vary depending on configuration of the mineralized zone, ore grade and accessibility, but the injection wells typically will be between 75 and 120 feet apart. Monitor well spacing of 500 feet shown in Figure 3-3 is typical spacing for the fully saturated portion of the PZA. For the partially saturated portion of the PZA AUC expects to use 400 foot spacing from the outer edge of the production unit and 400 foot spacing between monitor wells. AUC had Petrotek Engineering Corporation (Petrotek) develop a numerical groundwater flow model to evaluate the response of the PZA to hydraulic stresses imposed by operation of the Proposed Project. A result of the flow model evaluation indicates that these monitor well spacing distances are sufficient to detect potential lateral excursions. The Groundwater Flow Model Report is included as TR Addendum Section 2.7-C and discusses monitor well spacing in more detail. In order to recover uranium effectively, and to complete groundwater restoration, all production wells will be completed so that they can be used as either injection or recovery wells.

During ISR operations, a slightly greater volume of water will be recovered from the PZA than is injected, to create a flow gradient inward toward the Production Units. AUC commits to maintaining an inward flow gradient for each Production Unit until groundwater restoration stability monitoring begins. The difference between the amount of water recovered and injected is the wellfield “bleed”. Minimum bleed rate is anticipated to be approximately 0.5 percent of the total production unit recovery rate and

maximum bleed rate typically will be approximately 1.5 percent. Bleed rate will be adjusted as necessary to ensure that inward flow gradient is maintained. Another result of the numerical groundwater flow model indicates that an average production bleed rate of one percent will be sufficient to maintain an inward gradient in both the fully and partially saturated portions of the PZA during uranium recovery operations. The numerical groundwater flow model is discussed in more detail in Section 2.7 of this TR and is included as Addendum 2.7-C.

Injection and recovery feeder pipelines will convey injection and recovery solutions between the main trunk lines which deliver solutions to and from the CPP and the header houses. These pipeline junctions will be contained in valve manholes, located along the trunk lines. Each header house will have the capability of being isolated from the trunk lines by manually operated valves within valve manholes.

In order to transfer injection and recovery solutions to and from individual wells, each header house will have an injection and recovery manifold which are connected to respective feeder pipelines. Injection or recovery wells will be connected to either the injection or recovery manifold through individual meter runs. A meter run will have a control valve and a flow meter in order to control the flow of each injection or recovery well. AUC anticipates each header house will contain between 15 to 30 recovery wells and 25 to 50 injection wells depending on the design of each wellfield. In addition to equipment noted above, header houses will also include shut-off valves, pressure gauges, booster pumps where necessary, and an oxygen or liquid oxidant system connection for incorporation of the oxidant into the injection solution, if required. Figure 3-4 illustrates the piping of a typical header house. An estimated 67 header houses are planned for the Proposed Project.

Wellfield piping will be constructed of HDPE, PVC, and/or steel. Wellfield piping will be designed based on calculated maximum flows and operating pressures during wellfield design. Minimum pressure rating of the wellfield piping will be 160 psi since AUC has calculated a maximum injection pressure of 145 psi as previously discussed in TR Section 3.1.3.3.

Monitor wells will be placed in each of the Production Units, and will include both interior and exterior wells. Interior monitor wells will be located within the wellfield boundaries and will be screened in the Overlying Aquifer above the confining PZA aquitard to monitor potential vertical movement of in situ recovery fluids. Each Production Unit will also be surrounded by an exterior monitor well ring to monitor for the potential lateral movement of the in situ recovery fluids beyond the wellfields. The screened interval of these exterior monitor wells will be in the PZA. All monitor wells will be completed using the well completion methods discussed in Section 3.1.3.1, and will be developed prior to use. The monitor well ring for a typical Production Unit is shown in Figure 3-3.

Based on the numerical groundwater flow model, a bleed rate of approximately one percent from the PZA is anticipated during full scale operations. Also, as demonstrated from the numerical groundwater flow model, this amount of consumptive use will generate negligible drawdown outside of wellfield areas. As a result, no potential impact to other users of groundwater in the area is expected since there is minimal use of groundwater in the recovery zone sands near or adjacent to the wellfield areas. For the same reasons, no potential impacts to water users outside of the Proposed Project boundary are expected. Potential impacts to groundwater from consumptive use are discussed in detail in Section 4.4.2 of the ER. Furthermore, testing by the Bureau of Land Management in the western portion of the Proposed Project area has demonstrated that the operation of Coal Bed Methane (CBM) production wells in the area (which lie approximately 600 feet deeper than the PZA) have not had any measurable effect on aquifers overlying the production coal seams.

Design, completion, testing, and operation of injection and recovery wells are subject to the UIC program regulated by EPA or a State with "primacy" under the Safe Drinking Water Act (SDWA). In the case of the Proposed Reno Creek Project, ISR injection and recovery wells are permitted as Class III injection wells through WDEQ-LQD. Class III injection wells are defined by EPA as solution Mining Wells (e.g., salt, copper, and uranium ISR recovery techniques). Wells are constructed and approved by EPA and/or approved State programs. The methods and materials to construct injection and recovery wells are in accordance with EPA's requirements for Class III injection wells found in 40 CFR Part 146 and WDEQ-LQD Rules and Regulations, Chapter 11. AUC will obtain a Class III UIC permit for such wells from the State prior to commencing operations.

3.1.6 Wellfield Operational Monitoring

As discussed in Section 5.7.8 of this TR, an extensive groundwater sampling program will be conducted prior to, during and following ISR recovery operations to identify any potential impacts to water resources in the area. The groundwater monitoring program is designed to establish baseline groundwater quality prior to ISR operations; detect any potential excursions of lixiviant either horizontally or vertically outside of the recovery zone during active ISR; and determine when the groundwater in the PZA has been restored adequately following ISR operations.

Injection and recovery well flow rates will be monitored at each header house so that injection and recovery can be balanced for each pattern and each wellfield. Recovery flow rates will always be greater than injection rates to establish the bleed rate to maintain an inward gradient for each Production Unit. The flow rates of each injection and recovery well will be monitored continuously through the use of individual electronic flow meters, which are located in the wellfield header house controlling those wells. In addition, pressure gauges will be installed to measure pressures for each of the injection

and recovery wells. Pressure of injection and recovery manifolds will be monitored at each header house with electronic pressure transducers. Flow meters and pressure transducers will be electronically connected to the header house control unit, which will be in constant communication with process monitoring and control systems in the CPP control room.

High and low pressure along with flow rate alarms will be in place to alert wellfield and plant operators if manifold pressures or flow rates associated with wells in a particular header house are operating outside of acceptable operating parameters. In conjunction with the alarm system, pumps in each recovery well will be automatically shut off and automatic valves on injection and recovery manifolds will be directed to close to stop the flow of injection and recovery solutions to and from the wells if significant changes in manifold pressures occur. This action will isolate the header house from the rest of the production circuit to prevent or limit a possible spill in the wellfield.

The oxidant system (liquid or gaseous) in each header house will have a control valve that will automatically close and shut off flow of oxidant to injection wells in the event of injection flow shutdown.

Redundancy is built into the system by monitoring flows and pressures. For example, one of the manifold valves does not close properly, the control unit will identify this by continuing to register either flows to individual wells or pressure on the manifolds. The control unit will further alert the CPP and wellfield operators of this condition.

The header house control unit will be connected to the CPP through either a hard wired communication cable such as fiber optics or through use of a telemetry system. The control unit in each header house will consist of a programmable logic controller (PLC), a smart logic controller (SLC) or a distributed control system (DCS). In the event of an upset condition in a header house, a control unit will identify the header house and alert CPP operators by causing an alarm to sound within the CPP. CPP operators will alert a wellfield operator of the upset condition. As a backup to this alarm system, each control unit will be programmed to transmit a text message to each wellfield operator. AUC will have two CPP operators on site 24 hours a day, while wellfield operators will work 8 hour shifts. If a header house alarm sounds during the night shift, a CPP operator will respond to the alarm.

An operator will inspect the header house to determine the cause of shut down and repairs will be initiated. Based on determination of the shut down and if the ongoing repairs do not affect the safe operation of the header house, all or a portion of the header house wells will be restarted. In addition to the instrumentation monitoring system, operators will perform daily inspections of header houses and wellfield areas to ensure that systems are operating properly and to detect leaks.

To control the movement of lixiviant within the ore zone, a small percentage of barren lixiviant will continuously be diverted away from the volume being pumped back to the injection wells, resulting in more lixiviant being pumped from the production zone than injected. This bleed will create an inward gradient within the production zone, causing groundwater from the surrounding area to be drawn toward the wellfield. Inward gradient will contain lixiviant within the ore-bearing region of the production zone, preventing lixiviant from migrating away from the wellfield, and minimize dilution of lixiviant by uncontrolled fluid movement.

The groundwater monitoring program at the Proposed Project will be designed to detect excursions of lixiviant from a Production Unit during uranium recovery or groundwater restoration operations laterally or into the Overlying Aquifer. There will be a minimum of one overlying monitor well per four acres in each Production Unit. After baseline water quality is established for monitor wells for a particular Production Unit, Upper Control Limits (UCLs) are set for chemical constituents which will be indicative of a migration of lixiviant from the Production Unit. Constituents chosen for indicators of lixiviant migration and for which UCLs will be set are chloride, conductivity, and total alkalinity. These constituents are used as excursion indicators for nearly all currently licensed and operating ISR facilities. Chloride is chosen due to its low natural levels in native groundwater and because chloride is introduced into the lixiviant from the ion exchange process. Chloride also is a very mobile and persistent constituent in groundwater and will show up very quickly in the case of a lixiviant migration to a monitor well. Conductivity is chosen because it is an excellent general indicator of overall groundwater quality. Total alkalinity concentrations should be affected during an excursion as bicarbonate is the major constituent added to the lixiviant during ISR operations. UCLs will be set by analyzing the data using EPA's ProUCL program for each excursion indicator.

The currently proposed excursion indicator parameters will be adequate to identify that the groundwater quality at a monitor well may have been affected from ISR operations. See TR Section 5.7.8 for a detailed discussion on indicator parameters of a potential excursion. During routine sampling, if two of the three UCL values are exceeded in a monitor well, an excursion is deemed to have occurred. According to NUREG-1569, Section 5.7.8.3 (Criterion 5), a series of sampling events must occur to verify the excursion event. A more detailed discussion on excursion monitoring, corrective action, and reporting can be found in Section 5.7.8 of the TR.

3.1.7 Water Balance

Uranium recovery at the Proposed Project will consist of three operational phases, which include a production-only phase, a concurrent production and groundwater restoration phase, and a groundwater-restoration-only phase. The following section presents

proposed process flow rates for each phase. Liquid waste disposal flow rates and waste management facility capacities are discussed in Section 4.3.6 of this TR.

The production-only phase is defined as the time period in which only Production Units recovering uranium are online. This time period will be during the first one to three years of the project, depending on the rate at which the first Production Unit is developed. A water balance flow chart for the production only phase is included as Figure 3-5. The water balance represents the maximum recovery flow rate of 11,000 gpm with an average bleed rate of one percent.

During the early stages of development of Production Unit 1, flow rate will be less, building up to a maximum of 11,000 gpm over time. Pregnant lixiviant will flow through pressurized, down-flow IX columns; the resulting barren lixiviant will be refortified with oxidant and bicarbonate/carbon dioxide and re-injected. A portion of the barren lixiviant will be transferred as a slip stream to a Reverse Osmosis (RO) unit. Throughout the production phase, AUC will use an RO unit to optimize the Total Dissolved Solids (TDS) in solution within the production stream and to reduce the volume of waste water generated. The present conceptual design calls for a nominal 250 gpm RO unit to be fed from the barren lixiviant stream. The RO unit will be designed to produce a 165 gpm permeate stream and an 85 gpm brine stream. However, the RO unit will be equipped to produce alternate flow rates for permeate and brine streams as conditions warrant. Permeate flow stream will be split between the injection flow stream and CPP process make-up water. As shown in Figure 3-5, permeate is added to the barren lixiviant stream at an average flow rate of 140 gpm, which represents an average bleed rate of one percent. However, this permeate addition rate will be adjusted to increase or decrease percent bleed as necessary during operations. The remainder of the permeate flow, approximately 25 gpm will be used for CPP make up water. Brine from the RO unit as well as waste water from the CPP and wellfield processes will be sent to the waste water tanks from which the waste water will be pumped to the DDWs.

An excursion is a condition that may warrant an increase in bleed rate, while loss of flow to a DDW may necessitate operating at a decreased bleed rate. By employing an RO unit in the production process, AUC will recycle more water, significantly reducing the amount of waste water produced and decreasing the amount of makeup water input into the system through the CPP. The excess permeate replaces the additional make-up water required from the CPP water supply well by as much as 25 gpm. As an example in Figure 3-5, if the RO unit is not used, then the direct bleed from the lixiviant stream will be 110 gpm and the process make-up water for the CPP will be 25 gpm from the CPP water supply well. The resulting waste water stream will be 140 gpm. With the RO unit in place as shown in Figure 3-5, the resulting waste water stream will be 115 gpm.

Concurrent production and groundwater restoration phase will occur when Production Units begin groundwater restoration while other Production Units continue to extract

uranium. A water balance flow chart for the concurrent production and groundwater restoration phase is shown in Figure 3-6. The production flow reflects the maximum recovery flow rate of 11,000 gpm and average bleed rate of one percent. Groundwater restoration is discussed in detail in Section 6.1 of this TR. The only groundwater restoration activities that will generate a waste water stream are groundwater sweep and groundwater treatment. Therefore, these groundwater restoration methods are included in Figure 3-6. In this phase, the production only water balance flow chart remains unchanged. However, restoration pressurized down-flow IX columns, restoration RO units and a secondary set of RO units will be utilized as depicted in Figure 3-6.

The groundwater restoration flow rate will include ~1,000 gpm from wellfields in the groundwater treatment stage, as well as ~50 gpm from wellfields in the groundwater sweep stage. Flows will be combined and will flow through the restoration pressurized down-flow IX columns. Upon exiting the pressurized, down-flow IX columns, ~1,000 gpm will be used to feed the restoration RO units, while the remaining ~50 gpm will be combined with the waste stream from the production circuit (~115 gpm) to feed the secondary set of RO units. Brine from the restoration RO units (~200 gpm) will also be added to the waste water stream that will feed the secondary RO units (~365 gpm). All permeate generated by the restoration (~800 gpm) and secondary (~219 gpm) RO units will be injected into the wellfields undergoing groundwater treatment. By combining the two permeate streams, percent bleed from these wellfields will be reduced to less than 10 percent. This is an important step in controlling groundwater migration within the PZA during this phase of operations. All brine produced from the secondary RO units will be pumped to the DDWs via waste water tanks. Permeate and brine flow rates from restoration and secondary RO units will be able to be reset as operating conditions warrant.

The groundwater restoration only phase will take place when all Production Units have been depleted and only groundwater restoration activities are occurring. A water balance flow chart for the groundwater restoration phase is shown in Figure 3-7. As shown in Figure 3-7 during this phase of operations, the production circuit will be shut in therefore only the CPP and wellfield processes, restoration pressurized down-flow ion exchange columns, restoration RO units and the secondary set of RO units are included in the flow chart. Similar to the concurrent production and groundwater restoration phase the groundwater restoration flow rate will include ~1,000 gpm from wellfields in the groundwater treatment stage, as well as ~50 gpm from wellfields in the groundwater sweep stage. The flows will be combined and will flow through the restoration ion exchange columns. Upon exiting the pressurized, down-flow ion exchange columns, ~1,000 gpm will be used to feed the restoration RO units, while the remaining ~50 gpm will be combined with the brine from the restoration RO units (~200 gpm) and CPP and wellfield process waste water (~10 gpm) to feed the secondary RO units (~260 gpm). All the permeate generated by the restoration (~800 gpm) and secondary (~156 gpm) RO units will be injected into the wellfields undergoing groundwater treatment. During this

phase of operations, AUC expects the CPP process waste water to decrease due to the lower number of elutions and uranium precipitation due to a significant decrease in the pounds of uranium recovered.

3.1.8 Wastewater Disposal Capacity

The AUC waste water management system will include up to four Class I Deep Disposal Wells (DDW) and a backup storage pond to temporarily store waste water as needed. The DDWs, which are being permitted in the Cretaceous Teapot and Parkman sandstones, will be the primary waste water disposal option. AUC has researched ISR DDWs permitted in the Teapot and Parkman sandstones within the Powder River Basin and found that the actual injection rates for these wells ranges from 30 to 50 gpm. More detailed discussion regarding byproduct material management can be found in Section 4.3 of this TR.

AUC has provided a water balance for the Proposed Project in TR Section 3.1.7 which includes the maximum expected waste water flow rates during the three operational phases of the facility. The maximum predicted waste water flow rates are 115 gpm during the production only phase, 146 gpm during the production and groundwater restoration phase, and 104 gpm during the groundwater restoration only phase.

Based on a review of available data, and given that stimulated completion methods will be employed, it is reasonable to predict that sustained rates on the order of 30-50 gpm could be attained. Since AUC will install up to four DDWs, even at mid-range of actual injection capacity of 40 gpm, AUC will have the waste water disposal capacity necessary for each of the three operational phases. As displayed in Table 4-4 of this TR, injection capacities of newly installed or stimulated wells appear to be largely related to injection pressure. Further discussion of the DDWs is provided in Section 4.3.6.2 of this TR.

AUC will install a backup storage pond to temporarily store waste water which will provide excess waste water capacity during the time a DDW is offline. The pond will be installed to provide redundancy in the waste water management system and is not intended to be used to transfer waste water to the DDWs on a daily basis. Waste water will be transferred directly from the waste water storage tanks in the CPP to the DDWs during normal operations. AUC has calculated the maximum waste water flow that will need to be diverted to the pond while one DDW is off line to be 26 gpm. This is based on a maximum waste water flow rate of 146 gpm and three DDWs operating at 40 gpm (146 gpm – 120 gpm = 26 gpm).

AUC will design the backup waste water pond to have a capacity of approximately 525,000 gallons. The pond will provide fourteen days of excess waste water capacity (26 gpm x 14 days x 1440 min). Once the DDW is back on line, the waste water added to the

back-up pond will be drained to the DDWs. The design of the backup pond is discussed in TR Section 4.3.5. AUC has set aside an area within the site layout to install an optional backup storage pond of identical design if warranted (TR Figure 3-1).

3.1.9 Pore Volume Calculation

This section describes the method used to estimate a typical Production Unit (PU) pore volume (PV). A pore volume is a term used by the ISR industry to define an indirect measurement of a unit volume of aquifer affected by ISR operation or restoration (ISR GEIS). The PV calculation includes site-specific measurements of ore zone thickness and porosity and an estimate of horizontal and vertical flare supported by the Numerical Groundwater Flow Model developed for the Proposed Project and included in Addendum 2.7-C of this TR.

Production Unit pore volumes are determined using the following equation:

$$PV = A \times T \times FF \times P \times CF$$

Where:

A = production unit pattern area (square feet)
T = average completed thickness (feet)
FF = flare factor (unit less)
P = effective porosity (percent)
CF = conversion factor (7.48 gallons/ft^3)

3.1.9.1 Average Completed Thickness

The "average completed thickness" in the pore volume equation is the average screened interval of the production wells for uranium recovery operations. This value will be determined following the installation of each production unit.

3.1.9.2 Production Zone Porosity

AUC collected core samples from the Production Zone Aquifer (PZA). Analysis of a core sample from hole RC0007C determined the effective porosity of the PZA is 23.7 percent (Table 2.6A-3 of Section 2.6 of this TR). AUC will use 24 percent as the site-specific porosity factor for the PV calculation.

3.1.9.3 Flare Factor Values

Horizontal and vertical flare factors are used to estimate the volume of groundwater affected beyond the edge of the PU patterns by dispersion of the lixiviant. These flare factors are expressed as percentages of the PU pore volume contained within the pattern areas. AUC has prepared a numerical groundwater flow model (TR Addendum 2.7-C) to determine the horizontal flare factor for the fully saturated and partially saturated portions of the PZA.

The groundwater flow model calculated a 14 percent horizontal flare factor for the fully saturated portion of the PZA and a horizontal flare factor of 15 percent for the partially saturated portion of the PZA. AUC recognizes that the modeling calculations assume (1) homogeneous isotropic conditions, (2) exact well spacing, and (3) perfect balance during operations. AUC proposes increasing the calculated horizontal flare factors to 20 percent each in order to account for slight variations from these model assumptions. Although not simulated in this model, it is assumed that the vertical flare factor will be similar. The final "flare factor" value used in the pore volume equation is determined by multiplying the horizontal and vertical flare factor values (1.2 x 1.2). AUC will use 1.44 as the "flare factor" value in the PV equation for PUs located in the fully and partially saturated portion of the PZA.

This flare factor is consistent with other licensed ISR facilities within the Powder River Basin. The Moore Ranch Uranium Project used a combined horizontal and vertical flare factor of 1.5 (Safety Evaluation Report for the Moore Ranch ISR Project in Campbell County, Wyoming, Materials License No. SUA-1596) The Nichols Ranch ISR Project used a combined horizontal and vertical flare factor of 1.45 for its surety estimate (Safety Evaluation Report for the Nichols Ranch In Situ Recovery Project in Johnson and Campbell Counties, Wyoming Materials License No. SUA-1597).

3.2 Central Processing Plant, Processing, and Chemical Storage

This section describes the proposed CPP facilities and details specifications that will be utilized for the Proposed Project. CPP facilities typically include the following major structures: a CPP building housing the uranium processing equipment, drying and packaging equipment, groundwater restoration water treatment equipment, and on-site laboratory; a warehouse and maintenance building; and reagent and liquid materials storage tanks and hoppers. The proposed CPP will contain various vessels to hold and process liquid solutions. The primary vessels will include pressurized, down-flow IX columns, elution columns, and yellowcake drying equipment. The main plant will contain tanks for storage of various liquids including bicarbonate make-up, eluants, yellowcake precipitation, and washing, dewatering, process chemicals, and yellowcake slurry. A conceptual general arrangement of the components of the CPP is illustrated in Figure 3-8.

Designated areas will also be provided for hydrocarbon storage (fuel, oil, etc.) and hazardous waste storage (used oil, etc.).

3.2.1 Central Processing Plant Equipment

AUC proposes to construct and operate a single CPP within the Proposed Project area. Based on preliminary site evaluation, the proposed CPP will be located in the SENE quadrant of Section 1, T42N, R74W. This property, including the current residence, will be acquired by AUC prior to the commencement of construction. The proposed CPP will be housed in a building approximately 350 feet long by 200 feet wide. The size of the building will be refined during the process of detailed engineering design; however the CPP will include the following circuits and systems:

- Pressurized down-flow IX;
- Resin transfer;
- Chemical addition;
- Filtration;
- Elution;
- Precipitation;
- Product filtering, dewatering, vacuum drying, and packaging;
- Liquid byproduct stream;
- Groundwater restoration ; and
- Backup generator.

The following sections will provide a description of each processing system and the equipment and materials used. A complete process flow diagram which shows process flows and equipment is shown in Figure 3-9.

3.2.1.1 Ion Exchange Circuit

AUC will utilize pressurized down-flow IX columns. The uranium-bearing solution, or pregnant lixiviant, recovered from the wellfield will be piped to the pressurized down-flow IX circuit in the CPP for extraction of the uranium using specialized IX resin. With this ion exchange circuit the ^{226}Rn present in the lixiviant is forced back underground in re-fortified groundwater which thereby provides for significantly reduced potential for occupational and/or public exposure to ^{226}Rn and its progeny. More specific emission details are discussed in Sections 4 and 7 of this TR.

NUREG-1910 notes pressurized down-flow IX circuits contain most of the ^{226}Rn present in the lixiviant. Thus, use of this type of IX circuit allows for more effective control of

^{226}Rn which will only be released during resin transfer and routine maintenance. Use of a pressurized, down-flow IX system enables AUC to control where the ^{226}Rn can go during maintenance and resin transfer, in turn allowing for a reduction in ^{226}Rn emissions relative to other available IX technologies. Use of this type of system also represents a specific emission control method which reduces emissions to levels that are as low as reasonably achievable (ALARA) and complies with requirements of 10 CFR Part 40, Appendix A, Criterion 8. Use of engineering controls, such as pressurized, downflow IX columns, along with independent tank and area ventilation systems will ensure that exposures to ^{226}Rn and its progeny are maintained ALARA. Vents on individual IX vessels are connected to a manifold which is exhausted outside the CPP in the event small amounts of ^{226}Rn are released.

These columns will be operated in series as pairs to allow one column to be in lead position and one in tail position. This will allow the column in tail position to be placed in lead position once the original lead column is taken off-line for resin transfer. Resin will be transferred to an elution tank, where it will be stripped, and then transferred back to a pressurized down-flow IX column. AUC expects to use 22 IX columns loaded with 500 ft^3 of resin for uranium recovery operations, with each paired set of columns taking 1,000 gpm of flow resulting in a max CPP throughput of 11,000 gpm. However, final engineering design may include the use of columns that accept a greater throughput, but the maximum CPP throughput will not exceed 1000 gpm.

An additional set of IX columns will be used for restoration purposes only. As pregnant lixiviant passes through the IX system, the uranyl dicarbonate and uranyl tricarbonate ions will be removed preferentially from the lixiviant. Barren lixiviant leaving the IX circuit will normally contain less than two mg/l of uranium. After barren lixiviant leaves the IX circuit, CO_2 and/or carbonate/bicarbonate will be added as necessary to refortify the barren lixiviant with the carbonate/bicarbonate concentration desired for recovery operations. Barren lixiviant will then be pumped back to the wellfields, with an oxidant added before the solution is re-injected into the PZA.

3.2.1.1.1 Ion Exchange Circuit Equipment

Materials of construction and general specifications for the pressurized, down-flow IX circuit equipment are listed below. Detailed specifications and dimensions will be addressed during detailed engineering.

- Ion Exchange Columns: The ion exchange columns are pressurized downward-flow vessels constructed of mild steel with an epoxy internal coating. Internal distribution headers are constructed of 316SS steel; and
- Booster Pumps: Booster pumps are standard pumps of steel construction.

3.2.1.2 Elution Circuit

Once resin in an IX vessel is fully saturated with uranium, or loaded, resin will be transferred by a pumping system to the elution circuit. The elution circuit will consist of multiple elution vessels and multiple elution tanks. The process will be a batch system consisting of three stages. The different stages will all perform similar functions, but vary the concentration of uranium in the solution. Eluant will be washed over the resin in each stage, producing a concentrated solution for each batch. In the elution circuit, loaded resin will be stripped of uranium by a process based on the following chemical reaction:

$$R_2UO_2(CO_3)_2 + 2Cl^- + CO_3^{-2} \longrightarrow 2\,RCl + UO_2(CO_3)_3^{-2}$$

For this three-stage elution process, the first stage will involve the passing of a pregnant eluant through the elution vessels, washing through IX resin. The pregnant eluant will already contain a moderate amount of uranium, but will still remove a considerable amount of uranyl carbonate ions from the resin. After pregnant eluant has passed through the loaded resin, it will be transferred to the precipitation process. The second stage will involve identical steps, but will use an intermediate eluant solution. Intermediate eluant will be passed through the vessel to remove additional uranyl carbonate ions from the resin in the same manner as the previous stage. After passing through the resin, intermediate eluant will be transferred to the pregnant eluant tank. Barren eluant will then be passed through the resin to remove any remaining uranyl carbonate ions from the resin in the same manner as the previous two stages. After passing through the resin, the barren eluant will then be transferred to the intermediate eluant tank. Resin will then be rinsed with barren water or barren lixiviant, and the resin will be transferred back to an IX column for reintroduction to the pressurized down-flow IX column circuit. The final wash water will be transferred to the barren eluant tank, additional water will also be added as necessary, and will then be refortified with NaCl and Na_2CO_3 to make-up a new batch of barren eluant.

3.2.1.2.1 Elution Circuit Equipment

Materials of construction and general specifications for the elution circuit equipment are listed below. Detailed specifications and dimensions will be addressed during detailed engineering.

- Elution Vessels: Elution vessels are typically constructed of mild steel with an epoxy internal coating. Elution vessels will operate in up flow mode and are vented;
- Eluant Tanks: Eluant tanks are typically constructed of mild steel with 316SS steel agitators. They are enclosed, agitated, and vented; and

- Vibrating Resin Screen: The screen is typically constructed of 304SS and uses a mesh style vibration screen to separate water from loaded resin before it is transferred to the elution vessel.

3.2.1.3 Precipitation Circuit

When a sufficient volume of pregnant eluant has been produced, the solution will be moved to a precipitation tank. The precipitation process consists of multiple stages, the first of which is the addition of a strong mineral acid, to reach an approximate pH of 2 to cause the uranyl carbonate complex ion to break down, liberating carbonate ions as carbon dioxide. The solution will be agitated to assist in removal of the resulting CO_2. The process can be represented as follows:

$$UO_2(CO_3)_3^{-4} + 6H^+ \longrightarrow UO_2^{++} + 3\,CO_2\uparrow + 3H_2O$$

Once the pH required to release carbonate ions is achieved, a short delay for degassing will be initiated, to allow all of the carbon dioxide to come out of solution. The second stage is to add sodium hydroxide, causing the pH rise to a level conducive for selective precipitation of uranium crystals.

The third stage is to add hydrogen peroxide to the solution to precipitate uranium according to the following reaction:

$$UO_2^{++} + H_2O_2 + 2H_2O \longrightarrow UO_4 \bullet 2H_2O + 2H^+$$

The fourth stage is a combination of the second and third stage, as the addition of hydrogen peroxide will lower the pH of precipitation solutions. Therefore, during the addition of hydrogen peroxide, sodium hydroxide must also be added to keep pH in the correct range for selective precipitation of uranium crystals.

Once the total volume of hydrogen peroxide has been added, precipitated uranyl peroxide slurry will be pH adjusted, allowed to settle, and the clear solution decanted. Decant solution could be re-circulated back to the barren eluant makeup tank, sent to fresh salt brine makeup, or sent to waste. Thickened uranyl peroxide slurry will be further dewatered and washed in a filtration system specifically designed for dewatering solids. Solids will then be sent to the vacuum dryer for drying and packaging prior to shipping.

3.2.1.3.1 Precipitation Circuit Equipment

Materials of construction and general specifications for the precipitation circuit equipment are listed below. Detailed specifications and dimensions will be addressed during detailed engineering including the use of a thickener and/or additional tank.

- Precipitation Tanks: Tanks are covered, agitated, and vented fiber reinforced plastic (FRP) tanks with mid-tank agitator suspension;

3.2.1.4 Yellowcake Drying and Packaging System

After thickening, yellowcake will be pumped into a plate and frame filter press for additional dewatering and washing. Yellowcake will be washed by pumping fresh water through solids in the filter press, in order to remove excess chlorides and other soluble materials from the yellowcake. Uranium filtercake will drop from the filter press, through a grizzly to break up any large lumps, and into a hopper that has a shaftless auger mounted underneath. The shaftless auger aids in breaking up any lumps, and moves the uranium filtercake to a smaller, secondary hopper attached to a positive displacement pump. The positive displacement pump transfers the yellowcake to an oil-heated, rotary vacuum dryer. Water will be added to the uranium filtercake in the hopper and shaftless auger to create a slurry which will facilitate pumping the solids to the vacuum dryer.

Yellowcake slurry will be dried at temperatures typically ranging from 165°F to 190°F, depending on the amount of vacuum that is achieved inside the vacuum dryer. Once free water molecules have been removed, the vacuum dryer will be heated up to no more than 450°F to remove some of the molecules of hydration, but not hot enough to change chemical composition of the yellowcake. Gases generated during the drying cycle will be filtered through a baghouse, which will be located on the top of the vacuum dryer, to remove particles down to approximately one micron. Gases will then be cooled in a surface condenser to further remove smaller size particulates and water vapor created during the drying process.

According to NUREG-1910 (GEIS Section 2.4.2.3), vacuum dryers have several advantages especially with regard to controlling the process and yellowcake dust emissions. This GEIS section is specific by stating the vacuum dryer heating system is isolated from yellowcake so no radioactive materials are entrained in either the heating system or its exhaust. The drying chamber containing yellowcake slurry is under vacuum; therefore, any potential leak would cause air flow back into the chamber. The entire process is designed to capture virtually all escaping particles. (Mackin et. al, 2001)

Two rotary vacuum dryers and baghouses will be located in an enclosed area within the CPP. The remainder of process equipment will be located outside of the dryer room, and will include a surface condenser, vacuum pumps, condensate receiver tank, a cooling tower, cooling water transfer pumps and oil heaters. Vacuum dryers will be approximately 20 feet in length and five feet in diameter. Dryers will be heated with a heat transfer fluid (HTF) which circulates through the shell of the vacuum dryer and is capable of safely handling the maximum heat used in the process. To facilitate even drying of solids, dryers will have an internal system which will stir and mix yellowcake.

Liquid ring vacuum pumps will provide the vacuum source from the time the dryer is being loaded through the time the yellowcake is packaged into drums. This zero emission dryer system is shown in Figure 3-10.

The packaging system will be operated on a batch basis. Dried yellowcake will be removed from the rotary vacuum dryer by passing through a plug valve on the bottom of the dryer, through a sealed hopper, then through an airlock into 55-gallon steel drums. Drums will be placed under a hood for drum loading, which will also use the vacuum system to achieve a positive seal between the hood and drum. The vacuum will also act to clear the air between the hood and drum from fine, airborne particles and will be connected to the vacuum system before the condenser. These particles will be trapped in the filter between the packaging hood and vacuum system, or in the condenser, condensate tank or liquid seal of the vacuum pump if passing the filter.

3.2.1.4.1 Uranium Drying and Packaging Equipment

Materials of construction and general specifications for the yellow cake drying and packaging circuit are listed below. Detailed specifications and dimensions will be addressed during detailed engineering.

- Vacuum Dryer: It will consist of a horizontal 316 stainless steel vessel heated externally and fitted with rotating plows to stir the yellowcake. The chamber will have a top port for loading wet yellowcake and a bottom port for unloading dry powder. A third port will be provided for the venting through the baghouse during the drying procedure. The dryer will be rated for full vacuum at the maximum process temperature;
- Baghouse: This air and vapor filtration unit will be mounted directly onto the dryer so that any dry solids collected on the filter surfaces, could be discharged back to the drying chamber while under vacuum to maintain negative pressures in the drying chamber. The filter house will be able to be heated to prevent condensation of water vapor during the drying cycle. It will also be kept under negative pressure by the vacuum system;
- Condenser: This unit will be located downstream of the baghouse and be water cooled. It will be used to condense the water vapor from the gases coming from the drying chamber. The gases will be moved through the condenser by the vacuum system. Any particles that might pass through the filter will be wetted and entrained in the condensate moisture within this unit, and deposited in the condensate tank for recycling;
- Vacuum Pump: The vacuum pump will be a liquid ring pump specifically designed for vacuum service. This pump will provide a negative pressure on the entire system during the drying cycle. It will also be used to provide negative

pressure during transfer of the dry powder from the drying chamber to 55 gallon drums. The water seal of the rotary vacuum pump will capture entrained particulate matter remaining in the gas streams, which will be recycled back into the process;

- Packaging: The packaging system will be operated on a batch basis. The dried yellowcake will be removed from the rotary vacuum dryer by passing through the plug valve on the bottom of the dryer, through a sealed hopper, then through an airlock into 55-gallon steel drums. The drums will be placed under a hood for the drum loading, which will also use the vacuum system to achieve a positive seal between the hood and the drum. The vacuum will also act to clear the air between the hood and the drum from fine, airborne particles and will be connected to the vacuum system before the condenser. These particles will be trapped in the filter between the packaging hood and the vacuum system, or in the condenser, condensate tank or liquid seal of the vacuum pump if passing the filter;
- Heating: The heat for drying will be supplied by indirectly heated HTF oil based, heat transfer fluid. The drying will be accomplished at temperatures of approximately 450°F, and at pressures less than atmospheric. The heaters will require a fresh air intake due to the possibility of the plant atmosphere being at a lower pressure than atmosphere, for efficient combustion;
- Effluent Monitoring: The vacuum pump exhaust will be piped back into the dryer room, but since it utilizes a liquid seal to create the vacuum, it is unlikely that solid particles will be able to be exhausted. Water that is collected from the condenser will be recycled to the precipitation system, eluant makeup or disposed with other process water. Room air will be monitored routinely for airborne uranium particles;
- HEPA Filtration: A HEPA filtration unit will be utilized in the dryer room to filter the air in the dryer room if the potential for airborne uranium particles exist. This unit will draw air from within the dryer room, pass that air through the HEPA filter then discharge that air back into the dryer room. An air conditioning unit may be added to this system if the temperatures created in the dryer room dictate that it is necessary; and
- Controls: The drying system will have sufficient instrumentation to operate automatically and to shut down automatically if malfunctions such as heating or vacuum system failures occur.

In the rare event that a bag fails during drying operations, it would be possible for uranium particles to pass the baghouse. If this does occur, a sudden drop in differential pressure across the baghouse will be visible on the control system, and will alert the operators. Additionally, the uranium particle(s) that might pass the baghouse would continue through the piping to the surface condenser, along with the steam, where the

steam is condensed to water, likely entraining the uranium in that water. Should the uranium particle not be entrained in water in the surface condenser, it will either fall into the condensate receiver tank, which will also be under vacuum, and be entrained in the water in that tank, or be drawn into the vacuum pump. If drawn into the vacuum pump, uranium must pass through the water in the liquid seal that allows the pump to create a vacuum, and therefore would be entrained in that water. Some water vapor is exhausted by this type of vacuum pump, and a very remote possibility of uranium particles being exhausted is possible. Therefore, the vacuum pump exhaust will be piped back into the dryer room, where airborne monitoring will be taking place. Water used by the liquid ring vacuum pump and water collected in the condensate receiver tank are both recycled into the process.

3.2.1.5 Groundwater Restoration Circuit

AUC will use two stages of RO treatment (primary and secondary as needed), during groundwater restoration to maximize permeate and minimize brine production. The interference from groundwater restoration with ongoing uranium recovery operations will be kept to a minimum by maximizing the quantity of permeate re-injected into wellfields undergoing RO treatment and will hasten the clean-up of the affected groundwater. The restoration circuit will be designed to handle the anticipated flow of 1,050 gpm. Restoration equipment will be housed in the CPP building.

The RO system will consist of two units in series. The first RO unit will operate so as to return approximately 75 to 80 percent of the flow as high quality permeate and 20 to 25 percent of the flow as a concentrated brine solution. Concentrated brine is then pumped to the secondary RO unit which will produce approximately 60 percent permeate and 40 percent brine. Additional feed water to the secondary RO unit may include brine from the production RO unit, CPP process waste water and groundwater sweep fluids. Permeate from each of the RO units will be combined and will be injected into the wellfields undergoing active groundwater restoration.

3.2.1.5.1 Groundwater Restoration Circuit Equipment

Materials of construction and general specifications for the groundwater restoration circuit equipment are listed below. Detailed specifications and dimensions will be addressed during detailed engineering.

- RO Systems: The RO unit and related pumps will be will be constructed of chemically compatible material; and
- Restoration IX Columns: Columns will be constructed of mild steel with an epoxy internal coating. Internal distribution headers are constructed of 316SS steel.

3.2.1.6 Bleed Treatment Circuit

To control the movement of lixiviant within the ore zone, a small percentage of barren lixiviant will continuously be diverted away from the volume being pumped back to the injection wells, resulting in more lixiviant being pumped from the production zone than injected. This bleed will create a negative pressure gradient within the production zone, causing groundwater from the surrounding area to be drawn toward the wellfields. The negative-pressure gradient will contain the lixiviant within the ore-bearing region of the production zone, preventing the lixiviant from migrating away from the wellfields, and minimize the dilution of lixiviant by uncontrolled fluid movement.

It is anticipated that the bleed rates will range from approximately 0.5 percent to 1.5 percent of the recovery flow rate. As discussed in TR Section 3.1.5 the numerical groundwater flow model evaluation indicates that an average production bleed rate of one percent will be sufficient to maintain an inward gradient in both the fully and partially saturated portions of the PZA during uranium recovery operations. Therefore the average bleed will be approximately one percent during uranium recovery operations. As discussed in Section 3.1.7, Water Balance, the wellfield bleed will be removed by processing a portion of the barren lixiviant through the production RO unit. The resulting brine from this RO unit will be piped either to the wastewater tanks or to the feed of the secondary RO unit.

3.2.1.7 Backup Generator

An emergency generator will be installed at the CPP in case of an electrical power outage. The generator will be a fully encased diesel generator that will start automatically when the power goes down. The generator will be sized to support the operation of critical systems needed to maintain a safe work environment within the CPP during the power outage.

3.2.2 Chemical Storage Facilities

The ISR process requires chemical storage and delivery systems to store and use chemicals at various stages in the recovery, processing, and waste treatment processes. Both hazardous and non-hazardous chemicals or materials will be stored at the Proposed Project facilities. Most bulk hazardous chemicals and materials will be stored in specially designed tanks or containers located within secondary containment structures as appropriate outside of the CPP building. The exception is sodium hydroxide which may be stored within the CPP. Other non-hazardous bulk process chemicals and materials that do not have the potential to impact safety may be stored within the CPP building.

Preliminary tank sizing and location can be found in Table 3-2 and Figure 3-8, respectively.

Each chemical storage and delivery system will be designed to safely store and accurately deliver process chemicals to the intended delivery points in the process. All chemical storage tanks will be clearly labeled to identify the contents. Design criteria for chemical storage and delivery systems include applicable regulations of the International Building Code (IBC), National Fire Protection Association (NFPA), Compressed Gas Association (CGA), Occupational Safety and Health Administration (OSHA), Resource Conservation and Recovery Act (RCRA), and the Department of Homeland Security (DHS).

3.2.2.1 Process Related Chemicals

Process-related chemicals stored in bulk at the Proposed Project CPP will potentially include sodium chloride, sodium carbonate, strong mineral acid, sodium hydroxide, hydrogen peroxide, oxygen, and carbon dioxide. Generally, AUC anticipates storing sufficient process related chemicals to permit full production for at least 14 days.

Risk assessments completed by the NRC in NUREG-6733 for in situ recovery facilities identified bulk acid storage as the most hazardous chemicals with the greatest potential for impacts to chemical and radiological safety.

3.2.2.1.1 Sodium Chloride Storage

Sodium chloride will be used to make up the barren eluant and may be stored either in a bulk silo outside the CPP or within the CPP in a brine liquid storage tank. Dry sodium chloride will be delivered by truck and may be blown into the storage silo or tank using air pressure.

3.2.2.1.2 Sodium Carbonate Storage

Sodium carbonate (soda ash) will be used to make up the barren eluant solution and and to produce sodium bicarbonate to refortify the barren lixiviant. It may be stored either in a bulk silo outside the CPP or within the CPP in a liquid storage tank. Dry sodium carbonate will be delivered by truck and may be blown into either the storage silo or tank using air pressure.

3.2.2.2 Acid Storage and Delivery System

The acid storage and distribution systems at the CPP will be monitored closely. Strict unloading procedures will be utilized to ensure that safety controls are in place during the transfer of these acids. Process safety controls also will be in place at the CPP where acid is added to the precipitation system.

Anticipated acid storage should not exceed the screening threshold (11,250 lbs) contained in Appendix A of 6 CFR 27, Chemical Facility Anti-terrorism Final Interim Standards, Department of Homeland Security. As the project is further developed and if it is determined that acid storage will exceed the screening threshold, AUC will undergo screening requirements for any strong mineral acid utilized.

3.2.2.3 Sodium Hydroxide Storage and Delivery System

AUC plans to use a sodium hydroxide (caustic soda) to raise the pH levels during the precipitation phase of the process. The sodium hydroxide storage tank will be appropriately placarded and will be located inside the CPP building in a secondary containment basin designed to contain at least 110 percent of the tank volume. This secondary containment basin will be separate from the containment basins for other chemical systems.

The sodium hydroxide feed pump will be located inside the building, near the storage tank. The 50 percent sodium hydroxide solution bulk tank will be made of materials compatible with the chemical. The bulk tank will vent directly to the atmosphere outside above the CPP. Sodium hydroxide will be transported using conventional PVC piping from the storage vessel to the CPP precipitation tanks.

3.2.2.4 Hydrogen Peroxide Storage and Delivery System

The hydrogen peroxide system will include a storage tank and delivery pump. Hydrogen peroxide will be stored as a 50 percent solution, outside in an above-ground storage tank constructed of compatible material. The hydrogen peroxide storage tank will be located adjacent to the CPP building in the chemical storage area in a secondary containment basin designed to contain at least 110 percent of the tank volume. This secondary containment basin will be separate from the containment basins for other chemical systems. Specifically, the storage tank will be placarded and located a safe distance away from flammable sources, organic materials, and incompatible chemicals to avoid potential adverse chemical reactions. The hydrogen peroxide feed pump will be located inside the building, near the storage tank.

3.2.2.5 Oxygen Storage and Delivery System

Oxygen will be added to the injection stream either upstream of the injection manifolds within the header house buildings or to individual injection well meter runs. Oxygen storage will be placarded and located near the CPP or at centralized position(s) within the Production Units. Each vessel will be equipped with safety relief devices and will be located at least 25 feet from buildings or as required by applicable NFPA and OSHA standards. The storage facility will be designed to meet industry standards in NFPA-502F and OSHA standards for the installation of bulk oxygen systems on industrial premises (29 CFR 1910.104).

Oxygen service pipelines and components must be clean of oil and grease since gaseous oxygen will cause these substances to burn much more rapidly if ignited, as it will any other combustible material. All components intended for use with the oxygen distribution system will be properly cleaned using recommended methods in CGA G-4.1. The design and installation of oxygen distribution systems will be based on CGA-4.4.

3.2.2.6 Carbon Dioxide Storage and Delivery System

The carbon dioxide storage and delivery system will be stored adjacent to the CPP where it may be added to the lixiviant prior to leaving the plant for pH control and for the make-up of sodium bicarbonate for addition to the lixiviant stream.

3.2.2.7 Chemical Reductant

A chemical reductant will be utilized during groundwater restoration. Materials commonly used for restoration at ISR operations include sodium sulfide and hydrogen sulfide. These chemicals decrease the oxidation reduction potential that causes dissolved uranium and other heavy metals to stabilize at acceptable levels. AUC plans on utilizing sodium sulfide rather than hydrogen sulfide for worker safety reasons.

Prior to the use of sodium sulfide as a reducing agent, AUC will implement appropriate engineering controls and employee training to ensure safe storage, handling and use of sodium sulfide. When used, sodium sulfide will be stored at the CPP in a dry, clean, isolated environment.

3.2.2.8 Non-Process Related Chemicals

Non-process related chemicals that may be stored at the CPP site include petroleum products (diesel) and propane. Due to the flammable and/or combustible properties of

these materials, all bulk quantities will be stored outside of process areas at the CPP site. All diesel storage tanks will be located above ground and within secondary containment structures designed to accommodate at least 110 percent of the volume of the largest tank in the containment structure. If the aboveground hydrocarbon storage capacity exceeds 1,320 gallons, AUC will prepare a Spill Prevention, Control, and Countermeasure (SPCC) plan in accordance with EPA requirements in 40 CFR Part 112.

3.2.3 Occupational and Environmental Safety Considerations

3.2.3.1 CPP Gaseous Containment

Potential sources of non-radiological fumes or gases can result from use of process related chemicals. Potential sources of non-radiological fumes or gases will be minimal in the IX area, because the ISR solutions will be maintained under a positive pressure and contained within the process equipment. The area within the plant facility with the greatest potential to generate non-radiological fumes or gases would be the precipitation area. These tanks will be operated with powered ventilation during normal operating conditions to minimize the buildup of fumes. As described above, the primary chemicals used in the precipitation area will be a strong mineral acid, sodium hydroxide and hydrogen peroxide. A description of the preventive/mitigative controls and monitoring for each of these potential chemical fumes is provided in the following:

- Acid Fumes: Acid fumes may be generated from leaks in acid piping or process tanks contained within the processing plant precipitation area. Preventive/mitigation measures will include: construction of all storage tanks, piping, and associated appurtenances in accordance with current industry standards; use of enclosed tanks, limiting the amount of vapors that can escape to the atmosphere; and daily shift inspections of plant and chemical storage facilities. Monitoring may be conducted using colorimetric tubes if it is believed that acid fumes may be present in an area.

  Typically, a specific work permit will be required for maintenance work on tanks, pipes, or equipment that contains or may contain concentrated acid, or for the use of concentrated acid to prepare decontamination or cleaning solutions as required by site industrial safety procedures. Employees who may be exposed to concentrated acid must wear chemical goggles and face shield, chemical suit, and acid resistant gloves. A respirator with an acid cartridge is necessary when fumes may be encountered. An emergency eyewash station will also be maintained near the precipitation area, and throughout the processing plant, in case an employee comes into contact with acid, or acidic solutions.

- Sodium Hydroxide Fumes: Sodium Hydroxide fumes may be generated due to leaks in process tanks or piping contained within the processing plant chemical storage area and the precipitation area. Preventive/mitigation measures will include construction of the storage tank and piping to industry standards for sodium hydroxide, and daily inspection of the chemical storage area and chemical piping system.

  Sodium hydroxide will be stored in an appropriate storage tank. The storage tank will be surrounded by a berm in order to contain and prevent the chemical from coming in contact with an incompatible substance in the event of a tank leak. All chemical handling and accidental release measures will be handled in accordance with the standard MSDS for sodium hydroxide. An emergency eye wash station will be maintained in the immediate area, and throughout the processing plant, in case an employee comes in contact with sodium hydroxide.

- Hydrogen Peroxide Fumes:_Hydrogen peroxide fumes may be generated from leaks in piping and process tanks contained within the proposed CPP precipitation area. Preventive/mitigation measures will include construction of all storage tanks, and associated piping in accordance with current industry standards; enclosure of all tanks, limiting the amount of vapors that can escape to the atmosphere; and daily shift inspections of plant and chemical storage facilities.

  Hydrogen peroxide will be stored in a bulk storage vessel located outside of the building away from any organics or other incompatible substance. Rubber gloves and face shield should be worn when there is any possibility of contact with this chemical. In the event of a spill, ample quantities of water will be used to dilute the spill. An emergency eyewash station will also be maintained near the precipitation area, and throughout the processing plant, in case an employee comes into contact with hydrogen peroxide.

If any of the potential fumes described above are detected, then the process area ventilation will be accomplished using the heating, ventilation, and air conditioning (HVAC) system to draw in fresh air and sweep the plant air out to the atmosphere.

In addition to the fumes described above in the plant area, the potential exists for the buildup of carbon dioxide or oxygen gas, which may occur in confined spaces or low lying areas, such as header houses if carbon dioxide or oxygen lines are present. Procedures will require monitoring for these gases prior to employees conducting work in confined spaces, basements, or other areas where these gases may be present.

3.2.3.2 CPP Liquid Containment

The primary form of containment throughout the processing building is each individual process tank or vessel. Secondary containment will consist of concrete curbing. There are two philosophies used for curbing within the CPP, total containment in the event of tank failure and containment of leaks or spills during operations. Curbing to contain a failed tank will be used in areas that pose a major health risk or potential product recovery; these areas will have curbing to contain at least 110 percent of the volume of the largest tank. Curbing for spill containment only will be employed in areas where it is unnecessary or impractical to contain the total volume of fluid in that area but where it is still desirable to contain spills. The use of sloped floors within designated areas throughout the CPP will direct any spilled/leaked fluid to an appropriate sump to be disposed of or returned to the process. Table 3-2 shows the dimensions and capacities of process vessels and chemical storage tanks.

Sealed sumps will be installed in the floor of the CPP to capture any liquids falling outside the individual tank containment curbing. Materials in the sump may be assessed and disposed of by pumping the liquid into the DDW circuit if the assessment determines that no negative effects will occur, such as plugging, and the material in question is within the disposal requirements of the DDW permit. Liquids that are not appropriate for the DDW system will be either chemically treated to eliminate negative DDW effects prior to pumping into the DDW circuit, or pumped into appropriate storage/transportation containers and disposed at a licensed facility approved to accept wastes exhibiting the characteristics of the liquid.

The CPP building foundation will incorporate a stem wall extending at least 12 inches above finished floor at the base of the building's perimeter. This wall feature will serve as an additional level of containment for the entire building. All concrete surfaces at risk of coming in contact with process fluids or chemical reagents will be sealed with appropriate chemical resistant epoxy coatings. Areas expected to see heavy traffic volume, such as the truck bay, will have a chemical and wear resistant floor coating system. Working in concert with the curbing, the reinforced concrete slab will be sized to minimize (or eliminate) the number of construction or contraction joints necessary and thus will minimize potential leak sites.

AUC commits to recording in the operational record the location and quantity and additional information as warranted for all liquid spills in the CPP and all lixiviant leaks in the production units regardless if it is a reportable quantity or not.

3.3 Satellite Facilities or Other Equivalent Feed

The Proposed Project design will be in accordance with RIS 2012-06 as well as other NRC specifications for purposes of treating equivalent feed from satellite plants, water treatment plants or other allowable sources.

3.4 Instrumentation and Control

3.4.1 Wellfield Operations/Ion Exchange Circuit

The wellfield and IX circuits will operate in a continuous state, and deviations from the normal operating flow rates and pressure profiles (±10 percent or greater) will be indicative of operating upsets. An automatic emergency bypass system or shutdown sequence, consisting of pressure and flow rate monitoring, will be provided for these circuits when normal operating parameters are exceeded. Instrumentation and controls related to these circuits to accommodate emergency bypass systems and alarms are listed below:

- Instrumentation in the CPP control room will be provided to measure recovery and injection flow rates and pressures on the main trunk lines. Flows and pressures will be monitored continuously and will be displayed in the facility control room. These values will also be displayed locally on, or near, the metering instrumentation. An automatic bypass and alarming will be provided for cases when the production process runs outside the operating parameters. This will allow the wellfields to continue running, if desired, while maintenance is accomplished on the sections that require attention; and
- Individual well flows will be adjusted and controlled within the header houses. Manifold pressures inside the header houses will be maintained below maximum operating pressure. Instrumentation will be provided to measure individual well recovery and injection flow rates, as well as the manifold pressures coming into and going out of the individual header houses. Flows and pressures will be monitored continuously and will be displayed locally in the header house. These values will also be displayed in the facility control room. Total recovery and injection flows will be derived from the sum of the individual flows. Flows will also be continuously monitored to trigger and log an alarm in the event set parameters are exceeded. Wellfield header houses will also be equipped with sensors to detect the presence of liquids, thereby initiating alarms. Automatic shutoff valves and alarms will be provided for deviations outside of established operating parameters for the systems controlled within the header house.

In the event of an automatic bypass, an alarm will notify the operator of the situation. Once the upset (broken piping, leaking vessels, etc.) is identified and corrective action

taken, only then can the circuit be manually restarted. This type of control system provides the protection against fluid spills to the environment by limiting the amount of fluid released and providing immediate notification to facility operators, enhancing response to any upset conditions. Back-up for the automatic emergency bypass systems will be provided by local displays and controls for the metering instrumentation or header house displays if systems controls or displays in the CPP should become temporarily unavailable.

3.4.2 Process Areas

All process tank levels will be able to be monitored both locally on the tank and continuously displayed in the facility control room. Areas that require monitoring of pressure, pH levels, and flow rates will also be monitored and will be continuously visible in the facility control room. These measurements will also be displayed locally to provide redundancy where practicable.

For instances where it is crucial that a system run within its design parameters, alarms and automatic shutdown systems will be provided to shut all or part of the system down. The alarms and shutdown systems will aid in alerting the operators of any potential hazards and protecting all workers from possible effects from upset process conditions. The continuous monitoring will also be used to operate the plant process at maximum efficiency.

3.4.3 Yellowcake Drying Systems

Yellowcake drying facilities at the proposed CPP will consist of vacuum dryers. The system will be instrumented sufficiently to operate automatically and to shut itself down in the event of malfunctions such as heating or vacuum system failures. The system will be capable of issuing an audible alarm if there is an indication that the emission control system is not performing within operational specifications or if air pressure falls outside specified levels. In the event an emissions control system instrument fails, the operator will perform and document hourly checks on the emissions control system parameters. Additionally, the operator will perform and document these checks once per shift during normal operations.

Effluent control devices will be operative at all times during drying and packaging operations. Drying and packaging operations will shut down if effluent controls become inoperative. If instrumentation shows that equipment is not operating within the prescribed ranges, then corrective actions will be taken to restore proper operating conditions. If this cannot be accomplished without shutdown and repairs, then drying operations must cease as soon as practicable. Operations will not be restarted after

cessation due to abnormal performance until all needed corrective actions have been completed. Any cessation, corrective actions, and restarts of dryer operations will be reported to the NRC in writing within 10 days of the subsequent restart as required by 10 CFR 40, Appendix A, Criterion 8A. This reporting requirement does not apply to routine maintenance of dryer system components.

3.4.4 Radiological Monitoring Instrumentation

Handheld radiation detection instruments and portable samplers will be used to monitor radiological conditions at the central processing plant. Specifications for this equipment are discussed in further detail in Section 5.7.2 of this document. The location of monitoring points and monitoring frequency for in-plant radiation safety is also discussed in Section 5.

3.4.5 Solid 11e.(2) Byproduct Material Disposal

Solid 11e.(2) byproduct material will be collected and stored within the CPP in appropriate containers (e.g., 55 gallon drums with drum liners). When these containers are full, they will be closed and will be moved to the byproduct storage area and stored in a strong, tight container as defined by DOT regulations. AUC plans to use covered roll-off containers with an approximate capacity of 20 yds^3 each. Once full, these containers will be shipped for disposal to a licensed disposal facility. AUC anticipates generation of approximately 100 yds^3 of solid 11e.(2) byproduct material per year therefore shipping to the licensed 11e.(2) disposal facility five times per year. During storage, the containers will be located within a restricted area. Access to the byproduct storage facility will be controlled through the use of security fencing, locked gates, and proper posting as a restricted area. A more detailed discussion on solid and liquid 11e.(2) byproduct material management and disposal can be found in Section 4.13 of the ER.

Larger items such as contaminated equipment that cannot be stored in a roll-off container will be covered/sealed in manner that will prevent the spread of contamination in the byproduct storage area.

Table 3-1: Typical Lixiviant Concentrations

Parameter	Range (mg/L)	
	Low	High
Na	≤ 400	6,000
Ca	≤ 20	500
Mg	≤ 3	100
K	≤ 15	300
CO_3	≤ 0.5	2500
HCO_3	≤ 400	5,000
Cl	≤ 200	5,000
SO_4	≤ 400	5,000
U_3O_8	≤ 0.01	500
V_2O_5	≤ 0.01	100
TDS	≤ 1,650	12,000
pH	6.0	10.0

* All values in mg/l except pH (units).

NOTE: The above values represent the concentration ranges that could be found in barren lixiviant or pregnant lixiviant and will include the concentration normally found in "injection fluid".

Table 3-2: Proposed Reno Creek Project Tank Sizing Summary

Tank	Number	Diameter (ft)	Height Suggested (ft)	Liquid Volume (ft^3)	Type
IX Column	22	9.5	14.25	-	2:1 elliptical vessel
IX Guard Column	2	9.5	14.25	-	2:1 elliptical vessel
Elution Vessel	2	9.5	14.25	-	2:1 elliptical vessel
Restoration IX	2	9.5	14.25	-	2:1 elliptical vessel
O2	1	Standard 30 ton vertical tank			Horizontal
CO2	1	Standard 50 ton horizontal tank			Horizontal
Barren Eluant	2	14	18	2000	Flat Bottom
Intermediate Eluant	2	14	18	2000	Flat Bottom
Pregnant Eluant	2	14	18	2000	Flat Bottom
Precip Tank	2 or 3	14	18	2030.35	Flat Bottom
Plant Water	2	12	18	1596.88	Flat Bottom
Resin Transfer Water	1	14	18	1500	Flat Bottom
Waste Water	4	14	18	2647.06	Flat Bottom
NaCl BrineMix Tank	1	12	18	1311.71	Flat Bottom
NaCl Silo	1	12	18	1421.21	30° Cone Bottom
Soda Ash Silo	1	16	24	3331.314355	30° Cone Bottom
Soda AshNa2CO3 Mix Tank	1	14	18	1753.15	Flat Bottom
NaHCO3 Mix Tank	1	14	18	1753	Flat Bottom
Soda AshNaHCO3 Storage	1	14	18	1753.15	Flat Bottom
HCl	1	14	18	1753	Flat Bottom
NaOH	1	12	12		Flat Bottom
H2O2	1	9	23' 2.5"		Horizontal
Filter Press	2			91.6592	-
Dryer	2			91.6592	-
Thickener	1 (if used)	38	16	7780.28	30° Cone Bottom

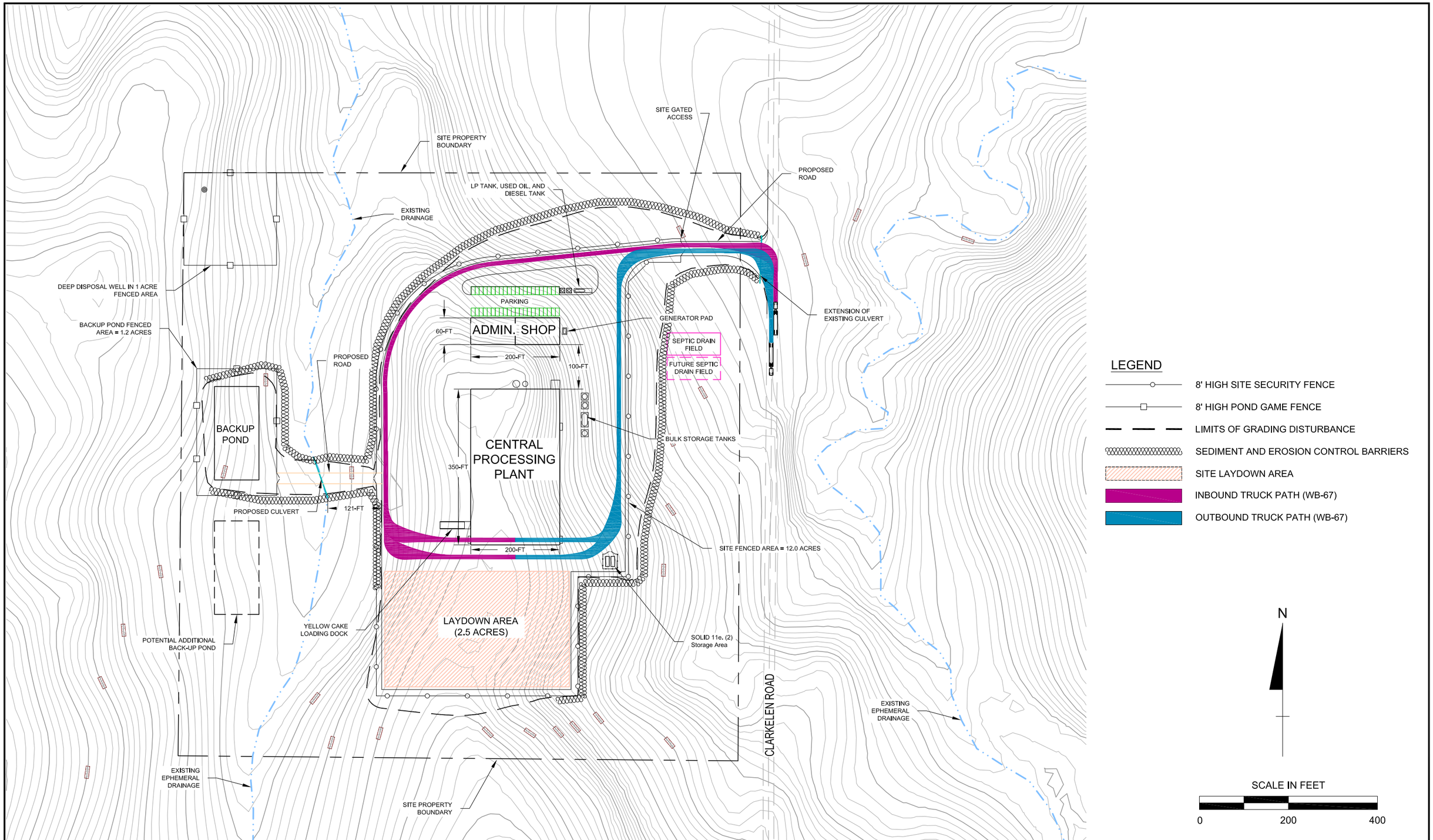

NOTE:
EXISTING CONDITIONS INFORMATION PROVIDED BY SURVEY PERFORMED BY INBERG-MILLER ENGINEERS JUNE 2012

TREC, Inc.
Engineering & Environmental Management
www.treccorp.com

Conceptual Plant Facility Layout
Reno Creek Permit Application
AUC, LLC
Campbell County, Wyoming

FIGURE 3-1

Drawn: TBK	Checked: RL	Approved: DHG

Rev. #	Description	Date
-	-	-
-	-	-
-	-	-

DRAWING: z:\current_projects\2010-100 auc reno creek permit app\cad\figures\2010-107_f031_site_layout.dwg

Print Date: 9/7/2012 12:48 PM

COPYRIGHT 2012, TREC

METHOD 1

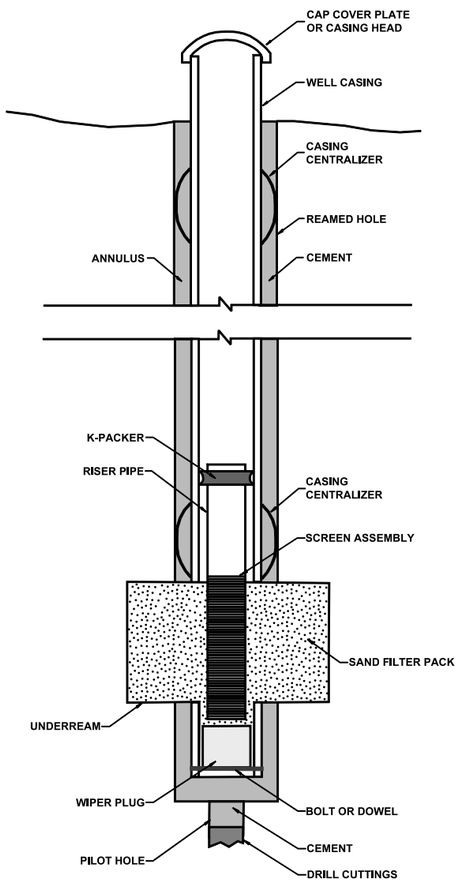

METHOD 2

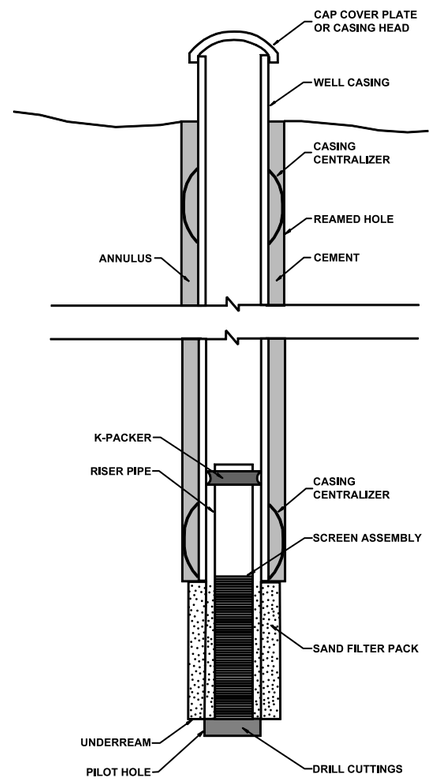

METHOD 3

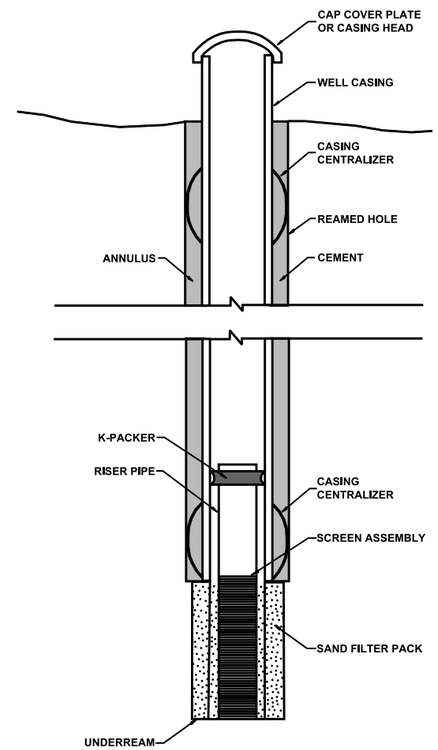

METHOD 4

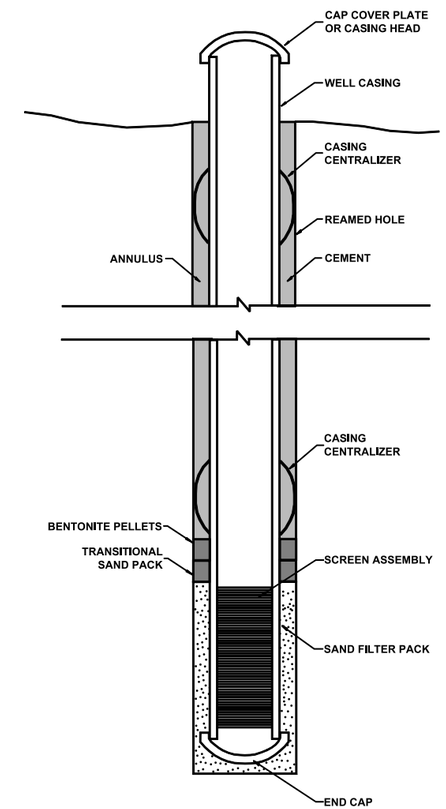

PROPOSED RENO CREEK PROJECT CAMPBELL COUNTY, WY	DRAWN BY: RHK	Proposed Well Completion Methods				
	CHECKED BY: RMD					
AUC LLC LAKEWOOD, CO	APPROVED BY: JEY	REV #	DESCRIPTION	BY	DATE	FIGURE
		0	Draft	RHK	10/05/2011	3-2
		1	Revised Draft for Review	RHK	10/27/2011	
		2	Final	RHK	01/05/2012	

Path: O:\WY_Projects\2010-100_AUC_Reno_Creek\Project_MXD\Submittal\Well Completion.mxd

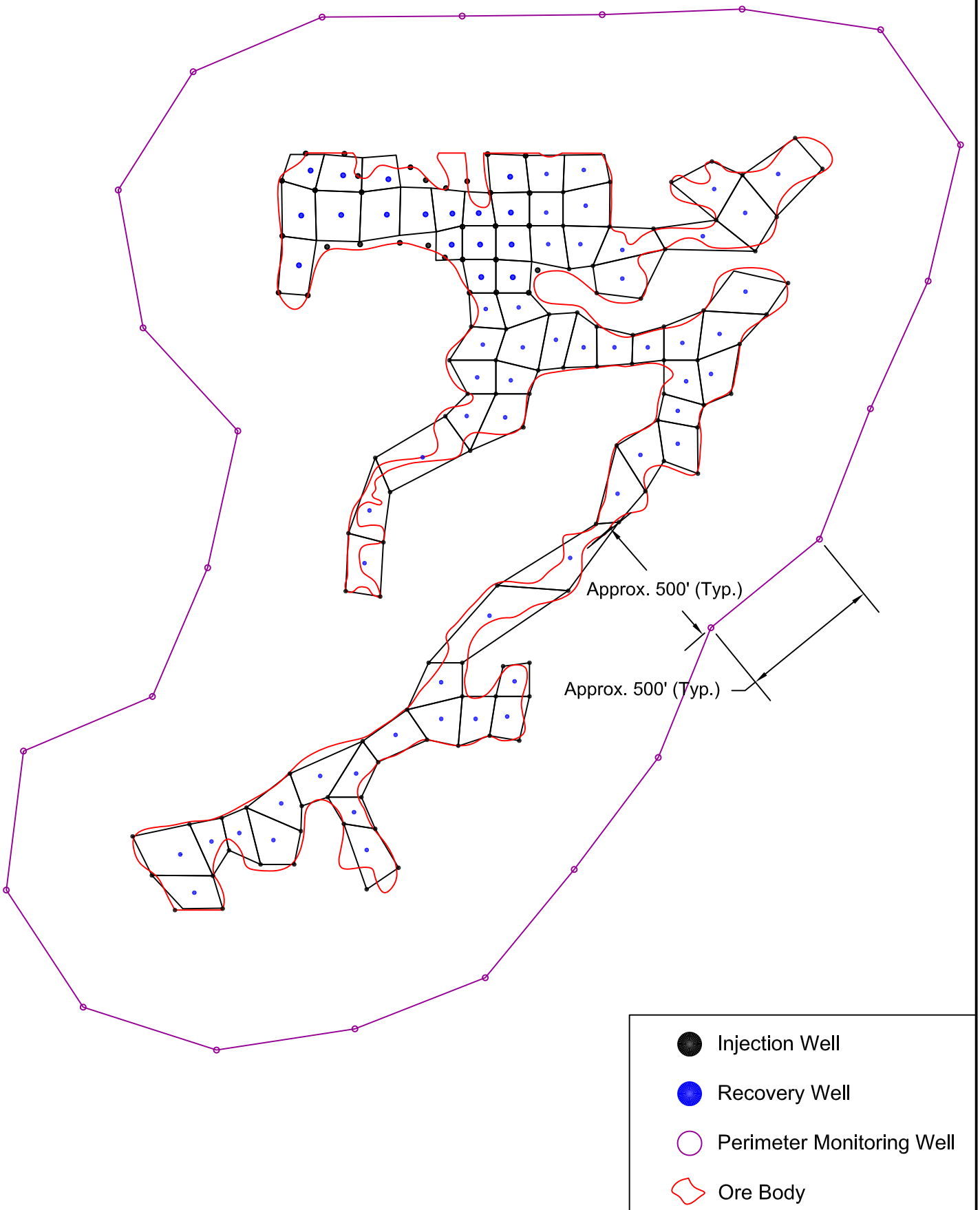

DRAWING: z:\current_projects\2010-100 auc reno creek permit app\cad\figures\00-00-00 submittal type\section 3\2010-100 figure 3-2 typical wellfield pattern.dwg

TREC, Inc.
Engineering & Environmental Management

TYPICAL PRODUCTION UNIT PATTERN
PROPOSED RENO CREEK PROJECT
AUC LLC
Lakewood, CO

Drawn: EM
Checked: RD
Approved: JY

Figure 3-3

Rev. #	Description	Date
0	Initial Draft	01/06/11
1	Final	01/19/12

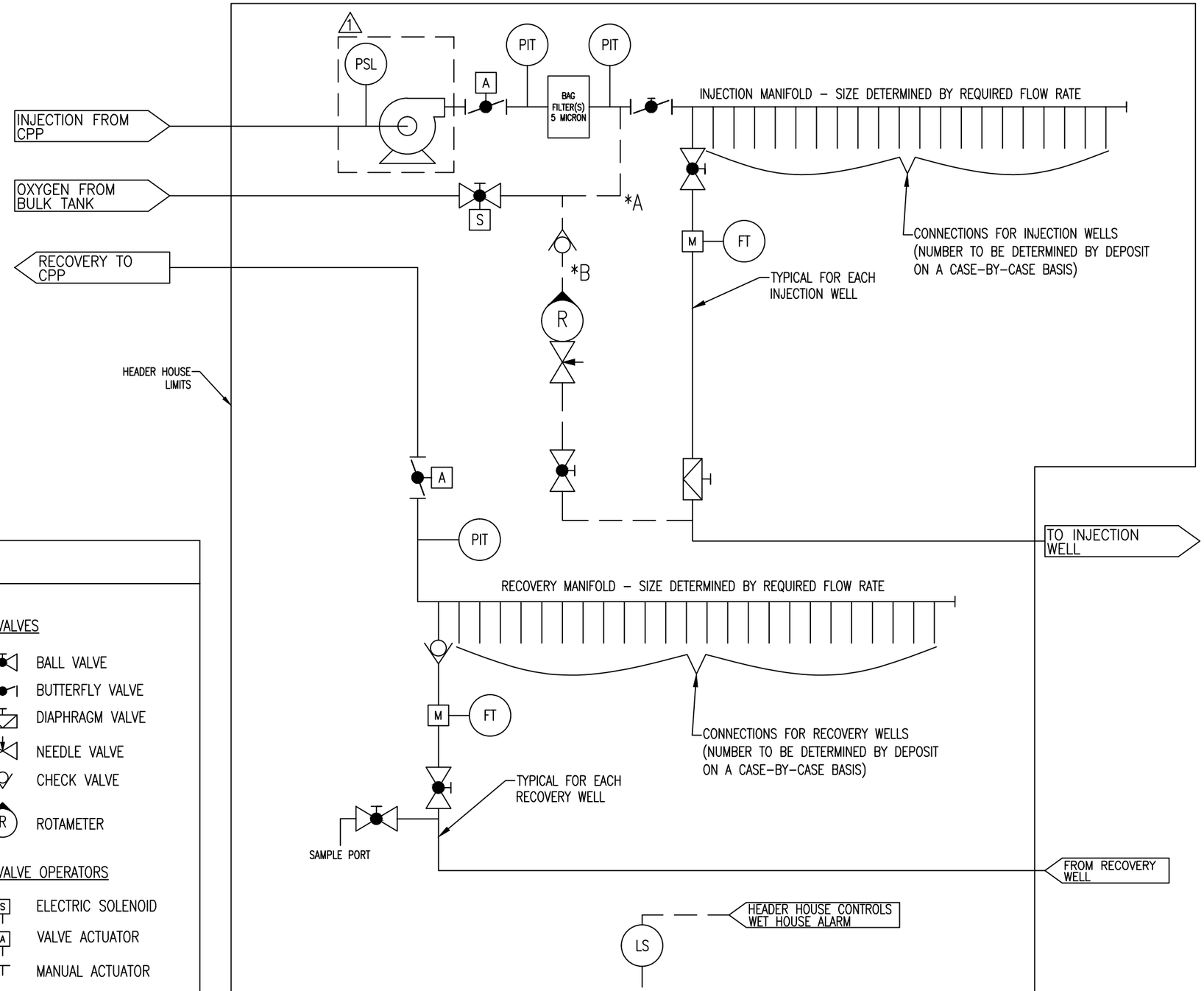

OXYGEN INJECTION OPTIONS
*A – DIRECT INTO INJECTION MANIFOLD
*B – INDIVIDUALLY CONTROLLED INJECTION TO EACH WELL

NOTES:
1 WILL ONLY BE INSTALLED WHEN NECESSARY

LEGEND

TYPE OF CONTROL–INSTRUMENT DIAGRAMS

- PIT PRESSURE INDICATING TRANSMITTER
- PSL PRESSURE SWITCH, LOW
- FT FLOW TRANSMITTER
- LS LEVEL SWITCH
- M MAGNETIC FLOWMETER

VALVES

- BALL VALVE
- BUTTERFLY VALVE
- DIAPHRAGM VALVE
- NEEDLE VALVE
- CHECK VALVE
- R ROTAMETER

VALVE OPERATORS

- S ELECTRIC SOLENOID
- A VALVE ACTUATOR
- MANUAL ACTUATOR

TREC, Inc.
Engineering & Environmental Management
www.treccorp.com

TYPICAL HEADERHOUSE
PROPOSED RENO CREEK PROJ.
AUC, LLC
LAKEWOOD, CO

FIGURE 3-4

Drawn: EM | Checked: BP | Approved: RMD

Rev. #	Description	Date
0	Draft for Review	03/08/12
1	Update for Application	03/23/12
-	-	XXX

DRAWING: TYPICAL HEADERHOUSE

Print Date: 7/23/2012 2:32 PM

COPYRIGHT 2012, TREC

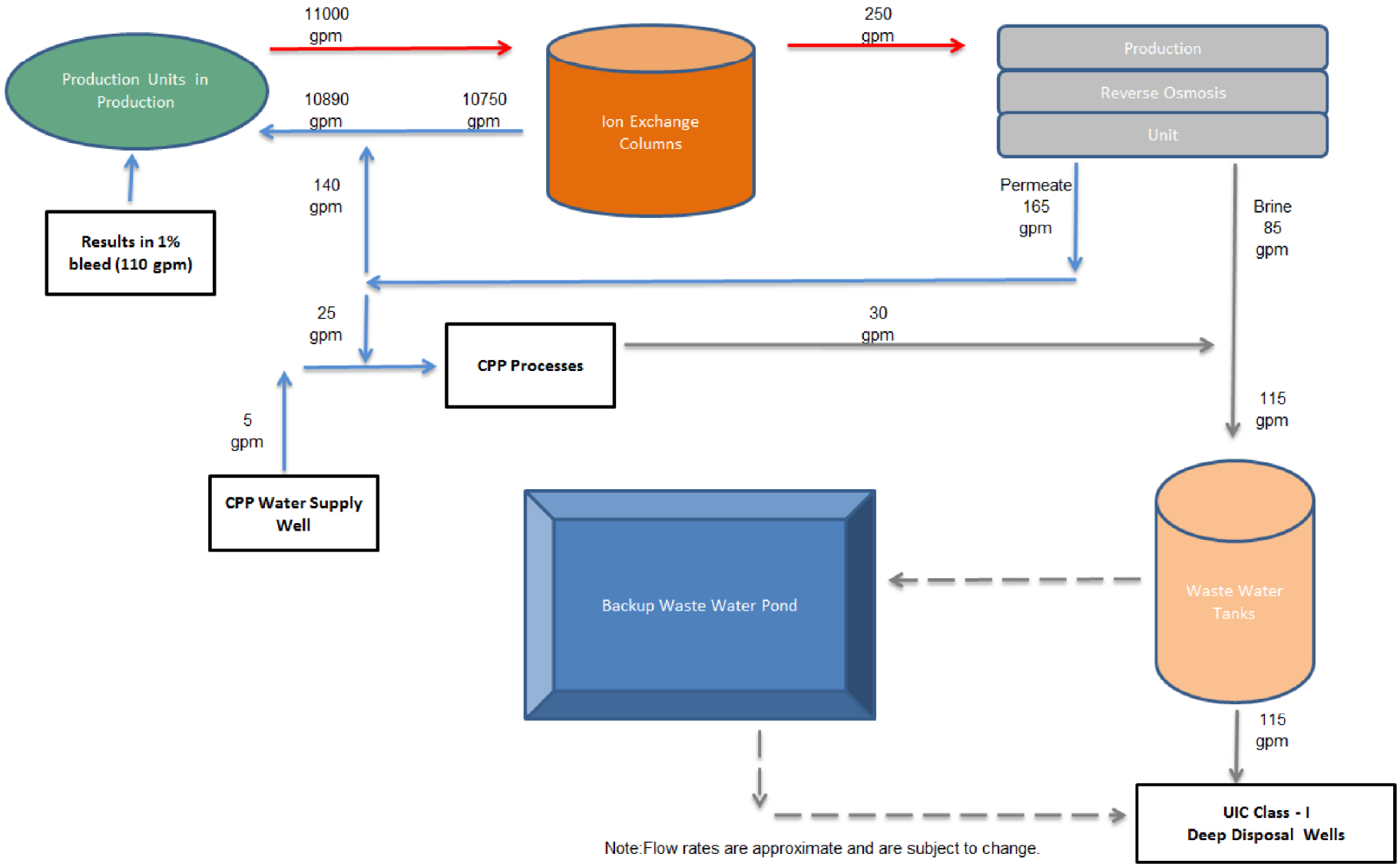

Path: O:\WY_Projects\2010-100_AUC_Reno_Creek\Project_MXD\Submittal\Water Balance Production Phase Only.mxd

TREC, Inc.
Engineering & Environmental Management
900 Werner Court
Suite 150
Casper, WY 82601
Phone (307) 265-0696
Fax (307) 265-2498
www.treccorp.com

PROPOSED RENO CREEK PROJECT
CAMPBELL COUNTY, WY

PREPARED FOR: AUC LLC
LAKEWOOD, CO

Water Balance
Production Phase Only

Drawn: RHK
Checked: RMD
Approved: JEY

Figure 3-5

Rev. #	Description	Date
0	Draft	09/08/2011
1	Final	11/12/2011
2	Revisions made per Client Request	02/21/2012

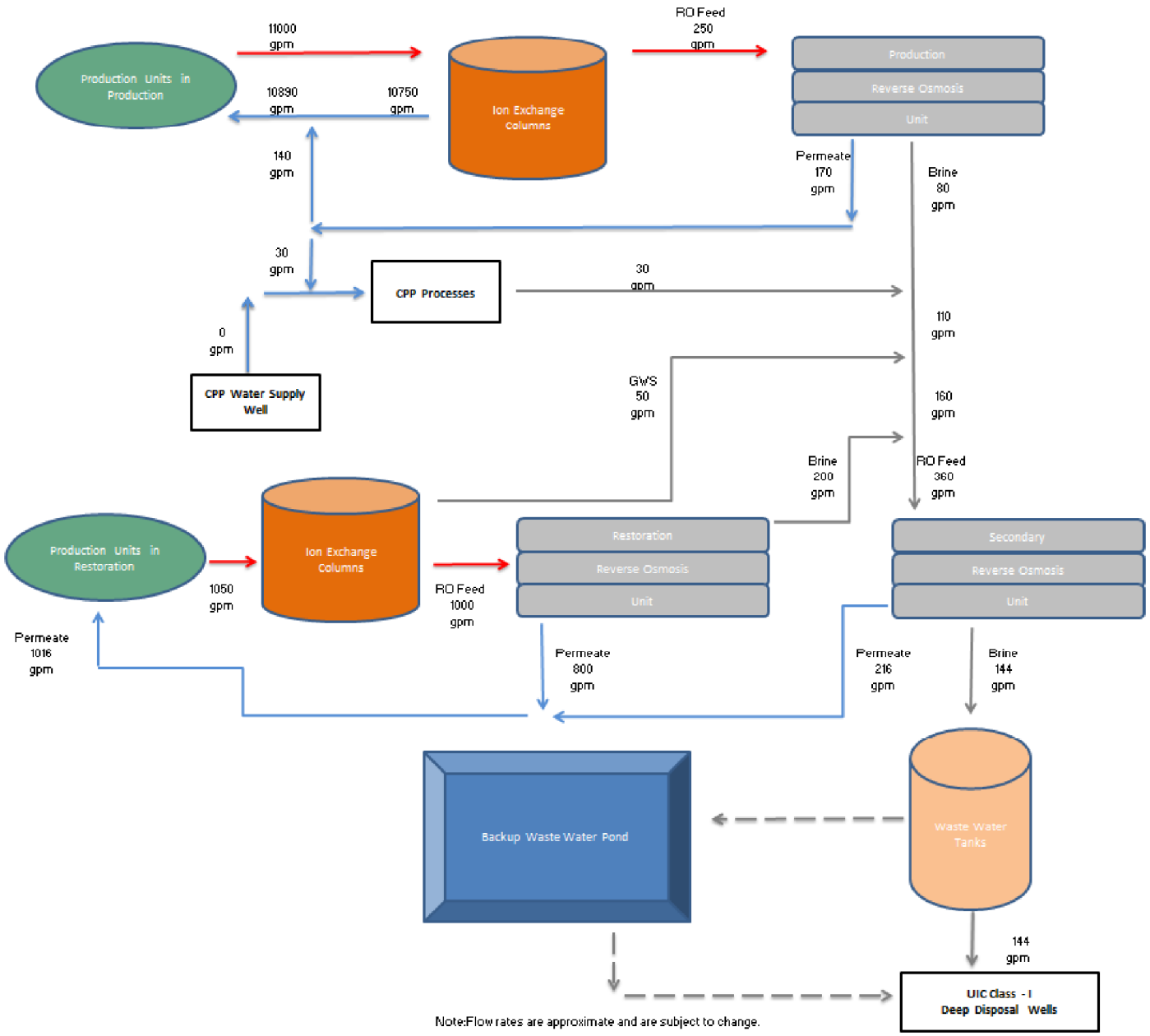

Path: O:\WY_Projects\2010-100_AUC_Reno_Creek\Project_MXD\Submittal\Water Balance Production and Restoration Phases.mxd

TREC, Inc.
Engineering & Environmental Management
900 Werner Court
Suite 150
Casper, WY 82601
Phone (307) 265-0696
Fax (307) 265-2498
www.trecorp.com

PROPOSED RENO CREEK PROJECT
CAMPBELL COUNTY, WY

PREPARED FOR: AUC LLC
LAKEWOOD, CO

Water Balance
Production and Groundwater Restoration Phases

Drawn: RHK
Checked: RMD
Approved: JEY

Figure 3-6

Rev. #	Description	Date
0	Draft	09/08/2011
1	Final	11/12/2011
2	Revisions made per Client Request	02/21/2012

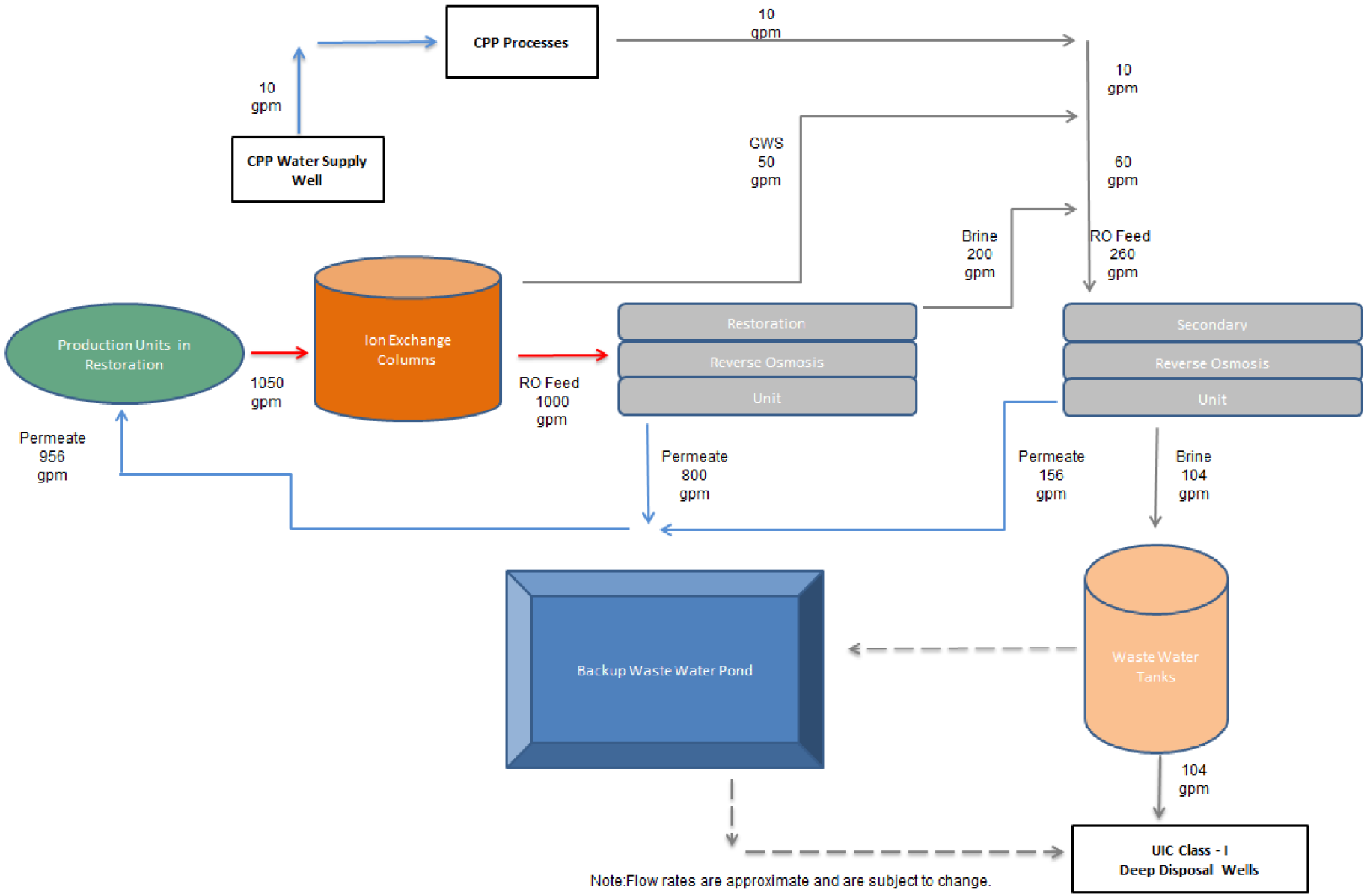

Path: O:\WY_Projects\2010-100_AUC_Reno_Creek\Project_MXD\Submittal\Water Balance Restoration Phase Only.mxd

TREC, Inc.
Engineering & Environmental Management
900 Werner Court
Suite 150
Casper, WY 82601
Phone (307) 265-0696
Fax (307) 265-2498
www.treccorp.com

PROPOSED RENO CREEK PROJECT
CAMPBELL COUNTY, WY

PREPARED FOR: AUC LLC
LAKEWOOD, CO

Water Balance
Groundwater Restoration Phase Only

Drawn: RHK
Checked: RMD
Approved: JEY

Figure 3-7

Rev. #	Description	Date
0	Draft	09/08/2011
1	Final	11/12/2011
2	Revisions made per Client Request	02/21/2012

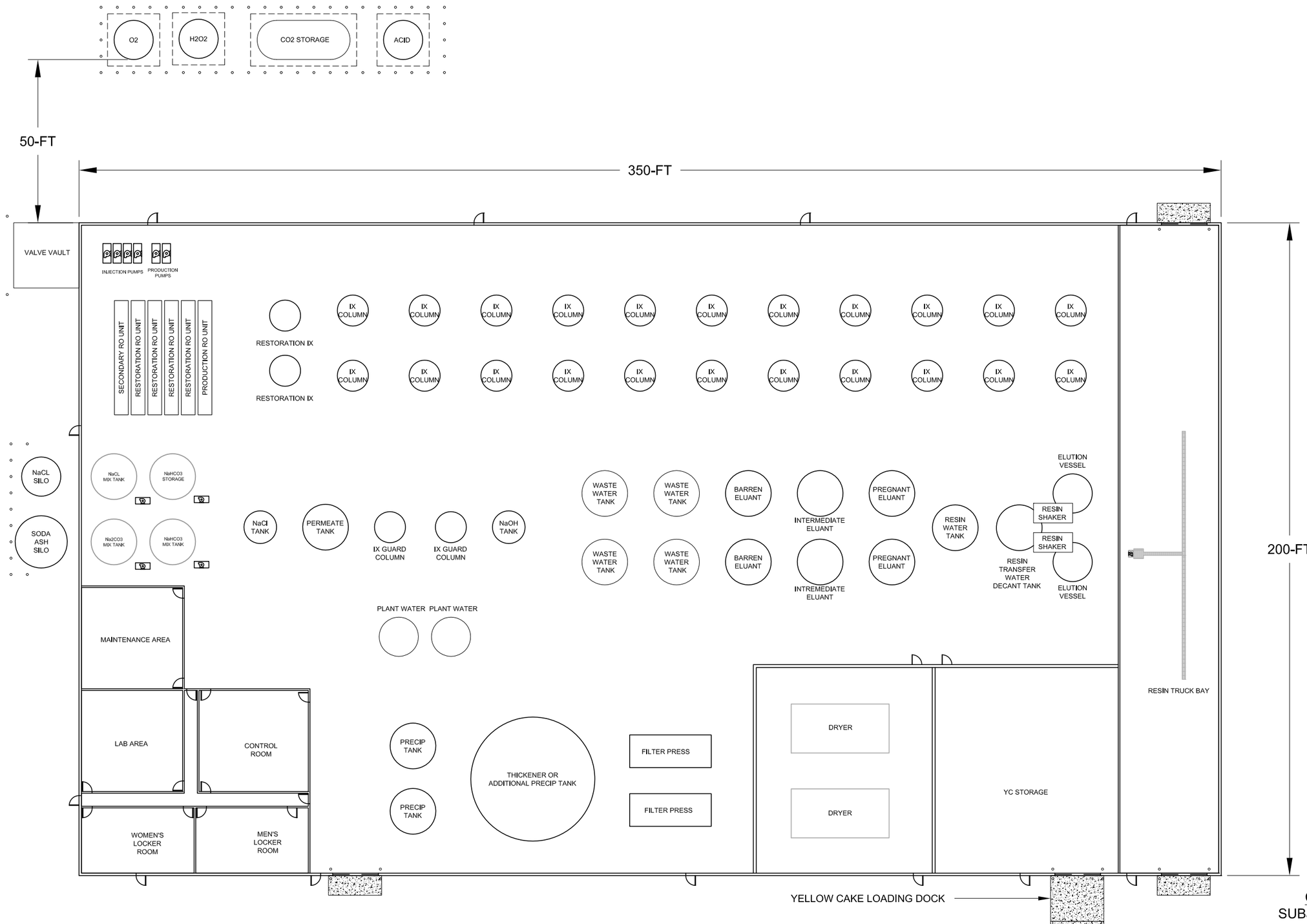

TREC, Inc.
Engineering & Environmental Management
www.treccorp.com

Conceptual CPP Building Layout
Reno Creek Permit Application
AUC, LLC
Campbell County, Wyoming

FIGURE 3-8

Drawn: TBK	Checked: RL	Approved: DHG
Rev. #	Description	Date
-	-	-
-	-	-
-	-	-

DRAWING: z:\current_projects\2010-100 auc reno creek permit app\cad\figures\2010-107_f002_building_layout.dwg

Print Date: 9/6/2012 3:31 PM

COPYRIGHT 2012, TREC

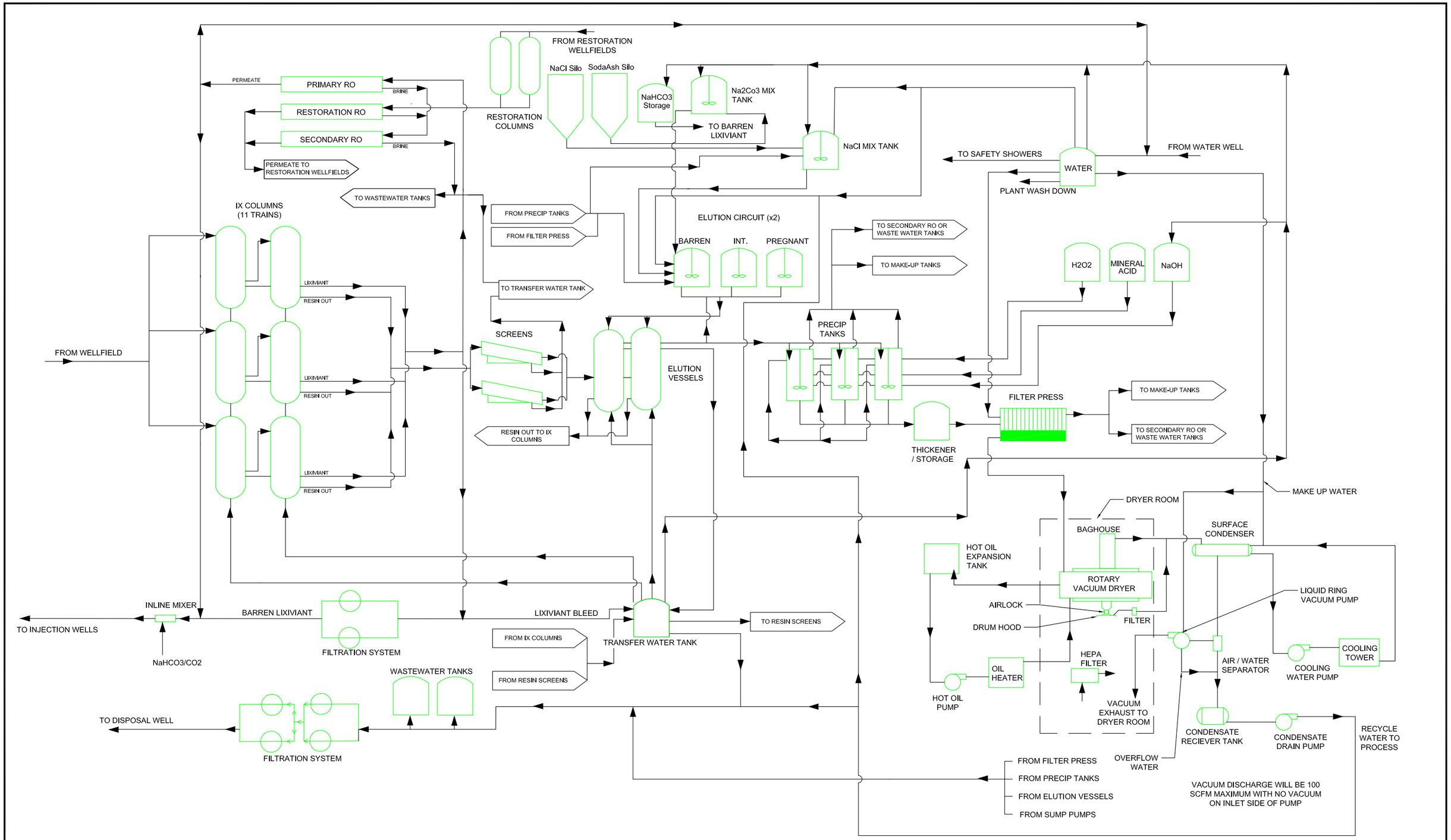

TREC, Inc.
Engineering & Environmental Management

PROCESS FLOW DIAGRAM
PROPOSED RENO CREEK PROJECT
AUC LLC
Lakewood, CO

Drawn: WB
Checked: BP
Approved: JY

Figure 3-9

Rev. #	Description	Date
1	Client Revisions	11/07/11
2	BP Revisions	12/28/11
3	Final	09/17/12

DRAWING: 2010-100_FIGURE3-9 CPP_FLOWDIAGRAM.DWG

Print Date: 9/17/2012 2:44 PM

COPYRIGHT 2011, TREC

3.5 References

Center for Nuclear Waste Regulatory Analyses, NUREG/CR–6733, *A Baseline Risk-Informed, Performance-Based Approach for In Situ Leach Uranium Extraction Licenses*, 2001.

Geraghty and Miller, Inc. Mechanical Integrity Testing of Injection Wells. 1980. Final report prepared and submitted to the Environmental Protection Agency. Contract #68-01-5971.

Mackin, P.C., D. Daruwalla, J. Winterle, M. Smith, and D.A. Pickett. NUREG/CR–6733, "A Baseline Risk-Informed Performance-Based Approach for *In-Situ* Leach Uranium Extraction Licensees." Washington, DC: NRC. September 2001.

TABLE OF CONTENTS

4 EFFLUENT CONTROL SYSTEMS 4-1
4.1 Gaseous Emissions and Airborne Particulates 4-1
4.2 Gaseous Effluents 4-2
4.2.1 Air Particulate Effluents 4-3
4.2.2 Reporting Effluent Releases 4-5
4.3 Byproduct Material Management 4-7
4.3.1 Liquid 11e.(2) Byproduct Material 4-7
4.3.1.1 Brine 4-7
4.3.1.2 Permeate 4-7
4.3.1.3 Other Liquid 11e.(2) Byproduct Material 4-7
4.3.2 Liquid Non-11e.(2) Byproducts 4-8
4.3.2.1 TENORM 4-8
4.3.2.2 Storm Water Runoff 4-8
4.3.2.3 Domestic Liquid Waste 4-9
4.3.2.4 Used Petroleum Products and Chemicals 4-9
4.3.3 Solid 11e.(2) Byproduct Materials 4-9
4.3.4 Solid Non-11e.(2) Byproduct Materials 4-10
4.3.4.1 Solid Waste 4-10
4.3.4.2 Septic System Solid Waste 4-11
4.3.4.3 Hazardous Waste 4-11
4.3.5 Lined Backup Storage Pond Design 4-11
4.3.6 Liquid 11e.(2) Byproduct Material Disposal 4-16
4.3.6.1 Brine Disposal 4-16
4.3.6.2 Class I Deep Disposal Wells 4-16
4.3.6.2.1 Deep Disposal Well Capacity 4-17
4.3.6.2.2 Deep Disposal Well Location Change 4-18
4.4 References 4-23

List of Tables

Table 4-1: Operational Parameters Used to EstimateSemiannual Radon Emissions 4-19
Table 4-2: Default Based Parameters Used to Estimate Radon Releases 4-20
Table 4-3: Summary of Anticipated Liquid Byproduct Stream Water Quality 4-21
Table 4-4: Injection Rates and Pressures for Smith Ranch-Highland Uranium Project Deep Disposal Wells 4-22

List of Addenda

Addendum 4-A: Subsurface Exploration and Geotechnical Engineering Report
Addendum 4-B: UIC Class I Deep Disposal Well Permit Application

4 EFFLUENT CONTROL SYSTEMS

This section describes the effluent control systems that will be used at the proposed Reno Creek Project (Proposed Project). Effluents of concern at ISR operations include the potential release of radon gas, radionuclides in liquid streams, and particulates associated with dried yellowcake. Related discussions and/or detailed information can be found in:

- Addendum 4-B (Deep Disposal Well Permit Application);
- Sections 3.1, 3.2 and 3.4 of this TR (Description of Proposed Facility);
- Sections 5.7.1 and 5.7.7 of this TR (Effluent Control Techniques/Monitoring);
- Section 7.5 and 7.5.3 of this TR (Accidents and Transportation);
- Section 1.4.9 of the ER (Introduction of the ER);
- Section 3.12 of the ER (Waste Management);
- Section 4.13 of the ER (Potential Byproduct Management Impacts);
- Section 5.14 of the ER (Byproduct Management);
- Section 6.11 of the ER (Mitigation); and
- Section 7.1 of the ER (Radiological Monitoring).

The effluent control systems at the Proposed Project include existing technologies that have demonstrated success at controlling effluents using specific procedures, training, and engineering controls to reduce effluent production and minimize the potential for accidental releases. The proposed monitoring and control systems have been located to optimize their intended function and are appropriate for the types of effluents generated during ISR construction, operation, groundwater restoration and decommissioning.

These procedures include recycling/reusing materials through use of engineering controls, segregation of byproduct material, careful control of all materials delivered to or transported from the Proposed Project area in accordance with US DOT requirements, extensive employee training in hazard recognition and prevention of accidental releases, use of signage, and detailed Standard Operating Procedures (SOPs) and Spill Prevention/Response Plans, and for all types of effluent. The SOPs will be prepared following the issuance of the license and be available to NRC for inspection.

4.1 Gaseous Emissions and Airborne Particulates

The primary radioactive airborne effluent at the Proposed Project facilities will be radon. Radon can be found in the pregnant lixiviant coming from the wellfields into the CPP, where processing of uranium takes place. Radon occurs naturally in the groundwater in the ore body and is brought to the CPP by pumping pregnant lixiviant out of the Production Zone aquifer to the CPP. Uranium will be recovered from the groundwater by

passing the pregnant lixiviant through pressurized, down-flow IX columns and subsequent elution, precipitation, drying and packaging.

NUREG-1910 (GEIS Section 2.7.1) notes that pressurized down-flow IX systems can contain most of the ^{222}Rn present in the lixiviant. Thus, the use of this type of IX system allows for more effective engineering control of ^{222}Rn. Use of a pressurized, down-flow IX system enables AUC to control ^{222}Rn releases during maintenance and resin transfer, allowing for a reduction in ^{222}Rn emissions relative to other available IX technologies. The use of this system also represents a specific emission control method which reduces emissions to levels that are as low as reasonably achievable (ALARA) and complies with the requirements of 10 CFR Part 40, Appendix A, Criterion 8. The use of engineering controls, such as pressurized, down-flow IX columns, along with independent tank and area ventilation systems, frequent monitoring and other mitigation measures as described in Section 6 of the ER will ensure that exposures to CPP personnel to ^{222}Rn and its progeny are maintained ALARA.

Venting of pressurized down-flow IX columns only occurs when the columns are being dewatered, when they are re-filled to be returned to a pressurized operating condition removing any trapped air, or during occasional upset conditions. Vents from the individual pressurized down-flow IX columns will be directed to a manifold system which will be exhausted to the atmosphere outside and well above the CPP. An induced draft fan will be placed into this manifold system to force the exhausted air to the outside atmosphere. When it is necessary to vent a pressurized down-flow IX column, venting any ^{222}Rn that may have been released from the lixiviant to the atmosphere outside the plant will minimize employee exposure. The pressurized, down-flow IX vessel vent outlet will be placed to minimize collection of ^{222}Rn by plant air intake vents.

Small amounts of ^{222}Rn may be released via solution spills, filter changes, IX resin transfer, reverse osmosis (RO) system operation during groundwater restoration, and routine maintenance activities. The CPP ventilation system will minimize employee exposure to ^{222}Rn. Air in the plant will be sampled for ^{222}Rn progeny, as described in Section 5, to assure that levels of ^{222}Rn and its progeny are maintained ALARA.

4.2 Gaseous Effluents

This section describes the gaseous effluent control systems which will be installed in the Proposed Project CPP for processes other than IX, where ^{222}Rn or radioactive air particulates could potentially be released.

Separate, independent ventilation systems consisting of ducting and/or piping attached to the expected points of release will be installed for all indoor, atmospheric, process tanks and vessels where ^{222}Rn could be expected. These systems will utilize redundant exhaust

fans to collect and exhaust gases to the outside atmosphere, controlling employee exposure if one of the fans is not operating properly. Ventilation exhaust points will be located on the leeward side of the building at an elevation higher than the peak of the building to ensure prevailing winds will disperse the exhaust. Additionally, ventilation intakes will be on the upwind side of the building, to ensure exhausted ^{222}Rn will not be returned to the facility by prevailing winds, as recommended in Regulatory Guide 8.31. Airflow through any openings in the vessels will be from the process area of the CPP, into the vessel and out through the ventilation system, controlling any releases that may occur inside the vessel. To ensure minimization of exposure for all process areas within the CPP, independent, point-source ventilation systems, such as over-the-resin screens, will be used as necessary. Similar independent ventilation systems have been installed at other ISR facilities, and have proved successful in minimizing employee exposure.

Work area ventilation will be maintained utilizing a combination of natural ventilation and a forced-air system that will draw air into the CPP, and exhaust to atmosphere outside the building. During favorable weather conditions, open doorways and convection vents in the roof will provide sufficient work area ventilation. The forced air system will supplement this condition as required during the heating season. The forced air ventilation system will be designed for a maximum of six air changes per hour. However the system may be operated at lower rates as conditions warrant but will still ensure that air concentrations of ^{222}Rn or radioactive air particulates remain much less than 25 percent of their Derived Air Concentrations (DAC), consistent with 10 CFR Part 20 and NRC Regulatory Guide 8.31, Section 3.3. The CPP will have full time alpha radiation level monitoring to alert operators of increasing ^{222}Rn levels. As noted in Regulatory Guide 8.37 (Section C.3.1), effluent monitoring systems should be designed in accordance with ANSI N13.1 (1969), *"Guide to Sampling Airborne Radioactive Materials in Nuclear Facilities"* and ANSI N42.18, *"Specification and Performance of On-site Instrumentation for Continuously Monitoring Radioactive Effluents."* AUC commits to such guidance.

4.2.1 Air Particulate Effluents

Potential radiological air particulate effluents may consist of dried yellowcake from the drying and processing areas of the CPP, and ^{222}Rn progeny. The proposed CPP will use a vacuum dryer system to produce the final yellowcake product. Vacuum drying systems do not release uranium when operating, by design. This system is proven technology, and has been approved for use at multiple sites by NRC (Lost Creek, Moore Ranch, and Nichols Ranch) and is being used successfully at several ISR sites where yellowcake is currently being produced. As noted in NUREG-6733, vacuum dryer technology provides an emission control approach to ALARA at the source, exceeding the 95 to 99 percent efficiency of multi-hearth dryers, and “is designed to capture virtually all escaping particles." NUREG-1508 (HRI’s FEIS for Crownpoint) also notes that this technology

will result in zero emissions, and require no ventilation from the drying chamber to the atmosphere. Therefore, the use of a vacuum dryer is an emission control method that reduces emissions to levels that are ALARA, and complies with the requirements of 10 CFR Part 40, Appendix A, Criterion 8. Because the NRC recognizes the efficiency of vacuum dryer systems, additional sampling of the effluent from the vacuum dryer is considered unnecessary. The vacuum drying system will include particulate controls potentially including high-efficiency filters on the vacuum line directly on the dryer, surface condensers, condensate tanks, vacuum pumps and packaging hoods with filtration systems.

The filter housing will be an air and vapor filtration unit, mounted directly onto the drying chamber. This will allow any dry solids that may be collected on the filter surfaces to be discharged back to the drying chamber, while the dryer remains under vacuum to maintain negative pressure in the drying chamber. The filter housing can be heated to control condensation of water vapor during the drying cycle if necessary. The filter housing will be kept under negative pressure by the vacuum system and the differential pressure across the filters being monitored to ensure adequate vapor recovery from the drying chamber.

The condenser unit will be located downstream of the filter housing, and will be water cooled. This reduces the water vapor to a liquid, and separates it from the non-condensable gases coming from the drying chamber. Gases will be moved through the condenser by the vacuum system. Any particulates passing through the filter housing will be wetted and entrained in the condensed moisture within this unit then deposited in the condensate tank, where it will be recycled to the process.

The vacuum pump(s) will be a rotary, water sealed unit (liquid ring) that will provide a negative pressure on the entire system during the drying cycle. These pumps will also be used to provide ventilation during transfer of the dry product from the drying chamber to 55-gallon drums. The water seal of the rotary vacuum pump will capture any solids that may have passed the condenser allowing them to be recycled back into the process.

Once sufficiently dried, yellowcake will be discharged from the drying chamber through a bottom port into drums. A level gauge, weigh scale, or other suitable device will be used to determine when a drum is full. Particulate capture will be provided by a sealed hood between the drying chamber and the top of the drum. The vacuum will draw particles into a high efficiency filter, and draw the remaining gasses to the vacuum system. To accomplish this, the packaging hood will be connected to the vacuum system before the condenser, to ensure entrainment of any particles which may pass the filter when the yellowcake is being transferred to drums.

The drying system will have sufficient instrumentation to operate automatically and will be designed to shut down automatically if operating parameters including temperature or

vacuum levels fall outside of limits. Automatic alarms will occur in the event the emission control system is not performing within operational limits. If the system is alarmed due to the emission control system, the operator will follow standard operating procedures to recover from the alarm condition. In the event the emissions control system is not operating within normal parameters, and the dryer is full of product, the dryer will not be unloaded until the emission control system is returned to service within specified operational conditions. Additionally, the emissions control system will be operated to ensure it is functioning properly before an empty dryer is loaded with product.

In order to ensure that the emission control system is performing within specified operating conditions, instrumentation will be installed to utilize an audible and/or visual alarm if the vacuum level is outside operating specifications. The emission control system will be monitored continuously through the control system and automatically documented during drying operations. The control system will immediately initiate alarming to alert operators if operating parameters are approaching or past set limits. In the event the automatic control system is not functioning, but the operation of the system can be confirmed through manual or visual measurements, the operator will perform and document checks of the differential pressure, or vacuum, every hour in accordance with 10 CFR Part 40, Appendix A, Criterion 8 during dryer operations. These checks will be performed and documented by the control system during normal operations. Additional details about dryer operations are included in TR Section 3.2.1.4.

Air sampling will be routinely performed in the area to assess the concentration of ^{222}Rn progeny using the modified Kusnetz method. Measurements will be made throughout the plant on a monthly basis, and if concentrations exceed 25 percent of the DAC in 10 CFR 20 Appendix B (>0.08 Working Levels), sampling will be increased to weekly and working level hours of exposure would be calculated and assigned to worker exposure records. If the concentrations reach greater than 25 percent of the DAC, the Radiation Safety Officer (RSO) will investigate potential causes and execute corrective actions. In addition, a particulate air sampler will be operated continuously in the packaging area, with filters pulled and read immediately for gross alpha, then laboratory analyzed for uranium, during packaging operations.

For more information on potential air emissions and air sampling refer to Section 5 of this TR. Impacts from potential emissions are described in TR Section 7, and air quality mitigation measures in Section 6 of the ER.

4.2.2 Reporting Effluent Releases

10 CFR §40.65 requires licensees to submit a semiannual environmental and effluent report to NRC. The report must specify the quantity of each of the principal radionuclides released to unrestricted areas in liquid and in gaseous effluents during the previous six

months of operation.

The predominant radionuclide released to unrestricted areas from the Proposed Project will most likely be airborne releases of ^{222}Rn from non-point sources such as Production Units and the CPP. Radon releases in the Production Units could occur from material contained in mud pits during drilling, from sample collection in header houses, and from wellhead venting activities. Radon releases from the CPP building would occur through periodic tank ventilation during venting and backwashing operations, and from the normal building ventilation system, which will exhaust building air at various points in the structure. As such, no discrete monitoring locations would be available to make representative measurements of ^{222}Rn concentration or air flow rates to estimate semiannual airborne emissions of ^{222}Rn.

Because of these factors, the methods used to estimate ^{222}Rn emissions in Section 7.4 of this document will be used to estimate the semiannual ^{222}Rn emissions from the facility as required in 10 CFR §40.65. The parameters from Table 7-8 of the TR, coupled with updated parameters in Table 4-1 below to account for actual operational information, will be used to calculate semiannual ^{222}Rn emissions. These updated parameters will be applied to the equations in Section 7.4 to calculate the semiannual releases as required by 10 CFR §40.65. Landauer RadTrak integrating ^{222}Rn monitors, read quarterly, are already in use at all environmental air particulate monitoring locations, and will be used to verify estimated environmental airborne concentrations of ^{222}Rn during facility operations.

Parameters listed in Table 7-8 of this document, which are not included in Table 4-1, and for which site specific parameters have not been measured, are listed in Table 4-2. In these cases, default or typical parameters as described in Regulatory Guide 3.59 will be used.

The ^{226}Ra concentration in ore assumes ^{226}Ra is in secular equilibrium with the average uranium concentration for the Proposed Project listed in Table 7-8, which is consistent with the assumptions used in Regulatory Guide 3.59.

The ^{222}Rn emanating power for the ore has not been measured. Table 8.1 of "Data Collection Handbook to Support Modeling Impacts of Radioactive Material in Soil" (USDOE, 1993) presents a range of ^{222}Rn emanating power for crushed uranium ore of 0.006 to 0.55 with an arithmetic mean of 0.28. Regulatory Guide 3.59 states to use a ^{222}Rn emanating power of 0.2 when this parameter has not been measured. The use of 0.2 for ^{222}Rn emanating power is consistent with methods described in Regulatory Guide 3.59 and is within the range of typical values for uranium ore.

As concluded in Appendix D of NUREG-1569, particulate releases, which include long-lived radionuclides in the uranium decay series, stemming from the rotary vacuum dryers are not expected under normal operating conditions. No other sources of long-lived

radionuclide releases into the atmosphere from routine site operations have been identified.

4.3 Byproduct Material Management

This section describes the proposed byproduct material management system. Liquid and solid byproducts are divided into two general categories: 11e.(2) byproduct material and non-11e.(2) byproduct material. The proposed byproduct management system is summarized below for each category. Additional details about Byproduct Management are found in Section 4.13 of the ER.

4.3.1 Liquid 11e.(2) Byproduct Material

4.3.1.1 Brine

Brine generated through the use of RO units will be sent to the CPP waste water tanks prior to disposal in the deep disposal wells (DDW). Occasionally RO brine will be temporarily discharged to the lined backup storage pond if DDW capacity is not sufficient due to maintenance or repair of a DDW. In the event it is necessary, AUC will apply for additional DDWs in order to maintain operating capacity.

4.3.1.2 Permeate

A high percentage of permeate generated through the use of RO units will be injected either into the barren lixiviant stream or into the groundwater restoration circuit. Permeate which is not recycled back to operation or restoration activities will be used as plant makeup water. Any discharge of permeate will be under the auspices of a WYPDES discharge permit.

4.3.1.3 Other Liquid 11e.(2) Byproduct Material

Other 11e.(2) liquid byproduct material include spent eluate, resin transfer wash water, plant wash-down water, and fluids generated from production well workovers. Liquid 11e.(2) byproduct material generated in the CPP will be discharged to the wastewater disposal system or to the feed of the secondary RO Unit. Liquid 11e.(2) byproduct material collected from the wellfields will be collected in dedicated portable tanks or tanker trucks and transported to the wastewater disposal system or to the feed of the secondary RO Unit. Any water captured from leaking pipelines or equipment will also be

transported to the wastewater disposal system in dedicated portable tanks or tanker trucks.

Prior to the start of operating the secondary RO unit, these liquid byproduct materials will be disposed of through the DDWs. Following the start of the operation of the secondary RO unit, liquid byproduct materials generated by the CPP and wellfield processes will be included into the feed stream to the secondary RO unit to increase available permeate and to decrease the amount of liquid 11e.(2) byproduct material to be disposed. Brine from the secondary RO unit will be disposed of in the DDWs. The anticipated water chemistry of the waste stream that will be disposed of in the DDWs is presented in Table 4-3.

In the event a DDW is under repair or undergoing periodic testing, liquid 11e.(2) byproduct will temporarily be diverted to and stored in the backup storage pond. Upon completion of the repairs or testing of the DDW, the water in the backup storage pond will be directed to the DDWs for permanent disposal.

4.3.2 Liquid Non-11e.(2) Byproducts

4.3.2.1 TENORM

Technologically Enhanced Naturally Occurring Radioactive Material (TENORM) drilling fluids will be stored and disposed of on-site in mud pits, which will be constructed adjacent to the drilling pads. During hydrologic baseline activities, groundwater was discharged during PZA testing at four of the baseline well clusters. These discharges were authorized under temporary WYPDES permits issued by the WDEQ/WQD. In accordance with the permit, the discharge was monitored for flow, pH, ^{226}Ra, uranium, TDS, and TSS and reported to the WDEQ/WQD.

It is anticipated that other TENORM water generated during operations and decommissioning will be disposed of in a similar manner. A more detailed discussion on TENORM management and disposal can be found in ER Section 4.13.

4.3.2.2 Storm Water Runoff

Storm water management is controlled under the Wyoming Pollutant Discharge Elimination System (WYPDES) permits issued by the WDEQ/WQD. As part of the license, a storm water pollution prevention plan (SWPPP) will be prepared describing best management practices (BMPs) used to keep pollutants out of surface waters and storm drains. Facility drainage will be designed to route storm runoff water away from or around the plant, ancillary buildings and parking areas, and chemical storage. The design

and controls of the Proposed Project facility will be implemented such that runoff is not considered to be a potential source of pollution.

4.3.2.3 Domestic Liquid Waste

Domestic waste from the restrooms, locker rooms and lunchrooms will be disposed of in a septic system that meets the requirements of the WDEQ/WQD and will likely include one or more septic tanks for primary treatment. Septic tank effluent will be disposed of in a gravity or pressure-dosed drain field in accordance with a Class V UIC permit. The septic system will be separate from other liquid byproduct lines to prevent discharge of liquid 11e.(2) byproduct material into the septic fluid. These systems have been approved for other ISR facilities in Wyoming, and also are in common use throughout the United States and the potential impact of the system to the environment is known to be minimal.

4.3.2.4 Used Petroleum Products and Chemicals

At the Proposed Project, small quantities of used oil will be generated from equipment and vehicles used on-site. The used petroleum products will be temporarily stored on-site before being transported to a nearby recycling or disposal facility. These used products will not have been affiliated with the processing or generation of 11e.(2) byproduct material and will not be classified as such.

Used petroleum product fluids will be stored in an aboveground storage tank located within the controlled fenced area of the CPP. The storage tank will be cylindrical and constructed of steel with a locking cap and venting system. Secondary containment will be designed to contain 110 percent of the tank volume. Spills of used petroleum will be contained, mitigated, cleaned up, and reported in accordance with WDEQ requirements.

The Proposed Project is anticipated to be classified as a conditionally exempt small quantity generator (CESQG) by WDEQ/SHWD. As such, the project will be required to generate less than 220 pounds (100 kg) of hazardous waste in any calendar month, generate less than 2.2 pounds (1.0 kg) of acutely hazardous waste in any calendar month, and store less than 2,200 pounds (1,000 kg) of hazardous waste at any one time.

4.3.3 Solid 11e.(2) Byproduct Materials

All contaminated items during operations, ground water restoration and decommissioning that cannot be decontaminated to meet release criteria will be properly packaged, transported, and disposed of off-site at a licensed solid 11e.(2) byproduct material disposal facility. Solid 11e.(2) byproduct materials generated by the Proposed Project that may be contaminated with radioactive isotopes consist of items such as rags, trash,

packing material, worn or replaced parts from equipment, piping, filters, protective clothing, solids removed from process pumps and vessels, and spent resin. Solid 11e.(2) byproduct material which has a contamination level precluding decontamination will be isolated in drums or equivalent DOT approved containers. AUC estimates that the Proposed Project will produce approximately 100 yd^3 of solid 11e.(2) byproduct material per year during operation

Solid 11e.(2) byproduct material will be collected and stored within a designated restricted area of the proposed CPP in appropriate containers (e.g., 55 gallon drums with drum liners) approved by DOT, and will be appropriately labeled and placarded for the class of material being shipped. When these containers are full, they will be closed, sealed and stored within the byproduct storage area and stored in a strong, tight container as defined by DOT regulations. The strong, tight containers will be capable of preventing the spread of contamination and contact with precipitation. The Proposed Project plans to use covered roll-off containers with an approximate capacity of 20 cubic yards. Once full, these containers will be shipped for disposal to a 11e.(2) licensed byproduct disposal facility. Prior to beginning operations, AUC will have in place a signed contract for solid 11e.(2) byproduct disposal at such a facility. During storage, the containers will be located within a restricted area. Access to the byproduct storage facility will be controlled through the use of security fencing, locked gates, and proper posting as a restricted area. Larger items such as contaminated equipment that cannot be stored in a roll-off container will be stored in the designated solid 11e.(2) byproduct material storage area and will be covered/sealed in a manner that will prevent the spread of contamination.

AUC commits to acquiring a solid 11e.(2) byproduct material disposal agreement prior to commencement of licensed operations. AUC understands that obtaining a solid 11e.(2) byproduct material disposal agreement prior to any construction will be included as a license condition if such a byproduct material disposal agreement is not procured prior to the completion of NRC staff's issuance of a license. Transportation of all licensed material will be in accordance with all requirements listed in 10 CFR 71.5 which references specific U.S. DOT regulations. Potential locations and routes for such disposal are described in detail in ER Section 4.13.1.1.2 and ER Section 3.2.

4.3.4 Solid Non-11e.(2) Byproduct Materials

4.3.4.1 Solid Waste

AUC estimates that the Proposed Project will produce approximately 1,500 yd^3 of uncontaminated solid waste material per year. Uncontaminated solid waste will be collected on the site on a regular basis and disposed of in the nearest approved sanitary landfill, compliant with the rules and regulations of WDEQ/SHWD.

4.3.4.2 Septic System Solid Waste

Domestic liquid waste from the restrooms, locker rooms and lunchrooms will be disposed of in an approved septic system that meets the requirements of the WDEQ for Class V UIC wells. Occasionally, it will be necessary to dispose of sludge material collected in septic systems holding tanks. The disposal of these sludge materials will be performed in accordance with WDEQ/SHWD rules and regulations.

4.3.4.3 Hazardous Waste

Hazardous waste materials are defined by WDEQ/SHWD's Hazardous Waste Management Chapter 2 or by USEPA in 40 CFR Part 261. Generated materials defined by these regulations as hazardous waste will be consolidated in appropriate containers upon generation and shipped off-site for disposal at a facility licensed for the acceptance of hazardous waste. Waste material that may be generated at the Proposed Project that may be classified as hazardous could include solvent rags, expired laboratory reagents, solvents, cleaners, or degreasers. It is also expected that the Proposed Project facility will generate Universal Wastes such as batteries, fluorescent light bulbs and used oil.

It is anticipated that the Proposed Project will be classified by WDEQ/SHWD as a Conditionally Exempt Small Quantity Generator (CESQG). As such, the project will be required to generate less than 220 pounds (100 kg) of hazardous waste in any calendar month, generate less than 2.2 pounds (1.0 kg) of acutely hazardous waste, and store less than 2,200 pounds (1,000 kg) of hazardous waste at any one time. This classification as a CESQG does not relieve AUC from complying with CESQG regulations and those requirements to dispose of classified hazardous waste at a properly licensed hazardous waste facility. AUC will comply with the EPA and WDEQ/SHWD CESQG requirements and monitor the generation of hazardous waste to ensure compliance with the weight generation rules of those regulations.

4.3.5 Lined Backup Storage Pond Design

As described in TR Section 3.1.8 AUC will construct a single lined backup liquid 11e.(2) byproduct storage pond as part of the liquid 11e.(2) byproduct management infrastructure for the proposed CPP. AUC has set aside an area to install an additional backup storage pond if warranted. The primary purpose of the backup storage pond is to provide for liquid 11e.(2) byproduct storage in the event of upset conditions, such as a single deep disposal well being down for maintenance or repairs. AUC will design the pond to contain approximately 525,000 gallons, which AUC has calculated will provide 14 days of backup storage capacity at maximum production and restoration rates. A small amount of fresh water will be maintained in the bottom of the backup storage pond to maintain

weight on the pond liner during times when the pond is not being used to temporarily store liquid 11e.(2) byproduct. Otherwise, the backup storage pond will not be used during normal operations.

The design of the backup pond will be based on NRC Regulatory Guide 3.11, "Design, Construction, and Inspection of Embankment Retention Systems at Uranium Recovery Facilities", 10 CFR Part 40, Appendix A, Criterion 5(A), and the pertinent laws and regulations indicated therein. It should be noted that these regulations apply to 11e.(2) impoundments. The backup storage pond is designed specifically as a redundancy system to the DDWs, which are the primary liquid 11e.(2) byproduct disposal option. Therefore, some of the requirements for tailings impoundments do not apply to the design of the backup storage pond. The primary difference is the limited use of the backup pond during the life of the facility. Control of potential windblown particulate releases from the dried fringe areas of the pond that has been temporarily in use will be managed via clean water wash down to remove residues, temporary application of commercially available dust suppression/stabilization sprays, or other means**.**

At the time of this application, a detailed backup storage pond design has not been completed, however geotechnical test borings have been completed and design work will be completed as the licensing process progresses. The pond and potential additional pond locations and estimated dimensions have been chosen as indicated on Figure 3-1 of this TR. The logs from the geotechnical test borings from the proposed pond locations (borings B9 through B12) are included in Addendum 4-A. The complete geotechnical test borings report will be included with the backup storage pond design plan.

Prior to commencement of pond construction, AUC will submit to NRC a backup storage pond design plan based on the site specific geotechnical investigation. The backup pond design plan will be provided to the NRC staff with the following information:

- Site and material characterization;
- Configuration and location;
- Slope stability analysis;
- Settlement;
- Liquefaction potential analysis;
- Pond storage/freeboard analysis;
- Surface water diversion design;
- Erosion protection design (embankment slopes and diversion ditches);
- Liner design;
- Leak detection system design;
- Hydrostatic uplift analysis;
- Construction specifications;

- Quality control testing program (methods and frequencies);
- Operational inspection plans; and
  Closure plans.

4.3.5.1 Pond Liner and Leak Detection Systems

The storage pond design will utilize a double liner system with an intervening leak detection system. Backup pond liners and the leak detection system will meet the requirements of NRC Regulatory Guide 3.11. The backup pond primary liner will likely be a high density polyethylene (HDPE) or a polypropylene (PP) liner with a minimum thickness of 36 mils (0.036 inch). HDPE and PP liners are generally very resistant to chemicals and alkaline and acid agents, with the exception of oxidizing acids, and salt solutions (Renken et al 2005). Site preparation and liner installation will be in accordance with manufacturer's specifications.

The leak detection system will consist of a permeable drainage layer and a collection piping system, sandwiched between the upper and lower layers. The permeable drainage layer will be located directly under the primary liner. This layer will provide support for the overlying liner, and will also transmit any leakage to collection pipes. The drainage layer will be constructed of suitable, non-reactive transport media (e.g. washed silica sand). Beneath the backup pond leak detection system will be a secondary geosynthetic liner, with a minimum thickness of 36 mils (0.036 inch). The secondary liner will function to contain potential leaks in the primary liner, and will be installed on top of the underlying foundation material. Standpipes will be installed to allow water level measurements to be taken of the permeable leak detection drainage layer. A detailed description of the leak detection system design will be included in the backup storage pond design plan which AUC will provide to NRC.

4.3.5.2 Pond Leak Detection Well Plan

During the site specific geotechnical evaluation for the backup storage pond, AUC determined that a shallow perched water table is not currently present beneath the proposed pond location. Fifteen geotechnical borings were drilled to a depth of approximately twenty (20) feet, with four borings drilled within the proposed pond locations. Groundwater was not observed in any of the test borings during drilling operations. As part of the pond leak detection system AUC will install shallow leak detection wells to provide for redundant detection of potential leaks. AThe depth to the surficial groundwater bearing unit within the Proposed Project boundary is greater than 20 feet. A detailed discussion of this surficial groundwater unit is included in Sections 2.6 and 2.7 of this TR.

AUC plans on installing four piezometer/leak detection wells. The completion intervals of the wells will be based on the results of the soil sampling conducted during the geotechnical evaluation. AUC will target the most permeable sediment layers that will provide a conduit of potentially leaked pond byproduct water. AUC will propose the location of the leak detection wells in the backup storage pond design plan.

As discussed in TR Section 2.7, the Overlying Aquifer is considered the uppermost aquifer within the Proposed Project boundary. Based on the depth to the top of the overlying aquifer, which ranges between approximately 70 and 155 ft below ground surface, and the observed sequence of finer grained silt and shale that overlies this aquifer, the overlying aquifer is considered to be isolated from the surface water drainages present in the Proposed Project area, which would prevent the infiltration of fluids should a leak develop in the storage pond liner system. Therefore, AUC will not install leak detection wells in the Overlying Aquifer as part of the storage pond leak detection well network.

Since the leak detection well network will serve as a redundant backup to the storage pond leak detection system, AUC will measure the water levels in the storage pond leak detection wells quarterly.

If there is a water level increase in a pond leak detection well or water is present in a previously dry well, which suggests that a leak might have occurred, AUC will attempt to collect a water sample from the affected leak detection well. AUC will determine through statistical analysis of the water quality whether the groundwater collected from the leak detection well is from a leak from the storage pond or from surface waters.

4.3.5.3 Operational Inspection Plans

AUC will conduct routine pond inspections. Inspection sheets and leak detection well monitoring results will be maintained on-site and submitted in annual reports to NRC and WDEQ/LQD. In the event of a confirmed loss of liner integrity, a phone or email notification to NRC will occur within 48 hours to be followed by a written report to the NRC within 30 days. This report will detail the suspected cause of the leak, estimated amount of leaked liquid, the chemical nature of the liquid, and mitigation efforts undertaken to recover any suspected byproduct water leaked. In addition, the report will provide methods to prevent a similar event in the future. The following four sections outline the routine pond inspection.

4.3.5.3.1 Daily Inspections

The inspections will include visual inspections of the piping, berms, diversion ditches, freeboard, and leak detection systems. The minimum freeboard will be determined during pond design. Following construction of the backup pond, AUC will determine the baseline water quality in the standpipes connected to the leak detection system and also the height of fluid within the pipes. If during the daily inspections a fluid height in any of the standpipes for the pond leak detection system is found to be in excess of six vertical inches greater than the baseline level, then AUC will collect a sample of the fluid for analysis of specific conductance. If the specific conductance of the fluid in the leak detection system exceeds the baseline standpipe water quality by greater than 50 percent, then AUC will conclude that a leak has occurred in the pond's primary liner and AUC will perform mitigative and corrective actions.

4.3.5.3.2 Weekly Inspections

Weekly inspections will include visual inspection of the entire area, including perimeter fencing. The Manager of EHS and Regulatory Affairs, and the Operations Manager, will review the inspection report. Routine weekly inspections reports will be maintained on-site by the RSO for NRC staff to review during routine site inspections.

4.3.5.3.3 Quarterly Inspections

Quarterly inspections will include sampling of the designated groundwater leak detection wells. Results of the quarterly inspections will be included in the quarterly report submitted to the NRC. Water levels at the wells in the leak detection network will be monitored quarterly. Should water levels rise in the wells or water appears in a previously dry well, AUC will begin an investigation. The investigation will evaluate whether or not the increased water levels are attributed to natural infiltration of surface water or infiltration of fluids from the pond. If the source of the water is attributed to pond leakage, then AUC will perform immediate corrective action to eliminate the leak and any appropriate remedial actions including characterization of impacts to shallow soils.

4.3.5.3.4 Annual Technical Inspection

Annual inspections will include a review of the previous year's daily, weekly, and quarterly inspections, assessment of the hydraulic and hydrologic capacities, and a survey of the embankment by qualified personnel. AUC will submit a copy of the report to the NRC for review.

4.3.5.4 Corrective Action Procedures

The corrective actions include notifying the NRC Project Manager by telephone or email within 48 hours and lowering the water level in the storage pond sufficiently to eliminate the leak. AUC commits to completing corrective actions within 60 days, during which time AUC will not use the pond to store byproduct material until qualified personnel inspect the repaired liner. AUC will submit a report to the NRC and the WDEQ upon completion of the corrective actions, including documentation of all pond repairs. AUC will maintain routine daily inspections reports on-site for NRC or WDEQ staff to review during routine site inspections.

4.3.6 Liquid 11e.(2) Byproduct Material Disposal

Liquid 11e.(2) byproduct material disposal at the Proposed Project will be accomplished through deep well injection. Deep well injection frequently is utilized by ISR operations as the primary tool for liquid 11e.(2) byproduct material disposal and has been utilized by ISR facilities throughout the PRB. The deep injection well(s) will be permitted in accordance the WDEQ Water Quality Division (WQD) Class I Underground Injection Control (UIC) rules and regulations. A backup storage pond will be designed and constructed for use as an alternate storage option for situations when the deep injection well(s) is temporarily unavailable due to upset, work over, or annual testing.

4.3.6.1 Brine Disposal

Brine generated at the Proposed Project will be disposed in Class I deep disposal wells. The quantity of brine generated during the operation/restoration phase and the restoration only phase of the Proposed Project will be minimized primarily by employing a secondary RO unit. That is, the brine from the production and the groundwater restoration RO units will be further treated through a secondary RO unit. This will reduce the brine quantity by an estimated 40 to 50 percent compared to a single-phase RO system. AUC will further reduce the brine quantity by employing limited groundwater sweep.

4.3.6.2 Class I Deep Disposal Wells

AUC submitted a Class I deep injection well permit (UIC 09-621) application during the fourth quarter of 2009 for four deep disposal wells. The target zones will be the Cretaceous Teapot Formation and Parkman Formation. The Class I UIC permit (09-621) application is included as Addendum 4-B. The WDEQ has reviewed the permit application and a draft permit is expected to be issued in the fourth quarter of 2012. Also,

based on the WDEQ review, the four deep disposal wells will be permitted to accept 70 gpm per well.

The receiver interval consists of the Cretaceous Teapot and Parkman sandstones at depths of approximately 7,450 to 8,390 feet bgs. The more permeable sandstones occur within thick intervals of shale, and the Teapot sandstone is overlain by the Lewis shale. Water samples from nearby producing oil wells completed within the Parkman have a total dissolved solids (TDS) concentration of greater than 10,000 mg/l. The producing oil wells are within two miles of the central mineral resource recovery area and the available information indicates that water within the receiver interval will: have a TDS concentration in excess of 10,000 mg/l, have elevated constituent (e.g. chloride and barium) concentrations, and have significant hydrocarbon concentrations that also make the water impracticable to treat for potable use. As indicated in the UIC permit application, included as Addendum 4-B, this leads to the characterization of the water in the receiver zone as a Class VI ground water according to criteria and standards presented in Chapter 8 of the WDEQ/WQD rules and regulations.

AUC has concluded that permanent DDWs are preferable to evaporation in ponds for the following reasons:

1) Liquid byproduct material disposed through deep wells is isolated from human contact eliminating risk to human health; and
2) Large evaporation ponds have the potential for leaks and impacts to the environment and a much larger volume of 11e.(2) byproduct is created through use of evaporation ponds.

All compatible liquid 11e.(2) byproduct material at the proposed CPP will be disposed in the planned deep disposal wells. Further discussion of the liquid 11e.(2) byproduct disposal alternatives considered by AUC is contained in Section 8.1.7 of this TR.

4.3.6.2.1 Deep Disposal Well Capacity

Assessment of estimated injection well capacity for DDWs in the Teckla-Teapot-Parkman completion interval is challenging. Over the years, Class I permit applications submitted for other facilities in Wyoming (ISR and non-ISR) have requested injection rates ranging from 30- to 250-gpm. Review of regional geology and reservoir performance data do not support long-term injection rates at the high end of this range for wells operated consistent with WDEQ and EPA regulations.

Operating ISR facilities in Wyoming include Willow Creek (Uranium One) and Smith Ranch-Highland (SRHUP; Cameco). The Willow Creek disposal wells (completed in the Lance Formation) historically have been operated at long-term rates on the order of 60 to

90 gpm. These rates are consistent with the permeability-thickness of the Lance beneath Willow Creek.

Operational data from SRHUP indicate that:

1) A broad range of rates have been achieved in TTP wells at that facility; and
2) Injection capacity of the newly installed or stimulated wells appears to be largely related to injection pressure. For example, recent quarterly reports (mid-late 2011) on the WDEQ GEMS site indicate that 24-hr/day injection rates for the SRHUP wells are related to injection pressure. Table 4-4 displays this relationship between injection capacity and injection pressure.

One non-ISR TTP Class I well is present in the PRB south of the Proposed Project. This well, the former Cortez Energy/Black Bear Oil Corporation 1-24 Federal well, was completed in the Parkman (Section 24, T36N R72W). The well was permitted in 1995 and the Class I permit expired in 2005. It appears to have been converted to a Class II permit. According to the Class I permit (95-030), the initial permitted rate for this well was 29 gpm. Quarterly operational data are not available from the WDEQ GEMS site.

Injection rates from the four proposed Class I deep disposal wells for the Proposed Project will be based on site-specific conditions encountered and permit limitations imposed by WDEQ. Based on a review of available data, and given that stimulated completion methods will be employed, it is reasonable to predict that sustained rates on the order of 30- to 50-gpm could be attained. Given four operational wells with optimal completions, the total well capacity can be estimated to be in the range of the Proposed Project facility disposal requirements (approximately 120- to 160-gpm). In the event that the capacity of the proposed DDWs is not sufficient to support the Proposed Project, AUC will apply for additional wells as required to maintain operating levels.

4.3.6.2.2 Deep Disposal Well Location Change

It is noted that the location of one of the Class I deep disposal wells included in the Class I application originally submitted by Strathmore (predecessor to AUC) to WDEQ was based on the estimated project boundary at that time (November 2009).

Changes in the Proposed Project boundary since 2009 have resulted in one of the wells (IW-3; Section 34, T43N R73W) being outside the current project boundary. AUC discussed this with WDEQ/WQD staff and WDEQ agreed that an alternate location for this well could be proposed during responses to WDEQ comments on the Class I application. The proposed location for the well is the SE ¼ NE ¼ Section 1, T42N, R 74W. This location will place IW-3 in the same ¼ section as the CPP. The new location for IW-3 is shown on TR Figure 3-1 and ER Figure 1-5.

Table 4-1: Operational Parameters used to Estimate Semiannual Radon Emissions

Parameter	Projected Value	Unit
ISR Area	Determined based on actual area for subjected to ISR for the reporting period	$m^2\ y^{-1}$
Average Lixiviant Flow	Determined based on actual lixiviant flow for the reporting period	$L\ m^{-1}$
Average Restoration Flow	Determined based on actual restoration flow for the reporting period	$L\ m^{-1}$
Operating days per year	Determined based on actual operating days for the reporting period	days
Number of mud pits generated per year	Determined based on actual number of mud pits generated for the reporting period	NA
Storage time in mud pits	Determined based on actual storage time for the reporting period	days
Number of Resin Transfers per day	Determined based on actual number of resin transfers for the reporting period	NA

Table 4-2: Default Based Parameters used to Estimate Radon Releases

Parameter	Value	Unit	Source
Ore Radium Concentration	282	pCi g^{-1}	Reg. Guide 3.59
Radon Emanating Power	0.2	NA	Reg. Guide 3.59

Table 4-3: Summary of Anticipated Liquid Byproduct Stream Water Quality

Chemical Parameter	Estimated Range of the Waste Stream Water Quality	
	Minimum (mg/L)	Maximum (mg/L)
pH (standard units)	6	9
Sodium	150	30,000
Calcium	200	1,000
Potassium	10	1,000
Bicarbonate as HCO_3	1,500	8,000
Carbonate as CO_3	0	500
Sulfate	80	20,000
Chloride	200	35,000
Uranium as U-nat	1	15
Radium (in pCi/L)	300	3,000
Total Dissolved Solids	2,500	50,000

Table 4-4: Injection Rates and Pressures for Smith Ranch-Highland Uranium Project Deep Disposal Wells

Well Name	Average Monthly Injection Rate (gpm)	Average Monthly Injection Pressure (psi)
Smith Ranch 1	40	1,300
Smith Ranch 2	95	1,300
Morton 1-20	23	657
SRHUP No. 6	52	1,120
SRHUP No. 9	30	950
SRHUP No. 10	No data available	No data available

4.4 References

Renken, K., Mchaina, D.M. and Yanful, E.K., 2005. Geosynthetics Research and Applications in the Mining and Mineral Processing Environment. North American Geosynthetics Society (NAGS)-Geosynthetic Institute (GSI) Conference, Las Vegas, Nevada. December 14-16, 2005

USDOE (U.S. Dept. of Energy), "Data Collection Handbook to Support Modeling the Impacts of Radioactive Material in Soil." ANL/EAIS–8. Washington, DC:, April 1993.

TABLE OF CONTENTS

5 OPERATIONS 5-1
5.1 Corporate Organization and Administrative Procedure 5-1
5.1.1 Board of Directors 5-2
5.1.2 President and Chief Executive Officer 5-2
5.1.3 General Manager 5-2
5.1.4 Manager of Environmental, Health and Safety 5-3
5.1.5 Radiation Safety Officer 5-3
5.1.6 Radiation Safety Technicians 5-4
5.1.7 ALARA Program Responsibilities 5-4
5.1.7.1 Management Responsibilities Within the ALARA Program 5-4
5.1.7.1.1 Radiation Safety Officer ALARA Responsibility 5-5
5.1.7.1.2 Supervisor ALARA Responsibility 5-5
5.1.7.1.3 Worker ALARA Responsibility 5-6
5.1.8 Reporting Procedures 5-6
5.2 Management Control Program 5-6
5.2.1 Operating Procedures 5-7
5.2.2 Radiation Work Permits 5-7
5.2.3 Record Keeping and Retention 5-8
5.2.4 Performance-Based License Condition 5-9
5.2.5 Safety and Environmental Review Panel 5-10
5.2.5.1 SERP Review Procedures 5-10
5.2.5.2 Documentation of SERP Review Process 5-11
5.2.6 Reporting 5-12
5.3 Management Audit and Inspection Program 5-13
5.3.1 Radiation Safety Inspections 5-13
5.3.1.1 Daily Inspections 5-13
5.3.1.2 Weekly Inspections 5-14
5.3.1.3 Monthly RSO Reports 5-14
5.3.2 Annual ALARA Audits 5-14
5.4 Radiation Safety Staff Qualifications 5-15
5.4.1 Radiation Safety Officer Qualifications 5-15
5.4.2 Radiation Safety Technician Qualifications 5-16
5.5 Radiation Safety Training 5-16
5.5.1 Radiation Safety Training Program Content 5-17
5.5.1.1 Visitors 5-17
5.5.1.2 Contractors 5-17
5.5.1.3 Radiation Worker Training 5-17
5.5.1.4 Instruction Concerning Prenatal Exposure 5-18
5.5.2 Testing Requirements 5-18
5.5.3 On-the-Job-Training 5-19

5.5.4 Refresher Training 5-19
5.5.5 Training Records 5-19
5.6 Security 5-19
5.6.1 License Area and Plant Security 5-21
5.6.2 Transportation Security 5-21
5.7 Radiation Safety Controls and Monitoring 5-21
5.7.1 Effluent Control Techniques 5-22
5.7.1.1 Gaseous and Airborne Particulate Effluents 5-22
5.7.1.1.1 Radon Gas 5-22
5.7.1.1.2 Airborne Particulates 5-23
5.7.1.1.3 Laboratory Emissions 5-25
5.7.1.2 Liquid Effluents 5-25
5.7.1.2.1 Liquid Process Byproduct 5-25
5.7.1.2.2 Groundwater Restoration 5-26
5.7.1.3 Spill Contingency Plans 5-26
Surface Releases 5-26
Sub-surface Releases 5-27
5.7.2 External Radiation Exposure Monitoring Program 5-28
5.7.2.1 Gamma Surveys 5-28
5.7.2.2 Beta Surveys 5-29
5.7.2.3 Personnel Dosimetry 5-30
5.7.3 In-Plant Airborne Radiation Monitoring Program 5-31
5.7.3.1 Airborne Uranium Particulate Monitoring 5-31
5.7.3.2 Radon Progeny Concentration Monitoring 5-35
5.7.3.3 Respiratory Protection Program 5-35
5.7.4 Exposure Calculations 5-36
5.7.4.1 Natural Uranium Internal Exposure 5-36
5.7.4.1.1 Time of Exposure Determination 5-37
5.7.4.1.2 Airborne Uranium Activity Determination 5-38
5.7.4.2 Radon Progeny Internal Exposure 5-38
5.7.4.2.1 Time of Exposure Determination 5-38
5.7.4.2.2 Radon Progeny Concentration Determination 5-39
5.7.4.3 External Exposure 5-39
5.7.4.4 Prenatal and Fetal Exposure 5-40
5.7.4.5 Exposure Recording and Reporting 5-41
5.7.5 Bioassay Program 5-42
5.7.6 Contamination Control Program 5-42
5.7.6.1 Surveys for Surface Contamination in Restricted (Plant) Areas 5-43
5.7.6.1.1 Process Area 5-43
5.7.6.1.2 General Plant and Unrestricted Areas 5-44
5.7.6.1.3 Special Surveys during Maintenance Activities 5-44
5.7.6.2 Surveying Skin and Personal Clothing 5-44

5.7.6.2.1 Response to Identification of Personnel Contamination in Excess of Background 5-45
5.7.6.3 Surveys for Release of Equipment to Unrestricted Areas 5-46
5.7.6.3.1 Methods and Procedures 5-46
5.7.6.3.2 Contamination Limits for Release of Equipment and Materials from Restricted Areas 5-47
5.7.6.3.3 Contamination Limits for Release of Equipment and Materials From Restricted Areas 5-47
5.7.6.4 Survey Methods and Instrumentation 5-48
5.7.6.5 Routine Daily Inspections, and Qualifications of Personnel Performing Contamination Surveys 5-49
5.7.7 Airborne Effluent and Environmental Monitoring Programs 5-49
5.7.7.1 Air Particulate 5-49
5.7.7.2 Radon 5-50
5.7.7.3 Surface Soil 5-50
5.7.7.4 Sediment 5-51
5.7.7.5 Subsurface Soil 5-51
5.7.7.6 Vegetation 5-51
5.7.7.7 Direct Radiation 5-52
5.7.7.8 Deep Disposal Well Monitoring 5-52
5.7.7.9 Fish 5-52
5.7.8 Groundwater/Surface Water Monitoring Program 5-52
5.7.8.1 Groundwater Monitoring 5-53
5.7.8.1.1 Private Well Monitoring 5-53
5.7.8.1.2 Production Unit Baseline Sampling 5-53
5.7.8.1.3 Monitoring Well Baseline Water Quality 5-54
5.7.8.1.4 Production Unit Hydrologic Data Package 5-55
5.7.8.1.5 Operational Upper Control Limits and Excursion Monitoring 5-55
5.7.8.1.6 Excursion Verification and Corrective Action 5-57
5.7.8.2 Surface Water Monitoring 5-58
5.7.9 Quality Assurance Program 5-59
5.7.9.1 Quality Assurance Plan – Operating Procedures and Instructions 5-61
5.8 References 5-70

List of Tables

Table 5-1: Radiation Detectors 5-64
Table 5-2: Environmental Air Monitoring Dose Detection Limits – Solubility Class 5-65
Table 5-3: Environmental Air Monitoring Dose Detection Limits 5-66
Table 5-4: Summary of the Major Elements of the Operational Environmental Monitoring Program 5-67

List of Figures

Figure 5-1: AUC Organizational Chart 5-68
Figure 5-2: Radiological Survey Locations 5-69

5 OPERATIONS

AUC is committed to conducting all operations in conformance with applicable laws, regulations, and requirements of the NRC and other regulatory agencies. The responsibilities described below have been designed to ensure compliance and further implement AUC's policy for providing a safe working environment with cost effective incorporation of the philosophy of maintaining radiation exposures As Low As Reasonably Achievable (ALARA). In addition to this section these operations encompass a variety of discussions found in this document including:

- Section 2.7 of this TR (Hydrology) and 3.4 of the ER (Water Resources);
- Section 2.9 of this TR (Baseline Radiological Characteristics);
- Section 3.4 of this TR (Instrumentation and Control);
- Section 4 of this TR (Effluent Control Systems);
- Section 7 of this TR (Environmental Effects);
- Section 3.11 of the ER (Public and Occupational Health);
- Section 4 of the ER (Potential Environmental Impacts);
- Section 6 of the ER (Mitigation); and
- Section 7 of the ER (Radiological, Physiochemical, Ecological, Historic and Cultural Monitoring, and QA Program).

5.1 Corporate Organization and Administrative Procedure

AUC will maintain a performance-based approach to the management of the environment and employee health and safety, including radiation safety. Figure 5-1 is a partial organization chart for AUC with respect to the operation of the proposed Reno Creek Project (Proposed Project) and associated operations and represents the management levels that play a key part in the Radiation Protection Program (RPP). Personnel identified are responsible for the development, review, approval, implementation, and adherence to operating procedures, programs, environmental and groundwater monitoring programs as well as routine and non-routine maintenance activities. Individuals in the positions identified in the Organizational Chart, Figure 5-1, may also serve a functional part of the Safety and Environmental Review Panel (SERP) described in Section 5.2.5 of this TR.

In accordance with NUREG-1569, Section 5.1.3, AUC will, to the extent possible, utilize administrative procedures which conform with Regulatory Guide 8.2 (NRC, 1973) and with Regulatory Guide 4.15 (NRC, 1979).

5.1.1 Board of Directors

The Board of Directors has the ultimate responsibility and authority for setting corporate policy and related procedural guidance but delegates (assigns) ultimate responsibility and authority for occupational and radiation safety, environmental protection, and compliance with all USNRC regulations, license conditions and all state and local regulations/permit conditions to AUC's management as described below.

5.1.2 President and Chief Executive Officer

The President and Chief Executive Officer (CEO) is responsible for interpreting and acting upon the Board of Director's policy and procedural decisions. The President and CEO are empowered by the Board of Directors to have the responsibility and authority for the radiation safety and environmental compliance programs at all AUC facilities. The President and CEO is directly responsible for ensuring that AUC personnel comply with industrial safety, radiation safety, and environmental protection programs as established in the AUC Program. The President and CEO is also responsible for company compliance with all regulatory license conditions/stipulations, regulations and reporting requirements. The President and CEO has the responsibility and authority to terminate immediately any activity that is determined to be a threat to employees or public health, the environment, or potentially a violation of state or federal regulations.

5.1.3 General Manager

The General Manager is responsible for management of all company operations at the Proposed Project. In this role, the General Manager has the responsibility and authority for the radiation safety and environmental compliance programs. The General Manager is responsible for ensuring that AUC personnel comply with industrial safety, radiation safety, and environmental protection programs as established in the AUC Program. The General Manager is also responsible for compliance with all regulatory license conditions/stipulations, regulations and reporting requirements. The General Manager is responsible for all uranium production activity at the Proposed Project site. All site operations, maintenance, construction, environmental health and safety, and support groups report directly to the General Manager. In addition to production activities, the General Manager is also responsible for implementing any industrial and radiation safety and environmental protection programs associated with operations. The General Manager is authorized to immediately implement any action to correct or prevent hazards. The General Manager has the responsibility and the authority to suspend, postpone or modify, immediately if necessary, any activity that is determined to

be a threat to employees, public health, the environment, or potentially a violation of state or federal regulations. The General Manager reports directly to the President and CEO.

5.1.4 Manager of Environmental, Health and Safety

The Manager of Environmental, Health and Safety is responsible for all radiation protection, health and safety, and environmental programs as stated in the RPP and for ensuring that AUC complies with all applicable regulatory requirements. The Manager of Environmental, Health and Safety reports directly to the General Manager and supervises the Radiation Safety Officer (RSO) to ensure that the radiation safety and environmental monitoring and protection programs are conducted in a manner consistent with regulatory requirements. This position assists in the development and review of radiological and environmental sampling and analysis procedures and is responsible for routine auditing of the programs. The Manager of Environmental, Health, and Safety has no production-related responsibilities. The Manager of Environmental, Health and Safety also has the responsibility to advise the President and CEO on matters involving radiation safety and to implement changes and/or corrective actions involving radiation safety authorized by the President and CEO. The Manager of Environmental, Health and Safety is AUC's QA Manager.

5.1.5 Radiation Safety Officer

The RSO is responsible for the development, administration, and enforcement of all radiation safety programs in accordance with the facility license, Regulatory Guide 8.31, Section 1.2 (NRC, 2002), and all other applicable regulations and guidance. The RSO is authorized to conduct inspections and to immediately order any change necessary to preclude or eliminate radiation safety hazards and/or maintain regulatory compliance. The RSO is responsible for the implementation of all on-site environmental programs, including emergency procedures, training programs for both the staff and the Radiation Safety Technicians, and sampling and inspection processes. The RSO inspects facilities to verify compliance with all applicable requirements in the areas of radiological health and safety. The RSO works closely with all supervisory personnel to review and approve new equipment and changes in processes and procedures that may affect radiological safety, and to ensure that established programs are maintained. The RSO is also responsible for the collection and interpretation of employee exposure monitoring. The RSO makes recommendations to improve radiological safety-related controls, as well as to ensure appropriate quality assurance/quality control for all health and environmental radiological monitoring programs. The RSO cannot be overruled by other members of the management team on any decision regarding radiation safety. The RSO has no production related responsibilities and reports directly to the Manager of Environmental, Health and Safety.

5.1.6 Radiation Safety Technicians

The Radiation Safety Technician(s) (RST) will assist the RSO with the implementation of the radiological and industrial safety programs. The RST is responsible for the orderly collection and interpretation of all monitoring data, including data from radiological safety and environmental programs. The RST reports directly to the RSO and must satisfy prescribed training requirements.

5.1.7 ALARA Program Responsibilities

As defined in 10 CFR Part 20, ALARA means making every reasonable effort to maintain exposures to radiation as far below the dose limits in this part as is practical consistent with the purpose for which the licensed activity is undertaken, taking into account the state of technology, the economics of improvements in relation to state of technology, the economics of improvements in relation to benefits to the public health and safety, and other societal and socioeconomic considerations, and in relation to utilization of nuclear energy and licensed materials in the public interest.

The ALARA program is designed to keep exposures to all radioactive materials and other hazardous material as low as possible to as few personnel as possible, including contractors, visitors and the general public. The ALARA program will take into account state-of-the-art-technology, engineering and the economics of improvements in relation to benefits for health and safety. In order for an ALARA program to correctly function, all individuals including management, supervisors, health physics staff, and workers, must take part in and share responsibility for keeping all exposures ALARA. This policy addresses the regulatory requirements and describes the responsibilities of each level in the organization.

5.1.7.1 Management Responsibilities within the ALARA Program

Referencing Regulatory Guide (REGULATORY GUIDE) 8.31 (USNRC, 2002) guidance, AUC senior management is responsible for the development, implementation and enforcement of applicable rules, policies, and procedures as directed by regulatory agencies and company policies. These responsibilities include the following:

- The development of a strong commitment to and continuing support of the implementation and operations of the ALARA program;
- An Annual Audit Program which reviews radiation monitoring results, procedural, and operational methods;
- A continuing evaluation of the RPP including adequate staffing and support; and

- Proper training and discussions that address the ALARA program and its function to all facility employees and, when appropriate, to contractors and visitors.

5.1.7.1.1 Radiation Safety Officer ALARA Responsibility

The RSO is responsible for ensuring the technical adequacy of the radiation protection program, implementation of proper radiation protection measures, and the overall surveillance and maintenance of the ALARA program. The RSO is assigned the following:

- The responsibility for the development and administration of the ALARA program;
- Enforcement of regulations and administrative policies that affect the Radiological Protection Program;
- Assist with the review and approval of new equipment, process changes or operating procedures to ensure that the plans do not adversely affect the Radiological Protection Program;
- Maintain equipment and surveillance programs to assure continued implementation of the ALARA program;
- Assist with conducting an Annual ALARA Audit, as discussed in Section 5.3.2 of this TR, to determine the effectiveness of the program and make any appropriate recommendations or changes as may be dictated by the ALARA philosophy;
- Periodically review all existing operating procedures involving or potentially involving any handling, processing, or storing of radioactive materials to ensure the procedures are ALARA and do not violate any newly established or instituted radiation protection practices; and
- Conduct daily inspections of pertinent facility areas to observe that general radiation control practices, hygiene, and housekeeping practices are in line with the ALARA principle.

5.1.7.1.2 Supervisor ALARA Responsibility

Supervisors have front line responsibility for implementing all safety programs including the ALARA program. Each supervisor will be trained and instructed in the general radiation safety practices and procedures. Their responsibilities include:

- Adequate training to implement the general philosophy behind the ALARA program;
- Provide direction and guidance to subordinates in ways to adhere to the ALARA program;

- Enforcement of rules and policies as directed by the Radiological Protection Program, which implement the requirements of regulatory agencies and company management; and
- Seek additional help from management and the RSO should radiological problems be deemed by the supervisor to be outside the sphere of training.

5.1.7.1.3 Worker ALARA Responsibility

Because success of both the radiation protection and ALARA programs are contingent upon the cooperation and adherence to those policies by the workers themselves, the facility employees must be responsible for certain aspects of the program in order for the program to accomplish its goal of keeping exposures as low as reasonably achievable. Worker responsibilities include:

- Adherence to all rules, notices, and operating procedures as established by management and the RSO through the RPP;
- Making valid suggestions which might improve the radiation protection and ALARA programs;
- Reporting promptly, to an immediate supervisor, any malfunction of equipment or violation of procedures which could result in an increased radiological hazard;
- Proper use of protective equipment; and
- Proper performance of required contamination surveys when leaving restricted areas.

5.1.8 Reporting Procedures

In the event of a spill or release it is the responsibility of the General Manager or designee to report the incident in accordance with license requirements, 10 CFR Part 20, Subpart M and 10 CFR Part 40.60.

5.2 Management Control Program

This section describes the management control program put in place within the AUC organization to ensure activities will be conducted in a manner to protect the health and safety of employees, the public, and the environment.

5.2.1 Operating Procedures

AUC will develop a management control program of written standard operating procedures (SOP) for all activities that involve handling, processing, or storing radioactive materials. Written SOPs will also be developed for emergency response procedures, industrial and radiation safety protection procedures, and environmental monitoring. All procedures involving radioactive material will be reviewed and approved by the RSO or individual with equal qualifications prior to implementation and will be reviewed periodically by the RSO. A copy of the written SOP will be stored in the designated area in which it is to be used.

The purpose of developing a management control program is to assure any activities affecting health, safety, and the environment will be conducted in accordance with the established written procedures. SOPs will be developed and implemented prior to ISR operations.

5.2.2 Radiation Work Permits

A standard operating procedure will be prepared specifically addressing the Radiation Work Permit (RWP) process. RWPs will be issued for non-routine activities with a potential for exposure to radioactive materials for which no operating procedure exists in the CPP or wellfields. In such cases, it is imperative that the radiological hazards be communicated to the workers so that they may take proper precautions to minimize potential exposures.

To ensure these precautions are met and to ensure that situations requiring an RWP are understood by all employees:

- The scope of work for specific areas and assignments will be reviewed before work begins to identify radiological conditions, personal protective equipment (PPE) requirements, appropriate control methods, and other hazards from adjacent equipment or areas;
- The RWP form will be completed, reviewed by all attendees, and approved in writing by the RSO or RST;
- Workers will be properly trained and supervised in advance of and during the work assignment to maintain radiation exposures ALARA;
- Workers will be made aware of the existing conditions, mitigation tools, and required monitoring and controls to minimize dose; and
- All workers will receive initial and annual refresher training on the fundamentals of RWP requirements.

The RSO or qualified designee must review and sign the RWP before initiation of covered work. In cases where tasks involve similar and temporarily recurring radiological protection measures, the RSO can issue a Standing Radiation Work Permit (SRWP). The SRWP will contain the same information that is outlined in the RWP, and must be reviewed and approved in writing by the RSO or qualified designee. The SRWP will be replaced by an SOP once a specific task has been determined to be of a more permanent nature.

5.2.3 Record Keeping and Retention

Instructions for the proper maintenance, control, and retention of records will be developed and will be consistent with the requirements of 10 CFR 20 Subpart L and 10 CFR §40.61 (d) and (e). The following specific records will be maintained until license termination:

- Records of on-site radioactive waste disposal by deep well injection or land application under 10 CFR §20.2002 and §20.2007;
- Records of surveys, calibrations, personnel monitoring, and bioassays as required in 10 CFR §20.2103;
- Records required by 10 CRF Part 40, Appendix A, Criteria 8 and 8A and included in Regulatory Guide 3.11.1;
- Records containing information pertinent to decommissioning and reclamation such as descriptions of spills, excursions, contamination events, etc. including the dates, locations, areas, or facilities affected, assessments of hazards, corrective and cleanup actions taken, and potential locations of inaccessible contamination;
- Records of information related to site and aquifer characterization, hydrology and geology with emphasis on conditions that could contribute to ground-water or surface-water contamination, and location of surface impoundments;
- As-built drawings or photographs of structures, equipment, restricted areas, well fields, areas where radioactive materials are stored, and any modifications showing the locations of these structures and systems through time;
- Drawings of areas of possible inaccessible contamination, including features such as buried pipes or pipelines;
- Pre-operational background radiation levels at and near the site; and
- Records of the radiation protection program including program revisions, standard operating procedures, radiation work permits, training and qualification records, SERP proceedings, and audits.

Records will be maintained in hard-copy or electronic versions, and will be available on site, protected in a controlled environment. Electronic copies will be maintained with

back up protection. Records will be readily retrievable for NRC inspections. Duplicates of records will be maintained off site in a secure location. Safeguards will be established to prevent against tampering, loss, or deterioration.

5.2.4 Performance-Based License Condition

With this license application AUC is requesting a Performance Based License (PBL), referencing guidance located in NUREG-1569, Section 5, *Standard Review Plan for In Situ Leach Uranium Extraction License Applications,* and NUREG/CR-6733, *A Baseline Risk-Informed, Performance-Based Approach for In Situ Leach Uranium Extraction Licenses*. Under a license containing a PBL Condition, AUC would be allowed, without specific prior NRC approval or the need to obtain a License Amendment, to:

- Make changes to the facility or process as presented in the license application (as updated);
- Make changes to the procedures presented in the license application (as updated); and
- Conduct tests or experiments not presented in the license application (as updated).

A License Amendment and/or NRC approval will be necessary prior to implementing a proposed change, test or experiment (hereinafter called the change) if the change would:

- Result in any appreciable increase in the likelihood or consequences of an accident evaluated in the license application (as updated);
- Result in any appreciable increase in the likelihood or consequences of a malfunction of a structure, system, or component (SSC) important to safety, evaluated in the license application (as updated);
- Create a possibility for an accident of a different type than any evaluated in the license application (as updated);
- Create a possibility for a malfunction of an SSC with a different result than evaluated in the license application (as updated);
- Result in a departure from the method of evaluation described in the license application (as updated) used in establishing the final safety evaluation report (SER) or the environmental assessment (EA) or technical evaluation reports (TER) or other analysis and evaluations for license amendments; and
- For purposes of this paragraph as applied to this license, SSC means any SSC that has been referenced in a staff SER, TER, EA, or environmental impact statement (EIS) and supplements and amendments thereof.

AUC will be required to obtain a license amendment if the change is inconsistent with the NRC staff conclusions in the Proposed Project's SER, TER, EIS, or EA. This will include all supplements, amendments and updates included with these documents.

5.2.5 Safety and Environmental Review Panel

The Safety and Environmental Review Panel (SERP) will make the determination of compliance concerning the conditions discussed in Section 5.2.4. In accordance with NUREG-1569, Section 5, AUC will establish a SERP that will consist of at least three individuals. One member will have expertise in management and will be responsible for managerial and financial approval for changes; a second member will have expertise in operations and/or construction and will have responsibility in implementing any operational changes; and a third member will be the RSO, or equivalent, with the responsibility for assuring that changes conform to radiation safety and environmental requirements. Any additional member will be selected in accordance with Section 5.1.3 of NUREG 1569. AUC verifies that sufficient independence of the SERP is guaranteed to allow all significant safety issues to be raised with senior management, without fear of repercussion.

The SERP will be responsible for monitoring proposed changes at the facility. As such, the SERP will be responsible for insuring that any such changes result in no additional possibility for an accident of a different type than previously evaluated in the license application, malfunction of a structure, system, control, or departure from the method of evaluation described in the license application. Obtaining a license amendment pursuant to 10 CFR 40.44 will not be required for a specific action, if these requirements are met.

5.2.5.1 SERP Review Procedures

The AUC SERP will implement the following review procedures for the evaluation of all appropriate changes to the facility operations. The SERP may delegate any portion of these responsibilities to a committee of two or more members of the SERP. Any committees so constituted will report their findings to the full SERP for a determination of compliance with Section 5.2.4 of this chapter. In their documented review of whether a potential change is allowed under the PBL or Performance Based License Condition (PBLC) without a license amendment, the SERP will consider the following:

Current NRC License Requirements

The SERP will conduct a review of the most current NRC license conditions to assess which, if any, conditions will have an impact on or be impacted by the potential SERP action. If the SERP action will conflict with a specific license requirement, then a license

amendment will be necessary before initiating the change. This review will include information included in the approved license application as updated.

Ability to Meet NRC Regulations

The SERP will determine if the change, test, or experiment conflicts with applicable NRC regulations (example: 10 CFR Parts 20 and 40 requirements). If the SERP action conflicts with NRC regulations, a license amendment will be necessary.

Licensing Basis

The SERP will review whether the change is consistent with NRC's conclusions regarding actions analyzed and selected in the licensing basis. Documents that the SERP must review in conducting this evaluation include any SERs, TERs, EAs, or EISs prepared to support issuance of or amendments to the license. The RSO will maintain a current copy of all pertinent documents for review by the SERP during these evaluations.

Financial Assurance

The SERP will review the Proposed Project to determine if any adjustment to the financial surety arrangement or approved amount is required. If the Proposed Project will require an increase to the existing surety amount, the financial surety instrument must be increased accordingly. The surety estimate must be approved through a license amendment by the NRC.

Essential Safety and Environmental Commitments

The SERP will assure that there is no degradation in the essential safety or environmental commitments in the license application.

5.2.5.2 Documentation of SERP Review Process

After the SERP conducts the review process for a Proposed Project, it will document those findings, recommendations, and conclusions in a written report format. All members of the SERP shall sign concurrence on the final report. If the report concludes that the action meets the appropriate PBL or PBLC requirements and does not require a license amendment, the Proposed Project may then be implemented. If the report concludes that a license amendment is necessary before implementing the action, the report will document the reasons why, and what course AUC plans to pursue. The SERP report shall include the following:

- A description of the proposed change, test, or experiment;

- A listing of all SERP members conducting the review and their qualifications (if a consultant or other member not previously qualified);
- The technical evaluation of the Proposed Project including all aspects of the SERP review procedures listed above;
- Conclusions and recommendations;
- Signature approvals of the SERP members; and
- Any attachments, such as all applicable technical, environmental, or safety evaluations, reports, or other relevant information including consultant reports which will be of the same quality as NRC submitted documents.

All SERP reports and associated records of any changes made pursuant to the PBL or PBLC shall be maintained until termination of the NRC license. AUC understands that all SERP reports are of the same importance as documents submitted to the NRC.

On an annual basis, AUC will submit a report to the NRC that describes all changes made pursuant to the PBL or PBLC. The report will include a summary of the SERP evaluation of each change. In addition, AUC will annually submit replacement pages of the License Application or supplementary information. Each replacement page will include both a change indicator for the area of change, (e.g., bold marking vertically in the margin adjacent to the portion actually change), and a page change identification, (date of change or change number, or both).

5.2.6 Reporting

Spills, leaks, or excursions and environmental monitoring reporting will be consistent with the requirements of 10 CFR 20 Subpart M and 10 CFR §40.64, 10 CFR §40.65 and §40.66. The following specific reporting requirements will be implemented:

- Reports of theft or loss of licensed material (10 CFR §20.2201);
- Notification of incidents (10 CFR §20.2202);
- Reports of exposures, radiation levels, and concentrations of radioactive material exceeding the constraints or limits (10 CFR §20.2203);
- Reports of planned special exposures (10 CFR §20.2204);
- Reports to individuals of exceeding dose limits (10 CFR §20.2205);
- Reports of individual monitoring (10 CFR §20.2206);
- Reports of transactions involving nationally tracked sources (10 CFR §20.2207);
- Reports (10 CFR §40.64);
- Effluent monitoring reporting requirements (10 CFR §40.65); and

- Requirements for advance notice of export shipments of natural uranium (U-Nat) (10 CFR §40.66).

The following will be reported to the NRC Headquarters Project Manager by telephone or email within 48 hours of the event:

- Process Chemical Spills;
- Backup Storage Pond Leaks; or
- Excursion of 11e.(2) byproduct material.

The 48 hour notification shall be followed by a submitted written report to the NRC Headquarters Project Manager, detailing the conditions leading to the spill or incident, corrective actions, and results achieved within 30 days of initial notification.

An annual report will be prepared and submitted to NRC based on the guidance contained in NUREG-1569. The annual report will contain the following information:

- ALARA audit report;
- Land use survey;
- Summary of monitoring data;
- Corrective action program report;
- Semiannual effluent and environmental monitoring report required by 10 CFR §40.65; and
- Safety and Environmental Review Panel information.

5.3 Management Audit and Inspection Program

The following internal inspections, audits and reports will be performed for the Proposed Project operations.

5.3.1 Radiation Safety Inspections

5.3.1.1 Daily Inspections

The RSO or qualified designee will conduct daily walkthrough inspections of all active plant areas including storage areas. Inspection allows for a survey of procedure compliance, contamination control, and housekeeping efforts. An individual can qualify for daily walkthrough inspection if specific training is received from the RSO, and the training is documented in the individual's training records and is available for NRC

inspection. Training will include all procedures included in the SOP for the daily inspection. In the event the qualified individual notes any significant radiological hazards, the individual will immediately report the findings to the RSO.

5.3.1.2 Weekly Inspections

The RSO or qualified designee will conduct weekly inspections to observe radiation safety practices, procedural compliance, control practices and review any required changes in procedures and equipment

5.3.1.3 Monthly RSO Reports

A written summary of monthly radiological activities and monitoring data will be provided to management. The summary will also include information pertaining to personnel monitoring, radiation survey records, trends for ALARA consideration, and descriptions of any areas in the process or safety programs that could be improved, along with recommended corrective actions.

5.3.2 Annual ALARA Audits

AUC management will provide for annual audits of the radiation protection and ALARA program consistent with recommendations contained in NRC Regulatory Guide 8.31, and will submit a written report to corporate management summarizing such audits. The audit team shall include members knowledgeable concerning the radiation protection program at the facility. The RSO may accompany the audit team, but may not be a member. Implementations of the recommendations for reducing employee exposure or ALARA improvements will be reviewed with the audit team.

The annual ALARA audit report will summarize the following:

- Employee exposure records;
- Bioassay results, inspection log entries, and summary reports of ISR and process inspections;
- Documented training program activities;
- Applicable safety meeting reports;
- Radiological survey and sampling data;
- Reports on any overexposure of workers; and
- Operating procedures that were reviewed during this time period.

The ALARA audit report will specifically discuss the following:

- Trends in personnel exposures;
- Proper use, maintenance, and inspection of equipment used for exposure control; and
- Recommendations on reasonably achievable ways to reduce personnel radiation exposures.

The ALARA audit report will be submitted to and reviewed by the General Manager and the RSO. Implementations of the recommendations to further reduce employee exposures, or improvements to the ALARA program, will be reviewed with the ALARA auditor.

5.4 Radiation Safety Staff Qualifications

Qualifications for the RSO and RST will utilize guidance from Regulatory Guide 8.31 (NRC, 2002). The following qualifications are the minimum requirements for the RSO and RST.

5.4.1 Radiation Safety Officer Qualifications

The minimum qualifications for the RSO are as follows:

- Education - A Bachelor's Degree in physical sciences, industrial hygiene, or engineering, from an accredited college or university, or an equivalent combination of training and relevant experience in uranium mill radiation protection. Two years of relevant experience are generally considered equivalent to one year of academic study;
- Health Physics Experience - At least one year of work experience, relevant to uranium recovery operation, in applied health physics, radiation protection, industrial hygiene, or similar. This experience must involve actual and significant work with radiation detection and measurement equipment, not strictly administrative or “desk” work;
- Specialized Training - At least four weeks of specialized classroom training in health physics specifically applicable to uranium milling. In addition, the RSO will attend refresher training on uranium mill health physics every two years; and
- Specialized Knowledge - A thorough knowledge of the proper application and use of all health physics equipment used at the Proposed Project, the chemical and analytical procedures used for radiological sampling and monitoring, methodologies used to calculate personnel exposure to uranium and its daughters, and a thorough understanding of the uranium recovery process and equipment

used in the CPP, and how the hazards are generated and controlled during the uranium recovery process.

5.4.2 Radiation Safety Technician Qualifications

The Radiation Safety Technician (RST) will have one of the following combinations of education, training and experience:

- Education - An associate degree or two or more years of study in the physical sciences, engineering or a health-related field.
  - Training - At least a total of four weeks of generalized training (up to two weeks may be on-the-job training) in radiation health protection applicable to uranium recovery operations; and
  - Experience - One year of work experience using sampling and analytical laboratory procedures that involve health physics, industrial hygiene, or industrial safety measures to be applied in a uranium recovery operation.
- Education - A high school diploma;
  - Training - A total of at least three months of specialized training (up to one month may be on-the-job training) in radiation protection relevant to uranium; and
  - Experience - Two years of relevant work experience in applied radiation protection.

The RST will demonstrate a working knowledge of the proper operation of health physics instruments used in the facility, surveying and sampling techniques, and personnel dosimetry requirements.

5.5 Radiation Safety Training

All site employees and contractor personnel at the Proposed Project will be instructed in a training program covering the risks of exposure to radiation and radioactive materials, and the fundamentals of protection against exposure to uranium and its daughters, before commencing work. The training program will be administered in keeping with standard radiological protection guidelines and the guidance provided in NRC Regulatory Guide 8.29, USNRC Regulatory Guide 8.31 Section 2.5, and NRC Regulatory Guide 8.13. The technical content of the training program will be determined by the RSO. The RSO or a qualified designee will conduct all radiation safety training.

5.5.1 Radiation Safety Training Program Content

5.5.1.1 Visitors

All visitors to the Proposed Project who have not received documented training will be escorted by AUC staff properly trained and knowledgeable about the hazards of the facility. At a minimum, visitors will be instructed specifically on what is expected of them to avoid possible hazards in the areas of the facilities that they are visiting.

5.5.1.2 Contractors

Any contractors having work assignments at the Proposed Project will be given appropriate radiation safety training and safety instructions. Contract workers who will be performing work on heavily contaminated equipment will receive the same training and radiation safety instructions normally required of the Proposed Project workers as discussed in Section 5.5.1.3 in accordance with NRC Regulatory Guide 8.31. Only job-specific radiation safety instructions will be necessary for contract workers who have previously received full training during prior work assignments at the facility.

5.5.1.3 Radiation Worker Training

All AUC employees and contractors will receive training as radiation workers. The program will incorporate the following topics recommended in NRC Regulatory Guide 8.31:

- Fundamentals of health protection
  - The radiologic and toxic hazards of exposure to uranium and its daughters;
  - How uranium and its daughters enter the body (inhalation, ingestion, and skin penetration); and
  - Why exposures to uranium and its daughters should be kept ALARA.
- Personal hygiene at uranium facilities
  - Wearing protective clothing;
  - Using respiratory protection equipment correctly;
  - Eating, drinking, and smoking only in designated areas; and
  - Using proper methods for decontamination (i.e., showers).
- Facility-provided protection
  - Ventilation systems and effluent controls;
  - Cleanliness of the work place;
  - Features designed for radiation safety for process equipment;

  - Standard operating procedures;
  - Security and access control to designated areas;
  - Electronic data gathering and storage; and
  - Automated processes.
- Health protection measurements
  - Measurements of airborne radioactive material;
  - Bioassay to detect uranium (urinalysis);
  - Surveys to detect contamination of personnel and equipment; and
  - Personnel dosimetry.
- Radiation protection regulations
  - Regulatory authority of NRC, MSHA and state;
  - Employee rights in 10 CFR Part 19; and
  - Radiation protection requirements in 10 CFR Part 20.
- Emergency procedures.

All new workers, including supervisors, will be given specialized instruction on the radiation safety and health hazards, and on non-radiological hazards, of the specific jobs they will perform. This instruction is provided in the form of individualized on-the-job training, and documented. Retraining is to be performed annually and documented.

5.5.1.4 Instruction Concerning Prenatal Exposure

Female workers who require training under 10 CFR §19.12 will be provided with training that meets the guidance contained in NRC Regulatory Guide 8.13. In addition, they will receive a copy of NRC Regulatory Guide 8.13. Supervisors who oversee female workers will also receive training on NRC Regulatory Guide 8.13.

5.5.2 Testing Requirements

A written or oral test with questions directly relevant to the principals of radiation safety and health protection will be given to each worker. The instructor will discuss any incorrect answers to test questions with the worker until the worker understands the correct answer. Workers who fail the exam will be retested after receiving additional training. All test results will be maintained on file.

All permanent workers will be provided with an abbreviated annual retraining course. All test results will be maintained on file upon successful completion. Retraining will include review of any safety problems encountered during the year, changes in regulations and license conditions, exposure trends and other currently applicable topics.

5.5.3 On-the-Job-Training

In order to fulfill the requirements of Section 5.4.2, on-the-job training will be provided to RSTs in radiation exposure monitoring and exposure determination programs, instrument calibration, plant inspections, posting requirements, respirator programs and radiation safety procedures.

5.5.4 Refresher Training

Following initial radiation safety training, all permanent employees and long-term contractors will receive on-going radiation safety training as part of their annual refresher training program. In addition, the RSO may include more training during periodic safety meetings. This on-going training will be used to discuss problems and questions that have arisen, changes in any relevant information or regulations, exposure trends, and other pertinent topics.

The RSO will receive a minimum of 40 hours of refresher training (total) biannually in health physics and related subjects. This training may involve multiple training events over the two-year period.

5.5.5 Training Records

Records of training will be kept until license termination for all employees trained as radiation workers (i.e., occupationally exposed employees). After completion of training, employees and contractors will be required to sign a statement that they have received radiation safety training. The statement will outline the extent of the training and the dates when the training was received. The statement will also be signed by the instructor. These statements, as well as records of the training program syllabus, dates of administration, attendance lists, and records of exam results, will be maintained until license termination.

5.6 Security

In accordance with 10 CFR Part 20, Subpart I, AUC is committed to providing a security program to prevent unauthorized entry to all controlled and restricted areas. A controlled area, as defined by 10 CFR Part 20, is an area outside of a restricted area but inside the site boundary, access to which can be limited by the licensee for any reason. Specifically, areas within the Proposed Project will be classified as follows:

- Controlled areas will be fenced to limit access to project associated operations and is estimated to encompass 481 acres or approximately 8 percent of the Proposed Project Area. Anticipated controlled areas include all fenced areas around the CPP, wellfields, backup pond, and DDWs. Restricted areas can be located within controlled areas;
- Restricted areas will control access to protect individuals from exposure to radiation and 11e.(2) byproduct materials including selected areas within the CPP building, 11e.(2) byproduct storage areas, backup pond, DDW buildings, and/or areas exceeding 2 mrem per hour; and
- Unrestricted areas are within the Proposed Project area to which access is neither limited nor controlled by the Proposed Action. These areas encompass approximately 5,576 acres or around 92 percent of the Proposed Project area.

This security program will include posting signs indicating presence of radioactive material and signs informing all personnel of any permits or requirements for entry into the specific posted area. AUC will also require daily inspections to ensure all licensed material is properly labeled and stored, and that locks are in place for all restricted plant and storage facilities in order to provide employees with a safe and secure working environment. The following are some of the passive and active security measures AUC will implement;

- All restricted areas will be fenced with high security fencing and/or structures locked;
- To prevent unauthorized access, all gates/doors for areas containing licensed material will contain appropriate signage and be locked when AUC staff members are not within the area;
- The Proposed Project area's main access gate will be locked and include coded and remote activated entry. The visitor entry area of the plant will be a secure area that does not allow free entry into the plant. All visitors and contractors will be required to sign in and receive appropriate safety training prior to being allowed entry into any controlled area. As described above in Section 5.5., records of all visitors will be kept by the AUC staff;
- AUC staff will monitor all Proposed Project access 24 hours a day, 7 days a week;
- Facility operators will conduct daily inspections of access controls;
- Prior to the initiation of operations, pertinent SOPs and related information will be shared with area first responders (police, fire, EMT, etc.); and
- All visitors will be required to have an AUC escort.

AUC will also maintain control of licensed material as defined in 10 CFR 20, Subpart I. Stored material will include all packaged uranium for shipment and 11e.(2) byproduct material.

All entrances to the proposed NRC licensed facility and all controlled areas will be conspicuously posted with the words "ANY AREA WITHIN THIS FACILITY MAY CONTAIN RADIOACTIVE MATERIAL," in order to be exempted from the requirements of 10 CFR 20.1902(e) for areas within the facility.

5.6.1 License Area and Plant Security

AUC will use passive controls in its security program concerning the production units and outer facility perimeter. AUC will include four-stranded barbed wire fencing (WDEQ Guideline 10, Type III) surrounding all wellfield areas and install cattle guards at entrances to help eliminate the possibility of livestock entering the area. The facility area will be enclosed using typical eight-foot security chain link fence equipped with a locking gate at the main entrance. All byproduct storage areas will also be fenced, locked, and display appropriated signage.

5.6.2 Transportation Security

AUC will routinely store and ship hazardous materials as defined by the U.S. DOT and 10 CFR 71.5 (Transportation of Licensed Material). AUC will strictly adhere to the packaging, shipping and training requirements contained in the DOT HMR. AUC will plan to use an outside contractor for all yellowcake shipments. AUC will require the contractor to be compliant with hazardous material transportation regulations and will follow requirements in the 49 CFR §172, Subpart I, Security Plans. All access to containers and vehicles where license material is located when not in storage will be locked, if possible, and under surveillance

5.7 Radiation Safety Controls and Monitoring

AUC has a strong corporate commitment to the effective implementation of the radiological control program at the Proposed Project facilities. This corporate commitment to maintaining personnel exposures ALARA will be incorporated into the radiation safety controls and monitoring programs described in the following sections. Requirements of 10 CFR 40.65 include biannual reporting to the NRC the quantity of each of the principal radionuclides released to unrestricted areas in liquid and in gaseous effluents during the previous six months of operation. AUC commits to monitor potential source area release points using MILDOS guidance in Regulatory Guide 3.59 to assist in calculating such dosages.

5.7.1 Effluent Control Techniques

5.7.1.1 Gaseous and Airborne Particulate Effluents

5.7.1.1.1 Radon Gas

The primary radioactive airborne effluent at the Proposed Project facility will be ^{222}Rn gas. Radon is found in the pregnant lixiviant that comes from the production units into the facility for extraction of uranium. The uranium will be recovered by passing the solution through fixed bed, pressurized, down-flow IX columns. Vents from the individual columns will be directed to a manifold that is exhausted to the atmosphere outside, high above the building, via an induced draft fan. It should be noted that these vents will only be open briefly during times of dewatering or filling. Since pressure must be maintained on the system to function properly at all other times, most of the ^{222}Rn entrained in the process solutions will be returned to the wellfields.

Venting any released ^{222}Rn gas to the atmosphere outside the plant minimizes employee exposure. The ^{222}Rn exhaust outlet will be positioned to minimize any chance of ^{222}Rn being recirculated into the air intakes which service the facility. Small amounts of ^{222}Rn may be released within the facility via solution spills, filter changes, ion exchange resin transfer, RO system operation during groundwater restoration, and maintenance activities. These are planned to be minimal ^{222}Rn gas releases, occurring on an infrequent basis. The exhaust system in the plant will further reduce employee exposure. The air in the plant is sampled for ^{222}Rn progeny to assure that concentrations of ^{222}Rn and ^{222}Rn progeny are maintained ALARA. Ventilation and effluent control equipment will be inspected for proper operation as recommended in NRC Regulatory Guide 3.56. Ventilation and effluent control equipment inspections will be conducted during radiation safety inspections as discussed in Section 5.3.1 of this TR.

Monitoring for combined plant and wellfield releases at the site airborne monitoring stations will be accomplished through the use of Track-Etch ^{222}Rn cups or equivalent as discussed in Section 5.7.7 of this TR. 10 CFR §20.1302 allows demonstration by measurement or calculation that the total effective dose equivalent (TEDE) to the individual likely to receive the highest dose from licensed operations does not exceed the annual dose limit of 100 mrem. Regulatory Guide 8.37, Section 3.3, notes that where monitoring effluent points is not practicable, a licensee should estimate the magnitude of these releases and include these estimated releases in demonstrating compliance with the annual dose limit.

AUC plans to calculate doses to individuals in the outdoor environment on and near the site, using NRC-accepted modeling approaches. AUC will compare the modeling results

with measured ^{222}Rn concentrations from established monitoring locations (the air particulate monitoring station locations). At those locations, AUC uses high-sensitivity Landauer track etch devices to measure integrated ^{222}Rn exposure. Comparisons to the set of baseline measurements developed during the licensing process, and comparisons to updated ^{222}Rn and progeny concentration and dose estimates developed using accepted modeling approaches, will provide an adequate estimate of dose to such individuals. Anticipated doses associated with eventual site operations are expected to be near-zero, but this approach will allow both calculation and measurement of any unexpected and significant increases in ^{222}Rn -related concentrations and doses during site operations.

More specifically, MILDOS-AREA will be used to model radiological impacts on human and environmental receptors (e.g. air and soil) using site-specific ^{222}Rn release estimates, meteorological and population data, and other parameters. Estimated radiological impacts resulting from routine site activities will be compared to applicable public dose limits as well as naturally occurring background levels as discussed in Section 7.4. The MILDOS model inputs will be used to estimate the ^{222}Rn released during operations to the environment, which will be reported in the Semiannual Radiological Effluent and Environmental Monitoring Reports required under 10 CFR §40.65.

On a semiannual basis, the actual operational history of the Proposed Project facility will be used to estimate ^{222}Rn releases for the period.

5.7.1.1.2 Airborne Particulates

Final processing of uranium to produce yellowcake will be performed in a vacuum dryer system. As described in TR Section 3 and Section 4, there are no emissions from these systems. By design, vacuum drying systems do not discharge any uranium when operating. The vacuum drying system is proven technology, which is being used successfully in several ISR sites where uranium oxide is being produced. As noted in NUREG-6733, vacuum dryer technology provides an emission control approach to ALARA at the source, which exceeds the 95 to 99 percent efficiency of multihearth dryers and “is designed to capture virtually all escaping particles". NUREG-1508 also notes that this technology will result in zero emissions, and does not require ventilation from the drying chamber to the atmosphere. Therefore, the use of a vacuum dryer is an emission control method that reduces emissions to levels that are ALARA and complies with the requirements of 10 CFR Part 40, Appendix A, Criterion 8. Because of the NRC recognition of the efficiency of vacuum dryers, additional sampling of the effluent from the vacuum dryer is considered unnecessary. Air particulate controls of the vacuum drying system include a filter housing, condenser, condensate tank, vacuum pump and packaging hood. This area will be controlled and restricted to authorized personnel only.

The filter housing is an air and vapor filtration unit mounted directly above the drying chamber so that any dry solids collected on the filter surfaces can be batch discharged back to the drying chamber with the dryer under vacuum to maintain higher negative pressures in the drying chamber. The filter housing can be heated to prevent condensation of water vapor during the drying cycle. It is kept under negative pressure by the vacuum system.

The condenser unit is located downstream of the bag house and is water cooled. It is used to remove the water vapor from the non-condensable gases coming from the drying chamber. The gases are moved through the condenser by the vacuum system. Any particulates that pass through the filter housing are wetted and entrained in the condensing moisture within this unit, and deposited in the condensate tank for recycling to the process.

The vacuum pump is a rotary water sealed unit that provides a negative pressure on the entire system during the drying cycle. It is also used to provide ventilation during transfer of the dry powder from the drying chamber to 55-gallon drums. The water seal of the rotary vacuum pump captures entrained particulate matter remaining in the gas streams, which can be recycled back into the process.

The packaging system is operated on a batch basis. When the yellowcake is dried sufficiently, it is discharged from the drying chamber through a bottom port into drums. A level gauge, a weigh scale, or other suitable device will be used to determine when a drum is full. Particulate capture is provided by a sealed hood that fits on the top of the drum, which is vented through a filter to the condenser and the vacuum pump system when the dried yellowcake is being transferred to drums.

The system will have sufficient instrumentation to operate automatically and to shut itself down if malfunctions such as heating or vacuum system failures occur. The system will alarm if there is an indication that the emission control system is not performing within operational specifications. If the system is alarms due to an emission control system problem, the operator will follow standard operating procedures to recover from the alarm condition. If the dryer is loaded, yellowcake will not be packaged until the emission control system is returned to service within specified operational conditions. Similarly, if the dryer is empty, it will not be reloaded until the emission control system is returned to service.

To ensure that the emission control system is performing within specified operating conditions, instrumentation will be installed to utilize an audible and/or visual alarm if the vacuum level is outside operating specifications. The emission control system will be monitored continuously and documented during drying operations. In the event this system fails, the operator will perform and document checks of the differential pressure

or vacuum every four hours. Additionally, during routine operations, the air pressure differential gauges for other emission control equipment will be monitored continuously and during dryer operations. If the emission control system detects that operational parameters are outside of determined normal criteria, the system will alarm operators in the CPP control room and notify operators of the parameters outside normal criteria limits.

During dryer maintenance, all work will normally be performed under a RWP unless a SOP has been prepared and approved. The RWP will specify control measures to minimize the release of airborne particulates, including but not limited to removal of yellowcake from system components and establishing airborne radioactivity areas before maintenance is begun.

During emergency situations such as fire or severe weather, the yellowcake dryer will be shut down in a safe configuration until the emergency has passed. Vacuum systems will be left in operation and the dryer room and associated entrance air locks will be closed at potential airborne radioactivity areas.

5.7.1.1.3 Laboratory Emissions

Emissions from laboratory areas will consist primarily of fumes and byproducts generated from analytical methods during testing. In order to control the gaseous emissions, lab fume hoods will be used in all necessary applications. Liquid byproducts will be disposed of in the deep disposal well.

5.7.1.2 Liquid Effluents

The liquid effluents from the Proposed Project facilities can be classified as follows:

5.7.1.2.1 Liquid Process Byproduct

The liquid byproduct material generated at the CPP will be primarily the production bleed which is routed to deep disposal wells for disposal. Other minor portions of liquid byproducts will be produced from liquid byproduct streams, plant wash down water, and bleed from other process circuits.

5.7.1.2.2 Groundwater Restoration

Following ISR operations, restoration of the affected aquifer commences, resulting in the production of wastewater. The current groundwater restoration plan consists of three activities:

1) Groundwater Transfer;
2) Groundwater Sweep; and
3) Groundwater Treatment.

Only groundwater sweep and groundwater treatment activities will generate wastewater. Flows from the groundwater sweep and treatment streams will be combined and will flow through the restoration IX columns. Upon exiting the IX columns, a portion of this combined stream will be used to feed the restoration RO units, while the remaining flow will be directed to the secondary set of RO units. Brine from the restoration RO units will also be added to the feed stream of the secondary RO units. All permeate generated by the restoration and secondary RO units will be injected into the wellfields undergoing groundwater treatment. All brine produced from the secondary RO units will be pumped to the DDWs.

AUC proposes to handle liquid 11e.(2) byproducts from the Proposed Project using deep well injection. Alternative liquid byproduct material disposal methods that were considered by AUC are discussed in Section 8.1.7.

5.7.1.3 Spill Contingency Plans

Administrative and engineering controls will be used as primary tools to prevent and mitigate any possible surface or sub-surface releases. However, AUC will develop and implement an emergency procedure and response plan in the event of equipment failures or spills. Spills can be characterized as two types, surface and sub-surface releases.

Surface Releases:

- Central Processing Plant Equipment - Potential failures in the CPP consist of leaks or ruptures in tanks or piping. These will be contained within the building using curbing around the building along with floors sloping toward a sump pit. For cases where contents inside a tank need to be contained alone with no possible chance of mixing with the surrounding materials, a berm will be installed to surround the tank. Such a secondary containment area will be equipped with a sump to transfer the contents to the desired location; and
- Surface Releases - These releases may occur from breaks, leaks, or separations in the above ground piping segments that transfer lixiviant to and from the central

processing plant and the production units. Engineering controls will be in place to alert the Plant Operators when the system detects a significant drop in pressure or flow. Due to these measures, the releases are expected to be small.

Sub-surface Releases:

- Piping Failure - These releases may occur from breaks, leaks, or separations in the below-ground piping segments which transfer lixiviant from the central processing plant and the production units. All pipelines will be pressure tested at operating pressures plus a safety factor prior to operation. All pipelines are monitored for changes in pressure and flow rates. These engineering controls detect changes outside established parameters and alert plant operators through system alarms. Because these sections are buried and will not see any additional stress, it is unlikely that a break will occur;
- Well Excursions - Production fluids are normally maintained in the Production Zone Aquifer within the immediate vicinity of the production units. The function of the monitor well ring will be to detect any production solutions that may migrate away from the production area due to fluid pressure imbalance. This system has been proven to function satisfactorily over many years of operating experience utilizing the ISR process. A ring of perimeter monitor wells located no further than 500 feet from the wellfield and screened in the ore-bearing Production Zone Aquifer will surround each production unit. Additionally, monitor wells will be placed in the first overlying aquifer for each wellfield. Sampling of these wells will be done at least twice monthly and at least 10 days apart. Past experience at other nearby ISR facilities including Christensen Ranch/Irigaray, Smith Ranch-Highland and Crow Butte Resources has shown that this monitoring system is effective in detecting lixiviant migration. The total effect of the close proximity of the monitor wells, the low flow rate from the well patterns, and over-production of recovery fluids (production bleed) makes the likelihood of an undetected excursion remote; and
- Preventing the migration of fluids to the overlying aquifer has also been considered. AUC will utilize several engineering controls to help inhibit this communication. AUC will plug open exploration holes identified during the production unit pump tests. In addition, each production well will be mechanically integrity tested prior to being placed in service. This requirement of the WDEQ UIC Program ensures all wells will be constructed properly and be capable of maintaining pressure without leakage. Finally, monitor wells in the overlying aquifer will be sampled on a regular basis to detect the presence of excursions.

Potential releases of pollutants can also occur from accumulation of sediment or erosion of existing soils. To minimize the effects of this AUC will establish plant cover for erosion control as soon as possible after areas are exposed.

The RSO will be charged with the responsibility to develop and oversee implementation of appropriate procedures to address spills of byproduct material. Personnel representing the engineering and operations functions will assist the RSO in this effort. Basic responsibilities of CPP management and the RSO in this regard will include:

- Identification of potential spill sources including lessons learned from review of past incidents of spills;
- Assignment of resources and manpower;
- Responsibility for materials management and inventory;
- Establishment of spill reporting procedures and visual inspection programs;
- Establishment of employee emergency response training programs; and
- Responsibility for program implementation and subsequent review and updating.

Review of new construction and process changes that may require updating of spill prevention and control programs.

5.7.2 External Radiation Exposure Monitoring Program

This section describes AUC's approach for assessing the external exposure of personnel working at the Proposed Project. The approach includes general area surveys with hand held instrumentation. Fixed location dosimeters [thermo-luminescent or optically stimulated (TLD/OSD)], exchanged quarterly, will track radiological conditions in plant areas. TLDs/OSDs will be assigned to potentially exposed personnel to monitor individual exposures. Figure 5-2 displays the plant general arrangement; fixed dosimeter locations within the facility will be identified once final facility designs have been prepared. These locations will include monitors where relatively high exposures rates are anticipated, and other areas such as offices, change rooms and lunchrooms. Table 5-1 displays the list of radiation detectors.

5.7.2.1 Gamma Surveys

Process area gamma surveys using handheld detectors will be performed at least monthly, allowing identification of changed conditions to maintain ALARA exposure rates. All radiation surveys will be performed by an RST Comprehensive surveys will be conducted more often as production ramps up, to verify exposure rate estimates. Survey locations and frequencies will be adjusted when process conditions change.

As examples, radiation surveys will initially and routinely be performed at worker occupied process areas where ^{226}Ra may concentrate or precipitate and in areas where uranium concentrates are processed or stored. These areas will include the interior of wellfield header houses where precipitates from dried leaks could develop, loaded ion exchange and elution tanks, resin transfer systems, RO units, the yellowcake precipitation area, thickening, drying/packaging and storage areas, and other areas where radioactive material is accumulated or stored. Since elevated gamma levels can be an indication of surface contamination, such areas will also routinely be assessed for surface contamination.

Designated "Radiation Areas" will be posted, and are defined as areas with external radiation levels where an employee could receive an exposure greater than five millirems (0.05 millisievert) in one hour at 30 centimeters. These circumstances are considered unlikely at an ISR operation, except in areas where concentrations of ^{226}Ra precipitates accumulate and/or large quantities of final product concentrate is stored awaiting shipment (these will be controlled areas with limited personnel access). Should such exposure rates be encountered, an evaluation will be performed to determine the cause and whether opportunities exist to reduce exposure levels ALARA. In these circumstances, survey frequencies may need to be increased, sources (e.g., drums in storage) may need to be repositioned and/or stay times reduced, based on results of the ALARA analyses. Ad-hoc surveys will be performed during maintenance of systems which may contain concentrations of ^{226}Ra precipitates (e.g., during tank clean-outs.)

Gamma radiation surveys will be performed using gamma survey equipment such as the Ludlum Model 44-10, 2” NaI-based detector or similar, coupled to an appropriate ratemeter or datalogger such as the Ludlum Model 3 or Model 2350-1. These systems provide adequate sensitivity and range for routine gamma surveys at an ISR facility.

Surveys will be performed in accordance with the guidance contained in NRC Regulatory Guide 8.30 and will be documented in accordance with Regulatory Guide 8.7. All corrective actions will be consistent with regulatory requirements noted within 10 CFR Part 20.

5.7.2.2 Beta Surveys

AUC will perform beta surveys to determine the need for protective clothing for operations that involve direct handling of large quantities of aged yellowcake. Surveys will include drying and packaging areas, and areas where radionuclide build-up may occur including filter press and precipitation areas. These surveys will help to determine whether procedures should be modified to minimize potential beta dose.. In accordance with NRC Regulatory Guide 8.30, Section 2.4, AUC will conduct beta radiation surveys

upon initiation of a specific process sequence, and will re-survey a process area when sequence equipment is updated or modified

Beta dose rate from yellowcake aged for a few months after chemical separation from the ore increases due to ingrowth of ^{234}Pa and ^{234}Th. Beta dose rate from yellowcake immediately after separation from ore is negligible. To minimize potential exposure, AUC will ship yellowcake as often as is economically feasible.

Beta radiation surveys will be performed with handheld survey instruments such as the Ludlum Model 44-6 sidewall GM detector, the Ludlum Model 43-9 pancake GM detector, or equivalent, coupled to an appropriate scaler/ratemeter. These instruments provide adequate sensitivity for use in an ISR environment. If it is determined that beta exposure rates to which workers could be exposed could result in shallow dose equivalents to the skin or the skin of extremities greater than 10 percent of applicable 10 CFR §20.1201(a)(2) limits, provisions for additional beta monitoring (e.g., ring and/or wrist dosimetry) will be initiated.

As discussed in Regulatory Guide 8.30, beta exposure potential evaluations may be substituted for beta instrument-based surveys. Such evaluations are based on data provided in the Regulatory Guide. The evaluations utilize curves presenting the beta dose rate increase over time associated with ingrowth of ^{234}Pa and ^{234}Th, and the decrease of beta dose with distance. AUC will use this approach, combined with beta radiation surveys, to estimate and control beta dose during operations.

5.7.2.3 Personnel Dosimetry

As specified in Regulatory Guide 8.34, all workers likely to receive in one year an intake in excess of 10 percent of the applicable ALIs for ingestion and inhalation will require exposure monitoring. AUC will determine monitoring requirements in accordance with this guidance.

Based on operating experience at similar facilities, it is not anticipated that process plant employees will exceed the 10 percent regulatory limit. However, to minimize the potential for error, AUC will provide dosimetry badges to all employees with significant potential for exposure. Dosimeters will have a lower limit of detection of 1 mrem and an upper limit of 1,000 rem (R). In accordance with 10 CFR §20.1501, dosimeters will be accredited from the National Voluntary Laboratory Accreditation Program (NVLAP) of the National Institute of Standards and Technology, and will be exchanged on a quarterly basis .

Results from personnel dosimetry will provide the individual Deep Dose Equivalent (DDE) for use in determining Total Effective Dose Equivalent (TEDE). The TEDE is

defined in Regulatory Guide 8.30 as the sum of the DDE and the committed effective dose equivalent (CEDE) for internal exposures. Determination of the CEDE is discussed in Section 5.7.4 of this TR.

5.7.3 In-Plant Airborne Radiation Monitoring Program

5.7.3.1 Airborne Uranium Particulate Monitoring

Due to the nature of the ISR process and the design of the drying system, the primary source for airborne uranium particulates will occur during packaging operations. These operations will be confined to the enclosed drying room which will be under negative pressure during operation. The room will have signs posted, allowing entry by authorized personnel only. Airborne particulate sampling locations for the CPP are shown on TR Figure 5-2. Samples will be analyzed on a monthly frequency. For airborne radioactivity areas as defined in 10 CFR § 20.1003, samples will be analyzed on a weekly frequency, if workers are potentially exposed.

As noted in Regulatory Guide 8.37 (Section C.3.1), effluent monitoring systems should be designed in accordance with ANSI N13.1 (1969), *"Guide to Sampling Airborne Radioactive Materials in Nuclear Facilities"* and ANSI N42.18, *"Specification and Performance of On-site Instrumentation for Continuously Monitoring Radioactive Effluents."* AUC commits to such guidance.

Area samples will be taken in accordance with NRC Regulatory Guide 8.25. Samples will be taken with a glass fiber filter and a regulated air sampler such as an Eberline RAS-1 or equivalent. Sample volume will be adequate to achieve the lower limits of detection (LLD) for uranium in air (e.g., less than or equal to 10 percent of the Derived Air Concentration (DAC)). Samplers will be calibrated in accordance with the Regulatory Guide methods at the manufacturer's suggested interval (at least annually), and after repair. .

Breathing zone sampling will be performed to determine individual exposure to airborne uranium during certain operations. Sampling will be performed with a lapel sampler or equivalent. The air filters will be analyzed and compared to the DAC using the same method used for area sampling. Air samplers will be calibrated at the manufacturer's recommended frequency or at least annually, and after repair..

To estimate radionuclide air concentrations, the initial air particulate samples obtained following plant startup will be composited according to the sampler location as shown on TR Figure 5-2. These sample locations are selected to characterize various locations in the process (e.g., lixiviant, precipitation, and drying/packaging areas). Samples will be

submitted to a contract laboratory for radioisotope analysis. Samples will be analyzed for natural uranium, ^{230}Th, and ^{226}Ra. AUC will compare analysis results using the sum of fractions rule to ensure the use of the appropriate DACs from 10 CFR 20 Appendix B Table 1. Because ^{230}Th will not be solubilized in the recovery solutions and therefore will not be available for dispersion in the CPP, during the time period between initial plant startup and receipt of the analytical results for these samples, AUC will apply the DAC for U-Nat or ^{226}Ra to the initial, onsite gross alpha counting results. The DAC for both natural uranium and ^{226}Ra is 3 x 10^{-10} μCi/ml for solubility Class W, the solubility class to be assumed initially (Table 5-2).

Assuming that the laboratory results of the initial radioisotopic analysis confirm that U-Nat is the primary radionuclide of concern in the air particulate samples and that other uranium decay products may be disregarded [as discussed in 10 CFR §20.1204(g)], measurement of airborne uranium will be performed by gross alpha counting of the air filters using an alpha particle detector system such as the Ludlum Model 43-1 or similar, coupled to an appropriate scaler. This instrument provides adequate sensitivity for use in an ISR environment. The DAC for moderately soluble (W class) U-Nat (3x10^{-10} μCi/ml) from Appendix B 10 CFR §20.1001 - §20.2401 will initially be used at the Proposed Project unless in vitro solubility studies are determined prior to initial operations to be necessary. This is a conservative approach: the available literature (see the following paragraph) indicates that wet process UO_4 and dried UO_3 products of modern ISRs in general will be ICRP 19 Class D (or ICRP 66 Class F) compounds. It is also of note that ICRP 54, "Individual Monitoring for Intakes of Radionuclides by Workers", which assigns Class W to UO_3, indicates "…there is evidence from animal studies that industrial uranium trioxide may behave more like a class D material." Nonetheless, AUC will assume Class W (or ICRP 66 Class M) for purposes of establishing the initial DAC upon plant startup. Should in vitro solubility studies indicate that Class D or a "mixed" DAC (i.e., a combination of the Class D and Class W DACs) is appropriate, the DAC will be adjusted accordingly using the sum of fractions rule. This change will be effected by the AUC SERP after in-plant monitoring has determined whether the change is necessary. An action level of 25 percent of the DAC for natural uranium will be established at the Proposed Project CPP. If an airborne uranium sample exceeds the action level, the RSO will investigate the cause and develop corrective action.

Although specific studies and references on solubility (e.g., in vitro solubility studies in simulated lung fluids, historical animal studies, etc.) for UO_4 are sparse (specific references are provided below), numerous references appear in the literature over 30+ years regarding the solubility characteristics of industrial uranium compounds (a representative list is provided below). The UO_4 and UO_3 products will be ICRP 19 class D or W (most or moderately soluble) (ICRP 1972a, ICRP 1972b), which is equivalent to ICRP Publication 66 and 71 Type F or M (fast or medium dissolution) (ICRP 1994a, ICRP 1995). Additional evidence is presented in ICRP Publication 19 (ICRP 1972a),

ICRP 30 (ICRP 1972b), and ICRP 66 (ICRP 1994a). The issue of assumed solubility class is critical in establishing the appropriate DAC for defining air-monitoring parameters for worker airborne exposure control and dose assessment.

The following references provide support for a Class D or W designation for UO_4:

- Regulatory Guide 8.30 (NRC 2002b) calls out UO_4 specifically: "Yellowcake dried at low temperature, which is predominantly composed of ammonium diuranate, or in the new processes uranyl peroxide, both are more soluble in body fluids than yellowcake dried at higher temperature and a relatively large fraction is rapidly transferred to kidney tissues" (see Section 5.7.5 of this TR, Bioassay, for additional discussion on anticipated solubility of the project's uranium products);
- Kathren and Burklin state "...the more soluble compounds of uranium such as.... and UO_4 are more quickly absorbed into the blood and therefore exhibit toxic effects in moderate doses" (Kathren and Burklin 2008);
- Results in Metzger et al. (1997) indicated airborne in wet process area = 97 percent with dissolution Tip = 0.3 day; airborne U in drum load out area = 97 percent with dissolution T112 = 0.25 day. NRC staff makes reference to this study in context of a "split DAC." However, the results of this study indicated airborne U in both the wet process and drum load out areas of 97 percent dissolution with half times less than 0.5 day. These results are clearly indicative of a Task group on Lung Dynamics (TGLD) Class D or ICRP 66 Class F compound. Many of the historical studies on yellowcake solubility present results suggesting "di" (2) or "tri" (3) phased dissolution patterns indicative of mixtures of uranium compounds of differing solubility classes (U_3O_8 plus UO_3, e.g.). However, based on reported results, the study referenced here is clearly a single-phase dissolution pattern, i.e. single solubility class, single DAC and it is Class D. (Since the secondary "W" component is reported at only three percent, use of the less than 10 percent exclusion rule similar to that allowable for mixtures of radionuclides in air at 10 CFR 20.1204(g) would seem to be appropriate);
- ICRP Publication 78 (ICRP 1997) defines UO_3 and UO_4 as "less soluble compounds" with an inhalation Type M classification. While this is the most recent ICRP document that provides a solubility class for UO_3 and UO_4 it is important to note the following statement made in the document: "For the purposes of this report, compounds for which clearance was given as Classes D, W, or Y in the Publication 30 system, are assigned to absorption Types F, M, and S respectively.";
- National Radiation Protection Board (NRPB) W22 (NRPB 2002) provides a summary of solubility information from several United Kingdom and French sources on various uranium compounds. The results indicate both UO_3 and UO_4 should be assigned absorption type F ("equivalent" to ICRP 19/30 solubility class

D) per ICRP 71 criteria. This NRPB document of the United Kingdom was funded in part by the European commission to examine and question current standards for "monitoring occupational intakes of natural uranium compounds encountered in the nuclear fuel cycle."; and

- Tairova et al. (2010) presents the results of dissolution studies in simulated lung fluid for uranium products from Cameco facilities including the Crow Butte and Smith Ranch ISR facilities. Both plants' ISR products were determined to be very soluble. All ISR samples from these plants appeared to exhibit solubility characteristics that meet the definition of Type F, per in ICRP 71. ICRP 71 considers Type F as "generally equivalent" to solubility Class D from the older ICRP 19/30. ICRP 19/30 is the basis of 10 CFR 20 dosimetry (Uranium Derived Air Concentrations {DACs} and Annual Limits on Intake {ALIs} in 10 CFR 20, Appendix B, Table 1).

Therefore, based on studies from the literature, particularly the results of solubility studies for ISR products (Irigaray, Crow Butte and Smith Ranch), modern ISR products are highly soluble and should be considered ICRP 19/30 solubility Class D (equivalent to ICRP 66/71 absorption Type F). This is expected, given the peroxide precipitation process and low temperature drying typical in modern ISRs producing UO_3 and UO_4 that retain water of hydration due to the low temperature of modern vacuum dryers. However, at startup, AUC will consider the Proposed Project ISR product ICRP 19/30 solubility Class W until its molecular composition has been characterized to demonstrate similarities with the other ISR products for which definitive solubility data has been reported (see Metzger et al. 1997 and Tairova et al. 2010)

Instruments utilized in determining the gross alpha count for air filters will be properly calibrated at least annually and after repair, and checked for function and efficiency in accordance with the applicable SOP prior to each daily use, to ensure proper operation.
The results of airborne particulate monitoring and analysis will be used in the determination of CEDE as discussed in Section 5.7.4 of this TR.

Instrument and laboratory LLDs will be established to ensure the ability to detect less than 10 percent of the applicable DAC. For U-Nat in air, initially assuming solubility class W (M), the LLD will be required to be less than $3E^{-11}$ µCi/ml. The following equipment will be used to obtain air samples.

- High volume air sampler (15 to 30 ft^3 per minute [cfm]) such as a Hi-Q HV, Staplex HV or equivalent;
- Hi-Q low volume sampler (0 to 100 liters per minute [lpm]) or equivalent; and
- Breathing zone (lapel) samplers (0 to 5 lpm) such as a GilAir5 or equivalent.

For U-nat in air, the volume of air sampled and air filter counting times will be established to ensure achievement of this LLD, in accordance with the applicable SOP.

5.7.3.2 Radon Progeny Concentration Monitoring

As specified in NRC Regulatory Guide 8.30, ^{222}Rn progeny concentrations will be measured on a quarterly basis at the locations shown on Figure 5-2. If the ^{222}Rn progeny concentration at a given location exceeds ten percent of the DAC (greater than 0.03 Working Levels [WL]), monitoring will be done on a monthly basis and the RSO will initiate a review to identify possible corrective actions. Radon progeny concentrations exceeding 25 percent of the DAC (greater than 0.08 WL) for a location will prompt weekly monitoring until measured levels drop below 0.08 WL for four consecutive weeks. For areas that exceed the 0.08 WL, the RSO will investigate causes and will take appropriate corrective action(s).

Air particulate samples will be collected using a low volume air pump (e.g., lapel sampler), and analyzed using the Modified Kusnetz method described in NRC Regulatory Guide 8.30, Appendix B, in accordance with the applicable SOP. Air samplers will be calibrated in accordance with the manufacturer's recommendations or at least annually, and after repair.

The LLD for ^{222}Rn progeny measurements will be 0.03 WL. All measured values will be recorded including values less than the LLD. AUC will use this information to calculate area working levels as described in Appendix B of NRC Regulatory Guide 8.30. Instruments such as the Ludlum Model 43-1 with appropriate scaler, utilized to support Kuznetz analyses, will be function and efficiency checked prior to daily use, in accordance with the appropriate SOP.

The results of ^{222}Rn progeny concentration monitoring will be used during determination of CEDEs as discussed in Section 5.7.4.

5.7.3.3 Respiratory Protection Program

Process and engineering controls will be the primary means of control of airborne radioactive material. In cases where significant potential exposure exists and all feasible process and engineering controls have been evaluated, AUC will utilize respiratory protective equipment under a fully qualified program in accordance with 10 CFR §20.1703, NRC Regulatory Guide 8.15, and NRC Regulatory Guide 8.31. The program will be implemented under applicable SOPs, and will include appropriate training and equipment/personnel testing and maintenance programs.

5.7.4 Exposure Calculations

Employee exposure to radiation will be monitored and recorded in accordance with 10 CFR §20.1502 and §20.1201, and Regulatory Guides 8.30 and 8.34. Routine employee exposures will be determined and recorded for those employees with the potential to receive more than 10 percent of the allowable occupational dose limit (i.e., 0.5 rem). During initial operation of the Proposed Project, all workers potentially exposed to significant external radiation or radioactive materials will be monitored for external and internal exposure. Once an adequate exposure history is established, AUC may discontinue monitoring for worker classifications that have been shown to have no likelihood of exceeding 10 percent of the allowable occupational dose limit. External exposures will be determined using personnel dosimetry as discussed in Section 5.7.2.3. Internal exposures will be determined and recorded for internal exposure from ^{222}Rn daughters, uranium and other radionuclides as appropriate.

Following is a discussion of the exposure determination methods and documentation of results.

5.7.4.1 Natural Uranium Internal Exposure

Exposure calculations for airborne natural uranium will be performed using the intake method from NRC Regulatory Guide 8.30 (June, 1983), Section 2. The intake is calculated using the following equation:

$$I_u = b\sum_{i=1}^{n}\frac{X_i \times t_i}{PF}$$

Where:

I_u = *uranium intake, μg or μCi*

t_i = *time that the worker is exposed to concentrations* X_i *(hr)*

X_i = *average concentration of uranium in breathing zone,* $\mu g/m^3$, $\mu Ci/m^3$

b = *breathing rate, 1.2* m^3/hr

PF = *the respirator protection factor, if applicable*

n = *the number of exposure periods during the week or quarter*

The intake for uranium will be calculated and recorded. The intakes will be totaled and entered onto each employee's Occupational Exposure Record.

Intake of soluble uranium by an individual shall not exceed 10 mg per week, in consideration of chemical toxicity per 10 CFR 20.1201(e). Accordingly, at a specific activity of 0.67 µCi/gram for U-nat(10 CFR 20, Appendix B, footnote 3), the weekly soluble intake limit is $6.7E^{-3}$ µCi. As discussed, initially solubility Class W will be used to establish an ALI of 0.8 µCi and a DAC of $3.0E^{-10}$ µCi/ml for natural uranium (10 CFR 20, App B, Table 1). Assuming a 40 hour work week and average breathing rate of 20 liters/min, the average concentration at the soluble weekly intake limit is approximately equal to 50 percent of the DAC. Compliance to this requirement will be documented by recording of worker airborne exposure in DAC–hours whenever long lived particulate concentrations in air are determined to be greater than or equal to 10 percent of the DAC and an action level of 25 percent of the DAC will be established, requiring RSO investigation and potential corrective actions. Assignments of positive airborne exposures will be reviewed by the RSO or qualified RST weekly. Any exposures to soluble uranium greater than five percent of the 10 mg/week limit will be recorded (as DAC–hrs). Controlling exposure to 25 percent of DAC ensures that the 10 mg/week limit is not exceeded.

The data required to calculate internal exposure to airborne U-nat will also include the following:

5.7.4.1.1 Time of Exposure Determination

In general, 100 percent occupancy time will be initially used to determine exposures. Using this method to determine time of exposure, each worker is assumed to have spent their entire work shift in the survey area(s). The occupancy time determinations for each worker will be based on the actual time worked during the monitoring period. This approach generally results in a conservative (i.e., higher than actual) estimate of internal exposure to airborne natural uranium as it does not account for time the worker may have spent outside the work area, such as during breaks and meals.

The RSO may perform a time study to determine the average time of exposure for each classification of worker. Under this approach, the RSO will have a representative population of each classification of worker track their time spent in different areas of the facility. The time study will be performed for an extended period (usually one month) and will provide the RSO with a percentage of time spent in each area for each classification of worker. If time studies are employed to determine time of exposure, they will be updated annually to account for any changes. Exposures during non-routine work (i.e., work requiring an RWP) will be based upon actual time.

5.7.4.1.2 Airborne Uranium Activity Determination

Airborne uranium activity will be determined from surveys performed as described in Section 5.7.3.1.

Exposures to airborne uranium will initially be compared to the DAC for the "W" solubility class for U-nat from Appendix B of 10 CFR §20.1001 - §20.2401 (i.e., $3x10^{-10}$ μCi/ml). As noted previously, AUC may perform in vitro solubility studies on the uranium compounds present after facility startup, to determine the solubility class of the material present.

5.7.4.2 Radon Progeny Internal Exposure

Exposure calculations for airborne ^{222}Rn progeny will be performed using the intake method from NRC Regulatory Guide 8.30 (June, 1983), Section 2. The ^{222}Rn progeny intake will be calculated using the following equation:

$$I_r = \frac{1}{170} \sum_{i=1}^{n} \frac{W_i \times t_i}{PF}$$

Where:

I_r	=	*radon* progeny *intake, working-level months*
t_i	=	*time that the worker is exposed to concentrations W_i (hr)*
W_i	=	*average number of working levels in the air near the worker's breathing zone during the time (t_i)*
170	=	*number of hours in a working month*
PF	=	*the respirator protection factor, if applicable*
n	=	*the number of exposure periods during the year*

5.7.4.2.1 Time of Exposure Determination

In general, 100 percent occupancy time will be used to determine exposures. Using this method to determine time of exposure, each worker is assumed to have spent their entire work shift in the survey area(s). The occupancy time determinations for each worker will be based on the actual time worked during the monitoring period. This approach generally results in a conservative (i.e., higher than actual) estimate of internal exposure to ^{222}Rn progeny because it does not account for time the worker may have spent outside the work area, such as during breaks and meals.

Alternatively, the RSO may perform a time study to determine the average time of exposure for each classification of worker. Under this approach, the RSO will have a representative population of each classification of worker track their time spent in different areas of the facility. The time study will be performed for an extended period (usually one month) and will provide the RSO with a percentage of time spent in each area for each classification of worker. If time studies are employed to determine time of exposure, they will be updated annually to account for any changes.

5.7.4.2.2 Radon Progeny Concentration Determination

Radon progeny concentrations will be determined from surveys performed as described in Section 5.7.3.2. All information will be recorded and kept on file for each employee.

5.7.4.3 External Exposure

Occupational exposure to external gamma and beta radiation will be measured using personnel dosimeters as discussed previously. Consistent with 10 CFR §20.1502 and Regulatory Guide 8.34, occupational exposure to external radiation will be used to determine the DDE for employees whose work locations or functions may be expected to exceed 10 percent of the occupational exposure limits. During initial operation of the Proposed Project facility, all workers will be monitored for external exposure. Once an adequate exposure history is established, AUC may discontinue monitoring for worker classifications that have been shown to have no likelihood of exceeding 10 percent of the allowable occupational dose limit. The RSO will use historical and current monitoring and survey data to ensure that external radiation exposures are less than 10 percent of the occupational dose limit for all unmonitored workers.

For uranium intakes:

$$CEDE_U = (I_U * 5000)/ALI$$

Where:

$CEDE_U$	=	*Committed effective dose equivalent in mRem from uranium*
I_U	=	*Uranium intake in µC*
5000	=	*Radiation dose in mrem from the intake of 1 ALI*
ALI	=	*Annual limit of intake for uranium presented in 10 CFR 20, Appendix B, Table 2 (assume class W solubility for U-nat DAC/ALI until operational data verify class D)*

For ^{222}Rn and progeny intakes:

$$CEDE_r = (4)\ (5000)\ /ALI$$

Where:

$CEDE_r$	=	*Committed effective dose equivalent in mrem from ^{222}Rn and progeny*
I_r	=	*Radon intake in working level months*
5000	=	*Radiation dose in mrem from the intake of 1ALI, 5000 mrem assumed equivalent to 4 WLM/ yr*
ALI	=	*Annual limit of intake* for ^{222}Rn and ^{222}Rn *progeny in WLM*

For external exposure:

The external whole body radiation dose is measured with TLDs or OSLs (see Section 5.7.2 of this TR) reported and recorded as mrem/year.

The total radiation dose is the sum of the internal and external radiation doses:

$$TEDE = CEDE_u + CEDE_r + DDE$$

Where:

TEDE	=	*Total effective dose equivalent in mrem = total radiation dose*
$CEDE_u$	=	*Committed effective dose equivalent in mrem from uranium*
$CEDE_r$	=	*Committed effective dose equivalent in mrem from ^{222}Rn and progeny*
DDE	=	*The external deep dose equivalent*

5.7.4.4 Prenatal and Fetal Exposure

In accordance with 10 CFR §20.1208, AUC will ensure that the occupational dose equivalent to the embryo/fetus of a declared pregnant female during the entire pregnancy will not exceed 0.5 rem.

The dose equivalent to the embryo/fetus is determined by monitoring the declared pregnant woman. The declared pregnant woman will be monitored in accordance with 10 CFR §20.1502. This regulation requires monitoring the exposure when the deep dose equivalent is likely to exceed 0.1 rem during the entire pregnancy. In addition, 10 CFR 20.1502 requires that the licensee monitor the occupational intakes of radioactive material for the declared pregnant woman if her intake is likely to exceed a committed effective dose equivalent of 0.1 rem during the entire pregnancy.

Prior to a declaration of pregnancy, the woman may not have been subject to monitoring based on the conditions specified in 10 CFR §20.1502. In this case, AUC will estimate the pre-declaration dose using a combination of radiation survey data, air monitoring data, and bioassay results. Exposure calculations will be performed as recommended in NRC Regulatory Guide 8.36:

- *External Dose to the Embryo/Fetus*

  The deep-dose equivalent to the declared pregnant woman during the gestation period will be taken as the external dose for the embryo/fetus. The determination of external dose will consider all occupational exposures of the declared pregnant woman since the estimated date of conception and will be based on the methods discussed in Section 5.7.2.
- *Internal Dose to the Embryo/Fetus*

  The internal dose to the embryo/fetus will consider the exposure to the embryo/fetus from radionuclides in the declared pregnant woman and in the embryo/fetus. The dose to the embryo/fetus will include the contribution from any radionuclides in the declared pregnant woman (body burden) from occupational intakes occurring prior to conception. The intake for the declared pregnant woman will be determined as discussed in Sections 5.7.3.1 and 5.7.3.2.

5.7.4.5 Exposure Recording and Reporting

All dose records will be kept and reported in accordance with RC Regulatory Guide 8.7 and 10 CFR 20.2103. Records of prior dose history and exposure monitoring results will be maintained as required for each monitored individual on an NRC Form 5 or equivalent.

In accordance with 10 CFR §19.13(b), monitored employees will be advised in writing on an annual basis of their calculated TEDE. Additionally, any employee may request a written report of their exposure history at any time. These reports will be provided within 30 days of the request and will provide the information outlined in 10 CFR §19.13.

In accordance with 10 CFR §20.2205, if AUC is required to report to the NRC any exposure of an identified occupationally exposed individual or an identified member of the public to radiation or radioactive material under 10 CFR §20.2203 (Reports of exposures, radiation levels, and concentrations of radioactive material exceeding the constraints or limits) or 10 CFR §20.2204 (Reports of planned special exposures), AUC will also provide the employee(s) or identified member(s) of the public with a report of his or her exposure no later than the time that the report is submitted to the NRC.

5.7.5 Bioassay Program

AUC will implement a urinalysis bioassay program consistent with applicable sections of NRC Regulatory Guide 8.22 and NRC Regulatory Guide 8.31 including ALARA requirements. The primary purpose of the program will be to detect uranium intake in employees who are potentially exposed to airborne uranium and to confirm the results of the airborne uranium particulate monitoring program (discussed in Section 5.7.3.1) and the internal exposure determination (discussed in Section 5.7.4.1). Determination of which workers to be monitored will be in accordance with Regulatory Guide 8.22, Section 2, including the sampling and analysis frequencies for new and terminated employees consistent with Section 4 of the Regulatory Guide. In general bioassay results will be collected monthly for those who are involved with the uranium extraction process from the ion exchange process to the final packaging. Any employees who perform routine maintenance on filtration equipment will also be tested monthly.

A quality control program for bioassay measurements will be incorporated into the Proposed Project Bioassay program, consistent with the guidelines contained in NRC Regulatory Guide 8.22. Each batch of specimens sent to the laboratory will be accompanied by at least two control specimens. Control specimens will be from persons who have not been occupationally exposed to uranium. Specimens must also meet the following requirements:

- Control specimens will be spiked to a uranium concentration of 10 to 20 μg/l and 40 to 60 μg/l. Alternatively, synthetic control samples may be used. The results of analysis for these samples are required to be within ± 30 percent of the spiked value; and
- In order to provide adequate quality control within the analytical laboratory, the analytical laboratory should duplicate the analysis of 10 to 20 percent of all samples received, including the blanks and spikes received from AUC. Results will be reported to AUC.

In the event that a bioassay result is above a specified action level in Table 1 of Regulatory Guide 8.22, corrective actions will be in accordance with Table 1. All recording and reporting will be done in accordance with the requirements of 10 CFR Part 20, subparts L and M.

5.7.6 Contamination Control Program

Contamination surveys will be conducted at the Proposed Project to ensure exposure of workers is maintained ALARA and to minimize potential for release of radioactive material to unrestricted (public access) areas. This section describes policies and methods that will be applied for the conduct of contamination surveys in restricted areas (process

areas as well as general plant areas), for assessment of contamination of skin and clothing of workers, and for the release of equipment to unrestricted areas. Contamination assessments will also be conducted in unrestricted areas to ensure program effectiveness. The contamination control program and action levels described in this section are based on the guidelines contained in NRC Regulatory Guide 8.30, (NRC 2002b).

5.7.6.1 Surveys for Surface Contamination in Restricted (Plant) Areas

Surveys will be conducted for surface contamination throughout all plant areas on at least a weekly basis. Surveys will be conducted using hand held instrumentation (e.g., portable rate meters with pancake type GM or large area scintillation detectors) to assess surface contamination, and smear surveys of surfaces to assess removable contamination, as described in following sections of this TR. Figure 5-2 depicts typical surface contamination sampling locations at which both hand held instrument surveys and swipe (smear) tests will be performed. These surveys will be conducted in accordance with the applicable SOP.

5.7.6.1.1 Process Area

In the ion exchange and elution areas, uranium and progeny concentrations in solutions are low and there is minimal potential for dust, and therefore little expectation of significant surface contamination. In the precipitation circuit, dewatering, and the yellowcake drying and packaging areas, surface contamination can occur because of the concentrated nature of the yellowcake. The International Atomic Energy Agency (IAEA 1976) recommends a limit for alpha contamination on such areas as walls, floors and benches of 10^{-3} liCi/cm^2 (220,000 dpm/ 100 cm^2), which is equivalent to about two mg/cm^2 of U-nat. Based on experience, the IAEA has concluded that if surface contamination levels are kept below this value, the contribution to airborne radioactivity from surface contamination will be well below applicable limits. NRC Regulatory Guide 8.30 considers surface contamination levels in process areas of less than 10^{-3} liCi/cm^2 acceptable to meet the ALARA concept in uranium recovery facilities, since these levels are low enough to ensure little contribution to airborne radioactivity, yet are practicable to achieve. This amount of yellowcake surface contamination is typically visible. Accordingly, whenever yellowcake is visible on surfaces outside of intended process vessels, it will be cleaned up as soon as possible.

In yellowcake areas, daily visual inspections will be made by the RSO or RST (see Section 5.3.1) for locating yellowcake contamination on surfaces. Visible yellowcake will be cleaned up promptly, especially where contamination could be disturbed and re-suspended from walkways, railings, other high traffic areas, tools and similar surfaces.

Objectives will be that trained radiation workers will clean up spills before the yellowcake dries so that re-suspension during cleanup will be minimized.

5.7.6.1.2 General Plant and Unrestricted Areas

In areas where work with uranium is not performed, such as eating rooms, change rooms, control rooms and offices, a lower level of surface contamination is possible. These areas will be spot-checked weekly by the RSO or RST for removable surface contamination using filter paper smear tests. The areas will be immediately cleaned by trained radiation workers if surface contamination levels exceed the values of NRC Regulatory Guide 8.30, Table 2. However, to help maintain doses ALARA any detectable activity above background in these areas will be cleaned and removed as soon as possible.

5.7.6.1.3 Special Surveys during Maintenance Activities

When maintenance is performed on systems and/or components that may result in exposure to and/or contact with internal surfaces of pipes, drain lines, duct work, etc., special contamination surveys will be conducted as specified in SOPs and RWPs. Whenever maintenance work needs to be performed and radiation safety controls specific for the work are not addressed in standing SOPs, an RWP will need to be prepared and approved prior to initiation of the job as described in Section 5.2.2. RWPs will specify additional survey, personal protective equipment, documentation and related requirements to ensure the work can be performed safely and in accordance with ALARA principles.

5.7.6.2 ***Surveying Skin and Personal Clothing***

AUC will designate and post the plant processing area as restricted and limit access to only those individuals who have received appropriate training and/or are escorted by an experienced employee. All entrances/exits to restricted areas will display signage that will read, "ANY AREA WITHIN THIS FACILITY MAY CONTAIN RADIOACTIVE MATERIAL." Before leaving the restricted area, all individuals must perform and document an alpha survey. Individuals who have been in the wellfields, byproduct storage area, near the deep disposal well or backup pond will perform and document an alpha survey immediately upon returning to the plant before entering office areas, before eating, or before leaving the Proposed Project facility site. The personnel monitoring system will consist of a Ludlum Model 43 series alpha detector (Background three cpm; efficiency 17-35 percent rated for ^{239}Pu) coupled to a Model 177 alarming rate meter or equivalent. The alarm will be set by the RSO after determining the efficiency of the system so that contamination above the limit will be detected. A typical alarm setting for this type of equipment is 20 cpm. The goal is to ensure no personal contamination

significantly above background levels. All workers shall receive training regarding how to properly perform and document alpha surveys. The RSO or RST shall post by each alpha survey meter the written instructions for use of the system and the allowable limits in cpm.

All exit doors without a permanent or temporary scanning station will be designated and labeled as emergency exits only. A temporary scanning station may be set up for a limited period using an alpha detector/meter system approved by the RSO. Unannounced quarterly spot surveys of personnel will be performed by the RSO or RST as recommended by NRC Regulatory Guide 8.30, Section 2.6. The spot surveys will take place in a non-restricted area and will include personnel who work in wellfield and process areas. Spot checks will encourage employees to perform self-surveys before leaving the restricted areas.

5.7.6.2.1 Response to Identification of Personnel Contamination in Excess of Background

Upon determination by any employee that contamination on his/her person, clothing or other personal effects exceeds background, the affected area(s) will be washed with water and soap and resurveyed. A second washing using modest abrasive methods may be required (soft brush or cloth). If the contamination remains above background, the RSO or RST will be contacted. More aggressive methods, e.g., use of detergents may be used, but abrasion of the skin should be avoided. If the ALARA objective of background cannot be achieved without more extensive and potentially abrasive methods, the methods and release limits specified in Regulatory Guide 8.30, Section 2.6 will be used and all detected activity will be assumed to be removable. If these limits cannot be achieved without abrasion of the skin or other potentially harmful impact to the employee, the RSO may need to refer the employee for medical intervention.

Since any beta-gamma contamination at an ISR (or uranium mill) should be associated with alpha emitting nuclides, no special monitoring or survey for beta-gamma emitters are required. The lack of detectable alpha contamination assures no beta-gamma contamination. For example, the immediate short-lived beta-gamma emitting progeny ^{234}Pa and ^{234}Th take approximately four months to reach equilibrium and little will be associated with fresh product. The fact that the radionuclide composition of material in an ISR plant would be almost exclusively natural uranium and/or ^{226}Ra is discussed in Section 5.7.3.1 of this TR. The very small amount of in growth of other progeny during the brief life cycle of the material through the plant will be associated with its alpha emitting parents, i.e. the natural uranium isotopes and ^{226}Ra, all alpha emitters. These beta - gamma emitting progeny must be associated with their uranium parent; ^{226}Ra emits alpha particles at greater than 94 percent yield. However, surveys performed with a pancake GM probe (e.g., Ludlum Model 44 - 9 as described in Section 5.7.6.1) will

detect any significant beta contamination present. Since release limits for beta/gamma emitters are identical to alpha ("uranium and progeny products" at 1000/5000 dpm per 100 cm^2), use of these limits for total activity are protective (e.g., Regulatory Guide 1.86 and FC 83-23 as referenced in Regulatory Guide 8.30 - see discussion in Section 5.7.6.3). Additionally, since the personnel "release objective" is near-background, the quantification of potential contribution from other the small amounts of other uranium series nuclides is not likely to be significant.

Although the objective of personnel decontamination is to achieve near-background levels in accordance with Regulatory Guides 8.10 (NRC 1977) and 8.31 (NRC 2002a), should background not be achievable without potential damage to the skin of the affected employee, the approach and limits described in Regulatory Guide 8.30, Section 2.6 will be applied. No requirement is specified therein to establish the nuclide mix associated with the 1,000 dpm/100 cm^2 limit (5,000 dpm/ 100 cm^2 for soles of shoes)..

Should contamination be detected in the facial areas, or should a respirator be found to be contaminated following use, nose and mouth swabs using q-tips or equivalent will be performed. If any contamination is found on the swab, or other evidence suggests that the worker may have received an internal exposure, a bioassay sample will be will be collected as discussed in Section 5.7.5, Bioassay Program. Results of the bioassay analysis will be integrated with the worker's exposure assessment as described in Section 5.7.4.

5.7.6.3 Surveys for Release of Equipment to Unrestricted Areas

5.7.6.3.1 Methods and Procedures

The RSO or RST will survey potentially contaminated items before they are released from the facility. Items which cannot be representatively surveyed due to geometry or any other reason may not be released for unrestricted use. A Ludlum Model 2224 counter and Model 44-9 pancake GM probe, or equivalent, will be used for release surveys. Survey equipment shall be calibrated per manufacturer specifications at least annually. Instruments used to assess surface contamination shall be checked for proper response daily when the plant is operating. Operational tests will be conducted on all survey instruments to ensure they are in working order. All instrument documentation will be maintained on-site.

Equipment and surfaces shall not be painted over or plated for the purpose of meeting release criteria. However, if painting over an area with contamination that cannot reasonably be removed is determined by the RSO to be ALARA, it may be allowed as long as the contamination on the article or surface is characterized and documented. The

item or area must be visibly labeled as contaminated. The radioactivity of pipes, drain lines, pumps, or duct work where access can be difficult, will be determined by making measurements at a trap or similar access point. Adequate records will be maintained to ensure that the article or surface is not inadvertently released for unrestricted use.

AUC will ship yellowcake to other facilities for further processing. Prior to the release of packages containing yellowcake from the ISR facility, the packages shall be washed and thoroughly surveyed to ensure compliance with DOT release standards found in 49 CFR 173.433(a) and (b).

Figure 5-2 depicts the survey locations for yellowcake product and solid 11e.(2) byproduct material trucks and associated decontamination stations.

5.7.6.3.2 Contamination Limits to Be Applied for Release of Equipment and Materials from Restricted Areas

It is important and fundamental to recognize the radiological environment of a modern ISR as related to potential radionuclides of concern for which contamination surveys must be performed, and unrestricted release limits established. Studies performed in the late 1970s and early 1980s of radionuclide mobilization from several ISRs and subsequent measurements at operating ISRs, indicate that a relatively small portion of the uranium daughter products in the ore body are actually mobilized by the lixiviant. (Brown 2007 and Brown 2008).

The vast majority of secular equilibrium radionuclides remain in the host formation. The majority of the mobilized ^{226}Ra (approximately 80 to 90 percent), which is estimated to be five to 15 percent of the calculated equilibrium ^{226}Ra concentrations in the host formation, follows calcium chemistry in the ISR process. Prior to the release of packages containing yellowcake, the packages will be washed, dried and surveyed to ensure compliance with DOT release standards found in 49 CFR 173.433(a) and (b).

5.7.6.3.3 Contamination Limits to Be Applied for Release of Equipment and Materials From Restricted Areas

As noted the vast majority of secular equilibrium radionuclides remain in the host formation. Accordingly, the existing NRC guidance for unrestricted release of equipment and clearance limits for "U-nat, ^{235}U, ^{238}U and associated decay products" is applicable and appropriate for ISR plants, as noted in NRC Regulatory Guide 8.30, Section B, which indicates, "The contents of this guide conform with NRC's current licensing practice."

Recommended surface contamination limits are defined in Regulatory Guide 8.30 Table 2, entitled *Surface Contamination Levels for Uranium and Daughters on Equipment to be Released for Unrestricted Use, on Clothing and in Non-Operating Areas of UR Facilities.* A footnote to Regulatory Guide 8.30 Table 2 indicates the stated contamination levels are taken from Regulatory Guide 1.86, *Termination of Operating Licenses for Nuclear Reactors,* and from *Guidelines for Decontamination of Facilities and Equipment Prior to Release for Unrestricted Use or Termination of Licenses for Byproduct Source or Special Nuclear Material* (NRC 1987). The NRC's Policy and Guidance Directive FC 83-23, (NRC 1983) uses the 1982 version of *Guidelines for Decontamination of Facilities and Equipment Prior to Release for Unrestricted Use or Termination of Licenses for Byproduct Source or Special Nuclear Material,* as its Enclosure 2, presenting the identical radionuclide categories and contamination limits as the 1987 version and Regulatory Guide 1.86.

The 1987 document is essentially identical to the 1982 version referenced in FC 83-23. Accordingly, FC 83-23, and both the 1982 and 1987 versions of *Guidelines for Decontamination of Facilities and Equipment Prior to Release for Unrestricted Use or Termination of Licenses for Byproduct Source or Special Nuclear Material,* use identical radionuclide categories and quantitative release limits, although the 1987 document also specifies dose rate guidance (mrem/hr for beta & gamma emitters). Therefore the radionuclide categories, limits, and intended application of FC 83-23, of *Guidelines for Decontamination of Facilities and Equipment Prior to Release for Unrestricted Use or Termination of Licenses for Byproduct Source or Special Nuclear Material* (1982 and 1987), Regulatory Guide 8.30 and Regulatory Guide 1.86, are all consistent.

It is clear that in terms of historical application by the Federal agencies, the category of "U-nat, ^{235}U, ^{238}U and associated decay products" (as originally used in Regulatory Guide 1.86, incorporated by reference into Regulatory Guide 8.30, is appropriate for the radiological environment of ISRs. Analysis performed to assess the dosimetric/risk based consequences of the application of these limits by NRC indicate they are protective, and provide an appropriate standard of care. Accordingly, the applicable recommendations provided in Regulatory Guide 8.30 will be integrated into the contamination assessment and control elements of the project's radiation protection program

5.7.6.4 ***Survey Methods and Instrumentation***

The RSO or individuals properly trained and authorized by the RSO will perform all contamination surveys of plant areas and of items to be removed from the restricted areas. Guidance for instrument selection and survey methodology is provided in NRC (1992a) and NRC (2000).

Survey equipment will be calibrated annually or at the manufacturer's recommended schedule, whichever is more frequent, and after repair. Verification of instrument operation will be performed using check sources and in accordance with the applicable SOP, prior to each daily use. Variations from reference readings greater than 20 percent will require the instrument to be immediately removed from service, repaired as necessary and recalibrated.

Surface activity will be measured with an appropriate alpha survey meter, e.g., a Ludlum Model 2241 scaler or a Ludlum Model 177 ratemeter with a Model 43-65 or Model 43-5 alpha scintillation probe, or equivalent. Additionally, a portable pancake GM survey meter (e.g., Ludlum Model 44-9) with a beta/gamma probe and/or a Ludlum Model 3 survey meter with a Ludlum 44 series GM probe or equivalent may be utilized. Instruments will be checked before daily use in accordance with the applicable SOP.

5.7.6.5 Routine Daily Inspections, and Qualifications of Personnel Performing Contamination Surveys

In general, the RSO or radiation safety staff will perform all of the daily walkthrough inspections of the plant. However, this can prove problematic on weekends because the RSO and radiation safety staff is typically on site during regular working hours. To address weekend inspection, it has been industry practice to train selected individuals (usually the plant operators) to perform the weekend daily walkthrough inspections and to perform contamination surveys. In order to accomplish this, in addition to their training as radiation workers in accordance with guidance in Regulatory Guide 8.31, Section 2.5, *Radiation Safety Training,* these individuals will receive specific training for inspections for radiological safety, and in the performance of contamination surveys. This training will include specific procedural requirements contained in applicable Standard Operating Procedures and related documentation of inspections. A checklist will be prepared under the direction of the RSO, providing a "tool" that the designated worker shall use to maintain consistency and continuity of this function. Training is documented in the individual's training records. The records of this training and the results of daily walkthrough inspections have been inspected by NRC at current licensee facilities and found to be acceptable.

5.7.7 Airborne Effluent and Environmental Monitoring Programs

5.7.7.1 Air Particulate

Potential air particulate releases from the CPP processes will be monitored in a manner similar to that employed for baseline determination of air particulate concentrations. Sampling locations are selected as recommended in USNRC Regulatory Guide 4.14 (the

Guide), which calls for a minimum of three air monitoring stations at or near the site boundaries, one station at or close to the nearest occupiable structure within 10-km of the site, and one station at a control or background location. Monitoring will be performed using air particulate samplers operating at approximately 30 lpm or better. Filters will be collected monthly in accordance with a modified procedure discussed with the NRC and determined by AUC during pre-operational testing to be effective. Filters will be composited on an approximate quarterly basis to provide average radionuclide air concentrations as noted in the Guide. Each quarterly batch of air filters from the monitoring stations will be submitted to a contract laboratory for analysis in accordance with the Guide. Results of the operational air particulate monitoring program will be reported in the semi-annual effluent reports required by 10 CFR §40.65. The LLD values for air particulate radionuclides as recommended in Regulatory Guide 4.14 (including U-nat, ^{226}Ra, ^{210}Pb, and ^{230}Th) are readily achieved by the selected air particulate monitoring method.

These air particulate monitoring systems have been operated during the pre-operational phase to establish background concentrations of airborne particulate radionuclides. Because the systems are designed to follow applicable regulatory guidance concerning LLD values for airborne particulate radionuclides, and because they are operated continuously with filter analyses performed quarterly by a qualified contract laboratory, their ability to demonstrate compliance with dose limits for members of the public has been demonstrated (Table 5-3).

5.7.7.2 Radon

Radon monitoring will be performed at locations recommended by Regulatory Guide 4.14 (the same locations selected for air particulate monitoring), using the same detectors (high-sensitivity Landauer track etch devices or equivalent) and analysis frequencies (quarterly analysis) as employed during pre-operational monitoring. TR Section 2.9 provides detail concerning ^{222}Rn monitoring systems and procedures.

5.7.7.3 Surface Soil

Soil sampling during operations will be conducted on an annual basis. Locations sampled will be near the air particulate sampling sites (see Section 2.9.6). Five-cm-depth samples will be collected as described in Table 2 of Regulatory Guide 4.14, and will be analyzed in accordance with the Guide, by a certified laboratory.

5.7.7.4 Sediment

During operations, AUC will conduct sediment sampling on an annual basis. Following Regulatory Guide 4.14, discrete grab samples of sediment will be collected at the same baseline surface water sampling locations discussed in ER Section 3.4.1. All sediment samples will be collected to a depth of five cm for consistency with the baseline sediment sampling surveys, then analyzed for natural uranium, ^{226}Ra, ^{210}Pb, and gross alpha

5.7.7.5 Subsurface Soil

Regulatory Guide 4.14 does not recommend subsurface soil sampling during the operational phase at a site. Post-operational subsurface soil samples will be taken following conclusion of operations, and will be compared to the results of the preoperational monitoring program.

5.7.7.6 Vegetation

Preoperational vegetation samples from the Proposed Project site were collected in 2010-2011 at the locations and using the procedures described in Section 2.9 of this document, in accordance with Regulatory Guide 4.14.

During operations, and where a significant pathway to man is identified in individual licensing cases, vegetation, foods, and fish samples should be collected, per Regulatory Guide 4.14. The Guide notes that, during operations, forage vegetation should be sampled at least three times during the grazing season in grazing areas in three different sectors having the highest predicted airborne radionuclide concentration due to milling operations. During operations, MILDOS calculations based on operational radionuclide release values, combined with measured radionuclide concentrations in air during operations, will be used to select forage vegetation sampling locations, per the above guidance, three times during each year of facility operation. The sampling and analysis procedures used for pre-operational vegetation sampling (see Section 2.9) will be used during operational sampling, and analyses will be performed by a certified laboratory in accordance with the Guide.

Note: Preliminary evaluation of radionuclide exposure pathways from the proposed facility through forage vegetation to humans does not indicate that "…a significant pathway to man…" exists. For preoperational assessments performed to date, this is based on the very low measured radionuclide concentration observed in the collected vegetation samples. No significant concentrations exist in the forage analyzed therefore no significant potential for dose to man via meat from forage animals exists.

During operations, the results of operational vegetation sampling will be reviewed immediately, and a determination made as to whether the potential for "…significant pathway to man…" exists. If such potential is determined to exist (that is, if significant radionuclide concentrations are found in forage vegetation), meat sampling will be initiated in accordance with the Regulatory Guide 4.14 specifications: "At least three samples should be collected at the time of harvest or slaughter or removal of animals from grazing for each type of crop (including vegetable gardens) or livestock raised within three-kilometers of the mill site."

5.7.7.7 Direct Radiation

Ambient environmental gamma radiation levels will be monitored continuously at the air monitoring station locations selected per Regulatory Guide 4.14 recommendations. Gamma radiation has been monitored during the pre-licensing period using Landauer X9 OSL environmental dosimeters, and will continue to be monitored through the use of high-sensitivity environmental dosimeters obtained from Landauer or another NVLAP certified vendor, meeting the specifications noted in Regulatory Guide 4.14 (see TR Section 2.9.5). Dosimeters will continue to be exchanged on a quarterly basis.

5.7.7.8 Deep Disposal Well Monitoring

Monitoring of liquid effluent disposed of through the deep disposal well(s) will be conducted in accordance with the Class I Underground Injection Control Permit(s) issued by the Wyoming Department of Environmental Quality-Water Quality Division.

5.7.7.9 Fish

Operational fish sampling is not planned because, as discussed in Section 2.8.4.2.6 of this TR, the lack of habitat and persistent water sources on or near the Proposed Project site precludes the presence of fish.

5.7.8 Groundwater/Surface Water Monitoring Program

During operations at the Proposed Project, a detailed water sampling program will be conducted to identify potential impacts to water resources of the area. AUC's operational water monitoring program includes evaluation of groundwater on a regional basis, groundwater within the Proposed Project area, and surface water on both a regional and site specific basis.

5.7.8.1 Groundwater Monitoring

The groundwater monitoring program is designed to detect potential excursions of lixiviant from a production unit during uranium recovery operations, groundwater restoration and until groundwater restoration has been approved. The groundwater monitoring program will include perimeter ring and overlying monitor wells.

5.7.8.1.1 Private Well Monitoring

All private wells used for drinking water, livestock watering or crop irrigation within two-kilometers of the wellfield area boundary will be sampled for baseline values and on a quarterly basis during operations, given the owner's consent. Groundwater samples will be analyzed for parameters as identified in Regulatory Guide 4.14 Table 2.

5.7.8.1.2 Production Unit Baseline Sampling

AUC commits to the following sampling routine. Recovery and injection wells within each production unit will be sampled four times with a minimum of two weeks between sampling events to establish baseline groundwater quality for each production unit. Wells will be selected based on a density of one well per four acres of ISR unit. The first and second sample events will include analyses for all constituents of concern listed in Table 2.7B-22 in Addendum 2.7-B. If specific constituents are not detected during the first and second sampling events, those constituents will not be analyzed for during the third and fourth sample events.

AUC proposes to adapt the statistical principles described in the Statistical Analysis of Groundwater Monitoring Data at RCRA Facilities, Unified Guidance, March 2009, EPA 530/R-09-007 (Unified Guidance). The principles in the Unified Guidance are embodied in the EPA sourced ProUCL software, plus as required, WDEQ regulations and guidance that is consistent with ProUCL. AUC will use the Unified Guidance to evaluate baseline groundwater geochemical data for all identified constituents, establishing restoration target values (RTVs) for each production unit. The data will describe in detail the data distributions and spatial and temporal dependencies for each constituent. Where appropriate, groups of wells may be subdivided to assure representativeness of populations.

The first step in the application of the Unified Guidance is to validate the analytical data, using a series of Standard Operating Procedures (SOPs) for both sampling and laboratory analytical procedures. These SOPs will be developed and implemented prior to commencement of operations. Groundwater quality data that passes the data validation will be incorporated into AUC's monitoring database.

The process will include a statistically sound treatment of Outliers and Non-Detects. Outliers, which are anomalously high or low values relative to the other values, will be determined using ProUCL and procedures described in WDEQ/LQD Guideline 4, Attachment 1, which has been determined to be consistent with the principles included in ProUCL and the Unified Guidance. Sample results that are determined to be true Outliers will be removed from the statistical analysis that is used to calculate RTVs.

The treatment of Non-Detects will also be accomplished using the principles outlined in the Unified Guidance, and will be used to populate the RTV listing.

5.7.8.1.3 Monitoring Well Baseline Water Quality

AUC commits to the following sampling routine. Perimeter monitor well ring wells will be installed within the Production Zone Aquifer, outside the production pattern area in a "ring" around the wellfield area. Also, monitor wells will be installed within the overlying aquifer at a minimum density of one well per every four acres of pattern area. Four samples will be collected from each overlying and perimeter ring monitoring well at least two weeks apart for constituents of concern, as listed in Table 2.7B-22 in Addendum 2.7-B, to establish baseline groundwater quality for each monitor well.

The first and second sample events will include analyses for all constituents of concern listed in Table 2.7B-22 in Addendum 2.7-B. If specific constituents are not detected during the first and second sampling events, those constituents will not be analyzed for during the third and fourth sample events.

Upper Control Limits (UCL's) are determined for these wells from the baseline groundwater quality data. The UCLs will be used in operational excursion monitoring. AUC will adapt the statistical principles described in the Statistical Analysis of Groundwater Monitoring Data at RCRA Facilities, Unified Guidance, March 2009, EPA 530/R-09-007 (Unified Guidance) to determine the UCLs.

As determined from the numerical groundwater flow model described in Addendum 2.7-C of this TR, the distance between the perimeter ring monitor wells will be no more than 500 feet and the distance between these monitor wells and the production patterns will also be no more than 500 feet for Production Units located within the fully saturated portion of the PZA. The model determined a distance of 400 feet between the perimeter ring monitor wells and 400 feet between these monitor wells and the production patterns for Production Units located within the partially saturated portion of the PZA is appropriate. The acceptable distance between monitor wells and the production patterns also took into account the demonstration that if an excursion were to occur, production fluids could be controlled within 60 days, as required by WDEQ rules and regulations.

5.7.8.1.4 Production Unit Hydrologic Data Package

Field data collection for the hydrologic data package will include a production unit scale hydrologic pump test. Following completion of the field data collection, the Production Unit Hydrologic Data Package is assembled and submitted to the WDEQ for review and approval. In accordance with NRC Performance Based Licensing requirements, the Production Unit Hydrologic Data Package is reviewed by a Safety and Environmental Review Panel (SERP) to ensure that the results of the hydrologic testing and the planned ISR activities are consistent with technical requirements and do not conflict with any requirement stated in NRC regulations or in the NRC license. A written SERP evaluation will evaluate safety and environmental concerns and demonstrate compliance with applicable NRC license requirements as previously discussed in Section 5.2.4. The written SERP evaluation will be maintained at the site. Additionally, AUC will provide a copy of the Production Unit Hydrologic Data Package to NRC for review only.

The Production Unit Hydrologic Data Package contains the following:

- A description of the proposed production unit (location, extent, etc.);
- A map(s) showing the proposed production patterns and locations of all monitor wells;
- Geologic cross-sections and cross-section location maps;
- Isopach maps of the Production Zone sand, overlying confining unit and underlying confining unit;
- Discussion of how the hydrologic test was performed, including well completion reports;
- Discussion of the results and conclusions of the hydrologic test including pump test raw data, drawdown match curves, potentiometric surface maps, water level graphs, drawdown maps and when appropriate, directional transmissivity data and graphs;
- Sufficient information to show that wells in the monitor well ring are in adequate communication with the production patterns;
- Baseline water quality information including proposed UCLs for monitor wells and production unit restoration target values; and
- Any other information pertinent to the area tested will be included and discussed.

5.7.8.1.5 Operational Upper Control Limits and Excursion Monitoring

Baseline ground water quality for the monitor wells for a particular production unit will be established prior to the start of operation of each production unit . These baseline data are utilized to establish upper control limits (UCLs) for chemical constituents chosen to

detect possible lixiviant migration or excursion. According to NUREG-1569, Section 5.7.8.3 (Criterion 5), the license applicant selects a minimum of three excursion indicator constituents and establishes those UCLs. The chemical constituents chosen by AUC for indicators of lixiviant migration and for which UCLs will be set are chloride, conductivity, and total alkalinity. The same Section 5.7.8.3 notes that exceeding two of the three UCLs for those chemical constituents would be indicative of an excursion from the well field.

Once a production unit is in operation, groundwater sampling for potential lixiviant excursion will begin. Chloride was chosen due to its low natural levels in the native groundwater and because chloride is introduced into the lixiviant from the ion exchange process (uranium is exchanged for chloride on the ion exchange resin). Chloride is also a mobile and persistent constituent in the groundwater and will be detected quickly in the case of a lixiviant migration to a monitor well. Conductivity was chosen because it is an excellent general indicator of overall groundwater quality. Total alkalinity concentrations should be affected during an excursion because bicarbonate is the major constituent added to the lixiviant during the ISR process. Water levels are obtained and recorded prior to each well sampling. However, water levels are not used as an excursion indicator. Upper control limits will be set based on the use of ProUCL.

Operational monitoring consists of sampling the monitor wells at least twice monthly and at least 10 days apart and analyzing the samples for the excursion indicators chloride, conductivity, and total alkalinity. AUC requests that in the event of certain situations such as inclement weather, mechanical failure, or other factors that may result in placing an employee at risk or potentially damaging the surrounding environment, NRC allow a delay in sampling of no more than five days. In these situations, AUC will document the cause and the duration of any delays.

To assure water within the well casing has been adequately displaced and/or formation water is sampled, wells will be purged before sample collection to ensure representative water is obtained. Samples will be taken when field water quality parameters such as pH and specific conductivity appear to be stable and consistent with the anticipated water quality of the area. Low-flow purging may also be used in certain instances to prevent pulling of process fluids to the monitor well from excessive purging which ensures only formation water is sampled.

Water level and analytical monitoring data for the UCL parameters are reported to the WDEQ/LQD on a quarterly basis. This data is retained on site for review by the NRC.

5.7.8.1.6 Excursion Verification and Corrective Action

During routine sampling, if two of the three UCL values are exceeded in a monitor well an excursion is deemed to have occurred. According to NUREG-1569, Section 5.7.8.3 (Criterion 5), a series of sampling events must occur to verify the excursion event. AUC will follow those guidelines listed here.

- Following the first sample of the monitor well in question (where at least two of the three UCLs were exceeded), a second verification sample must be taken within 48 hours after receiving the initial sample's data;
- If the second sample's UCLs are not exceeded, then a third verification sample must be taken within 48 hours after receiving the second sample's data;
- If neither the second or third sample's data do not exceed the UCLs, then the original sample's data is considered in error, and the well is removed from excursion status; and
- If either the second or third sample contains indicators above UCLs, an excursion is confirmed, the well is placed in excursion status, and corrective action must be initiated.

Upon verification of an excursion, the USNRC Project Manager and the WDEQ/LQD is notified by telephone or email within 24 hours and notified in writing within seven days as required by NUREG-1569, Section 5.7.8.3 (Criterion 5). Additionally, a more detailed written report describing the excursion event, corrective actions, and corrective action results will be submitted to the NRC within 60 days of the excursion confirmation.

If an excursion is verified, the following methods of corrective action will be instituted (not necessarily in the order given) dependent upon the circumstances:

- A preliminary investigation will be completed to determine the probable cause;
- Production and/or injection rates in the vicinity of the monitor well will be adjusted as necessary to increase the net bleed, thus forming a hydraulic gradient toward the production zone;
- Individual wells will be pumped to enhance recovery of recovery solutions.
- Injection into the well field area adjacent to the monitor well may be suspended. Recovery operations continue, increasing the overall bleed rate and the recovery of wellfield solutions;
- According to NUREG-1569, Section 5.7.8.3 (Criterion 5), stability in the excursion indicator concentrations must be demonstrated by measurements over a suitable time period before the corrective action measures can be discontinued. AUC will increase sampling frequency of any monitor well on excursion status to a minimum of once every seven days; and

- In compliance with NUREG-1569, Section 5.7.8.3 (Criterion 5), AUC will consider corrective action complete when all excursion indicators are below their respective UCLs, or if only one excursion indicator exceeds its respective UCL by less than 20 percent.

If an excursion is not controlled within 30 days following confirmation of the excursion, the WDEQ requires a sample must be collected from each of the affected monitoring wells and analyzed for the following parameters: ammonia; antimony; arsenic; barium; beryllium; bicarbonate; boron, cadmium, calcium, carbonate; chloride; chromium; conductivity; copper; fluoride; gross alpha; gross beta; iron; lead; magnesium; manganese; mercury; molybdenum; nitrate + nitrite; pH; potassium; selenium; sodium; sulfate; ^{226}R and ^{228}Ra; thallium; TDS; uranium; vanadium; and zinc.

According to NUREG-1569, Section 5.7.8.3 (Criterion 5), "If an excursion is not corrected within 60 days of confirmation, applicants must either terminate injection of lixiviant into the well field until the excursion is retrieved, or provide an increase to the reclamation assurance in an amount that is agreeable to NRC and that would cover the expected full cost of correcting and cleaning up the excursion. The assurance increase must remain in force until the excursion is corrected. The written 60-day excursion report should state and justify which course of action will be followed."

If an excursion is controlled, but the fluid which moved out of the production zone during the excursion has not been recovered within 60 days following confirmation of the excursion, the operator will submit to the WDEQ/LQD and the NRC within 90 days following confirmation of the excursion a plan and compliance schedule meeting the requirements of LQD Rules and Regulations, Chapter 13, Section 13(b).

A monthly report on the status of an excursion shall be submitted to the LQD administrator beginning the first month the excursion is confirmed and continuing until the excursion event is successfully completed. The monthly report shall contain the requirements described in LQD Rules and Regulations, Chapter 12, Section 12(e).

5.7.8.2 Surface Water Monitoring

Pre-operational surface water quality monitoring was performed as discussed in Sections 2.7 and 2.9. The Proposed Project area does not contain perennial streams and all surface water features are ephemeral and only contain natural runoff during heavy rainfall and snowmelt events. Current coal-bed methane operations contribute a small amount of surface discharge, which maintains some ponding at select locations across the site for portions of the year (Figure 2.7A-7). Samples from all pre-operational surface water locations will be obtained quarterly when water is present. Surface water samples will be analyzed for Regulatory Guide 4.14 Table 2 (1980) parameters. Surface water monitoring

results will be submitted in the semi-annual environmental and effluent reports submitted to NRC.

See Table 5-4 containing a summary of the Elements of Operational Environmental Monitoring Program.

5.7.9 Quality Assurance Program

AUC will make every reasonable effort to maintain radiation exposure, and releases of radioactive materials in effluents to unrestricted areas, as is reasonably achievable. To do this, AUC will implement a Quality Assurance (QA) program at the Proposed Project for all relevant operational monitoring and analytical procedures. The objective of the program will be to identify any deficiencies in the sampling techniques and measurement processes so that appropriate corrective actions can be implemented to obtain a level of confidence in monitoring programs results. The proposed QA program will cover radiological and non-radiological monitoring activities, and will help ensure that all radiological and non-radiological measurements and monitoring programs are reasonably valid and of a defined quality.

The QA section will include both planned and systematic actions necessary to provide adequate confidence in the assessment of all monitored results. A Quality Control (QC) section will be included in the QA, and will include Proposed Projects to provide accepted measurement techniques, control the characteristics of measurement equipment, and proposed processes that will meet established standards. The QA program will provide assurance to the regulatory agencies and to the public that the monitoring results are valid. The AUC QA Program will include the following criteria:

- Establish and apply all radiological, effluent and environmental programs to be consistent with RG 4.14 (Sections 3 & 6) (NRC 1980) and RG 4.15 (1979);
- Ensure all record keeping is in accordance with NUREG-1569 (Section 5.3.2); included will be the provision under 10 CFR 20 stating the licensee must retain survey and calibration records for three years instead of the two years mentioned in RG 4.15 (NRC, 1979); and

  Address all aspects of decommissioning including a confidence interval (or one to be specified) before collecting decommission samples. This data will be used to demonstrate compliance and that the QA procedures to verify the compliance data are precise and accurate.

Additionally, the QA program will address the following:

- Formal delineation of organizational structure and management responsibilities. Responsibility for both review/approval of written procedures and monitoring data/reports will be provided;
- Minimum qualifications and training programs for individuals performing radiological monitoring and those individuals associated with the QA program;
- Written procedures for QA activities. These procedures will include activities involving sample analysis, calibration of instrumentation, calculation techniques, data evaluation, and data reporting;
- QC in the laboratory. Procedures will cover statistical data evaluation, instrument calibration, duplicate sample programs and spike sample programs. Outside laboratory QA/QC programs are included; and
- Provisions for periodic management audits to verify that the QA program is effectively implemented, to verify compliance with applicable rules, regulations and license requirements, and to protect employees by maintaining effluent releases and exposures ALARA.

The QA Program will include the following procedures addressing:

- Environmental monitoring;
- Testing;
- Exposure monitoring;
- Equipment operation and maintenance;
- Environmental and Employee health and safety; and
- Incident response.

AUC has identified six key positions of the organization and their responsibilities in application Sections 5.1 and 5.2. These positions include the:

- Board of Directors;
- President and Chief Executive Officer;
- Reno Creek General Manager;
- Manager of Environmental Health and Safety;
- Radiation Safety Officer; and
- Radiation Safety Technician.

AUC has designated the Manager of Environmental Health and Safety to be responsible for all radiation protection, health and safety, environmental, and QA programs and for ensuring that AUC complies with all applicable regulatory requirements. The Manager of Environmental, Health and Safety (EHS) reports directly to the General Manager and supervises the Radiation Safety Officer (RSO) to ensure that the radiation safety and

environmental monitoring and protection programs are conducted in a manner consistent with regulatory requirements.

The RSO is responsible for the development, administration, and enforcement of all radiation safety programs in accordance with the facility license, Regulatory Guide 8.31, Section 1.2 (NRC, 2002), and all other applicable regulations and guidance. The RSO is authorized to conduct inspections and to immediately order any change necessary to preclude or eliminate radiation safety hazards and/or maintain regulatory compliance. The RSO is also responsible for implementing all on-site environmental programs, including emergency procedures, training programs for both the staff and the Radiation Safety Technicians, and sampling and inspection processes. AUC will assure that all personnel performing quality-related activities are qualified to perform their assigned jobs and tasks through meeting basic job description requirements, education standards, experience, and ongoing performance reviews.

The AUC QA program will be audited periodically. The audits will be conducted by individuals qualified in radiochemistry and monitoring techniques. However, the auditors will not have direct responsibilities in the areas being audited. An example of an appropriate auditor is an outside consultant. The results of the audits will be documented and provided to the NRC and made available to members of management with authority to enact any changes needed (i.e., RSO, General Manager, etc.).

5.7.9.1 Quality Assurance Plan – Operating Procedures and Instructions

AUC will prepare a Quality Assurance Plan (QAP) for the Proposed Project, to be implemented consistent with NRC Regulatory Guide (RG) 4.15 "Quality Assurance for Radiological Monitoring Programs (Inception through Normal Operations to License Termination—Effluent Streams and the Environment" (NRC, 2007). The QA Program will also utilize applicable criteria in NUREG-1569, Standard Review Plan for In Situ Leach Uranium Extraction License Applications, Section 5.7.9.3.

The AUC QAP will describe methods acceptable for use in designing and implementing QA and QC requirements and procedures, as referenced in RG 4.15. These methods will be developed to ensure a strong emphasis on quality issues when evaluating the results of radioactive material measurements in effluents from the Proposed Project processing facility. The AUC QAP will follow Section B of RG 4.15 to ensure that the licensee or the licensee's contractors actually performing effluent and environmental monitoring will include the QAP elements. Following Section C of RG 4.15, the QAP will include a requirement that all contractors or subcontractors performing monitoring services for AUC will to provide their own QAP. The AUC QAP will also contain information that

meets compliance with the applicable requirements of 10 CFR Part 20 using the acceptance criteria presented in NUREG-1569, Section 5.7.9.3 (NRC, 2003).

AUC will conduct audits and/or certification reviews for all laboratories used to analyze samples collected for characterization, compliance, or other purposes. AUC will ensure that the QAP will define the appropriate procedures for sampling; analysis, and data handling, that those specific procedures will be thoroughly documented. These identified procedures will reference nationally recognized industry sampling methods and standards, such as EPA methods, American Society for Testing and Materials, or recommended procedures from specific instrument manufacturers. AUC will provide field quality objectives for field and analytical methods that are industry standards, and laboratory quality objectives that will include precision, bias, accuracy, representativeness, comparability, and sensitivity, consistent with NRC Regulatory Guide 4.15.

AUC understands that the QAP will be subject to NRC inspection and written verification prior to and during active operations. AUC will develop applicable standard operating procedures (SOPs) before the preoperational inspection and before operations will begin, as required by the standard license condition in SER Appendix A. AUC will maintain records for receipt, transfer, and disposal of source or byproduct material processed or produced at the site. These records will to include surveys, sampling, and calibrations, and will be maintained for the radiation safety and environmental monitoring programs for the period described by regulation or license, in accordance with 10 CFR Part 20, Subpart L. AUC will maintain records that document activities performed in the QAP, to include field logs, chain-of-custody, measurement results, instrument performance checks, calibration, data reduction, and data review and approvals.

The AUC QAP will develop requirements involving sample identification, sample collection techniques, sample handling, storage protocols, chain of custody, packaging and sample shipping integrity. The QAP will require contractors and subcontractors performing support program activities (e.g., sampling, analysis, evaluations, and records) to retain their own field sampling records, as specified in the AUC QAP, and to be implemented consistent with NRC Regulatory Guide 4.15.

AUC will ensure that proper maintenance, calibration, and use of equipment and instruments are implemented to ensure the quality of all collected data, which will include use of calibration standards or sources traceable to the National Institute of Standards and Technology. Specific QAP sampling procedures will be included in applicable SOP's, and include field equipment, instruments, and associated supplies used to obtain field measurements and collect samples. Also, the AUC onsite laboratory will maintain a schedule for servicing critical equipment, will perform routine maintenance

and repair, and will coordinate with the specific equipment vendors to arrange for required maintenance and repairs.

AUC will maintain routine QC checks regarding equipment calibration and standards reference checks, and will track trends to identify acceptable performance. AUC will also ensure that these routine QC checks will be documented within the applicable SOPs. Also, AUC will conduct radiological measurements for the monitoring programs using performance-based verification and validation (V&V), consistent with Regulatory Guide 4.15. AUC will utilize computer software to demonstrate project method validation. AUC understands that an acceptable validation method is necessary before collecting monitoring program measurements or analyzing radiological samples. AUC knows the importance of validating specific analytical methods used to demonstrate that the quality of analytical results can meet the analytical protocol specifications.

AUC will evaluate initial and ongoing QAP effectiveness by monitoring radiological monitoring program quality. AUC will review and document results of assessments, audits, and surveillance elements, consistent with Regulatory Guide 4.15, and will conduct periodic reviews of contractors providing materials, supplies, or services that could affect laboratory's operations quality. The QAP will discuss and include elements of an assessment and audit program, and will describe how an effective assessment, audit, and surveillance program will be implemented at the Proposed Project. AUC will use qualified personnel, consistent with Regulatory Guide 4.15, to conduct a QAP assessments and audits.

The AUC QAP will include integral components that identify areas for improvement, define performance or programmatic deficiencies, and initiate appropriate corrective or preventive actions. The QAP will discuss both effluent and environmental monitoring programs for continuous improvement and implementation of corrective actions if adverse conditions are identified.

Table 5-1: Radiation Detectors

Detector System Model (or equivalent)	Radiation Detected	Type	Characteristics
Ludlum Model 43-1 probe	Alpha	Contamination survey; lab swipe	AnS(Ag) scintillation. 75 cm^2 active surface. Window 0.8 mg/cm^2. Efficiency: 33% Pu-239. Bg: <3 cpm.
Ludlum Model 2241-2 with 43-2 probe	Alpha	Scaler/ratemeter	Alpha survey. ZnS(Ag) scintillator. Efficiency: 30% Pu-239. Window: 0.8 mg/cm^2. Active surface: 12 cm^2. Background < 3 cpm.
Ludlum Model 2929 with 43-10-1 head	Alpha/beta	Sample counter	Dual channel. ZnS(Ag) on plastic scintillation disk. Window: 0.4 mg/cm^2. Efficiency (4Pi): 32% for Th-230, 26% for Sr-90. Background: <3 cpm alpha; 80 cpm beta. 2" sample holder.
Ludlum 44-9 pancake probe with Model 3 Ratemeter.	Alpha/beta/gamma	GM	Analog, rugged system. 15 cm^2 surface. 0-200 mR/hr gamma. 0-660k cpm alpha/beta/gamma. 3300 cpm/mR/hr gamma. Window: 1.7 mg/cm^2 mica. Efficiencies (4Pi): 22% for Sr-90; 15% for Pu-239. (good sensitivity for alpha/beta, low but useful sensitivity for gamma).
Ludlum Model 12S	Micro R meter	All in one gamma detector	0-3 mR/hr. Analog. Low-level gamma survey. 1" NaI detector. Sensitivity: 175 cpm/mR/hr Cs-137. Energy dependent.
Ludlum Model 44-10 probe with 2350/60 datalogger	Gamma	2" NaI(Tl) detector	Very sensitive gamma detector. 2" NaI detector. Sensitivity: 900 cpm/uR/hr Cs-137. Background 9750 cpm. Efficiency: 4% I-125. Energy dependent. Datalogger has data memory and multi-instrument memory.
Eberline RAS-1		Air sampler	Regulated 110V air pump with filter holder capability.
SKC Model PCXR4		Air pump	Battery powered 1-5 lpm regulated air pump.
Ludlum Model 19	Micro R meter	All in one gamma detector	High gamma sensitivity. 0-5k uR/hr range. 175 cpm/uR/hr (Cs-137). Energy dependent.
Ludlum Model 43-5	Alpha	Equipment, surface survey	ZnS(Ag). Efficiency: 13% Pu-239. Window: protected 0.8 mg/cm^2 50 cm^2 active. Background: <3 cpm.
Ludlum Model 44-116	Beta	Equipment, surface survey	Plastic scintillator, protected 100 cm^2 active area. Efficiency (4Pi): 30% Sr-90. Gamma sensitivity: 20 cpm/uR/hr. Background: < 300 cpm beta.

Note: Detector LLD's may be calculated per USNRC Reg. Guide 8.30.

Table 5-2: Environmental Air Monitoring Dose Detection Limits – Solubility Class

Isotope	Class	10 CFR Part 20 Appendix B Effluent Concentrations – Table 2 Air uCi/ml	Regularly Guide 4.14 Recommendations Air uCi/ml
^{210}Pb	D, all compounds	6 E-13	2 E-15, not specified
^{226}Ra	W, all compounds	9 E-13	1 E-16, not specified
^{222}Rn	With daughters progeny removed	1 E-8	2 E-10, not specified
	With daughters present	1 E-10	
^{230}Th	W, see ^{226}Th	2 E-14	1 E-16, not specified
	Y, see ^{226}Th	3 E-14	
U-nat	D, see ^{230}U	3 E-12	1 E-16, not specified
	W, see ^{230}U	9 E-13	
	Y, see ^{230}U	9 E-14	

Table 5-3: Environmental Air Monitoring Dose Detection Limits

Radionuclide	DAC (uCi/mL)	Regulatory Guide 4.14 LLD (uCi/mL)	LLD Dose (Mrem/yr)
U-nat (UO_2, U_3O_8)	1.00E-10	1.00E-16	2.19E-02
^{226}Ra	3.00E-10	1.00E-16	7.30E-03
^{210}Pb	3.00E-10	2.00E-15	1.46E-01
^{230}Th	3.00E-12	1.00E-16	7.30E-01

Overall detection limit for CEDE (mrem/yr)=0.91

Table 5-4: Summary of the Major Elements of the Operational Environmental Monitoring Program

Program Element/Section Reference	Location	Radionuclides Analyzed	Sampling Frequency
Existing Groundwater Supply Wells	Private wells within 2-km of project area similar to pre-operational baseline monitoring	Dissolved and suspended uranium, ^{226}Ra, ^{230}Th, ^{210}Pb, ^{210}Po	Quarterly
Surface Water	Surface waters passing through project area and reservoirs subject to runoff similar to pre-operational baseline monitoring	Dissolved and suspended uranium, ^{226}Ra, ^{230}Th, ^{210}Pb, ^{210}Po	Quarterly (as available)
Particulates in Air [1]	Locations with the highest predicted concentrations, nearest residences and control location similar to preoperational baseline monitoring	Total uranium, ^{230}Th, ^{226}Ra, ^{210}Pb	Continuous-Composites of filters analyzed quarterly
Radon in Air	Particulate in air locations and other areas of interest similar to pre-operational baseline monitoring	^{222}Rn	Continuous via Track-Etch units or equivalent — analyzed quarterly
Soil	Particulate in air locations and other locations with the highest predicted concentrations similar to preoperational baseline monitoring	Total uranium, ^{226}Ra, ^{210}Pb	Annually
Sediment	Surface waters passing through project area and reservoirs subject to runoff similar to pre-operational baseline monitoring	Total uranium, ^{226}Ra, ^{210}Pb	Annually (as available)
Direct Radiation	Particulate in air locations and other areas of interest similar to pre-operational baseline monitoring	Continuous via TLD or OSL or equivalent dosimetry	Quarterly

[1] Location of air particulate samplers used during the preoperational baseline monitoring will be re-evaluated for operational monitoring based on results of the pre-operational meteorological monitoring program (Section 2.5) and the results of the MILDOS-AREA analysis (Section 7.3) to insure at least 3 locations are selected representing 3 different sectors that have the highest predicted concentrations of radionuclides

Figure 5-1: AUC Organizational Chart

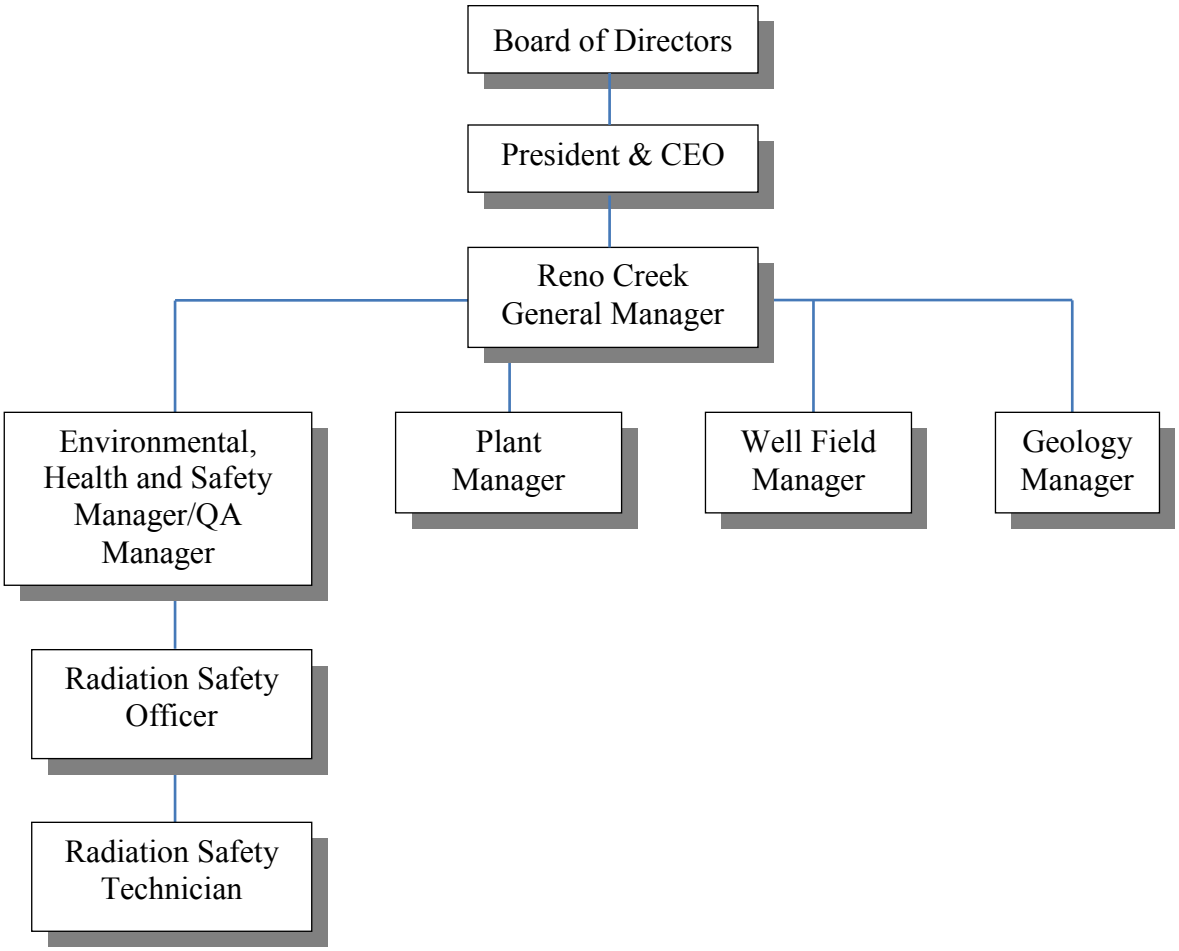

Figure 5-2: Radiological Survey Locations

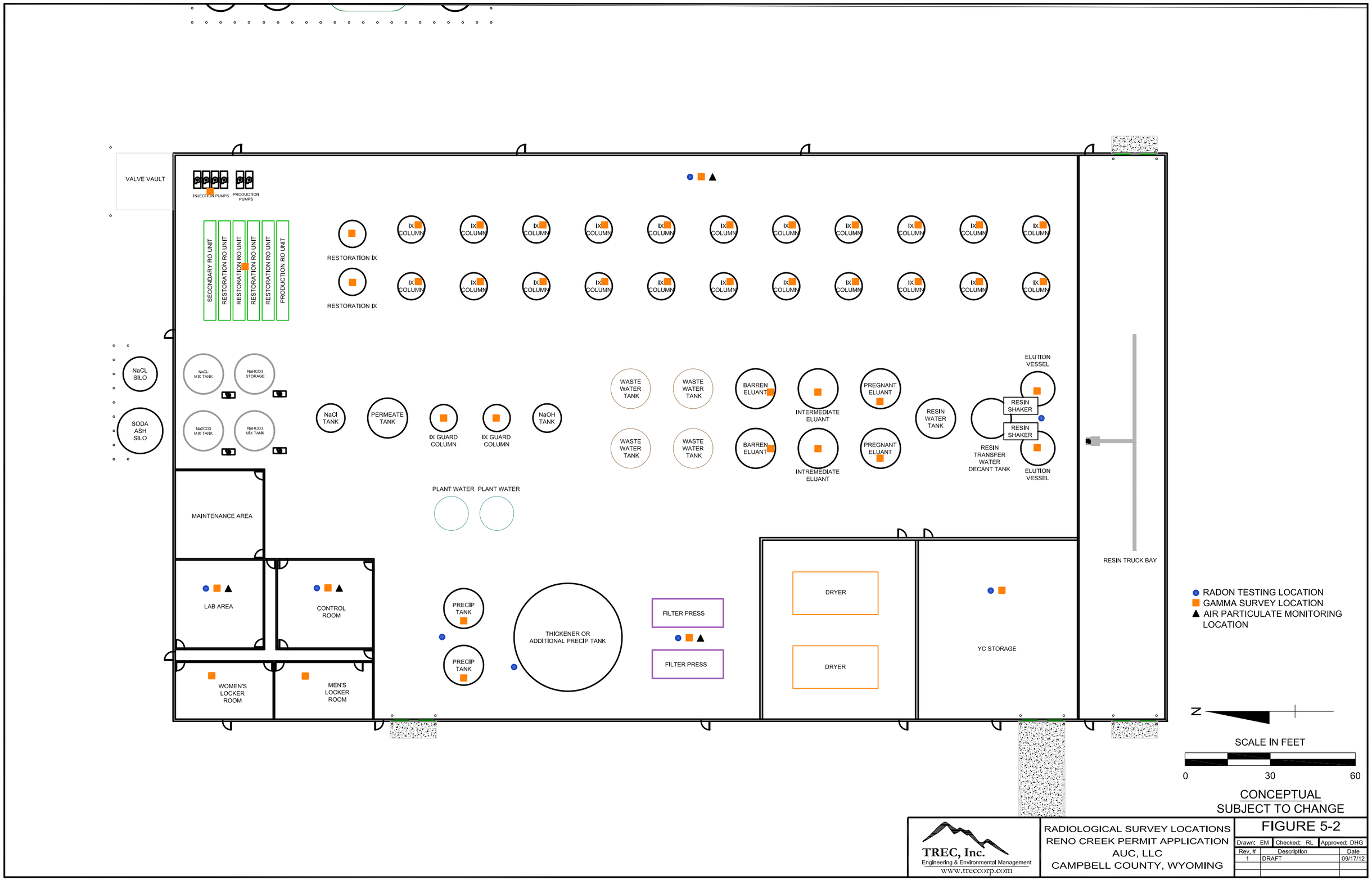

5.8 References

Brown, S. The New Generation of Uranium In Situ Recovery Facilities: Design Improvements Should Reduce Radiological Impacts Relative to First Generation Uranium Solution Mining Plants. 2008. Proceedings of the 2008 Waste Management Symposium, Phoenix. ASME Press, New York, NY, ISBN # 978160560422.

Brown, S. Radiological Aspects of In Situ Uranium Recovery. American Society of Mechanical Engineers. 2007. Proceedings of 11th International Conference on Environmental Management, Bruges, Belgium; ASME Press, New York, NY, ISBN 0-7918-3818-8.

IAEA (International Atomic Energy Agency). 1976. Safety Series No. 43, Manual on Radiological Safety in Uranium and Thorium Mines and Mills.

ICRP (International Commission on Radiation Protection). 1997. Publication 78, Individual Monitoring for Internal Exposure of Workers.

Kathren R.L. and Burklin R.K. Proposed Standards for Acute Exposure to Low Enriched Uranium for Compliance with 10 CFR 70.61. Operational Radiation Safety, V. 95.2, Page S123. August 2008.

Metzger, R., Wichers, D., Vaselin, J., Velasquez, P. 1997, Solubility Characteristics of Airborne Uranium from an In-Situ Uranium Processing Plant, Health Physics 72.3, p 418, March 1997.

Tairova, G., Boucher, M., Toews, K., Ioffe, M., Takala, J., Murchie, M., and Ozberk, E., 2010, Solubility Of Radionuclides In Simulated Lung Fluid, Cameco Corporation. Proceedings of URANIUM 2010, The Third International Conference on Uranium, Saskatoon, Saskatchewan, Canada, August 2010.

NRC (U.S. Nuclear Regulatory Commission). 2000. NUREG-1575, Revision 1, Multi-Agency Radiation Survey and Site Investigation Manual (MARSSIM).

NRC (U.S. Nuclear Regulatory Commission). Regulatory Guide 3.56, *General Guidance For Designing, Testing, Operating, and Maintaining Emission Control Devices at Uranium Mills,* May 1986.

NRC (U.S. Nuclear Regulatory Commission). Regulatory Guide 4.14, *Radiological Effluent and Environmental Monitoring at Uranium Mills*, Revision 1, April 1980.

NRC (U.S. Nuclear Regulatory Commission). 2007 Revision and 1979, Regulatory Guide 4.15, *Quality Assurance for Radiological Monitoring Programs (Inception through Normal Operations to License Termination) – Effluent Streams and the Environment,* February 1979. Revised 2007.

NRC (U.S. Nuclear Regulatory Commission). 1977, Regulatory Guide 8.10, *Operating Philosophy for Maintaining Occupational Radiation Doses As Low As is Reasonably Achievable*, May 1977.

NRC (U.S. Nuclear Regulatory Commission). Regulatory Guide 8.13, *Instruction Concerning Prenatal Radiation Exposure*, Revision 3, June 1999.

NRC (U.S. Nuclear Regulatory Commission). Regulatory Guide 8.15, *Acceptable Programs For Respiratory Protection*, Revision 1, October 1999.

NRC (U.S. Nuclear Regulatory Commission). Regulatory Guide 8.2, *Administrative Practices In Radiation Surveys And Monitoring*, August 2010.

NRC (U.S. Nuclear Regulatory Commission). Regulatory Guide 8.22, *Bioassay at Uranium Mills*, Revision 1, August 1988.

NRC (U.S. Nuclear Regulatory Commission). Regulatory Guide 8.25, *Air Sampling in the Workplace*, Revision 1, June 1992.

NRC (U.S. Nuclear Regulatory Commission). Regulatory Guide 8.29, *Instructions Concerning Risks From Occupational Radiation Exposure* (Revision 1, February 1996).

NRC (U.S. Nuclear Regulatory Commission). Regulatory Guide 8.30, *Health Physics Surveys in Uranium Recovery Facilities*, Revision 1, May 2002.

NRC (U.S. Nuclear Regulatory Commission). Regulatory Guide 8.31, *Information Relevant to Ensuring That Occupational Radiation Exposures at Uranium Recovery Facilities Will Be As Low As Reasonably Achievable*, Revision 1, May 2002.

NRC (U.S. Nuclear Regulatory Commission). 1992a, Regulatory Guide 8.34, *Monitoring Criteria and Methods To Calculate Occupational Radiation Doses*, July 1992.

NRC (U.S. Nuclear Regulatory Commission). Regulatory Guide 8.36, *Radiation Exposure to the Embryo/Fetus*, July 1992.

NRPB (National Radiation Protection Board). 2002, Industrial Uranium Compounds: Exposure Limit, Assessment of Intake and Toxicity after Inhalation, W22.

TABLE OF CONTENTS

6 GROUNDWATER QUALITY RESTORATION, SURFACE RECLAMATION, AND FACILITY DECOMMISSIONING 6-1
6.1 Groundwater Restoration 6-1
6.1.1 Groundwater Restoration Criteria 6-2
6.1.2 Determination of Conclusion of Groundwater Restoration 6-2
6.1.2.1 Determination of Groundwater Restoration Target Values 6-3
6.1.3 Groundwater Restoration Monitoring 6-4
6.1.4 Groundwater Restoration Methods 6-5
6.1.4.1 Groundwater Transfer 6-6
6.1.4.2 Groundwater Sweep 6-7
6.1.4.3 Reverse Osmosis Treatment with Permeate Injection and Reductant Addition 6-7
6.1.4.4 Alternate Groundwater Restoration Method 6-8
6.1.5 Restoration Stability Monitoring 6-9
6.1.5.1 Estimate of Treated Pore Volumes 6-11
6.1.6 Restoration Schedule 6-12
6.1.7 Effectiveness of Groundwater Restoration Methods 6-13
6.1.7.1 Reno Creek Project 6-13
6.1.7.2 Irigaray Uranium Project 6-14
6.1.7.3 Smith Ranch-Highland Uranium Project 6-15
6.1.8 Environmental Effects of Groundwater Restoration 6-15
6.1.9 Well Plugging and Abandonment 6-16
6.1.10 Restoration Wastewater Disposal 6-16
6.2 Plans and Schedules for Reclaiming Disturbed Lands 6-17
6.2.1 Surface Disturbance 6-19
6.2.2 Topsoil Handling and Replacement 6-21
6.2.3 Final Contouring 6-21
6.2.4 Re-Vegetation Practices 6-21
6.3 Procedures for Removing and Disposing of Structures and Equipment 6-22
6.3.1 Preliminary Radiological Surveys and Contamination Control 6-22
6.3.2 Removal of Process Buildings and Equipment 6-23
6.3.2.1 Building Materials, Equipment and Piping to be Released for Unrestricted Use 6-23
6.3.2.2 Preparation for Disposal at a Licensed Facility 6-24
6.3.3 Waste Transportation and Disposal 6-24
6.4 Methodologies for Conducting Post-Reclamation and Decommissioning Radiological Surveys 6-24
6.4.1 Cleanup Criteria 6-24
6.4.1.1 Determination of Radium Benchmark Dose 6-25
6.4.1.2 Determination of a Soil Standard for Natural Uranium 6-26

6.4.1.3 Uranium Chemical Toxicity Assessment 6-26
6.4.2 Excavation Control Monitoring 6-30
6.4.3 Surface Soil Cleanup Verification and Sampling Plan 6-30
6.4.4 Quality Assurance 6-30
6.5 Decommissioning Health Physics and Radiation Safety 6-30
6.5.1 Records and Reporting Procedures 6-31
6.6 Financial Assurance 6-31
6.7 References 6-38

List of Tables

Table 6-1: Baseline Groundwater Restoration and Post-Restoration Stability Monitoring Constituents 6-33
Table 6-2: Geologic and Hydrogeologic Analogs 6-34
Table 6-3: Pre-Recovery Water Quality Analogs 6-35
Table 6-4: Annual Intake of Uranium from Ingestion 6-36
Table 6-5: Soil Cleanup Criteria and Goals 6-37

List of Addenda

Addendum 6-A: Restoration Action Plan
Addendum 6-B: RESRAD Report

6 GROUNDWATER QUALITY RESTORATION, SURFACE RECLAMATION, AND FACILITY DECOMMISSIONING

Throughout the life of the proposed Reno Creek Project (Proposed Project), groundwater restoration, reclamation and decommissioning activities will be implemented. The objective of groundwater restoration, surface reclamation, and facility decommissioning is to return the affected environment (e.g., groundwater and land surface) to conditions such that they can be released by NRC for unrestricted use, and are suitable for uses for which they were suitable prior to NRC licensed ISR operations. The methods to achieve this objective for both the affected groundwater and the land surface are described in this section. Further and/or more detailed discussions can be found in:

- Addendum 6-A Restoration Action Plan (RAP) including Financial Assurance tables;
- Addendum 6-B (RESRAD Report);
- Section 2.7 and associated Addendums 2.7-A and 2.7-B in this TR (Hydrology);
- Section 5.7.8 of this TR (Groundwater/Surface Water Monitoring);
- Section 7 of this TR (Environmental Effects);
- Section 3.4 of the ER (Water Resources);
- Section 4 of the ER (Potential Environmental Impacts);
- Section 5.4 of the ER (Mitigation of Potential Water Resource Impacts);
- Section 6 of the ER (Environmental Measurements/Monitoring); and
- Section 8 of the ER (Environmental Consequences).

6.1 Groundwater Restoration

This section presents AUC's proposed method for developing Restoration Target Values (RTV) and AUCs proposed groundwater restoration plan. AUC will conduct groundwater restoration operations concurrently with ISR production operations: as each Production Unit's recovery phase terminates, groundwater restoration will commence, even while other Production Units are still in recovery. The RAP can be reviewed in Addendum 6-A.

The proposed groundwater restoration process will begin following the permanent cessation of lixiviant injection, continuing through active restoration and post-restoration stability monitoring, and concluding with NRC and WDEQ/LQD approval of successful restoration for each Production Unit.

6.1.1 Groundwater Restoration Criteria

Groundwater will be restored consistent with the groundwater protection standards contained in 10 CFR 40, Appendix A, Criterion 5(B)(5) on a constituent-by-constituent basis using BPT and ALARA. Criterion 5(B)(5) requires that the concentration of each constituent not exceed:

(a) The Commission approved baseline conditions or Restoration Target Values (RTV), as described in TR Section 6.1.2, below;

(b) The respective value given in the table in paragraph 5C, Maximum Values for Ground-Water Protection, 10 CFR 40, Appendix A if the constituent is listed in the table and if the background level of the constituent is below the value listed; or

(c) An alternate concentration limit (ACL) established by the Commission.

AUC commits to a primary goal of groundwater restoration to return all constituents to the approved RTV within the range of statistical variability (NUREG 1569, Section 6.1.3 (4)(a)) for each Production Unit (Criterion a, above). However, ISR operations will alter the groundwater geochemistry within the PZA; therefore, it is possible that some constituents will not be returned to RTV. If the primary goal cannot be achieved for some constituents after restoration efforts that are demonstrated to be both in accordance with BPT and ALARA, then AUC will attempt to restore the groundwater constituents which are listed in the table in paragraph 5C to those standards (Criterion b above). If during the application of BPT significant improvement in groundwater quality ceases, and some constituents have not been returned to RTV or the table in paragraph 5C standards, then AUC will submit a license amendment application requesting approval of ACLs pursuant to Criterion 5(B)(6), 10 CFR 40, Appendix A, for these constituents from the NRC (Criterion c above).

AUC recognizes that while prior Class-of-Use is not a standard in the context of Criterion 5(b)(5), NRC has recognized that demonstration of compliance with Wyoming's Class-of-Use standards can be a component of an application for an ACL.

6.1.2 Determination of Conclusion of Groundwater Restoration

Following issuance of its license and as each Production Unit's development time approaches, AUC will calculate Restoration Target Values (RTV) from baseline groundwater quality data collected for each Production Unit as described in TR Section 5.7.8 Groundwater/Surface Water Monitoring Program. Calculated RTVs will be used to assess the success of groundwater restoration activities for each Production Unit.

The groundwater baseline water quality data will be determined from data collected from wells completed in the PZA. Baseline water quality constituents from the PZM Wells will be used, on a constituent by constituent basis, to monitor and evaluate restoration activities in returning the affected groundwater back to pre-operational quality as reasonably as practicable.

Specific restoration values will be established prior to uranium recovery in each Production Unit by computing specific restoration values for specific constituents. RTVs will be determined for each Production Unit by processing the analytical results from sampled production wells using geochemical statistical methods for each constituent listed in Table 6-1.

Conclusion of groundwater restoration will be determined after the completion of the stability monitoring period (see Section 6.1.4.4). If no statistically significant increasing trends in restoration values are identified, restoration will be deemed complete. A summary report requesting approval will be submitted along with appropriate groundwater quality data to NRC and WDEQ. When necessary approvals are received from the regulatory agencies, final decommissioning of the Production Unit will commence.

6.1.2.1 Determination of Groundwater Restoration Target Values

Following receipt of its license and as the development time for each Production Unit approaches, Restoration Target Values (RTV) representative of baseline water quality will be established for each Production Unit after sampling representative PZA production wells. AUC will measure baseline water quality by collecting groundwater samples relevant to each Production Unit when its development schedule occurs as described in Section 5.7.8. Baseline water quality will be established for each Production Unit by combining the analytical results from sampled production wells within the Production Unit and calculating a geostatistical result in accordance with applicable NRC, WDEQ, and EPA regulations and standards. The RTV list of constituents will be developed in accordance with the statistical analysis described below.

AUC proposes to adapt the statistical principles described in the Statistical Analysis of Groundwater Monitoring Data at RCRA Facilities, Unified Guidance, March 2009, EPA 530/R-09-007 (Unified Guidance). The principles in the Unified Guidance are embodied in the EPA sourced ProUCL software, plus as required, WDEQ regulations and guidance that is consistent with ProUCL. AUC will use the Unified Guidance to evaluate baseline groundwater geochemical data to identify the constituents to be used for RTVs and then establish RTVs for each Production Unit. Data will describe in detail distribution, spatial, and temporal dependencies for each constituent. Where appropriate, groups of wells may be subdivided to assure representativeness of populations. These statistical data will then

be used to calculate appropriate RTVs for each included constituent in each Production Unit.

The first step in the application of the Unified Guidance is to validate analytical data, using a series of SOPs for both sampling and laboratory analytical procedures, developed and available for inspection by NRC after license issuance. These SOPs will be developed and implemented prior to commencement of operations. Groundwater quality data that passes the data validation will be incorporated into AUC's monitoring database.

The ProUCL process includes a statistically sound treatment of outliers and non-detects. Outliers, which are anomalously high or low values relative to the other values for each constituent, will be determined using ProUCL and procedures described in WDEQ/LQD Guideline 4, Attachment 1, which has been determined to be consistent with the principles included in ProUCL and the Unified Guidance. Sample results that are determined to be true outliers will be removed from the statistical analysis that is used to calculate RTVs.

The treatment of non-detects will also be accomplished using the principles outlined in the Unified Guidance, and will be used to populate the RTV constituent listing.

6.1.3 Groundwater Restoration Monitoring

During groundwater restoration activities, lixiviant injection is discontinued and a greater bleed volume is taken while improving the groundwater quality back to RTV standards. As a result, the possibility of an excursion is greatly reduced; therefore the monitor ring wells (RM Wells) and the overlying aquifer monitor wells (OM-Wells) sampling frequencies will be decreased from once every two weeks to once every 60 days during restoration. Wells will be analyzed for excursion parameters chloride, total alkalinity and conductivity. Water levels will also be measured at these wells prior to sampling.

In the event that unforeseen conditions such as inclement weather, mechanical failure, or other factors that may result in placing an employee at risk or potentially damaging the surrounding environment occur, notification to NRC and the WDEQ will be made if any of the wells cannot be monitored within 65 days of the last sampling event.

In the event that AUC employs the use of reductants to augment the restoration process, Production Units will be monitored no differently than would be normal during the application of other restoration techniques. During groundwater restoration activities, AUC will sample the PZM Wells, which were used to determine baseline groundwater quality, once per month to provide adequate information to address the success of groundwater restoration, effectiveness and efficiency of the restoration techniques being used, and any further restoration that may be needed in specific areas of the PZA.

Samples collected will be analyzed for all of the constituents found in Table 6-1 at the beginning of restoration and then all or some of the constituents as determined by the statistical analysis in accordance with the Unified Guidance and groundwater restoration progress.

In addition to sampling the PZM Wells, AUC will sample the recovery wells in patterns undergoing active groundwater restoration every two weeks for a limited set of constituents. AUC will select constituents to monitor that will indicate how groundwater restoration is progressing and when groundwater restoration has been completed in these patterns. Monitored constituents will be based on the groundwater quality at the conclusion of ISR operations. By sampling these wells at this frequency AUC will be able to closely monitor groundwater restoration progress on a pattern by pattern basis and thereby optimize its groundwater restoration program.

AUC commits to continue excursion monitoring of the RM Wells following the stability monitoring phase until final approval of groundwater restoration is received from the NRC for each Production Unit. AUC proposes decreasing the sampling frequencies to once every 180 days while NRC staff and WDEQ evaluate the groundwater restoration report. Wells will be analyzed for the excursion parameters chloride, total alkalinity and conductivity. Water levels will also be measured at these wells prior to sampling.

6.1.4 Groundwater Restoration Methods

AUC's proposed groundwater restoration program is based on the successes and lessons learned from current ISR operations. The basic methods are described in NUREG-1910, *Generic Environmental Impact Statement for In-Situ Leach Uranium Milling Facilities* and have proven effective at restoring groundwater in both pilot and commercial uranium recovery operations, including an earlier demonstration operation at the Reno Creek site. Rocky Mountain Energy's Restoration Report for Pattern 2 is included as Addendum 1-A in this TR.

AUCs proposed groundwater restoration program will be conducted in two phases:

1) Active groundwater restoration; and
2) Stability monitoring.

The active groundwater restoration phase will include the following methods:

- Groundwater Transfer;
- Groundwater Sweep (targeted or selective); and
- Reverse Osmosis Treatment with Permeate Injection and Reductant Addition.

Based on modeling results in TR Section 2.7, ISR operations in the partially saturated portion of the PZA will experience some slightly different hydraulic behavior. For example, both production and restoration can result in development of generally steeper but smaller area drawdown cones around the recovery wells and a somewhat greater mounding of groundwater in a small area near injection wells. Drawdown and mounding around these wells will have limited areal extent; therefore, the effect will have a tendency to be localized around these wells.

Data collected during the pump tests conducted in the partially saturated PZA indicate that aquifer recovery occurs rapidly once a recovery well is shut in. In order to provide efficient sweep of restoration fluids, AUC will use "pulsing" of recovery wells by cycling them on and off. AUC will also “flip” recovery wells with injection wells within individual well patterns. Flipping of the wells will effectively address the drawdown and mounding effects created during uranium recovery operations.

The application of each method and sequencing will be determined by AUC based on operating experience, restoration treatment system capacity, and wastewater disposal capacity. Not all stages of groundwater restoration will be used if deemed unnecessary by AUC. AUC will combine these methods selectively to improve groundwater restoration efficiency and decrease the time to restore a given Production Unit. As an example, since a Production Unit will be made up of several wellfields, the groundwater transfer method could be applied to one wellfield while the reverse osmosis (RO) method is applied to a second wellfield within a given Production Unit, and targeted groundwater sweep could be applied throughout the Production Unit.

AUC will install the infrastructure necessary to accomplish groundwater restoration concurrently with uranium recovery operations. This means AUC will have its restoration RO units installed and operational prior to the cessation of uranium recovery from the first Production Unit in operation. To ensure that a Production Unit will be able to begin groundwater restoration, additional restoration pipelines will be installed along with production pipelines as necessary. Pumps used for production will remain in the wells for use in restoration.

A description of each groundwater restoration method is presented below.

6.1.4.1 Groundwater Transfer

Groundwater transfer involves moving groundwater between one Production Unit in groundwater restoration and another Production Unit or wellfield in the beginning phase of ISR operations, or moving water between two areas within a single Production Unit that are in different stages of restoration (NUREG-1910). The direct transfer of groundwater will lower the TDS in the Production Unit being restored by displacing

groundwater affected by recovery operations with baseline quality groundwater. Because groundwater is transferred from one Production Unit to another, groundwater transfer typically will not create additional wastewater.

Prior to injection, groundwater recovered during groundwater transfer may be passed through ion exchange columns and/or filters for additional ISR operations. AUC will decide when the use of groundwater transfer is appropriate.

6.1.4.2 Groundwater Sweep

Groundwater sweep may be used as a stand-alone process or in conjunction with the other two processes. During groundwater sweep, groundwater is pumped without injection from the PZA causing an influx of groundwater from beyond the perimeter of the uranium recovery area that sweeps the portion of the aquifer affected by any flare of lixiviant outside of the uranium recovery area. The main goal for using groundwater sweep will be to recover any flared lixiviant outside of the uranium recovery area by using targeted groundwater sweep around the perimeter of a Production Unit at any time during groundwater restoration. The purpose of targeting groundwater sweep is to minimize the consumptive use of groundwater since WDEQ/LQD has determined that groundwater sweep with direct disposal of produced water is not considered BPT due to excessive consumption of groundwater and resultant impacts to groundwater resources (LCI 2009).

Groundwater produced from groundwater sweep will be processed in the CPP by ion exchange and the secondary RO unit. Permeate generated from groundwater sweep will be re-injected into a wellfield undergoing RO treatment with permeate injection. Re-injection of permeate generated by this process will decrease the amount of bleed removed by the RO method (as described below) by increasing the amount of permeate injected. This will enhance groundwater restoration and will limit the potential interference by groundwater restoration with nearby, ongoing uranium recovery operations.

6.1.4.3 Reverse Osmosis Treatment with Permeate Injection and Reductant Addition

For this method of groundwater restoration, groundwater will be pumped from one or more Production Units to the CPP for processing by pressurized down-flow IX columns reserved for restoration and RO treatment. This method may be used in conjunction with groundwater transfer or groundwater sweep. RO is a high-pressure filtration process that reduces contaminants in the affected groundwater, by producing a clean permeate and a rejected brine wastewater. Clean permeate water will be re-injected to flush contaminants from the PZA affected by uranium recovery while the reject brine will be sent to a

secondary RO unit for further treatment. RO passes a high percentage of water through the membranes, leaving 60 to 90 percent of the dissolved salts in the brine water.

The primary use of an RO unit through the injection of permeate is to reduce total dissolved solids (TDS) in the affected groundwater. However, additional benefits of RO treatment include:

- A decrease in the quantity of water that must be removed from the aquifer to meet RTV limits;
- Concentration of the dissolved contaminates in a smaller volume of brine to facilitate wastewater disposal; and
- Enhancement of the exchange of ions from the formation due to the large difference in ion concentration.

As discussed in Section 3.1.7 of the TR, AUC will use two stages of RO treatment (primary and secondary), during groundwater restoration to maximize permeate and minimize brine production. Interference from groundwater restoration with ongoing uranium recovery operations will be kept to a minimum by maximizing the quantity of permeate re-injected into wellfields undergoing RO treatment and will accelerate clean-up of affected groundwater.

AUC will use a chemical reductant such as sulfide and/or sulfite compounds during the active phase of groundwater restoration to lower the oxidation-reduction potential (Eh) in the PZA. Lowering of the Eh decreases solubility of trace metal elements that were oxidized and mobilized during uranium recovery operations. Dissolved metals such as arsenic, molybdenum, selenium, vanadium and uranium which cannot be fully removed by IX columns or RO treatment alone can be precipitated out of the groundwater by the addition of a reductant. AUC will add the reductant to the RO permeate prior to re-injection into the PZA. AUC will implement safety procedures for the handling and use of a chemical reductant such as sodium sulfide as discussed in Section 4.12.1 of the ER.

6.1.4.4 Alternate Groundwater Restoration Method

AUC recognizes that bio-remediation represents a potentially viable alternative to chemical reductants for decreasing the concentration of trace metals such as vanadium, selenium and arsenic during groundwater restoration. At this time, AUC does not have the essential site specific information to determine if bio-remediation will succeed at the Proposed Project. AUC will investigate through experimentation and bench scale testing the possibility of implementing bio-remediation as a groundwater restoration method post license. AUC proposes to employ the SERP process before beginning any field tests associated with bio-remediation.

6.1.5 Restoration Stability Monitoring

Prior to initiating the stability monitoring phase of restoration, AUC will apply the principles described in the Unified Guidance document to determine if the NRC's primary groundwater restoration goals have been met; i.e. all constituents of concern have been returned to baseline or meet the MCL criteria laid out in the table in paragraph 5C, Maximum Values for Ground-Water Protection, 10 CFR 40, Appendix A.

In the event that AUC completes restoration efforts that are demonstrated to be in accordance with BPT and ALARA and determines that one or more constituents have not been returned to background/MCL restoration standards, AUC will submit a license amendment application requesting approval of Alternate Concentration Limits (ACL) for those specific constituents under 10 CFR Part 40 Appendix A Criterion 5B(6).

AUC will initiate the stability monitoring phase to monitor constituents for statistically significant increasing trends in concentration subsequent to groundwater restoration, in accordance with the principles laid out in the Unified Guidance, and in comparison to the RTVs previously established. The following sections describe the proposed stability monitoring phase, including monitoring, evaluating stability based on monitoring results, corrective actions to address constituents with increasing trends, hot spots, and reporting.

<u>Wells to Be Monitored</u>

During the Stability phase of groundwater restoration AUC will sample the same wells (PZM Wells) used for baseline groundwater characterization of each Production Unit.

Monitor ring wells (RM Wells) will also be sampled during the Stability phase of groundwater restoration at the frequency discussed below.

<u>Sampling Frequency and Duration</u>

AUC proposes to perform four rounds of stability monitoring sampling of the PZM Wells over a nine month period. This includes an initial sampling event at the end of active groundwater restoration, followed by additional rounds of sampling approximately three months apart. This will provide four samples over the nine month period and will cover a span of four quarters of one year.

If necessary, AUC will continue stability monitoring until four consecutive quarters of data indicate that constituent concentrations of concern do not demonstrate any statistically significant increasing trends.

Since the PZM Wells will be sampled, the sampling density which was discussed in Section 5.7.8 of this TR will be one sample (well) per four acres. AUC will continue to sample the RM Wells, once every 60 days during the Stability stage of restoration.

Monitored Constituents

The samples collected from the PZM Wells will be analyzed for all of the constituents determined by the Unified Guidance process for developing the approved RTVs as described above in Section 6.1.2.1. The constituent list will be consistent with the Unified Guidance and with the intentions of NUREG-1569, Table 2.7.3-1, and WDEQ/LQD Guideline 8, Appendix 1, also presented in Table 6-1.

RM-Well samples will be analyzed for the excursion parameters chloride, total alkalinity and conductivity and the static water level will be recorded at each monitoring well during the stability stage.

Stability monitoring results will be evaluated in accordance with the principles laid out in the Unified Guidance, and in comparison to the RTVs previously established to determine whether there are any statistically significant trends in monitored constituents. The method as described in Section 6.1.2.1 of this TR will examine the data collected on a constituent by constituent basis over the duration of stability phase of restoration. If the statistical evaluation of the data indicates a statistically significant increasing trend in any constituent of concern, then AUC will extend the stability phase beyond the original nine month period and will continue to sample PZM and RM Wells on the same schedule as listed above.

Hot Spots

Criteria used to determine whether further action is required include:

1. If a constituent exhibits a statistically significant increasing trend; or
2. If a hot spot is discovered during stability monitoring.

Hot spots, or wells with statistically significant elevated concentrations of dissolved constituents, will be identified using the ProUCL procedures in accordance with the Unified Guidance.

Hotspots often occur in low permeability areas with less groundwater flux than the surrounding aquifer. If AUC identifies either of these occurrences during stability monitoring, additional evaluation will be conducted to determine the potential impact on the water quality outside of the exempted aquifer. This analysis could include extended stability monitoring or fate and transport modeling. If the evaluation reveals that groundwater outside of the exempted aquifer could potentially be affected, AUC will

determine whether a return to a previous stage of active restoration will be required to resolve the issue. The active restoration process and duration will depend on the constituent and its concentration.

Final Groundwater Restoration Report

Once the results of the statistical analyses of the restoration stability stage data indicates that the PZA groundwater has been restored and shows no statistically significant increasing trend in any constituent of concern as committed to by AUC in Section 6.1.1 of this TR, a final restoration report will be issued to the NRC and WDEQ/LQD for regulatory approval. The report will include the results of all stability monitoring, statistical and hot spot analyses, and the results of any fate and transport modeling to assess potential impacts outside of the exempted aquifer. Following NRC and WDEQ/LQD concurrence that a Production Unit has been restored, plugging and abandonment of wells will occur as discussed in Section 6.1.10 and final reclamation will be performed as described in Section 6.2. The Production Unit will then be available for release for unrestricted use.

6.1.5.1 Estimate of Treated Pore Volumes

AUC estimates that seven pore volumes of active groundwater restoration will be required to reach the restoration goal stated in Section 6.1.1. AUC acknowledges that this pore volume estimate is low compared to the reported number of pore volumes required from some ISR operations whose wellfield restoration operations have been approved by the NRC in the PRB. Uranium One's Irigaray ISR project, which is in a similar geological setting as the Proposed Project, reported the required pore volumes for restoration of its nine Production Units ranged from 9.5 to 18.4 with an average of 14.6. Power Resources (PRI) reported that the number of pore volumes for its A-Wellfield at the Highland Uranium Project was 15.

However, it has been determined that these restoration efforts required a greater number of pore volumes due to lack of in-place infrastructure at the start of restoration, and poor management and execution of restoration operations. As an example, PRI began groundwater sweep in the A-Wellfield in July of 1991, but the RO unit was not operational until June of 1994. This delayed startup of groundwater treatment with the RO unit increased the number of pore volumes of groundwater sweep. Also discussed in the PRI A-Wellfield Restoration Report, is that there was a lack of total confinement between the A-Wellfield and the overlying Mine Unit B, which created a situation which increased the number of RO treatment pore volumes needed to achieve restoration success.

AUC will minimize pore volume replacement by having the RO units operational before the start of restoration operations, and will monitor the progress of RO treatment on a pattern by pattern basis to provide a more efficient management of restoration activities. RO treatment will end once restoration is achieved or water quality has stabilized in these patterns. Based on the results of the four pump tests discussed in Section 2.7.2 that indicate the PZA has adequate over- and underlying aquitards, AUC does not anticipate the same problem that PRI experienced between the A-Wellfield and Mine Unit B.

AUC believes that seven pore volumes of active restoration will meet the required goals based on the fact that 6.6 pore volumes were required for restoration of the Pattern 2 ISR pilot project performed within the Proposed Project boundary. Further discussion of the Pattern 2 pilot project performed within the proposed boundary is presented in Section 6.1.7. Additionally, seven pore volumes to achieve the restoration goal is consistent with the recently approved NRC license for The Nichols Ranch ISR Project (Safety Evaluation Report for the Nichols Ranch In Situ Recovery Project in Johnson and Campbell Counties, Wyoming Materials License No. SUA-1597).

6.1.6 Restoration Schedule

AUC commits to begin restoration immediately following uranium recovery operations in Production Units along with close monitoring and groundwater transfer to improve restoration efficiency. AUC also expects to reduce the consumptive use of groundwater with these measures and to expedite restoration by having appropriate infrastructure in place prior to the start of restoration operations. Examples of in-place infrastructure include:

- 1,000 gpm operational RO units prior to the start of restoration;
- Dedicated pipelines for the exclusive use of groundwater restoration will be installed so that restoration is not delayed until uranium recovery operations are completed in other Production Units where required;
- In-place production pumps, monitoring, and instrumentation/control equipment will be utilized to facilitate restoration when uranium recovery is complete in specific Production Units; and
- Having wastewater disposal capacity in-place to handle effluent generated from restoration processes.

During restoration AUC will track performance using restoration field data and if the data dictates, AUC commits to revising the proposed number of pore volumes and accompanying financial assurance needed for restoration success as discussed in Section 6.6 and adjusting financial assurance estimates as appropriate.

AUC expects the combination of active restoration, stability monitoring and surface reclamation and decommissioning of the wellfields may exceed 24 months. Therefore, in accordance with the timelines in decommissioning regulations of 10 CFR 40.42, NRC will be notified and AUC hereby requests approval for an alternate schedule, as allowed under 10 CFR 40.42(i), for each Production Unit.

TR Figure 1-3 shows AUCs proposed production, restoration and decommissioning schedule for the Proposed Project. Addendum 1-A of this TR includes the Restoration Action Report of 1982 from the historical RME site.

6.1.7 Effectiveness of Groundwater Restoration Methods

Monitor wells that were used to establish baseline water quality in the PZA for each Production Unit prior to the start of ISR operations will be the same wells used to monitor groundwater restoration progress.

Groundwater restoration methods described in this application have been successfully used at other ISR operations in Wyoming's PRB. ISR operations that have utilized the proposed restoration techniques presented in this application have obtained regulatory approval for groundwater restoration. Several of the successful groundwater restoration operations have been located on or near the proposed Reno Creek Project and have used the proposed restoration methods in similar formations with very similar operational techniques. The following information details the success of three ISR operations that have used the restoration methods proposed by AUC and are located within the PRB.

6.1.7.1 Reno Creek Project

The Reno Creek Project was an R&D ISR project operated by RME located within the Proposed Project boundary. In October of 1980, a sodium carbonate/bicarbonate lixiviant was used to extract uranium from one wellfield, Pattern 2. Hydrogen peroxide was used as the oxidant. There was also a demonstration wellfield that used a sulfuric acid lixiviant for uranium recovery, Pattern 1. However since an acid lixiviant was used Pattern 1 is not analogous to the restoration at the Proposed Project, which will use a bicarbonate based lixiviant.

Pattern 2 was completed in the partially saturated portion of the PZA proposed for uranium recovery by AUC at the Proposed Project. The water level in Pattern 2 was approximately 12 feet below the top of the aquifer.

Recovery at Pattern 2 was started on October 7, 1980 and continued through December 21, 1980. Then recirculation of fluid was initiated after injection of refortified lixiviant

ceased, and continued until February 22, 1981. Groundwater restoration followed and continued until April 16, 1981, constituting a total of 6.6 pore volumes. Techniques used during groundwater restoration included pumping and circulating the wellfield liquids back through an IX column loaded with a weak acid resin to remove divalent cations from the circulated wellfield lixiviant. This process continued for a one month period of time and was then followed by groundwater sweep. At the close of the groundwater restoration program, all groundwater constituents, except uranium, were restored to levels below or consistent with baseline ranges. Uranium was reduced to less than five parts per million which was below the standard for drinking water in Wyoming at that time. After restoration and stabilization data were evaluated thoroughly by the WDEQ and NRC, both agencies concluded that the goal of restoring the groundwater to pre-operational baseline conditions was achieved for all parameters except uranium, although the uranium met the WDEQ-WQD pre-mining Class of Use standards. NRC's letter to RME dated June 1983, states that restoration of Pattern 2 was restored to a level that would support an application for a commercial scale license. A second letter from WDEQ/LQD dated May 4, 1983 states that restoration met applicable use classification standards.

A report titled, "Rocky Mountain Energy, Reno Creek Pattern 2 Restoration Report", which contains two separate reports and regulatory correspondence, is attached in Addendum 1-A of this document for further information on the Reno Creek Project and the restoration of the partially saturated Pattern 2. This report also includes correspondence from the NRC and WDEQ concerning groundwater restoration of Pattern 2.

6.1.7.2 Irigaray Uranium Project

The Irigaray/Christensen Ranch Uranium Project operated by COGEMA Mining, Inc. has received both WDEQ and NRC approval for groundwater restoration for Wellfields 1 through 9 at Irigaray, following commercial operation of the wellfields and groundwater restoration. When restoration of the wellfields was completed, 27 of the 29 constituents were restored to their restoration target values. Only bicarbonate and manganese did not meet their restoration target value, but the two constituents did meet the WDEQ-WQD pre-operational class of use criteria. Based on these results, the WDEQ determined that the groundwater had been returned to its pre-mining class of use and that restoration was complete.

In 2006, the NRC agreed with the DEQ determination that restoration was complete and that Wellfields 1 through 9 had been restored in accordance with the applicable regulatory requirements.

6.1.7.3 Smith Ranch-Highland Uranium Project

The Smith Ranch-Highland Uranium Project currently operated by Cameco Resources, Inc. (formerly PRI) has had an R&D and a commercial wellfield approved as restored, by both the NRC and WDEQ. In 2004 the A-Wellfield was approved by both agencies as restored, after commercial operation, to applicable regulatory standards. Not all of the parameters were returned to baseline conditions, but the groundwater quality was consistent with the WDEQ/WQD pre-operational class of use.

During the active phase of groundwater restoration of the A-Wellfield, PRI employed groundwater sweep and RO treatment with permeate injection, and used a sulfide (H_2S) as a reducing agent. These are some of the same methods proposed by AUC for groundwater restoration at the Proposed Project.

In 1987, the NRC confirmed the restoration of the Q-Sand Project. Although one well exhibited uranium and nitrate levels above the restoration target values, the wellfield water quality averages, as a whole, were below the target values.

Tables 6-2 and 6-3 present information confirming that the Irigaray and Smith Ranch-Highland Projects have similar hydrologic and baseline groundwater characteristics as the proposed Reno Creek Project, and therefore can be used as restoration analogs.

6.1.8 Environmental Effects of Groundwater Restoration

Groundwater restoration, specifically other ISR operations in the PRB, has proven successful utilizing techniques discussed in the application. AUC expects that groundwater restoration at the Proposed Project will also be successful, utilizing the proven techniques that have been discussed. The goal of the groundwater restoration is to restore the affected groundwater consistent with the RTVs and Criterion 5 requirements. However, regardless of the restored groundwater quality in the PZA, the groundwater adjacent to the Production Units must be fully protected outside the aquifer exemption boundary, to applicable EPA Maximum Contaminant Levels (40 CFR 141 as amended July 1, 2001). If during groundwater restoration, a constituent cannot, using BPT and ALARA, be restored consistent with its RTV within the Production Unit, AUC will apply for an ACL and will demonstrate that leaving the constituent at a higher concentration will not be a significant threat to public health and safety, to the environment, now or in the future. With the proven application of the best practicable technology and ALARA for groundwater restoration, and the in-place regulatory requirements of NRC and the WDEQ , there will be no adverse impact on the water quality of groundwater in adjacent, non-exempt aquifers (NRC, 2009). Effects of groundwater restoration are discussed in more detail for all aspects of the restoration process in Section 4 of the ER. AUC can

conduct both uranium recovery and groundwater restoration effectively and in compliance with NRC requirements.

6.1.9 Well Plugging and Abandonment

Wellfield plugging and surface reclamation will be initiated in a given Production Unit once NRC and the WDEQ concur that AUC has adequately completed groundwater restoration and that groundwater quality is stable. All production and monitor wells will be plugged in accordance with WDEQ/LQD Rules and Regulations, Chapter 11, Section 8(f), unless a well is needed for continued monitoring of another Production Unit, or retention of the well for future use has been requested and approved. The following procedure will be used to plug the wells:

1) All pumps and piping will be removed from wells, when practicable;
2) AUC will plug all wells with a neat cement mixture or a cement/bentonite mixture approved by the WDEQ/LQD Administrator;
3) The cement will be pumped through drill pipe or tremie pipe from the bottom of the well to surface;
4) The casing will be cut off at a minimum of two feet below the ground surface;
5) A cement plug will be set in place above the top of the casing. As required by Chapter 11 a steel plate with the permit number, well identification number, and date of plugging will be placed atop the cement plug of all perimeter monitor ring wells;
6) The area will be backfilled, smoothed, leveled, and revegetated to blend with the natural terrain; and
7) A written well abandonment report will be completed and sent to WSEO with a copy retained on site.

TR Addendum 2.6-B provides a more detailed discussion on the plugging and abandonment of historic and recently drilled boreholes and wells.

6.1.10 Restoration Wastewater Disposal

All of the brine generated by the Proposed Project will be disposed of in up to four Class I deep disposal wells as discussed in Section 4.3.4 of this TR. AUC will minimize the quantity of brine generated during groundwater restoration operations of the Proposed Project primarily by employing two stages of RO. That is, once groundwater restoration activities begin, the brine from the first stage of the production and restoration ROs will be further treated in a second stage. This will reduce the brine quantity by an estimated

40 to 50 percent compared to single-phase RO treatment. AUC will further reduce the brine quantity by employing limited, targeted groundwater sweep.

AUC plans to install up to four deep disposal wells (EPA UIC Class I non-hazardous wells) at the proposed Reno Creek Project as the primary liquid 11e.(2) byproduct disposal method. AUC believes that permanent deep disposal is preferable to evaporation in ponds for the following reasons:

1) Liquid 11e.(2) byproduct disposed through deep wells is sequestered from human contact, eliminating risk to human health;
2) Large ponds have the potential for leaks and impacts to the environment, and a much larger volume of solid and liquid 11e.(2) byproduct is created through use of ponds.

All compatible liquid 11e.(2) byproduct material at the proposed CPP will be disposed in the planned deep disposal wells. Further discussion of the liquid 11e.(2) byproduct material disposal alternatives considered by AUC is contained in Section 8.1.7 of this TR.

6.2 Plans and Schedules for Reclaiming Disturbed Lands

Upon completion of licensed ISR operations at the Proposed Project, all lands disturbed by ISR production activities will be reclaimed to the extent necessary so that they can be released for unrestricted use. AUC will not begin final site decommissioning until groundwater restoration has been approved by NRC and WDEQ for all Production Units. As stated in NUREG-1569, Section 6.2.1, AUC intends to restore topography and vegetation to a state that is comparable to pre-operational conditions. Additionally, in accordance with NUREG-1569, Section 6.2.3 (Criterion 7), AUC commits to providing detailed reclamation plans for land (soil) to NRC for review and approval at least 12 months before the planned commencement of final site reclamation.

AUC will submit a standard Production Unit decommissioning plan specific to PU1 for approval at least 12 months prior to the completion of groundwater restoration in accordance with NRC requirements. Decommissioning will not begin in a Production Unit until final approval of groundwater restoration has been received from the NRC and the WDEQ. AUC will apply this standard Production Unit decommissioning plan (absent Production Unit-specific requirements) through its SERP process to implement specific reclamation of all subsequent Production Units. This will allow for more efficient surface reclamation across the Proposed Project, and will return surface areas back to their unrestricted uses in a timely manner.

Prior to reclamation, AUC will identify the disposition of all non-radiological components and hazardous materials, including all structures and equipment. Those that

may be decontaminated to regulatory standards will be demolished, and disposed of at a permitted nonhazardous materials disposal facility (e.g., a local landfill). Contaminated structures and equipment will be dismantled and transported off-site to a licensed facility for disposal as solid 11e.(2) byproduct material, in accordance with 10 CFR Part 40, Appendix A, Criterion 2. Salvaged equipment may also be transferred to another AUC project or NRC licensee. Non-11e.(2) regulated materials including uncontaminated materials and equipment and septic system materials will be disposed of in an approved sanitary landfill, compliant with the rules and regulations of WDEQ/SHWD.

Reclaimed lands will be returned to their pre-operational land uses. Those uses include livestock grazing and wildlife habitat, unless an alternative use is justified and approved by the state and the landowner (e.g., the rancher desires to retain roads or buildings, subject to a written agreement with each landowner). The objective of the surface reclamation effort is to return disturbed lands to a use similar to the use that existed prior to ISR operations. Final reclamation will be evaluated using baseline soil, vegetation, radiological data and others as guidance. This section provides a general description of site decommissioning and surface reclamation plans. The following lists general decommissioning activities:

- Plugging and abandonment of all wells per WDEQ/LQD requirements as detailed in Section 6.1.9;
- Determination of appropriate cleanup criteria for structures (Section 6.2.1) and soils (Section 6.4);
- Radiological surveys and sampling of all facilities, process related equipment and materials on site to determine their degree of contamination, and to identify the potential for personnel exposure during decommissioning;
- Removal from the site of all contaminated equipment and materials to an approved licensed facility for disposal or reuse, or relocation to an operational portion of the ISR operation as discussed in Section 6.2.1;
- Decontamination of items to be released for unrestricted use, to levels consistent with the requirements of the NRC;
- Surveys of excavated areas for contamination, and removal of contaminated materials to a licensed disposal facility;
- Performance of final site soil radiation and radionuclide soil concentration surveys (confirmation of cleanup);
- Backfilling and re-contouring of all disturbed areas;
- Re-application of stockpiled topsoil to disturbed areas; and
- Establishment of permanent vegetation on all disturbed areas.

Pre-reclamation radiological surveys, as discussed in Section 2.9 of this TR, will be conducted in a manner consistent with NUREG-1569 Acceptance Criterion 6.2.3(2) for comparison to the baseline radiological surveys. This will allow the data to be compared for identification of potentially contaminated areas and to identify candidate areas for cleanup operations as stated in NUREG-1569 Acceptance Criterion 6.2.3(3). For example, a comprehensive gamma scan of the site will be performed, including correlation to soil samples to develop site wide estimates of soil ^{226}Ra concentrations. In cases of identified contamination (as defined in 10 CFR 40, Appendix A, Criterion 6[6]) at the soil surface, subsurface soil sampling will also be conducted to determine the vertical extent of contamination that would require remediation under then-applicable soil cleanup criteria (e.g.: 10 CFR 40, Appendix A, Criterion 6[6]).

Final status surveys after any remediation activities will also be conducted, allowing results to be compared to pre-operational baseline survey data including background data.

As previously noted, at least 12 months before the planned commencement of reclamation and final decommissioning, AUC will submit a detailed Decommissioning Plan to the NRC for review and approval. The following sections will be used as guidelines by AUC during development of the Plan.

6.2.1 Surface Disturbance

Majority of surface disturbances related to ISR operations will be the result of associated structures, including the CPP, facility buildings, and header house buildings. Disturbances associated with the CPP and facility buildings will be small when compared to the total area of the Proposed Project.

Initially, topsoil will be stripped from these areas prior to construction, for reuse later during reclamation. Minor surface disturbances will occur during installation of the wellfields, including well drilling, pipeline installations and access road construction. These disturbances will be relatively small or will have short-term minor impacts. Areas associated with drilling and pipeline installation will be reclaimed and reseeded after completion of construction as soon as weather permits. Upon completion of reclamation in a given area, AUC will reestablish normal vegetation within two years, in accordance with WDEQ/LQD guidelines, subject to LQD and landowner approval

Surface reclamation in the Production Units will proceed in accordance with the development sequence and the ISR/reclamation timetable. Final surface reclamation of each Production Unit will be completed after approval of groundwater restoration stability in accordance with NUREG-1569, Section 6.1, and the completion of well abandonment activities. Surface work will be accomplished as needed to blend any disturbed areas into the contours of the surrounding landscape.

Production Unit decommissioning will consist of the following steps:

1) Removal of surface equipment which primarily consists of the injection and production feed lines, header houses, electrical and control distribution systems, well boxes, and wellhead equipment. Production well infrastructure such as valves, meters or control fixtures will be salvaged to the extent possible. All piping, equipment, buildings, and wellhead equipment will be surveyed for contamination prior to release in accordance with the NRC guidelines for free release;
2) Removal of buried wellfield piping;
3) Conduct a radiological (gamma) survey over the entire wellfield area to identify any contaminated earthen materials requiring removal and disposal;
4) Soil remedial action and disposal as needed;
5) Re-contouring of the wellfield area, if necessary.

Equipment that has not been in contact with lixiviant is expected to meet release limits, which will allow disposal at an unrestricted area landfill. Contaminated materials will be decontaminated and released for unrestricted use, or will be disposed of in a licensed facility.

An ongoing post license process during ISR operations is delineation drilling, which results in the production of drill cuttings. Drill cuttings from the ore bodies, which contain radioactive material, are classified as Technologically Enhanced Naturally Occurring Radioactive Material (TENORM). TENORM drill cuttings will be buried in the drill pits. This method is discussed in a recent EPA report (EPA, 2007) which states "these wastes are typically deposited in pits on-site, which are subsequently buried during reclamation. Some slight radioactivity may occur in accumulated solids in the pit bottoms". As discussed in Section 3, the Proposed Project ore body has an average grade estimated at 0.065 percent. The relatively small volume of low concentration TENORM drill cuttings deposited at the bottom of the drill pits will not present a hazard. Additionally, TENORM material is not subject to the soil clean-up criteria from 10 CFR Part 40 Appendix A. It should be noted as an example that the project's baseline gamma survey covered the Reno Creek historical drilling area, and found almost no radiation evidence of cuttings produced during the drilling of some 1,100 boreholes.

Production Unit decommissioning will be an independent ongoing operation throughout the ISR development sequence. Once groundwater restoration at a Production Unit in a particular location has been approved by the NRC and WDEQ it will be scheduled for decommissioning and surface reclamation.

6.2.2 Topsoil Handling and Replacement

Scrapers and other equipment will be used for topsoil salvage operations. Topsoil will be salvaged from areas such as permanent storage sites, chemical storage sites, building sites, and main and graveled access roads in accordance with WDEQ/LQD requirements. During final wellfield construction activities, the topsoil salvage locations will be determined using wellfield pattern emplacement and access road location.

As described in Section 2.6, topsoil thickness varies within the Proposed Project area from non-existent to several feet in depth. Therefore, topsoil stripping depths will be dependent on the characteristics of the area being stripped.

In order to minimize the effects of wind and water erosion, the salvaged topsoil will be located away from drainage channels, on the leeward side of hills, and will be seeded as soon as possible after construction with nurse and final permanent seed mixes (see below). For a list of the seed mixes see Table 6-1 in Section 6 of the ER. For cases where there are very large stockpiles, berms may be used to control sediment runoff caused by raindrop impact, and to assist in establishment of vegetation. In accordance with WDEQ/LQD requirements, all topsoil stockpiles will be identified with highly visible signs with the designation "Topsoil".

During mud pit excavation associated with well construction, exploration drilling and delineation drilling activities, topsoil will be separated from subsoil with a backhoe. When use of the mud pit is complete, all subsoil will be replaced and topsoil will be re-applied. Mud pits only remain open a short time, usually less than 30 days. Similarly, during pipeline construction, topsoil will be stored separately from subsoil and will be replaced on top of the subsoil after the pipeline ditch is backfilled.

6.2.3 Final Contouring

Due to the nature of ISR operations, no construction activities are planned that will require major re-contouring. Due to the fact that there will be no significant changes to the topography of the land during operations, a final contour map will not be necessary, and the post-ISR contours will reflect the pre-operation contours. All locations where a surface disturbance has occurred will be contoured to blend with the natural terrain and will be consistent with post-ISR land uses of livestock grazing and wildlife habitat.

6.2.4 Re-Vegetation Practices

Re-vegetation practices will be conducted in accordance with WDEQ/LQD regulations and the WDEQ Permit to Mine, and all seed mixes will be approved by the WDEQ/LQD.

During ISR operations the topsoil stockpiles, and as much as practicable of the disturbed wellfield areas will be seeded to establish a vegetative cover to minimize wind and water erosion. After topsoil application but prior to final reclamation, an area may be seeded with a nurse crop such as winter wheat to establish a standing vegetative cover. The permanent seed mix would later be seeded into the nurse crop stubble the following year. Seeding rates will be in accordance with the manufacturers' recommendation for pure live seed per acre. A long term temporary seed mix may be used in the wellfields and other areas where the vegetation will be disturbed again prior to final decommissioning and final re-vegetation. Listed in ER Table 6-1 is the proposed permanent seed mixes to be used at the Proposed Project.

The "Extended Reference Area" method as detailed in WDEQ/LQD Guideline No. 2 - Vegetation (March 1986) will be used to determine the success of the permanent re-vegetation for meeting land use and reclamation success standards. This method compares, on a statistical basis, the reclaimed area with adjacent undisturbed areas of the same vegetation type. The Extended Reference Area will be 25 acres or larger, one half the size of the reclaimed area, and located adjacent to the area being assessed.

In order to ensure adequate representation of the undisturbed native vegetation areas and to provide a valid means of assessing the success of permanent re-vegetation, the WDEQ/LQD will be consulted prior to selection of the Extended Reference Areas.

6.3 Procedures for Removing and Disposing of Structures and Equipment

The following discussions will be used as guidelines by AUC for the procedures and activities for decommissioning all Proposed Project structures and equipment in accordance with requirements set forth in 10 CFR Part 40.42.

6.3.1 Preliminary Radiological Surveys and Contamination Control

Prior to CPP decommissioning, a preliminary radiological survey will be conducted to characterize the levels of contamination on structures and equipment and to identify any potential hazards. The survey will support the development of procedures for dealing with such hazards prior to commencement of decommissioning activities. In general, the contamination control program used during ISR operations (as discussed in TR Section 5.7) will be appropriate for use during the decommissioning of structures.

Based on the results of the preliminary radiological surveys, gross decontamination techniques will be employed to remove loose contamination before decommissioning activities proceed. This gross decontamination will generally consist of washing contaminated surfaces with high-pressure water. In areas where contamination is not

readily removed by high-pressure water, a decontamination solution (e.g., dilute acid) may be used; this solution will be disposed of through a deep disposal well.

6.3.2 Removal of Process Buildings and Equipment

It is assumed most of the process equipment within the CPP will be reusable including the building itself. All potentially contaminated materials and equipment will be inventoried and designated either for removal to a new location or other licensed facility, permanent disposal, or decontamination for unrestricted use.

It is AUC's intention to decontaminate, dismantle, and release all ISR project facility buildings for use at future locations, whether by landowners, other ISR facilities, or those of other industries. If the buildings cannot be decontaminated successfully, they will be treated as solid 11e.(2) byproduct material and disposed of off-site at a licensed facility. Concrete foundation pads and footings will be broken up and removed to a solid waste disposal site if uncontaminated, or to a licensed solid 11e.(2) byproduct material disposal facility, if contaminated.

Any non-11e.(2) byproduct materials that are subject to the Resource Conservation and Recovery Act (RCRA) and defined as hazardous wastes will be separated and disposed of offsite at a licensed disposal facility. All non-11e.(2) byproduct materials will be disposed of at a municipal solid waste facility.

6.3.2.1 Building Materials, Equipment and Piping to be Released for Unrestricted Use

Salvageable building materials, equipment, pipe and other materials will be surveyed for alpha and beta/gamma contamination in order to establish that residual contamination is within the limits specified in Section 5.7.6, "Contamination Control Program", of the TR prior to release for unrestricted use.

Decontamination of surfaces will be guided by the ALARA principle to reduce surface contamination to levels as far below the limits as practicable. Interior surfaces where radiological materials could accumulate such as piping, drain lines, duct work, etc. will be sampled/monitored for contamination at accessible locations. Inaccessible surfaces of equipment, and scrap with a reasonable likelihood of contamination, will be presumed contaminated in excess of the release limits, and will be disposed of accordingly.

Non-salvageable contaminated equipment, materials, and dismantled structural sections will be sent to a licensed facility for disposal. In most cases the byproduct material will

be shipped as Low Specific Activity (LSA-I) material, UN2912, pursuant to 49 CFR 173.427.

6.3.2.2 Preparation for Disposal at a Licensed Facility

All openings on contaminated equipment will be plugged or covered before moving from the plant facility within covered transport vehicles. Equipment will only be disassembled sufficiently to allow for safe loading onto the desired mode of transportation. Smaller contaminated items can be placed in roll off containers, barrels or dump trucks for delivery to a licensed facility. All contaminated buried process lines and drain lines will be excavated and removed for shipment to a licensed facility.

6.3.3 Waste Transportation and Disposal

Materials, equipment, and structures that cannot be decontaminated to meet the release criteria will be disposed of off-site at a disposal site licensed by the NRC to receive solid 11e.(2) byproduct material. A detailed list of these potential disposal sites can be found in TR Section 7.3.12. AUC is investigating alternatives for disposal at existing sites licensed to receive solid 11e.(2) byproduct material including Pathfinder Mines, Kennecott Uranium Company, and Denison Mines. An agreement for disposal of solid 11e.(2) byproduct material will be in place before operation of the Proposed Project commences. A disposal agreement will be maintained at a minimum of one licensed disposal facility throughout licensed operations.

Transportation of all contaminated waste materials and equipment from the site to the approved licensed disposal facility or other licensed sites will be handled in accordance with the DOT Hazardous Materials Regulations (49 CFR Part 173) and the NRC transportation regulations (10 CFR Part 71). Detailed tables of potential transportation routes can be found in Section 3.2 of the ER.

6.4 Methodologies for Conducting Post-Reclamation and Decommissioning Radiological Surveys

6.4.1 Cleanup Criteria

Potential radiological contamination in surface soils (e.g., ^{226}Ra, U-nat) will be cleaned up in accordance with the requirements of 10 CFR Part 40, Appendix A, Criterion 6(6). including ALARA and an analysis of potential chemical toxicity of uranium. The proposed limits and ALARA goals for cleanup of soils are summarized in Table 6-5.

On April 12, 1999, the NRC issued a Final Rule (64 FR 17506) that requires the use of the existing soil ^{226}Ra standard to derive a dose criterion for the cleanup of byproduct material. The amendment to Criterion 6(6) of 10 CFR Part 40, Appendix A became effective on June 11, 1999. This "benchmark approach" requires that NRC licensees model site-specific dose from the existing ^{226}Ra standard and then use that dose to determine the allowable quantity of any other radionuclides that would result in a similar dose to the average member of the critical group. These determinations must then be submitted to NRC with the site reclamation plan or included in license applications. This section documents the modeling and assumptions made by AUC to derive a standard for natural uranium in soil for the Proposed Project.

Concurrent with publication of the Final Rule, NRC published draft guidance (64 FR17690) for performing the benchmark dose modeling required to implement the final rule. Final guidance was published as Appendix E to NUREG-1569. This guidance discusses acceptable models and input parameters. This guidance, information from the RESRAD Users Manuals, the Data Collection Handbook to Support Modeling Impacts of Radioactive Material in Soil and site-specific parameters were used in the modeling as discussed in the following sections.

6.4.1.1 Determination of Radium Benchmark Dose

RESRAD Version 6.3 computer code is used to model the proposed Reno Creek site and calculate the annual dose from the current ^{226}Ra cleanup standard. The following supporting documentation for determination of the ^{226}Ra benchmark dose is attached in Addendum 6-B:

- The RESRAD Data Input Basis (Addendum 6-B) provides a summary of the modeling performed with RESRAD and the values that were used for the input parameters. A sensitivity analysis is referenced for parameters important to the major component dose pathways and for which no site specific data was available. Graphs produced using RESRAD that present the results of the sensitivity analysis are also referenced. The results of the referenced sensitivity analysis support the parameters chosen for the Reno Creek analysis; and
- A full printout of the final RESRAD modeling results for the resident farmer scenario with the chosen input values. The printout provides the modeled maximum annual dose for calculated times for the 1,000 year time span and provides a breakdown of the fraction of dose due to each pathway. Selected graphs produced by RESRAD for the Proposed Project analysis are included in this appendix.

The RESRAD-determined maximum dose from ^{226}Ra, contaminated soil at the identified cleanup standard for the Reno Creek residential farmer scenario was 39.5 mrem/yr. The

two major dose pathways were external exposure and plant ingestion (water independent). The 39.5 mrem/yr dose from ^{226}Ra is the level at which the natural uranium radiological end point soil standard will be based, as discussed below.

6.4.1.2 Determination of a Soil Standard for Natural Uranium

RESRAD was used to determine the concentration of natural uranium in soil, distinguishable from background, which would result in a maximum dose of 39.5 mrem/yr. The method involved modeling the dose from a convenient concentration (100 pCi/g) of natural uranium in soil. This dose was compared to the ^{226}Ra benchmark dose, then scaled to arrive at the maximum allowable natural uranium concentration in soil.

Natural uranium consists of three isotopes. By activity, 100 pCi/g U-Nat is 48.9 percent (or pCi/g) ^{234}U, 48.9 percent ^{238}U, and 2.2 percent ^{235}U. The distribution coefficients selected for each radionuclide were primarily RESRAD default values. The input parameters for the RESRAD runs were as provided in Addendum 6-B. At a natural uranium concentration in soil of 100 pCi/g, RESRAD determined a maximum dose of 7.5 mrem/yr at t = 0 years.

To determine the uranium soil standard, a ratio based on the ^{226}Ra results is applied. The uranium soil standard:

39.5 mrem/yr (^{226}Ra benchmark dose), divided by;
7.5 mrem/yr (Unat dose at 100 pCi/g), with that result multiplied by;
100 pCi/g (RESRAD Unat input concentration);
Equals 526 pCi/g Unat

This calculated natural uranium concentration limit, when ^{226}Ra is also present in soil, will be applied to remedial action using the sum of fractions method, to avoid exceeding the calculated allowable dose limit.

6.4.1.3 Uranium Chemical Toxicity Assessment

The chemical toxicity effects from uranium exposure are evaluated by assuming the same exposure scenario as that used for the radiation dose assessment. In the Benchmark Dose assessment for the resident farmer scenario, it was assumed that the diet consisted of 25 percent of the meat, fruits, and vegetables grown at the site. No intake of contaminated food through the aquatic or milk pathways was considered probable. Also, the model showed that the contamination would not affect groundwater quality. Therefore, the same model will be used in assessing the chemical toxicity. The intake from eating meat was shown to be negligible compared to the plant pathway and therefore is not estimated.

The method and parameters for estimating the human intake of uranium from ingestion are taken from NUREG/CR-5512, Vol. 17. The concentration of uranium in food is a product of the uranium concentration in soil times the soil-to-plant uptake factor. The annual intake in humans is then calculated by multiplying annual food consumption by the food's uranium concentration. Since the soil-plant conversion factor is based on a dry weight, the annual consumption must be adjusted to a dry-weight basis by multiplying by the dry-weight to wet-weight ratio. Parameters for these calculations are given in Section 6.5.9 of NUREG/CR-5512. Table 6-4 provides the parameters used in these calculations, and presents results for leafy vegetables, other vegetables and fruit.

Annual intakes of 14 kg/year and 97 kg/year were assumed for leafy vegetables and other vegetables and fruit, respectively. It was assumed that 25 percent of the food was grown on the site. It was also assumed that the uranium concentration in the garden or orchard was 526 pCi/g, the calculated uranium benchmark concentration for surface soils. Using a conversion factor for natural uranium of 1 mg = 677 pCi, then 526 pCi/g is equivalent to 777 mg/kg. The human intake shown in the first column of Table 6-4 is equal to the product of the parameters given in the subsequent columns. Table 6-4 shows that the total annual uranium intake from all food sources from the site is 51 mg/yr.

A two-compartment model of uranium toxicity in the kidney from oral ingestion was used to predict the burden of uranium in the kidney following chronic uranium ingestion. This model allows for the distribution of the two forms of uranium in the blood, modeling a kidney with two compartments, as well as several other human body compartments.

The total burden to the kidney is the sum of the two compartments. The mathematical representation for the kidney burden of uranium at steady state can be derived as follows:

$$Q_p = \frac{\mathrm{IR} \times \mathrm{f_1}}{\lambda_\mathrm{p}(1 - \mathrm{f_{ps}} - \mathrm{f_{pr}} - \mathrm{f_{pl}} - \mathrm{f_{pk}} - \mathrm{f_{pk1}})}$$

Where:

Q_p = *Uranium burden in plasma (µg);*
IR = *dietary consumption rate (mg U/d);*
f_1 = *fractional transfer of uranium from GI tract to blood (unit less);*
f_{ps} = *fractional transfer of uranium from plasma to skeleton (unit less);*
f_{pr} = *fractional transfer of uranium from plasma to red blood cells (unit less);*
f_{pl} = *fractional transfer of uranium from plasma to liver (unit less);*
f_{pt} = *fractional transfer of uranium from plasma to soft tissue (unit less);*
f_{pk1} = *fractional transfer of uranium from plasma to kidney compartment 1 (unit less); and*
λ_p = *biological retention constant in plasma (d-1).*

The burden in kidney compartment 1 is:

$$Q_{k1} = \lambda_p \times Q_p \times \frac{f_{pk1}}{\lambda_{k1}}$$

Where:

Q_{k1} = *uranium burden in kidney compartment 1(mg); and*
λ_{k1} = *biological retention constant of uranium kidney compartment 1(d-1).*

Similarly, for compartment 2 in the kidney, the burden is:

$$Q_{k2} = \lambda_p \times Q_p \times \frac{f_{pk2}}{\lambda_{k2}}$$

Where:

Q_{k2} = *uranium burden in kidney compartment 2(µg);*
λ_{k2} = *biological retention constant of uranium kidney compartment 2 (d-1); and*
f_{pk2} = *fractional transfer of*

The total burden to the kidney is the sum of

$$Q_{k1} + Q_{k2} = \frac{IR \times f_1}{\lambda_p(1 - f_{ps} - f_{pr} - f_{pl} - f_{pk} - f_{pk1})} \times \left(\frac{f_{pk1}}{\lambda_{k1}} + \frac{f_{pk2}}{\lambda_{k2}}\right)$$

The parameter input values for the two-compartment kidney model include the daily intake of uranium estimated for residents at this site, and the values recommended by ICRP 69 as listed below. The daily uranium intake rate is estimated to be 0.14 mg/day (51 mg/year) from ingestion while residing at this site.

IR = 0.14 (mg/day)
f_1 = 0.02
f_{ps} = 0.105
f_{pr} = 0.007
f_{pl} = 0.0105
f_{pt} = 0.347
f_{pk1} = 0.00035
f_{pk2} = 0.084

λ_{k2} = ln (2)/5 years
λ_{k1} = ln (2)/7 days
Where ln (2) =0.693…

Given a daily uranium intake of 0.14 mg/day at this site and the above equation, the calculated uranium mass in the kidneys is 0.0093 mg, or a concentration of 0.03 ug U/g kidney. This is three percent of the 1.0 ug U/g value that has generally been understood to protect the kidney from the toxic effects of uranium. Some researchers have suggested that mild effects may be observable at levels as low as 0.1 ug U/g of kidney tissue. Using 0.1 ug U/g as a criterion, the intake is thirty percent of the level where mild effects may be observable.

The EPA evaluated available chemical toxicity data and found that mild proteinuria has been observed at drinking water levels between 20 and 100 ug/liter. Assuming water intake of 2 liters/day, this corresponds to an intake of 0.04 to 0.2 mg/day. Using animal data and a conservative factor of 100, the EPA arrived at a 30 ug/liter limit for use as a National Primary Drinking Water Standard (Federal Register, December 7, 2000). This is equivalent to an intake of 0.06 mg/day for the average individual.

This analysis indicates that a soil limit of 526 pCi/g of natural uranium would result in an intake of approximately 0.14 mg/day. Using the most conservative daily limit corresponding to the National Primary Drinking Water standard, a soil limit of 225 pCi/g corresponds to the EPA intake limit from drinking water with a uranium concentration of 0.06 mg/day. Therefore exposure to soils containing 225 pCi/g of natural uranium should not result in chemical toxicity effects. Since the roots of fruit trees would penetrate to considerable depths, limiting subsurface uranium concentrations to 225 pCi/g is also appropriate.

ALARA considerations require that an effort be made to reduce contaminants to as low as reasonably achievable levels. The ALARA goals are normally based on a cost-benefit analysis. For the cleanup of gamma-emitting radionuclides, the cost of cleanup becomes excessively high as soil concentrations and/or gamma emission rates become indistinguishable from background.

Cleanup of uranium mill sites has demonstrated that conservatively derived gamma action levels, along with appropriate field survey and sampling procedures, result in near-background ^{226}Ra concentrations for a site. In addition, the presence of a mixture of ^{226}Ra and uranium will tend to drive the cleanup to even lower ^{226}Ra concentrations. The results presented here are therefore suggested to represent ALARA concentrations.

We propose, to be consistent with previous analyses at similar sites, an ALARA goal limiting the natural uranium concentration in the top 15 cm soil layer to 150 pCi/g,

averaged over 100 square meter areas. The uranium concentration should be limited to 225 pCi/g for deeper soil depths because of chemical toxicity concerns. Table 6-5 summarizes these conclusions.

6.4.2 Excavation Control Monitoring

AUC will use hand-held and GPS-based gamma surveys to guide soil remediation efforts. Field personnel will monitor excavations with hand-held detection systems to guide the removal of contaminated material to the point where there is high probability that an area meets the cleanup criteria. Support will be provided by GPS-based gamma surveys periodically to more accurately assess the progress of excavation.

6.4.3 Surface Soil Cleanup Verification and Sampling Plan

Cleanup of surface soils will be restricted to a few areas where there are known spills or leaks and, potentially, small spills or leaks near wellheads. Spill and leak locations and sizes will be documented to ensure cleanup criteria are met prior to final decommissioning. Final GPS-based gamma surveys will be conducted in potentially contaminated areas. Areas will be divided into 100 m^2 grid blocks. Soil samples will be obtained from grid blocks with gamma count rates exceeding the gamma action level. The samples will be multi-point composites and will be analyzed at an offsite laboratory for ^{226}Ra and natural uranium.

6.4.4 Quality Assurance

Remedial action final verification soil samples will be sent to a commercial laboratory for analysis of ^{226}Ra and U-Nat. AUC will evaluate and qualify the laboratory's quality assurance program prior to sample analysis, and will maintain a file that will contain the laboratory's Quality Assurance Manual (QAM) including certifications and audit reports.

6.5 Decommissioning Health Physics and Radiation Safety

The health physics and radiation safety program for decommissioning will ensure that occupational radiation exposure levels will be kept as low as reasonably achievable during decommissioning. The RSO or the designated alternate will be on site during any decommissioning activities where a significant radiation or radioactive materials exposure hazard exists. In general, the radiation safety program discussed in Section 5 will be used as the basis for development of the decommissioning health physics program. Health physics surveys conducted during decommissioning will be guided by applicable regulatory guidance.

6.5.1 Records and Reporting Procedures

At the conclusion of site decommissioning and surface reclamation, a report containing all applicable documentation will be submitted to the NRC. Records of all contaminated materials transported to a licensed disposal site will be maintained for a period of five years or as otherwise required by applicable regulations at the time of decommissioning.

6.6 Financial Assurance

AUC will maintain financial assurance instruments in the form of an instrument approved by NRC under Part 40, Appendix A, Criterion 9, and the State of Wyoming to cover the costs of groundwater restoration, reclamation, decommissioning and waste disposal in accordance with NUREG-1569 Acceptance Criteria 6.5.3. The financial assurance estimate can be found in Addendum 6-A, within the Restoration Action Plan. In accordance with NRC and WDEQ requirements, an updated annual financial assurance estimate revision will be submitted to NRC and WDEQ each year to adjust the financial assurance instrument amount to reflect existing operations and those planned for construction or operation in the following year. After review and approval of the annual financial assurance estimate revision by NRC and WDEQ, AUC will revise the financial assurance instrument to reflect the revised amount. AUC will:

- Automatically extend the existing financial assurance amount if NRC has not approved the extension at least 30 days prior to the expiration date;
- Revise the financial assurance arrangement within three months of NRC approval of a revised closure (decommissioning) plan, if estimated costs exceed the amount of the existing financial assurance;
- Update the financial assurance to cover any planned expansion or operational change not included in the annual financial assurance update at least 90 days prior to beginning associated construction;
- Update the financial assurance in the event that an excursion of ISR production solutions is not recovered within 60 days; and
- Provide the NRC a copy of the State's financial assurance review and the final financial assurance arrangement.

Groundwater restoration costs are based on seven pore volumes of combined active groundwater restoration activities. Production Unit pore volumes (PV) are determined using the following equation:

$$PV = A \times T \times FF \times P \times CF$$

Where:

A = Production Unit pattern area (square feet)
T = average completed thickness (feet)
FF = flare factor (unit less)
P = effective porosity (percent)
CF = conversion factor (7.48 gallons per cubic foot)

The "average completed thickness" in this equation is the average screened interval of the production wells screened in the PZA for uranium recovery operations. Based on delineation drilling in the proposed Production Unit 1 (PU1) area AUC has estimated that the average screen thickness for PU1 will be 12 feet.

AUC is using a flare factor of 1.44 for the financial assurance estimate attached in Addendum 6-A. Using the equation provided above with an effective porosity of 24 percent and an average thickness of 12 feet, the calculated pore volume for PU1 is approximately 46,531,584 gallons. The affected ore zone area for PU1 is estimated to be 1,500,000 square feet (34.4 acres). A more detailed discussion of the pore volume calculation is provided in Section 3.1.9 of this TR.

Table 6-1: Baseline Groundwater Restoration and Post-Restoration Stability Monitoring Constituents

Constituents (reported in mg/l unless noted)	Recommended Analytical Method (methods may be substituted using Best Available Technology (BAT) and current approved agency methods)
General Parameters	
Conductivity (umhos/cm)	SM 2510B
pH (standard units)	SM 4500H+B
Total Dissolved Solids (TDS) @ 180ºF	EPA 160.1/SM2540C
Major Anions	
Ammonia Nitrogen as N	EPA 350.1
Bicarbonate as HCO_3	SM 2320B
Carbonate as CO_3	SM 2320B
Chloride	EPA 300.0/SM 4500CL B
Fluoride	SM 4500F C/EPA 300.0
Nitrate + Nitrite as N	EPA 353.2/300.0
Sulfate	EPA 375.1/375.2/300.0
Total Alkalinity	SM 2320B
Major Cations	
Calcium	EPA 200.7/215.1/215.2
Magnesium	EPA 200.7/242.1
Potassium	EPA 200.7/258.1
Sodium	EPA 200.7/273.1
Metals	
Arsenic	EPA 206.3/200.9/200.8
Barium	EPA 200.7/200.8
Boron	EPA 212.3/200.7
Cadmium	EPA 200.9/200.7/200.8
Chromium	EPA 200.9/200.7/200.8
Copper	EPA 200.7/200.8
Total and Dissolved Iron	EPA 236.1/200.9/200.7/200.8
Lead	EPA 200.7/200.8
Mercury	EPA 245.1
Molybdenum	EPA 200.7/200.8
Nickel	EPA 200.7/200.8
Selenium	EPA 270.3/200.9/200.8
Total Manganese	EPA 200.9/200.7/200.8/243.1/243.2
Uranium	DOE MM 800/EPA 200.8
Vanadium	EPA 286.1/286.2/200.7/200.8
Zinc	EPA 200.7/200.8
Radionuclides	
Gross Alpha (pCi/l)	EPA 900.0/EPA 900.1/SM 7110B
Gross Beta (pCi/l)	EPA 900.0/EPA 900.1/SM 7110B
^{226}Ra (pCi/l)	DOE RP450/EPA 903.0/SM 7500-R-AC
^{228}Ra (pCi/l)	SM 7500-R-AD/EPA RA-05

Source: NRC (2003), WDEQ (2005)

Table 6-2: Geologic and Hydrogeologic Analogs

Parameter	Unit	Proposed Reno Creek Project	Irigaray	Smith Ranch-Highland
Data Source	---	(1)	(2)	(3)(4)
Ore Thickness	ft	10-15	15-25	10
Depth to Ore Zone	ft	250-400	100-300	450-1,000
Porosity	%	24	23-29	27
Hydraulic Gradient	ft/ft	0.0017-0.0034	0.005	0.0009
Transmissivity	Ft^2/d	27-917	40-136	120-180
Hydraulic Conductivity	ft/d	0.6-8.4	0.4-1.4	1.3-2.0
Hydraulic Conductivity	md	214-3000	179-676	600-950
Storativity		6.1E-05-1.5E-04	2.7E04	4.0E-05 -2.0E-04
Groundwater Velocity	ft/y	3-30	7-11	ND

Data Sources:

(1) Regional baseline monitor wells, refer to TR Addendum 2.7-B.
(2) "Irigaray Wellfield Restoration Report," COGEMA 2004.
(3)"Smith Ranch-Highland Uranium Project Source Material License Application," Power Resources 2003.
(4) "Highland Uranium Project Mine Unit 9 Hydrologic Test Report," Cameco 2008.
ND - no data

Table 6-3: Pre-Recovery Water Quality Analogs

Parameter	Unit	Proposed Reno Creek Project	Irigaray	Smith Ranch - Highland
Data Source	---	(1)	(2)	(3)
Water Type	---	Na-SO_4	Na-SO_4	Na/Ca-HCO_3/SO_4
TDS	mg/L	550-1520	270-1,050	250-480
Sulfate	mg/L	267-913	130-630	80-220
Bicarbonate	mg/L	<5-305	5-150	160-230
Chloride	mg/L	2-11	5-15	3-16
Calcium	mg/L	44-115	1-35	40-70
Magnesium	mg/L	<1-26	0-9	8-13
Sodium	mg/L	120-323	90-280	40-90
Manganese	mg/L	<0.01-0.25	0.05-0.19	0-0.2
Selenium	mg/L	<0.005-0.049	0.001-0.4	0-0.01
Arsenic	mg/L	<0.001-0.035	0.001-0.1	0-0.007
Uranium	mg/L	0.0016-0.607	0.0003-19	0.004-0.62
^{226}Ra	pCi/L	1.3-385	0-250	3-1,035

Data Sources:

(1) Regional baseline monitor wells, refer to Addendum 2.7-B Table 2.7B-23.

(2) "Irigaray Wellfield Restoration Report," COGEMA 2004.

(3) "Mine Unit B Ground Water Restoration Report, Smith Ranch – Highland Uranium Project," Cameco 2009a.

Table 6-4: Annual Intake of Uranium from Ingestion

Food Source	Human Intake (mg/yr)	Soil Concentration (mg/kg)	Soil to Plant Ratio (mg/kg plant to mg/kg soil)	Annual Consumption (kg)	Dry Weight Wet Weight Ratio
Leafy Vegetables	9.2	777	1.70E-02	3.5	0.2
Other Vegetables	35	777	1.40E-02	13	0.25
Fruit	6.7	777	4.00E-03	12	0.18
Total	51				

Table 6-5: Soil Cleanup Criteria and Goals

Layer Depth	^{226}Ra (pCi/gm)		U-Nat (pCi/gm)	
	Limit	Goal	Limit	Goal
Surface (0-15 cm)	5	5	225	150
Subsurface (15 cm layers)	15	15	225	225

6.7 References

EPA (U.S Environmental Protection Agency). "*Technologically Enhanced Naturally Occurring Radioactive Material From Uranium Mining, Vol. 1: Mining and Reclamation Background*", EPA 402-R-05-007, revised June 2007.

LCI (Lost Creek Inc.). 3rd Round WDEQ/LQD Comment Responses, October 22, 2009, NRC ADAMS Accession No. ML100610158.

Table References

Table 6-1: Baseline Groundwater Restoration and Post-Restoration Stability Monitoring Constituents; Source: NRC (2003), WDEQ (2005)

Table 6-2: Geologic and Hydrogeologic Analogs; Data Sources: (1) Regional baseline monitor wells, refer to TR Addendum 2.7-B. (2) "Irigaray Wellfield Restoration Report," COGEMA 2004. (3)"Smith Ranch-Highland Uranium Project Source Material License Application," Power Resources 2003. (4) "Highland Uranium Project Mine Unit 9 Hydrologic Test Report," Cameco 2008.

Table 6-3: Pre-Recovery Water Quality Analogs; Data Sources: (1) Regional baseline monitor wells, refer to Addendum 2.7-B Table 2.7B-23. (2) "Irigaray Wellfield Restoration Report," COGEMA 2004. (3) "Mine Unit B Ground Water Restoration Report, Smith Ranch – Highland Uranium Project," Cameco 2009a.

TABLE OF CONTENTS

7 POTENTIAL ENVIRONMENTAL EFFECTS 7-1
7.1 Potential Impacts during Construction for the Proposed Action 7-1
7.1.1 Potential Construction Impacts to Land Use 7-2
7.1.1.1 Changing and Disturbing Existing Land Uses 7-3
7.1.1.2 Access Restrictions and Establishment of Right-of-Way 7-5
7.1.1.3 Mineral Rights 7-6
7.1.1.4 Livestock Access Restrictions 7-6
7.1.1.5 Restrictions on Recreational Activities 7-6
7.1.1.6 Altering Historic and Cultural Resources 7-6
7.1.2 Potential Construction Impacts to Socioeconomics 7-7
7.1.3 Potential Construction Impacts to Historic, Scenic and Cultural Resources 7-9
7.1.3.1 Historic and Cultural Resources Impacts 7-9
7.1.3.2 Visual and Scenic Resources Impacts 7-10
7.1.4 Potential Construction Impacts to Air Quality 7-11
7.1.5 Potential Construction Impacts to Geology and Soils 7-11
7.1.5.1 Potential Geology Impacts 7-12
7.1.5.2 Potential Soils Impacts 7-12
7.1.6 Potential Construction Impacts to Water Resources 7-13
7.1.6.1 Potential Construction Impacts to Surface Water 7-13
7.1.6.2 Potential Construction Impacts to Groundwater 7-14
7.1.7 Potential Ecological Effects of Construction 7-15
7.1.8 Potential Noise Effects of Construction 7-16
7.2 Potential Impacts during Operations for the Proposed Action 7-19
7.2.1 Potential Operation Impacts to Land Use 7-19
7.2.2 Potential Operation Impacts to Socioeconomics 7-19
7.2.3 Potential Operation Impacts to Historic, Scenic and Cultural Resources .. 7-21
7.2.3.1 Potential Historic and Cultural Impacts 7-21
7.2.3.2 Potential Scenic Resources Impacts 7-22
7.2.4 Potential Operation Impacts to Air Quality 7-23
7.2.4.1 Potential Radiological Emissions 7-24
7.2.4.2 Potential Non-Radiological Emissions 7-24
Potential Operation Impacts to 7-25
7.2.5 Geology and Soils 7-25
7.2.5.1 Potential Geology Impacts 7-25
7.2.5.2 Potential Soils Impacts 7-26
7.2.6 Potential Operation Impacts to Water Resources 7-27
7.2.6.1 Potential Surface Water Impacts 7-27
7.2.6.2 Potential Ground Water Impacts 7-28
7.2.7 Potential Operation Impacts to Ecological Resources 7-31

7.2.8 Potential Operation Impacts to Noise 7-32
7.3 Radiological Effects 7-33
7.3.1 Exposure Pathways 7-33
7.3.2 MILDOS -AREA 7-34
7.3.2.1 Site Specific Inputs 7-36
7.3.2.2 Source Term Estimates 7-37
7.3.2.3 Total Effective Dose Equivalent to Individual Receptors 7-39
7.3.2.4 Population Dose 7-39
7.3.2.5 Exposure to Flora and Fauna 7-39
7.3.3 Potential Occupational Radiological Impacts 7-40
7.4 Non-Radiological Effects 7-44
7.4.1 Potential Exposure from Air Pathways 7-44
7.4.1.1 Fugitive Dust 7-44
7.4.1.2 Combustion Engine Emissions 7-44
7.4.2 Potential Exposures for Water Pathways 7-44
7.5 Effects of Accidents 7-45
7.5.1 Liquid Waste and Process Fluid Accidents 7-45
7.5.1.1 Vessel or Tank Failure 7-45
7.5.1.2 Chemical Spills and Accidents 7-47
7.5.1.3 Production Unit Spill/Pipeline Failure 7-53
7.5.1.4 Lixiviant Excursion 7-53
7.5.1.5 Lined Backup Pond Accidents 7-54
7.5.1.6 Yellowcake Dryer Accident 7-55
7.5.2 Fires and Explosions 7-57
7.5.3 Transportation Accident Risk 7-58
7.5.3.1 Yellowcake Shipment 7-59
7.5.3.2 Process Chemicals and Fuel Shipment 7-60
7.5.3.3 Loaded Resin Shipments 7-61
7.5.3.4 11e.(2) Byproduct Material Shipment 7-61
7.5.3.5 Solid Non-11e.(2) Byproduct Material Shipment 7-62
7.5.3.6 Hazardous Waste Shipment 7-62
7.5.3.7 Accident Risk Associated with Coal Bed Methane Development 7-63
7.5.3.8 Natural Disaster Risk 7-64
7.6 Socioeconomic Costs 7-66
7.7 References 7-67

List of Tables

Table7-1: Disturbance Calculation 7-18
Table7-2: Estimated Average Maximum Doses for Smith Ranch Dominant Sources 7-42

List of Figures

Figure 7-1: Exposure Pathways 7-43

List of Addenda

Addendum 7-A: MILDOS Report and Example Output

7 POTENTIAL ENVIRONMENTAL EFFECTS

As noted in NUREG-1910 (GEIS, Sec. 1 Introduction), there can be a scope of potential environmental effects associated with ISR projects such as the proposed Reno Creek Project (Proposed Project). This section discusses and describes the degree of potential environmental impacts that will be associated with construction and operations of the Proposed Project. Potential environmental impacts can be direct, indirect, and/or cumulative in nature and can be temporary (short term) or permanent (long term). As noted in NUREG-1748 (Appendix F), direct effects are caused by the action and occur at the same time and place. Indirect effects are caused by the action and are later in time or farther removed in distance but still reasonably foreseeable. Cumulative impacts causes by the aggregate effects of past, present, and reasonably foreseeable future. Comparable and/or further discussions regarding potential environmental effects can be found in:

- Section 2 of the TR (Site Characterization);
- Section 4 of the ER (Environmental Effects);
- Section 6 of the ER (Mitigation Measures);
- Section 7 of the ER (Environmental Measurements/Monitoring); and
- Section 8 of the ER (Environmental Consequences).

7.1 Potential Impacts during Construction for the Proposed Action

The following section summarizes the environmental impacts of the Proposed Project from construction. A more detailed discussion of the environmental impacts of all phases of the Proposed Project is included in Section 4 of the ER.

The Proposed Action will consist of significant features associated with ISR recovery operations as described below:

- A series of sequentially developed Production Units (12 total) consisting of multiple well fields of production (injection and recovery) wells to inject barren lixiviant and to recover pregnant lixiviant;
- Horizontal and vertical excursion monitoring well networks for detection of lixiviant migrating outside of the ore body/recovery zones (excursions);
- Central Processing Plant (CPP) consisting of pressurized, down-flow ion exchange (IX) columns, elution circuit, precipitation circuit, and yellowcake drying and packaging facilities. The CPP also will be used to facilitate the necessary solutions and processes for groundwater restoration after uranium recovery operations have ceased;
- The CPP will be equipped to receive and process equivalent feed, pursuant to NRC RIS 2012-06;

- On-site laboratory, office and maintenance building, reagent storage facilities, and other facilities or areas used to house work areas or equipment storage; and
- Up to four Class I UIC disposal wells (DDW) to dispose of liquid 11e.(2) byproduct material in the form of production bleed and groundwater restoration fluids generated during ISR operations with adequate backup storage capacity.
- Grading and construction of access roads, as required.

Although the Proposed Action covers a total of 6,057 acres, not all lands will be affected by the proposed operations. Potentially affected lands during the Proposed Action's 16 year life span include:

- Disturbed lands will total approximately 154 acres or around 2.5 percent of the Proposed Project area. Of the 154 acres, there will be two types of disturbance:
  1) Short term- disturbance will be small in time duration (< six months) including trunklines, drill pits and drill pads, top soil storage;
  2) Long term- disturbance will be extended in time duration (> six months) including the fenced area around the CPP and, backup pond, Deep Disposal Well (DDW) pad, and top soil storage.
- Controlled areas will be fenced to limit access to project associated operations and is estimated to encompass 481 acres or approximately 8 percent of the Proposed Project Area. Anticipated controlled areas include all fenced areas around the CPP, wellfields, backup pond, and DDWs. Restricted areas can be located within controlled areas;
- Restricted areas will control access to protect individuals from exposure to radiation and 11e.(2) byproduct materials including selected areas within the CPP building, 11e.(2) byproduct storage areas, backup pond, DDW buildings, and/or areas exceeding 2 mrem per hour; and
- Unrestricted areas are within the Proposed Project area to which access is neither limited nor controlled by the Proposed Action. These areas encompass approximately 5,576 acres or around 92 percent of the Proposed Project area.

Considering the relatively small size of the area affected by operations, the exclusion of grazing from this area over the course of the Proposed Project will have an insignificant impact on local livestock production. Fencing will be kept to the smallest possible area to minimize impacts from livestock exclusion. Oil and Gas and CBM facilities and infrastructure near the Proposed Project will not be affected.

7.1.1 Potential Construction Impacts to Land Use

Much of the Proposed Project area will remain undisturbed due to the relatively minor nature of surface disturbance associated with the ISR process. Nevertheless, the

construction of the Proposed Project infrastructure has the potential to impact the land use by:

- Changing and disturbing existing land uses;
- Restricting access and establishment of right-of-ways;
- Limiting livestock grazing;
- Limiting recreational activities;
- Altering historic and cultural resources.

These potential impacts to land use are considered temporary and reversible through the process of post-operation surface reclamation, well plugging, and returning the land to unrestricted use consistent with pre-operational conditions. AUC may leave affected areas unrestored at the request of landowners (e.g. roadways and structures). Regardless of the final disposition, all areas and structures will be decontaminated to allow for unrestricted use as described in further detail in TR Section 6.

7.1.1.1 Changing and Disturbing Existing Land Uses

Minimal surface disturbance will occur as a result of construction of the Proposed Project CPP and associated structures. A significant portion of the project area has previously been disturbed by infrastructure and other prior and on-going activities. Normal rangeland use will be temporarily excluded from the areas of active ISR operations. Gas pipeline facilities will not be affected as AUC has developed close working relationships with their potentially affected developers and operators. The infrastructure and disturbance described below is shown in TR Figure 3-1 and tabulated in TR Table 2.1-2. Section 4 of the ER discusses these potential impacts in more detail.

Central Processing Plant

The CPP area will include the CPP building, office/maintenance building, backup pond, parking area, laydown area, and a solid11e.(2) storage area. Conceptually, the CPP area will disturb approximately 15.5 acres and will be fenced to control access. Surface disturbing activities associated with construction of the CPP area will include topsoil stripping; excavation, backfilling, compacting, and grading to prepare a level site. The Taffner homestead is currently positioned where the proposed CPP will be located. AUC will acquire the Taffner property prior to construction and it will not thereafter be used as a residence.

These land uses will be temporarily changed as the CPP area will be used for industrial purposes throughout the construction, operation, aquifer restoration, and decommissioning phases.

Production Unit Areas

Each Production unit constructed under the Proposed Action will consist of injection and recovery wells connected to a header house (via lateral trunklines), and associated monitor wells. Construction of the 12 planned Production Units within the Proposed Project area is estimated to disturb approximately 113 acres; although, disturbance will consist of both long term (> six months) and short term (< six months) disturbance. As noted in Section 2.11.1 of the ISR GEIS, less than half of the wellfield areas are typically disturbed by construction activities, including access roads, mud pits, header houses, and pipelines. Construction will be phased, with three to seven wellfields in various stages of construction at one time. Surface disturbing activities associated with Production Unit construction will include topsoil stripping, constructing temporary well pads, constructing temporary access roads, excavating mud pits, trenching for pipelines and buried electrical utilities, and excavating foundations for header houses.

The Production Units will be constructed on land currently used for livestock grazing. The Production Unit areas will be fenced using 4-line stranded barbed wire fence to restrict access of livestock. The fenced areas associated with the Production Units are estimated to encompass 461 acres. This land use will temporarily change land use for all areas actively disturbed or fenced by Production Unit construction. However, temporary well pads, mud pits, well pad access roads, and pipelines will be restored and reseeded at the end of construction. Therefore, disruption to livestock grazing will be temporary except around fenced Production Unit areas.

Access Roads

Access roads constructed under the Proposed Action will include secondary access roads between the CPP area and the Production Unit header houses, and tertiary access roads used to access monitor wells. The estimated surface disturbance associated with access road construction is approximately 23 acres and is calculated assuming approximately seven miles of 12 feet wide access roads plus 19 miles of monitor well ring tertiary roads eight feet wide. Surface disturbance activities associated with access road construction include topsoil stripping and stockpiling, excavation, backfill, compaction, and grading. Secondary access roads will generally follow the existing topography, and tertiary roads will be unconstructed, two-track roads.

Access roads will be constructed on land currently used for livestock grazing. Potential changes in this land use will be small and temporary. Surface disturbance will also be minimized by locating access roads, pipelines, and utilities in common corridors and by utilizing existing roads wherever possible. There are numerous existing access roads that traverse the Proposed Project area which AUC will use whenever possible. Majority of these roads were developed and utilized for oil and gas, CBM, and ranching activities.

Deep Disposal Wells

AUC will construct up to four deep disposal wells as part of the Proposed Action. Each deep disposal well has the potential to disturb approximately one acre as these will be fenced to exclude wildlife. Surface disturbing activities associated with deep disposal well construction include topsoil stripping, well pad grading, and mud pit excavation. The locations of the four deep disposal wells are all on land currently used for livestock grazing on rangeland.

Pipelines

Pipelines will include trunk lines carrying barren lixiviant and recovery solutions between the CPP and feeder lines, feeder lines carrying these solutions between the trunk lines and header houses, individual well lateral lines carrying these solutions between the header houses and injection/recovery wells, and deep disposal well pipelines. The total estimated disturbance area resulting from the main trunk line and deep disposal pipeline will be approximately 22 acres. Surface disturbing activities associated with pipeline construction will include topsoil stripping, trenching, backfill, topsoil replacement, and reseeding. Pipeline corridors will be restored and re-seeded, typically within the same construction season, and changes in land use will be short term (< six months). Potential changes in land use are small and similar to those described previously for Production Unit construction, but the potential impacts will be smaller due to a smaller disturbance area, lack of fences, and short term disturbance. Surface disturbance will be minimized by locating pipelines in common corridors with access roads and utilities wherever possible.

7.1.1.2 Access Restrictions and Establishment of Right-of-Way

Access during construction activities will be controlled by fencing. Controlled areas will be relatively small and located primarily around the proposed CPP, Production Units, and deep disposal wells. As previously mentioned, Production Unit development will occur in phases and accordingly not all construction disturbances will occur simultaneously. Disturbed areas will be reclaimed re-seeded and made accessible as Production Units are exhausted and decommissioned.

No public right-of-way will be established during construction of the Proposed Project. All access roads will be private access roads for authorized AUC employees and contractors. All access roads constructed will be reclaimed during decommissioning unless transferred to the affected landowner after decommissioning is complete.

7.1.1.3 Mineral Rights

The only known minerals currently being recovered in the Proposed Project area include conventional oil and gas and CBM. There are numerous existing access roads and well pads on-site associated with each of these operations. One producing oil well and 46 producing CBM wells are located within the Proposed Project boundary. The location of these wells are shown in Figure 2.7B-59 in Addendum 2.7-B of the TR.

The existing CBM wells and DDWs will not be impacted by the Proposed Action due to the substantial difference in target completion intervals between CBM production (631 to 1,424 feet) and ISR injection and recovery wells (250 to 400 feet).

7.1.1.4 Livestock Access Restrictions

The primary land use within the Proposed Project area is livestock grazing on rangeland. Some of this land use will be impacted during construction through the exclusion of livestock from disturbed and fenced areas. Production Unit development will occur in phases, resulting in temporary and phased access restrictions. Much of the disturbed area will be restored, re-seeded and made accessible as Production Units are reclaimed (i.e., properly plugged, & abandoned in accordance with WSEO requirements) and decommissioned. AUC estimates that the controlled area of approximately 481 acres (CPP area and active Production Units) will be fenced to exclude livestock. This represents 8 percent of the Proposed Project area. Considering the relatively small size of the area impacted by construction, the exclusion of grazing from this area over the course of the Proposed Project will have a minimal impact on local livestock production. AUC will establish surface use agreements with surface owners/lessees to provide compensation for the temporary loss of area used for agricultural purposes.

7.1.1.5 Restrictions on Recreational Activities

Currently, the primary recreational activity in the vicinity of the Proposed Project is hunting, which will be restricted to protect workers. Hunting will be restricted within the Proposed Project area on private lands for the life of the project. There is no public access to private lands and limited recreation opportunity on State of Wyoming managed lands within the Proposed Project area. Therefore, the potential impact on such land uses due to the restricted access areas is anticipated to be small.

7.1.1.6 Altering Historic and Cultural Resources

Potential historic and cultural resource impacts from the Proposed Action are discussed in ER Section 4.8, and mitigation measures are presented in ER Section 6.8 of this

document. Potential impacts to historic and cultural resources will be minimized by avoiding construction at sites identified by the Class III inventory as potentially eligible for listing on the NRHP. Consultation with the appropriate SHPO and Tribal Historic Preservation Office (THPO) will ensure all sites existing or located during AUC's operations are properly managed. An Unanticipated Discovery Plan (UDP) will be implemented prior to construction for phased identification of previously unidentified historic and cultural resources encountered during all phases of the Proposed Action. This will include a stop-work provision and a requirement to seek expert advice and approval prior to resuming activities, if any previously undiscovered cultural resources are encountered. A brief outline of the UDP can be found in ER Section 7.5

7.1.2 Potential Construction Impacts to Socioeconomics

As noted in NUREG-1910 (GEIS, Section 4.2.10.1), the construction phase will cause a potentially moderate impact to the local economy, resulting from the purchases of goods and services directly related to construction activities. Impacts to community services in Wright, Gillette, and rural Campbell County or the towns of Midwest and Edgerton in northern Natrona County, such as roads, housing, schools, and energy costs will be minor or non-existent and temporary.

Anticipated employment during the construction phase will be most intensive during the first year of the Proposed Project, with approximately 146 direct jobs. During the second year, direct construction employment is expected to decline to about 50 direct jobs. Through year nine, the number tapers down from 50 to about 20 direct jobs. Direct construction jobs from year nine through 14 will average about five jobs annually. Direct construction jobs will then increase to approximately 28 during decommissioning.

The construction phase will cause a Moderate positive impact to the local economy, resulting from the purchases of goods and services directly related to construction activities. Impacts to community services in Wright, Gillette, and rural Campbell County or the towns of Midwest and Edgerton in northern Natrona County, such as roads, housing, schools, and energy costs will be Small or non-existent and temporary.

Most construction work available to the local construction labor pool consists of temporary contract work that varies in duration, depending on the scope of each construction project. Further, the number of unemployed construction workers does not represent the number of workers that will be available to the Proposed Project from the local construction labor pool. The number is an annual average that does not take into account monthly variations in the available construction labor pool from construction start-ups and completions. Contractors for projects located throughout northeastern Wyoming typically hire from the local construction labor pool. The actual number of construction workers available for the Proposed Project will potentially draw from the entire construction labor pool of 4,600 in Campbell County (U.S. Bureau of Economic

Analysis 2009), as construction activities from some active projects will conclude so that workers will be available for future projects.

Potential Impacts to Demographics

Due to the short duration of construction (1 year) and small size of the construction workforce, the impacts of construction on demographic conditions would be limited. It is assumed that AUC would employ workers from the surrounding area, which would reduce demands for public services. Also, due to the short duration of the construction phase, workers would not likely relocate their families to the region. Therefore, demographic impacts from the Proposed Action will be small.

Potential Impacts to Housing

Construction workers relocating to the area would cause a short-term increase in the demand for temporary (rental) housing units in Campbell and surrounding counties. Any changes in employment would have little to no noticeable effect on the availability of housing in Campbell and surrounding counties. Due to the short duration of the construction phase and the availability of housing in the region, there would be little or no employment-related housing impacts. In addition, AUC assumes workers will currently live in the surrounding area, thereby reducing some of the need for additional housing.

Potential Impacts on Schools and Public Services

Due to the short duration of construction (1 year; the GEIS assumed 12 to 18 months), workers would not be expected to bring families and school-aged children with them, and therefore, there would be no impact on educational services during construction of the Proposed Project.

Potential Economic Impact

Construction of the Proposed Project would generate some tax revenue in the local economy through the purchase of goods and services as well as contributing to county and state tax revenues. Due to the short duration (1 year) and small size of the construction workforce, construction of the Proposed Project will have a small impact on local finances.

Potential Health and Social Services Impacts

The number of construction workers would cause a short-term increase in the demand for health and social services in Campbell and surrounding counties. However, due to the

short duration of the ISR construction phase and the small size of the construction workforce, there would be little or no impact on health and social services.

7.1.3 Potential Construction Impacts to Historic, Scenic and Cultural Resources

NRC's NUREG 1910 Vol. 2 (pg. 4.3-25) notes that most of the potential for adverse effects to potentially NRHP-eligible historic properties, traditional cultural properties, and paleontological material, both direct and indirect, will likely occur during land-disturbing activities. The Proposed Project has no known sites that are eligible for NRHP listing, as discussed in detail in Section 2.4 of this TR. Buried cultural features and deposits and paleontological material that are not visible on the surface during the initial cultural resources inventories could be discovered during earth-moving activities. AUC commits to implementing an Unanticipated Discovery Plan, which will include stop-work provision if any previously undiscovered cultural resources are encountered during construction and operations including site decommissioning and the engagement of an outside expert for guidance.

Potential indirect impacts also can occur outside the Proposed Project area and related facilities and components. Visual intrusions, increased access to formerly remote or inaccessible resources, potential impacts to traditional cultural properties and culturally significant landscapes, as well as other ethnographically significant cultural landscapes may adversely affect these resources. As described in Section 3.8 of the ER, no Native American heritage, special interest, or sacred sites have been formally identified and recorded to date by studies directly associated with the Proposed Project. Implementing a stop-work provision and other mitigation measures as described in Section 6.8 of the ER, will assure that potential impacts to historical and cultural resources will be minimized.

7.1.3.1 Historic and Cultural Resources Impacts

Class I and III cultural resource surveys were conducted on the proposed project area and the results are included in Addendum 3.8-A of the ER. Although specific potential impacts to cultural resources within the Proposed Project are presently not defined, none of the 78 known cultural resources is considered eligible for the National Register. Therefore, the current Proposed Project will not affect any known significant cultural resources and no additional archaeological work or special consideration is recommended.

The Proposed Project, as described in Section 4.1, construction could impact up to 481 acres, approximately 8 percent, of the total 6,057 acre Proposed Project area. NRC's NUREG 1910 Vol. 2 (pg. 4.3-25) notes that most of the potential for adverse effects to potentially NRHP-eligible historic properties, TCPs, and paleontological material, both direct and indirect, will likely occur during land-disturbing activities. Buried cultural

features and deposits and paleontological material that are not visible on the surface during the initial cultural resources inventories could be discovered during earth-moving activities. As described in Section 6.8 of this ER, AUC will implement an Unanticipated Discovery Plan to prevent the loss of undiscovered cultural artifacts. The discovery of cultural artifacts in an operational area shall result in a work stoppage in the vicinity of the find until the resources can be evaluated by a professional archaeologist.

Potential indirect impacts also can occur outside the Proposed Project area and related facilities and components. Visual intrusions, increased access to formerly remote or inaccessible resources, potential impacts to traditional cultural properties and culturally significant landscapes, as well as other ethnographically significant cultural landscapes may adversely affect these resources. As described in ER Section 3.8, no Native American heritage, special interest, or sacred sites have been formally identified and recorded to date by studies directly associated with the Proposed Project. Implementing a stop-work provision and other mitigation measures as described in Section 6.8 of this ER, will assure that potential impacts to historical and cultural resources will be minimized.

7.1.3.2 Visual and Scenic Resources Impacts

The Proposed Action will result in temporary, small impacts to the visual and scenic resources of the area that would be consistent with the visual resource classification of the area by the BLM. The BLM has classified the project area as a Class III and the management objective of VRM Class III is to partially retain the existing character of the landscape. The level of change to the characteristic landscape can be moderate. Under the Proposed Action, the character of the existing landscape would be retained, but would be modified with noticeable but minor additional industrial facilities, utilities, and roads.

Temporary and short-term visual effects during the construction period in each Production Unit will result from header house construction, well drilling, ground clearing, grading, vehicular and pedestrian traffic, construction of facilities, and construction of access roads and electric distribution lines. Following completion of any Production Unit installation, temporarily disturbed areas will be reclaimed. Only long-term effects associated with operations and maintenance will remain following post-construction reclamation. Construction debris will be removed from new construction areas as soon as possible and temporarily disturbed areas will be reclaimed as soon as possible following construction.

Potential long-term effects will result from the addition of structures to the landscape, such as the CPP and associated structures, header houses, wellhead covers, access roads, and electric distribution lines. Potential effects from long-term activities will occur over the life of the project, but will be removed at the end of the project lifecycle.

Heavy equipment and drill rigs brought in during construction activities may be visible from certain vantage points from Highway 387, Clarkelen/Turnercrest Road, and Cosner Road and views from the one residence nearest to the Proposed Project. Dust generated may also impact visual resources. Visible dust particles will be released during activities such as the mechanical disturbance of rock and soil materials, bulldozing, and vehicles traveling on gravel roads. Particles are also transported by wind blowing over the surface of bare land and stockpiles. As described in ER Section 6.9, dust will be minimized by wetting disturbed areas during construction, promptly restoring and re-seeding disturbed soil, and enforcing speed limits for AUC employees and contractors.

In general, resource protection measures proposed for erosion control, road construction, rehabilitation and re-vegetation will mitigate effects to visual quality. Thus the potential visual impacts will be Small and temporary.

7.1.4 Potential Construction Impacts to Air Quality

Construction activities at the Proposed Project site will cause minimal short-term effects on local air quality. Increased suspended particulates from vehicular traffic on unpaved roads, fugitive dust caused by wind erosion of areas cleared of vegetation, and diesel emissions from construction equipment will be the primary potential air quality impacts. The application of water to unpaved roads will reduce the amount of fugitive dust to levels equal to or less than the existing condition. Diesel emissions from construction equipment are expected to be short term only, essentially ceasing once the operational phase begins. Additional details on potential air quality impacts can be found in Section 4.6 of the ER.

7.1.5 Potential Construction Impacts to Geology and Soils

Potential geological impacts could only occur during construction and decommissioning, when relatively minor disturbance will occur to the subsoil and, potentially the surficial aquifer, if present, in the vicinity of the lined backup storage pond. As discussed in detail in Section 2.7 of this TR, while there is perched water in some of the near surface sands, none of them exhibit the characteristics of an aquifer. Therefore, there will be no potential impacts on any surficial aquifer. Potential impacts are primarily related to changes in surficial aquifer flow patterns and water levels and potential water quality degradation. Potential soil impacts may include soil loss, compaction, salinity, loss of soil productivity, and soil contamination. Construction activities at the Proposed Project site will result in a small and temporary disturbance of the soil. Approximately 2.5 percent (154 acres) of the total 6,057 acre Proposed Project area will be disturbed as a result of the earth-moving activities. Any soils removed or stockpiled during construction will be stabilized to minimize erosion for later use in the decommissioning phase of the project.

7.1.5.1 Potential Geology Impacts

Potential geological impacts could only occur during construction and decommissioning, when relatively minor, temporary disturbance will occur near the soil surface. NUREG-1748 notes that geological resources are more likely to exert an impact than be impacted by the Proposed Action. The main probable geologic hazard present in Wyoming is earthquakes.

Section 2.6.5 describes the seismic hazard of the Proposed Project area. This section describes how there are no active faults with surface expression in or near the Proposed Project area. Earthquake probabilities and consequences are discussed in Section 2.6.5, including current earthquake probability maps that are used in the newest building codes (2,500 year maps), which suggest a scenario that will result in moderate damage to buildings and their contents. The probability-based worst-case scenario could result in an Intensity VII earthquake in the area of the Proposed Project. In intensity VII earthquakes, damage is negligible in buildings of good design and construction, slight-to-moderate in well-built ordinary structures, considerable in poorly built or badly designed structures such as unreinforced masonry buildings. The proposed CPP and associated structures will be built to withstand an intensity VII earthquake.

The 2,500-year probabilistic map presented in TR Addendum 2.6C-6 shows that the peak ground acceleration with a 2% probability of exceedance in 50-years is 10 to 12 percent/g, which equates to a Level IV earthquake. Level VI earthquakes are felt by almost everyone around but do not cause significant damage. Since structures at the Proposed Project will be designed according to the 2,500-year probabilistic map, the risk of significant earthquake damage to the proposed facilities is small, as the total anticipated project life is approximately 16 years.

7.1.5.2 Potential Soils Impacts

Potential soil impacts include soil loss, compaction, salinity, loss of soil productivity, and soil contamination. Construction activities at the Proposed Project site will result in a small and temporary disturbance of the soil. Approximately 154 acres or 2.5 percent of the total 6,057 acre Proposed Project area will be affected as a result of vegetation and topsoil removal activities throughout the life of the project. Topsoil will be removed and stockpiled during construction and will be stabilized to minimize erosion for later use in the decommissioning phase of the project as required. Stockpiles and denuded soil surface will be stabilized by seeding with a cover crop to minimize erosion, in accordance with SOPs prepared post-licensing. Detailed soil impact mitigation measures are found in ER Section 6.3.

7.1.6 Potential Construction Impacts to Water Resources

The Proposed Action has the potential to impact surface water and groundwater to varying degrees during each phase of the project. As discussed in TR Section 2.7, surface water and groundwater within the Proposed Project area are used for livestock and wildlife watering and industrial use.

7.1.6.1 Potential Construction Impacts to Surface Water

Natural flow in the region is categorized as ephemeral and flows rarely, only occurring during snowmelt and rainstorm events. The headwaters of the Belle Fourche River are located within the Proposed Project area. The Belle Fourche River can be characterized as an ephemeral channel with isolated pockets of water and wetlands. Stock tanks and reservoirs are scattered throughout the Proposed Project area, however, these usually do not contain water, or very little water, by late in the summer season.

The primary potential impact from the removal of vegetation and disturbance of soil is water quality degradation. Surface water quality within the proposed project area has the potential to be adversely impacted by increasing suspended sediment concentrations due to vegetation removal and soil disturbance. This includes disturbance of up to 154 acres during the life of the Proposed Action, or about 2.5 percent of the Proposed Project area. ER Figure 1-5 depicts the location of all facilities proposed within the Proposed Project area. During construction temporary sediment control features will be used until vegetation can be re-established to minimize the potential impacts to surface water due to vegetation removal and soil disturbance. Temporary sediment control features include sediment logs, silt fence, straw bale, or other BMPs.

Construction activities for the Proposed Project CPP, ancillary structures, Production Units, and access roads have the potential to temporarily increase the sediment yield of the disturbed areas. The site disturbing activities will include vegetation removal and topsoil stockpiling, limited periods of low impact stream channel disturbance and minor wetland encroachment. These activities have the potential to result in minor hydrocarbon spills, primarily related to fuel and lubricants from heavy equipment operation.

There will be minimal impacts on ephemeral stream channels from construction activities. Roads will be constructed in a manner so as to avoid the ephemeral stream channels where possible. BMPs will be implemented in the occurrence of stream channel crossings. Such BMPs will be consistent with those applied at other licensed ISR facilities.

Construction activities at the CPP, Production Units, along pipeline alignments, and roads have the potential to temporarily increase the sediment yield of disturbed areas. However, the relative size of these disturbances is small when compared to the size of the overall

project areas and to the size of the watersheds, and also will have only a short-term impact. Since Production Unit decommissioning and reclamation activities will be on-going throughout the life of the project, the area to be reclaimed at the conclusion of operations will be reduced, although a slight increase in sediment yields and total runoff can still occur. Since all natural flow within the Proposed Project area is ephemeral with no intermittent or perennial streams, potential impacts to surface water from construction, operations, and decommissioning activities are also limited to uncommon precipitation or runoff events.

A Large Construction General Permit (CGP) will be developed by AUC and will be issued from the WDEQ Stormwater Program. Also, a Storm Water Pollution Prevention Plan Permit (SWPPP) will be developed and implemented with oversight by the WDEQ. This will address all storm water drainage impacts from erosion and sedimentation during Proposed Project construction activities. Wyoming Pollutant Discharge Elimination System (WYPDES) permits will be obtained in accordance with WDEQ-WQD regulations. BMPs will be implemented to reduce impacts in accordance with storm water management plans developed for those permits.

7.1.6.2 Potential Construction Impacts to Groundwater

As noted in NUREG-1910 (GEIS 4.2.4.2.1), the potential for groundwater impacts during construction at ISR facilities is primarily from consumptive groundwater use, the introduction of drilling fluids and muds from well drilling, and spills of fuels and lubricants from construction equipment. The GEIS goes on to state each of these impacts is considered small if best management practices are utilized such as the implementation of a spill prevention and cleanup plan. AUC will implement such a plan prior to any construction activity and commits to using best management practices in all phases of construction activity. However, as discussed in detail in Section 2.7 of this TR, while there is perched water in some of the near surface sands, none of them exhibit the characteristics of an aquifer. Similarly, the Underlying Unit in the Proposed Project area does not exhibit the characteristics of and aquifer. Therefore, there will be no potential impacts on any surficial aquifer or Underlying Unit.

Water quality of the Overlying Aquifer (OA) and Production Zone Aquifer (PZA) at depth should not be impacted during the construction phase. Improperly abandoned boreholes could result in the mixing of groundwater from the PZA with the Overlying Aquifer. AUC development and delineation drilling programs within and adjacent to the Proposed Project area have and will continue to comply with WDEQ/LQD guidelines for borehole abandonment.

Well installation programs also have the potential to impact groundwater quality in the Overlying Aquifer by mixing with PZA groundwater through poor well completion techniques and lack of well integrity. AUC employs on-site geologic oversight during

any drilling project for all phases of well drilling, installation and abandonment. On-site geological supervision would continue during the construction phase to ensure proper well installations. Production wells will pass MIT prior to utilization. Detailed well completion data including WSEO permits, MIT documentation and cement volume calculations will be provided with the wellfield data package in support of the Class III Injection Permit application required by WDEQ/LQD. Based on this evaluation, construction impacts to deeper aquifers are expected to be small.

7.1.7 Potential Ecological Effects of Construction

The Proposed Action will consist of significant features associated with ISR recovery operations including a CPP and ancillary structures, Production Units, pipelines, and other supporting operations infrastructure. The Proposed Project will not control or disturb large expanses of habitat compared to that of conventional uranium recovery methods. Controlled areas located within the Proposed Project area will be minimal at approximately 481 acres or about 8 percent of the total Proposed Project area. Similarly, disturbed areas will be insignificant at approximately 154 acres or about 2.5 percent of the Proposed Project area. All disturbed areas will be reclaimed either at the completion of construction or during decommissioning. Once construction is complete, the disturbance area will be reduced to only that needed to maintain operations. Limited habitat disturbance also results in fewer displaced animals from existing territories into other, potentially occupied, areas, which reduces competition and stress on animals in both locations. There is potential for impacts to terrestrial and avian wildlife from process water and sediment in the lined backup storage pond. As noted in NUREG-1910 (SEIS Section 4.2.5.2), past experience at NRC-licensed ISR facilities has not identified impacts to wildlife from ponds. Therefore, the lined backup storage pond will be fenced to exclude wildlife and if significant avian wildlife deaths are noted then an avian deterrent system will be installed for the pond.

Given the factors outlined above, and the limited use of the Proposed Project area by most vertebrate species of concern, impacts to those species from ISR operations are expected to be small as described below. Mitigation measures designed to prevent or reduce impacts to wildlife are discussed in Section 6.5 of the ER. A detailed description of vegetation, terrestrial wildlife, fisheries, and threatened and endangered species associated with the Proposed Project area is contained in Section 3.5 of the ER.

Much more detailed discussions of potential construction impacts regarding vegetation, wetlands, wildlife, fisheries, raptors, upland game birds, sensitive species, big game mammals, small and medium size mammals, waterfowl and shorebirds, reptiles and amphibians, fish and micro-invertebrates, and threatened and endangered species can be found in Section 4.5.2 of the ER.

7.1.8 Potential Noise Effects of Construction

As discussed in Section 4.3.7.1 of the GEIS, potential noise impacts will be greatest during construction of the CPP because of the heavy equipment involved and given the likelihood that these facilities will be built in rural, previously undeveloped areas where background noises levels are lower. The use of drill rigs, heavy trucks, bulldozers, and other equipment used to construct and operate the production units, drill wells, construct access roads, and build the CPP will generate noise that will be audible above the undisturbed background noises. Noise will likely be higher during daylight hours when construction is more likely to occur and more noticeable in proximity to operating equipment. Administrative and engineering controls will maintain noise levels in work areas below OSHA regulatory limits and, if necessary, additional mitigation will be provided by use of personnel hearing protection. For individuals living in the vicinity of the site, ambient noise levels will return to background levels at a distance greater than 300m (1,000ft) from the construction activities. Wildlife will be expected to avoid areas where noise-generating activities were occurring.

Additionally, as stated in the GEIS, the traffic noise during construction will be localized, limited to highways in the vicinity of the proposed project and access roads within the Proposed Project area. Relative short-term increases in noise levels associated with passing traffic will be small for the larger roads, but could be moderate for lightly traveled rural roads. AUC will enforce site speed limits to further mitigate traffic noise impacts.

Although there are no site-specific noise data for the Proposed Project site, noise information is available from the Lost Creek ISR project in Wyoming, in a license application approved by the NRC. The Lost Creek ISR project is located in a fairly remote part of Wyoming, with areal topographic similarities to the Proposed Project and is comparable in project scale, making Lost Creek an appropriate analog. During construction, ISR projects create noise due to heavy equipment use and wellfield drilling. Drill rigs, heavy trucks, and equipment will generate noise that will be audible on-site above the 30 to 40 dBA of the background noise levels. At Lost Creek ISR the maximum measure of sound pressure (noise) during exploration activities was from a cement mixer and a generator running concurrently, which was 102 dBA, four feet from the source. During construction, occasional instantaneous levels could be somewhat higher. Field observations for the Lost Creek ISR project indicated that drilling activities are inaudible to humans at distances greater that one mile due to topographic interference and other factors (Lost Creek ISR, LLC. 2009).

Table 3.7-2 of the ER compares various noise levels experienced during our daily lives to equivalent sounds. Noise levels at the project site boundary could be as high as 80 dB at times during construction. However this construction activity sound level is less than or

similar to vehicle traffic noise along HWY 387, and will not be a significant potential impact in the area.

Overall, the potential noise impacts of these types of activities will be small given the distance to the nearest residence is approximately 1.5 miles from the center of the Proposed Project area and the proposed construction activities.

Table7-1: Disturbance Calculation

Estimated Production Unit Area Disturbance	Patterns	Area/Pattern (ft^2)	Total Area (ft^2)	Acres
Total Pattern Area per Header House (HH); 67 total	30	10,000	300,000	6.9
Long Term Top Soil Storage (> 6 months)	**Width (ft)**	**Length (ft)**	**Total Area (ft^2)**	**Acres**
Area per Header House	12	30	360	0.01
Proposed Secondary Access Roads to HHs	12	225	2,700	0.06
Long Term Top Soil Storage per HH			3,060	0.07
HH Long Term Top Soil Storage				4.7
Proposed Additional Secondary Roads within Project Boundary	12	18,614	223,369	5.1
Proposed Tertiary Roads (monitor well ring)	8	99,366	794,928	18.2
Total Acres Long Term Disturbance 67 HHs plus Additional New Roads				***28.1***
Short Term Top Soil Disturbance (< 6 Months)	**Width (ft)**	**Length (ft)**	**Total Area (ft^2)**	**Acres**
Well Installation Drill Pit (per pit)(72 total)	7	20	10,080	0.2
Lateral Trenches for pipe from HH to wells	6	5,247	31,482	0.7
Total Area of Short Term Disturbance per HH			***41,562***	***0.95***
Total HH Short Term Top Soil Storage				63.9
Lateral Trunklines to HHs (for 67 HHs)	15	54,269	814,041	18.7
Overlying Monitor Well Installation Drill Pits (134 total)	7	20	18,760	0.4
Ring Monitor Well Installation Drill Pits (469 total)	7	20	65,660	1.5
Total Acres Short Term Disturbance				***84.6***
Estimated Long Term Surface Disturbance (CPP Site Infrastructure)	**Width (ft)**	**Length (ft)**	**Total Area (ft^2)**	**Acres**
Central Processing Plant (CPP)	200	350	70,000	1.6
Backup Pond	100	210	21,000	0.5
Office Building	60	100	6,000	0.1
Maintenance Building	60	100	6,000	0.1
Parking Lot, Chemical Storage Tanks, Laydown area (grading)			570,636	13.1
Total Site Layout			***673,636***	***15.5***
Deep Disposal Well Pad (x4)			174,240	4.0
Total Area of CPP Site Infrastructure Long Term Disturbance			***847,876***	***19.5***
Estimated Short Term Trunkline Top Soil Disturbance (< 6 Months)	**Width (ft)**	**Length (ft)**	**Total Area (ft^2)**	**Acres**
Main Trunklines	25	28,347	708,675	16.3
DDW pipeline	8	32,138	257,104	5.9
Total Area of Short Term Trunkline Disturbance			***965,779***	***22.2***
				Acres
Total Long Term Surface Disturbance				**47.5**
Total Short Term Surface Disturbance				**106.7**
Total Disturbance Area for Removal of Vegetation and Topsoil				**154.3**
				Acres
Total Controlled Area (fenced with or without the removal of topsoil and/or vegetation)				**480.9**
Total Unrestricted Area (all areas outside of controlled area and 2mrem per hour)				**5,576.1**

7.2 Potential Impacts during Operations for the Proposed Action

This section describes the potential environmental impacts of operations of the Proposed Project. Operational activities will include the following:

- Plant and Production Unit operations;
- Ongoing Production Unit construction activities including well drilling, access road construction, installation of pipelines and utilities, and construction of header houses; and
- Groundwater restoration activities as Production Units are removed from production.

Potential environmental concerns from the operation of the Proposed Project are addressed in the following sections: land use impacts, air quality impacts, surface water and groundwater impacts, geologic and soil impacts, archeological resource impacts, noise impacts ecological impacts, and cumulative impacts from existing natural gas pipeline facilities within the Proposed Project area. A more detailed discussion of the potential environmental effects is included in Section 4 of the ER.

7.2.1 Potential Operation Impacts to Land Use

Potential impacts to land use specific to the Proposed Action are expected to be small, and less than those during construction since many of the short-term disturbance areas will be reclaimed. During the operation phase of the project, the primary impacts to land use will occur with Production Unit development. These potential construction related impacts are addressed in Section 7.1.1. Topsoil stockpiles, and as much as practicable of the disturbed Production Unit areas, will be seeded as soon as reasonably possible to establish vegetative cover to minimize wind and water erosion.

7.2.2 Potential Operation Impacts to Socioeconomics

An estimated 38 to 44 people will be required for the operation of the Proposed Project. The exception will be the final year when operations staff will decline to approximately 20. It is assumed that the majority of these personnel will be generated from the 50 mile (80 km) study area, including Gillette and Wright, and to a limited extent, the Casper area. At this time, it is not known how many of the permanent required operations workforce will be hired from outside of the 50 mile (80 km) study area.

<u>Potential Impacts to Demographics</u>

ISR facility operations require a number of specialized workers, such as plant managers, technical professionals, and skilled tradespeople who may relocate from outside the area.

Assuming the entire direct and indirect workforce comes from outside the region of influence, the combined effect of 38 to 44 new persons in the region would constitute less than one percent of the current civilian labor force in Campbell and Johnson Counties. Demographic conditions in Campbell and surrounding counties would not likely change. The impact on demographic conditions would be small.

Potential Impacts to Housing

The Proposed Project lies within commuting distance of Gillette and Wright, both located in Campbell County and within the 50 mile study area. In addition, Midwest, Edgerton, and Casper in Natrona County are within commuting distance. Such workers from these locales will likely commute from their homes. There will be no impact to temporary housing located within commuting distance (an estimated one to two hours) of the Proposed Project.

It is anticipated that few of the work force during any phase of the Proposed Project will purchase or rent housing of any type. Therefore, there will be no effects on the costs of any type of housing in the counties. Because rental housing usually require a long-term lease (generally a minimum of six months), only operations employees will likely enter into this type of lease agreement. Under a hiring scenario that assumes all of the proposed operations workforce will need to relocate to the area, 38 to 44 housing units will be required over the life of the project. In 2010, there were 661 vacant rental units and 209 houses for sale in the seven communities located in the Proposed Project area. Those communities include Gillette, Wright, Sleepy Hollow, Antelope Valley, Kaycee, Edgerton and Midwest. Most of the available units were in Gillette. In addition, the Casper area, which is approximately 63 miles southwest from the Proposed Project site, has considerable housing available. In 2010, Natrona County (including Casper) had 921 vacant rental units and 370 houses for sale. Because the Proposed Project lies within commuting distance of Casper, the impact on the housing market in the area is expected to be minimal.

It appears there is sufficient available housing stock in the 50 mile study area and in nearby Casper to accommodate new residents taking jobs directly or indirectly related to the Proposed Project. Thus, impact to housing should be small.

Potential Impacts on Schools and Public Services

Based on 2010 U.S. Census Bureau statistics, the average household size in Wyoming is 2.42 persons. Thus the projected increase of 38 to 44 during the operations phase for the Proposed Project could result in a total population increase of 106 persons. This assumes all of the jobs are filled with persons not already living in Wyoming.

Assuming the average household size is 2.42 persons a conservative estimate for the number of school-aged children that would relocate would be 38 to 44 children. Comprising various ages and spread across schools and classrooms in surrounding counties (kindergarten and grades 1 through 12). This small number of children would not likely have a noticeable effect on student-to-teacher ratios.

Currently, each of the schools within the 50 mile study area has some capacity for additional students, with the exception of the Kaycee Schools and the elementary school in Wright. Though the Campbell County School district is experiencing significant growth in student numbers, district officials are working to accommodate the anticipated influx of new students (Strahorn 2011). Schools and education-related service impacts during the ISR facility operations would be Small.

A total increase of 106 people to the total population of 50 mile study area is not likely to create a significant impact on other public services such as fire, police, water, and utilities. Actual population increases as a result of the Proposed Project are anticipated to be less than discussed here because not all jobs will result in new residents within the study area.

Potential Economic Impact

Campbell County would receive some tax revenue during ISR facility operations. Personal property tax would be applied to the value of all equipment used by the Proposed Project. In addition, a state mineral severance tax would be applied to the extracted uranium; however, this tax would not be directly returned to Campbell and County. A county *ad valorem* tax for production would also contribute to local government revenue. Indirectly, the counties would benefit from increased sales tax revenue from the increased number of workers relocating to the area and from increased demand for goods and services. The tax-revenuerelated impact from ISR facility operations on local taxing jurisdictions in Campbell County would be small.

7.2.3 Potential Operation Impacts to Historic, Scenic and Cultural Resources

7.2.3.1 Potential Historic and Cultural Impacts

Potential direct and indirect adverse effects on potentially NRHP-eligible historic properties, traditional cultural properties, and paleontological materials are possible during the operation phase of the Proposed Project. Potential impacts during operation will result primarily from maintenance and repair of existing facilities.

Potential inadvertent impacts to historic and cultural resources located within the Proposed Project area and other cultural landscapes that are identified before construction

are expected to continue during operation. AUC's Unanticipated Discovery Plan (UDP) will prevent potential impacts to cultural resources. A stop-work provision will be implemented if any previously undiscovered cultural resources are encountered during construction and operations including site decommissioning. Overall, impacts to cultural and historical resources during operations will be expected to be less than those during construction, as operations are generally limited to previously disturbed areas (e.g., access roads, central plant area, and production unit). Implementing the mitigation measures mentioned above and discussed in detail in Section 6.8 of this ER will reduce potential impacts to cultural resources during the operations phase of the Proposed Project to small.

7.2.3.2 Potential Scenic Resources Impacts

Potential impacts to the visual resources during operations will result from the presence of infrastructure associated with the Proposed Project operations including the CPP and ancillary structures, header houses, and associated infrastructure such as wellhead covers, access roads, and overhead utilities. Some of the facilities and Production Unit activities will be visible from the county roads within and near the Proposed Project area including the Highway 387 and Clarkelen Road.

Although the CPP and ancillary structures are located in one area, they will be more noticeable to the casual observer because of their size. The CPP will be the largest structure, at approximately 200 feet wide by 350 feet long by 50 feet tall (70,000 $ft^{2)}$. The total plant area will occupy a space of approximately 15.5 acres and enclosed with security fencing. In addition, one backup storage pond (approximately 0.5 acre) will be separately enclosed in a 1.2 acre area with fencing to exclude wildlife. These facilities will be prominent in the foreground and middle ground views and will be silhouetted in the background view from public access points. TR Figure 3-1 shows the proposed locations of the CPP, Production Units, and access roads.

Pipelines and electrical lines between the injection and recovery wells and header houses will be buried and disturbed areas restored and reseeded. Each header house is a small (360 square foot) single story metal building with a basement or sump. A disturbance area around each header house is necessary to provide an adequate area for operations and maintenance vehicles to turn around. There will be approximately 67 header houses within the Proposed Project area. Electrical distribution lines (typically overhead) will connect header houses to existing electric distribution lines. The distribution poles will be approximately 20 to 40 feet high and wooden so that the natural color harmonizes with the landscape. Injection and recovery wells will have a wellhead cover that typically consists of a weatherproof structure placed over the well. These covers are approximately three feet high and two feet in diameter. The covers would present only a slight contrast with the existing landscape.

The CPP and other structures supporting operations will be noticeable from certain public vantages; however, they will not be the only prominent industrial features in the area. Within the Proposed Project area, there is currently one natural gas compressor station visible from Clarkelen Road. Portions of the compressor station are painted to blend with the surrounding environment are not as easily discerned as those painted white or dark brown. In addition, solid geometric features such as storage tanks, pump jacks, maintenance buildings, power lines, and meter houses are prominent in the immediate foreground and often are noticeable in the foreground views by the casual observer.

Despite existing visual impacts from existing development and the average scenic quality rating for the Proposed Project area, AUC intends to implement measures to lessen the visual impact from the project. Mitigation measures are meant to minimize adverse contrasts of project facilities with the existing landscape. The measures should be applied to all facilities, even those that meet VRM objectives. Mitigation will enable Proposed Project facilities to harmonize with the surrounding landscape to the extent practicable.

Mitigative measures for visual and scenic resource impacts during operation are discussed in ER Section 6.9. All installed structures will be painted with low reflectivity paint in colors that harmonize with the surrounding landscape. In addition, several design techniques will be implemented to minimize the visual contrasts. Those methods include reducing unnecessary disturbance by using the same trench for multiple utilities, reducing the area of temporary disturbance by designating equipment parking areas during construction, and following areas of existing disturbance when considering utility placement. To the extent possible, topographic features will be used to screen plant facilities and roads from public view. Roads may be aligned with the contours of the topography, although this measure may result in a greater area of disturbance. Thus, the potential visual impacts during operations will be small.

7.2.4 Potential Operation Impacts to Air Quality

ISR facilities are not major point source emitters and are not expected to be classified as major sources under the operation (Title V) permitting program. Other potential emissions during operations include fugitive road dust and diesel combustion engine emissions from equipment, transport trucks, and other vehicles. For NAAQS attainment areas, it is expected that air quality impacts would be small.

During operations of the Proposed Project, impacts to air quality will be less than the impacts from construction because the use of diesel-powered construction equipment would be reduced and therefore pollutant levels will remain low. It is anticipated that the site-specific conditions at the Proposed Project are comparable to those described in the GEIS for air quality and incorporates by reference the GEIS conclusions that the impacts to air quality during operations will be small.

Site specific operational potential air quality impact values, culminated along with the potential construction impacts, are discussed further in Section 4.6. Impacts that are more directly tied to operations are further outlined below.

7.2.4.1 Potential Radiological Emissions

As a result of employing pressurized, down-flow ion exchange columns, the primary source of radiological gaseous emissions will be ^{222}Rn gas from occasional venting of injection wells, small unavoidable leaks in production units and ion exchange equipment, resin transfer operations, water discharge to the lined backup storage pond, and maintenance of production unit and ion exchange equipment. Radon, a decay product of ^{226}Ra, is dissolved in the lixiviant as it travels through the ore to a recovery well where it is brought to the surface. Since the project will use fixed bed pressurized down flow ion exchange columns to recover uranium from the pregnant lixiviant and to treat restoration solutions and since production units will be closed and operated under pressure, the majority of ^{222}Rn contained in the recovery solution will stay in solution and will not be released to the atmosphere. The concentration of ^{222}Rn in the production solution and estimated releases are calculated using the methods found in NRC NUREG 1569 Appendix D. The only expected routine emission at the facility will be ^{222}Rn gas.

It is not anticipated that there will be potentially significant impacts from radiological particulate emissions from the CPP and facility operations. The components to be used in yellowcake systems operations emit zero particulates in the drying and packaging. All other aspects of the operation are fluid based, with little chance of radiological particulate emissions.

7.2.4.2 Potential Non-Radiological Emissions

AUC estimates fugitive dust emissions from operations in the Proposed Project area based on projected activity levels and using emission factors supplied by the WDEQ. Projected activities impacting dust emissions included ongoing production unit construction activities, routine site traffic related to operations and maintenance, heavy truck traffic delivering chemicals and material and shipping product, and employee traffic to and from the site. Based on these activities, the projected total particulate matter (PM_{10}) emissions will be less than 200 tons per year. This level of emissions is small relative to surface mines and other industrial operations that generate dust from vehicles and disturbed areas. The larger surface mines in the PRB show PM_{10} emissions inventories in the thousands of tons per year. Sections of unpaved county roads can also exceed 18.5 tons per year emission rate. Atmospheric dispersion modeling generally shows that fugitive PM_{10} emissions on the order of less than 200 tons per year result are an insignificant impact to ambient air beyond a distance of a few hundred yards from the sources. 40 CFR 51.165(b)(2) defines the Significant Impact Level (SIL) for PM_{10} as 1.0

μg/m^3 or more. For reference purposes, 40 CFR 50.6(a) defines the national ambient standard for annual average PM_{10} as 150 μg /m^3.

It is important to note that no control factors were assumed for the emission calculations. This is a conservative effect resulting in overestimation of dust generation as periodic watering or chemical treatment of the unpaved roads will reduce emission factors by half or more.

7.2.5 Potential Operation Impacts to Geology and Soils

Potential geological impacts could only occur during construction and decommissioning, when relatively minor, temporary disturbance will occur near the soil surface. NUREG-1748 notes that geological resources are more likely to exert an impact than be impacted by the Proposed Action. The main probable geologic hazard present in Wyoming is earthquakes.

Section 2.6.5 describes the seismic hazard of the Proposed Project area. This section describes how there are no active faults with surface expression in or near the Proposed Project area. Earthquake probabilities and consequences are discussed in Section 3.3, including current earthquake probability maps that are used in the newest building codes (2,500 year maps), which suggest a scenario that will result in moderate damage to buildings and their contents. The probability-based worst-case scenario could result in an Intensity VII earthquake in the area of the Proposed Project. In intensity VII earthquakes, damage is negligible in buildings of good design and construction, slight-to-moderate in well-built ordinary structures, considerable in poorly built or badly designed structures such as unreinforced masonry buildings. The proposed CPP and associated structures will be built to withstand an intensity VII earthquake.

The 2,500-year probabilistic map presented in TR Addendum 2.6C-6 shows that the peak ground acceleration with a 2% probability of exceedance in 50-years is 10 to 12 percent/g, which equates to a Level IV earthquake. Level VI earthquakes are felt by almost everyone around but do not cause significant damage. Since structures at the Proposed Project will be designed according to the 2,500-year probabilistic map, the risk of significant earthquake damage to the proposed facilities is small, as the total anticipated project life is approximately 16 years.

7.2.5.1 Potential Geology Impacts

Potential geological impacts from operations are highly unlikely and expected to be small. No significant matrix compression or ground subsidence is expected, as the net withdrawal of fluid from the target sandstone during operations and restoration will be on the order of one percent or less. Further, once ISR and restoration operations are

completed, groundwater levels will return to near original conditions under a natural gradient.

As previously mentioned the primary geologic hazard to the facility is that from earthquakes, which could potentially damage a pipeline, process vessel, chemical storage tank, or the lined backup pond and cause a contaminant release. Since the low probability of an earthquake occurring in the relatively short project schedule and that the CPP building will be designed according to the 2,500-year probabilistic map, the risk of contaminant release from an earthquake is very small.

7.2.5.2 Potential Soils Impacts

Potential impacts to soils from operations are more likely than geological impacts but are still expected to be small. The three most likely potential impacts are:

- Soil compaction;
- Leakage or spills of lixiviant; or
- Erosion by wind and water.

Soil Compaction

During operation, potential soil impacts could occur from compaction, especially vehicles driving on wellfield access roads. Soil compaction could occur on all access roads, but potential impacts would be most noticeable on tertiary access roads, which will typically be unconstructed, 2-track roads without gravel surfacing. These roads will be used throughout operation for monitor well sampling and MITs. Compaction will be mitigated by ripping tertiary roads during reclamation and importing topsoil if needed during decommissioning.

Leakage or Spills

During operation, there will be additional soil contamination risks that require specific mitigation measures. These include potential spills from pipelines, header houses, and process vessels. Process monitoring of wellfields and pipelines in the Production Units will detect leaks or spills of lixiviant. Process monitoring will include continuous measurement of flows and pressures for injection and recovery trunklines and feeder lines, inclusion of leak detection sensors in valve manholes, and inclusion of leak detection sensors in well head sumps.

Engineering controls will ensure that there is minimal potential impact to soil from the inadvertent release of process fluids or chemicals within the CPP area. Within the CPP area, potential releases of process fluids or chemicals to the environment include leaking pipelines, leaking chemical storage tanks or process vessels, transportation accidents, or

leaking backup pond. The first level of protection is primary containment within pipelines, vessels, ponds, etc., all of which will be leakage tested during construction. The second level of protection is secondary containment. Secondary containment will be provided in the form of curbs, berms, and sumps for chemical storage tanks, process vessels, and all piping and equipment inside the CPP building. A double liner and leak detection system will also be provided for the backup pond within the CPP area.

Water and Wind Erosion

The CPP is underlain by soils with Small to Moderate risks for wind and water erosion. The soils underlying the Proposed Production units are at a Small to Large short term risk of wind erosion and Small to Moderate risk of erosion from water. Though no topsoil will be stripped from the Production Units, construction may result in an increase in the erosion hazard from both wind and water due to the removal of vegetation and the physical disturbance by heavy equipment. Mitigation measures for potential soil impacts are described below and in Section 6.3.2 of this document.

Soil erosion mitigation will be implemented in accordance with WDEQ/LQD Rules and Regulations, Chapter 3, Environmental Protection Performance Standards, consistent with other licensed ISR facilities in Wyoming. Erosion protection measures that may be implemented at the Proposed Project may include the following:

- Temporary diversion of surface runoff from undisturbed areas around the disturbed areas and the use of water velocity dissipation structures;
- Retaining sediment within the disturbed areas through the use of BMPs such as silt fencing, retention ponds, or other effective means; and
- Salvage and stockpiling of topsoil from the CPP areas and from secondary production Unit access roads in a manner to avoid wind and/or water erosion.

7.2.6 Potential Operation Impacts to Water Resources

7.2.6.1 Potential Surface Water Impacts

During operation, there are few surface disturbing activities, and vegetation will have been re-established in previously disturbed construction areas. Therefore, the potential water quality impacts from sediment transport will be much lower during operation than during construction. Since new Production Units will continually be constructed during operation, sediment control BMPs will continue to be implemented to ensure that potential sediment transport and related surface water impacts remain small.

Prior to operation, AUC will apply for a WYPDES Storm Water Permit and as such prepare a SWPPP that describes erosion and sediment controls along with operational

controls. Part of the WYPDES permit requirements will be written into the SWPPP, ensuring qualified AUC personnel will implement storm water BMPs and obtain discharge samples to ensure compliance with effluent limitations.

Surface facilities including the CPP, Production Units, access roads, pipelines, will not significantly change peak surface water flows. This is due to the topography of the drainages at the site and the low regional precipitation and the absorptive capacity of the soils in the Proposed Project area. In areas where these structures may affect surface water drainage patterns, diversion ditches, and culverts will be used to prevent excessive erosion and control runoff. In areas where runoff is concentrated, energy dissipaters are used to slow the flow of runoff to minimize erosion and sediment loading in the runoff.

Surface water quality could potentially be impacted by exceptional circumstances such as excessive rainwater or runoff in impacted soil areas, or an accidental release of process liquids due to a CPP or Production Unit spill. Section 6.4.2.2.7 of this ER presents a discussion of the measures to be used to prevent, control, and remediate Production Unit spills. Process buildings and chemical storage areas will be constructed with sumps and secondary containment berms/curbing. A regular program of inspections and preventive maintenance will be implemented.

7.2.6.2 Potential Ground Water Impacts

During uranium recovery operations, potential impacts to groundwater may result from spills and leaks, excursions, wellfield development drilling, and deep well injection. A number of factors limit the potential for these impacts, including natural conditions, regulatory oversight and final restoration of the exempted aquifer. Natural conditions that limit impacts include geologic isolation of the mineralized sandstones, which results in the hydraulic confinement within the mineralized intervals. A second factor limiting the potential for impacts lies in the amount of regulatory oversight required to recover uranium via these methods. Regulated techniques for ISR operations, including well construction, MIT, Production Unit pump tests, UCLs for highly mobile constituents to provide “early warning” of potential excursions, extensive monitor well systems, and wellfield balance and bleed, have evolved to the point where these procedures complement and enhance the above-noted naturally occurring conditions to provide ongoing, iterative mitigation measures with the flexibility to adjust to site-specific conditions in order to protect adjacent sources of drinking water. Finally, restoration of the exempted aquifer following operations provides a third significant factor limiting the potential for impacts.

Potential Operation Impacts to Surficial Groundwater Quality

No near-surface or Surficial Aquifer exists on the Proposed Project, as is described in Section 2.7 of the TR. As a result, the first aquifer that potentially could be impacted by

spills of lixiviant or other process fluid is the Overlying Aquifer (OA), which the top ranges from 70 to 155 feet below ground surface. Because the Overlying Aquifer is overlain everywhere across the Proposed Project by a continuous mudstone (See TR Section 2.6), the potential of construction activities to create an impact to groundwater is small.

Potential Operation Impacts to Groundwater Quality of OA and PZA

During operations, the groundwater quality in the production zone exempted aquifer will be impacted as part of the ISR uranium recovery process. Uranium in the ore zone will be oxidized and mobilized by introducing lixiviant into the PZA through the Class III injection wells. In addition to the uranium other constituents will be mobilized, including redox sensitive trace metals. Impacts to the exempted aquifer water quality will be short term, since groundwater restoration will take place in a phased manner with uranium recovery.

Excursions of lixiviant at ISR facilities have the potential to impact adjacent, non-exempt aquifers with constituents that have been mobilized by the ISR process. These excursions may be classified as horizontal or vertical. A horizontal excursion is a lateral movement of processing solutions outside the subsurface recovery zone of the ore-body aquifer to a monitor well. A vertical excursion is a movement of solutions into an overlying aquifer monitor well (there being no underlying aquifer at the Proposed Project).

Potential impacts to groundwater from the proposed lixiviant result from:

- Addition of sodium bicarbonate and or carbon dioxide and oxidant to the groundwater;
- Addition of chloride to the groundwater by the proposed CPP; and
- Interaction of these chemicals with the mineral and chemical constituents of the Production Zone Aquifer (PZA) being milled. The result is that during the ISR operations, the concentration of some of the naturally occurring dissolved constituents in the PZA will be higher than prior to ISR operations.

According to NUREG-1910 (GEIS, Supplement 3, Section 4.5.2.1.2.2), excursions have occurred at ISR operating facilities. Following analysis of 60 events by NRC staff, most excursions were controlled through pumping and extraction of nearby wells. *In all cases, however, none of these excursions resulted in environmental impacts to adjacent aquifers* (NRC Report to Commission, 2009).

Potential groundwater quality impacts in adjacent non-exempt aquifers from ISR activities are related to the identification, control, and clean-up of excursions. During production, injection of the lixiviant into the Production Unit results in a temporary degradation of water quality compared to pre-operational conditions. Movement of water

out of the recovery area to a monitor well, as demonstrated by an exceedance of UCL constituents is an excursion. Past experience from other commercial scale ISR projects in the PRB has shown that with proper steps in monitoring and operating a production unit, excursions, if they do occur, can be controlled and recovered through adjustment of the water balance and bleed, such that impacts to groundwater quality are prevented.

No stock or drinking water wells will be located in the currently proposed ISR operation areas and will not be completed in the ore bearing aquifer where production will occur. If future development includes an area(s) where a stock well is located in an ISR production aquifer, AUC commits to the following measures:

- Replacing the wells with new wells completed in either shallower or deeper sands that are not impacted by ISR operations; or
- Providing another source of stock water.

With proper Production Unit balance, ISR operational fluids can be controlled and confined to the PZA until restoration efforts are employed to cease and reverse the oxidation process. As a result, no impacts are anticipated in PZA or OA water quality.

Potential Operational Impact on Groundwater Quantity

AUC will process up to 11,000 gallons per minute in the Proposed Project CPP for uranium recovery operations. During the short period when only production is occurring prior to the commencement of restoration, the bleed will average up to 1 percent of the lixiviant flow from the Production Units. An average production bleed rate of 1 percent has been successfully used during ISR operations at other ISR facilities, and its appropriateness is demonstrated by the ground water model in Section 2.7 of the TR. During the concurrent production and restoration phase, the average total bleed will rise to as much as 1.2 percent of the lixiviant flow from the Production Units. Thus, water consumption during production and restoration will be slightly higher than during production alone.

As demonstrated by the groundwater model, the potential impact from consumptive use of groundwater is expected to be small. Potential impacts on groundwater due to consumptive use outside of the Proposed Project area are expected to be negligible.

The numerical groundwater flow model which is included as TR Addendum 2.7-C indicates that an average production bleed rate of one percent will be sufficient to maintain an inward gradient in both the fully and partially saturated portions of the PZA during uranium recovery operations. Also, as demonstrated from the numerical groundwater flow model, the amount of consumptive use during all phases of the Proposed Project will generate negligible drawdown outside of wellfield areas. As a result, no potential impact to other users of groundwater in the area is expected since there is minimal use of groundwater in the recovery zone sands near or adjacent to the

wellfield areas. For the same reasons, no potential impacts to water users outside of the Proposed Project boundary are expected.

To assess the impacts from ISR operations and restoration operations on local groundwater, background water levels will be measured in the private domestic or livestock water wells surrounding the project area before ISR operations and every three months during operations;

If significant impacts to either the adjacent domestic wells or to stock wells in the vicinity of the Proposed Project are observed (e.g., water levels drop to a point that impairs the usefulness of the wells), the following mitigation measures will be considered:

- Lowering the pump level in the wells, if possible;
- Deepening the wells, if possible; or
- Replacing the wells with new wells completed in sands that are not impacted by ISR operations.

Potential Operation Impacts to Groundwater from Deep Disposal Wells

AUC proposes to utilize up to four Class I Deep Disposal Wells within the Proposed Project area. The Class I UIC permit application for the Proposed Project can be found in TR Addendum 4-B.

The wells will target the Cretaceous Teapot and Parkman sandstones at depths of approximately 7,450 to 8,390 feet BGS. The target interval is overlain by the Lewis Shale which is a low-permeability marine shale with a thickness of approximately 850 feet at the Proposed Project. The Teapot and Parkman sandstones are underlain by the Steele Shale. The Steele shale is low-permeability marine shale member within the massive Cody Shale. The Fox Hills sandstone and Lance Formation overlie the Lewis Shale. The Fort Union and Wasatch Formations overlie the Lance Formation. The strata from the Fox Hills sandstone through the Wasatch Formation have the potential to be a USDW.

Water samples from nearby producing oil wells completed within the Parkman have a total dissolved solids (TDS) concentration of greater than 10,000 mg/l. The potential impacts to adjacent aquifers from injection into the deep disposal wells are negligible since the intervals are confined and located at least 500 feet below the deepest USDW.

7.2.7 Potential Operation Impacts to Ecological Resources

Operation activities may directly and indirectly impact ecological resources within the Proposed Project area. Activities related to the operation of the Proposed Project may impact ecological resources by altering the habitat, displacing wildlife through human activity, and through direct and indirect mortality.

Access to the CPP area and portions of Production Units will be controlled and limited by fencing. Collisions with wildlife may occur by employees on-site or off-site and by trucks making shipments to and from the facility. Since most potential ecological impacts are caused by surface disturbance, potential impacts from operation would be much less than potential construction impacts. During operation the soils within the Proposed Project area may become temporarily contaminated or altered due to unexpected operational leaks and spills. This could potentially impact vegetation in affected areas.

During the operation phase noise and vehicular activity will be reduced within the Proposed Project area. The majority of vehicular activity will be limited the primary access roads, Highway 387 and Clarkelen Road. The decreased vehicular traffic should decrease the risk of vehicular collisions and reduce noise, which will reduce disruptions to wildlife populations. In general these impacts will be small in nature beyond those from construction.

7.2.8 Potential Operation Impacts to Noise

The proposed CPP site will be located approximately 2.2 miles from the closest residence located near the Proposed Project area. The rest of the Proposed Project area is primarily open rangeland. Other land uses include natural gas pipeline facilities, as well as pastureland located to the east, north and west of the project area.

Assuming that the noise level produced by unshielded machinery at the plant site is 85 dB at 50 feet, the sound pressure level attained at the project boundary will be below the level identified by the EPA as suitable for outdoor areas where human activity takes place (approximately 55 dB). A level of 85 dB is the OSHA threshold at which a hearing conservation program at the plant will be required. Experience at operating ISR facilities verifies that this assumption is conservative and that the average sound pressure levels during construction will be less than 85 dB. After appropriate engineered controls (i.e. the protective enclosure for the equipment) are installed, noise levels will not impact the residences, and are unlikely to approach the levels attained by State Highway 387.

The potential noise impacts during operation are expected to be less than those during construction due to the smaller work force, reduction of earthmoving and construction activities on site, and the reduced number of shipments of materials and equipment.

As a result of the remote location of the Proposed Project and the low population density of the surrounding area, potential impacts from noise or congestion within the Proposed Project area or in the surrounding two mile area are not anticipated. Additionally, given the maximum increase in population due to migrant workers is insignificant, noise and congestion impacts are not anticipated in Campbell County or other neighboring counties.

7.3 Radiological Effects

An assessment of the potential radiological effects associated with the proposed ISR facility operations must consider the types of emissions, the potential radiation pathways present to humans, and an evaluation of the consequences of emissions of radioactive materials.

The facility will use fixed bed pressurized down-flow ion exchange columns to separate uranium from the pregnant production fluid, and to treat restoration solutions. The uranium contained in the eluant from the production ion exchange columns will be precipitated and vacuum dried.

In addition to ion exchange, the groundwater restoration process will use reverse osmosis to remove dissolved solids. Liquid effluent disposal will be via deep well injection. No evaporation ponds are planned at this time. A backup storage pond will be available for temporary storage, in the event disposal wells are inoperable for a period of time.

Since the drying and packaging operation is conducted under vacuum, the only expected routine emission at the facility will be ^{222}Rn gas. Radon, a decay product of ^{226}Ra, is dissolved in the lixiviant as it travels underground through the ore to a production well where it is brought to the surface. Radon may be released during several steps in the project. Concentrations of ^{222}Rn in the production solution and estimated releases are calculated using the methods found in USNRC Regulatory Guide 3.59. Details and assumptions used in those calculations are presented in Appendix C.

7.3.1 Exposure Pathways

Airborne ^{222}Rn represents the dominant radionuclide and pathway for impacts on humans and the environment from operation of this proposed facility. As a noble gas, ^{222}Rn has very little radiological impact on human health or the environment; its decay products are the risk elements. Radon has a relatively short half-life (3.8 days); its decay products are short lived, alpha emitting particulate radionuclides. The impact of the decay products depends upon air concentration and exposure duration. Typical radiological exposure pathways are shown on Figure 7-1.

<u>Exposures from Water Pathways</u>

The liquid effluent will be managed in the deep disposal wells as discussed in Section 4 of the ER. The deep disposal wells will permanently dispose of liquid 11e.(2) byproduct material and will be permitted under a Class I UIC Permit issued by the WDEQ. No routine liquid environmental discharges, other than 11e.(2) byproduct material disposal via deep well injection, are planned and as such, no definable water related pathways for

routine operations exist. There are no potential non-radiological impacts to public health expected due to liquid effluents from the Proposed Project.

As discussed in Section 4 of the ER, excursions of lixiviant at ISR facilities have the potential to impact adjacent aquifers with radioactive and trace elements that have been mobilized by the ISR process. However, according to NUREG-1910 (SEIS, Supplement 3, Section 4.5.2.1.2.2), following analysis of 60 events by NRC staff, most excursions were controlled through pumping and extraction of nearby wells. In all cases, however, none of these excursions resulted in environmental impacts.

Exposures from Air Pathways

Gaseous and airborne effluent will consist of air ventilated from the plant building, and vented from process vessels and tanks. Gaseous emissions and airborne particulates from the Proposed Project are summarized in Section 3.6 of the ER.

AUC will utilize vacuum dryers in its ISR yellowcake drying process. According to NUREG-1910 (GEIS Section 2.4.2.3), vacuum dryers have several advantages especially with regard to controlling the process and potential yellowcake dust emissions. The GEIS section is specific in stating that a vacuum dryer heating system is isolated from the yellowcake; no radioactive materials are entrained in either the heating system or its exhaust.

The gaseous and airborne effluents will not contain any non-radiological hazardous effluents. Nonradioactive airborne effluents at the site will be limited to fugitive dust from access roads and production unit activities. Fugitive dust emissions will be minimal, as estimated by air quality modeling discussed in Section 4.6 of the ER. Dust suppressants will be used if conditions warrant their use, however, dust suppressants were not considered for the air emissions calculations. Air quality impacts of operation of the Proposed Project are discussed in detail in ER Section 4.6.

7.3.2 MILDOS -AREA

MILDOS-AREA is used to model radiological impacts on human and environmental receptors using facility-specific ^{222}Rn release estimates, meteorological and population data, and other parameters. The estimated radiological impacts resulting from routine site activities may be compared to applicable public dose limits and naturally occurring background levels. MILDOS (ANL, 1989) was originally developed to estimate doses from conventional uranium milling operations, including large area releases such as ore storage pads and tailings beaches. Inputs to the dose are limited to uranium decay chain radionuclides. MILDOS subsequently was updated in 1998 to address potential impacts of uranium at situ recovery (ISR) operations. ISR-specific types of source terms, such as

production wells and restoration wells are included in the updated version. Modeling assumptions and parameters are addressed below.

Nature of Problems Solved by MILDOS-AREA

The MILDOS-AREA computer code calculates the radiological dose commitments received by individuals and the general population within a 50 miles (80 km) radius of a uranium recovery facility. In addition, air and ground concentrations of radionuclides are estimated for individual locations, as well as for a generalized population grid. Extra-regional population doses resulting from transport of ^{222}Rn, and export of agricultural produce, are also estimated.

The transport of emissions from point and area sources is predicted with a Gaussian plume dispersion model. Mechanisms such as radioactive decay, plume depletion by deposition, ingrowth of decay products, and resuspension of deposited radionuclides are included in the transport model. Alterations in operation throughout the facility's lifetime can be accounted for using the input variable stream.

Exposure Pathways and Dose Conversion Factors Considered by MILDOS

The pathways considered for individual and population impacts are:

- Inhalation;
- External exposure from ground concentrations;
- External exposure from cloud immersion;
- Ingestion of vegetables;
- Ingestion of meat; and
- Ingestion of milk.

Doses are calculated via dose conversion factors. Those in MILDOS-AREA are ultimately based on the recommendations of the ICRP. These factors are fixed internally in the code.

Source Description

Radionuclide releases are defined for each source for particulates and ^{222}Rn. The uranium decay chain is assumed to be the only significant source of radiation for uranium milling operations. The contribution from the ^{235}U chain is less than 5 percent of that from the ^{238}U chain. Particulate releases are defined to include the radionuclides ^{238}U, ^{230}Th, ^{226}Ra and ^{210}Pb.

Gaseous releases are defined for ^{222}Rn, with ingrowth of short-lived decay products also considered. For ^{222}Rn, these decay products include ^{218}Po, ^{214}Pb, ^{214}Bi, ^{210}Pb and ^{210}Po.

The dosimetry model accounts for releases and ingrowth of other radionuclides by assuming secular equilibrium.

The time history of release for each source is defined for the life of the Proposed Project and the post-operational period. Typically, a uranium production facility will operate for a period of years, during which there will be ^{222}Rn and, for some facility types, particulate releases.

Atmospheric Transport and Diffusion

Emissions of radioactive materials from different sources are modeled with a sector-averaged Gaussian plume dispersion model, which utilizes user-provided wind frequency data (including wind speed and dispersion category characteristics). Mechanisms such as deposition of particulates, resuspension, radioactive decay and ingrowth of decay-products radionuclides are included in the transport model. The model computes annual average air concentrations of radionuclides and then uses the results to compute impacts to humans through various pathways.

Ground surface concentrations are estimated from depositional buildup and ingrowth of radioactive decay products. The surface concentrations are modified by radioactive decay, weathering, and other environmental processes. The MILDOS-AREA code allows the user to vary the emission sources as a step function of time by adjusting the emission rates, which includes shutting them off completely. Thus, the results of a computer run can be made to reflect changing processes throughout a facility's operational life.

7.3.2.1 Site Specific Inputs

The MILDOS-AREA program was provided with a 12-month stability array (STAR) file of meteorological data collected onsite, for the calculations reported here. The data provided were collected as part of the baseline monitoring program onsite. The meteorological data that was used in the MILDOS analysis is described in TR Section 2.5. Additionally, the population data from TR Section 2.3 was used in the MILDOS analysis to calculate population doses within 50 miles (80 km). The MILDOS model report in Addendum 7-A contains a more detailed discussion of the Proposed Project site specific inputs, receptor locations, results, and all tables and figures discussed in this section. In addition, the MILDOS report presents and an example MILDOS output showing details of one of the ten MILDOS runs used to develop the information presented below. Copies of the other MILDOS output files are available upon request.

7.3.2.2 Source Term Estimates

The source terms used to estimate ^{222}Rn releases from the facility include three well fields in production, three restoration well fields, new well field development, and operation of the CPP. The parameters used to characterize and estimate releases are provided in Table 3 of the MILDOS report in Addendum 7-A.

Production Releases

Currently, AUC plans to develop 12 Production Unit areas, with some potentially under production concurrently. Table 1 of the MILDOS report presents the production schedule used to develop ^{222}Rn release estimates. The potential ^{222}Rn releases from the production well fields were estimated using methods described in USNRC Regulatory Guide 3.59*, Methods for Estimating Radioactive and Toxic Airborne Source Terms for Uranium Milling Operations* as follows (NRC, 1987):

The ^{222}Rn released to production fluid from leaching is calculated using Equation 1:

$$G = R\rho E \frac{(1-p)}{p} x10^{-6} \qquad \text{(Equation 1)}$$

Where:

G	=	^{222}*Rn released (Ci/m^3)*
R	=	^{226}*Ra content of ore (pCi/g)*
E	=	^{222}*Rn emanating power*
ρ	=	*rock density (g cm^{-3})*
p	=	*formation porosity*

The yearly ^{222}Rn released to the production fluid is calculated using Equation 2:

$$Y = 1.44GMD(1 - e^{-\lambda t}) \qquad \text{(Equation 2)}$$

Where:

Y	=	*yearly* ^{222}Rn *released to production fluid (Ci yr-^{1})*
G	=	^{222}*Rn released at equilibrium (Ci m^{-3})*
M	=	*lixiviant flow rate (L min^{-1})*
D	=	*production days per year (d)*
λ	=	^{222}*Rn decay constant (0.181 d^{-1})*
t	=	*lixiviant residence time*
1.44	=	*unit conversion factor*

Using Equations 1 and 2 and the MILDOS input parameters presented in the MILDOS report, the yearly ^{222}Rn releases to production fluid were calculated and are presented in the Addendum.

Restoration Releases

Radon releases resulting from wellfield restoration activities were estimated in the same manner as the production activities above (using Equation 2), modified for the restoration flow rate and the restoration fluid residence time. Addendum 7-A presents the resulting release estimates.

New Production Unit Releases

Radon releases resulting from new Production Unit development activities were estimated using methods described in NUREG-1569*, Standard Review Plan for In Situ Leach Uranium Extraction License Applications* as follows (NRC, 2003):

$$Rn_{nw} = EL[Ra]TmNx10^{-12} \qquad \text{(Equation 3)}$$

Where:

Rn_{nw}	=	*^{222}Rn release rate from new well field (Ci yr^{-1})*
E	=	*emanating power*
$[Ra]$	=	*concentration of ^{226}Ra in ore (pCi g^{-1})*
L	=	*decay constant of ^{222}Rn*
T	=	*storage time in mud pit (d)*
m	=	*average mass of ore material in the pit (g)*
N	=	*number of mud pits generated per year*
10^{-12}	=	*unit conversion factor (Ci pCi^{-1})*

Using Equation 3 and the parameters in the MILDOS report, the yearly ^{222}Rn released from new wellfield development was calculated. Results are presented in the Addendum.

Other Radon Releases

Radon releases resulting from other production process were estimated using methods described in NUREG-1569*, Standard Review Plan for In Situ Leach Uranium Extraction License Applications* (NRC, 2003). The resulting release estimates are presented in the MILDOS report.

Radon Release Summary

A summary of all estimated ^{222}Rn releases is presented in the MIDOS report.

Receptors

The receptor locations selected for the MILDOS-AREA simulations are presented in Figure 3 of the MILDOS Report. The metrological data used in the MILDOS-AREA calculations are also summarized in the Addendum. Data from an onsite meteorological station for the period October, 2010 - July, 2011 were used for the calculations discussed here. The population distribution used in the MILDOS-AREA calculations to estimate population doses is also presented in the addendum.

7.3.2.3 Total Effective Dose Equivalent (TEDE) to Individual Receptors

Detailed results of the MILDOS-AREA calculations are presented in Addendum 7-A. Maximum dose to a hypothetical individual living at the facility boundary is 4.3mrem/yr. No dose to actual residents surrounding the permit area exceeds 1 mrem/yr. Therefore, all calculated doses fall well within the 10 CFR 20.1301 applicable limit of 100 mrem/yr.

Using reasonable assumptions for occupancy, doses to potential members of the public are also calculated for a courier or delivery person, a member of a group touring the facility, a worker at the CBM compressor station, and a driver on nearby State highway 387. All of these doses are estimated to be well below 1 mrem/yr.

7.3.2.4 Population Dose

The annual population dose commitment to the population in the region within 50 miles (80 km) of the facility is also estimated via the MILDOS-AREA computer code. The results are presented in Table 10 and 12 in the MILDOS report. The collective effective dose is calculated to be 0.1 person-rem, totaled over this entire population. The release of ^{222}Rn from facility operations also results in a dose to the population on the North American continent. This dose will be vanishingly small compared to the dose associated with naturally-occurring ^{222}Rn decay products throughout the entire country.

7.3.2.5 Exposure to Flora and Fauna

Since the only planned emission from the facility is ^{222}Rn to the atmosphere, the most important pathway for exposure to flora and fauna is inhalation, and deposition of ^{222}Rn decay products in surface water, and on surface soils, and vegetation. MILDOS-AREA estimates a ^{222}Rn decay product surface deposition rate as a function of distance from the source for the ^{222}Rn decay products, and calculates surface concentrations. The MILDOS report presents the surface concentrations of ^{222}Rn decay products predicted by MILDOS-AREA. The calculated values represent very small increases when compared to naturally-occurring concentrations.

There are no current dose standards for protection of biota, including native animals that graze on or travel across the site. It is unlikely that any individual animal will be exposed to facility-related ^{222}Rn emissions of any significance for a significant portion of the year.

U.S. Department of Energy Order 5400.5 proposed a limit of one rad per day (rad/d) for aquatic organisms (U.S. Department of Energy 2010). According to 10 CFR 834 (proposed), Subpart F, the proposed limits for terrestrial plants are one rad/d and 0.1 rad/d (100 mrad/d) for terrestrial animals. Those proposed values are far higher than the doses calculated to any human receptor (2.5 mrem/y). Accordingly, there will be no significant impact to biota associated with the Proposed Project.

7.3.3 Potential Occupational Radiological Impacts

The potential occupational doses for the Proposed Project facility can be best estimated by comparison with doses actually reported for similar, operating facilities. The operating Smith Ranch Facility in Converse County, Wyoming is very similar to the planned design of the Proposed Project facility. Both plants employ the following elements to control worker exposure to ionizing radiation:

- The use of downflow pressurized ion exchange columns to limit the release of ^{222}Rn gas from the lixiviant;
- The use of vacuum dryers to minimize the potential release of dried yellowcake during packaging operation; and
- The use of building ventilation systems to minimize airborne concentrations of radioactive materials during operations.

Occupational dose data have been published for Smith Ranch in a site inspection report (NRC, 2009) and several ALARA audit reports (Rio Algom Mining Corporation, 2000, 2001, 2002). This published information was used to compile estimates of average maximum doses to workers at Smith Ranch for both external and predominant internal sources in Table 7-2.

The resulting average values indicated in this table provide a reasonable estimate of expected doses to the maximally exposed worker at the Proposed Project facility. It is also reasonable to assume that average worker doses will be considerably less than these maximums as only a limited number of employees will be working consistently near primary source areas such as the ion exchange columns, dryer area, or header house locations. Furthermore, the Proposed Project facility has been designed to take into account the ALARA principle, with appropriate ventilation air exchange rates, a vacuum dryer system, and pressurized downflow ion exchange column design expected to significantly reduce ^{222}Rn concentrations in the plant.
Use of pressurized downflow ion exchange columns, and operating wellfields under pressure, will result in the majority of ^{222}Rn in the production fluids remaining in solution

and not being released to the environment. It is estimated that only 10 percent of ^{222}Rn in production fluids pressurized downflow ion exchange columns will be released to the atmosphere. Vessel vents from the individual ion exchange vessels will be directed to a manifold that is exhausted outside the building. This venting will minimize employee exposures. Small amounts of ^{222}Rn may be released via solution spills, filter changes, ion exchange resin transfer, RO system operation during groundwater restoration, and maintenance activities. These will be small ^{222}Rn gas releases, on an infrequent basis. The general exhaust system in the plant will have appropriate ventilation to further reduce employee exposure. Air in the central plant and other structures will be sampled for ^{222}Rn progeny to assure that concentration levels of ^{222}Rn and progeny are maintained at ALARA levels.

While no quantitative estimate can be made with regard to expected dose reduction associated with these ALARA-based design features, the annual Proposed Project facility doses are not expected to exceed the doses reported for the Smith Ranch facility.

Further discussions regarding Public and Occupational Health can be found in Sections 7.1 and 7.2 in this TR and Sections 3.11 and 4.12 of the ER.

Table7-2: Estimated Average Maximum Doses for Smith Ranch Dominant Sources

Year	External (mrem/yr)	Internal from U Inhalation* (mrem/yr)	Internal from ^{222}Rn** (mrem/yr)	Max Internal (inhalation only) (mrem/yr)	External + Internal (mrem/yr)	Reported Max TEDE (mrem/yr)
1999	205	57	63	120	325	301
2000	244	21	42	63	307	583
2001	878	58	21	79	957	1080
2008	431	-	-	-	-	538
Average	**440**	**45**	**42**	**87**	**530**	**626**

Notes: * Mean annual maximum based on reported DAC-Hours and 2.5 mrem/DAC-hr

** Mean annual maximum based on reported WLM, and equilibrium ratio of 0.5, and 500 mrem/WLM (ICRP 65)

Figure7-1: Exposure Pathways

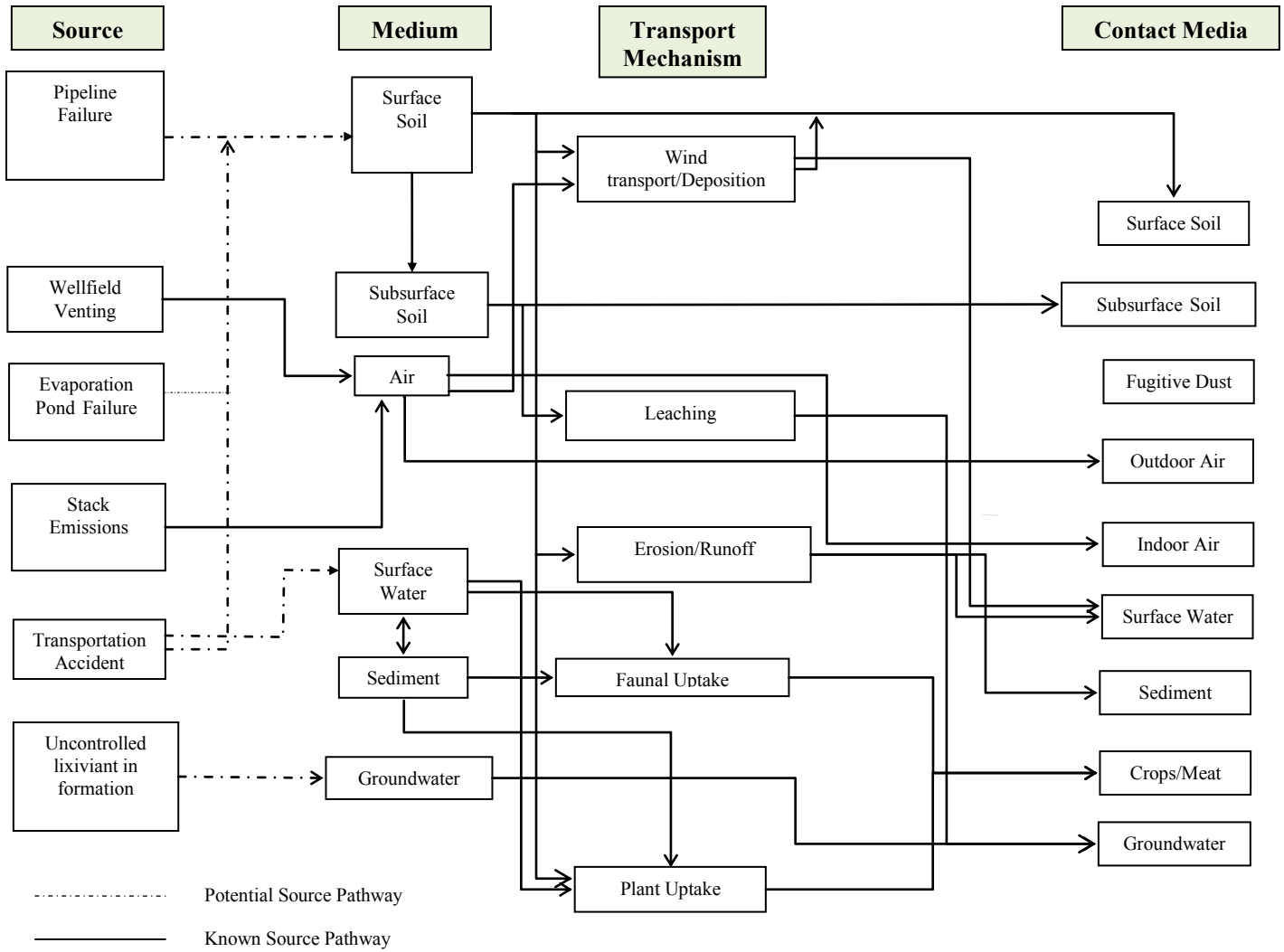

Pathway	Ingestion	Inhalation	Direct Exposure	Absorption
Surface Soil	x		x	
Subsurface Soil	x		x	
Fugitive Dust	x	x	x	x
Outdoor Air		x	x	
Indoor Air		x	x	
Surface Water	x			x
Sediment				
Crops/Meat	x			
Groundwater	x			

x	Predominant Path

7.4 Non-Radiological Effects

During the life of the project, the greatest potential for non-radiological impacts can primarily be attributed to fugitive dust, combustion emissions, and gaseous emissions

7.4.1 Potential Exposure from Air Pathways

Potential air quality impacts will occur during all phases of the Proposed Project. The parameters of concern are fugitive dust and engine exhaust emissions.

7.4.1.1 Fugitive Dust

Fugitive dust will increase over baseline levels during the life of the project due to increased traffic over the local road system. Some sources of fugitive dust generated will include the construction of Proposed Project facilities such as the CPP, Production Units and associated infrastructure. Trucks transporting supplies, chemicals yellow cake, and waste materials to and from the site; work over, and operation activities; and employee and contract worker vehicles traveling to and from the Proposed Project area. All access roads used by vehicles traveling to and from the project area will be maintained to ensure that fugitive emissions are minimal. Mitigation measures are discussed in Section 6.6 of the ER and include dust control measures such as use of dust suppression water or chemicals, speed limit control, and proper selection of road surface materials.

7.4.1.2 Combustion Engine Emissions

During construction, diesel emissions will be emitted from drill rigs, scrapers, water trucks and other heavy equipment. During operation and restoration, diesel emissions from onsite operations and maintenance traffic will be less than emissions during construction. Vehicle combustion emissions will increase again during the restoration and decommissioning phases due primarily to surface reclamation activities. The predominant source of combustion emissions will be industrial equipment tailpipes. Passenger vehicles and delivery trucks will travel less than 0.5 miles from the public highway to the proposed CPP facility.

7.4.2 Potential Exposures for Water Pathways

During the construction of the Production Units infrastructure there is potential for TENORM such as drilling fluids. Based on information gathered during installation of the regional baseline monitor wells for the Proposed Project, a typical injection, recovery, or monitor well is expected to use between 3,000 and 30,000 gallons of water during

drilling and well development and average around 6,000 gallons. TENORM drilling fluids will be stored and disposed of on-site in mud pits, which will be constructed adjacent to the drilling pads. The discharges are authorized under temporary WYPDES permits issued by the WDEQ/WQD. In accordance with the permits, the discharge will be monitored for flow, pH, ^{226}Ra, uranium, TDS, and TSS and reported to the WDEQ/WQD. The quantity of drilling fluids will be minimized by using the minimum quantity of water that is technically practicable for well drilling and development.

7.5 Effects of Accidents

Accidents involving human safety associated with the ISR technology typically have far less severe consequences than accidents associated with underground and open pit recovery methods. ISR provides a higher level of safety for employees and neighboring communities when compared to conventional mineral recovery methods or other energy related industries. Accidents that may occur generally will be considered minor when compared to other industries. Radiological accidents that might occur typically will manifest themselves slowly and therefore are easily detected and mitigated. The remote location of the Proposed Project facility and the low level of radioactivity associated with the ISR process combine to decrease the potential hazard of an accident to the general public.

For the purposes of estimating the potential occupational injury and illness rates for the Proposed Project, AUC estimates that the total site work hours for AUC employees and contractors will be 142,000 hours per year. Using the 2010 Wyoming mineral recovery industry total nonfatal occupational injury and illness rate of 1.8 from Table 3.11-3 of the ER, operations at the Proposed Project potentially could result in 1.3 nonfatal occupational injuries and illnesses per year of operation. Furthermore, employees at ISR operations will not be exposed to the many hazards associated with conventional recovery such as high walls and extensive heavy equipment operation.

7.5.1 Liquid Waste and Process Fluid Accidents

7.5.1.1 Vessel or Tank Failure

A spill of the materials contained in the process tanks at the Proposed Project area will present a minimal radiological risk. Process fluids will be contained in vessels and piping circuits within the CPP. The tanks at the Proposed Project site will contain injection and production solutions, ion exchange resin and liquid 11e.(2) byproducts.

NUREG/1910 analyzes the potential impacts of a failure of a yellowcake thickener resulting in a release of 20 percent of the contents outside the plant structure. This postulated accident scenario is based on an event at the Irigaray ISR facility in 1994. The

event in question was caused by the failure of an inadequate concrete pad supporting the thickener. The subsequent release from the building was a result of the proximity of the thickener to the plant wall. NUREG/CR-6733 concludes that, based on conservative calculations of this unlikely event, the dose to the public will be below the limits in 10 CFR 20. The calculations result in a dose to an unprotected worker in excess of the exposure limits from 10 CFR 20 (i.e., five rem). However, this dose estimate is based on a number of unlikely, conservative assumptions. The scenario makes the unrealistic assumption that no efforts will be made to clean up the spill, allowing the yellowcake to dry and become transportable. The dose is based on lung clearance class Y uranium ("insoluble," therefore stays in lung a long time), which produces the highest dose estimates. This is very conservative since modern yellowcake products are quite soluble and leave the lung much more quickly than the "Y" assumed, resulting in much smaller doses. No allowance in the dose calculation is made for the use of protective equipment, including protection factors from the use of respiratory protection equipment. In the event of an accident similar to this at the proposed facility, personnel will follow spill response procedures which will require the use of PPE.

NUREG/CR-6733 also assesses the potential dose from a catastrophic spill from an ion exchange column resulting in the release of the entire contents of the vessel and the resultant release of ^{222}Rn. Based on a number of assumptions, the predicted dose is 1.3 rem in a 30 minute period to a worker in the area. Any change to the ^{222}Rn concentration or exposure time has a linear effect on dose. For example, if the room size is doubled or the exposure time is halved, then the dose will be halved. NUREG/CR-6733 recommends that the use of ventilation or atmosphere-supplying respirators designed to protect against gases will be sufficient to mitigate doses that unprotected personnel should evacuate spill areas near ion-exchange columns, and that ISR facilities maintain proper equipment, training, and procedures to respond to large lixiviant spills or ion exchange column failure.

Construction of tanks and vessels will be in accordance with ASME and ASTM codes which are approved by NRC. This construction will provide sufficient liquid containment for potential releases. In addition, standard operating procedures for CPP operations will be used by AUC to minimize the potential of releases escaping the CPP primary containment systems. All tanks will be constructed of fiberglass or steel with the exception of the hydrogen peroxide storage tank, which will typically be constructed of aluminum.

Instantaneous failure of a tank is unlikely. Tank failure more likely will occur as a small leak in the tank. In this case, the tank will be emptied to at least a level below the leaking area and repairs or replacement made as necessary. Other prevention methods include shift inspections of plant areas including tanks. If a tank or process vessel has a major failure, such as a rupture, fluids will be captured in secondary containment structures (concrete berms) in the process building. As discussed in Section 7.6, the containment areas will have a sump to pump the collected fluids to other process tanks, a lined backup

storage pond, or a deep disposal well. Following fluid removal the area will be washed down and the water will be collected and disposed using a similar method.

The plant will be designed to control and confine liquid spills from tanks should they occur. The CPP building structure and concrete curb will contain the liquid spills from the leakage or rupture of a process vessel and will direct any spilled solution to a floor sump. The floor sump system will direct any spilled solutions back into the plant process circuit or to the liquid byproduct material disposal system. Bermed areas, tank containments, and/or double-walled tanks will perform a similar function for any process chemical vessels located outside the CPP building.

7.5.1.2 Chemical Spills and Accidents

NUREG/CR-6733 noted that the scope of the NRC mission includes hazardous chemicals to the extent that mishaps with these chemicals could affect releases of radioactive materials. Industrial safety aspects associated with the use of hazardous chemicals at the Proposed Project site are regulated by the Wyoming Safety-OSHA. ISR facilities utilize chemicals during the extraction process and during restoration of groundwater quality. AUC will implement standard industrial safety, accident prevention, personnel training, and detailed oversight, including the development of SOPs for each area of operation, which will be available to NRC for inspection, following the receipt of license and prior to the commencement of operation of the Proposed Project. Additional detail concerning individual chemicals is provided below.

Most of the bulk hazardous chemicals and materials will be stored in specially designed tanks or containers located within secondary containment structures as appropriate outside of the CPP building. The exception is sodium hydroxide which will be stored in the CPP. The conceptual CPP layout which includes chemical storage areas can be found in TR Figure 3-8. Included are berms surrounding outside chemical tanks built to contain 110 percent of the tank contents plus a 25-year flood event occurring within 24 hours as required by 40 CFR 112. A tank sizing summary is provided in Table 3-2 of the TR. Industrial safety aspects associated with the use of chemicals will be regulated by Wyoming Safety-OSHA and the WDEQ will regulate environmental aspects.

Process-related chemicals stored on site will include some or all of the following: hydrogen peroxide, a strong mineral acid, sodium hydroxide, oxygen, carbon dioxide, sodium carbonate, sodium chloride, and sodium sulfide. AUC will have strict standards and operating procedures regarding receiving, storing, handling, inspecting and disposal of chemicals to ensure safety of employees and the public.

The storage, use, and handling of all chemicals will also be consistent with the terms described in NUREG-1910.

Hydrogen Peroxide

Hydrogen peroxide is a strong oxidizer and is a reactive, easily decomposable compound. Its hazardous decomposition products include oxygen and hydrogen gas, heat, and steam. Decomposition can be caused by mechanical shock, incompatible materials including alkalis, light, ignition sources, excess heat, combustible materials, strong oxidants, rust, dust, and materials with a pH above 4.0. When sealed in strong containers, the decomposition of hydrogen peroxide can cause excessive pressure to build up which may then cause the container to burst explosively. A 50 percent solution of hydrogen peroxide will be stored in a horizontal aluminum pressure vessel tank with a pressure actuated relief valve installed in the vent pipe for safety. The storage tank will be located outdoors and outside the CPP, thus venting will be directly to the atmosphere. Upon relief, the vapors dissociate to water and oxygen, therefore no vapor scrubbing system is required. A secondary containment berm will be constructed meeting 40 CFR §264.193 for spill mitigation. Proper valves will be installed at the tank exit and both sides of the redundant pumps. A programmable logic control system integrated to the plant automation system will control the pump starts, flow rates, and time as it relates to volume needed. Standard Operating Procedures (SOP's) will be developed and operators will be trained on using these systems, both automated and manual. Eye wash stations as well as deluge type emergency showers will be located in close proximity to the areas where hydrogen peroxide is used.

As noted in NUREG/CR-6733, a hydrogen peroxide piping system leak in a process building has the potential to result in localized vapor concentrations in excess of the IDLH value of 75 ppm within several minutes. A leak in a confined space has the potential to generate lethal concentrations of vapor at an even faster rate. AUC will incorporate recommendations concerning materials of construction for tanks and piping systems and the use of local ventilation with explosion-proof fans to control vapors in the event of a leak of hydrogen peroxide. The building HVAC system will be designed for three air changes per hour, with the capacity to expand to six air exchanges per hour if needed. In addition, local exhaust fans will be installed along the outer plant wall to sweep vapors and gases near the floor level.

The use of hydrogen peroxide at concentrations greater than 52 percent is subject to the following regulatory programs:

- Process Safety Management of Highly Hazardous Chemicals standard contained in 29 CFR §1910.119 for TQs in excess of 7,500 pounds; and
- Threshold Planning Quantities (TPQs) contained in 40 CFR Part 355, Emergency Response Plans for threshold quantities (TQs) in excess of 1,000 pounds.

As discussed in TR Section 3, the Proposed Project design includes the use of hydrogen peroxide at a concentration of 50 percent contained in a hydrogen peroxide tank with a

capacity of 10,000 gallons. With the design hydrogen peroxide concentration and capacity, AUC will not be subject to the aforementioned regulatory programs.

Strong Mineral Acid

A strong mineral acid (hydrochloric, sulfuric, nitric, etc.) may be used to split the uranyl carbonate complex from pregnant eluant into carbon dioxide gas and uranyl ions in preparation for precipitation using hydrogen peroxide. A 35 percent acid solution will be stored outdoors and outside the processing plant in a cross-linked high-density polyethylene flat bottom tank. The tank will be founded in a secondary containment system that is sized to hold 110 percent of the tank's volume plus a 25-year precipitation episode for 24 hours. The surface of the containment area will be treated with an appropriate coating that could include but not be limited to an acid proof epoxy coating, as appropriate. No other chemicals will be stored in the acid secondary containment area. A vent pipe will be fitted to the storage tank and will route vapors to a water bath or circulating water system. Here, acid vapors quickly react with the water to form a dilute acid solution. The solution will then be treated with an appropriate base such as soda ash to neutralize the dilute acid solution. Alternately, the vent pipe will be fitted with a demister system to mitigate any acid vapors from releasing to the atmosphere.

CPVC (chlorinated PVC) schedule 80 piping with Latharge Viton or EDPM gaskets will be used to transport the hydrochloric acid from the storage tank to the elution tanks or other points of application. Proper valving will be installed at the tank exit, both sides of the redundant pumps, and a re-routing piping arrangement downstream from the pumps will be installed to purge the exit lines to the pregnant eluant tanks and return any residual acid in the lines to the outdoor storage tank. A programmable logic control system integrated to the plant automation system will control the pump starts, flow rates, and time as it relates to volume needed. SOPs will be developed and operators will be trained on using these systems, both automated and manual.

The use of a strong mineral acid is subject to Reporting Quantities (RQs) contained in 40 CFR Part 302.4 for quantities in excess of 5,000 pounds. Based on the design capacity, AUC will be subject to the Reporting Quantities.

At a minimum, an acid-rated respirator, face shield, overall or apron and gloves will be required during the cleanup of any acid spill. Additionally, eye wash stations as well as deluge type emergency showers will be located in close proximity to any areas where such acid will be used.

Sodium Hydroxide

Sodium hydroxide is used for pH adjustment during the precipitation process. The sodium hydroxide will be stored in a flat bottom tank located in the processing plant for use in the precipitation circuit. The 50 percent sodium hydroxide solution will be stored

in a fiberglass tank with a vent pipe routed through the roof to the atmosphere outside and above the CPP. A secondary containment berm will be constructed within the plant to contain spills to the immediate area. As noted in NUREG-1910 (GEIS Section 2.7.2), all ISR facilities have concrete curbed floors with drains and sumps to control and retain liquid from spills and wash-downs. The berm will be constructed to a height of six inches. The sodium hydroxide will be transported using conventional PVC piping from the fiberglass storage vessel into the CPP precipitation tanks. Sodium hydroxide reacts vigorously with hydrochloric acid, which will also be present in the precipitation circuit.

Oxygen

Oxygen presents a substantial fire and explosion hazard. The design and installation of the oxygen storage facility is typically performed by the oxygen supplier and meets applicable industry standards. The oxygen will be delivered to the Proposed Project site by truck and stored on site under pressure in a cryogenic tank in liquid form. The oxygen will be allowed to evaporate and will be added to the barren lixiviant within the Production Units.

The oxygen storage system will consist of 30-ton bulk liquid oxygen pressure vessel(s) which will be centrally located to service multiple production units. The tanks will be supplied and maintained by the liquid oxygen supplier. All oxygen deliveries and tank fillings are performed by the tank supplier. Gaseous oxygen, formed by the air heated evaporators, is then routed via low carbon steel piping that has been properly degreased from the bulk storage tank to individual header houses. Oxygen will be added to the injection stream either upstream of the injection manifolds or at each individual injection well meter run within the header house. The oxygen saturated lixiviant is sent to the individual injection wells at specified flow rates. Oxygen saturation pressure is a function of the water head or pressure above the uranium bearing sands. Totally enclosed fan cooled (TEFC) motors, solenoids, valves, pressure gauges, exhaust ventilation systems and alarm safety devices are included in the design for accident mitigation.

Combustibles such as oil and grease will burn in oxygen if ignited. AUC will ensure that all oxygen service components are cleaned to remove all oil, grease, and other combustible material before putting them into service. Acceptable cleaning methods are described in CGA G-4.1.

Carbon Dioxide

The primary hazard associated with the use of carbon dioxide is concentration in confined spaces, presenting an asphyxiation hazard. Bulk carbon dioxide facilities typically are located outdoors and are subject to industry design standards. Floor level ventilation and carbon dioxide monitoring at low points will be performed to protect workers from undetected leaks of carbon dioxide within the CPP.

The carbon dioxide storage system will consist of one 50-ton bulk liquid carbon dioxide pressure vessel tank supplied and maintained by the carbon dioxide supplier. The tank will be located outdoors and outside the CPP. All carbon dioxide deliveries and tank fillings will be performed by the supplier. Gaseous carbon dioxide is routed via carbon steel piping from the bulk storage tank to both the production and injection main lines.

AUC will incorporate recommendations concerning materials of construction for tanks and piping systems and the use of ventilation to control vapors in the event of a leak of carbon dioxide. The building HVAC system is designed for three air changes per hour with the capacity to expand to six air exchanges per hour if needed. The CPP will have full time alpha radiation and oxygen level monitoring which will be part of an automated system that will initiate the air exchange system as needed. In addition, local exhaust fans will be installed along the outer plant wall to sweep vapors and gases near the floor level.

Sodium Carbonate and Sodium Chloride

Sodium carbonate and sodium chloride are primarily inhalation hazards. Soda ash and carbon dioxide will be used to prepare sodium carbonate for injection in the production unit. Sodium carbonate and sodium chloride are also used for regeneration of ion exchange resin. Dry storage and handling systems will be designed to industry standards to control the discharge of dry material.

A 26 percent sodium chloride saturated solution will be created from pure salt solids transferred using aluminum piping into a 30° cone-bottom reinforced silo with a capacity of 10.361 gallons with a vent pipe vented through the roof to the atmosphere outside and above the main plant. Water is pumped into the storage tank using PVC piping and the salt dissolves until solution saturation is achieved.

A 32 percent soda ash saturated solution will be created from dense soda ash solids transferred into a flat bottom reinforced fiberglass tank with a capacity of 13,114 gallons with a vent pipe vented through the roof to the atmosphere outside and above the main plant. Hot water is pumped using copper or PVC pipe into the storage tank and the soda ash dissolves until solution saturation is achieved. Solution temperature is maintained at a minimum of 95°F to avoid solids precipitation of the soda ash solution.

Proper valves will be installed at the tank exits and both sides of the redundant pumps. A programmable logic control system integrated to the plant automation system will control the pump starts, flow rates, and time as it relates to volume needed. Standard Operating Procedures will be developed and operators will be trained on using these systems, both automated and manual.

Sodium Sulfide

Sodium sulfide may be used as a reductant during groundwater restoration. Sodium sulfide is corrosive and will cause severe eye and skin burns. Routes of entry into the body include inhalation, ingestion, and contact with the skin. Under low pH conditions, sodium sulfide can react with water to liberate hydrogen sulfide gas.

Proper valves will be installed at the tank exits and both sides of the pump. A programmable logic control system integrated to the plant automation system will control the pump starts, flow rates, and time as it relates to volume needed. Standard Operating Procedures will be developed and operators will be trained on using these systems, both automated and manual.

Facility Areas Where Fumes or Gases May Be Generated

Potential sources of non-radiological fumes or gases can result from use of process related chemicals. The potential sources of non-radiological fumes or gases are minimal in the ion exchange process area since the production solutions contained in the process equipment are maintained under a positive pressure.

Non-Process Related Chemicals

Non-process related chemicals that will be stored and used on-site will include diesel and propane. Due to the combustible and flammable nature of these chemicals, they will be stored outside of the plant building and away from hazardous material storage areas. Storage containers will be located above ground and with safety and environmental provisions according to federal, state and local regulations.

Domestic Sewage

Relatively small amounts of domestic effluent from an on-site septic system will be discharged to the environment. As described in Section 4.13, the septic system will discharge up to a maximum of 2,000 gpd of septic tank effluent to the subsurface in a drainfield based on the peak design flow rate during construction. Alternately, AUC may decide to design and permit a septic treatment system with surface discharge of treated effluent. The septic water disposal facility will be designed and constructed in accordance with WDEQ-WQD standards designed to protect public health and the environment. The drainfield, if used, will include monitor wells to ensure that the septic tank and drainfield adequately treat the domestic septic water if the peak flow to the septic tank warrants a monitor well system.

7.5.1.3 Production Unit Spill/Pipeline Failure

The rupture of an injection or recovery feeder line or individual flow line in a Production Unit module, or a trunkline between a Production Unit header house and the proposed CPP, will result in a release of injection or recovery solution which will contaminate the ground in the area of the break. Though unlikely, if such a rupture occurs, AUC will comply with all notification requirements put forth in 10 CFR Part 20.2202 and Part 20.2203.

Occasionally, small leaks at pipe joints and fittings may occur. Small leaks in Production Unit piping typically occur in the injection system due to the higher system pressures. Until remedied, these leaks may drip injection or recovery solutions onto the underlying soil. AUC will monitor trunklines, feeder lines, and individual flow lines for changes in pressure or flow. Significant variation in these parameters will signal alarms at the CPP control room, which will prompt an investigation of the potential leak. These leaks seldom result in significant soil contamination. Following repair of a leak, AUC will require that the affected soil be surveyed for contamination and the area of the spill documented. If contamination is detected, the soil is sampled and analyzed for the appropriate radionuclides. All soils and clean-up materials will be disposed off-site at an appropriately licensed 11e.(2) byproduct material disposal facility.

7.5.1.4 Lixiviant Excursion

Excursions of lixiviant at ISR facilities have the potential to impact adjacent, non-exempt aquifers with constituents that have been mobilized by the ISR process. These excursions may be classified as horizontal or vertical. A horizontal excursion is a lateral movement of processing solutions outside the subsurface recovery zone of the ore-body aquifer to a monitor well. A vertical excursion is a movement of solutions into an overlying aquifer monitor well (there being no underlying aquifer at the Proposed Project).

Potential impacts to groundwater from the proposed lixiviant result from:

- Addition of sodium bicarbonate and or carbon dioxide and oxidant to the groundwater;
- Addition of chloride to the groundwater by the proposed CPP; and
- Interaction of these chemicals with the mineral and chemical constituents of the Production Zone Aquifer (PZA) being milled. The result is that during the ISR operations, the concentration of some of the naturally occurring dissolved constituents in the PZA will be higher than prior to ISR operations.

According to NUREG-1910 (GEIS, Supplement 3, Section 4.5.2.1.2.2), excursions have occurred at ISR operating facilities. Following analysis of 60 events by NRC staff, most excursions were controlled through pumping and extraction of nearby wells. *In all cases,*

however, none of these excursions resulted in environmental impacts to adjacent aquifers (NRC Report to Commission, 2009).

Potential groundwater quality impacts in adjacent non-exempt aquifers from ISR activities are related to the identification, control, and clean-up of excursions. During production, injection of the lixiviant into the Production Unit results in a temporary degradation of water quality compared to pre-operational conditions. Movement of water out of the recovery area to a monitor well, as demonstrated by an exceedance of UCL constituents is an excursion. Past experience from other commercial scale ISR projects in the PRB has shown that with proper steps in monitoring and operating a Production Unit, excursions, if they do occur, can be controlled and recovered through adjustment of the water balance and bleed, such that impacts to groundwater quality are prevented.
No stock or drinking water wells will be located in the currently proposed ISR operation areas and will not be completed in the ore bearing aquifer where production will occur. If future development includes an area(s) where a stock well is located in an ISR production aquifer, AUC commits to the following measures:

- Replacing the wells with new wells completed in either shallower or deeper sands that are not impacted by ISR operations; or
- Providing another source of stock water.

With proper Production Unit balance, ISR operational fluids can be controlled and confined to the PZA until restoration efforts are employed to cease and reverse the oxidation process. As a result, no impacts are anticipated in PZA or OA water quality.

7.5.1.5 Lined Backup Pond Accidents

Liquid waste spills or leaks could occur if the backup pond were to overtop or if the liner failed. The potential for pollution from the lined ponds will be minimized through careful construction and inspection of the pond liners during construction, routine inspection and testing of the leak detection equipment, and control of pond water levels. The storage pond design will utilize a double liner system with an intervening leak detection system. Backup pond liners and the leak detection system will meet the requirements of NRC Regulatory Guide 3.11.

The leak detection system will consist of a permeable drainage layer and a collection piping system, sandwiched between the upper and lower layers. The permeable drainage layer will be located directly under the primary liner. This layer will provide support for the overlying liner, and will also transmit any leakage to collection pipes. Beneath the backup pond leak detection system will be a secondary geosynthetic liner. The secondary liner will function to contain potential leaks in the primary liner, and will be installed on top of the underlying foundation material. Standpipes will be installed to allow water level measurements to be taken of the permeable leak detection drainage layer. A detailed

description of the leak detection system design will be included in the backup storage pond design plan which AUC will provide to NRC.

During the site specific geotechnical evaluation for the backup storage pond, AUC determined that a shallow perched water table is not currently present beneath the proposed pond location. Fifteen geotechnical borings were drilled to a depth of approximately twenty (20) feet, with four borings drilled within the proposed pond locations. Groundwater was not observed in any of the test borings during drilling operations. As part of the pond leak detection system AUC will install shallow leak detection wells to provide for redundant detection of potential leaks. The depth to the surficial groundwater bearing unit within the Proposed Project boundary is greater than 20 feet. A detailed discussion of this surficial groundwater unit is included in Sections 2.6 and 2.7 of this TR.

Since the leak detection well network will serve as a redundant backup to the storage pond leak detection system, AUC will measure the water levels in the storage pond leak detection wells quarterly.

If there is a water level increase in a pond leak detection well or water is present in a previously dry well, which suggests that a leak might have occurred, AUC will attempt to collect a water sample from the affected leak detection well. AUC will determine through statistical analysis of the water quality whether the groundwater collected from the leak detection well is from a leak from the storage pond or from surface waters.

7.5.1.6 Yellowcake Dryer Accident

NUREG/CR-6733 analyzed the potential effects of accidents involving yellowcake dryers by examining the scenarios analyzed in NUREG-0706:

1) Fire and explosion in the yellowcake drying area;
2) Discharge valve at bottom of dryer fails open, overfilling a drum and spilling dryer contents;
3) Failure of off-gas treatment system on one dryer; and
4) Tornado strikes to the dryer room

The impact analysis for the four scenarios in NUREG-0706 were based on two yellowcake dryers, each having a capacity of 4,300 1b of yellowcake, and two yellowcake dryer feed hoppers, each with a 155 ft^3 volume. NUREG-0706 also reports an upper-limit failure rate of 5×10^{-3} per plant year. NUREG/CR-6733 notes that this frequency appears to be for a gas-fired multiple hearth dryer based on failure rates for piping used in the transmission of natural gas. NUREG/CR-6733 concludes that the failure rate for the rotary vacuum dryer is likely to be less since it is not a gas-fired unit and uses hot oil as the heating medium for drying the yellowcake. However, the analysis did not quantify the expected failure rate for a hot oil-heated vacuum dryer.

Of the four scenarios, NUREG/CR-6733 noted that the fire and explosion scenario bounded the analysis for discharge valve failure and tornado strike. The remaining scenario, failure of the off-gas treatment system, is specific to gas-fired multiple hearth dryers. For the purposes of the Proposed Project design, use of the fire and explosion scenario will provide a bounding analysis for an accident involving a large quantity of dried radioactive material.

It is anticipated that the Proposed Project will utilize two rotary vacuum dryers with a maximum capacity of approximately 3,700 pounds of yellowcake which is equivalent to approximately 3,000 pounds of U_3O_8. This capacity is based on an optimal dryer loading of ½ of the dryer capacity and 40 percent solids and 60 percent liquid by weight slurry from the filter press. The filter press feeding the dryer has a maximum capacity of 110 ft^3 of wet yellowcake. Assuming a specific gravity of wet yellowcake of 1.55, the weight of the yellowcake contained in the hopper will be 10,520 pounds. Using the 40 percent by weight slurry from the filter press, the weight of yellowcake solids in the hopper will be 3,700 pounds. This results in a total of 10,520 pounds of yellowcake slurry available in the hopper and dryer for dispersion in the event of a fire or explosion.

NUREG/CR-6733 assumed that approximately 50 percent of the maximum yellowcake capacity available in two dryers and two hoppers will not be converted into aerosol size particles by the fire or explosion. Assuming this same factor for the Proposed Project scenario, 1,830 pounds of yellowcake could become airborne. The volume of the Proposed Project dryer room is approximately 8.2×10^4 ft^3.

NUREG/CR-6733 cites studies that indicate that the maximum sustainable airborne yellowcake concentration in air is 100 mg/m^3 (6.2×10^{-6} lb/ft^3), with heavier materials dropping out within a few minutes. Under the NUREG/CR-6733 scenario of 9,500 pounds of yellowcake dispersed in a dryer room with a volume of 1.2×10^5 ft^3, the average airborne yellowcake concentration for the first ten minutes was estimated at 3.8×10^{-2} $lb/ft^{3.}$ This concentration resulted in a potential dose to a worker wearing respiratory protection (protection factor = 1,000) of 8.8 rem for the first ten minutes and 1.4 mrem for the second ten minutes after the heavier material had settled. This dose was based on Y class U_3O_8.

The average concentration of airborne uranium in the dryer room for the first ten minutes under the Proposed Project scenario will be 2.23×10^{-2} lb/ft^3. Although this average concentration will result in a higher dose during the first ten minutes than that postulated under the NUREG/CR-6733 scenario, the uranium produced at the Proposed Project is expected to be D Class materials. This is particularly true of the 3,700 pounds contained in the hopper. Until samples of the actual Proposed Project product can be analyzed for solubility, W Class uranium has been assumed in this application. W Class uranium will result in a dose lower than Y Class by a factor of 25. Although some of the dispersed material could be converted to Y Class depending on the temperature produced by the fire or explosion and the period of time that the material is exposed to that heat, it is clear

that the dose under the Proposed Project scenario will be less than that determined in NUREG/CR-6733.

NUREG/CR-6733 made the following recommendations due to the potentially severe consequences of a yellowcake dryer explosion:

- The checking and logging requirements contained in 10 CFR Part 40, Appendix A, Criterion 8 should be retained;
- Operators should train crews for response to an accident of this type;
- Dryer manufacturer maintenance and operations recommendations should be followed; and
- Respirators should be used in the area of the dryer when it is operating.

AUC will implement all of these recommendations at the Proposed Project.

7.5.2 Fires and Explosions

The fire and explosion hazard of the CPP will be minimal because the plant does not use flammable liquids in the recovery process and, building and equipment materials are largely made up of non-flammable materials such as steel or concrete. Propane used for building heat will be the primary source for a potential fire or explosion. In the CPP the uranium will be adsorbed on ion exchange resins. An explosion, therefore, will not appreciably disperse the uranium to the environment.

In the Production Units, injection and recovery well piping systems will be regulated utilizing manifolds for ease of operational control. Piping manifolds, submersible pump motor starters/controllers, and gaseous oxygen delivery systems are situated within electrically heated header houses. An accumulation of gaseous oxygen will be the primary source for a potential fire or explosion. Such an event could result in the rupture of a leaching solution pipeline within the building and a spill of leaching solution.

Prevention methods utilized to minimize potential impacts to human health and the environment from fire or explosion scenarios discussed above include the following:

- Spilled liquids or slurries will be confined to the building sump or to the runoff control system;
- The sealed drums and vacuum dryer at the Proposed Project CPP will contain the dried yellowcake powder, and any potential releases will be contained within the dryer room;
- Oxygen storage will be located a safe distance from the CPP or header house;

- Both the gaseous oxygen and primary leaching solution lines entering each header house are equipped with automatic low pressure shut off valves to minimize the delivery of oxygen to a fire or of liquids to a spill;
- Additionally, each header house is equipped with a continuously operating exhaust fan that will assist in preventing the build-up of oxygen in the building; and
- Procedures will be in place for confined space work or hot work for monitoring of oxygen build-up prior to start of work.

Automatic detection and alarm systems along with sprinkler systems will be installed in the facilities at the Proposed Project. Fire extinguishers will be placed at accessible locations in all buildings and vehicles for quick response and training will be provided for appropriate personnel in use of fire extinguishers. AUC personnel will receive training for responding to emergency fire or explosion scenarios. The emergency response plan will include descriptions of the following provisions:

- Notification and evacuation procedures;
- Personal protective equipment;
- General firefighting safety rules;
- Reporting procedures; and
- Electrical and gas emergencies.

7.5.3 Transportation Accident Risk

All shipments will be transported by appropriately licensed transporters and subject to both federal (NRC 10 CFR Part 71; DOT 49 CFR Part 173) and state transportation regulations. The following sections identify the materials that will be shipped during operations. Potentially, up to 75 vehicles will be traveling to and from the site on a daily basis, approximately 15 of which will be for the delivery of packages and office supplies, process related fuels and chemicals, and yellowcake.
Transportation of regulated materials to and from the Proposed Project can be classified as follows:

- Shipments of dried yellowcake. Yellowcake will be transported in 55 gallon drums to a conversion facility for refining and conversion located in Metropolis, Illinois;
- Shipments of process chemicals or fuel from suppliers to the site;
- Shipments of non-11e.(2) byproduct material;
- Shipment of 11e.(2) byproduct material from the site to a licensed disposal facility. A detailed list of potential disposal sites can be found in ER Section 3.2.2; and

- Potential acceptance of shipments of uranium loaded resins from future satellite or non-AUC facilities.

7.5.3.1 Yellowcake Shipment

As stated in NUREG-1910 (GEIS Section 3.3.2), yellowcake shipments will be made in accordance with U.S. DOT and USNRC regulations including 10 CFR 71.5 (Transportation of Licensed Materials) and will be handled as LSA material. Currently the only permitted conversion facility in the United States is in Metropolis, Illinois. Transportation of dried yellowcake will be made in exclusive-use transport vehicles to facility for further processing. AUC anticipates that approximately one yellowcake shipment per week will occur.

AUC will contract with an appropriately licensed transport company that specializes in shipment of yellowcake. The transport company will have extensive emergency response programs including spill response equipment on board. Drivers will be trained in emergency response procedures, and there will be constant monitoring of truck location and operating parameters. The transport companies will also have standing contracts with environmental emergency response contractors for spill cleanup. Yellowcake shipments will be handled as low-specific-activity (LSA) material. The anticipated route from the Proposed Project area to the conversion facility is described and illustrated in ER Table 4-2 and Figure 4-1. Shipment distances for alternate routes are not expected to differ significantly from those estimated for the primary routes (NUREG- 1910, p. 3.2-7).

NUREG-0706 assumes that the probability of a truck accident involving shipments of yellowcake in any year is 11 percent for each uranium production facility. This calculation used average accident probabilities (4.0×10^{-7}/km for rural interstate, 1.4×10^{-6}/km for rural two-lane road, and 1.4×10^{-6}/km for urban interstate) which NUREG 1910 and supplements determines is conservative.

AUC will develop an emergency response plan for yellowcake and other transportation accidents to or from the Proposed Project. The emergency response plan will include descriptions of the following provisions:

- DOT Regulations including applicable sections of 10 CFR 71.5;
- Carrier Emergency Response Procedures;
- Spill Kits;
- Immediate Response and notification, in coordination with local and State agencies and in accordance with ;
- Accident Scene Response;
- Spill cleanup;
- Review of Accident Documentation;

- Review of Monitoring and Sampling Data;
- Site Abandonment; and
- Reporting/Lessons Learned.

The worst case accident scenario involving yellowcake transportation would be an accident involving the transport truck in which the integrity of one or more drums containing yellow cake is breached, resulting in a release to the environment. The primary potential environmental impact associated with an accident involving the spill of yellowcake will be the remediation of road surfaces and soils impacted at the spill area and repair of related damage to the topsoil and vegetation structure. To minimize the impacts from such an accident, AUC, after licensing, will develop and implement detailed SOPs for all yellowcake transport. The SOPs will be available for inspection by NRC. They will include at a minimum the following procedures:

- AUC will have a fully developed communication and emergency response plan produced cooperatively with local, State of Wyoming authorities and agencies for all transport and emergency conditions. The plan will include adequate communication and training of appropriate staff;
- Each truck will be equipped with a communication device that will allow the driver to communicate with either the shipper or receiver to obtain any assistance needed;
- A check-in and check-out procedure will be instituted where the driver will notify the receiving facility prior to departure from his location. If the yellowcake shipment fails to appear within a set time, an emergency response team will respond and search for the vehicle. This system will assure reasonably quick response time in the case that the driver is incapacitated in an accident or medical emergency; and
- Each yellowcake transport vehicle will be equipped with an emergency spill kit which the driver will be trained to use for containment of any spilled material. The kit will include plastic sheeting to cover spilled material until cleanup operations can begin;
- AUC will dispatch either properly trained and equipped AUC employees, or, if the accident is distant, nearby contractor personnel qualified and trained as RSO/RST to supervise spill cleanups and conduct post-accident surveys to ensure that any spill has been properly addressed; and
- Both shipping and receiving facilities will be equipped with emergency response kits to quickly respond to a transportation accident.

7.5.3.2 Process Chemicals and Fuel Shipment

It is estimated that up to four bulk chemical, fuel, and supply deliveries will be made per working day throughout the operational life of the project. Transportation of process

chemicals and fuel will follow all applicable DOT hazardous material shipping regulations and requirements. Truck shipments of process chemicals to the Proposed Project site could result in potential local environmental impacts if trucks are involved in an accident. In the unlikely case of an accident, all spills will be immediately remediated within the affected area. The process chemicals used at an ISR facility in truck load quantities are common to many industries and present no potentially abnormal risk. Types of deliveries potentially will include carbon dioxide, oxygen, soda ash and fuel.

Bulk chemical shipments for the Proposed Project will total approximately 1,217 shipments per year or 3.3 shipments per day. Utilizing WYDOT's 1.5 percent annual traffic increase in ER Table 4-4, these chemical shipments represent a daily increase of less than 0.4 percent for truck traffic for 2015 and even less for 2020.

Transportation accidents involving fuel (diesel, gasoline, and propane) shipment also present potential environmental impacts. During operation it is estimated that approximately 1 shipment of fuel will be transported to the site each day. Fuel will be transported from a nearby town such as Gillette or Wright, which will minimize the trip distance and keep the probability of an accident very low.
Since most of the material could be removed, no significant potential long-term environmental impacts will result from an accident involving the process chemicals.

7.5.3.3 Loaded Resin Shipments

The uranium recovery circuit at the CPP will be designed to process up to two million pounds per year of U_3O_8. The CPP will be capable of processing additional uranium-loaded IX resin from satellite ISR facilities, including those owned and/or operated by AUC and those owned and/or operated by other ISR licensees. Uranium-loaded IX resin would be transported to the Proposed Project in tanker trailers with 500 yd^3 capacity. Based on a typical concentration of 50 g/L U_3O_8 (ISR GEIS Section 4.2.2.2), each truckload of uranium-loaded IX resin will contain approximately 1,500 pounds U_3O_8. Based on the CPP processing rate, a potential of up to four uranium-loaded IX resin shipments would be made to the facility each day. A transportation accident resulting in release of uranium-loaded IX resin would have a lower risk than an accident involving yellowcake described previously.

7.5.3.4 11e.(2) Byproduct Material Shipment

All solid 11e.(2) byproduct material including unusable contaminated equipment, filters, spent resin, etc. generated during operations will be transported off-site to a licensed disposal facility. Because of the low levels of radioactivity involved, these shipments are considered to have minimal potential environmental impact in the event of an accident. Shipments are generally made in bulk in sealed roll-off containers in accordance with the

applicable DOT hazardous materials shipping provisions. Such requirements are provided in 10 CFR 71.5 (Transportation of Licensed Materials).

Current plans by AUC propose shipment of solid 11e.(2) byproduct material to one of three licensed disposal facilities located comparatively near the Proposed Project. AUC will develop an agreement with an off-site disposal facility prior to initiating any activity that will generate solid 11e.(2) byproduct material. Those facilities include:

- Pathfinder Mines Corporation; Shirley Basin (Wyoming) Facility;
- Denison Mines Corporation; White Mesa Uranium Mill, Blanding, Utah; and
- Energy Solutions LLC, Clive Disposal Site, Clive, Utah.

AUC estimates that 100 yd^3 of solid 11e.(2) byproduct material will be shipped each year. Using 20 yd^3 roll-offs approximately five shipments will be made each year. There will be no shipments of liquid 11e.(2) byproduct material, as it will be disposed in one of up to four DDWs on site, as discussed in Section 4.13 of this document. Potential routes for shipment of solid 11e.(2) byproduct material are described and illustrated in Table 4-5 and Figure 4-2 of the ER.

11e.(2) byproduct material shipments will be very infrequent and will not significantly impact the daily traffic compared to other operations at the site.

7.5.3.5 Solid Non-11e.(2) Byproduct Material Shipment

Solid Non-11e.(2) byproduct materials and wastes will be transported to the Campbell County municipal landfill in Gillette approximately 41 miles from the Proposed Project site. The solid waste shipments will result in minimal traffic impacts. Section 4.13 describes the estimated quantities, management systems including volume reduction, transport/disposal methods and potential impacts of solid byproduct material disposal in more detail. AUC estimates that two trips per week will be necessary and will result in minimal traffic impacts. The anticipated solid non-11e.(2) byproduct material shipment route is shown on ER Figure 4-3.

7.5.3.6 Hazardous Waste Shipment

AUC expects that the Proposed Project will be classified as a conditionally exempt small quantity generator (CESQG) by WDEQ/SHWD. In this classification the Proposed Project facility will generate less than 220 lbs of hazardous waste in a calendar year, generate less than 2.2 lbs of acute hazardous waste in a month, and store less than 2,200 lbs of hazardous waste on-site at any one time (WDEQ/SHWD 2011).

AUC will develop a waste management SOP, following receipt of licensing but prior to commencement of construction, to maximize the amount of recycling, minimize the production of hazardous waste, and for the collection, sorting, and temporary storage of

all solid non-11e.(2) waste. Hazardous materials generated from the Proposed Project may include used batteries, expired laboratory reagents, fluorescent light bulbs, solvents, cleaners, and degreasers. These items will be transported to an off-site treatment, storage and disposal or recycling facility which is permitted to manage hazardous waste material by WDEQ/SHWD or a nearby State. AUC estimates that one trip per month will be necessary and will result in minimal traffic impacts. The anticipated shipment route is identical to the solid non-11e.(2) byproduct material shipment route is shown on ER Figure 4-3.

7.5.3.7 Accident Risk Associated with Coal Bed Methane Development

The presence of CBM development on the Proposed Project site presents accident risks that are not commonly associated with ISR operations. CBM development includes potentially increased risks of methane seepage, fires, or explosions. Methane is not biologically toxic, but high concentrations in confined spaces can displace oxygen and present a danger of fire or explosion.

Methane gas can reach the surface by naturally occurring seepage along fault lines, fractures, or sandstone layers in areas where coal beds are shallow. Gas migration could also be enhanced during CBM development in areas along a coal outcrop, which are not present in the project area. Non-CBM wells that penetrate the coal seam may provide pathways for migration of methane if the casings or plugs are inadequate or faulty or lack isolation through the coal horizons. BLM reported in its *Final Environmental Impact Statement and Plan Amendment for the Powder River Basin Oil and Gas Project* (BLM, 2003), that experience in the PRB has shown few cases of methane seeps that involve potentially explosive concentrations of gas have occurred.

Risks from methane associated with oil and gas wells, including CBM wells, are controlled through the BLM-mandated conditions of approval for the Application for Permit to Drill (APD) that address well conditions, casing, ventilation, and plugging procedures appropriate to site-specific CBM development plans. In addition, CBM operators must have emergency plans and employee training programs that address fire prevention and control measures.

Pipeline Ruptures

CBM development involves the potential for leaks or ruptures of gas flow lines or pipelines. Most ruptures occur when heavy equipment accidentally strikes the pipeline while operating in close proximity. These ruptures may result in a fire or explosion if a spark or open flame ignites the escaping gas.

The CBM operators monitor the pipeline flows by either remote sensors or daily inspections of the flow meters. Routine monitoring reduces the probability of effects to

health and safety from ruptures by facilitating the prompt detection of leaks. If pressure losses are detected, the wells are shut in until the problem is isolated and addressed. Accident response will be similar to what is described above in Section 7.5.2 (Fire and Explosions).

Materials used in the pipelines are designed and selected in accordance with applicable standards to minimize the potential for a leak or rupture. Pipeline markers are posted at frequent intervals along the pipelines to warn excavators and to reduce the risk of accidental rupture from excavating equipment. AUC will work with CBM operators located in the Proposed Project area to ensure that all gas collection and transmission lines within proposed development areas are adequately marked to prevent accidental rupture by AUC activities.

The projected development area of the Proposed Project area includes approximately 36.64 miles of gas pipeline. Based on a statistical average of one significant safety incident per year per 4,154 miles of total pipeline, 0.0001 additional pipeline safety incidents (including ruptures) may occur within the Proposed Project area per year over the life of the project.
Based on the low incident rate, location of pipelines, and the preventative measures planned for the Proposed Project site, there is an insignificant increase in risks to human health and safety and control of licensed material associated with potential pipeline ruptures from CBM-related facilities.

7.5.3.8 Natural Disaster Risk

Tornados

NUREG/CR-6733 considered the potential risks to an ISR facility from natural disasters. Specifically, the risk from an earthquake and a tornado strike were analyzed. NRC determined that the primary hazard from these natural events was from dispersal of yellowcake from a tornado strike and failure of chemical storage facilities, resulting in the possible reaction of process chemicals. NUREG/CR-6733 recommended that licensees follow industry best practices during design and construction of chemical facilities. AUC is committed to following these standards.

The Proposed Project is located in Campbell County Wyoming, in which 69 tornado touch downs were recorded in a period from 1950 through 2003. Of those, 65 tornadoes were classified as F0 (with wind speeds of 40-72 miles per hour and described as a gale tornado) or F1 tornadoes (described as moderate with wind speeds of 73-112 miles per hour). Four of the 69 tornadoes were classified as F2 with wind speeds of 113-157 miles per hour and described as significant tornadoes. Based on the Fujita Scale, the type of damage that can be expected from an F2 tornado is roof damage, unsecured mobile homes pushed off foundations, and light structures severely damaged or destroyed. Based

on maximum wind speed probability, the eastern third of the state can expect a tornado between 10,000 and 100,000 years.

NUREG-0706 estimated the probability of occurrence of a tornado in the area in which the project is located is about 3 x 10^{-4} per year. The area was categorized as Region 3 in relative tornado intensity. For this category, the wind speed of the design tornado was 240 mph (F4 tornado), of which 190 mph is rotational and 50 mph is translational. The Proposed Project structures are not designed to withstand a tornado of this intensity.

The nature of the operation is such that little more could be done to secure the facility with advance warning than without it. NUREG-0706 postulated a "no warning" tornado. It was conservatively assumed that a maximum inventory of 50 short tons of yellowcake was onsite when the tornado strikes, and that 15 percent of the contained material was released. In this analysis, NRC assumed that the tornado lifts about 25,100 lb of yellowcake (equivalent to the contents of twenty-six 55-gallon drums). The conservative model assumed that all of the yellowcake was in a respirable form, was entrained as the vortex passed over the site and upon reaching the site boundary, was dispersed by the trailing winds. The model predicted a maximum exposure at a distance of approximately 2.5 miles from the mill, where the 50 year dose commitment to the lungs of an individual was estimated to be 8.3 x 10^{-7} rem (0.8 mrem). NUREG/CR-6733 reviewed this model scenario and found it to be valid for ISR operations.

With most of the dried yellowcake product being stored in 55 gallon drums or in the vacuum dryer, both located in an engineered steel building, the dried yellowcake will not be released in the air by a F0 and F1 tornadoes as roof damage is not typical. However, if a tornado does cause damage to the building housing the vacuum dryer and the stored yellowcake to the point that the building collapses, then a possibility exists that some of the dried yellowcake could be released to the environment from damaged 55 gallon drums or from a damaged vacuum dryer.

NUREG/CR-6733 concluded that potential tornado risk is very low at uranium ISR facilities and that no design or operational changes to mitigate the risk. One recommendation was that chemical storage tanks be located sufficiently far apart that leaks caused by tornado damage will not result in chemical reactions. AUC will institute procedures and provide instructions to operating personnel for response and mitigation of natural disasters and any associated spills of radioactive materials. Emergency response procedures will include:

- Notification to personnel of potential severe weather ;
- Evacuation procedures ;
- Damage inspection and reporting; and
- Cleanup and mitigation of spills of radioactive materials or chemicals.

Earthquakes

There are no capable faults (i.e. active faults) with surface expression mapped within or near the Proposed Project area, according to the USGS Quaternary Fault and Fold Database (USGS 2009). Earthquake probabilities and consequences are discussed in TR Section 2.6.5 , including current earthquake probability maps that are used in the newest building codes (2,500 year maps), which suggest a scenario that will result in moderate damage to buildings and their contents. The probability-based worst-case scenario could result in an Intensity VII earthquake in the area of the Proposed Project. In intensity VII earthquakes, damage is negligible in buildings of good design and construction, slight-to-moderate in well-built ordinary structures, considerable in poorly built or badly designed structures such as unreinforced masonry buildings. The proposed CPP and associated structures will be built to withstand an intensity VII earthquake.

The 2,500-year probabilistic map presented in TR Addendum 2.6C-6 shows that the peak ground acceleration with a 2% probability of exceedance in 50-years is 10 to 12 percent/g, which equates to a Level IV earthquake. Level VI earthquakes are felt by almost everyone around but do not cause significant damage. Since structures at the Proposed Project will be designed according to the 2,500-year probabilistic map, the risk of significant earthquake damage to the proposed facilities is small, as the total anticipated project life is approximately 16 years

According to NUREG/CR-6733 the primary hazard associated with an earthquake at an ISR facility is from the rupture of hazardous chemical tanks and mixing of incompatible fluids. The recommendations for mitigation of this hazard include locating storage tanks which contain incompatible fluids a sufficient distance away from each other. As discussed in Section 7.5.1.1 of this report, storage tanks will include separate containment berms which will reduce the risk of mixing of incompatible chemicals in the event of a spill. In addition, tanks will be strategically located such that there is a low risk of a chemical reaction during an accident that results in the rupture of a tank. SOPs, training, and personal protective equipment will be available to personnel for response and mitigation of hazardous chemical spills.

7.6 Socioeconomic Costs

The socioeconomics effects of site preparation, construction, and operations are discussed in Section 4.10 of the ER, and summarized in Sections 7.1 and 7.2 above. The costs and benefits for these phases are discussed in Section 9 of this report.

7.7 References

Argonne National Laboratory, MILDOS-Area: An Enhanced Version of MILDOS for Large Area Sources. June 1989.

Bureau of Land Management (BLM), Final Environmental Impact Statement and Plan Amendment for the Powder River Basin Oil and Gas Project. Wyoming State Office and Buffalo Field Office. January 2003.

CC Gov (Campbell County Government) Public Works, Campbell County Landfill information. 2011. Website: http://www.ccgov.net/departments-/publicworks/Landfill/index.html

Center for Nuclear Waste Regulatory Analyses. NUREG/CR-6733. *A Baseline Risk Informed, Performance-Based Approach for In Situ Leach Uranium Extraction Licenses.* 2001.

City of Gillette. Information about the City of Gillette's Curbside Recycling Program. 2010. Website: http://www.ci.gillette.wy.us

ICRP (International Commission on Radiological Protection). General Principles of Monitoring for Radiation Protection of Workers, Publication 35, 1979.

ICRP (International Commission on Radiological Protection). Limits for Intakes of Radionuclides by Workers, Publication 30, 1972a.

ICRP (International Commission on Radiological Protection). Radiation Protection, Publication 10. 1968.

ICRP (International Commission on Radiological Protection). Evaluating Risks from Radiation, Publication 8, 1966.

ICRP (International Commission on Radiological Protection). Radiation Protection, Publication 2. 1959.

*Production Unit*EPA (U.S. Environmental Protection Agency). 1974. Information on Levels of Environmental Noise Requisite to Protect Public Health and Welfare with an Adequate Margin of Safety. 550/9-74-004

EPA (U.S. Environmental Protection Agency). 1973. Impact Characterization of Noise Including Implications of Identifying and Achieving Levels of Cumulative Noise Exposure, EPA Report NTID 73.4.

Midwest Research Institute, Conversion factors for PM10 to PM2.5, Background Document for Revisions to Fine Fraction Ratios Used for AP-42 Fugitive Dust Emission Factors: November 1, 2006.

NRC (U.S. Nuclear Regulatory Commission). Inspection Report #040-08964/09-001; inspection conducted at Smith Ranch ISR site March 17-19, 2009.

NRC (U.S. Nuclear Regulatory Commission). NUREG-0706, *Final Generic Environmental Impact Statement on Uranium Milling-Project M-25,* September 1980.

NRC (U.S. Nuclear Regulatory Commission). NUREG-1508, *Final Environmental Impact Statement to Construct and Operate the Crown Point Uranium Solution Mining Project Crown Point, New Mexico.* 1997.

NRC (U.S. Nuclear Regulatory Commission). NUREG-1569, *Standard Review Plan for In Situ Leach Uranium Extraction License Applications,* June 2003.

NRC (U.S. Nuclear Regulatory Commission). Regulatory Guide 3.59, *Methods for Estimating Radioactive and Toxic Airborne Source Terms for Uranium Milling Operations,* March 1987.

NRC (U.S. Nuclear Regulatory Commission). NUREG-0706, Final Generic Environmental Impact Statement on Uranium Milling, Project M-25, Summary and Text. 1980.

LLC (Lost Creek ISR Project). 2008. Lost Creek Project, South-Central Wyoming, Environmental Report, Application for US NRC Source Material License Rev1, pg 4-47.

Rio Algom Mining Corporation, Year 2000 Annual ALARA Review at Smith Ranch Facility, NRC Source License SUA-1548, conducted March 2001. ML010930149.pdf.

Thalheimer, Erich., 1999, Construction Noise Control Program and Mitigation Strategy at the Central Artery/Tunnel Project, Noise Control Engineering Journal Volume 48,

US Environmental Protection Agency (EPA, 1995), AP-42 Compilation of Air Pollutant Emission Factors, 5th Edition, Volume 1: Stationary Point and Area Sources; January 1995.

US Environmental Protection Agency (EPA, 2004), Exhaust and Crankcase Emission Factors for Nonroad Engine Modeling--Compression-Ignition; Final Rule Subpart IIII, April, 2004.

Wyoming Department of Environmental Quality/Air Quality Division (WDEQ/AQD), Fugitive Dust Emission Factors, January 24, 1979.

Wyoming Department of Environmental Quality/Air Quality Division (WDEQ/AQD), 2010, 2008 Annual Minor Source Inventory. Website: http://deq.state.wy.us/-aqd/ei.asp. Accessed November 2010.

WDOE (Wyoming Department of Employment). Labor Market Information Website: http://doe.state.wy.us/lmi/toc_202.html. Accessed December 2010.

WYDOT (Wyoming Department of Transportation). May, 2009, Highway traffic survey data provided by the Mapping Division of the WYDOT Planning Department

TABLE OF CONTENTS

8 ALTERNATIVES 8-1
8.1 Description of alternatives 8-1
8.1.1 No-Action Alternative 8-1
8.1.2 Proposed Action 8-2
8.1.3 Reasonable Alternatives Considered But Rejected 8-3
8.1.3.1 Open Pit and Underground Mining and Conventional Milling 8-3
8.1.3.2 Open Pit Mining 8-4
8.1.3.3 Underground Mining 8-5
8.1.3.4 Heap Leaching 8-5
8.1.4 Central Processing Plant versus Satellite Facilities 8-6
8.1.5 Lixiviant Chemistry 8-6
8.1.5.1 Acidic Leach Solutions 8-6
8.1.5.2 Ammonia-based Lixiviants 8-7
8.1.5.3 Other Potential Lixiviants 8-8
8.1.6 Groundwater Restoration 8-8
8.1.7 Alternate Byproduct Management Options 8-8
8.1.7.1.1 Deep Well Disposal 8-9
8.1.7.1.2 Mechanical Evaporation 8-10
8.1.7.1.3 Chemical Precipitation and Reverse Osmosis 8-10
8.1.7.1.4 Spray/Solar Evaporation 8-10
8.1.8 Uranium Processing Alternatives 8-11
8.1.8.1 Single Stage RO 8-11
8.1.8.2 Higgins Loop 8-12
8.1.9 Comparison of the Predicted Environmental Impacts 8-12
8.2 References 8-30

List of Tables

Table 8-1: Comparison of Treatment Alternatives 8-13
Table 8-2: Comparison of Predicted Environmental Impacts 8-15

8 ALTERNATIVES

8.1 Description of Alternatives

NRC regulations 10 CFR Part 51 and guidance at NUREG-1748 require this chapter to provide realistic alternatives to the Proposed Action which is of the proposed Reno Creek Project (Proposed Project). These alternatives include but are not limited to (1) the No-Action alternative; (2) the Proposed Action; and (3) reasonable alternatives although deemed not suitable. As noted in NUREG-1748 (Appendix F), the Proposed Action is considered the action under consideration while reasonable alternatives are those alternatives which are practicable from both technical and economic standpoints. These alternatives are discussed below. Comparable and/or further discussions can be found in:

- Section 1 and Addendum 1A of this TR (Proposed Activities);
- Section 7 of this TR and Section 4 of the ER (Environmental Effects/Impacts);
- Section 9 of this TR and Section 8 of the ER (Benefit-Cost Analysis);
- Section 1.1 of the ER (The Proposed Action); and
- Section 2 of the ER (Alternatives).

8.1.1 No-Action Alternative

Under the provisions of the National Environmental Policy Act (NEPA), as implemented by NRC in 10 CFR Part 51, AUC is required to assess the No-Action alternative. Under the No-Action alternative, NRC would not approve the Proposed Project combined Source and 11e.(2) Byproduct Materials License Application to construct, operate, and decommission the Proposed Project. Uranium ISR would not occur at the Proposed Project site and, accordingly, none of the associated potential impacts identified and analyzed as part of the Proposed Action would occur.

The No-Action alternative will result in significant negative financial impacts to AUC, and the loss of significant financial benefits to Campbell County, Wyoming and the surrounding communities. AUC has invested significant resources to develop the Proposed Project that will be irretrievably lost under the No-Action alternative. In addition, the No-Action alternative will adversely affect the economic growth of Campbell, Natrona and Converse Counties. As discussed in further detail in ER Section 8, the Proposed Project is expected to provide significant positive economic impacts to the local and State economies, including stakeholders with which AUC has surface leases and which own the mineral rights in the Proposed Project area.

A decision to not issue an NRC combined Source and 11e.(2) Byproduct Materials License to AUC would leave a large resource unavailable for domestic energy production. AUC is continuing to develop estimates of the resources at the Proposed Reno Creek Project and currently approximates the mineral resource is 15.7 million pounds of uranium.

According to the U.S. Energy Information Administration (EIA), the total domestic production of U_3O_8 in the first quarter of 2011 was only 1.06 million pounds, down seven percent from the previous quarter. In 2010, total domestic production was only 4.23 million pounds in contrast with domestic demand for approximately 47 million pounds U_3O_8 (EIA 2011). The Proposed Project represents an important new source of domestic uranium which is essential to provide a continuing source of fuel to US Nuclear power generation facilities. This additional domestic uranium production will help alleviate U.S. dependency on foreign suppliers located in Canada, Russia, Kazakhstan and Australia among others.

Under the No-Action alternative, baseline conditions will be influenced by natural processes and potentially by other industrial, commercial, and residential development in the area. Groundwater in the ore-bearing zone will remain unsuitable for drinking without any licensed ISR operation due to the high levels of naturally occurring radionuclides and other constituents described in Section 2.7 of the TR.

8.1.2 Proposed Action

As described in Section 3.1 of the TR, the Proposed Action involves AUC utilizing ISR processes and methodologies to recover uranium from ore bodies known to be amenable to such processes and methodologies. The ISR process is accomplished by installing a series of injection and recovery wells into the uranium ore bodies. Utilizing the injection wells, a carbonate/bicarbonate and oxidant leaching solution, or barren lixiviant, is injected into the ore body. To promote flow across the mineralized areas, corresponding recovery wells are used to pump water from the ore body, and allow for the collection of the uranium bearing carbonate leach, or pregnant lixiviant, solution. Once the pregnant lixiviant reaches the CPP, the uranium is removed from the lixiviant through the use of pressurized down flow ion exchange (IX) columns. Once the resin in an individual exchange column can no longer hold additional uranium ion complexes, the resin from that vessel is moved to another vessel where the uranium ion complexes are eluted from the resin. After the elution process is complete, the resin is moved back into the ion exchange column and re-introduced to the ion exchange process. After the lixiviant has passed through the ion exchange system, the solution is re-fortified with carbonate/bicarbonate and oxidant, making barren lixiviant, and can then be recycled to the injection wells for further uranium recovery.

The next phase of the process is further processing of the uranium rich solution to create a marketable product called yellowcake. This is accomplished by precipitating the dissolved uranium out of the eluent solution, dewatering the uranium solids, and drying the uranium slurry. The dried uranium product, yellowcake, is then packaged for safe transportation.

Initial Production Unit(s) for the Proposed Action will be developed concurrently with construction of the proposed CPP and ancillary ISR facilities. Groundwater restoration will take place in the initial Production Unit(s) when the uranium resource has been depleted such that it is no longer economically viable and, simultaneously, additional sequential wellfield development will occur. The goal of groundwater restoration will be to return the concentration of an identified constituent in the production zone consistent with baseline or a relevant MCL, whichever is higher, or to an alternate concentration limit (ACL) approved by NRC pursuant to 10 CFR Part 40, Appendix A, Criterion 5(B)(5) using Best Practicable Technology (BPT). Successful groundwater restoration of a pilot ISR facility was demonstrated within the Proposed Project area by the RME R&D with detailed discussions found in Addendum 1A. A detailed description of the Proposed Action is presented in Section 3 of this TR.

Following groundwater restoration activities, all injection and recovery wells will be reclaimed using WDEQ/LQD mandated plugging and abandonment procedures. In addition, a sequential land reclamation and re-vegetation program will be implemented on the site. This surface reclamation (i.e., decommissioning and decontamination (D&D) will be performed on all disturbed areas, including the plant, wellfields, ponds and roads such that upon license termination, the site will be released for unrestricted use. AUC will maintain financial assurance for groundwater restoration, plant decommissioning and surface reclamation until NRC approves license termination and site release. Financial assurance is discussed in Section 6.6 of this TR and in the Restoration Action Plan (RAP) in TR Addendum 6A.

8.1.3 Reasonable Alternatives Considered But Rejected

8.1.3.1 Open Pit and Underground Mining and Conventional Milling

As a part of the alternatives analysis conducted by AUC, three uranium recovery alternatives were considered:

1) Underground mining with conventional milling facilities;
2) Open pit mining with conventional milling facilities; and
3) Underground and open pit mining with heap leach facilities.

These represent the three currently available alternatives to ISR operations for uranium deposits in the Proposed Project area. These alternatives were eliminated based on economics, potential health, safety, and environmental impacts.

Conventional uranium recovery methods are less suitable for the recovery of lower grade ores due to the significant capital costs associated with the construction and operation of a conventional mine and associated mill. Further discussion of conventional mining/milling methods is provided below.

8.1.3.2 Open Pit Mining

Open pit mining requires the removal of all material covering the orebody. This overburden must be removed and stockpiled to allow removal of the uranium-bearing ore. Once removed, the ore must be transported to a conventional uranium mill for further processing and uranium recovery.

Open pit mining of the relatively low grade Proposed Project ore will require a capital investment that is not supported by the current uranium market. In relation to the Proposed Project the nearest conventional mill with an operating license that could receive uranium ore for toll milling is the Denison Mines White Mesa Mill located in Blanding, Utah, nearly 600 miles away. The combination of capital costs to develop an open pit mine at the Proposed Project, the operating and maintenance costs to mine the ore, and the transportation costs to Blanding, Utah, coupled with the accompanying processing payment, far exceed the current value of the ore as a feedstock for White Mesa. The nearest conventional uranium mill, Kennecott Uranium Corporation's Sweetwater Mill, located in the Great Divide Basin in Wyoming, is currently actively licensed but is in a standby status. However, if the Sweetwater Uranium Mill was currently licensed for operation, similar economic factors will preclude mining the Proposed Project deposit under reasonably projected current and future uranium market conditions.

In addition to the economic factors, environmental factors associated with open pit mining must also be considered. Open pit mining produces large piles of byproduct rock and, even with reclamation, would permanently alter the topography of the Proposed Project site. In addition, substantial dewatering of the pit on the order of several thousand gpm would be required to depress the potentiometric surface to allow mining. Large quantities of groundwater with naturally elevated ^{226}Ra and uranium would be discharged requiring treatment and necessary subsequent disposal of a radioactive solid 11e.(2) byproduct. Moreover, large volumes of groundwater would be consumed by this necessary dewatering process.

8.1.3.3 Underground Mining

Underground mining of the Proposed Project deposit would involve sinking recovery shafts into the vicinity of the ore bodies, horizontally driving crosscuts and drifts to the ore bodies at different levels, physically removing the ore and transporting the recovered ore to a conventional uranium mill for further processing. The economic factors involved with this alternative are similar to those mining in an open pit; although depending on depth to the deposit they can be significantly more costly and potentially more dangerous for workers.

From an environmental perspective, underground mining in conjunction with the associated milling process involves significantly higher risks to employees, the public, and the environment. Radiological exposure to personnel underground is increased, not only from the underground recovery process but also from milling and the resultant mill tailings. The milling process generates a significant amount of byproduct relative to the amount of ore processed and extensive mill tailings impoundments are needed for the disposal of these byproducts. The potential non-radiological health and safety risks to workers as well as the environmental impacts associated with underground mining are recognized as being considerably greater than those associated in ISR operations.

8.1.3.4 Heap Leaching

As an alternative to conventional milling, uranium is extracted from low-grade ore by heap leaching. This may be done if the uranium content is too low for the ore to be transported to and economically processed at a uranium mill. The crushed ore is mounded above grade on a leaching pad with a liner. The heap leaching pads must be constructed with the same standards as conventional mill tailings impoundments including a double liner per 10 CFR Part 40, Appendix A. A sulfuric or alkaline leaching agent is introduced on the top of the pile via a sprinkler or drip system which percolates down through the ore until it reaches the liner below the pile, where it is captured and pumped to a processing plant. After completion of the leaching process (within months to years), the leached ore is either left in place, or removed to a disposal site, and new ore is placed on the leach pad (so-called on/off scheme, or dynamic heap leaching).

After completion of heap leaching, the depleted materials are 11e.(2) byproduct materials that must be placed in a tailings impoundment. Mainly used experimentally in the 1970s and 1980s, the impacts from heap leaching may be less than those of conventional milling, but would still be substantial if only for the necessary required perpetual control of the 11e.(2) byproduct material. For these reasons, this alternative was deemed not suitable for the Proposed Project.

8.1.4 Central Processing Plant versus Satellite Facilities

Shipping uranium-laden resin is a standard industry practice for satellite plants in conjunction with central processing facilities. However, the option of shipping resin for processing and drying versus an on-site central processing facility was eliminated for the following reasons:

- Productivity and Efficiency: The Proposed Project anticipates a production rate of two million pounds U_3O_8 per year. The average load of resin would be 500 ft^3 at a loading rate of eight pounds/ft^3, or 4,000 pounds U_3O_8 per transfer (load). This would require a shipment of loaded resin to a separate facility approximately every 0.75 days. The Proposed Project will process the resin on-site and will not require the transport of resin to a processing facility;
- Environmental Health and Safety: The transport of resin versus on-site processing would increase the time an equipment operator would spend in transit and the potential of an accident or spill; and
- Operating Cost: Processing the uranium at the proposed CPP will reduce not only the transportation cost, but will reduce the number of trucks, trailers and equipment operators. Standby materials, such as resin and transport equipment, will also not be required. In addition, the cost for toll processing of resin will be recovered against the plant investment over the life of the Proposed Project, yielding a more valuable asset to be used in processing for other projects or toll processing of resin.

8.1.5 Lixiviant Chemistry

AUC proposes to use a sodium bicarbonate lixiviant which is an alkaline solution. Where the groundwater contains bicarbonate, an alkaline lixiviant mobilizes fewer potentially deleterious constituents from the ore body and requires less chemical addition than an acidic lixiviant. Also, test results at other, similar uranium ISR projects indicate only limited success with acidic lixiviants, while the sodium bicarbonate has proven highly successful at commercial ISR operations in Wyoming to date. Another alternate leach solution is an ammonium carbonate solution which has been used in ISR programs at other locations; however, at those locations operators have experienced difficulty in restoring and stabilizing the aquifer. Therefore, these alternative solutions were excluded from AUC consideration for the Proposed Project.

8.1.5.1 Acidic Leach Solutions

Acid-based lixiviants, such as sulfuric acid, have been used in the United States and are widely used internationally. Acid leach has historically produced a majority of the

world's ISR production. Acid-based lixiviants generally achieve a higher degree of recovery (70-90 percent), better leaching kinetics, and a shorter leaching period. However, acid-based lixiviants dissolve heavy metals and other solids associated with uranium in the host rock and other chemical constituents that may require additional groundwater restoration (IAEA, 2001).

In the United States, acid-based lixiviants have been used only for small-scale research and development (R&D) operations including an ISR pilot plant in the Proposed Project area. In January 1979, RME commenced an ISR testing program with the completion of a 100 gallon per minute (GPM) pilot plant in which two test patterns (Pattern 1 and Pattern 2) were installed and operated. Sulfuric acid lixiviant was tested first because of the higher recoveries indicated in the amenability tests. Pattern I testing began in February 1979 and was terminated in November 1979 because results from this pattern were unsatisfactory. Severe permeability loss resulted from high levels of calcium mobilized by the acid precipitating as gypsum within the ore sand void spaces, sealing off the formation to the point operations had to be curtailed. For this reason, acid-based lixiviants have not been found to be as cost effective as alkaline lixiviants, particularly in light of difficulties in achieving acceptable groundwater restoration results. A more detailed discussion on specific historical ISR operations of Rocky Mountain Energy's (RME) Research and Development (R&D) efforts can be found in Addendum 1-A of the TR.

The commercial use of alkaline lixiviants in the United States is related to the need to restore affected groundwater and alkaline lixiviant recovery zones are recognized to be technically easier to restore. For this reason, a commercial ISR facility using an acid-based lixiviant has not been developed in the United States and AUC determined an acid-based lixiviant is not a suitable alternative for the Proposed Project.

8.1.5.2 Ammonia-based Lixiviants

Ammonia-based lixiviants have been used in the United States in Texas and Wyoming. However, operational experience has shown ammonia tends to adsorb onto clay minerals in the subsurface and then desorbs slowly from the clay during restoration, therefore requires much larger volume of groundwater be removed and processed during aquifer restoration (Mudd, 2000). In addition, concerns arose in the early 1980s over the potential post recovery oxidation of ammonia in the groundwater to form nitrate and nitrite species. When combined with the slow desorption from clay this potential concern resulted in a movement away from ammonia-based lixiviants including an outright ban on their use in Texas. Due to the additional consumptive use of groundwater to meet groundwater restoration requirements, AUC determined that an ammonia-based lixiviant is not a suitable alternative for the Proposed Project.

8.1.5.3 Other Potential Lixiviants

Other lixiviants which have been evaluated in laboratory scale and limited field tests include potassium based lixiviants, a range of oxidants including air, iodine, potassium permanganate, and a variety of trace additives such as clay stabilizing agents to increase the selective oxidation and mobilization of uranium minerals. To date, these alternatives have consistently proven to be far less economical than the planned oxidant-sodium bicarbonate system.

8.1.6 Groundwater Restoration

The groundwater restoration techniques proposed by AUC have been successful at other ISR operations in Wyoming. Groundwater sweep, permeate/reductant injection and groundwater treatment have successfully restored the groundwater consistant with pre-mining quality or designated regulatory limits. No practicable alternative(s) to the groundwater restoration method noted herein currently is available. The NRC and the WDEQ consider the method proposed to be the Best Practicable Technology available.

8.1.7 Alternate 11e.(2) Byproduct Management Options

Liquid byproducts generated from production and restoration activities generally are managed at ISR facilities by solar evaporation ponds, deep well injection, land application or some combination thereof. The use of deep byproduct disposal well(s) is considered by AUC to be the best alternative to dispose of these types of byproducts. The Proposed Project deep injection well(s) will isolate liquid 11e.(2) byproducts generated by the project from any underground source of drinking water as defined by the Safe Drinking Water Act. These wells must be authorized by the State of Wyoming under an appropriate underground injection control (UIC) Permit. AUC has submitted a Class I Permit that is under review by the WDEQ which can be found in Addendum 4-B of the TR.

AUC has considered a range of liquid treatment/disposal methods for use at the Proposed Project. The alternatives analysis considers three primary liquid11e.(2) byproduct streams from ISR operation:

- Plant eluant;
- Wellfield purge water; and
- RO reject produced during wellfield restoration.

A “design basis influent” was developed for the three typical ISR liquid 11e.(2) byproduct streams to be managed as well as the projected water quality characterization

for blending the liquid 11e.(2) byproduct. The alternatives analysis was completed stepwise with the development of a common evaluation basis, screening of potentially applicable treatment technologies, development of candidate treatment trains, and technical and cost evaluation of the treatment trains. The initial screening of treatment technologies includes evaluation of each technology for implementability, flexibility, maintainability, and relative capital and operating costs. The retained technologies have been developed into treatment options and then the comparative evaluation of each option was conducted in parallel for each byproduct stream.

Both capital and annual operating costs were developed for each option in order to calculate a net present value. The costs developed were comparative order-of-magnitude estimates intended for comparison purposes and were based on an ISR model case that could then be scaled to a particular operation. Costs that were common to all options such as regulatory reporting, project management, and administrative costs were not included.

Land application is practicable and historically has been used at some ISR facilities as a liquid byproduct treatment/disposal method, generally in conjunction with deep well disposal and/or spray/solar evaporation. Discharges through land application may have to be treated to meet surface water quality standards and 10CFR20 Appendix B Table 2 and, perhaps, soil concentration limits to assure that there is no potential for future environmental liability due to accumulation of contaminants in the soil or groundwater below the land application surface area. For this reason land application is not chosen in the screening process for further consideration at this time.

The following discussion provides a description of each treatment/disposal method considered and the relevant characteristics that led to the selection of deep well injection as the preferred alternative.

8.1.7.1 Deep Well Disposal

On any site where geologic and hydrogeologic conditions will allow, deep well injection is the preferred method for liquid 11e.(2) byproduct material disposal. Deep well injection is permitted primarily on the condition that potential sources of drinking water will not be adversely impacted by disposal operations, rather than by the quality and characteristics of the liquid 11e.(2) byproduct material injected. NRC, however, requires characterization of the liquid 11e.(2) byproduct stream with respect to worker health and safety and analyses of potential consequences of leaks or spills. Accordingly, deep well "discharge standards" as incorporated into a permit are based on the operator's characterization of the liquid 11e.(2) byproduct material stream. This method is considered potentially suitable for all ISR liquid 11e.(2) byproduct streams, , and has been used by AUC in this license application..

8.1.7.2 Mechanical Evaporation

Mechanical evaporation utilizing equipment that requires either gas or electric power was considered. Evaporation is energy-intensive, but produces the smallest possible volume of liquid 11e.(2) byproduct for disposal. Disposal costs per unit volume can be evaluated against the evaporator operations cost to determine the economic viability of evaporation as a post-treatment step. For this evaluation it is assumed that a volume reduction of approximately 95 percent is achieved. This method is considered potentially suitable for all ISR liquid 11e.(2) byproduct material streams but results in 11e.(2) solids byproduct material that must be managed.

8.1.7.3 Chemical Precipitation and Reverse Osmosis

Chemical precipitation and reverse osmosis which can utilize the chemical precipitation step to either pre-treat the byproduct water for more efficient operation of the reverse osmosis system or use the chemical precipitation step to treat the brine was considered. Both brine residual and sludge are formed. This method is considered potentially suitable for all ISR 11e.(2) byproduct streams.

8.1.7.4 Spray/Solar Evaporation

Spray/solar evaporation utilizing natural evaporation and enhancing the rate by spraying water to increase the surface area, which is assumed to provide a 95 percent volume reduction for this evaluation, was considered. While solar evaporation is potentially a suitable alternative, the evaporation rate and length of the evaporation season must be considered in parallel with the flow rate of water to be treated. Pond size may become unreasonably large if the evaporation rate is low. If sprayers are used for evaporation enhancement, overspray due to high winds must be controlled. Additional issues with ponds include windblown accumulations of dust and dirt and the eventual need to remove salts and accumulated solids then managed as soild 11e.(2) byproduct material.

Table 8-1 provides a summary of the technical evaluation of candidate water treatment and management options for a combination of the process byproduct waters. For each of the alternatives considered, the table lists the advantages and disadvantages, the chemicals required, and environmental and safety considerations.

As shown by Table 8-1, the deep well option presents environmental, safety and health benefits including the following:

- Minimize worker exposure to concentrated brine streams that may contain uranium and byproduct material;

- Minimize the required footprint and therefore land disturbed by the system;
- Minimize the residual, either solid or liquid, stored onsite and also shipped offsite. There is no offsite transportation of residue required with a deep well; and
- Minimize the requirement for chemicals and other commodities.

Based on this comparative evaluation the deep well water management option for ISR liquid 11e.(2) byproduct provides clear economic and environmental advantages. All solid materials will be properly managed. Solid non-11e.(2)material will be disposed in an off-site solid material landfill permitted by the county in which it is located. All solid 11e.(2) byproduct material will be shipped to an NRC or Agreement State licensed facility for disposal.

8.1.8 Uranium Processing Alternatives

8.1.8.1 Single Stage RO

The Proposed Action includes two phases of RO for treatment to minimize the amount of liquid 11e.(2) byproduct material. The brine generated from the production and restoration RO units will be passed through the secondary RO unit. Brine from the secondary RO unit will be discharged to the deep disposal wells, while permeate will be recycled to wellfields undergoing groundwater restoration or used as CPP process make-up water.

An alternative considered by AUC was to use only one phase of RO treatment. Permeate from this single-stage RO would be handled just like the permeate described above, but the brine would be discharged directly to the deep disposal wells rather than being passed through a second phase of RO treatment. The two-stage RO treatment creates about one-half the amount of brine as a single-stage treatment and allows much more of the process byproduct water to be converted to permeate. This permeate will be put to beneficial use through injection into wellfields undergoing groundwater restoration and plant makeup water. Reducing the amount of brine through the use of two-stage RO treatment reduces the amount of water disposed of by deep well injection. An additional advantage of using a two-stage RO system is the increased volume of permeate produced which will be recycled to wellfields undergoing groundwater restoration thereby decreasing the overall percent bleed during restoration. The advantages of two-stage RO treatment in reducing brine volume and providing more permeate for beneficial uses, the single phase of RO treatment was not further considered by AUC.

8.1.8.2 Higgins Loop

In coordination with the NRC GEIS, AUC's Proposed Project includes the use of a pressurized down-flow IX system. With this IX system the radon present in the pregnant lixiviant is retained in solution and returned back underground in the re-fortified barren lixiviant. This provides for a significantly reduced potential for occupational and/or public exposure to radon and its progeny.

An alternative considered by AUC was to utilize a Higgins Loop IX system. The Higgins Loops is a closed-loop system in which uranium-laden resin advances through the system in the different stages of adsorption, backwash, regeneration, and rinse in preparation for another adsorption cycle. The IX system is a vertical cylindrical loop, containing a packed bed of resin that is separated into four operating zones by butterfly, or "loop" valves. These operating zones, adsorption, regeneration, backwashing and pulsing, function like four separate vessels thus increasing the resin loading efficiency.

The Higgins loop resin exchange process is unfavorable as may result in significant attrition of the resin. The flow system used to load and strip the resin of uranium generates a significant back pressure. The back pressure can result in excessive compressive forces on the resin itself and results in damage to the resin particles. The damaged resin particles will often increase the back pressure in the system, resulting in accelerated damage to the resin. Additionally, the cycling of the resin between the loading chamber and the stripping chamber can result in damage to the resin as the resin particles experience significant physical impact with other resin particles, the chamber walls and plumbing, valves, etc. The damage to and loss of the resin results in significant additional costs for replacement resin.

8.1.9 Comparison of the Predicted Environmental Impacts

As discussed above, AUC has identified and developed the Proposed Action as the best approach to recovering uranium resources from the Proposed Project. Table 8-2 provides a summary of the potential environmental impacts for the No-Action alternative (Section 8.1.1), the Proposed Action (Section 8.1.2), and the reasonable alternatives although deemed not suitable (Section 8.1.3). The predicted impacts for the recovery alternatives discussed in Section 2.1.3 are not included for comparison because these alternatives were eliminated due to potentially significant adverse occupational, environmental and economic impacts. Section 4 of this ER provides a more detailed discussion of potential environmental impacts of the Proposed Action and No-Action alternatives.

Table 8-1: Comparison of Treatment Alternatives

Evaluation Factor	Deep Well	Mechanical Evaporation	Chemical Precipitation/RO	Spray/Solar Evaporation
Advantages	Economical, no residuals yielding no onsite storage or offsite transport required, no concentrated chemicals required, minimal operating requirements, minimal space requirements, flexible with regard to water quality and disposal rate.	Produces very low volume brine for disposal or further processing by solidification or to dry salt for zero liquid discharge, produces treated water with essentially zero contaminants (distilled water), can be operated campaign style.	Broadly applicable to metals and common anion contaminants, chemical precipitation pretreatment allows operation of RO system to produce less brine, produces high quality treated water stream for reuse or discharge.	Primary treatment is simple system consisting of ponds, pumps, piping and nozzles. No complicated equipment, low capital cost. Commonly used for management of brine in arid climates. Can allow complete evaporation to dryness or remove low volume brine for solidification and offsite disposal.
Disadvantages	Site geology will dictate reasonably achievable disposal flow rate. Site hydrogeology (presence of potential drinking water aquifers) will dictate disposal well depth. Permitting process may be lengthy. Attention to water chemistry and need for antiscalant is required to minimize wellscreen scaling and fouling issues. Changes in water chemistry may require re-permitting. No recovery of treated water.	Long equipment lead, distillate is corrosive and would need conditioning for reuse or discharge, high capital and power cost, concentrates radionuclides into the evaporator brine by 20 times or more.	Produces both liquid and solids residues with higher volume liquid residues that other options. Highest labor. Requires bulk concentrated chemicals. Highest truck traffic of options evaluated for chemical deliveries and residuals transport.	Treatment rate dependent upon weather. “Overdesign” required to account for weather shutdowns. Potential for birds and other wildlife to drink and contact water. Treatment time affected by wind with high potential for overspray. Reduced efficiency and operating difficulty due to freezing in winter so large storage capacity required. Windborne dust and dirt reduce efficiency and increase maintenance (cleanouts). Large quantities of chemicals required for solidification and large quantities of solidified brine produced for offsite disposal.

Table 8-1: Comparison of Treatment Alternatives (continued)

Evaluation Factor	Deep Well	Mechanical Evaporation	Chemical Precipitation/RO	Spray/Solar Evaporation
Chemicals Required	None to minimal. Antiscalent may be required depending on water characteristics.	Minimal for evaporator and limited to antiscalent compounds and some cleaning products. Lime, soda ash, and polymer required for solidification.	Lime; Concentrated acid, Polymer; antiscalent and RO cleaning chemicals; Lime, soda ash and polymer for solidification.	Lime, soda ash, and polymer for solidification.
Environmental /Safety	Safest and lowest environmental impact of options. Smallest carbon footprint with low operating power requirement and no truck traffic. No residuals stored onsite, no potential for wildlife exposure to holding ponds. No requirement for chemicals. No potential exposure to concentrated residues.	Large carbon footprint with over 10 times the power requirement of a deep well and 20 times the power requirement of the RO/precipitation option. Requires high operating temperatures and pressures. Low to moderate footprint primarily for brine storage tanks. Requires storage of brine as feed to solidification system and offsite transportation of solidified brine stream. High chemical requirements for solidification chemicals. High operating temperature and pressure.	Moderate carbon footprint with the lowest operating power requirement but the most truck traffic of any option evaluated. Handling of highest quantity of residues required including onsite storage and offsite disposal. Higher labor requirements with more potential for exposure to chemicals and residuals during sludge dewatering operations and residuals management.	Moderate carbon footprint with greater the power required of a deep well and some truck traffic for offsite brine disposal. Greatest risk to wildlife due to large volume ponds. Greatest potential for release of salts from overspray. Potential for exposure to labor from the sprays.

Table 8-2: Comparison of Predicted Environmental Impacts

Potential Impact	Alternative	Potential Impacts
Potential Land Surface Impacts	Proposed Action	Surface disturbance will range from short term for construction of well pads and utility/pipeline corridors that will be reclaimed after construction to long term for roads, buildings, parking areas, and backup pond that will remain until final D&D. All disturbance will be reclaimed to be suitable for pre-construction uses. Disturbance areas and values are listed in ER Table 1-3.
	No Action	None
	Conventional Mining/Milling Including Heap Leach	Open-pit mining would result in significant surface disturbance due to the pit overburden stockpiling and would create permanent topographic changes, increase fugitive dust, and the potential for subsidence. Both heap leaching and open-pit mining methods require crushing the ore and disposing of the tailings, creating long term or permanent 11e.(2) byproduct material.
	CPP versus Satellite Plant	Satellite plant would result in a smaller surface disturbance due the smaller facility size than the proposed central processing plant.
	Use of Alternate Lixiviants	Same as Proposed Action
	Alternate Byproduct Management	Disposal in evaporation ponds would result in slightly more surface disturbance than the proposed backup pond due to the increased surface area to aid in the evaporation process.
	Uranium Processing Alternatives	Use of single-stage rather than the proposed two-stage RO system would create approximately twice as much brine as the Proposed Action, requiring greater disposal capacity for liquid 11e.(2) byproduct material disposal.

Table 8-2: Comparison of Predicted Environmental Impacts (Continued)

Potential Impact	Alternative	Potential Impacts
Potential Land Use Impacts	Proposed Action	Small impacts on agricultural production (livestock grazing) and hunting on up to 481 acres for duration of the Proposed Project.
	No Action	None
	Conventional Mining/Milling Including Heap Leach	Area used for pit, ramps, haul roads, overburden stockpiles, and topsoil stockpiles would be restricted from any other uses for the duration of the Proposed Project.
	CPP versus Satellite Plant	Same as Proposed Action
	Use of Alternate Lixiviants	Same as Proposed Action
	Alternate Byproduct Management	Same as Proposed Action plus additional land use impact from installation of evaporation ponds and/or land application areas.
	Uranium Processing Alternatives	Same as Proposed Action

Table 8-2: Comparison of Predicted Environmental Impacts (Continued)

Potential Impact	Alternative	Potential Impacts
Potential Transportation Impacts	Proposed Action	An estimated 23.3 acres will be disturbed to construct infrastructure access roads(secondary and tertiary). A small risk of spills of process chemicals and small quantities of 11e.(2) byproduct material during the project life.
	No Action	None
	Conventional Mining/Milling Including Heap Leach	Conventional mining methods would require more employees which will increase traffic on local roads.
	CPP versus Satellite Plant	A satellite plant would increase the traffic volume due to the shipment of loaded resin to a central processing facility
	Use of Alternate Lixiviants	Same as Proposed Action
	Alternate Byproduct Management	Same as Proposed Action
	Uranium Processing Alternatives	Same as Proposed Action

Table 8-2: Comparison of Predicted Environmental Impacts (Continued)

Potential Impact	Alternative	Potential Impacts
Potential Geology and Soil Impacts	Proposed Action	Approximately 154 acres (short and long term) will potentially be disturbed over the life of the Proposed Project. Topsoil will be stripped for construction of recovery facilities and access to these facilities. Topsoil will be stockpiled and seeded with a temporary seed mix to protect from erosion until it is replaced during reclamation. Once replaced, topsoil will be revegetated and support pre-construction land use resulting in no significant impacts on geology. Disturbance areas and values are listed in ER Table 1-3.
	No Action	None
	Conventional Mining/Milling Including Heap Leach	Open pit mining would have significant impacts on geology and soil since all overburden from the surface to the ore zones would be removed. The overburden would be stockpiled and seeded with a temporary seed mix to protect form erosion until replaced during reclamation.
	CPP versus Satellite Plant	Same as the Proposed Action
	Use of Alternate Lixiviants	Same as the Proposed Action
	Alternate Byproduct Management	Evaporation ponds would require a larger surface area disturbance than the Proposed Action resulting in more topsoil removal and stockpiling.
	Uranium Processing Alternatives	Use of single-stage RO treatment would require more DDWs for additional liquid 11e.(2) byproduct disposal which would require more topsoil to be removed

Table 8-2: Comparison of Predicted Environmental Impacts (Continued)

Potential Impact	Alternative	Potential Impacts
Potential Surface Water Impacts	Proposed Action	Surface disturbance may pose a small risk of increased sediment load to ephemeral drainages. Minimal risk of fuel or chemical spills.
	No Action	None
	Alternate Milling Method	Open pit mining would alter the surface drainage network requiring the restoration of all drainages during reclamation. The surface disturbance is significantly increased from the Proposed Action and would pose a larger risk of sediment load to surface waters. In addition, the potential for large amounts of groundwater to be discharged from the open pit would impact ephemeral drainages that only see flow during runoff or storm events.
	CPP versus Satellite Plant	Same as the Proposed Action
	Use of Alternate Lixiviants	The potential spill of an acid or ammonia based lixiviant would have more of an adverse effect on surface water than a sodium-bicarbonate based lixiviant.
	Alternate Byproduct Management	Evaporation ponds would disturb more surface area resulting in the increased risk of sediment load to drainages.
	Uranium Processing Alternatives	Same as the Proposed Action

Table 8-2: Comparison of Predicted Environmental Impacts (Continued)

Potential Impact	Alternative	Potential Impacts
Potential Groundwater Impacts	Proposed Action	Excursion of lixiviant may have a small potential to contaminate adjacent groundwater. Minimal risk of fuel or chemical spills leaching to shallow groundwater. Small net withdrawal of water from the ore zone aquifer to contain fluids. Water consumed will naturally recharge with time.
	No Action	None
	Alternate Milling Method	Open-pit and underground mining would drastically alter the hydrogeology of the area. All aquifers from the bottom of the ore zone to the surface would be exposed. Groundwater exposed in pit would need to be discharged altering surface water flow.
	CPP versus Satellite Plant	Same as the Proposed Action
	Use of Alternate Lixiviants	The potential migration of an acid or ammonia based lixiviant would have more of an adverse effect on groundwater than a sodium-bicarbonate based lixiviant.
	Alternate Byproduct Management	Same as the Proposed Action
	Uranium Processing Alternatives	Use of single-stage RO or not treating groundwater sweep recovery solutions with RO would increase net amount of groundwater withdrawn from ore zone aquifer.

Table 8-2: Comparison of Predicted Environmental Impacts (Continued)

Potential Impact	Alternative	Potential Impacts
Potential Ecological Impacts	Proposed Action	BMPs will minimize wildlife access to lined backup pond and storage facilities. No threatened or endangered species will be impacted as none where identified in baseline studies. Loss of habitat will be minimal and temporary.
	No Action	None
	Alternate Milling Method	Open pit mining would disturb much more habitat by increased surface disturbance.
	CPP versus Satellite Plant	Same as the Proposed Action
	Use of Alternate Lixiviants	Same as the Proposed Action
	Alternate Byproduct Management	More habitat loss could result due to increased impoundment size.
	Uranium Processing Alternatives	Same as the Proposed Action

Table 8-2: Comparison of Predicted Environmental Impacts (Continued)

Potential Impact	Alternative	Potential Impacts
Potential Air Quality Impacts	Proposed Action	Slight increases in fugitive dust will occur, primarily during construction. An increase in fugitive dusts over baseline levels will occur during the life of the project.
	No Action	None
	Alternate Milling Method	Open-pit mining would increase fugitive dust emissions by exposing much more disturbed soil surface. Large equipment would increase gaseous greenhouse emissions. Tailings would increase risk of airborne contaminants, including radioactive materials.
	CPP versus Satellite Plant	The potential for impact to air quality increases due to the potential exposure to dried yellowcake particulates from an accident.
	Use of Alternate Lixiviants	Same as Proposed Action, possibly for an extended amount of time if alternate lixiviant requires more time for restoration.
	Alternate Byproduct Management	Increased emissions may occur if larger lined evaporation ponds are constructed.
	Uranium Processing Alternatives	Same as Proposed Action

Table 8-2: Comparison of Predicted Environmental Impacts (Continued)

Potential Impact	Alternative	Potential Impacts
Potential Noise Impacts	Proposed Action	Noise will increase over background levels. Nearest residence could experience noise levels above the annoyance (55 dBA) threshold during construction.
	No Action	None
	Alternate Milling Method	Increased noise levels would result from open-pit mining due to heavy equipment operation.
	CPP versus Satellite Plant	A CPP would potentially produce less noise with the absence of resin shipping trucks.
	Use of Alternate Lixiviants	Same as Proposed Action, possibly for an extended amount of time if alternate lixiviant requires more time for restoration.
	Alternate Byproduct Management	Same as Proposed Action
	Uranium Processing Alternatives	Same as Proposed Action

Table 8-2: Comparison of Predicted Environmental Impacts (Continued)

Potential Impact	Alternative	Potential Impacts
Potential Historical and Cultural Impacts	Proposed Action	Potential impacts will be minimal, since NRHP eligible sites do not exist on the Proposed Project site. A stop-work provision will be used if any previously undiscovered cultural resources are found.
	No Action	None
	Alternate Milling Method	Open-pit mining disturbs more area than that of ISR facilities increasing the chance of disturbing unknown cultural resources.
	CPP versus Satellite Plant	Same as Proposed Action
	Use of Alternate Lixiviants	Same as Proposed Action
	Alternate Byproduct Management	Similar to Proposed Action, although potential impacts could increase with increased evaporation pond size.
	Uranium Processing Alternatives	Same as Proposed Action

Table 8-2: Comparison of Predicted Environmental Impacts (Continued)

Potential Impact	Alternative	Potential Impacts
Potential Visual/Scenic Impacts	Proposed Action	Minimal visual impacts will result from new structures and equipment but will remain consistent with the BLM visual resource classification of the area.
	No Action	None
	Alternate Milling Method	Open-pit mining would create a significant visual impact with large stockpiles and a large tailings impoundment.
	CPP versus Satellite Plant	Similar to the Proposed Action
	Use of Alternate Lixiviants	Same as Proposed Action, possibly for an extended amount of time if alternate lixiviant requires more time for restoration.
	Alternate Byproduct Management	More and larger impoundments than required under the Proposed Action would have localized visual impacts.
	Uranium Processing Alternatives	Same as Proposed Action

Table 8-2: Comparison of Predicted Environmental Impacts (Continued)

Potential Impact	Alternative	Potential Impacts
Potential Socioeconomic Impacts	Proposed Action	Most of the workforce is expected to come from the local area minimizing impacts on housing and local services. Project would have slight, positive benefit to the State on severance tax, royalty, and sales and use tax collections and moderate benefits to Campbell County on property and production taxes. Remoteness of the site might slightly increase the need for increased emergency services (fire and ambulance service).
	No Action	None
	Alternate Milling Method	Conventional mining and milling methods require more employees than ISR facilities. Revenues to the State, which are based on production, would be similar to Proposed Action, but Campbell County revenues from property taxes would be more due to additional equipment required for conventional mining.
	CPP versus Satellite Plant	A CPP would require more employees than a satellite facility which would have a direct positive impact on the local economy
	Use of Alternate Lixiviants	Same as Proposed Action, possibly for an extended amount of time if alternate lixiviant requires more time for restoration.
	Alternate Byproduct Management	Same as Proposed Action possibly extending the construction period due to the need to construct more impoundments.
	Uranium Processing Alternatives	Same as Proposed Action

Table 8-2: Comparison of Predicted Environmental Impacts (Continued)

Potential Impact	Alternative	Potential Impacts
Potential Non-Radiological Impacts	Proposed Action	Minimal risk of public exposure through chemical leaks and spills will be mitigated by employing BMPs.
	No Action	None
	Alternate Milling Method	Conventional mining and milling methods have an increased risk and more severe accidents compared to that of the Proposed Action. Safety hazards are compounded due to the depths of the mineral ore to be recovered.
	CPP versus Satellite Plant	A CPP has additional equipment and chemicals that could present safety hazards not found in a satellite facility
	Use of Alternate Lixiviants	Similar to Proposed Action; acid or ammonia-based lixiviant would introduce additional non-radiological health risks.
	Alternate Byproduct Management	Same as Proposed Action
	Uranium Processing Alternatives	Same as Proposed Action

Table 8-2: Comparison of Predicted Environmental Impacts (Continued)

Potential Impact	Alternative	Potential Impacts
Potential Radiological Impacts	Proposed Action	The estimated radiological impacts resulting from routine site activities will be compared to applicable public dose limits as well as naturally occurring background levels.
	No Action	None
	Alternate Milling Method	Radiological exposure to the personnel in these processes is increased, not only from the mining process but also from milling and the resultant mill tailings. The milling process generates a significant amount of byproduct relative to the amount of ore processed. Extensive mill tailings impoundments are needed for the disposal of these byproducts.
	CPP versus Satellite Plant	Same as Proposed Action
	Use of Alternate Lixiviants	Same as Proposed Action
	Alternate Byproduct Management	Same as Proposed Action
	Uranium Processing Alternatives	Same as Proposed Action

Table 8-2: Comparison of Predicted Environmental Impacts (Continued)

Potential Impact	Alternative	Potential Impacts
Potential Byproduct Management Impacts	Proposed Action	The Proposed Project deep injection well(s) will isolate liquid byproducts generated by the project from any underground source of drinking water. A slight risk of exposure to the public during transportation exists though will be minimized by employing BMPs.
	No Action	None
	Alternate Milling Method	Conventional mining and milling creates considerably more waste than ISR, including solid 11e.(2) byproduct material (tailings), and residue left from the treatment of water.
	CPP versus Satellite Plant	A CPP will potentially create more 11e.(2) and non-11e.(2) byproducts than a satellite plant requiring more byproduct to be transported and disposed at a licensed facility.
	Use of Alternate Lixiviants	Same as Proposed Action
	Alternate Byproduct Management	Evaporation ponds accumulate salts and windblown material such as dust that will need eventual removal increasing the risk for potential impacts during transport to an off-site facility.
	Uranium Processing Alternatives	Same as Proposed Action

8.2 References

EIA (U.S., Energy Information Administration). Summary Production Statistics of the U.S. Uranium Industry. Website: www.eia.doe.gov/cneaf/nuclear/dupr/-usummary.html. Accessed January 2011.

EIA (U.S., Energy Information Administration). 2010 Uranium Market Annual Report, Website: www.eia.gov/uranium/production/annual. Accessed January 2011.

EIA (U.S., Energy Information Administration) 2011 Quarterly Domestic Uranium Production Report. Website: www.eia.gov/uranium-/production/quarterly. Accessed July 2011.

IAEA (International Atomic Energy Agency). "Manual of Acid In Situ Leach Uranium Mining Technology."IAEA-TECDOC-1239. Vienna, Austria, August 2001.

Mudd, G.M. "Acid In Situ Leach Uranium Mining: 1 - USA and Australia." Tailings & Mine Waste 2000, Fort Collins, CO. January 2000.

NRC (U.S. Nuclear Regulatory Commission). *Draft Environmental Statement Related to the Operation of the Teton Project*, NUREG-0925, June 1982. Para. 2.3.5.

TABLE OF CONTENTS

9 BENEFIT-COST ANALYSIS 9-1
9.1 Benefit-Cost Analysis General Background 9-1
9.2 Alternatives and Assumptions 9-2
9.2.1 Development Alternatives 9-2
9.2.1.1 No Action Alternative 9-2
9.2.1.2 Proposed Action 9-2
9.2.2 Key Assumptions and Limitations 9-2
9.2.2.1 Operating Life of Proposed Project 9-3
9.2.2.2 Discount Rate 9-3
9.2.2.3 Scope of Potential Impacts 9-3
9.2.2.4 Potential Non-Monetary Impacts and Benefit-Cost Ratio 9-3
9.3 Potential Economic Benefits of Project Construction and Operation 9-4
9.3.1 IMPLAN Input Data 9-4
9.3.2 Potential Employment Benefits 9-6
9.3.3 Potential State and Local Tax Revenue Benefits 9-6
9.4 Potential External Costs of Project Construction and Operation 9-7
9.4.1 Short Term External Costs 9-8
9.4.1.1 Housing Shortages 9-8
9.4.1.2 Impacts on Schools and Other Public Services 9-9
9.4.1.3 Impacts on Noise and Congestion 9-9
9.4.2 Long Term External Costs 9-10
9.4.2.1 Impairment of Recreational and Aesthetic Values 9-10
9.4.2.2 Land Disturbance 9-10
9.4.2.3 Habitat Disturbance 9-11
9.4.3 Groundwater Impacts 9-11
9.4.4 Radiological Impacts 9-11
9.5 Benefit-Cost Summary 9-12
9.6 References 9-19

List of Tables

Table 9-1: Total Operations Direct AUC Staff Positions 9-14
Table 9-2: IMPLAN Input Data for Proposed Project Construction and Decommission 9-15
Table 9-3: Employment Effects of the Proposed Project 9-16
Table 9-4: State and Local Tax Revenue IMPLAN Projections 9-17
Table 9-5: Summary of Benefits and Costs for the Proposed Project 9-18

9 BENEFIT-COST ANALYSIS

9.1 Benefit-Cost Analysis General Background

Demand for uranium to fuel nuclear power plants is growing rapidly as the nuclear industry expands. The world's appetite for energy is expanding at a fast pace, driven largely by modernization of the developing nations. At the same time as total energy demand is growing, there is a growing impetus to reduce the burning of carbon-based fuels. Currently, nuclear energy provides six percent of the world's total energy supply, including 15 percent of the world's electricity. Some countries rely heavily on the nuclear industry. In the United States nearly 20 percent of the electricity is produced from nuclear power compared to France where it is 78 percent, according to the U.S. Energy Information Administration (EIA, 2011).

Approximately 80 percent of the uranium used for nuclear reactors comes from mines and mills, including nearly 30 percent from ISR. The long term need for production of uranium is strong for the operation of both current and future nuclear power reactors. In reactor licensing evaluations, the benefits of the energy produced are weighed against environmental costs, including a prorated share of the environmental costs of the uranium fuel cycle. This section summarizes costs and benefits of the proposed development of the Proposed Project. The Benefit-Cost Analysis (BCA) discussed in this section has established that the proposed development of a new uranium ISR facility at the Proposed Project is potentially a cost-effective effort to undertake and will provide a net economic benefit to the State of Wyoming.

The analysis described in this section has been tailored to meet the requirements established by the NRC in NUREG-1569 (Section 9). It includes a description of economic costs and benefits resulting from construction, operation, restoration, reclamation, and decommissioning of the proposed facility and a discussion of temporary and long-term external costs. Where possible, benefit and cost estimates are monetized; however, reliable monetary estimates for some potential impacts are not readily available so the narrative examines several factors in non-monetary or qualitative terms.

The following analyses use IMPLAN (IMpact Analysis for PLANning), a standard industry software package that models the economic impacts of capital intensive projects, to calculate the potential economic impacts. Results derived from IMPLAN software have been approved in applications for Uranium One's Moore Ranch ISR Project (Energy Metals Corporation, US, SUA-1596). This software was originally developed by the United States Department of Agriculture (USDA) in cooperation with the Federal Emergency Management Agency (FEMA) and the United States Department of the Interior (USDI) Bureau of Land Management (BLM) for land and resource management

planning and has been in use since 1979. In 1993, Minnesota IMPLAN Group, Inc was formed to privatize the data and software.

9.2 Alternatives and Assumptions

BCA is a widely used analytical tool to help decision makers determine whether the cost of a project today will result in sufficient benefits to justify expenditure on a capital intensive project. To provide value and to assist in the decision process, the BCA needs to be clear about the alternatives being considered and the underlying assumptions including quantities of goods, labor costs, market conditions and discount rates used to compute net present value. The following discussion briefly identifies alternatives and key assumptions used throughout the analysis.

9.2.1 Development Alternatives

This BCA evaluates the benefits and costs of building the Proposed Project and all the costs and benefits resulting from its ongoing operation in Campbell County, Wyoming. The BCA tradeoff under consideration involves comparing a future assuming the Proposed Project to a future that assumes the No Action alternative.

9.2.1.1 No Action Alternative

Under the No Action alternative, there would be no change in the current land cover or land and water uses at the site as described in Section 2.1.2 of this ER. No uranium would be recovered from the subsurface ore body. As a result, there would be no change in the existing underlying socioeconomic and demographic trends.

9.2.1.2 Proposed Action

The Proposed Action involves the construction and operation of a uranium ISR facility. ISR involves leaving the ore in the ground and using liquids which are pumped through it to recover the minerals out of the ore. A more detailed discussion of the Proposed Action is described in Section 1 and Section 8 of this TR. Consequently, the Proposed Action involves limited surface disturbance at the Proposed Project.

9.2.2 Key Assumptions and Limitations

Key assumptions about the costs and benefits associated with the Proposed Project involve: (1) The Operating Life of the project; (2) the Discount Rate used; (3) the

potential Scope of the Monetary Impacts; and (4) Potential Non-monetary Impacts. Each of these is described in more detail below.

9.2.2.1 Operating Life of Proposed Project

The Proposed Project will be a single unit of analysis including the production units, CPP, and outlying related structures. For this analysis, the total effective life of the Proposed Project is assumed to be approximately 16 years. Within this time frame, there are four distinct phases each with a distinct suite of costs and benefits:

- One year of initial site development and facility construction;
- Approximately 11 years of production unit and CPP operation
- Approximately 2 years of continued CPP operation after decommissioning and decontamination of the production units, including restoration of groundwater; and
- One year of decommissioning the CPP plant and disposal wells and one additional year of continued regulatory review.

9.2.2.2 Discount Rate

All monetary values were input as 2012 dollars, therefore no discount rate is applied to future benefits and costs, which are already expressed as 2012 dollars.

9.2.2.3 Scope of Potential Impacts

A critical step in any BCA is establishing a viable scope of potential impacts and thus establishing who or what will be affected by the Proposed Project. For purposes of quantifying direct, indirect, and induced economic effects, the state of Wyoming is the geographic area of analysis (see discussion of IMPLAN Input Data below). Other socio-economic analyses (e.g., effects on housing, schools, etc.) focus on the communities within the 50 mile (80 km) study area.

9.2.2.4 Potential Non-Monetary Impacts and Benefit-Cost Ratio

Conventional BCA uses monetary values to compare goods and services derived from a project or program. The values of goods and services represent their relative importance so that if the total value of the benefits is greater than the total value of the costs, the Proposed Project is desirable. The standard result is a quantified benefit-cost ratio (BCR), equal to a project's total net benefits divided by its total cost. BCR's above one have positive net economic impacts. While many inputs in the Proposed Project BCR are

goods and services (skilled labor, construction material) that are regularly traded in markets at well known and predictable prices, others (changes to land or water, aesthetic impacts) are not directly traded and are more difficult to value. Where reliable monetary values are not available a qualitative approach based on the best available information is required. Because there is a mix of quantifiable and qualitative variables in the BCA for the Proposed Project, no numeric Benefit-Cost ratio is calculated.

9.3 Potential Economic Benefits of Project Construction and Operation

This section considers the potential economic impacts resulting from construction and operation-related activities over the life of the Proposed Project. Economic benefits are those that have the potential to affect the local economy, including the number of jobs created and state and local tax revenues generated from project related business activities.

These analyses use IMPLAN to calculate the potential economic impacts. IMPLAN allows the user to build an input-output model tailored to model the potential impacts of a Proposed Project on a specific community or region. The system is flexible and contains a database of over 500 industrial sectors gathered from counties throughout the United States. By identifying the location and industrial sector of the project (i.e., construction and production), the analyst can therefore estimate the total potential economic impact of a given project. The model requires labor and capital expenditures data as inputs in order to evaluate the potential economic impacts of the project. The output is the potential direct, indirect, and induced employment impacts and generated tax revenue.

9.3.1 IMPLAN Input Data

Wyoming was selected as the study area for IMPLAN impact analysis for a number of reasons. Although the project is located in Campbell County, using only the county as the economic study area would result in an understatement of the overall economic impact of the project. This is because Campbell County, with a population (per 2010 census) of 46,133 is too small for economic impact analysis purposes. The project operator will necessarily look outside of the county for some of the goods and services needed to construct and operate the facility. Using the state of Wyoming (with estimated 2010 population of 563,626 and with several larger retail/business communities such as Casper, Gillette, and Cheyenne) provides a greater likelihood that more of the goods and services needed for the Proposed Project will come from the economic study area. The economic study area and detailed methodology for the Implan analysis were reviewed by MIG executive Doug Olson.

Economic effects of operations were calculated using IMPLAN sector 24 (gold, silver or other metal ore mining) as there is no separate IMPLAN sector for uranium facilities. The

NAICS code for uranium-related industries (2212291) is included in IMPLAN sector 24. The IMPLAN data for Wyoming for Sector 24 was modified for the Ludeman Uranium Project analysis to better correspond to the project parameters as follows. The Wyoming state data included proprietary income as part of "Per worker Earnings" for Sector 24. Since proprietor income inflated per worker earnings in Sector 24 compared to payroll cost projections prepared by AUC, it was zeroed from the equation. This adjustment then brought the per worker earnings into better alignment with the Proposed Project payroll cost estimates. Once this adjustment was made, the number of employees directly employed for operations by AUC was used as the input to the IMPLAN model to predict the economic outputs of operating production units and the CPP (Table 9-1).

Economic effects of construction and decommissioning were calculated using two IMPLAN sectors – sector 36 (construct other non-residential structures) and sector 205 (construction machinery manufacturing). These sectors were arrived at by examining U.S. Bureau of Economic Analysis Capital Flow data. The Capital Flow data indicate that approximately 44 percent of metal mining commodity expenditures are spent on construction activities; 30 percent on equipment and machinery, and 15 percent on transportation equipment (e.g., vehicles). The remaining 11 percent is spread among a number of categories in small amounts. Projected construction and decommissioning costs are presented in Table 9-2. IMPLAN's Regional Purchase Coefficient (RPC) for sector 36 in Wyoming is 100 percent. RPC represents the proportion of goods and services purchased from local producers. IMPLAN's RPC for sector 205 (construction machinery manufacturing) was 2.6 percent, meaning that only 2.6 percent of the total amount would be spent on construction machinery and equipment produced in Wyoming and the other 97.3 percent of expenditures would go to firms outside of Wyoming. There was no comparable category for transportation equipment in the IMPLAN sectors for Wyoming—vehicle manufacturing occurs in other states.

To arrive at estimated impacts of construction and decommissioning, AUC's direct payroll and non-payroll costs were input into the IMPLAN model as follows. Forty-four (44) percent of the total payroll and non-payroll costs of construction was applied to sector 36 (construction) with an RPC of 100 percent. Thirty (30) percent of the total was applied to sector 205 (construction machinery) using the RPC of 2.6 percent. Much of the balance of 26 percent is assumed to be "leakage" from the state of Wyoming—costs going to goods produced elsewhere, such as purchase of vehicles. Still, the overall economic impacts of construction for this project are likely to be a conservative estimate, since some of the other goods and services that will be needed may be produced in Wyoming.

9.3.2 Potential Employment Benefits

Using the above inputs and assumption, Table 9-3 shows the potential direct, indirect, and induced effects on state-wide employment. Employment is expressed as numbers of jobs. IMPLAN, like the Regional Economic Information System (REIS) of the US Bureau of Economic Analysis (BEA), measures an industry's employment as the average annual full and part-time number of employees. These numbers are estimates only. Actual numbers may vary based on a number of factors.

The direct employment effects refer to the employment directly generated by the project. Direct jobs include payroll positions with AUC as well as persons employed through contract on construction and decommissioning.

Indirect employment includes jobs resulting from increased demand for products or goods related to the direct effects of construction, operations, and decommissioning. Indirect employment would include jobs such as those needed to support the direct activities on site such as vehicle repair.

Induced employment is the result of expenditures caused by new household income generated by the direct and indirect effects. Food and beverage establishments, medical facilities, and retail businesses might likely require more employees to serve new residents or households with expanded incomes resulting from the increases in direct and indirect employment.

Total potential direct, indirect, and induced employment fluctuates from year to year because each year there is a different combination of construction, operations, and decommission activities.

Total direct, indirect and induced jobs created by the Proposed Project are estimated at 300 jobs during the first year of intensive construction. By the second year, the total jobs created by the project subside to approximately 155 as the CPP construction and deep disposal wells are completed. Total jobs hover between 143 and 145 for approximately the next six years. During the ninth year of the project, construction on the last of the production units is projected to be completed and total jobs declines to approximately 122, then is at 97 for four years. In year 14 there are 95 total jobs. I year 15, more jobs come on line as the CPP and deep disposal wells are decommissioned, resulting in a total of 121 jobs that year. In the 16th. final year, there are 41 total jobs.

9.3.3 Potential State and Local Tax Revenue Benefits

In addition to aggregate employment effects, IMPLAN provides an estimate of expected state and local tax revenue impacts over the life of the Proposed Project associated with

ISR activities. In order to remain consistent with the scope of impact, Federal taxes are not included in this analysis.

Potential state and local tax implications associated with the Proposed Project are presented in Table 9-4 While IMPLAN includes employee and employer social insurance taxes as well as personal tax items like income tax, property tax and motor vehicle license tax, these tax revenues are not reported here because they are paid by county workers and their families and thus represent a transfer of wealth rather than a net economic gain. The state and local tax estimates in Table 9-4 are instead calculated only on non-payroll business taxes. These revenues stem directly from the construction and operation of the Proposed Project, are paid by the operator of the Proposed Project, and therefore can be counted as net economic gains when compared to the No Action alternative.

The IMPLAN tax results in Table 9-4 were adjusted as follows ---the estimated amount of severance taxes was subtracted from the total.IMPLAN results indicated a total severance tax of approximately $9.6 million over the 16-year projected life of the Proposed Project, but calculations run by Wyoming Department of Revenue's Mineral Tax Division indicate total production taxes at $41.5 million. (WDOR) The state would receive $16.4 million in severance taxes and Campbell County would receive $25.1 million in gross products taxes over the couse of the 16-year Proposed Project. These estimates were based on 10.99 million pounds of product sold at the current long-term market rate of $65 per pound.

As Table 9-4 shows, the results from the IMPLAN analysis show that the construction and operation of the Proposed Project is expected to generate annual state and local revenues of more than $1.5 million per year until the last year of the project. Total cumulative local and state tax revenues over the 16-year life of the project are estimated at $26.75 million (expressed as 2012 dollar equivalents). These taxes include property and sales taxes.

In sum, the results show the Proposed Project will result in $41.5 million in severance and production taxes and an additional $26.75 million in other state and local taxes, for a total of $68.2 million over the 16-year projected life of the project. It is noted that this figure represents a lower bound estimate as it excludes potential reserve resources and does not include potential benefits derived from taxes on royalties or lease payments to local landowners stemming from the operation of the Proposed Project.

9.4 Potential External Costs of Project Construction and Operation

In this section of the analysis, potential external costs of the Proposed Project are identified and compared to the No Action alternative. Both short-term and long-term

external costs that may affect the interest of people other than the owners and operators of the Proposed Project are also identified and described.

9.4.1 Short Term External Costs

9.4.1.1 Housing Shortages

At its peak in the first year of the estimated life-span of the project, the Proposed Project is estimated to produce approximately 300 total jobs in Wyoming. This includes jobs created directly or indirectly by the project or induced by related household expenditures. Many of the jobs will be ongoing over the life of the project (such as the number of persons directly employed by the operator or its contractors for ongoing construction). Because the total number of jobs is estimated to fluctuate from year to year, some jobs will be short term rather than ongoing.

Unemployment rates are low in the seven counties surrounding the Proposed Project. In January 2012, unemployment rates ranged from 4.7 percent to 5.8 percent in all but Weston (6.5 percent) and Johnson (8.0 percent) Counties, compared to 8.8 percent for the entire United States (WDOW). It is anticipated that this area will continue to have relatively low unemployment rates. Consequently, it is assumed that the supply of available workers is limited locally and that many of the employees needed to fill the projected new local jobs will come from outside the seven county area.

At the peak of all direct, indirect, and induced employment, which falls in the first year of the project, a total additional estimated 300 jobs would be created. Although the IMPLAN analysis study area was for the entire state of Wyoming, for purposes of analyzing the range of impacts, all 300 jobs were projected to result in new demand for housing in communities within an 50 mile (80 km) radius of the Proposed Project. This overestimates the likely potential for impacts to this area because some of the indirect and induced jobs will be located outside of the 50 mile (80 km) study area and some of the jobs will be filled with current local residents who need no additional housing.

Assuming each job created a separate demand for housing, it would require 300 available housing units. In 2010, there were 661 vacant rental units and 209 houses for sale in the seven communities within 50 mile (80 km) of the Proposed Project area – Gillette, Wright, Sleepy Hollow, Antelope Valley, Kaycee, Edgerton and Midwest, with most of the available units located in Gillette. In addition, the Casper area, which is approximately 1.5 hours from the project site, has considerable housing stock. In 2010, Natrona County had 921 vacant rental units and 370 houses for sale. In the event that workers from out-of-state are hired for the short-term construction phase of the proposed

project, the present available stock of motel/hotel rooms and RV sites will accommodate the temporary workers.

There is sufficient available housing in the 50 mile (80 km) study area to accommodate new residents taking jobs directly or indirectly related to the Proposed Project.

9.4.1.2 Impacts on Schools and Other Public Services

The estimated total of 300 new direct, indirect, and induced jobs of the peak employment year for the Proposed Project would result in a total population increase of 726 persons, based on average household size in Wyoming of 2.42 in 2010 (U.S. Census) and assuming that all of the jobs are filled with persons not already living in Wyoming.

As identified above in the discussion of housing, it is unlikely that all 300 new jobs will be based in the 50 mile (80 km) study area, but for analysis purposes it is assumed to be so to identify the highest potential impact. The addition of 726 persons would be an increase of approximately 1.5 percent to the total 2010 population of 45,807 living in the 50 mile (80 km) study area.

According to the 2010 U.S. Census, children between the ages of five and 19 comprised between 16.7 percent to 22.0 percent of the total county population in the seven counties included in the study area. The highest ratio was in Campbell County (22.0 percent). Using 22.0 percent as the ratio for school age children, there would be approximately 160 school age children anticipated from the projected increase in total direct, indirect, and induced employment.

All of the schools within the 50 mile (80 km) study area have some capacity for additional students, with the exception of the Kaycee Schools and the elementary school in Wright. Gillette schools are experiencing significant growth in student numbers, but are working to accommodate new students.

A total increase of approximately 1.5 percent to the total population of mile (80 km) study area is not likely to create a significant impact on other public services such as fire, police, water, and utilities. Actual population increases as a result of the Proposed Project are anticipated to be less than described here because not all jobs will result in new residents within the study area.

9.4.1.3 Impacts on Noise and Congestion

Currently there is one occupied housing unit located within the Proposed Project area, and it will be purchased by AUC prior to commencing construction activities. Open

rangeland is the primary land use within and in the surrounding five-mile land use area. Other land uses include oil and gas production, CBM production, as well as livestock grazing. As a result of the remote location of the Proposed Project and the low population density of the surrounding area, impact to noise or congestion within the Proposed Project area or in the surrounding five mile land use area will be miminal. Additionally, given the maximum increase in population due to migrant workers is insignificant, noise and congestion impacts are not anticipated in Campbell or other neighboring counties.

9.4.2 Long Term External Costs

9.4.2.1 Impairment of Recreational and Aesthetic Values

While opportunities for developed and dispersed recreation exist throughout the seven-county region surrounding the Proposed Project, there is currently very limited recreational use within the Proposed Project area or in the surrounding review area. Most developed recreation opportunities offered by the private sector are community facilities in townships or urban areas for tourist services and facilities.

The physical remoteness of the Proposed Project and its lack of proximity to any well recognized federal or state sites of recreational interest indicated that there are no significant long-term impairments to recreational values from developing the Proposed Project.

9.4.2.2 Land Disturbance

The Proposed Project area has been used historically for grazing, oil and gas development, and CBM development; therefore, it is unlikely that any previously unaffected land area currently exists within the Proposed Project area. A significant, pre-existing human footprint on the landscape is evident in existing grazing activities and facilities (stock tanks, fences), oil production facilities, natural gas production facilities, and infrastructures that support these activities. Oil and gas field infrastructure within the Proposed Project area and the surrounding five mile land use review area includes access roads, overhead electric distribution lines, and cleared rights-of-way for underground utilities, which are generally found along access roads. There would be negligible changes in land cover or land use from existing conditions outside of the five mile land use review area.

As the Proposed Project will use in-situ recovery instead of conventional surface mining techniques, there will be limited land surface disturbance associated with the wellfield development and operation of the site. Land surface disturbance associated with wellfield development will also be short term as interim stabilization with native vegetation species

is implemented as construction activities are complete and maintained through the life of the wellfield. No tailings and minimal byproduct material will be generated. The CPP and private access roads will be confined to clearly delineated areas within the Proposed Project area. While there will be some land use changes from the existing condition within the Proposed Project area, potential impacts will be minimal.

9.4.2.3 Habitat Disturbance

Currently, there is no Federal or State designated critical wildlife habitat located within the Proposed Project area. As the Proposed Project area has been historically used extensively for oil and gas production, CBM production, and livestock grazing there are no anticipated long-term losses to wildlife or wildlife habitat relative to the existing conditions resulting from the construction and operation of the Proposed Project.

9.4.3 Groundwater Impacts

It is unlikely that any future irrigation development will occur within the Proposed Project area due to limited water supplies, topography, and climate. Any irrigation within the five-mile land use review area is anticipated to be consistent with historic uses. Based on population projections, future water use within the five-mile land use review area will likely be a continuation of current practices; therefore, it is anticipated that there will be no significant changes from the existing conditions for public water supply in the area and the operation of the Proposed Project has a very limited potential to induce adverse effects.

Following standard ISR practice, any impacted water drawn from the groundwater on site will either be treated before re-injection or disposed through deep well injection. Upon decommissioning, wells will be sealed and remaining groundwater will be restored as discussed in Section 6.4 of this document.

Given the historically limited irrigation, the lack of domestic groundwater use, and the groundwater restoration program associated with the Proposed Project, there will be no permanent commitment of water resources required and any potential long-term changes from the No Action groundwater conditions will be limited to those identified and addressed in the groundwater restoration program.

9.4.4 Radiological Impacts

As the Proposed Project will be using ISR techniques, most of the identified radioactivity in the orebody will remain permanently underground. Following standard ISR procedures, routine operational monitoring of air, dust and surface contamination will be

undertaken by AUC as discussed in Section 5 of the TR. Prior to the CPP decommissioning, a preliminary radiological survey will be conducted to identify any potential radiological hazards. The survey also will support the development of procedures for dealing with such hazards prior to commencement of decommissioning activities.

Decommissioning of Proposed Project process facilities will be scheduled only after agency approval. This will be accomplished in accordance with an approved decommissioning plan and the most current applicable USNRC rules and regulations, permit and license stipulations and amendments in effect at the time of the decommissioning activity.

All process or potentially contaminated equipment and materials at the process facility including tanks, filters, pumps, piping, etc., will be designated for one of the following removal alternatives:

- Removal to a new location within the Proposed Project area for further use or storage;
- Removal to another licensed facility for either use or permanent disposal; or
- Decontamination to meet unrestricted use criteria for release, sale or other non-restricted use by the landowners and others.

It is likely that process buildings will be dismantled and moved to another location or to a permanent licensed disposal facility. Cement foundation pads and footings will be broken up and trucked to a local disposal site or to a licensed facility if contaminated. The landowners may request that a building or other structures be left on site for future use. In that case, the building will be decontaminated to meet unrestricted use criteria. At the present time, burial of non-contaminated byproduct material on site is not anticipated.

Under the proposed operating and decommissioning conditions, the potential long-term external radiological impacts at the Proposed Project are anticipated to be negligible compared to the existing background No Action conditions.

9.5 Benefit-Cost Summary

A primary economic benefit of the Proposed Project is the creation of approximately 300 new job opportunities within the State of Wyoming, including the direct, indirect and induced employment effects over the construction and operating life of the Proposed Project (Table 9-5). Additionally, the Proposed Project may generate up to $68.2 million in total state and local business tax revenues over the life of the Proposed Project, which is a significant economic gain compared to the No Action alternative.

Table 9-5 further shows that the short-terms effects on housing, schools and public facilities and the increased potential for noise and congestion in the county involve little or no change compared to the current conditions. Based on the historic land uses, physical remoteness and proposed reclamation practices, no potential quantifiable long-term impairments appear to significantly offset the benefits of the Proposed Project.

The Proposed Project is likely to place negligible short-term or long-term cost burdens on the county, while providing increased revenue and employment opportunities; therefore, the development and operation of the Proposed Project will provide a net economic benefit to Campbell County and the State of Wyoming when compared to the No Action alternative.

Table 9-1: Total Operations Direct AUC Staff Positions

Year of Operation	AUC Employees
Year 1	38
Year 2	38
Year 3	44
Year 4	44
Year 5	44
Year 6	44
Year 7	44
Year 8	44
Year 9	44
Year 10	43
Year 11	43
Year 12	43
Year 13	43
Year 14	38
Year 15	38
Year 16	19

Table 9-2: IMPLAN Input Data for Proposed Project Construction and Decommission

	Total Costs of Construction Decommission	Non-eqmt costs (44% of total)	Eqmt and machinery (30%)
Year 1	$45,532,500	$20,034,300	$13,659,750
Year 2	$15,532,500	$6,834,300	$4,659,750
Year 3	$10,620,000	$4,672,800	$ 3,186,000
Year 4	$10,620,000	$4,672,800	$3,186,000
Year 5	$10,620,000	$4,672,800	$3,186,000
Year 6	$10,886,250	$4,789,950	$3,265,875
Year 7	$ 0,975,000	$4,829,000	$3,292,500
Year 8	$10,975,000	$4,829,000	$3,292,500
Year 9	$6,275,000	$2,761,000	$1,882,500
Year 10	$1,440,000	$633,600	$432,000
Year 11	$1,440,000	$633,600	$432,000
Year 12	$,440,000	$633,600	$432,000
Year 13	$,440,000	$633,600	$432,000
Year 14	$3,166,500	$1,393,260	$949,950
Year 15	$8,608,500	$3,787,740	$2,582,550
Year 16	$235,000	$103,400	$70,500

Table 9-3: Employment Effects of the Proposed Project

	Direct	Indirect	Induced	Total
Year 1 -Construction/Decommission	146.1	36.1	38.6	220.9
Year 1 - Operations	38	21.2	20.2	79.3
Subtotal	**184.1**	**57.3**	**58.8**	**300.2**
Year 2 - Construction/Decommission	49.8	12.3	13.2	75.3
Year 2 - Operations	38	21.2	20.2	79.3
Subtotal	**87.8**	**33.5**	**33.4**	**154.7**
Year 3 - Construction/Decommission	34.1	8.4	9	51.5
Year 3 - Operations	44	24.5	23.4	91.9
Subtotal	**78.1**	**32.9**	**32.4**	**143.4**
Year 4- Construction/Decommission	34.1	8.4	9	51.5
Year 4 - Operations	44	24.5	23.4	91.9
Subtotal	**78.1**	**32.9**	**32.4**	**143.4**
Year 5 - Construction/Decommission	34.1	8.4	9	51.5
Year 5 - Operations	44	24.5	23.4	91.9
Subtotal	**78.1**	**32.9**	**32.4**	**143.4**
Year 6 - Construction/Decommission	34.9	8.6	9.2	52.8
Year 6 - Operations	44	24.5	23.4	91.9
Subtotal	**78.9**	**33.1**	**32.6**	**144.6**
Year 7 - Construction/Decommission	35.2	8.7	9.3	**91.9**
Year 7 - Operations	44	24.5	23.4	53.2
Subtotal	**79.2**	**33.2**	**32.7**	**145.1**
Year 8 - Construction/Decommission	35.2	8.7	9.3	53.2
Year 8 - Operations	44	24.5	23.4	91.9
Subtotal	**79.2**	**33.2**	**32.7**	**145.1**
Year 9 - Construction/Decommission	20.1	5	5.3	30.4
Year 9 - Operations	44	24.5	23.4	91.9
Subtotal	**64.1**	**29.5**	**28.7**	**122.3**
Year 10 - Construction/Decommission	4.6	1.1	1.2	7
Year 10 - Operations	43	23.9	22.8	89.8
Subtotal	**47.6**	**25**	**24**	**96.6**
Year 11 - Construction/Decommission	4.6	1.1	1.2	7
Year 11 - Operations	43	23.9	22.8	89.8
Subtotal	**47.6**	**25**	**24**	**96.6**
Year 12 - Construction/Decommission	4.6	1.1	1.2	7
Year 12 - Operations	43	23.9	22.8	89.8
Subtotal	**47.6**	**25**	**24**	**96.6**
Year 13 - Construction/Decommission	4.6	1.1	1.2	7
Year 13 - Operations	43	23.9	22.8	89.8
Subtotal	**47.6**	**25**	**24**	**96.6**
Year 14 - Construction/Decommission	10.2	2.5	2.7	15.4
Year 14 - Operations	38	21.2	20.2	79.3
Subtotal	**48.2**	**23.7**	**22.9**	**94.8**
Year 15 - Construction/Decommission	27.6	6.8	7.3	41.8
Year 15 - Operations	38	21.2	20.2	79.3
Subtotal	**65.6**	**28**	**27.5**	**121.1**
Year 16 - Construction/Decommission	0.8	0.2	0.2	1.1
Year 16 - Operations	19	10.6	10.1	39.7
Subtotal	**19.8**	**10.8**	**10.3**	**40.9**

Table 9-4: State and Local Tax Revenue IMPLAN Projections

INDIRECT TAXES NOT INCLUDING SEVERANCE (In Dollars)					
	Enterprise Tax		Indirect Business Tax		
Year	Construction-Decommissioning	Operations	Construction-Decommissioning	Operations	TOTAL
1	36,621	278,774	365,147	1,205,555	1,886,097
2	12,492	278,774	124,563	1,205,555	1,621,384
3	8,541	322,791	85,167	1,395,905	1,812,404
4	8,541	322,791	85,167	1,395,905	1,812,404
5	8,541	322,791	85,167	1,395,905	1,812,404
6	8,756	322,791	87,302	1,395,905	1,814,754
7	8,827	322,791	88,014	1,395,905	1,815,537
8	8,827	322,791	88,014	1,395,905	1,815,537
9	5,047	322,791	50,323	1,395,905	1,774,066
10	1,158	315,455	11,548	1,364,180	1,692,341
11	1,158	315,455	11,548	1,364,180	1,692,341
12	1,158	315,455	11,548	1,364,180	1,692,341
13	1,158	315,455	11,548	1,364,180	1,692,341
14	2,547	278,774	25,399	1,205,555	1,512,275
15	6,924	278,774	69,035	1,205,555	1,560,288
16	189	139,387	1,884	602,777	744,237
Totals	**120,485**	**4,775,840**	**1,201,374**	**20,653,052**	**26,750,751**

Table 9-5: Summary of Benefits and Costs for the Proposed Project

Benefits	Costs
• Tax revenue $68.2 million • Additional new jobs (peak year) 300 jobs	• Housing impacts -Little or no change • Schools and Public Facilities -Negligible • Noise and Congestion -Negligible • Impairment of recreational and Aesthetic values -Negligible • Land Disturbance -Minor • Groundwater impacts -Controlled through mitigation • Radiological Impacts -Controlled through mitigation

9.6 References

EIA (U.S. Energy Information Administration). 2011. "What is the status of the U.S. nuclear industry?", Website: http://www.eia.gov/energy_in_brief/nuclear_industry.cfm. Accessed December, 2011.

IMPLAN Professional 2.0 Software and IMPLAN data for state of Wyoming.

IMPLAN User Guide, 3rd edition. 2004.

U.S. Census. 2010

WDOR (Wyoming Department of Revenue). Calculations run by Cynthia Rice.

WDOW (Wyoming Department of Workforce Services, Research & Planning. Website accessed March 2012. http://doe.state.wy.us/lmi/news.htm

TABLE OF CONTENTS

10 ENVIRONMENTAL APPROVALS AND CONSULTATIONS..... 1-1

List of Tables

Table 10-1: Summary of Proposed, Pending and Approved Permits for the Proposed Reno Creek Project 10-2

10 ENVIRONMENTAL APPROVALS AND CONSULTATIONS

Various permits and approvals from numerous Federal and State agencies will be required for the proposed Reno Creek Project to operate. Table 10-1 identifies the issuing agencies, a description of the type of permit(s), license or approvals needed, and the current status of securing these approvals.

Table 10-1: Summary of Proposed, Pending and Approved Permits for the Proposed Reno Creek Project

Issuing Agency	Description	Status
State		
Wyoming Department of Environmental Quality 122 West 25th St Herschler Building Cheyenne, Wyoming 82001	Underground Injection Control Class III Permit (WDEQ Title 35-11)	Class III UIC Permit application under review; expected approval by WDEQ in third quarter 2013
	Aquifer Reclassfication (WDEQ Title 35-11)	Aquifer reclassfication application under preparation; approval by WDEQ in the third quarter 2013
	Underground Injection Control Class I (WDEQ Title 35-11)	Class I UIC Permit application under review; expected approval by WDEQ in fourth quarter 2012
	Industrial Stormwater NPDES Permit (WDEQ Title 35-11)	An Industrial Stormwater NPDES will be required for the CPP Area. Expected submittal second quarter 2013
	Construction Stormwater NPDES Permit (WDEQ Title 35-11)	Construction Stormwater NPDES authorizations are applied for and issued annually under a general permit based on projected construction activities. The Notice of Intent will be filed at least 30 days before construction activities begin in accordance with WDEQ requirements.
	Mineral Exploration Permit (WDEQ Title 35-11)	Drilling Notification (DN) #401 Approved: Permit Amendment 2, TFN 5 6/175 February 9, 2011
	Underground Injection Control Class V (WDEQ Title 35-11)	The Class V UIC permit will be applied for following installation of an approved site septic system during facility construction
	Air Quality Permit	Application will be submitted third quarter 2013
Federal		
U.S. Nuclear Regulatory Commission Washington, DC 20555	Materials License (10CFR40)	Application submitted herein
U.S. Environmental Protection Agency 1200 Pennsylvania Ave, NW, Washington, DC 20460	Aquifer Reclassfication (40CFR 144, 146)	Aquifer reclassfication application forwarded to EPA following WDEQ action
U.S. Army Corps of Engineers 2232 Dell Range Blvd., Suite 210 Cheyenne, WY 82009-4942	Nation Wide Permit (NWP) # 12 Authorization	All necessary information provided to the USACE, anticipate concurrence in third quarter 2012 that activities associated with the Proposed Reno Creek project are consistent with activities authorized in NWP #12.

GLOSSARY

11e.(2) Byproduct Material: the tailings or byproduct produced by extracting or concentrating uranium or thorium from any ore processed primarily for its source material content. See also Source Material.

Backup Storage Pond: a lined containment pond to temporarily hold waste water as backup capacity to the deep disposal wells (DDW) during maintenance or repair

Bleed: a solution drawn to adjust production or to restore groundwater by pumping more fluids from the production zone than are injected, causing fresh groundwater to flow into the production area.

Brine: water with concentrated dissolved minerals generated from the production and restoration reverse osmosis units.

Buffer Area: area extending a specified distance outside the Proposed Project area for analyzing baseline conditions and potential impacts. The distance from the proposed project area varies by resource. Also refered to as "Review Area."

Central Processing Plant Area: the fenced area that will include the Central Processing Plant (CPP), storage facilities, office/warehouse facilities, backup storage pond, and other piping and equipment. The CPP area is proposed in portions of the SENE of Section 1, Township 42 North, Range 74 West.

Controlled Area: as defined by 10 CFR Part 20 is an area outside of a restricted area but inside the site boundary, access to which can be limited by the licensee for any reason.

Deep Disposal Well: a class I well that injects hazardous and non-hazardous wastes into deep, isolated rock formations that are below the lowermost USDW.

Effluent: a waste liquid, solid, or gas, in its natural state or partially or completely treated, that discharges into the environment.

Eluant: a substance used as a solvent in separating materials in elution

Elution: the process of extracting (or eluting) one material from another by washing with a solvent (eluant) to remove adsorbed material (such as uranium) from an adsorbent such as an ion exchange resin.

Ephemeral stream: a drainage feature that only carries surface runoff in direct response to precipitation. An ephemeral stream may or may not have a well-defined channel and the stream bed is always above the water table. An ephemeral stream lacks the biological, hydrological, and physical characteristics commonly associated with perennial or intermittent streams.

Excursion: the unintended spread, either horizontally or vertically, of recovery solutions beyond the production zone. Monitoring wells are installed to analyze for appropriate water quality parameters and detect excursions.

Flare: the undetected spread of recovery solutions between the well field and monitor wells of the production zone. Flare is also a proportionality factor that estimates the amount of aquifer water outside of the pore volume that has been affected by lixiviant flow during the recovery phase. The flare is usually expressed as a horizontal and vertical component to account for differences between the horizontal and vertical hydraulic conductivity of an aquifer material.

Feeder Pipelines: injection and recovery feeder pipelines will convey injection and recovery solutions between the main trunk lines which deliver solutions to and from the CPP and the header houses.

Groundwater: water beneath the surface in the saturated zone that is under atmospheric or artesian pressure.

Header House: will transfer injection and recovery solutions to and from individual wells in a wellfield. Each header house will have an injection and recovery manifold which are connected to the respective feeder pipelines.

Injection Zone: a geological formation, group of formations, or part of a formation that receives fluids through a well.

In Situ Recovery (ISR): the in-place recovery of a mineral resource without removing overburden or ore. This is typically accomplished by installing a well and recovering the resource directly from the natural deposit by exposing it to the injection and recovery of a fluid that causes the leaching, dissolution, or recovery of the mineral.

ISR GEIS: Generic Environmental Impact Statement for *In-Situ* Leach Uranium Milling Facilities, NUREG-1910.

Injection Well: a well or conduit through which lixiviant is introduced into the ore body.

Ion Exchange: a chemical process used to recover uranium from solution by the exchange of dissolved uranium ions between a lixiviant (leach solution) and a solid, either a mineral surface or, more commonly, a synthetic polymer resin.

Lixiviant: a leachate solution composed of native groundwater and chemicals (such as sodium carbonate/bicarbonate, ammonia, or sulfuric acid) added by the ISR facility operator. In the ISR process, the lixiviant is pumped underground for the purpose of mobilizing (dissolving) uranium from a uranium ore body.

Monitor Well: a well constructed or utilized to measure static water levels and/or to obtain liquid, solid, or gaseous analytical samples or other physical data that would be used for controlling the operation or to indicate potential circumstances that could affect the environment.

OM Wells: monitor wells completed in the Overlying Aquifer.

Overlying Aquifer: overlying aquifer relative to the production zone.

Overlying Aquitard (OA): confining unit providing isolation between the production zone and overlying aquifer

Permeate: nearly pure water generated from the production and restoration reverse osmosis units.

Pore Volume: a term used to define an indirect measurement of a unit volume of aquifer water affected by ISR recovery.

Pregnant Solution: a solution containing a dissolved, extractable mineral that was leached from the ore; uranium leach solution pumped up from the underground ore zone through a production hole. Also called "pregnant lixiviant."

Primary Access Road: an access road to provide access to the central plant area from the Clarkelen Road. The primary access road will include significant cut and fill and gravel surfacing and will be constructed for long-term use.

Proposed Action: the Proposed Action involves construction, operation, groundwater restoration, and decommissioning of an ISR uranium recovery facility in the Proposed Project Area.

Proposed Project Area: the area proposed for construction, operation, groundwater restoration, and decommissioning of an ISR uranium recovery facility.

Production Unit: an area made up of multiple well fields where each well field has its own header house.

Production Zone Aquifer (PZA): the uranium-bearing portion of a geological formation or part of a formation that is the target of ISR uranium recovery by underground injection and production of lixiviant.

PZM Well: monitor well completed in the Production Zone Aquifer.

Pumpkin Butte Uranium District: uranium ore-bearing area in the Powder River Basin (PRB) located in southwest Campbell and southeast Johnson counties.

Reclamation: the process of restoring the surface environment to acceptable pre-existing conditions. Reclamation includes activities such as surface contouring, equipment removal, well plugging, and revegetation.

Recovery Well: a well or a drill hole in an in situ leach operation through which pregnant (uranium-bearing) solutions are extracted from an underground stratum or uranium deposit.

Restoration: returning each constituent in the affected groundwater to its NRC-approved restoration target value or to an alternate standard approved by NRC.

Restricted Area: an area, access to which is limited by the licensee for the purpose of protecting individuals against undue risks from exposure to radiation and 11e.(2) byproduct material. Restricted area does not include areas used as residential quarters, but separate rooms in a residential building may be set apart as a restricted area.

Reverse Osmosis (RO): the act of reversing a diffusion through a semipermeable membrane, typically separating a solvent and a solution, that tends to equalize their concentrations. In ISR facilities, this process is used to treat wastewater to remove dissolved constituents and reduce total dissolved solids.

Review Area: area extending a specified distance outside the proposed project area for analyzing baseline conditions and potential impacts. The distance from the proposed project area varies by resource. Also refered to as “buffer area.”

Roll Front: a localized uranium deposit in the form of a roll or interface that separates an oxidized interior from a reduced exterior. The reduced side of this interface is significantly enriched in uranium.

Satellite Facility: a remotely located facility for initial processing of uranium bearing solutions.

Shallow Water Table Unit (SM unit): a perched shallow water table unit found in some locations of the Proposed Project area

TENORM: as defined by the EPA, is produced when activities such as uranium mining, or sewage sludge treatment, concentrate or expose radioactive materials that occur naturally in ores, soils, water, or other natural materials.

Tertiary Access Road: a road used within the Proposed Project area for access to monitor wells, injection wells, and recovery wells. Tertiary access roads are used for limited travel and consist of designated two-track trails where the land surface is not modified to accommodate the road. They are used until they are no longer needed to access the desired location within the project area.

Trunkline: a buried pipeline conveying lixiviant from the central processing plant to feeder lines or recovery solution from a feeder line to the central processing plant.

Underground Source of Drinking Water (USDW): an aquifer or portion of an aquifer that supplies any public water system or that contains a sufficient quantity of groundwater to supply a public water system, and currently supplies drinking water for human consumption, or that contains fewer than 10,000 mg/I total dissolved solids and is not an exempted aquifer.

Underlying Aquitard (UA): confining unit underlying the Production Zone Aquifer

UM Well: montior well completed in the Underlying Unit.

Underlying Unit: discontinuous underlying sand unit relative to the production zone. Based on geologic and hydrologic data, this unit does not meet the requirements of an aquifer in the Proposed Project area.

Unrestricted Areas: means an area, access to which is neither limited nor controlled by the licensee.

Wellfield: the area of an ISR operation that encompasses the array of injection, recovery and monitoring wells and interconnected piping employed in the ISR recovery process.