EPRI/NRC-RES FIRE PRA METHODOLOGY

Circuit Analysis Basics

Dan Funk – Kleinsorg Group
Gabriel Taylor – U.S. NRC
Office of Nuclear Regulatory Research

Joint RES/EPRI Fire PRA Training Workshop
Bethesda, MD, July and September 2012

A Collaboration of U.S. NRC Office of Nuclear Regulatory Research (RES) & Electric Power Research Institute (EPRI)

CIRCUIT ANALYSIS BASICS
Introduction

- Who Should Attend?
  - Nuclear plant personnel with rudimentary electrical and plant operating knowledge, but very limited experience with electrical control circuits, power distribution systems, and instrument circuits
  - Nuclear plant personnel with no previous exposure to Appendix R, NFPA 805, or Fire PRA circuit analysis concepts and methods

- Who's Here?
  - Name, Organization, Experience
  - What do you want from this "Basics" course?

CIRCUIT ANALYSIS BASICS
Objectives

- This Course is Intended to:
  - For less experienced personnel, provide a 1-day introduction to electrical fundamentals from a perspective of fire-induced circuit failure analysis
  - Provide fundamental information necessary to grasp the concepts and methods of fire PRA circuit analysis that are covered by the main Module 2 course
  - Present overviews of typical nuclear plant electrical power, control, and instrumentation circuits
  - Introduce fire-induced cable failure modes and explain their impact on circuit operation
  - Describe the evolution of circuit analysis for nuclear power plant fire protection

CIRCUIT ANALYSIS BASICS
Topics

- Circuit Design Basics
- Plant Electric Distribution System Design
- Plant Electrical Equipment
- Fire-Induced Cable Failures
- Evolution of Fire Protection Circuit Analysis

CIRCUIT ANALYSIS BASICS
Circuit Design Basics

- Typical Circuit Devices & Symbols
- Types of Drawings and How to Read Them
- General Conventions
- Grounded vs. Ungrounded Circuits
- ANSI/IEEE Standard Device Numbers

CIRCUIT ANALYSIS BASICS
Typical Circuit Devices & Symbols

- Circuit Breakers & Fuses
- Motor Starters & Contactors
- Relays & Contacts
- Terminal Blocks
- Control Power Transformers
- Actuating Coils
- Indicating Lamps & Alarms
- Switches
  - Control/Hand (maintained, momentary, spring-return to normal)
  - Limit & Torque
  - Sensors
  - Transfer & Isolation
  - Position

CIRCUIT ANALYSIS BASICS
Typical Circuit Devices & Symbols, cont…

Refer to

Symbol Library

Handout

CIRCUIT ANALYSIS BASICS
Types of Drawings and How to Read Them

- Single-Line Drawings
- Three-Line Drawings
- Elementary or Schematic Diagrams
- Block Diagrams
- Cable Raceway Schedules
- Wiring or Connection Drawings
- Instrument Loop Diagrams
- Vendor Shop Drawings
- Equipment Arrangement or Location Drawings
- Tray & Conduit Layout Drawings
- Underground & Duct-Bank Layout Drawings
- Specialty Drawings (Electrical Penetration, Logic, Load Lists, Coordination Diagrams, Short Circuit Calculations)
- Piping & Instrument Diagrams

CIRCUIT ANALYSIS BASICS

Types of Drawings and How to Read Them, cont…

- Review, Study, and Understand Drawings…
- Color markers will be needed & used
- Notations are STRONGLY encouraged

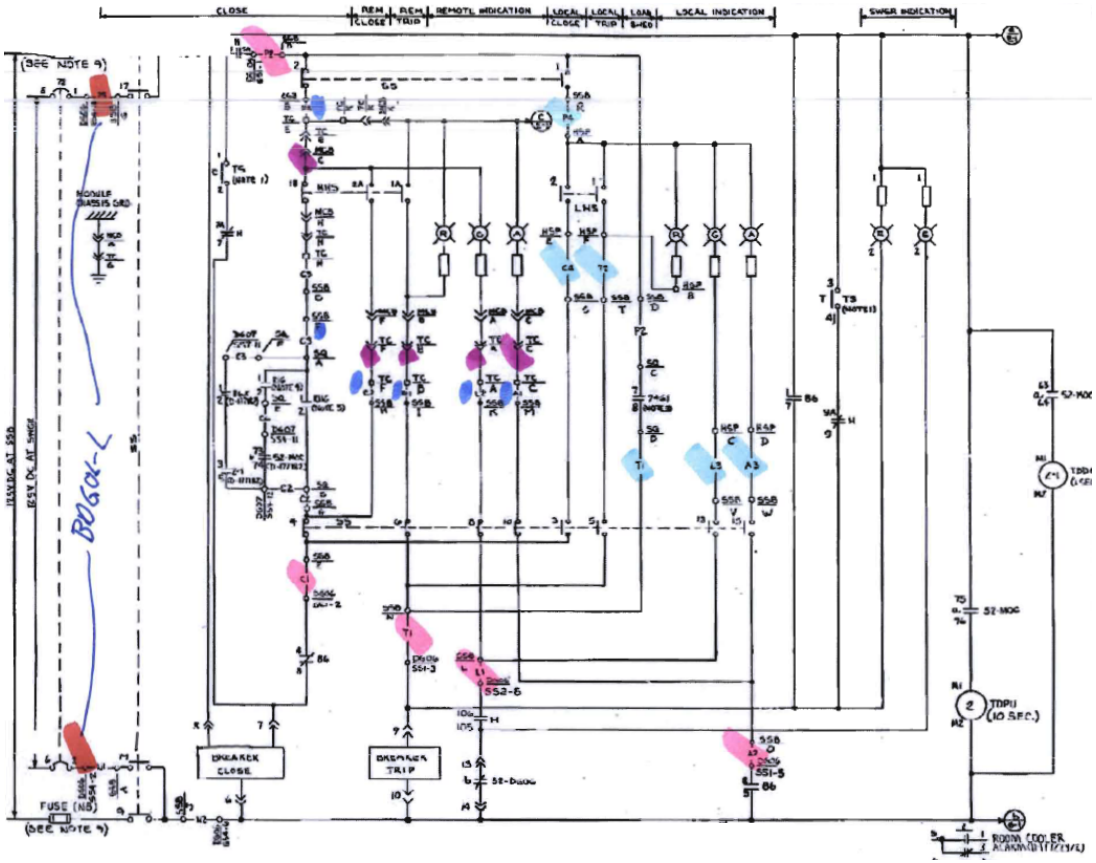

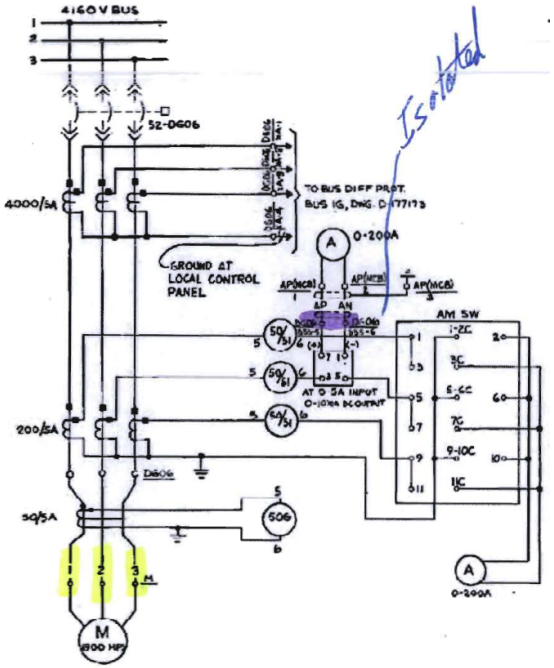

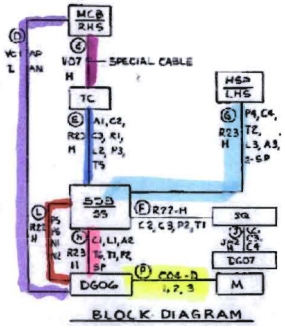

CIRCUIT ANALYSIS BASICS
General Conventions

- Polarity – AC & DC Circuits
- 3-Phase vs. Single-Phase Power
- Delta vs. Wye Connected Circuits
- Normally Open vs. Normally Closed Contacts
- Conductor, Cable, & Raceway IDs
- Electrical vs. Physical Connectivity
- Others ?

CIRCUIT ANALYSIS BASICS
Grounded vs. Ungrounded Circuits

- How can you tell?
- Why one or the other?
- Advantages & disadvantages
- Affect during normal circuit operation?
- Affect during abnormal circuit operation?
- Where will you likely see in practice?
- Types of grounding
  - Solid
  - High Impedance or Resistance
  - Low Impedance or Resistance
- Where is ground point established?
- Why do we care so much about grounding?

Refer to

Standard Device Number

Handout

CIRCUIT ANALYSIS BASICS
Plant Electrical Distribution System Design

- Voltage Levels
- Off-site Power Components
- High-voltage Switchgear and Related Equipment
- Protective Relays
- Load Centers (LC) and Station Service Transformers (SST)
- Motor Control Centers (MCC)
- Battery & DC Distribution System
- Vital AC Distribution System
- Plant Process Instrumentation (NSSS Instruments)
- Reactor Protection and Accident Mitigation Systems

CIRCUIT ANALYSIS BASICS
Plant Electrical Distribution System Design, cont…

- Primary Distribution Breakdown
  - Voltage Levels
  - Off-site Power Components
  - High-voltage Switchgear and Related Equipment
  - Protective Relays
  - Load Centers (LC) and Station Service Transformers (SST)
  - Motor Control Centers (MCC)
  - Battery & DC Distribution System
  - Vital AC Distribution System

CIRCUIT ANALYSIS BASICS

Plant Electrical Distribution System Design, cont…

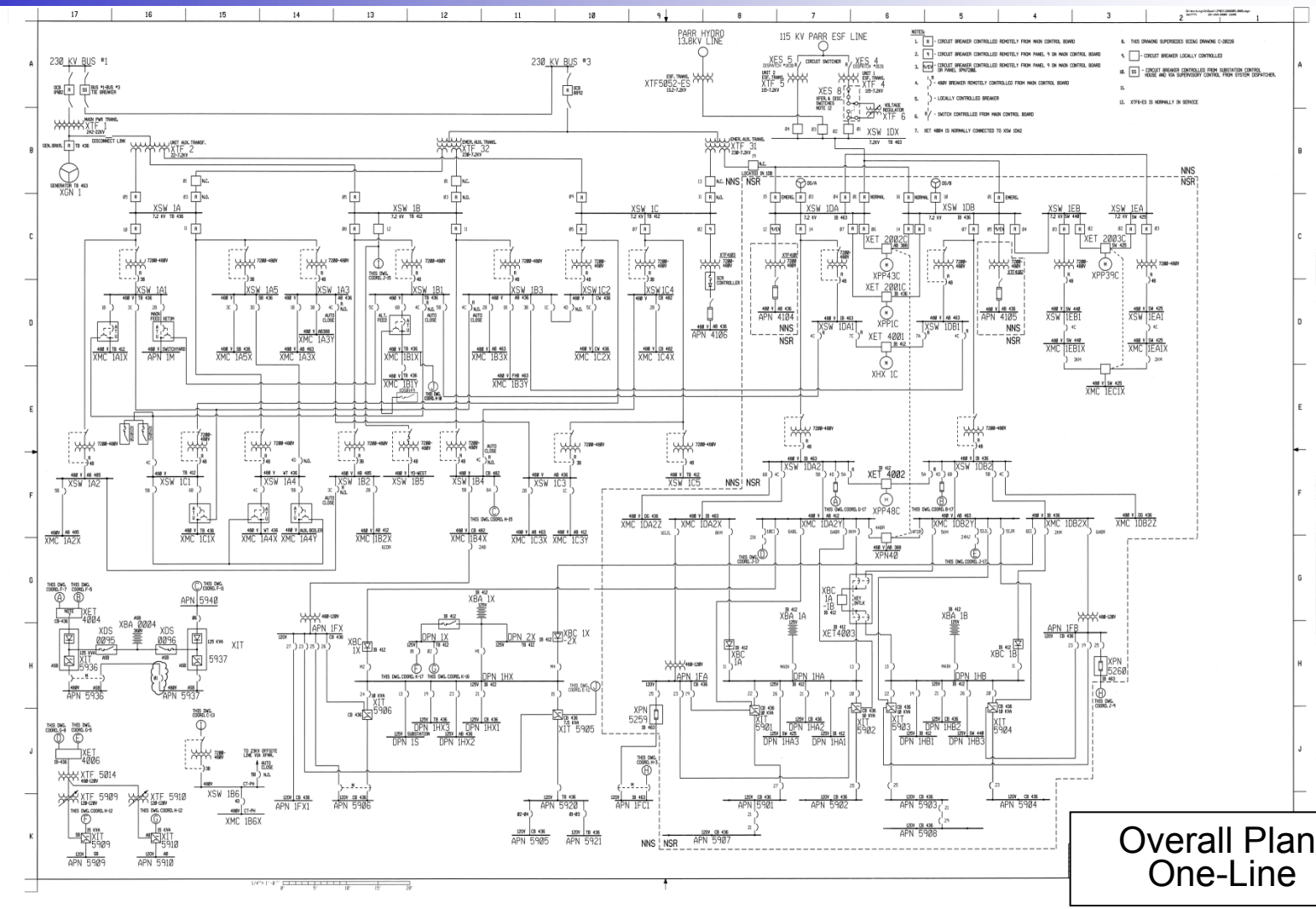

Overall Plant One-Line

CIRCUIT ANALYSIS BASICS
Plant Electrical Equipment

- Cables and Panel Wiring
- Raceway Types
- Transformers – Big to Small
- Air Operated Valves (AOV)
- Solenoid Valves (SOV)
- Motor Operated Valve (MOV)
- High & Medium Voltage Switchgear
- Protective Relays

CIRCUIT ANALYSIS BASICS
Plant Electrical Equipment, cont…

- Circuit Breakers – Big to Small
- AC Motors – Big to Small
- DC Motors
- Instrumentation Circuits
- Electrical Control Panels
- Electrical Power Panels
- Batteries & Chargers
- Inverters

CIRCUIT ANALYSIS BASICS
Cables & Raceways

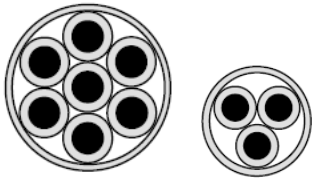

- Cables and Panel Wiring
  - Single-conductor cable
  - Multi-conductor cable
  - Triplex cable
  - Size conventions and ampacity
  - Shielded, unshielded, & armored
  - Materials – Conductor, insulation, & jacket

- Raceway Types
  - Conduit
  - Tray – ladder and solid
  - Wireways
  - Pull boxes
  - Junction boxes
  - Terminal boxes
  - Duct-banks
  - Embedded conduit
  - Air drops
  - Fire wraps

CIRCUIT ANALYSIS BASICS
Transformers

- Power Transformers
  - Main transformers
  - Unit auxiliary transformers (UAT)
  - Startup or reserve auxiliary transformer (SUT, RAT)
  - Station service transformer (SST)
- Control Power Transformers (CPT)
- Instrument Transformers
  - Potential transformer (PT)
  - Current transformer (CT)
  - Zero sequence current transformer
- Specialty Transformers

CIRCUIT ANALYSIS BASICS
Valves

- Air Operated Valves (AOV)
  - Pilot solenoid operated
  - Bi-modal function
  - Modulate function
- Solenoid Valves (SOV)
  - AC & DC operated
- Motor Operated Valve (MOV)
  - Typical design
  - Inverted design

CIRCUIT ANALYSIS BASICS
Switchgear & Relays

- High Voltage Switchgear
  - Switchyard equipment
  - Typically individual components
- Medium Voltage Switchgear
  - 12.47 kV, 7.2 kV, 6.9 kV, & 4.16 kV
  - Typically metal-clad, indoor, draw-out design
  - Separate control power circuit and protective devices
- Protective Relays
  - Overcurrent relays (50, 51, 50N, 51N, 50G)
  - Differential relays (87, 87T, 87B)
  - Undervoltage relays (27)
  - Frequency relays (81)
  - Reverse power relays (32, 67)
  - Lockout relays (86)

CIRCUIT ANALYSIS BASICS
Circuit Breakers

- Medium Voltage Power Circuit Breakers
  - Often called Power Circuit Breakers (PCB) or Vacuum Circuit Breakers (VCB)
  - 1,000 V – 15 kV
  - Separate 125 VDC control power
  - Separate close and trip coils
  - Fails “as-is” on loss of control power
  - No overcurrent protection w/o control power
  - Separate trip devices – protective relays
- Low Voltage Power Circuit Breakers (LVPCB)
  - Below 1,000 V
  - Same basic features as medium voltage power breakers
  - Internal or external trip devices
- Molded Case Circuit Breakers
  - Internal trip devices – thermal and/or magnetic
  - Generally manually operated

CIRCUIT ANALYSIS BASICS
Medium Voltage Circuit Breaker Control

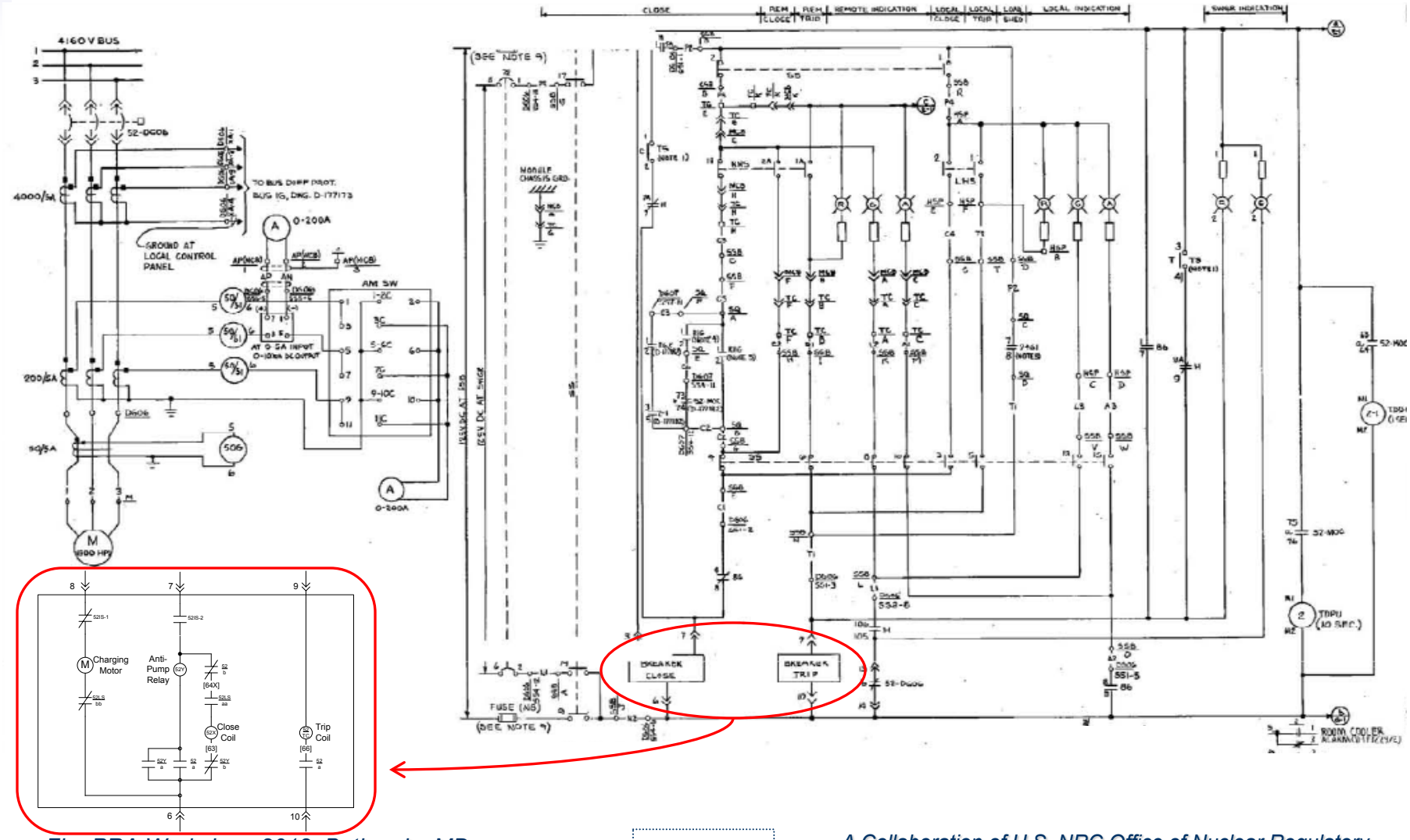

CIRCUIT ANALYSIS BASICS
Motors

- AC, DC, 1-phase, 3-phase
- Synchronous vs. induction design
- Large motors controlled by circuit breaker
- Smaller motors often controlled by a “motor starter”
- Continuous duty (pump) vs. intermittent duty (MOV)
- MOVs and DC motors are most often reversing design
- High temp is usually an alarm or time-delay trip
- Locked rotor current must be considered
- We don’t know anything else about motors

CIRCUIT ANALYSIS BASICS
Process Instruments & Reactor Protection

- Process Instrumentation
  - Temperature
  - Level
  - Flow
  - Pressure

- Reactor Trip
  - Trip signals
  - Actuation circuitry

- Engineered Safety Features Actuation System
  - Input signals
  - Actuation logic
  - Solid-state protection system (SSPS)

CIRCUIT ANALYSIS BASICS
Instruments

- 4-20 mA output signal design is common
- Twisted shielded pair (TSP), coaxial cables
- Key elements of instrument loop
  - Loop power supply
  - Transmitter/sensor
  - Bi-stables for control and actuation signals
  - Indicators
- Provide
  - Indication
  - Alarm
  - RPS & ESFAS input
  - Control signals
- Comprised of multiple modules/cards
- Highly integrated signals – isolation is challenging
- Distinctly different from a circuit analysis perspective

CIRCUIT ANALYSIS BASICS
Miscellaneous Equipment

- Control Panels
- Power Panels
- Batteries
- Battery Chargers
- Inverters
- Other ??

CIRCUIT ANALYSIS BASICS
Fire-Induced Cable Failures

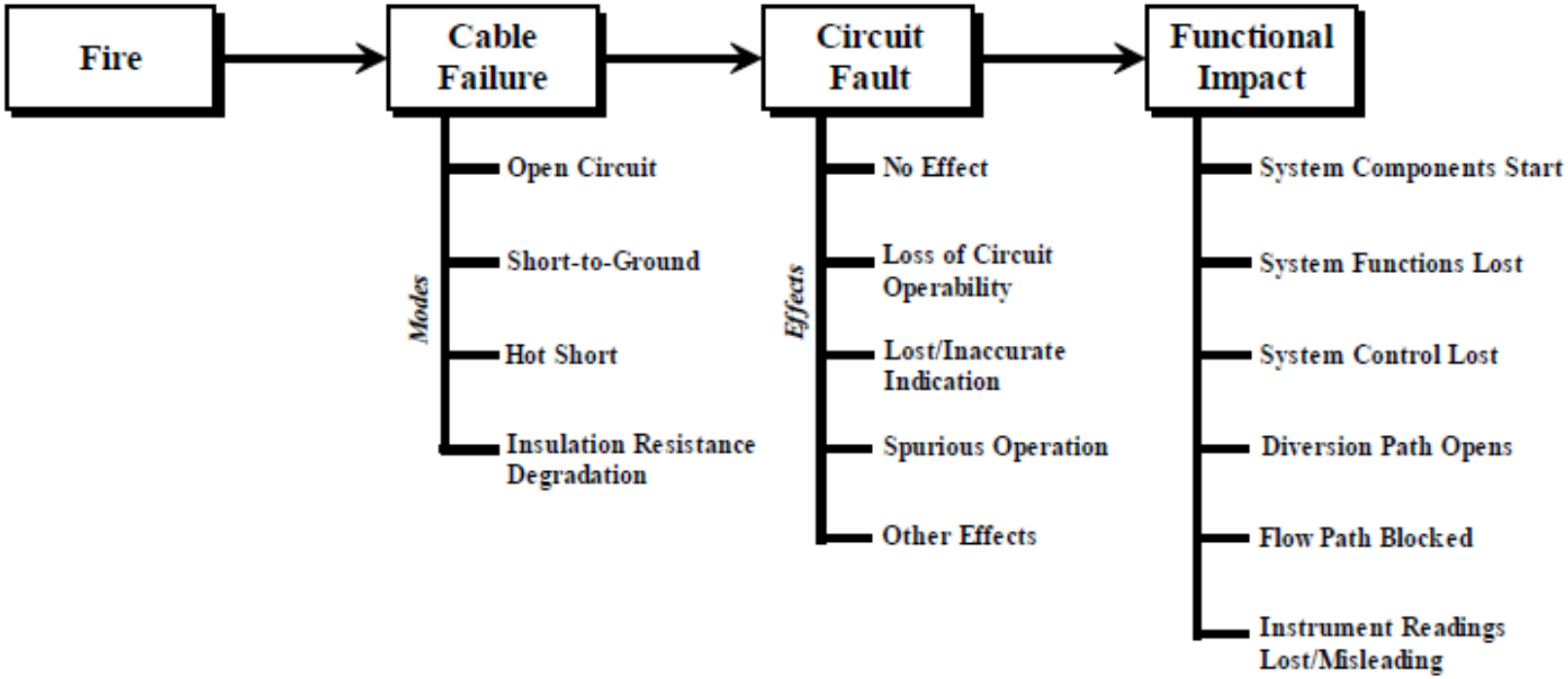

CIRCUIT ANALYSIS BASICS
Fire-Induced Cable Failures

- Short circuits
  - Short to earth ground
  - Short to reference ground
  - Conductor-to-conductor
- Open Circuits
- Hot Shorts
  - Intra-cable hot shorts
  - Inter-cable hot shorts
  - 3-Phase proper polarity hot shorts
  - Ungrounded DC proper polarity hot shorts
  - Multiple hot shorts

CIRCUIT ANALYSIS BASICS
Fire-Induced Cable Failures, cont…

- [Video clip & some photos from DC Tests]

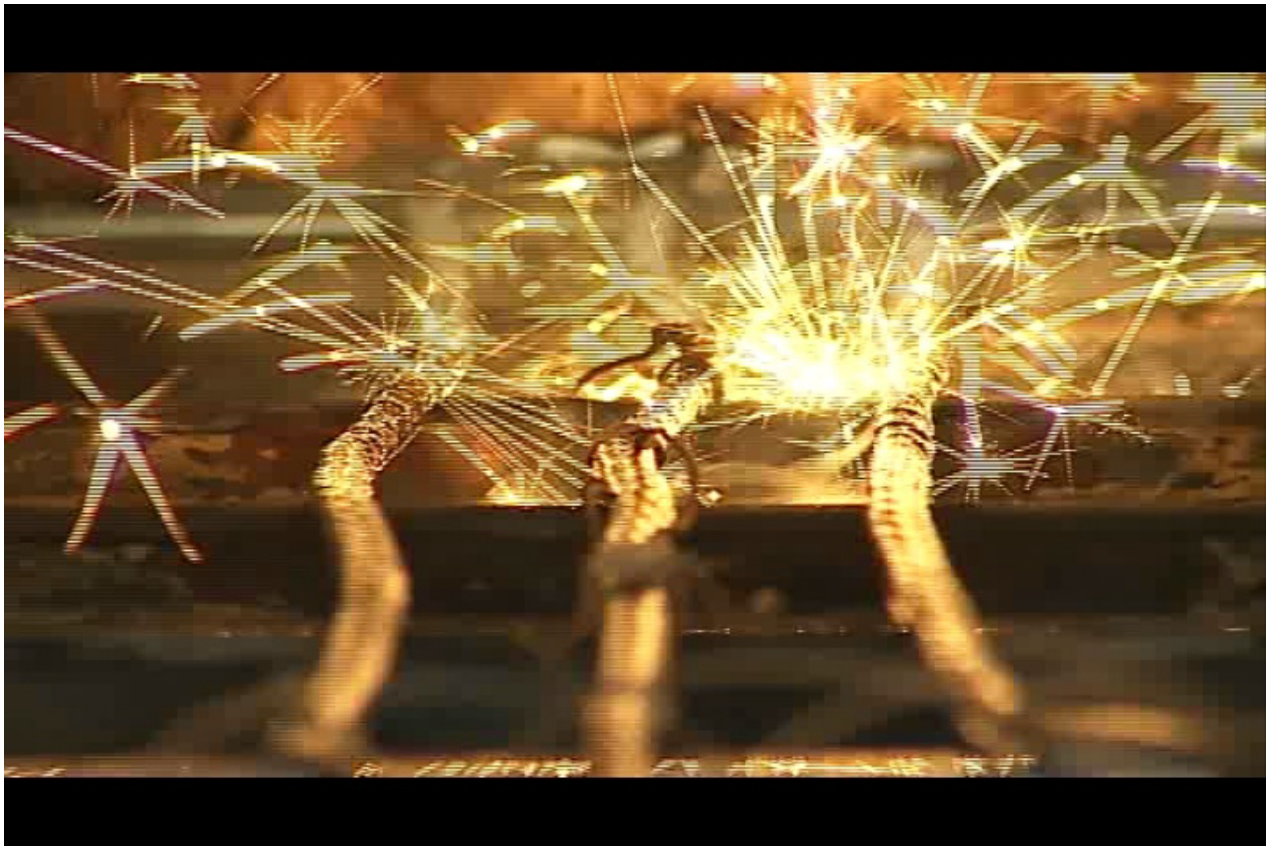

CIRCUIT ANALYSIS BASICS
Evolution of Fire Protection Circuit Analysis

- Appendix R – the early years
- Appendix R – the later years
- Appendix R – redux
- Early Generation Fire PRA
- Cable Fire Tests
- Operator Manual Actions
- NFPA 805
- EPRI 1011989 - NUREG/CR-6850 & Next Generation Fire PRA
- Multiple Spurious Operations (MSO)
- 10 CFR 50.48(c) – RIPB voluntary alternative to fire protection requirements
- NFPA 805 Transition Projects
- ANSI/ANS-58.23-2007 (now ASME/ANS RA-Sa-2009) “PRA Standard”
- Frequently Asked Questions (FAQ) Process

CIRCUIT ANALYSIS BASICS
Fire PRA Circuit Analysis – Module 2 Training Topics

- Task 3: Fire PRA Cable Selection
  - What cables are associated with the FPRA components?
- Task 9: Detailed Circuit Analysis
  - Task 9A & 9B Split
  - Which cables can affect the credited functionality?
  - What failure modes are possible given fire damage to the cable?
- Task 10: Circuit Failure Mode Likelihood Analysis
  - How likely to occur are the failure modes of concern?
- Support Task B: Fire PRA Database
  - Warehousing data and determining impacts

Questions ?