EPRI/NRC-RES FIRE PRA METHODOLOGY

Task 10 - Circuit Failure Mode Likelihood Analysis

Dan Funk – Kleinsorg Group
Gabriel Taylor – U.S. NRC
Office of Nuclear Regulatory Research

Joint RES/EPRI Fire PRA Training Workshop
Bethesda, MD, July and September 2012

A Collaboration of U.S. NRC Office of Nuclear Regulatory Research (RES) & Electric Power Research Institute (EPRI)

CIRCUIT FAILURE MODE LIKELIHOOD ANALYSIS
Purpose & Scope (per 6850/1011989)

The Circuit Failure Mode Likelihood Analysis Task is intended to:

- Establish first-order probability estimates for the Circuit Failure Modes of interest

AND

- Correlate those Failure Mode Probabilities to specific components

CIRCUIT FAILURE MODE LIKELIHOOD ANALYSIS
Corresponding PRA Standard Element

- Primary match is to element CF – Circuit Failures
  - CF Objectives (as stated in the PRA standard):

    "[T]o

    (a) refine the understanding and treatment of fire-induced circuit failures on an individual fire scenario basis

    (b) ensure that the consequences of each fire scenario on the damaged cables and circuits have been addressed"

CIRCUIT FAILURE MODE LIKELIHOOD ANALYSIS

HLRs (per the PRA Standard) – CF element

- HLR-CF-A: The Fire PRA shall determine the applicable conditional probability of the cable and circuit failure mode(s) that would cause equipment functional failure and/or undesired spurious operation based on the credited function of the equipment in the Fire PRA. (2 SRs)

- HLR-CF-B: The Fire PRA shall document the development of the elements above in a manner that facilitates Fire PRA applications, upgrades, and peer review. (1 SR)

CIRCUIT FAILURE MODE LIKELIHOOD ANALYSIS

NEI 00-01, Rev. 2, Section 5.2.1.2 – Probability of Spurious Actuation

- NEI 00-01, Rev. 2, "Guidance for Post-Fire Safe Shutdown Circuit Analysis," May 2009.
- Generally follows Option #1 of the Task 10 methodology in NUREG/CR-6850, EPRI TR 1011989.
- Recommends the use of spurious actuation probability point estimates from:
  - Table 2.8.3 in NRC Inspection Manual 0609, Appendix F ("FP SDP")
  - Tables 7.1 and 7.2 from EPRI Report 1006961 ("Expert Elicitation")

CIRCUIT FAILURE MODE LIKELIHOOD ANALYSIS
Introduction (1) (per 6850/1011989)

- This is a Probabilistic Based Analysis
- Two methods presented
  - Expert Panel results (“Look-Up Tables”)
  - Computation-based analysis (“Formulas”)
- Requires knowledge about circuit design, cable type and construction, installed configuration, and component attributes
- Generally reserved for only those cases that cannot be resolved through other means

CIRCUIT FAILURE MODE LIKELIHOOD ANALYSIS
Introduction (2)

- Caveats:
  - Our knowledge is greatly improved but uncertainties are still large
    - Very limited data for many issues
  - For this reason, implementing guidance is intended to be conservative
  - Practical implementation is challenging
  - Further analysis of existing test data and follow-on tests would be beneficial:
    - Reduce uncertainties, including conservatisms as appropriate
    - Solidify key influence factors
    - Incorporate time as a factor (FAQ 08-0051, for AC circuits only; Status: Closed)
    - Incorporate "End-Device" functional attributes and states (e.g., latching circuits vs. drop-out design)
    - Expert elicitation to produce refined spurious operation probabilities (Ongoing CY11)
  - Computation-based method (formula) is an extrapolation of existing data; validation remains to be done. Conservatism has not been established.
- Probabilities of sufficient quality to move ahead

CIRCUIT FAILURE MODE LIKELIHOOD ANALYSIS
Introduction (3)

- Public and Peer Review Comments
  - Several questions involving interpretation of the EPRI Test Data led to extensive discussions regarding the most appropriate way to tally spurious actuation probabilities (many subtleties for implementation)
  - Team's consensus is that Expert Panel Values are, in general, somewhat conservative
  - Additional independent review of the Computational Method was solicited as a result of Peer and Public Comments
    - Review was favorable, however the team acknowledges the inevitable limitations of the methodology

CIRCUIT FAILURE MODE LIKELIHOOD ANALYSIS
Introduction (4) – Related FAQ

- FAQ 08-0051 Hot Short Duration
  - Issue:
    - No guidance on the duration of hot shorts is provided in 6850/1011989
    - Hot shorts can produce undesirable conditions for Fire PRA components (e.g., pumps and valves)
    - The duration of a hot short is important since the affected component may be unable to perform its credited function and recovery may be delayed until the hot short is cleared
    - The clearing of the hot short may cause the component to return to its desired state or manual actions may be required to recover the equipment and its associated function
  - General approach to resolution:
    - A statistical analysis of the NEI/EPRI and CAROLFIRE test data was performed and resulted in a Weibull distribution model
    - The model predicts the probability of the duration of a spurious actuation from a hot short lasting greater than or equal to time, t, in minutes to be

      $$\mathbf{P}(T \geq t) = \exp(-\lambda t^{\beta})$$

      where, $\lambda = 0.963$ and $\beta = 0.579$,

      and $\mathbf{P}(T \geq 15 \text{ minutes}) = 0.01$
    - See A. Klein (NRR), AFPB File Memorandum, April 1, 2010, "Closure of National Fire Protection Association 805 Frequently Asked Question 08-0051 Hot Short Duration" (ML100900052) for additional details and <u>limitations of use</u>
  - Status:
    - Closed

CIRCUIT FAILURE MODE LIKELIHOOD ANALYSIS
Assumptions

The following assumptions form the basis for Task 10:

- Specific cable/circuit configuration attributes are available or can be determined
- The equipment is in its normal position or operating condition at the onset of the fire
- Users of this procedure are knowledgeable and have experience with circuit design and analysis methods and probability estimating techniques
- This analysis method is applied to cables with no more than 15 conductors

CIRCUIT FAILURE MODE LIKELIHOOD ANALYSIS
Process

- The Task 10 procedure is subdivided into four (4) primary steps:
  - Step 1: Compile and Evaluate Prerequisite Information and Data
  - Step 2: Select Analysis Approach
  - Step 3: Perform Circuit Failure Mode Probability Analyses
  - Step 4: Generate Circuit Failure Mode Probability Reports

CIRCUIT FAILURE MODE LIKELIHOOD ANALYSIS
Task Interfaces - Inputs

- Fire PRA Cable List (Task 3)
- Fire PRA Database (Support Task B)
- Results of Detailed Circuit Failure Analysis (Task 9)
- Specific Scenarios Identifying Affected Cables (Tasks 11 & 14)
- Cable & Circuit Configuration Attributes
- Plant Drawings

CIRCUIT FAILURE MODE LIKELIHOOD ANALYSIS
Task Interfaces - Outputs

- Quantification of Fire Risk (Task 14)
- Post-Fire HRA (Task 12)
- Detailed Fire Scenario Quantification (Task 11)
- Circuit Failure Mode Probability Reports
- Component Work Packages (Finalized)
- Fire PRA Database & Model

CIRCUIT FAILURE MODE LIKELIHOOD ANALYSIS
Step 1 - Compile Prerequisite Information

Ensure that prerequisite information and data are available and usable before beginning the analyses.

- Confirm completion of Detailed Circuit Analysis for components of interest
- Collect important cable and configuration attribute information:
  - Insulation
  - Number of conductors
  - Raceway types
  - Power source(s)
  - Number of Source & Target conductors (for Option #2 only)

CIRCUIT FAILURE MODE LIKELIHOOD ANALYSIS
Step 2 - Select Analysis Approach

Decide which analysis option is best suited for conducting the evaluation.

1. Select Failure Mode Probability Estimate from Look-Up Tables
   - Grounded circuit design
   - Non-complex control circuit
   - Single component service
   - Cable configuration matches Look-Up Table categories
   - Principal failure mode of concern is Spurious Actuation
2. Calculate Probability Estimate using Formulas
   - Ungrounded or resistance-grounded circuit design
   - Complex circuit or component
   - Failure potentially affects multiple components
   - Cable configuration not easily categorized in Look-Up Tables

- Corresponding PRA Standard SRs: CF-A1

CIRCUIT FAILURE MODE LIKELIHOOD ANALYSIS
Step 3 - Estimate Circuit Failure Mode Probabilities

Estimate Circuit Failure Mode Probabilities employing the selected method:

Option #1: Failure Mode Probability Estimate Tables

- Table 10-1, Thermoset Cables with CPTs
- Table 10-2, Thermoset Cables without CPTs
- Table 10-3, Thermoplastic Cables with CPTs
- Table 10-4, Thermoplastic Cables without CPTs
- Table 10-5, Armored or Shielded Cables

Option #2: Computational Probability Estimate Formulas

$$P_{CC} = (C_{Tot} - C_G) / [(C_{Tot} - C_G) + (2 \times C_G) + n]$$

$$CF = \{C_T \times [C_S + (0.5 / C_{Tot})]\} / C_{Tot}$$

$$P_{FM} = CF \times P_{CC}$$

- Corresponding PRA Standard SRs: CF-A1, A2
- Corresponding NEI 00-01, Rev. 2, Section: 5.2.1.2 (Option #1 only)

CIRCUIT FAILURE MODE LIKELIHOOD ANALYSIS
Step 3 – Related FAQ

- FAQ 08-0047 Cable Dependency
  - Issue:
    - Guidance (Vol. 2, Page 10-7, Bullet 3) states that when more than one cable can cause the same spurious actuation you combine probabilities using “exclusive or” (XOR)
    - This assumes faults/effects are independent
  - General approach to resolution:
    - Consensus reached that “exclusive or” is not appropriate if faults are dependent (e.g., a common power supply for both cables)
    - Clarify treatment to determine and address dependency
  - Status:
    - Closed

CIRCUIT FAILURE MODE LIKELIHOOD ANALYSIS
Step 4 - Generate Failure Mode Probability Reports

- Enter results into the Fire PRA Database
- Generate Circuit Failure Mode Probability Reports
  - Listing the Probability Estimates for the Circuit Failure Modes of Concern for Each Component of Interest by Plant Area (Compartment, Fire Area, Fire Zone, etc.)
- Corresponding PRA Standard SRs: CF-B1

CIRCUIT FAILURE MODE LIKELIHOOD ANALYSIS
Example – Simple AOV/SOV Control Circuit

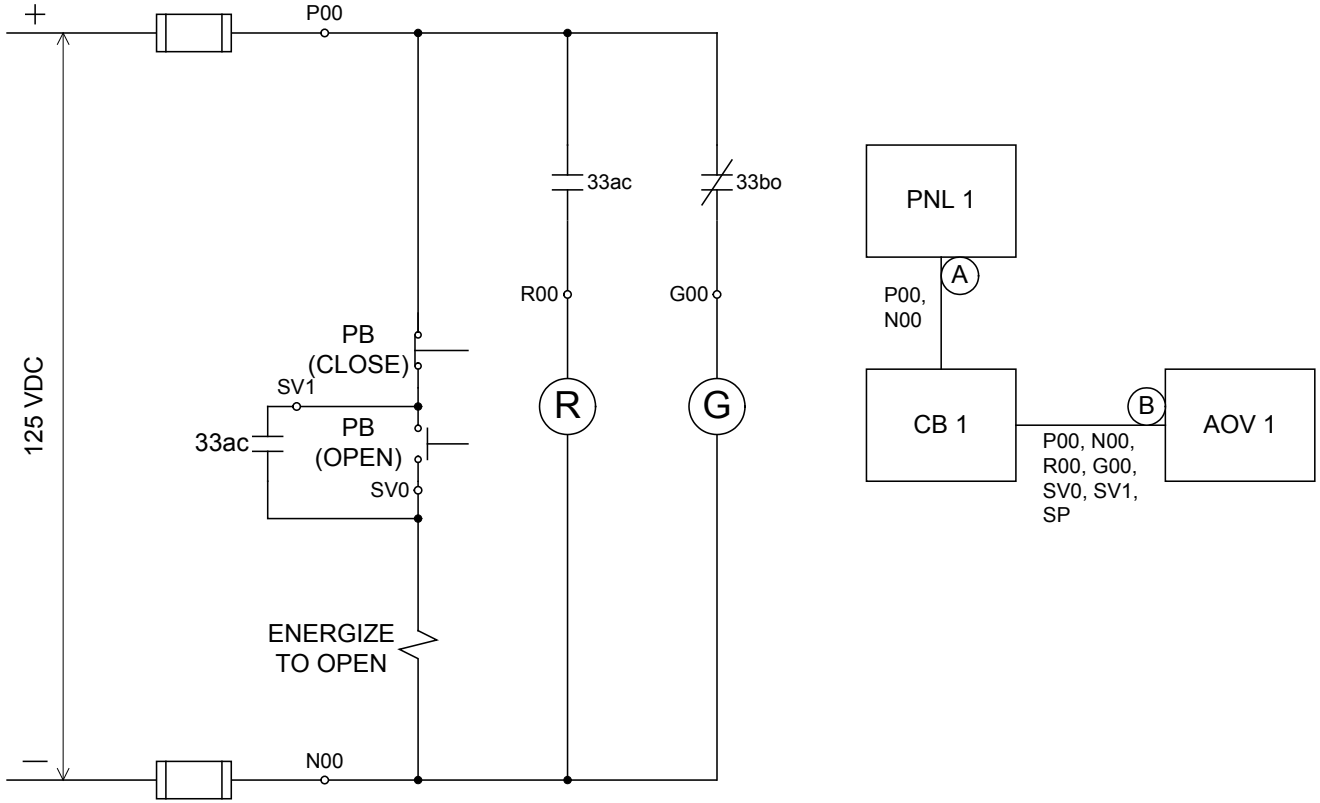

QUESTION: What is the *probability* that damage to Cable B will result in spurious opening of the AOV?

See next slide →

CIRCUIT FAILURE MODE LIKELIHOOD ANALYSIS
Example – Step 1: Prerequisite Information

- Detailed circuit analysis completed & documented? ***Yes***

Cable	+125 VDC Hot Probe	-125 VDC Reference Ground Probe
A	LOP-FB	LOP-FB
B	LOP-FB, EI-HS, SO-HS	LOP-FB, LOC

- Collect important cable and configuration data:
  - Cable insulation? ***Thermoset***
  - Number of conductors? ***Seven***
  - Raceway type? ***Tray***
  - Power source? ***Ungrounded DC bus (no CPT)***
  - Number of source & target conductors? ***3 sources, 1 target***

See next slide →

CIRCUIT FAILURE MODE LIKELIHOOD ANALYSIS
Example – Step 2: Select Analysis Approach

- Option #1: Failure Mode Probability Tables
  - Grounded circuit design? ***No***
  - Control circuit cable? ***Yes***
  - Single component circuit? ***Yes***
  - Known cable configuration? ***Yes***
  - Spurious actuation concern? ***Yes***
- Option #2: Computational Probability Estimate
  - Ungrounded circuit? ***Yes***
  - Complex circuit/component? ***No***
  - Multiple component circuit? ***No***
  - Cable configuration not categorized? ***No***

For this example, we'll show both methods

See next slide →

CIRCUIT FAILURE MODE LIKELIHOOD ANALYSIS
Example – Step 3: Perform Analysis (1)

- Option #1:
  - Which Table to Use? ***Table 10-2, Thermoset Cable without CPT***

Raceway Type	Description of Hot Short	Best Estimate	High Confidence Range
Tray	M/C Intra-cable 1/C Inter-cable M/C → 1/C Inter-cable M/C → M/C Inter-cable	0.60 0.40 0.20 0.02 – 0.1	0.20 – 1.0 0.1 – 0.60 0.1 – 0.40
Conduit	M/C Intra-cable 1/C Inter-cable M/C → 1/C Inter-cable M/C → M/C Inter-cable	0.15 0.1 0.05 0.01 – 0.02	0.05 – 0.25 0.025 – 0.15 0.025 – 0.1

  - SO Probability Estimate, **P** = <u>0.62</u> (0.60 + 0.06 – 0.60*0.06)

See next slide →

CIRCUIT FAILURE MODE LIKELIHOOD ANALYSIS
Example – Step 3: Perform Analysis (2)

- Option #2:
  - Calculate probability of a conductor-to-conductor short:

$$P_{CC} = (C_{Tot} - C_G) / [(C_{Tot} - C_G) + (2 * C_G)]$$

$$P_{CC} = (7 - 1) / [(7 - 1) + (2 * 1)]$$

$$P_{CC} = 6 / [6 + 2]$$

$$P_{CC} = 0.75$$

  - Determine cable configuration factor:

$$CF_{SO} = \{C_T * [C_S + (0.5 / C_{Tot})]\} / C_{Tot}$$

$$CF_{SO} = \{1 * [3 + (0.5 / 7)]\} / 7$$

$$CF_{SO} = 3.071 / 7$$

$$CF_{SO} = 0.44$$

  - Probability of spurious actuation, $\mathbf{P}_{SO} = 0.75 * 0.44 = \underline{0.33}$

CIRCUIT FAILURE MODE LIKELIHOOD ANALYSIS
Example – Step 4: Failure Mode Probability Report

Failure Code	Estimated Probability (Calculated)	Estimated Probability (From Table 10-2)
SO-HS	0.33	0.62

CIRCUIT FAILURE MODE LIKELIHOOD ANALYSIS
Recommended Step-by-Step Process for Task 10 Analyses

1. Determine appropriate option for estimating failure mode probability:
   a) Grounded circuit?
   b) Simple circuit design?
   c) Single affected component?
   d) Cable configuration compatible with an Expert Table (Ref. EPRI TR 1011989 – NUREG/CR-6850, Vol. 2, Tables 10-1 through 10-5)?
   e) Spurious actuation is failure mode of concern?

- If all answers (a through e) are "**Yes**," then use appropriate Look-Up Table values – Option #1
- If all answers are "**No**," then use formula method – Option #2
- If answers are a mix of "Yes" and "No," then use best engineering judgment for the specific cable/circuit being analyzed to select the appropriate option.

2. If multiple cables for equipment can result in the same failure mode, then logically combine the probability values (XOR)
   a) If the multiple cables can also fail such that power to the circuit is cut off, then only use the highest probability value determined for the cable set (Ref. FAQ 08-0047)

CIRCUIT FAILURE MODE LIKELIHOOD ANALYSIS
Questions

Any Questions?

CIRCUIT FAILURE MODE LIKELIHOOD ANALYSIS

Mapping HLRs & SRs for the CF technical element to NUREG/CR-6850, EPRI TR 1011989

Technical Element	HLR	SR	6850/1011989 Sections that cover SR	Comments
CF	A	The Fire PRA shall determine the applicable conditional probability of the cable and circuit failure mode(s) that would cause equipment functional failure and/or undesired spurious operation based on the credited function of the equipment in the Fire PRA.		
		1	10.5.2, 10.5.3	
		2	10.5.3	
	B	The Fire PRA shall document the development of the elements above in a manner that facilitates Fire PRA applications, upgrades, and peer review.		
		1	9.5.3, 10.5.3	Also covered in "Detailed Circuit Failure Analysis" chapter

CIRCUIT FAILURE MODE LIKELIHOOD ANALYSIS

Mapping NEI 00-01, Rev. 2, Risk Significance Analysis to NUREG/CR-6850, EPRI TR 1011989

NEI 00-01, Rev. 2, Section	NEI 00-01 – Probability of Spurious Actuation	6850/1011989 Sections that cover step	Comments
5 – Risk Signifi-cance Analysis	5.2.1.2	10.5.3	NEI 00-01, Rev. 2, only recommends use of tables to determine spurious actuation probability estimates. NUREG/CR-6850, EPRI TR 1011989 also offers formula method.