EPRI/NRC-RES FIRE PRA METHODOLOGY

Task 9 - Detailed Circuit Failure Analysis

Dan Funk – Kleinsorg Group
Gabriel Taylor – U.S. NRC
Office of Nuclear Regulatory Research

Joint RES/EPRI Fire PRA Training Workshop
Bethesda, MD, July and September 2012

A Collaboration of U.S. NRC Office of Nuclear Regulatory Research (RES) & Electric Power Research Institute (EPRI)

DETAILED CIRCUIT FAILURE ANALYSIS
Purpose & Scope (per 6850/1011989)

The Detailed Circuit Failure Analysis Task is intended to:

- Identify the potential response of circuits and components to specific cable failure modes associated with fire-induced cable damage
- Screen out cables that do not impact the ability of a component to complete its credited function

DETAILED CIRCUIT FAILURE ANALYSIS
Corresponding PRA Standard Elements

- One match is to element CS – Cable Selection
  - CS Objectives (as stated in the PRA standard):

    "[T]o ensure that

    (a) all cables needed to support proper operation of equipment selected per technical element ES (see 4-2.2) are identified and assessed for relevance to the Fire PRA plant response model

    (b) the plant location information for selected cables is sufficient to support the Fire PRA and its intended applications."

DETAILED CIRCUIT FAILURE ANALYSIS
Corresponding PRA Standard Elements (continued)

- Another match is to element CF – Circuit Failures
  - CF Objectives (as stated in the PRA standard):

    "[T]o

    (a) refine the understanding and treatment of fire-induced circuit failures on an individual fire scenario basis

    (b) ensure that the consequences of each fire scenario on the damaged cables and circuits have been addressed"

DETAILED CIRCUIT FAILURE ANALYSIS

HLRs (per the PRA Standard) – CS element

- HLR-CS-A: The Fire PRA shall identify *and* locate the plant cables whose failure could adversely affect credited equipment or functions included in the Fire PRA plant response model, as determined by the equipment selection process (HLR-ES-A, HLR-ES-B, and HLR-ES-C). (11 SRs)
- HLR-CS-B: The Fire PRA shall
  - *(a)* perform a review for additional circuits that are either required to support a credited circuit (i.e., per HLR-CS-A) or whose failure could adversely affect a credited circuit
  - *(b)* identify any additional equipment and cables related to these additional circuits in a manner consistent with the other equipment and cable selection requirements of this Standard. (1 SR)
- HLR-CS-C: The Fire PRA shall document the cable selection and location process and results in a manner that facilitates Fire PRA applications, upgrades, and peer review. (4 SRs)

DETAILED CIRCUIT FAILURE ANALYSIS
HLRs (per the PRA Standard) – CF element

- HLR-CF-A: The Fire PRA shall determine the applicable conditional probability of the cable and circuit failure mode(s) that would cause equipment functional failure and/or undesired spurious operation based on the credited function of the equipment in the Fire PRA. (2 SRs)
- HLR-CF-B: The Fire PRA shall document the development of the elements above in a manner that facilitates Fire PRA applications, upgrades, and peer review. (1 SR)

DETAILED CIRCUIT FAILURE ANALYSIS

NEI 00-01, Rev. 2, Section 3.5 – Circuit Analysis and Evaluation

- NEI 00-01, Rev. 2, "Guidance for Post-Fire Safe Shutdown Circuit Analysis," May 2009.
- Generally follows the Task 9 methodology of NUREG/CR-6850, EPRI TR 1011989.
- Types of circuit failures to be considered:
  - Open circuits (available fault energy)
  - Shorts-to-ground
  - Hot shorts (new insights)
- Other considerations:
  - Common power supplies (i.e., inadequate coordination)
  - Common enclosures (i.e., inadequate circuit protection)

DETAILED CIRCUIT FAILURE ANALYSIS
Introduction (1) (per 6850/1011989)

- Fundamentally this is a deterministic analysis
- Perform coincident with cable selection (Task 3) to the extent feasible and cost effective ("Task 9A")
- Difficult cases generally reserved for situations in which Quantitative Screening indicates a clear need and advantage for further analysis
- Detailed Failure Modes Analysis
  - Requires knowledge about desired functionality and component failure modes
  - Conductor-by-conductor evaluation (Hot Probe method recommended)
- Objective is to screen out all cables that **CANNOT** impact the ability of a component to fulfill the specific function of interest

DETAILED CIRCUIT FAILURE ANALYSIS
Introduction (2)

- Failure modes considered
  - Single shorts-to-ground (reference ground)
    - Grounded system
    - Ungrounded system
    - Resistance grounded system
  - Single hot shorts
  - Compatible polarity multiple hot shorts for ungrounded AC and DC circuits (surrogate path through raceway)
  - Coincident independent hot shorts on separate cables
  - Multiple intra-cable hot shorts
  - Cables associated through a common power supply

DETAILED CIRCUIT FAILURE ANALYSIS
Introduction (3)

- Failure modes **NOT** considered
  - 3-phase proper sequence hot shorts (except high consequence equipment with thermoplastic insulated conductor or ungrounded configuration)
  - Inter-cable hot shorts for armored cable and cable in dedicated conduit
  - Open circuit conductor failures (Reconsider)
  - Multiple high-impedance faults

Note: If conducting a combined NFPA-805 and Fire PRA circuit analysis, NEI 00-01 requires open circuits be considered.

DETAILED CIRCUIT FAILURE ANALYSIS
Introduction (4)

Application of Task 9A versus Task 9B:

- Task 9A circuit analysis performed as part of the Task 3, Cable Selection, process
  - Intended to be a very quick screening determination about whether a given cable is able to adversely impact the ability of a required component to complete its credited function, and thus should be put on the Fire PRA Cable List
- Detailed circuit analysis (Task 9B) is performed as described by the Task 9 methodology (i.e., the basis of this presentation)
  - Intended to be a more robust assessment of a cable's potential impact on the Fire PRA component of interest and is performed later in the overall Fire PRA process, after some screening has occurred

Note: The more experience an analyst has performing Task 9B level analyses, the more proficient they become in performing Task 9A level screening.

DETAILED CIRCUIT FAILURE ANALYSIS
Assumptions

The following assumptions form the basis for Task 9:

- An Appendix R analysis for the plant has been completed and is available for identifying equipment failure responses to specific cable failure modes
- Component **Work Packages** have been assembled as part of the Task 3 activities or previous Appendix R analyses
- Equipment is assumed to be in its normal position or operating condition at the onset of the fire – the equipment state might be variable
- Users of this procedure are knowledgeable on and have experience with circuit design and analysis methods

DETAILED CIRCUIT FAILURE ANALYSIS
Process

- The Task 9 procedure is subdivided into three (3) primary steps:
  - Step 1: Compile and Evaluate Prerequisite Information and Data
  - Step 2: Perform Detailed Circuit/Cable Failure Analysis
  - Step 3: Generate Equipment Failure Response Reports

DETAILED CIRCUIT FAILURE ANALYSIS
Task Interfaces - Inputs

- Fire PRA Components List (Task 2)
- Fire PRA Cable List (Task 3)
- Fire PRA Database (Support Task B)
- Results of Quantitative Screening (Task 7)
- Results of Detailed Fire Modeling (Task 11)
- Appendix R Circuit Analysis
- Plant Drawings
- CRS Database

DETAILED CIRCUIT FAILURE ANALYSIS
Task Interfaces - Outputs

- Equipment Failure Response Reports
- Component Analysis (“Work”) Packages (Updated)
- Revised Cable List
- Fire PRA Database & Model Updates

DETAILED CIRCUIT FAILURE ANALYSIS
Step 1 - Compile Prerequisite Information

- Ensure that prerequisite information and data are available and usable before beginning the analyses (ideally the necessary drawings are already in the Work Packages).

- Step 1.1: Confirm Fire PRA Cable List is Available in the Fire PRA Database
  - Component ⇒ Cable ⇒ Raceway ⇒ Compartment

- Step 1.2: Confirm Unscreened Plant Compartments and Scenarios are Identified
  - Target Equipment Loss Reports
  - Equipment ID, Normal Status, Functional Requirements, etc.

DETAILED CIRCUIT FAILURE ANALYSIS
Step 2 - Perform Circuit Failure Analysis

- Perform a *Deterministic-Based* detailed circuit analysis for the Fire PRA cables of interest that are located in the unscreened plant locations.
- Step 2.1: Develop Strategy/Plan for Circuit Analysis
- Step 2.2: Develop Plant-Specific Rules for Performing the Detailed Circuit Analysis
- Step 2.3: Perform Detailed Circuit Failure Analysis
- Document Analysis Results $\Rightarrow$ Component Work Packages

- Corresponding PRA Standard SRs: CS-A2, A3, A5, A6, A7, A8, A9
- Corresponding NEI 00-01, Rev. 2, Section: 3.5.2

DETAILED CIRCUIT FAILURE ANALYSIS
Considerations in Developing Plant-Specific Rules

- Consider the following while developing the plant-specific circuit analysis rules:
  - The types of cable failure modes (hot shorts, shorts to ground) and the effects of concern (spurious actuation, loss of power, loss of control, etc.) on the Fire PRA component.
  - Three-phase proper polarity hot shorts on AC power cables
    - Grounded AC systems using thermoset-insulated cable
    - Ungrounded AC systems **or** thermoplastic-insulated cable
    - Armored cable or cable in dedicated conduit
  - Intra-cable versus Inter-cable hot shorts
  - DC circuit cable failures
  - Coincident independent hot shorts involving separate cables
  - Compatible polarity multiple hot shorts on ungrounded circuits

DETAILED CIRCUIT FAILURE ANALYSIS
Step 3 - Generate Equipment Failure Response Reports

- Enter results into Fire PRA Database

- Generate Equipment Failure Response Reports
  - A listing by location (room, zone, area) of equipment and associated cables affected by fire
  - Provides specific equipment responses (cable failure consequences) that affect the credited function being analyzed
  - Equipment losses should be correlated to each Basic Event

- Corresponding PRA Standard SRs: CF-B1

DETAILED CIRCUIT FAILURE ANALYSIS
Caveats & Recommendations

- This detailed circuit failure analysis methodology is a Static Analysis (no timing issues are considered)
- Be aware of possible Cable Logic Relationships
- Work Packages (Highly Recommended!)
- "Hot Probe" (Conductor-to-Conductor) analysis must be rolled-up to cable/component level
- Outputs need to be Compatible with Fire PRA Database format and field structure
- Coordinate with the Fire PRA Modelers/Analysts early-on to Define the Fire PRA Component Failure Modes of Concern

DETAILED CIRCUIT FAILURE ANALYSIS
Recommended Notation for Analysis

- It is highly recommended that the analysts employ a consistent notation for documenting their results
- In this training course, we will use the following notations:

Primary Circuit Failure Mode Descriptions

EI	Erroneous Indication
EIS	Erroneous Indicating Signal
LIS	Loss of Indicating Signal
LOC	Loss of Control
LOCP	Loss of Control Power (usually applies only to metalclad switchgear that depend on a separate control power source to actuate)
LOI	Loss of Indication
LOP	Loss of Power (to the circuit)
SA	Spuriously Actuates or Spurious Actuation
SC	Spuriously Closes
SO	Spuriously Opens
SS	Spuriously Starts/Runs

Causal Modifiers

BF	Blown Fuse
HS	Hot Short
PR	Protective Relay
SG	Short to Ground

Example Usage:

LOP-BF:	Loss of power due to a blown fuse
SO-HS:	Spuriously opens due to a hot short
LOC-PR:	Loss of control due to a protective relay

DETAILED CIRCUIT FAILURE ANALYSIS
Hot Probe Method – A very simple example

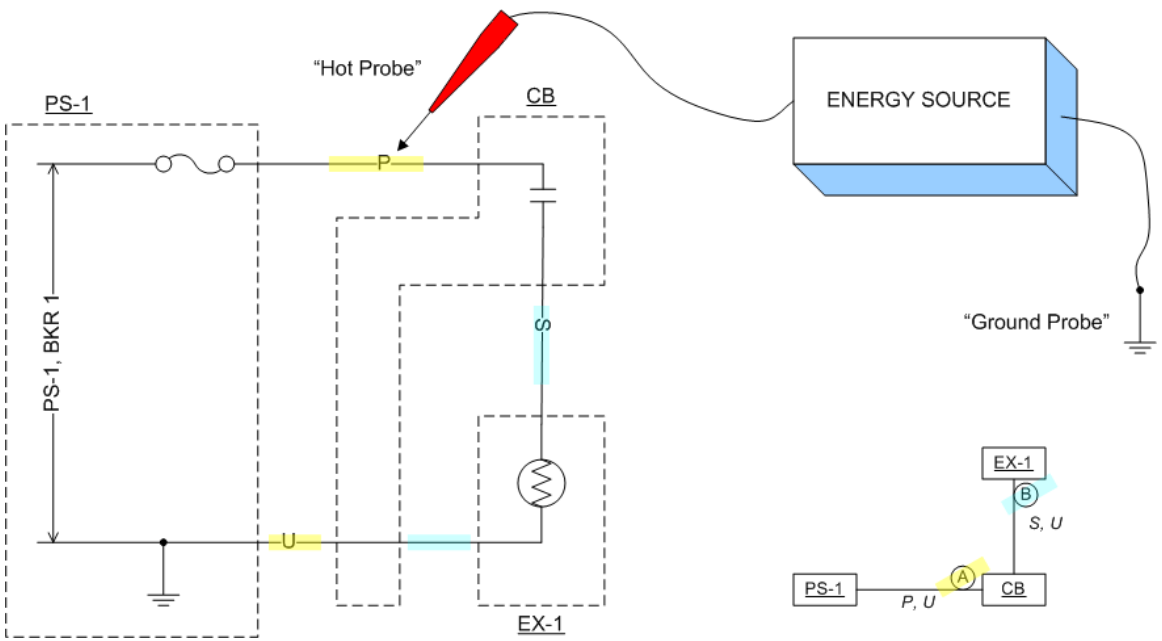

What happens when the **Hot** & **Ground** probes contact:

Conductor	Hot (+) Probe	Ground Probe
P?		
S?		
U?		

DETAILED CIRCUIT FAILURE ANALYSIS
Hot Probe Method Results & Documentation

CIRCUIT ANALYSIS WORKSHEET

Component ID: Ex-1 Component Type: Electrical Component

Component Description: Example 1

Normal Position: DEENERGIZED

Failed Electrical Position: DEENERGIZED

Failed Air Position: N/A

Function State:

Initial Position: DEENERGIZED

Desired Position DEENERGIZED

BE Code: EX1-SA

High Consequence Component Yes ☐ No ☒

Power Supplies: PS-1 Breaker: 1 Req'd ☐

Breaker: Req'd ☐

Cable Analysis:

Cable ID	Req'd ?	MHS ?	Fault Consequence	Comments
EX1A	N			
EX1B	Y		SA, LOC	Pos. hot probe on S causes SA Pos. hot probe on U causes LOC
				Ground probe on S causes LOC

This part will be provided.

If not complete, then ***ask*** for the missing information.

This part and 2nd page ***you*** will complete.

Basically, this documents your analysis.

Note: More about performing Circuit Analysis will be provided in the Electrical Examples presentation.

DETAILED CIRCUIT FAILURE ANALYSIS
Questions

Any Questions?

DETAILED CIRCUIT FAILURE ANALYSIS

Mapping HLRs & SRs for the CS technical element to NUREG/CR-6850, EPRI TR 1011989

Technical Element	HLR	SR	6850/1011989 Sections that cover SR	Comments
CS	A	The Fire PRA shall identify and locate the plant cables whose failure could adversely affect credited equipment or functions included in the Fire PRA plant response model, as determined by the equipment selection process (HLR-ES-A, HLR-ES-B, and HLR-ES-C).		
		1	3.5.2	Covered in "Fire PRA Cable Selection" chapter
		2	9.5.2	
		3	3.5.2, 9.5.2	Also covered in "Fire PRA Cable Selection" chapter
		4	3.5.3	Covered in "Fire PRA Cable Selection" chapter
		5	9.5.2	
		6	3.5.4, 9.5.2	Also covered in "Fire PRA Cable Selection" chapter
		7	9.5.2	
		8	9.5.2	
		9	9.5.2	
		10	3.5.5	Covered in "Fire PRA Cable Selection" chapter
		11	3.5.5	Covered in "Fire PRA Cable Selection" chapter
	B	The Fire PRA shall (a) perform a review for additional circuits that are either required to support a credited circuit (i.e., per HLR-CS-A) or whose failure could adversely affect a credited circuit (b) identify any additional equipment and cables related to these additional circuits in a manner consistent with the other equipment and cable selection requirements of this Standard		
		1	3.5.3, 3.5.4	Covered in "Fire PRA Cable Selection" chapter
	C	The Fire PRA shall document the cable selection and location process and results in a manner that facilitates Fire PRA applications, upgrades, and peer review.		
		1	3.5.6	Covered in "Fire PRA Cable Selection" chapter
		2	3.5.6	Covered in "Fire PRA Cable Selection" chapter
		3	3.5.6	Covered in "Fire PRA Cable Selection" chapter
		4	3.5.6	Covered in "Fire PRA Cable Selection" chapter

DETAILED CIRCUIT FAILURE ANALYSIS

Mapping HLRs & SRs for the CF technical element to NUREG/CR-6850, EPRI TR 1011989 (continued)

Technical Element	HLR	SR	6850/1011989 Sections that cover SR	Comments
CF	A	The Fire PRA shall determine the applicable conditional probability of the cable and circuit failure mode(s) that would cause equipment functional failure and/or undesired spurious operation based on the credited function of the equipment in the Fire PRA.		
		1	10.5.2, 10.5.3	Covered in "Circuit Failure Mode Likelihood Analysis" chapter
		2	10.5.3	Covered in "Circuit Failure Mode Likelihood Analysis" chapter
	B	The Fire PRA shall document the development of the elements above in a manner that facilitates Fire PRA applications, upgrades, and peer review.		
		1	9.5.3, 10.5.3	Also covered in "Circuit Failure Mode Likelihood Analysis" chapter

DETAILED CIRCUIT FAILURE ANALYSIS

Mapping NEI 00-01, Rev. 2, Circuit Analysis and Evaluation to NUREG/CR-6850, EPRI TR 1011989

NEI 00-01, Rev. 2, Section	NEI 00-01, Section 3.5.2 – Types of Circuit Failures	6850/1011989 Sections that cover step	Comments
3.5 – Circuit Analysis and Evaluation	3.5.2.1: Due to an Open Circuit	N/A	Open circuits not considered in 6850/1011989 as discussed in 9.5.2
	3.5.2.2: Due to a Short-to-Ground	9.5.2	
	3.5.2.3: Due to a Hot Short	9.5.2	
	3.5.2.4: Due to Inadequate Circuit Coordination	3.5.4	Covered in "Fire PRA Cable Selection" chapter
	3.5.2.5: Due to Common Enclosure Concerns	3.5.4	Covered in "Fire PRA Cable Selection" chapter