Basics 10

480 V Pump Block Diagram

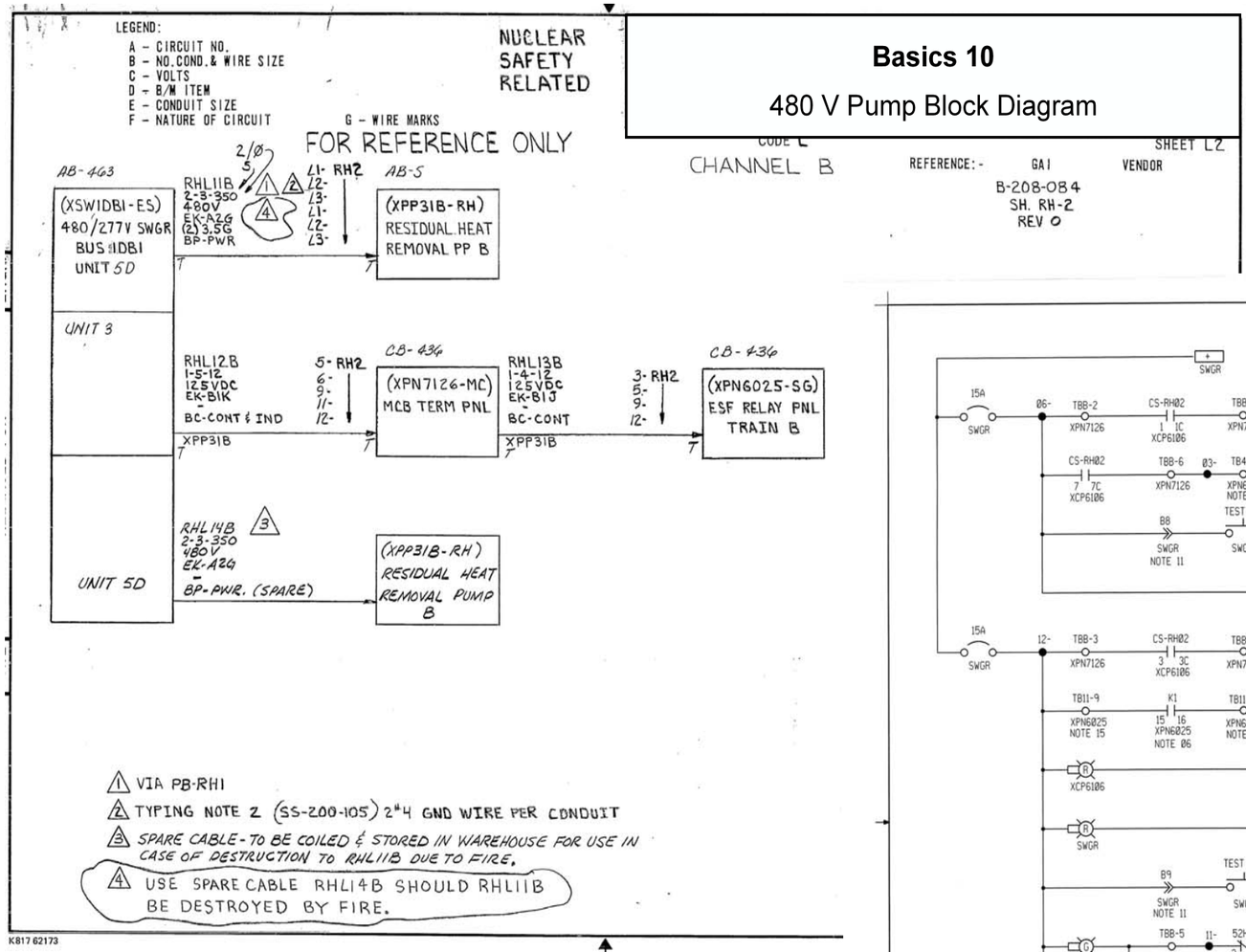

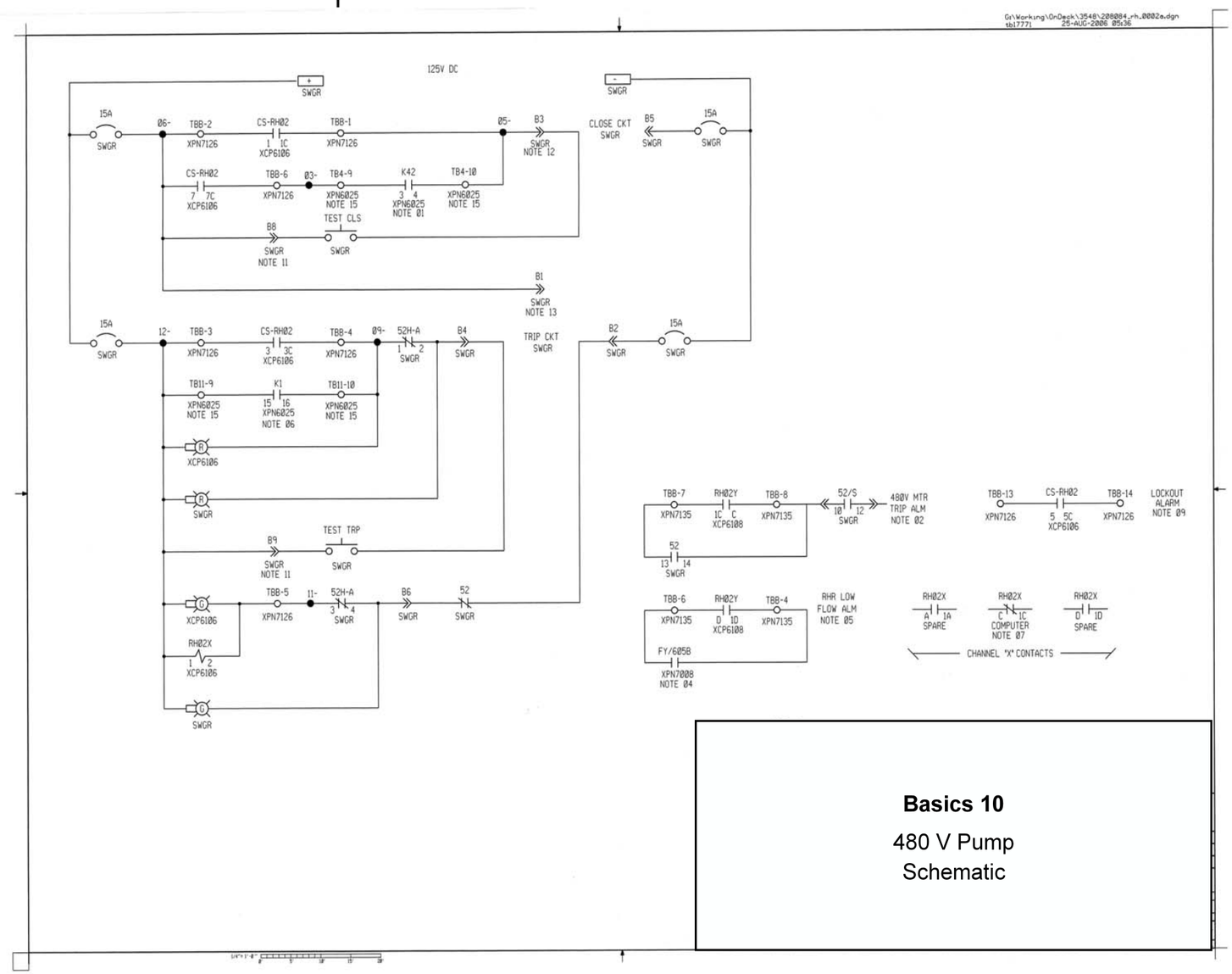

Basics 10

480 V Pump Schematic