CIRCUIT ANALYSIS WORKSHEET

Component ID: 52-DF01 Component Type: 4.16 KV BKR

Component Description: Example 16

Normal Position: CLOSED

Failed Electrical Position: AS-IS

Failed Air Position: N/A

Function State:

Initial Position: CLOSED

Desired Position CLOSED

BE Code: 52DF01-FTRC

High Consequence Component Yes ☐ No ☒

Power Supplies: _____ Breaker: _____ Req'd ☐

_____ Breaker: _____ Req'd ☐

Cable Analysis:

Cable ID	Req'd ?	MHS ?	Fault Consequence	Comments

Cable ID	Req'd ?	MHS ?	Fault Consequence	Comments

Equipment Dependencies:

Comments:

Fault Mode Likelihood Analysis:

Cable ID	Insulation	Raceway	6850 Table	No. Cond	Gnd Cond	Sources	Targets	P (x)

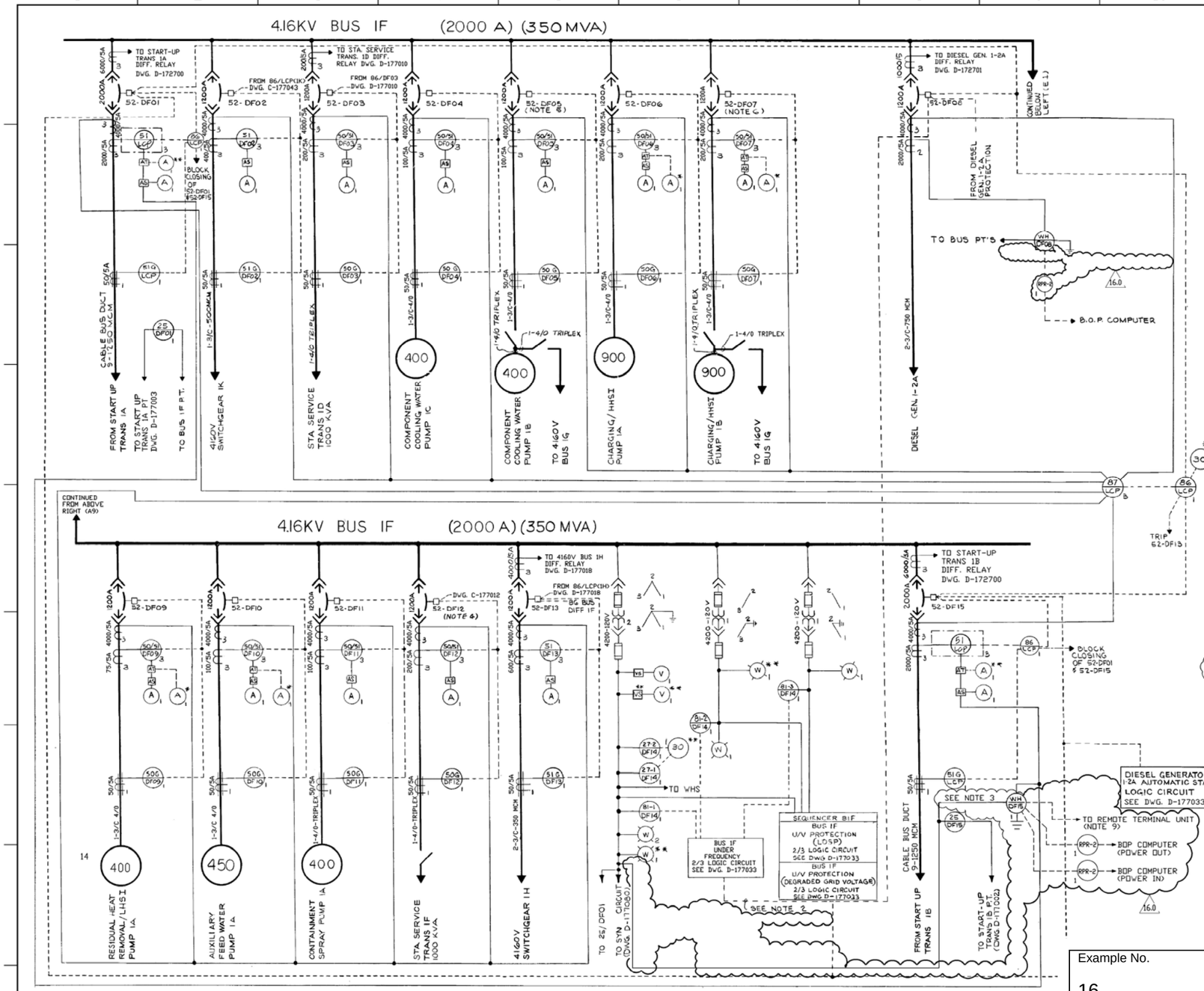

DEVICE	DESCRIPTION	MFR/TYPE	REMARKS
51 LCP	START UP TRANS 1A OVER CURRENT RELAY	GE/IAC53B	
25 SEE REMARKS	BUS 1F SYNCHRONISM CHECK RELAY	GE/IJS52A	APPLICABLE TO CELLS DF01 & DF15
51 DF02	4160V SWITCHGEAR 1K OVER CURRENT RELAY	GE/IAC53B	
50G SEE REMARKS	GROUND SENSOR RELAY	GE/PJC11AV	APPLICABLE TO CELLS DF03 TO DF07, DF09 TO DF12
50/51 DF03	STATION SERVICE TRANS 1D OVER CURRENT RELAY	GE/IAC53B	
50/51 DF04	COMP COOLING WATER PUMP 1C OVER CURRENT RELAY	GE/IAC66B	
50/51 DF05	COMP COOLING WATER PUMP 1B OVER CURRENT RELAY	GE/IAC66B	
50/51 DF06	CHARGING/HHSI PUMP, 1A OVER CURRENT RELAY	GE/IAC66B	
50/51 DF07	CHARGING/HHSI PUMP 1B OVER CURRENT RELAY	GE/IAC66B	
50/51 DF09	RHR PUMP 1A OVER CURRENT RELAY	GE/IAC66B	
50/51 DF10	AUX FEED WATER PUMP 1A OVER CURRENT RELAY	GE/IAC66B	
50/51 DF11	CTMT SPRAY PUMP 1A OVER CURRENT RELAY	GE/IAC66B	
50/51 DF12	STATION SERVICE TRANS 1F OVER CURRENT RELAY	GE/IAC53B	
51 DF13	4160V SWITCHGEAR 1H OVER CURRENT RELAY	GE/IAC53B	
86 LCP	BUS DIFFERENTIAL LOCKOUT RELAY	GE/HEA	
87 LCP	BUS 1F DIFF. PROTECTIVE RELAY	GE/PVD11C	
RPR-2	REPEATING PULSE RELAY	SOLID STATE INSTRUMENT	LOC. IN MN CONT. RM. METER AND RELAY PANEL.
27-1,2 DF14	BUS 1F UNDER VOLTAGE RELAY	GE/IAV54E	16.0
51G SEE REMARK	INVERSE TIME GROUND RELAY	GE/IAC54A	APPLICABLE TO CELLS DF02 & DF13
81-(1,2,3) DF14	BUS 1F UNDER FREQUENCY RELAY	GE/SFF201B1A	DIESEL GENERATOR 1-2A 2/3 LOGIC CIRCUIT
51 LCP	START UP TRANS 1B OVER CURRENT RELAY	GE/IAC53B	
86 LCP	START UP TRANS 1B LOCKOUT RELAY	GE/HEA	
86 LCP	START UP TRANS 1A LOCKOUT RELAY	GE/HEA	
51G LCP	VERY INVERSE TIME GROUND RELAY	GE/IAC54A	APPLICABLE TO CELLS DF01 & DF15
WH	WATT HOUR METER	JEMSTAR JS05R6010-B6-DNP	16.0

NOTES:

1. * -DENOTES MAIN CONTROL BOARD IN MAIN CONTROL ROOM.
2. BUS 1F UNDER FREQUENCY TRIP BREAKER 52-DF08 ONLY WHEN DIESEL 1-2A IS OPERATING IN PARALLEL WITH SYSTEM.
3. WH METER IS BI-DIRECTIONAL. 16.0
4. FOR KEY INTERLOCKING OF BKR. 52-DF12(SEE DWG C-177118).
5. FOR KEY INTERLOCKING OF BKR. 52-DF05(SEE DWG C-177119).
6. FOR KEY INTERLOCKING OF BKR. 52-DF07(SEE DWG C-177120).
7. LCP-DENOTES LOCAL CONTROL PANEL.
8. **-DENOTES EMERG. POWER BOARD IN MAIN CONTROL ROOM. 16.0
9. REMOTE TERMINAL UNIT IN MAIN CONTROL ROOM.

REFERENCE DRAWINGS:

D-177001 SINGLE LINE ELEC. AUX. SYSTEM (EMERGENCY 4160V & 600V).
A-177538 ELEC. GENERAL DETAILS & NOTES.

Example No.	Title	Drawing No.
16	SWGR Bus 1F One-Line Diagram	E-16-1
Normal Position	**Failed Position**	**Function State**
CLOSED	Elec: AS-IS Air: N/A	CLOSED - CLOSED

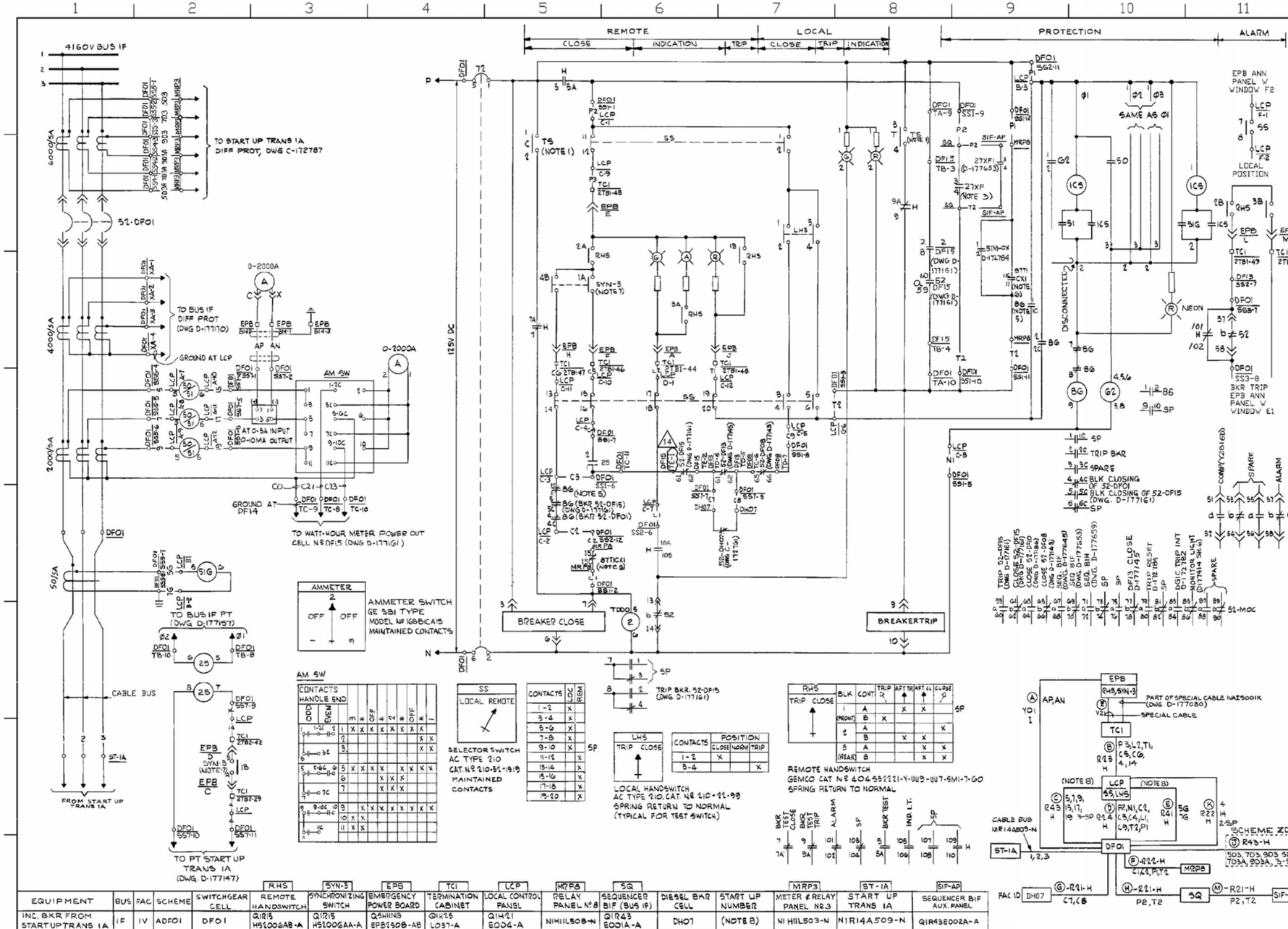

DEVICE	DESCRIPTION	MFR / TYPE	REMARKS
Z	TIME DELAY DROPOUT RELAY	GE/12HGA17A52	125V DC, 15 CY
BG	LOCKOUT RELAY	GE/12HEA61A223	125V DC
G2	TIME DELAY PICK UP RELAY	GE/12NAM11B1A	125V DC 0.03-0.2 SEC

NOTES

1. TS — TEST SWITCH
2. H — TRUCK OPERATED CELL SWITCH SHOWN FOR BREAKER IN TEST POSITION
3. 27XF CONTACT CLOSES ON BUS 1F UNDERVOLTAGE (4.75), SEE DWG D-177653
4. FOR AC RELAY DESCRIPTION, SEE DWG D-177005
5. BUS 1F DIFF PROT LOCK OUT RELAY DWG D-177170
6. START UP TRANS 1A DIFF PROT LOCK OUT RELAY TRAIN "A" FOR BKR 52-DF01, DWG. D-172784
7. FOR SYNCHRONIZING SWITCH DEVELOPMENT, SEE DWG. D-177080 (BKR 52-DF01)
8. CABLES © & (S) ARE COVERED BY START UP Nº 3, ALL OTHERS ARE UNDER START UP Nº 4.

REFERENCE DRAWINGS

D-177001 — SINGLE LINE-ELECTRICAL AUXILIARY SYSTEM (EMERG-4160V & 600V)
D-177005 — SINGLE LINE PROTECTION & METERING 4160V SWITCH GEAR, BUS 1F (EMERG)
A-177538 — ELECTRICAL GENERAL DETAILS & NOTES

EQUIPMENT	BUS	FAC	SCHEME	SWITCHGEAR CELL	RHS REMOTE HANDSWITCH	SYN-3 SYNCHRONIZING SWITCH	EPB EMERGENCY POWER BOARD	TCI TERMINATION CABINET	LCP LOCAL CONTROL PANEL	MRPB RELAY PANEL Nº 8	SQ SEQUENCER BIF (BUS 1F)	DIESEL BKR CELL	START UP NUMBER	MRP3 METER & RELAY PANEL Nº 2,3	ST-1A START UP TRANS 1A	SIF-AP SEQUENCER BIF AUX. PANEL
INC. BKR FROM STARTUPTRANS 1A	1F	1V	ADF01	DF01	Q1R15 HS1006AB-A	Q1T15 HS1006AA-A	Q5H1NG EPB125DB-AB	Q1H25 L037-A	Q1H21 E004-A	N1H11L503B-N	Q1R43 E001A-A	DH07	(NOTE 8)	N1H11L503-N	N1R14A509-N	Q1R43E002A-A

Example No.	Title	Drawing No.
16	BKR 52-DF01 Schematic Diagram	E-16-2
Normal Position	**Failed Position**	**Function State**
CLOSED	Elec: AS-IS Air: N/A	CLOSED - CLOSED

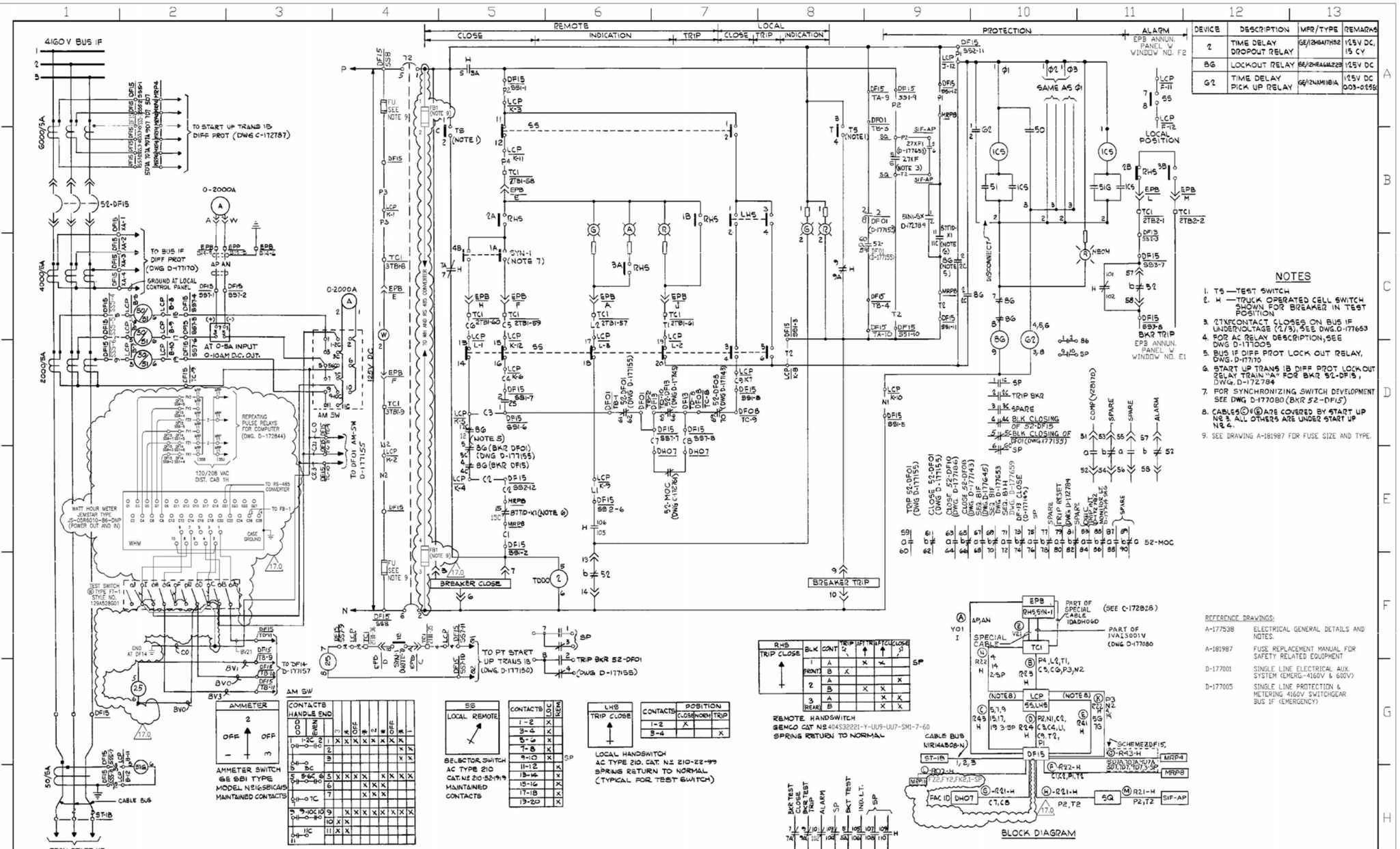

DEVICE	DESCRIPTION	MFR/TYPE	REMARKS
Z	TIME DELAY DROPOUT RELAY	GE/12HGA17H52	125V DC, 15 CY
BG	LOCKOUT RELAY	GE/12HGA66M223	125V DC
G2	TIME DELAY PICK UP RELAY	GE/12IAM11B1A	125V DC 003-0256

NOTES

1. TS — TEST SWITCH
2. H — TRUCK OPERATED CELL SWITCH SHOWN FOR BREAKER IN TEST POSITION
3. 27XF CONTACT CLOSES ON BUS 1F UNDERVOLTAGE (2/3), SEE DWG.D-177653
4. FOR AC RELAY DESCRIPTION, SEE DWG D-177005
5. BUS 1F DIFF PROT LOCK OUT RELAY, DWG. D-177170
6. START UP TRANS 1B DIFF PROT LOCK OUT RELAY TRAIN "A" FOR BKR 52-DF15, DWG. D-172784
7. FOR SYNCHRONIZING SWITCH DEVELOPMENT SEE DWG D-177080 (BKR 52-DF15)
8. CABLES Ⓒ & Ⓑ ARE COVERED BY START UP NO 3. ALL OTHERS ARE UNDER START UP NO 4.
9. SEE DRAWING A-181987 FOR FUSE SIZE AND TYPE.

REFERENCE DRAWINGS:

A-177538	ELECTRICAL GENERAL DETAILS AND NOTES.
A-181987	FUSE REPLACEMENT MANUAL FOR SAFETY RELATED EQUIPMENT
D-177001	SINGLE LINE ELECTRICAL AUX. SYSTEM (EMERG-4160V & 600V)
D-177005	SINGLE LINE PROTECTION & METERING 4160V SWITCHGEAR BUS 1F (EMERGENCY)

EQUIPMENT	BUS	FAC	SCHEME	SWITCHGEAR CELL	RHS REMOTE HANDSWITCH	SYNH SYNCHRONIZING SWITCH	EPB EMERGENCY POWER BOARD	TC1 TERMINATION CABINET	LCP LOCAL CONTROL PANEL	MRP4 METER & RELAY PANEL NO 4	SQ SEQUENCER BIF(BUS 1F)	DIESEL BREAKER CELL	START UP NUMBER	MRP8 METER & RELAY PANEL NO 8	ST-1B START-UP TRANS 1B		MRP11 METER & RELAY PANEL NO 11
INC BREAKER FROM START UP TRANS 1B	1F	1V	ADF1B	DF15	QIR15 HS2006928-A	QIR15 HS2006928-A	QIH11 NGEPD2850WB	QIH25 L037-A	QIH21 E004-A	NIH11 L504-N	QIR43 E001A-A	DHO7	(NOTE 9)	NIH11 L505-N	NIR14 A508-N		NIH11L511-11

Example No.	Title	Drawing No.
16	BKR 52-DF15 Schematic Diagram	E-16-3
Normal Position	**Failed Position**	**Function State**
CLOSED	Elec: AS-IS Air: N/A	CLOSED - CLOSED

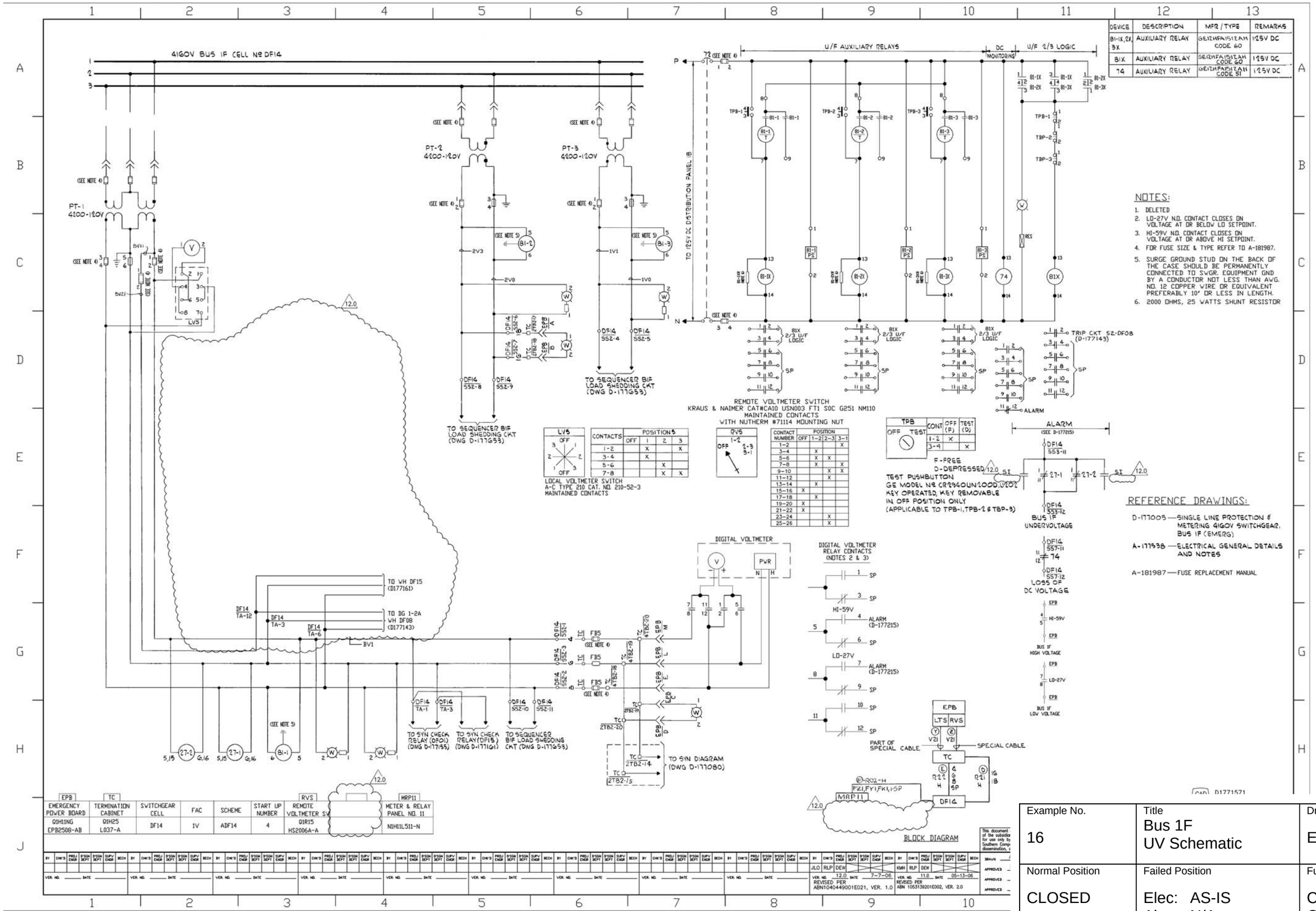

DEVICE	DESCRIPTION	MFR / TYPE	REMARKS
81-1X, 2X, 3X	AUXILIARY RELAY	GE12HFA151Z1AH CODE 60	125V DC
81X	AUXILIARY RELAY	GE12HFA151Z1AH CODE 60	125V DC
74	AUXILIARY RELAY	GE12HFA151Z1AH CODE 51	125V DC

NOTES:

1. DELETED
2. LO-27V N.O. CONTACT CLOSES ON VOLTAGE AT OR BELOW LO SETPOINT.
3. HI-59V N.O. CONTACT CLOSES ON VOLTAGE AT OR ABOVE HI SETPOINT.
4. FOR FUSE SIZE & TYPE REFER TO A-181987.
5. SURGE GROUND STUD ON THE BACK OF THE CASE SHOULD BE PERMANENTLY CONNECTED TO SWGR. EQUIPMENT GND BY A CONDUCTOR NOT LESS THAN AWG. NO. 12 COPPER WIRE OR EQUIVALENT PREFERABLY 10" OR LESS IN LENGTH.
6. 2000 OHMS, 25 WATTS SHUNT RESISTOR

REFERENCE DRAWINGS:

D-177005 — SINGLE LINE PROTECTION & METERING 4160V SWITCHGEAR, BUS 1F (EMERG)

A-177538 — ELECTRICAL GENERAL DETAILS AND NOTES

A-181987 — FUSE REPLACEMENT MANUAL

EPB	TC	SWITCHGEAR CELL	FAC	SCHEME	START UP NUMBER	RVS	MRP11
EMERGENCY POWER BOARD	TERMINATION CABINET					REMOTE VOLTMETER SW	METER & RELAY PANEL NO. 11
01H1NG EPB2508-AB	01H25 L037-A	DF14	1V	ADF14	4	01R15 HS2006A-A	N1H11L511-N

Example No.	Title	Drawing No.
16	Bus 1F UV Schematic	E-16-4
Normal Position	**Failed Position**	**Function State**
CLOSED	Elec: AS-IS Air: N/A	CLOSED - CLOSED

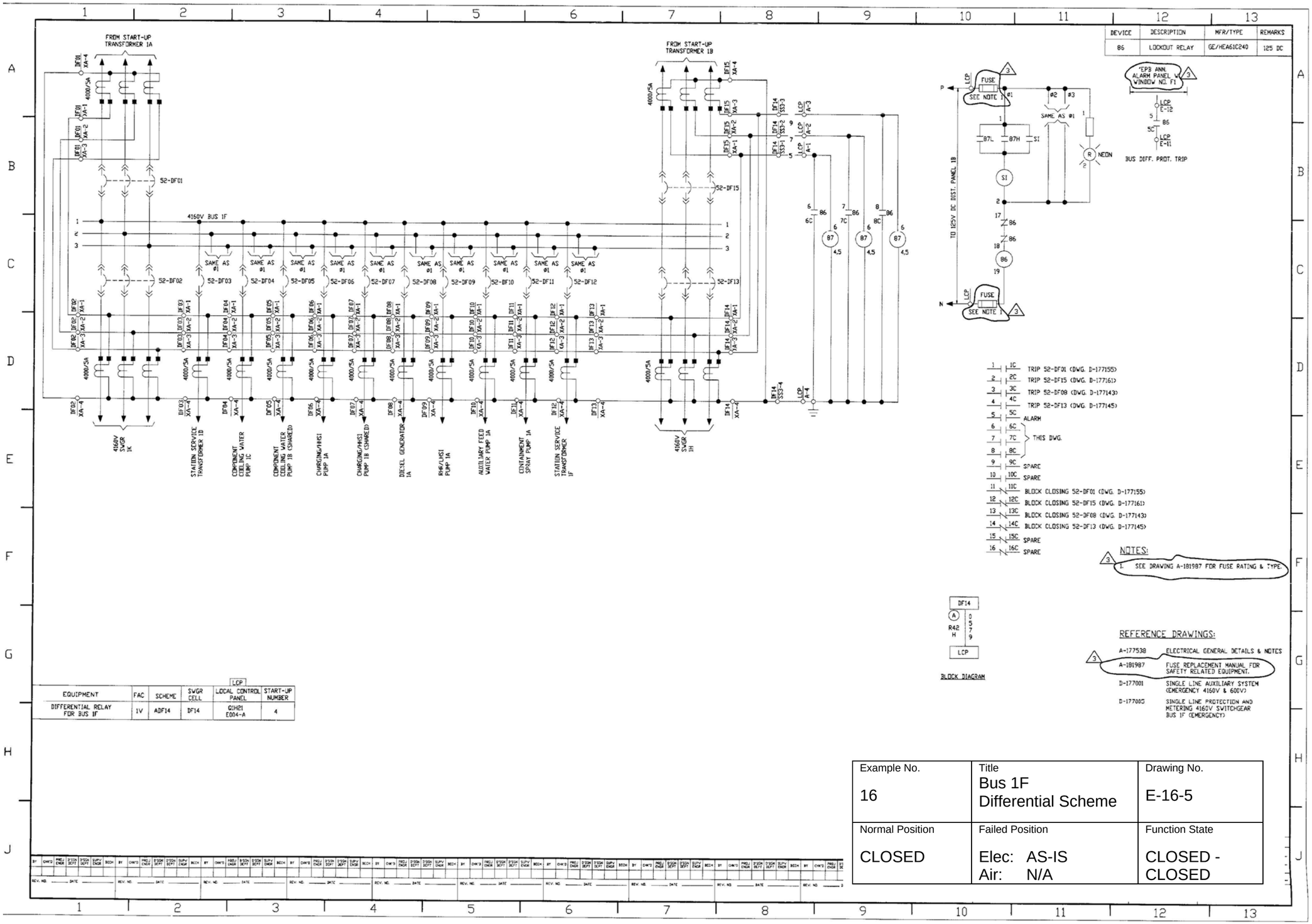

DEVICE	DESCRIPTION	MFR/TYPE	REMARKS
86	LOCKOUT RELAY	GE/HEA61C240	125 DC

NOTES:

1. SEE DRAWING A-181987 FOR FUSE RATING & TYPE.

REFERENCE DRAWINGS:

A-177538	ELECTRICAL GENERAL DETAILS & NOTES
A-181987	FUSE REPLACEMENT MANUAL FOR SAFETY RELATED EQUIPMENT.
D-177001	SINGLE LINE AUXILIARY SYSTEM (EMERGENCY 4160V & 600V)
D-177006	SINGLE LINE PROTECTION AND METERING 4160V SWITCHGEAR BUS 1F (EMERGENCY)

EQUIPMENT	FAC	SCHEME	SWGR CELL	LCP LOCAL CONTROL PANEL	START-UP NUMBER
DIFFERENTIAL RELAY FOR BUS 1F	1V	ADF14	DF14	01H21 E004-A	4

Example No.	Title	Drawing No.
16	Bus 1F Differential Scheme	E-16-5
Normal Position	**Failed Position**	**Function State**
CLOSED	Elec: AS-IS Air: N/A	CLOSED - CLOSED

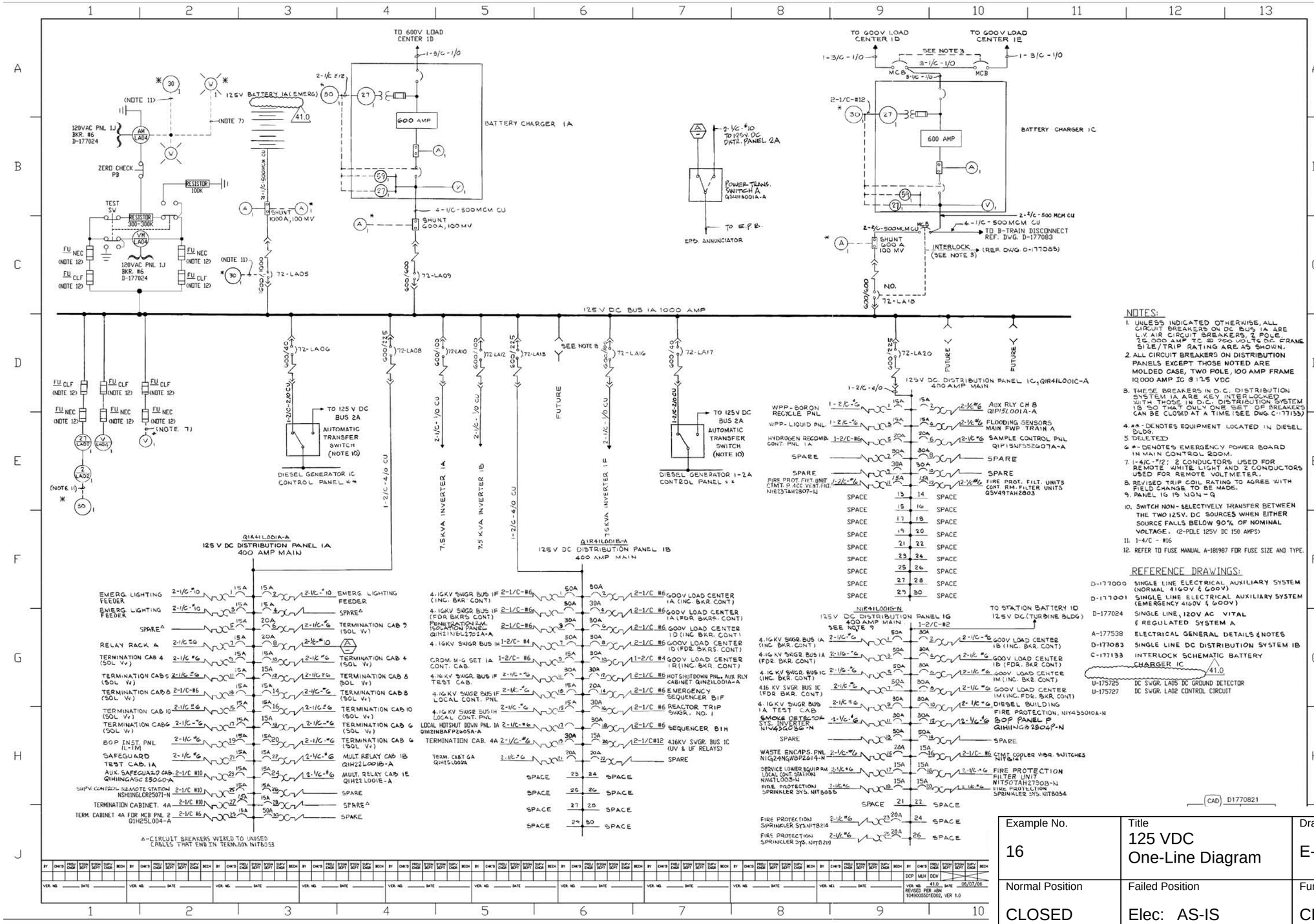

NOTES:

1. UNLESS INDICATED OTHERWISE, ALL CIRCUIT BREAKERS ON DC BUS 1A ARE L.V. AIR CIRCUIT BREAKERS, 2 POLE, 25,000 AMP IC @ 250 VOLTS DC FRAME SIZE/TRIP RATING ARE AS SHOWN.
2. ALL CIRCUIT BREAKERS ON DISTRIBUTION PANELS EXCEPT THOSE NOTED ARE MOLDED CASE, TWO POLE, 100 AMP FRAME 10,000 AMP IC @ 125 VDC
3. THESE BREAKERS IN D.C. DISTRIBUTION SYSTEM 1A ARE KEY INTERLOCKED WITH THOSE IN D.C. DISTRIBUTION SYSTEM 1B SO THAT ONLY ONE SET OF BREAKERS CAN BE CLOSED AT A TIME (SEE DWG. C-177133)
4. ** - DENOTES EQUIPMENT LOCATED IN DIESEL BLDG.
5. DELETED
6. * - DENOTES EMERGENCY POWER BOARD IN MAIN CONTROL ROOM.
7. 1-4/C-#12; 2 CONDUCTORS USED FOR REMOTE WHITE LIGHT AND 2 CONDUCTORS USED FOR REMOTE VOLTMETER.
8. REVISED TRIP COIL RATING TO AGREE WITH FIELD CHANGE TO BE MADE.
9. PANEL 1G IS NON-Q
10. SWITCH NON-SELECTIVELY TRANSFER BETWEEN THE TWO 125V. DC SOURCES WHEN EITHER SOURCE FALLS BELOW 90% OF NOMINAL VOLTAGE. (2-POLE 125V DC 150 AMPS)
11. 1-4/C - #16
12. REFER TO FUSE MANUAL A-181987 FOR FUSE SIZE AND TYPE.

REFERENCE DRAWINGS:

D-177000	SINGLE LINE ELECTRICAL AUXILIARY SYSTEM (NORMAL 4160V & 600V)
D-177001	SINGLE LINE ELECTRICAL AUXILIARY SYSTEM (EMERGENCY 4160V & 600V)
D-177024	SINGLE LINE, 120V AC VITAL & REGULATED SYSTEM A
A-177538	ELECTRICAL GENERAL DETAILS & NOTES
D-177083	SINGLE LINE DC DISTRIBUTION SYSTEM 1B
C-177133	INTERLOCK SCHEMATIC BATTERY CHARGER 1C
U-175725	DC SWGR. LA05 DC GROUND DETECTOR
U-175727	DC SWGR. LA02 CONTROL CIRCUIT

CAD D1770821

Example No.	Title	Drawing No.
16	125 VDC One-Line Diagram	E-16-6
Normal Position	**Failed Position**	**Function State**
CLOSED	Elec: AS-IS Air: N/A	CLOSED - CLOSED

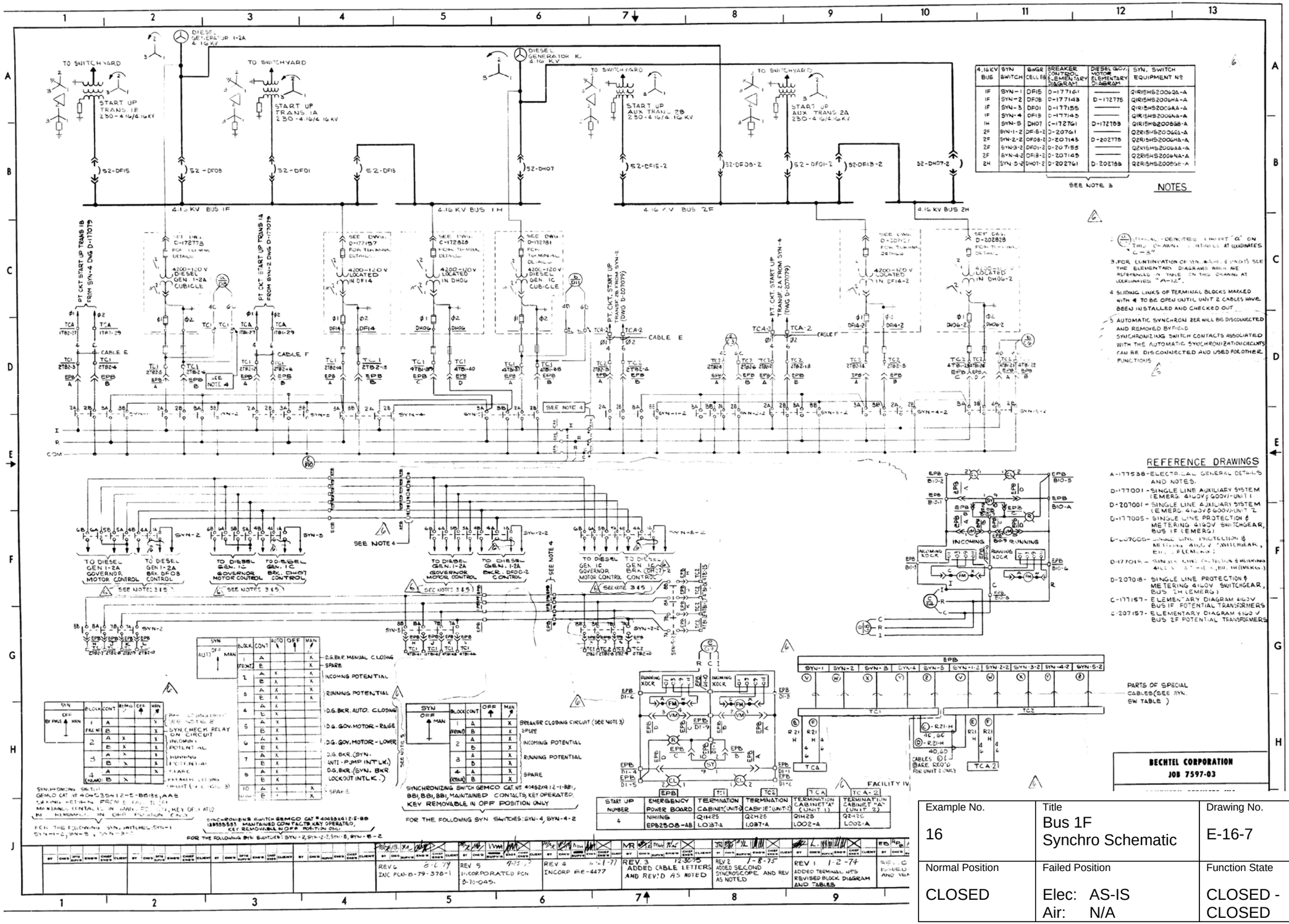

4.16 KV BUS	SYN SWITCH	GWGR CELL EB	BREAKER CONTROL ELEMENTARY DIAGRAM	DIESEL GOV. MOTOR ELEMENTARY DIAGRAM	SYN. SWITCH EQUIPMENT Nº
1F	SYN-1	DF15	D-177161	———	Q1R15HS200620-A
1F	SYN-2	DF08	D-177143	D-172775	Q1R15HS200604A-A
1F	SYN-3	DF01	D-177155	———	Q1R15HS200644A-A
1F	SYN-4	DF13	D-177145	———	Q1R15HS200604A-A
1H	SYN-5	DH07	C-172761	D-172783	Q1R15HS200688-A
2F	SYN-1-2	DF15-2	D-207161	———	Q2R15HS200620-A
2F	SYN-2-2	DF08-2	D-207143	D-202775	Q2R15HS200604A-A
2F	SYN-3-2	DF01-2	D-207155	———	Q2R15HS200644A-A
2F	SYN-4-2	DF13-2	D-207145	———	Q2R15HS200604A-A
2H	SYN-5-2	DH07-2	D-202761	D-202788	Q2R15HS200688-A

SEE NOTE 3

NOTES

2. (17) INDICATES CIRCUIT "a" ON THIS DRAWING CONTINUES AT COORDINATES "C-4".
3. FOR CONTINUATION OF SYN. SWITCHES & SYN. UNITS SEE THE ELEMENTARY DIAGRAMS WHICH ARE REFERENCED IN TABLE ON THIS DRAWING AT COORDINATES "A-12".
4. SLIDING LINKS OF TERMINAL BLOCKS MARKED WITH ✱ TO BE OPEN UNTIL UNIT 2 CABLES HAVE BEEN INSTALLED AND CHECKED OUT.
5. AUTOMATIC SYNCHRONIZER WILL BE DISCONNECTED AND REMOVED BY FIELD SYNCHRONIZING SWITCH CONTACTS ASSOCIATED WITH THE AUTOMATIC SYNCHRONIZATION CIRCUITS CAN BE DISCONNECTED AND USED FOR OTHER FUNCTIONS.

REFERENCE DRAWINGS

A-177538 - ELECTRICAL GENERAL DETAILS AND NOTES.
D-177001 - SINGLE LINE AUXILIARY SYSTEM (EMERG. 4160V & 600V) - UNIT 1
D-207001 - SINGLE LINE AUXILIARY SYSTEM (EMERG. 4160V & 600V) - UNIT 2
D-177005 - SINGLE LINE PROTECTION & METERING 4160V SWITCHGEAR, BUS 1F (EMERG.)
D-177008 - SINGLE LINE PROTECTION & METERING 4160V SWITCHGEAR, BUS 1H (EMERG.)
D-207018 - SINGLE LINE PROTECTION & METERING 4160V SWITCHGEAR, BUS 2H (EMERG.)
C-177157 - ELEMENTARY DIAGRAM 4160V BUS 1F POTENTIAL TRANSFORMERS
C-207157 - ELEMENTARY DIAGRAM 4160V BUS 2F POTENTIAL TRANSFORMERS

START UP NUMBER	EMERGENCY POWER BOARD	TERMINATION CABINET (UNIT 1)	TERMINATION CABINET (UNIT 2)	TERMINATION CABINET "A" (UNIT 1)	TERMINATION CABINET "A" (UNIT 2)
4	NIHING EPB2508-AB	Q1H25 L087-A	Q2H25 L087-A	Q1H25 L002-A	Q2-25 L002-A

Example No.	Title	Drawing No.
16	Bus 1F Synchro Schematic	E-16-7
Normal Position	**Failed Position**	**Function State**
CLOSED	Elec: AS-IS Air: N/A	CLOSED - CLOSED

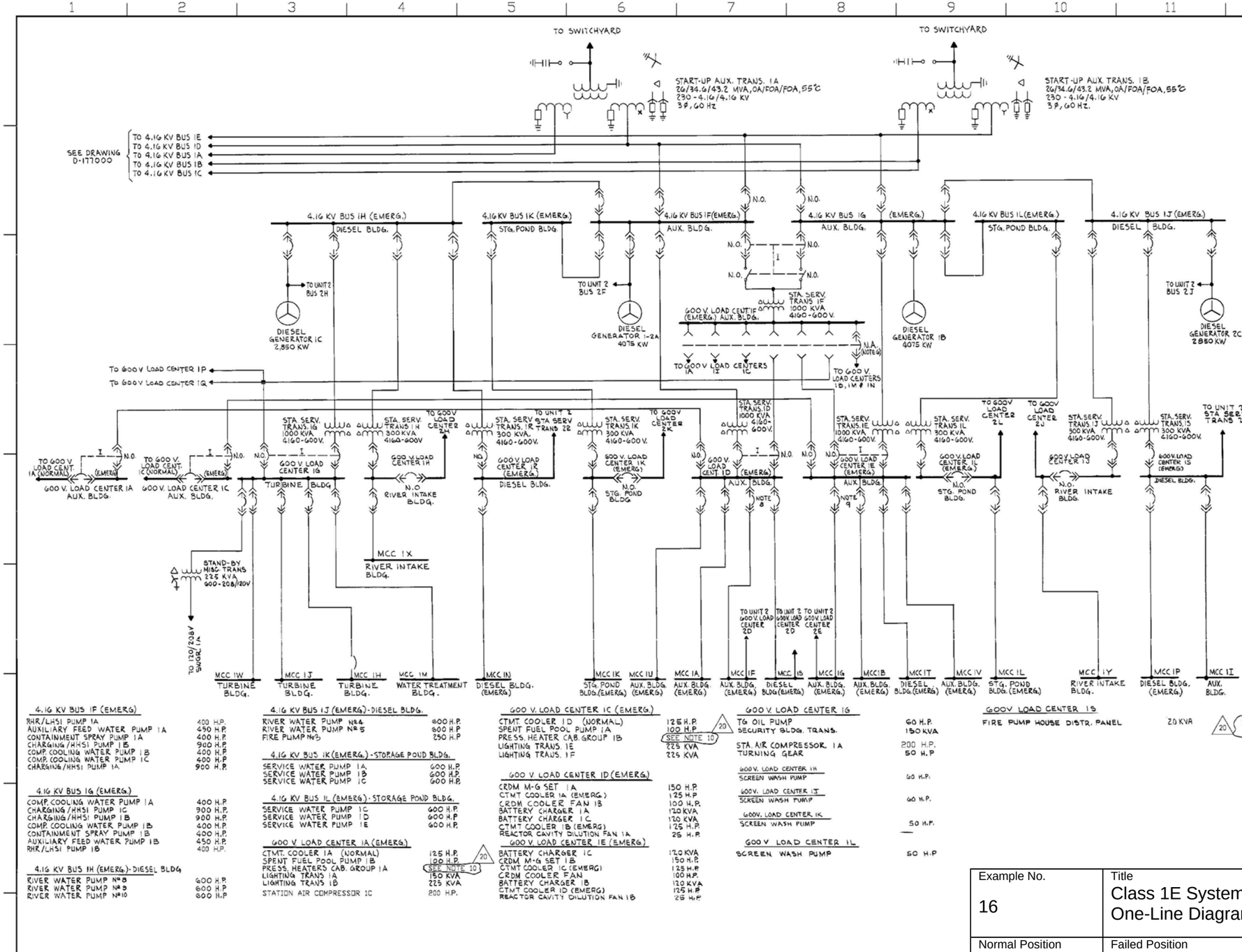

Example No.	Title	Drawing No.
16	Class 1E System One-Line Diagram	E-16-8
Normal Position	**Failed Position**	**Function State**
CLOSED	Elec: AS-IS Air: N/A	CLOSED - CLOSED