CIRCUIT ANALYSIS WORKSHEET

Component ID: HPI-B Component Type: 4.16 KV PUMP

Component Description: Example 12

Normal Position: STANDBY

Failed Electrical Position: OFF

Failed Air Position: N/A

Function State:

Initial Position: STANDBY

Desired Position ON

BE Code: HPIB FTS, HPIB-FTR

High Consequence Component Yes ☐ No ☒

Power Supplies: _____ Breaker: _____ Req'd ☐

_____ Breaker: _____ Req'd ☐

Cable Analysis:

Cable ID	Req'd ?	MHS ?	Fault Consequence	Comments

Cable ID	Req'd ?	MHS ?	Fault Consequence	Comments

Equipment Dependencies:

Comments:

Fault Mode Likelihood Analysis:

Cable ID	Insulation	Raceway	6850 Table	No. Cond	Gnd Cond	Sources	Targets	P (x)

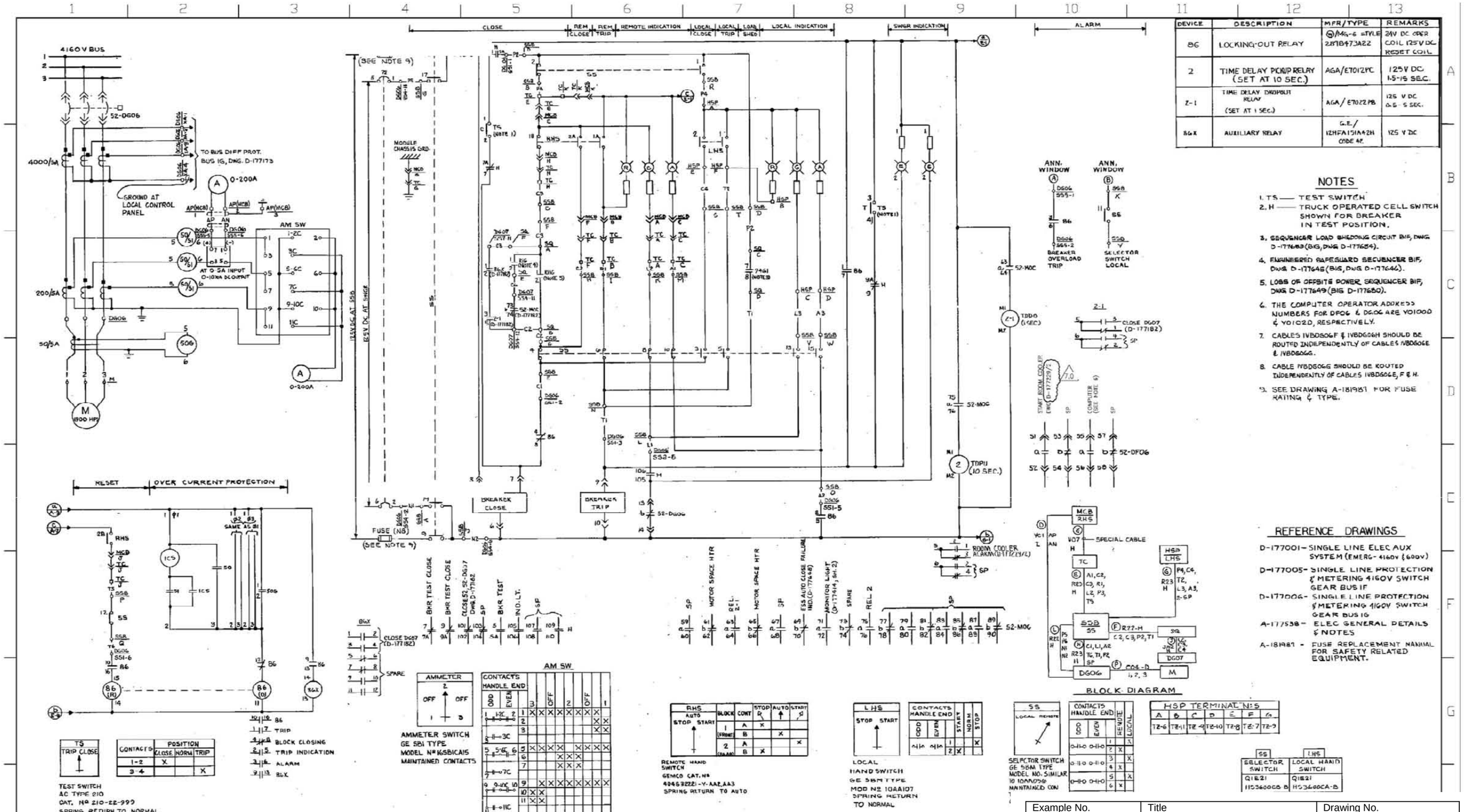

DEVICE	DESCRIPTION	MFR/TYPE	REMARKS
86	LOCKING-OUT RELAY	Ⓦ/MG-6 STYLE 2818B473A22	24V DC OPER COIL 125V DC RESET COIL
2	TIME DELAY PICKUP RELAY (SET AT 10 SEC.)	AGA/E7012PC	125V DC 1.5-15 SEC.
Z-1	TIME DELAY DROPOUT RELAY (SET AT 1 SEC.)	AGA/E7022PB	125 V DC 0.5-5 SEC.
86X	AUXILIARY RELAY	G.E./ 12HFA151A42H CODE 4F.	125 V DC

NOTES

1. TS —— TEST SWITCH
2. H —— TRUCK OPERATED CELL SWITCH SHOWN FOR BREAKER IN TEST POSITION.
3. SEQUENCER LOAD SHEDDING CIRCUIT BIF, DWG D-177683 (BIG, DWG D-177654).
4. ENGINEERED SAFEGUARD SEQUENCER BIF, DWG D-177645 (BIG, DWG D-177644).
5. LOSS OF OFFSITE POWER SEQUENCER BIF, DWG D-177649 (BIG D-177650).
6. THE COMPUTER OPERATOR ADDRESS NUMBERS FOR DF06 & DG06 ARE Y01000 & Y0102D, RESPECTIVELY.
7. CABLES IVBDS06F & IVBDG06H SHOULD BE ROUTED INDEPENDENTLY OF CABLES IVBDS06E & IVBDG06G.
8. CABLE IVBDS06G SHOULD BE ROUTED INDEPENDENTLY OF CABLES IVBDG06E, F & H.
9. SEE DRAWING A-181981 FOR FUSE RATING & TYPE.

REFERENCE DRAWINGS

D-177001 – SINGLE LINE ELEC AUX SYSTEM (EMERG- 4160V & 600V)
D-177005 – SINGLE LINE PROTECTION & METERING 4160V SWITCH GEAR BUS 1F
D-177006 – SINGLE LINE PROTECTION & METERING 4160V SWITCH GEAR BUS 1G
A-177538 – ELEC GENERAL DETAILS & NOTES
A-181981 – FUSE REPLACEMENT MANUAL FOR SAFETY RELATED EQUIPMENT.

EQUIPMENT		FAC	SCHEME	SWITCH GEAR CELL	M MOTOR	RHS REMOTE HAND SWITCH	Ⓦ DRAWING-S.S.T. ACCESS Nº	SQ SEQUENCER PANEL	MCB MAIN CONTROL BOARD	TC TERMINATION CABINET	HSP LOCAL HOT SHUTDOWN PANEL	SSB SELECTOR SWITCH BOX	START-UP NUMBER
CHARGING/HIGH HEAD SAFETY INJECTION PUMP	1C	1V	BDG06	DG06	Q1E21 M001C-B	Q1E21 115360406-B	U167954	Q1R43 E001B-B	NIMII NGMCB2500A-AB	Q1H25 L027-B	Q1H21NB AFP26058-B	Q1H21NBA FP26062-B	40

TC TERMINAL Nº	E	F	H	A	J	K	C	B
	ITB2-29	ITB2-30	ITB2-31	ITB2-32	ITB2-33	ITB2-34	ITB2-35	ITB2-36

AP(MCB) TERMINAL Nºs	1	2	3
	AP(MCB) TB1-7	AP(MCB) TB1-8	AP(MCB) TB1-9

ANN. WINDOW	Ⓐ	Ⓑ
	B1 PNL."E"	B2 PNL."E"

SSB TERMINAL Nºs	A	D	C
	TB-43	TB-23	TB-1

SSB TERMINAL Nºs	F	G	H	I	J	K	M	N	L	O	P	Q	R	S	T	V	W
	TB-32	TB-31	TB-29	TB-25	TB-45	TB-27	TB-24	TB-34	TB-46	TB-47	TB-25	TB-48	TB-35	TB-37	TB-36	TB-16	TB-1

Example No.	Title	Drawing No.
12	HPI-B Elementary Diagram	E-12-1
Normal Position	**Failed Position**	**Function State**
STANDBY / ON	Elec: OFF Air: N/A	STANDBY - ON

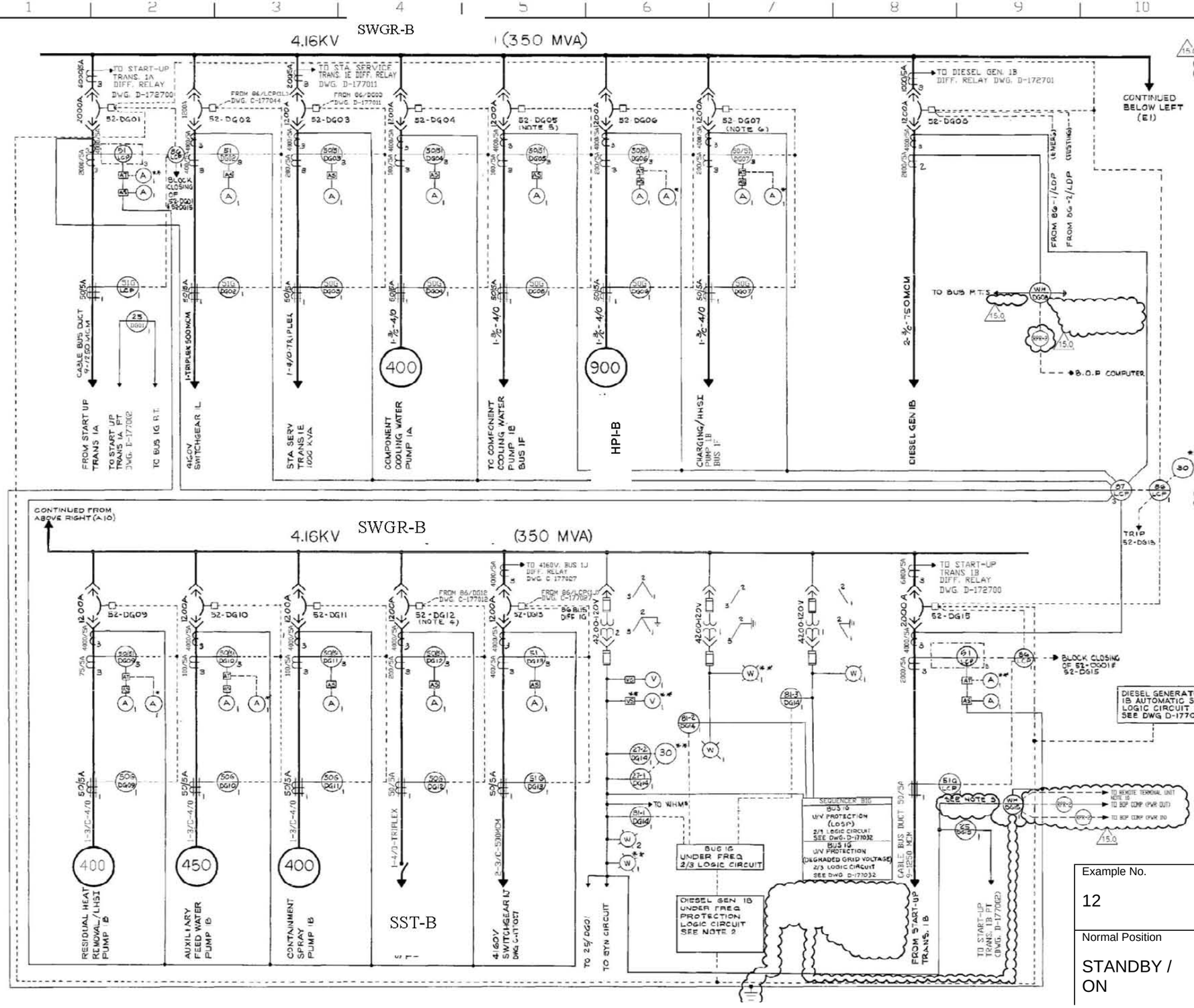

DEVICE	DESCRIPTION	MFR/TYPE	REMARKS
51 LCP	START UP TRANS 1A OVER CURRENT RELAY	GE/IAC53B	
WH DG08	DIESEL GEN 1B WATT HOUR METER	JEMSTAR JS05R6010 -B6-DNP	
25 SEE REMARKS	BUS 1G SYNCHRONISM CHECK RELAY	GE/IJS52A	APPLICABLE TO CELLS DG01 & DG15
51 DG02	4160V SWITCHGEAR 1L OVER CURRENT RELAY	GE/IAC53B	
50G SEE REMARKS	GROUND SENSOR RELAY	GE/PJC11AV	APPLICABLE TO CELLS DG03 TO DG07, DG09 TO DG12
50/51 DG03	STA SERV TRANS 1E OVER CURRENT RELAY	GE/IAC53B	
50/51 DG04	COMP COOLING WATER PUMP 1A OVER CURRENT RELAY	GE/IAC66B	
50/51 DG05	COMP COOLING WATER PUMP 1B OVER CURRENT RELAY	GE/IAC66B	
50/51 DG06	CHARGING/HHSI PUMP 1C OVER CURRENT RELAY	GE/IAC66B	
50/51 DG07	CHARGING/HHSI PUMP 1B OVER CURRENT RELAY	GE/IAC66B	
51G SEE REMARKS	VERY INVERSE TIME GROUND RELAY	GE/IAC54A	APPLICABLE TO CELLS DG02 & DG16
50/51 DG09	RHR/LHSI PUMP 1A OVER CURRENT RELAY	GE/IAC66B	
50/51 DG10	AUX FEED WATER PUMP 1B OVER CURRENT RELAY	GE/IAC66B	
50/51 DG11	CTMT SPRAY PUMP 1B OVER CURRENT RELAY	GE/IAC66B	
50/51 DG12	STA SERV TRANS 1F OVER CURRENT RELAY	GE/IAC53B	
51 DG13	4160V SWITCHGEAR 1J OVER CURRENT RELAY	GE/IAC53B	
86 LCP	BUS DIFFERENTIAL LOCKOUT RELAY	GE/HEA	
87 LCP	BUS 1G DIFF. PROTECTIVE RELAY	GE/PVD11C	
RPR-2	REPEATING PULSE RELAY	SOLID STATE INSTRUMENT	LOC IN MAN. CONT. BOARD METER & RELAY PNL.
27-1,2 DG14	BUS 1G UNDER VOLTAGE RELAY	GE/IAV54E	
WH DG15	START-UP TRANS 1B WATT HOUR METER	JEMSTAR JS05R6010 -B6-DNP	
81-(1,2,3) DG14	BUS 1G UNDER FREQUENCY RELAY	GE/SFF201B1A	DIESEL GENERATOR 1B 2/3 LOGIC CIRCUIT
51 LCP	START UP TRANS 1B OVER CURRENT RELAY	GE/IAC53B	
86 LCP	START UP TRANS 1B LOCKOUT RELAY	GE/HEA	
86 LCP	START UP TRANS 1A LOCKOUT RELAY	GE/HEA	
51G LCP	VERY INVERSE TIME GROUND RELAY	GE/IAC54A	APPLICABLE TO CELLS DG01 & DG15

NOTES:

1. * - DENOTES MAIN CONTROL BOARD IN MAIN CONTROL ROOM.
2. DIESEL GENERATOR UNDER FREQUENCY PROTECTION FUNCTIONS ONLY WHEN DIESEL 1B IS OPERATING IN PARALLEL WITH SYSTEM.
3. WH METER IS BI-DIRECTIONAL.
4. FOR KEY INTERLOCKING OF BKR. 52-DG01 (SEE DWG. C-177118)
5. FOR KEY INTERLOCKING OF BKR. 52-DG05 (SEE DWG. C-177119)
6. FOR KEY INTERLOCKING OF BKR. 52-DG07 (SEE DWG. C-177120)
7. LCP - DENOTES LOCAL CONTROL PANEL.
8. ** - DENOTES EMERG. POWER BOARD IN MAIN CONTROL ROOM.
9. LDP - DENOTES LOCAL DIESEL PANEL.
10. REMOTE TERMINAL UNIT IN MAIN CONTROL ROOM.

Example No.	Title	Drawing No.
12	SWGR-B One-Line Diagram	E-12-2
Normal Position	**Failed Position**	**Function State**
STANDBY / ON	Elec: OFF Air: N/A	STANDBY - ON