CIRCUIT ANALYSIS WORKSHEET

Component ID: MOV-8888 Component Type: MOV

Component Description: Example 3

Normal Position: OPEN

Failed Electrical Position: AS-IS

Failed Air Position: N/A

Function State:

Initial Position: OPEN

Desired Position OPEN

BE Code: 8888-FTRO

High Consequence Component Yes ☐ No ☒

Power Supplies: _____ Breaker: _____ Req'd ☐

_____ Breaker: _____ Req'd ☐

Cable Analysis:

Cable ID	Req'd ?	MHS ?	Fault Consequence	Comments

Cable ID	Req'd ?	MHS ?	Fault Consequence	Comments

Equipment Dependencies:

Comments:

Fault Mode Likelihood Analysis:

Cable ID	Insulation	Raceway	6850 Table	No. Cond	Gnd Cond	Sources	Targets	P (x)

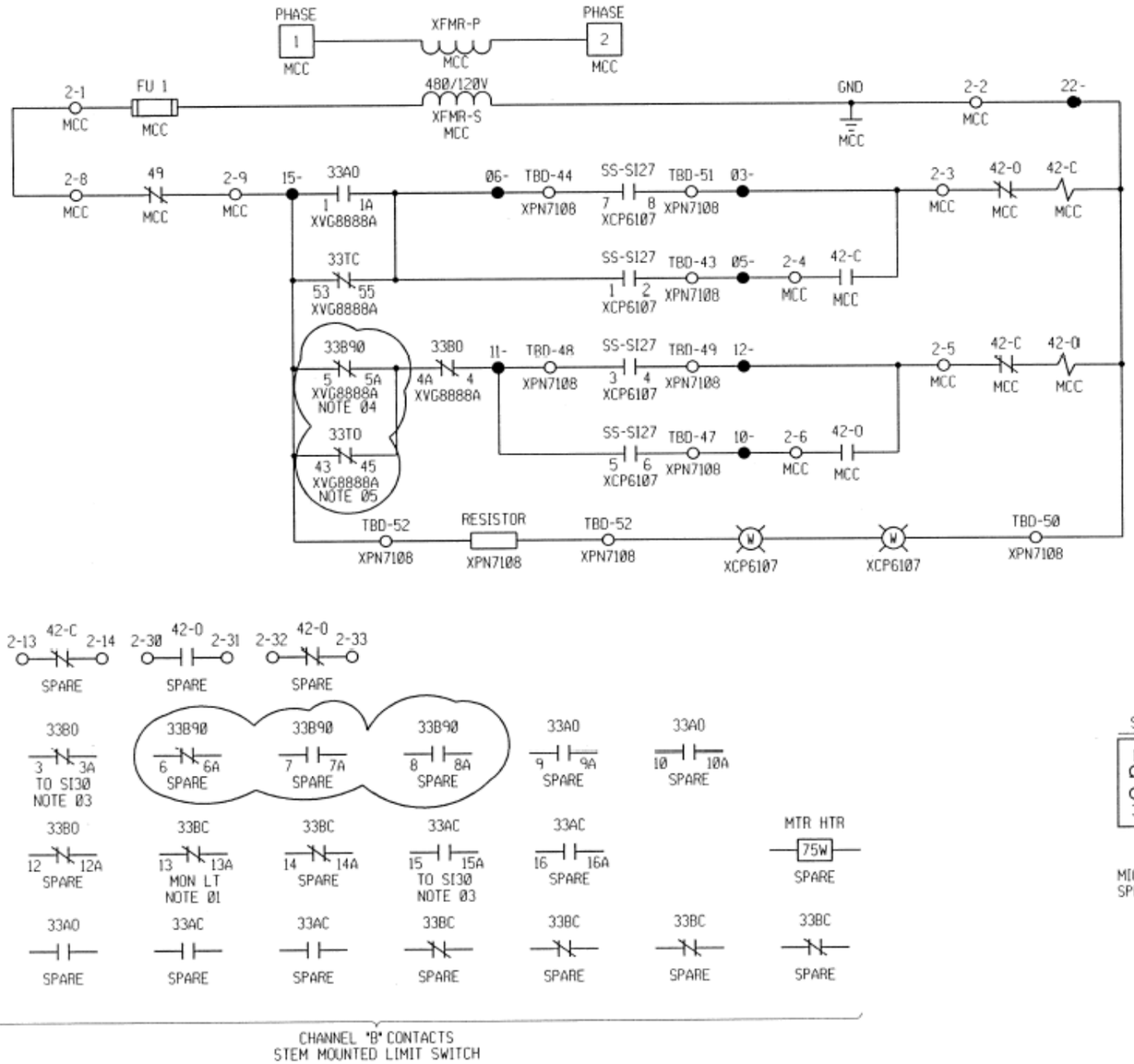

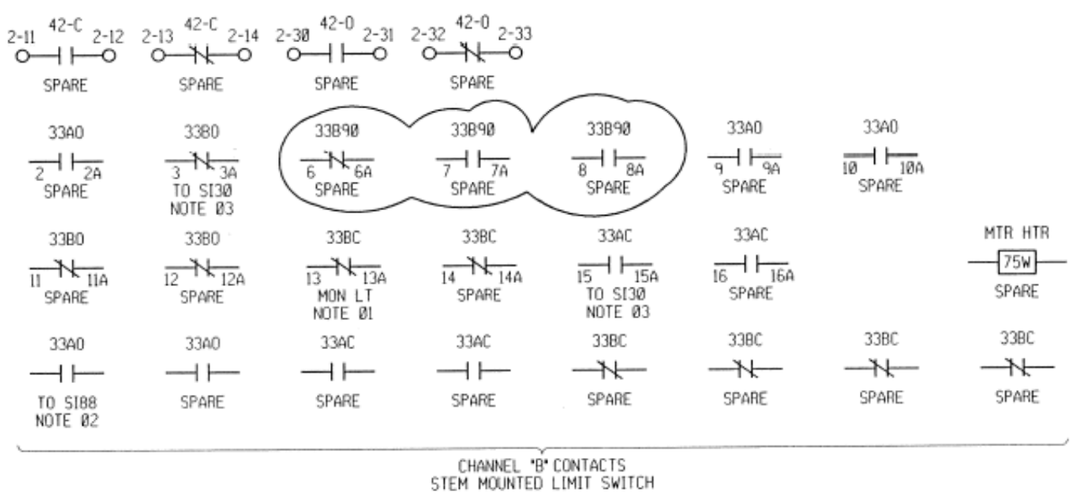

COMPONENT RELATED NOTES

01. TO ESF MONITOR LIGHTS, SEE B-208-066, SHT. MI09
02. TO REDUNDANT LIGHT, SEE B-208-095, SHT. SI88
03. TO NORMAL INDICATING LIGHTS ON POWER LOCKOUT, SEE B-208-095, SHT. SI30
04. SET 90% (+5% / -0%) OPEN
05. SET AT 1

GENERAL DRAWING NOTES

A. REFERENCE WESTINGHOUSE DWG 271C622 SHT. 398, (IMS-41-012-398)
B. DEVICES INDICATED IN "MCC" ARE LOCATED IN XMC1DA2Y UNIT #130G; POWER SUPPLIED VIA UNIT 13AC
C. FOR LIMIT SWITCH DEVELOPMENT, SEE B-208-002, SHT. 01

THE LAST WIRE MARK NUMBER 22

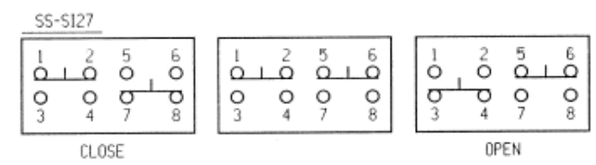

MICROSWITCH CMC #910-PGD-53-3, PTCC
SPRING RETURN OPEN AND CLOSE TO NORMAL

CHANNEL A
NUCLEAR SAFETY RELATED

DRAWING LEGIBILITY CLASS 1

Example No.	Title	Drawing No.
3	MOV-8888 Elementary Diagram	E-3-1
Normal Position	**Failed Position**	**Function State**
OPEN	Elec: AS-IS Air: N/A	OPEN - OPEN

LEGEND:
A - CIRCUIT NO.
B - NO.COND.& WIRE SIZE
C - VOLTS
D - B/M ITEM
E - CONDUIT SIZE
F - NATURE OF CIRCUIT
G - WIRE MARKS

NUCLEAR SAFETY RELATED

Example No.	Title	Drawing No.
3	MOV-8888 Block Diagram	E-3-2
Normal Position	**Failed Position**	**Function State**
OPEN	Elec: AS-IS Air: N/A	OPEN - OPEN

CHANNEL A

REFERENCE:- GAI B-208-095 SH. SI27 REV. 9 VENDOR

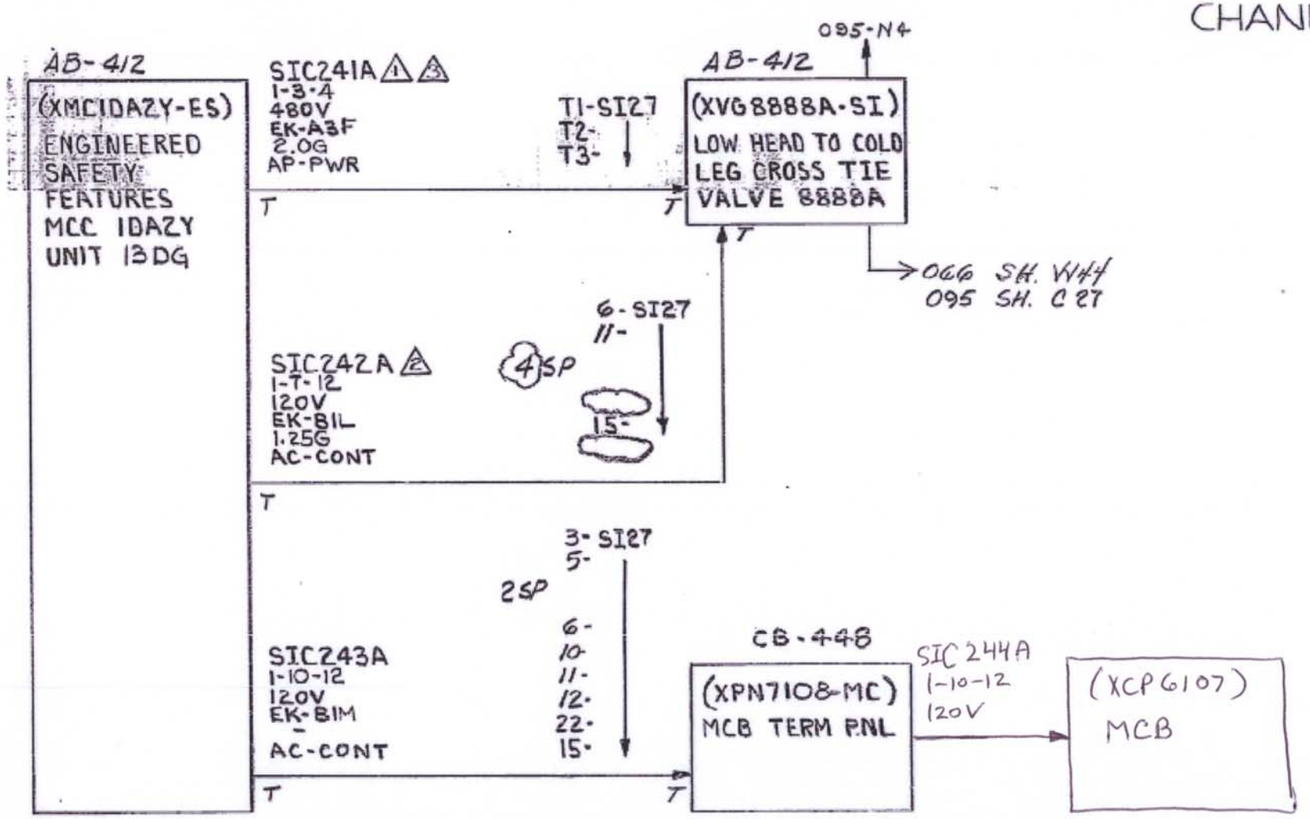

△1 VIA PB-SI6, PB-SI5 & PB-SI4, PB-SI48
△2 VIA PB-SI10, PB-SI9 & PB-SI8, PB-SI49, XX-3485A, 3486A, 3487A, 3488A & 3489A
△3 TYPING NOTE 2 (SS-200-105) Q#8

BLANK CIRCUITS - SIC244 THRU SIC250
NEXT CIRCUIT - SIC251