NOTES:

1. BREAKERS SHOWN IN THE 'OPEN' POSITION
2. COILS SHOWN IN THE 'DE-ENERGIZED' STATE.
3. PRESSURE SWITCHES, FLOW SWITCHES, ETC. SHOWN IN THE 'OFF-SHELF' POSITION.
4. THE COMPLETE WIRE MARK IS THE WIRE MARK SHOWN PLUS THE SYSTEM SHEET NUMBER (e.g. 1-ES09, 2-ES09, ETC.)
5. VALVES SHOWN IN THE 'CLOSED' POSITION (EXCEPT AS NOTED).
6. GAI-ERAC NO.'S WILL BE USED TO IDENTIFY EQUIPMENT LOCATION WHERE APPLICABLE. SEE EQUIPMENT LIST FOR GAI-ERAC DESIGNATION
7. ALL AUX. RELAYS WILL BE 'CUTLER-HAMMER' TYPE M-600V AS SHOWN ON B-208-002 SHT. 19. EXCEPT AS NOTED ON ELEM. DIAGRAM'S
8. DROPPING RESISTORS FOR 'CMC' LIGHT MODULES ON MCB SHALL BE AS FOLLOWS:
   a) 125VDC CIRCUITS - 1950 OHMS FOR SINGLE LAMP; 1600 OHMS FOR TWO LAMPS IN SERIES
   b) 120VAC CIRCUITS - 1750 OHMS FOR SINGLE LAMP; 1400 OHMS FOR TWO LAMPS IN SERIES
9. INSTRUMENTATION SETPOINTS SHOWN ON THIS SERIES DRAWINGS ARE FOR INFORMATION ONLY. THE SETPOINT DATABASE/LIST SHALL BE CHECKED TO VERIFY INSTRUMENT SETPOINTS LISTED ON THESE DRAWINGS.

ABBREVIATIONS

ABBREVIATIONS	DEFINITIONS
AL	ALARM
BLU	BLUE
B.O.	BLACK OUT
COMPT	COMPUTER
CONT	CONTROL
DFTD	DEFEATED
GRN	GREEN
INTERLK	INTERLOCK
MON AL 2	MONITOR LIGHT ALARM GROUP 2
MON LT 2	MONITOR LIGHT GROUP 2
REM	REMOTE
T.C.	TORQUE SWITCH TO STOP VALVE CLOSING
T.O.	TORQUE SWITCH TO STOP VALVE OPENING
WH	WESTINGHOUSE
WHT	WHITE
YEL	YELLOW

LIMIT SWITCH DEVELOPMENT - ROTORK OPERATOR

SWITCH	CONTACT	OPEN	INTERMEDIATE	CLOSED
OT/LS	24-25		———	———
CT/LS	26-27	———	———	
OAS1	15-16	———		
CAS1	6-7			———
OAS2	17-18		———	———
CAS2	8-9	———	———	

ADD-ON-PAK 1 SWITCH OPERATION

SWITCH	CONTACT	OPEN	INTERMEDIATE	CLOSED
IAS1	10-11	———	———	
IAS2	12-13	———	———	
IAS3	19-20		———	———
IAS4	21-22		———	———
IAS5	28-29		———	———
IAS6	30-31	———	———	

ADD-ON-PAK SWITCHES CAN BE SET AT VALVE FULL OPEN, FULL CLOSED, OR ANY POSITION IN BETWEEN

DEVICE IDENTIFICATION (COMPUTER DRAWINGS)

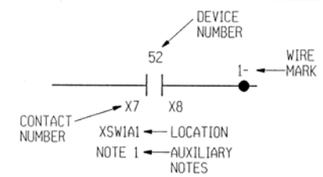

LIMIT SWITCH DEVELOPMENT - LIMITORQUE OPER.

ROTOR	POSITION SWITCH	CONT	VALVE POSITION: FULL CLOSE		FULL OPEN
1	33AO	1			———
	33AO	2			———
	33BO	3	———	———	
	33BO	4	———	———	
2	33BC	5	———		
	33BC	6	———		
	33AC	7		———	———
	33AC	8		———	———
3	33AO	9			———
	33AO	10			———
	33BO	11	———	———	
	33BO	12	———	———	
4	33BC	13	———		
	33BC	14	———		
	33AC	15		———	———
	33AC	16		———	———

17 CLOSING TORQUE SWITCH INTERRUPTS CONTROL CIRCUIT IF MECHANICAL OVERLOAD OCCURS DURING CLOSING CYCLE OR FULLY CLOSED VALVE

18 OPENING TORQUE SWITCH INTERRUPTS CONTROL CIRCUIT IF MECHANICAL OVERLOAD OCCURS DURING OPENING CYCLE OR FULLY OPENED VALVE

LIMIT SWITCH DEVELOPMENT FOR AIR OPERATED VALVES AND DAMPERS

	LIMIT SWITCH	DEVICE POSITION: FULL CLOSE		FULL OPEN
SWITCH ACTUATED DEVICE CLOSED	33bc	———		
	33bc	———		
	33ac		———	———
	33ac		———	———
SWITCH ACTUATED DEVICE OPEN	33ao			———
	33ao			———
	33bo	———	———	
	33bo	———	———	

NOTE: 33 CONTACTS SHOWN FOR DEVICE FULL CLOSED

NOTES: LIMIT SWITCH DEVELOPMENT- LIMITORQUE OPER.

1. INTERMEDIATE POSITIONS ARE EXPRESSED IN PERCENTAGE OF FULL OPEN. EX. 33A05 CONTACT ACTUATES WHEN THE VALVE IS 5% OPEN.
2. THE TOLERANCE FOR ROTOR 2 CONTACTS SET AT 25% OPEN IS ± 2.5%.
3. LIMITORQUE VALVES STROKED OPEN TO A POSITION OF ≥90% ARE CONSIDERED 'FULLY OPEN' WITH THE EXCEPTION OF XVG2802A & B-MS, WHICH MUST BE STROKED OPEN TO 95%. THE BASIS FOR THIS STATEMENT IS NUCLEAR ENGINEERING LETTER CGSS-20371, DATED 11/9/87.

LEGEND (FOR COMPUTER GENERATED DRAWINGS)

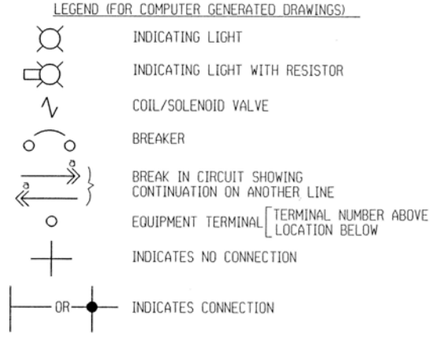

ESSENTIAL

DRAWING LEGIBILITY

Basics 13

Valve Limit Switch Legend

208002_xx_0001