D-177132

DEVICE	DESCRIPTION	MFR/TYPE	REMARKS
49X	AUXILIARY RELAY	ITE-ROWAN/ 2190-E01AA	120V AC

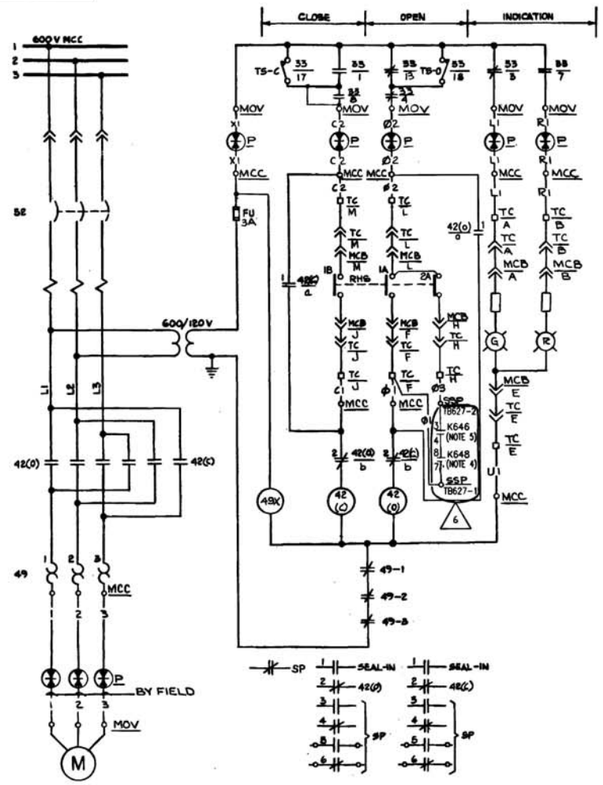

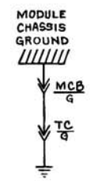

RHS AUTO CLOSE ↑ OPEN	BLK	CONT	CLOSE ↓	AUTO ↑	OPEN ↑
	1ST BLOCK FROM HAND BLOCK	A			X
		B	X		
	2ND BLOCK	A		X	

HAND SWITCH
GEMCO CAT NO 404BS2121-Y-AA3.A4
SPRING RETURN TO AUTO

33

LIMIT SWITCH CONTACT DEVELOPMENT				
CONT	VALVE POSITION FULLY OPEN		FULLY CLOSED	FUNCTION
1				BYPASS CKT
2				SPARE
3				SIL
4				OPEN LIMIT
5				SPARE
6				SPARE
7				SIL
8				CLOSE LIMIT
9				MCB ALARM
10				SPARE
11				SPARE
12				SPARE
13				BYPASS CKT.
14				SPARE
15				SPARE
16				SPARE

(A-177100 SH. 129A)

CONTACT CLOSED

17 CLOSING TORQUE SWITCH INTERRUPTS CONTROL CIRCUIT IF MECHANICAL OVERLOAD OCCURS DURING CLOSING CYCLE

18 OPENING TORQUE SWITCH INTERRUPTS CONTROL CIRCUIT IF MECHANICAL OVERLOAD OCCURS DURING OPENING CYCLE

NOTES

1. VALVE IS SHOWN IN FULLY CLOSED POSITION
2. FOR MOTOR AND STARTER SIZE SEE DWG. B-177554, SHEET 19.
3. ⊕ DENOTES A PENETRATION IN THE MOV ENCLOSURE, PENETRATION MFGR. TO PROVIDE LEADS ON MOV SIDE WHICH ARE TO BE CONNECTED TO MOV AND LIMIT SWITCH BY FIELD.
4. KG48 CONTACT CLOSES ON SAFETY INJECTION & REMAINS CLOSED UNTIL MANUALLY RESET FROM CONTROL BOARD (SEPARATE RESET SWITCH)
5. KG46 CONTACT CLOSES ON RWST LO-LO LEVEL SIGNAL
6. THE FOLLOWING CONTROL CABLES IVAFU-R4D, E, F & Y ARE TO BE PHYSICALLY SEPARATED FROM CABLES IVAFU-V5A, B, C & Z (SEE D-177773) IN ORDER TO ASSURE THAT A COMMON MODE EVENT CANNOT CAUSE GENERATION OF A SIGNAL WHICH WOULD OPEN BOTH VALVES IN THE TRAIN A SUMP LINE AT THE WRONG TIME.

REFERENCE DRAWINGS

A-177558 – ELECTRICAL GENERAL DETAILS & NOTES.

SERVICE	FAC	SCHEME	MCC CUBICLE	VALVE	START UP NUMBER	MAIN CONTROL BOARD	TERMINATION CABINET	REMOTE HAND SWITCH	DRAWING-SYS-1ACC669 NO	LIMIT SWITCH	PENETRATION	TC TERMINAL NUMBER F	L	J	M	E	A	B	H	SOLID STATE PROTECTION CABT
			MCC	MOV		MCB	TC	RHS		33	P									SSP
CONTAINMENT SUMP TO RHR PUMP 1A ISOLATION	IV	AFU-R4	FU-R4	QIE11MOV881A-A	52	NHI11MG MCB2500A-AB	QIH251L006-A	NIE11HS881A-A	U170079	NIE11ES881A-A	QRT52B051-A	1TB1-24	1TB1-25	1TB1-26	1TB1-27	1TB1-28	1TB1-29	1TB1-30	1TB1-37	QIH11NGSSPCSOGM-A

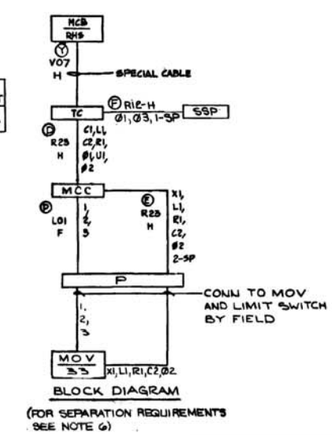

BLOCK DIAGRAM

(FOR SEPARATION REQUIREMENTS SEE NOTE 6)

Basics 11

MOV Schematic
(with embedded Block Diagram

REDRAWN-REVISION PER ABN 95-0-0599, REV. 0