CIRCUIT ANALYSIS WORKSHEET

Component ID: FCV-605A Component Type: AOV

Component Description: Example 17

Normal Position: CLOSED

Failed Electrical Position: CLOSED

Failed Air Position: CLOSED

Function State:

Initial Position: CLOSED

Desired Position MODULATE

BE Code: FCV605A-FTM

High Consequence Component Yes ☐ No ☒

Power Supplies: _____ Breaker: _____ Req'd ☐

_____ Breaker: _____ Req'd ☐

Cable Analysis:

Cable ID	Req'd ?	MHS ?	Fault Consequence	Comments

Cable ID	Req'd ?	MHS ?	Fault Consequence	Comments

Equipment Dependencies:

Comments:

Fault Mode Likelihood Analysis:

Cable ID	Insulation	Raceway	6850 Table	No. Cond	Gnd Cond	Sources	Targets	P (x)

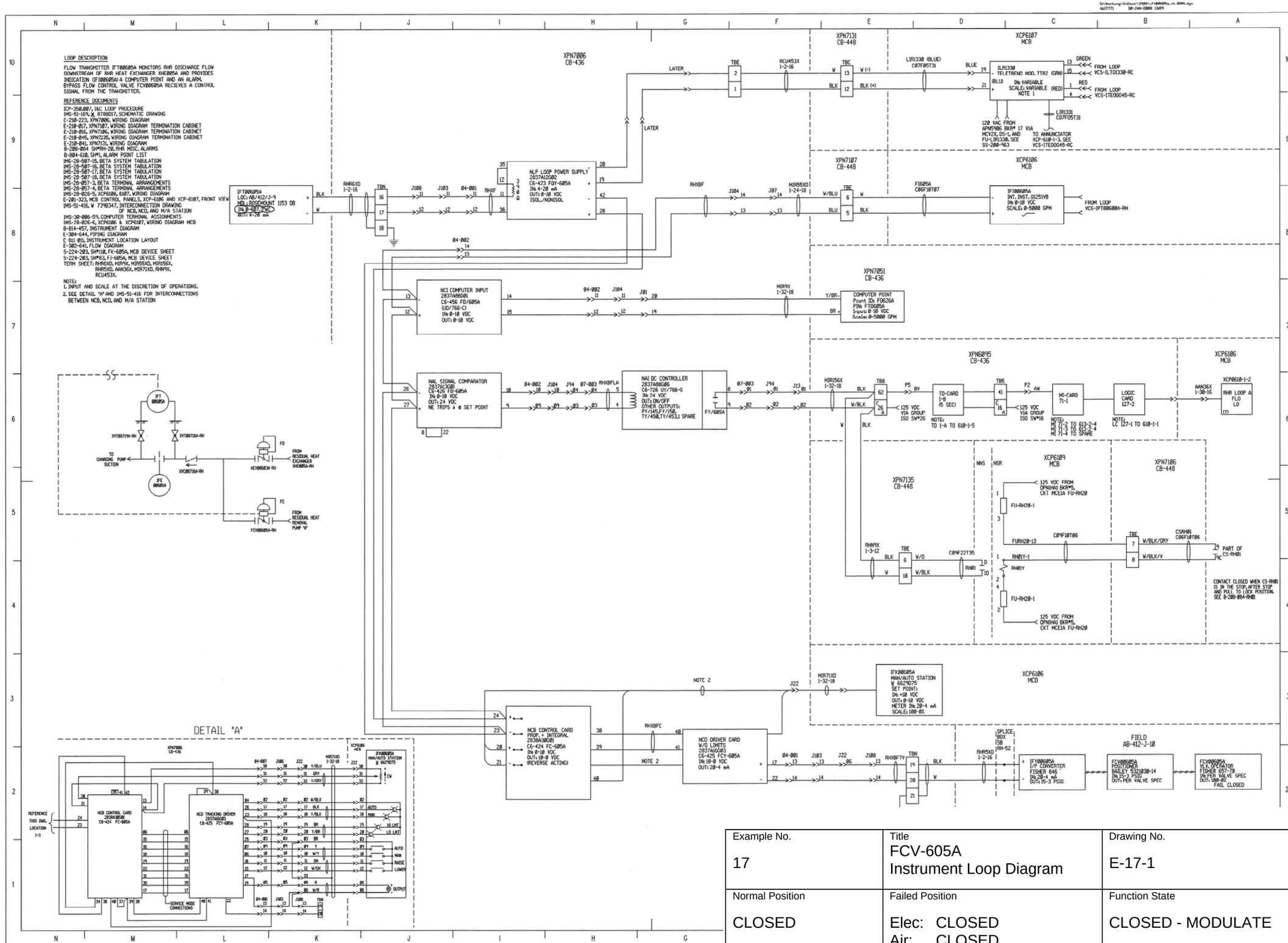

Example No.	Title	Drawing No.
17	FCV-605A Instrument Loop Diagram	E-17-1
Normal Position	**Failed Position**	**Function State**
CLOSED	Elec: CLOSED Air: CLOSED	CLOSED - MODULATE