CIRCUIT ANALYSIS WORKSHEET

Component ID: MOV-15 Component Type: MOV

Component Description: Example 6b

Normal Position: CLOSED

Failed Electrical Position: AS-IS

Failed Air Position: N/A

Function State:

Initial Position: CLOSED

Desired Position THROTTLED – Local Control

BE Code: 15-FTO

High Consequence Component Yes ☐ No ☒

Power Supplies: _____ Breaker: _____ Req'd ☐

_____ Breaker: _____ Req'd ☐

Cable Analysis:

Cable ID	Req'd ?	MHS ?	Fault Consequence	Comments

Cable ID	Req'd ?	MHS ?	Fault Consequence	Comments

Equipment Dependencies:

Comments:

Fault Mode Likelihood Analysis:

Cable ID	Insulation	Raceway	6850 Table	No. Cond	Gnd Cond	Sources	Targets	P (x)

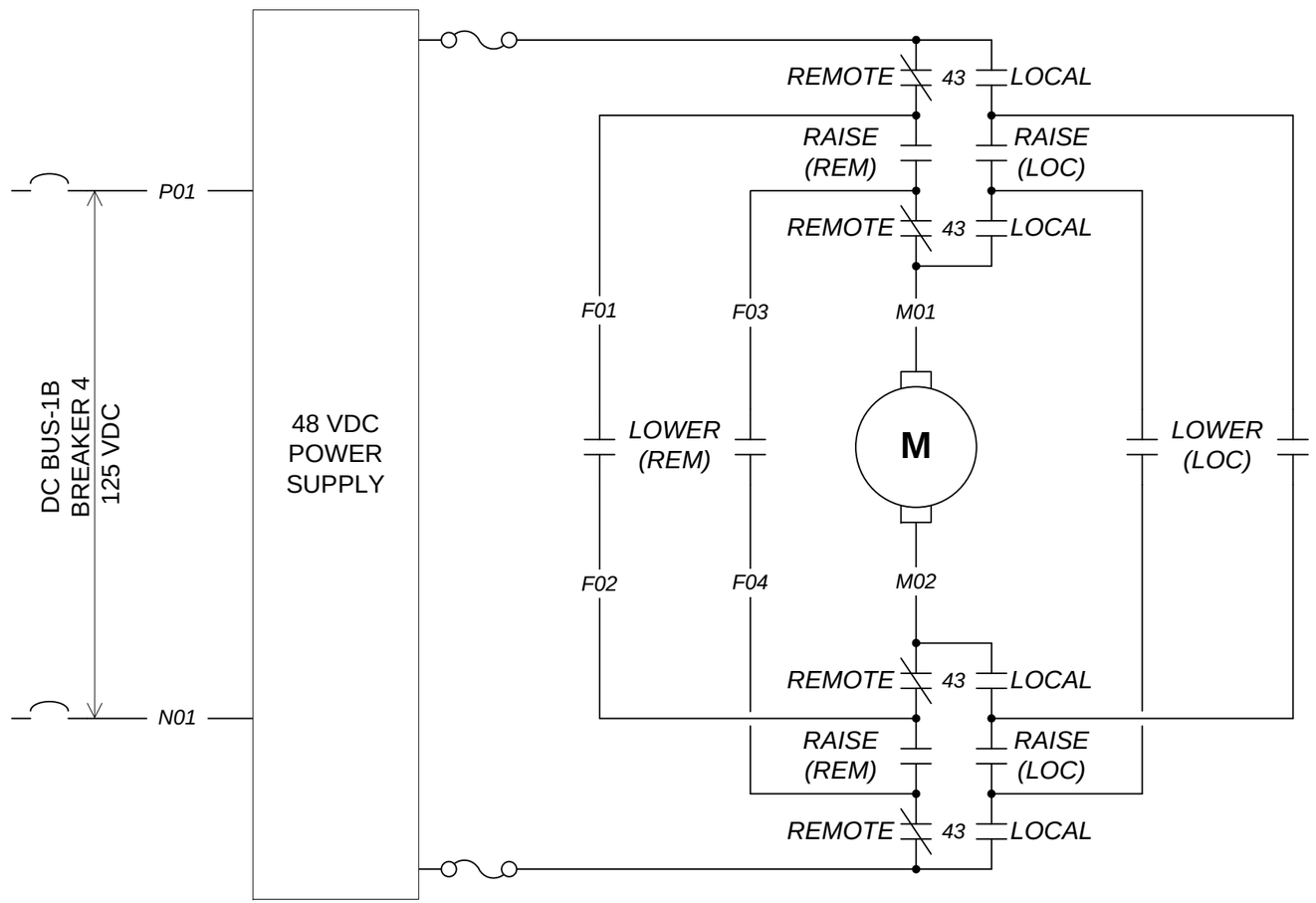

MOV-15, SCHEME DB4

Example No.	Title	Drawing No.
6	MOV-15 Elementary Diagram	E-6-1
Normal Position CLOSED	Failed Position Elec: AS-IS Air: N/A	Function State CLOSED - THROTTLED

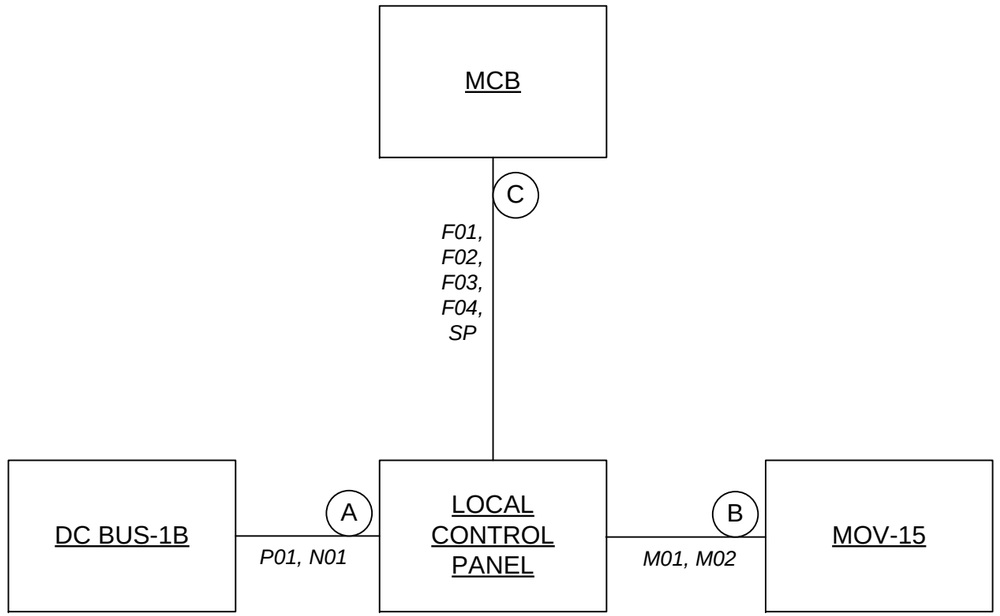

MOV-15
SCHEME DB4

Example No.	Title	Drawing No.
6	MOV-15 Block Diagram	E-6-2
Normal Position CLOSED	Failed Position Elec: AS-IS Air: N/A	Function State CLOSED - THROTTLED