CIRCUIT ANALYSIS WORKSHEET

Component ID: LC-B Component Type: 480 V LOAD CENTER

Component Description: Example 15

Normal Position: ENERGIZED

Failed Electrical Position: DEENERGIZED

Failed Air Position: N/A

Function State:

Initial Position: ENERGIZED – NORMAL

Desired Position ENERGIZED - NORMAL

BE Code: LC-B LCBF (480 V LC-BUS FAULT)

High Consequence Component Yes ☐ No ☒

Power Supplies: _____ Breaker: _____ Req'd ☐

_____ Breaker: _____ Req'd ☐

Cable Analysis:

Cable ID	Req'd ?	MHS ?	Fault Consequence	Comments

Cable ID	Req'd ?	MHS ?	Fault Consequence	Comments

Equipment Dependencies:

Comments:

Fault Mode Likelihood Analysis:

Cable ID	Insulation	Raceway	6850 Table	No. Cond	Gnd Cond	Sources	Targets	P (x)

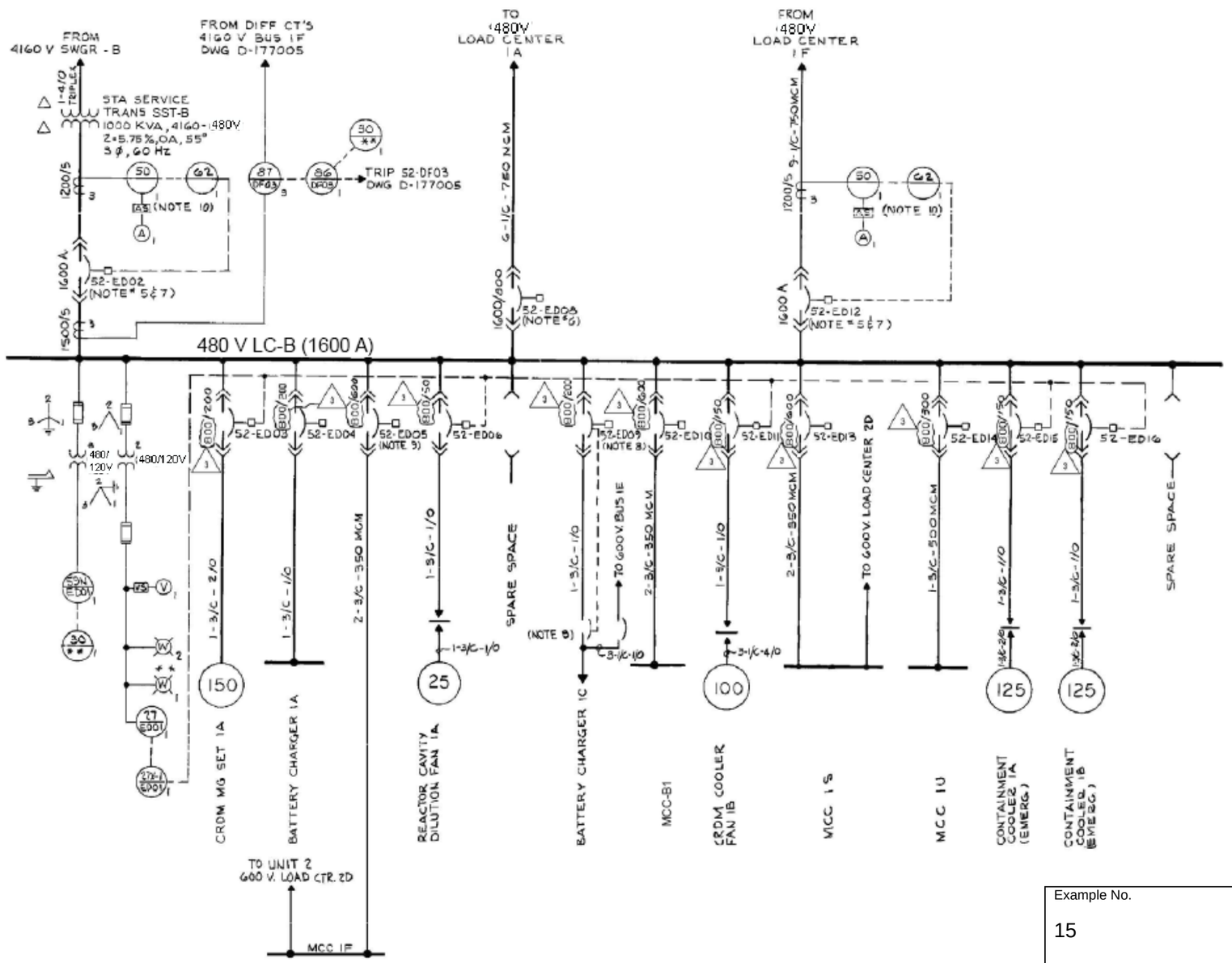

DEVICE	DESCRIPTION	MFR/TYPE	REMARKS
50 NOTE 10	STA. SERVICE TRANSF. 1D OVER CURRENT RELAY, 3Ø	GE/PJC32G	
62 NOTE 10	TIME DELAY RELAY	AGASTAT/ E7012PA	
50 NOTE 10	OVER CURRENT RELAY, 3Ø, FOR INC FDR FROM LOAD CTR 1F	GE/PJC32G	
62 NOTE 10	TIME DELAY RELAY	AGASTAT/ E7012PA	
87 DF03	STA. SERVICE TRANSF. 1D DIFFERENTIAL RELAY	GE/12STD15C5A	
86 DF03	STA. SERVICE TRANSF 1D LOCKING OUT RELAY	G.E/HEA	
59N ED01	BUS 1D OVER VOLTAGE RELAY (GROUND DETECTION)	WEST/CV-8	
27 ED01	BUS 1D UNDER VOLTAGE RELAY	WEST/CV-2	
27X-1 ED01	BUS 1D UNDER VOLTAGE AUXILIARY RELAY.	WEST/MG-6	

NOTES

1. ** - DENOTES EMERG. POWER BOARD IN MAIN CONT. RM.
2. INTERRUPTING RATING OF ACB'S IS 22,000 AMPS RMS SYMMETRICAL (MIN)
3. BUS SHORT CIRCUIT RATING 22,000 AMPS SYMMETRICAL.
4. STATION SERVICE TRANSFORMER "ASKAREL" TYPE.
5. BREAKERS 52-ED02 AND 52-ED12 ARE KEY INTERLOCKED SO THAT ONLY ONE CAN BE CLOSED AT ANY TIME (DWG. B-177128)
6. BREAKERS 52-ED08 AND 52-EA09 (ON 480V BUS 1A) ARE OPERATED BY A SINGLE CONTROL SWITCH IN THE MAIN CONTROL ROOM.
7. ALL BKR'S EXCEPT 52-ED02 & 52-ED12 HAVE SOLID STATE TRIP UNITS WITH FOLLOWING DESIGNATIONS (BREAKER FRAME/SENSOR RATING-AMPERES)
8. BREAKERS 52-ED09, 52-EE06 AND MOLDED CASE BKRS. TO BATTERY CHARGER 1C ARE KEY INTERLOCKED SO THAT ONLY ONE BREAKER AND CORRESPONDING MOLDED CASE BKRS CAN BE CLOSED AT ANY TIME (DWG-C-177153).
9. UNIT 1 BREAKER ED06 IS ELECTRICALLY INTERLOCKED WITH UNIT 2 BREAKER ED06 TO PREVENT SIMULTANEOUS CLOSING OF BOTH BREAKERS.
10. LOCATED IN TERMINAL BLOCK COMPARTMENT ABOVE ASSOCIATED BREAKER.
11. THIS DRAWING SUPERSEDES DRAWING D-177010, SHT 1 OF 1 REV. 14, DATED 11-15-90, PER PCN S-93-1-8690, REV. 0.

REFERENCE DRAWINGS

A-177538 - ELECTRICAL GENERAL DETAILS & NOTES
D-177001 - SINGLE LINE ELEC. AUX. SYSTEM (4160 & 600V)

Example No.	Title	Drawing No.
15	LC-B One-Line Diagram	E-15-1
Normal Position	**Failed Position**	**Function State**
ENERIZED	Elec: DEENERGIZED Air: N/A	ENERGIZED-ENERGIZED

DEVICE	DESCRIPTION	MFR/TYPE	REMARKS
62	TIME DELAY PICK-UP RELAY	AGA/E7012PA	125V DC 0.1 TO 1.0 SEC

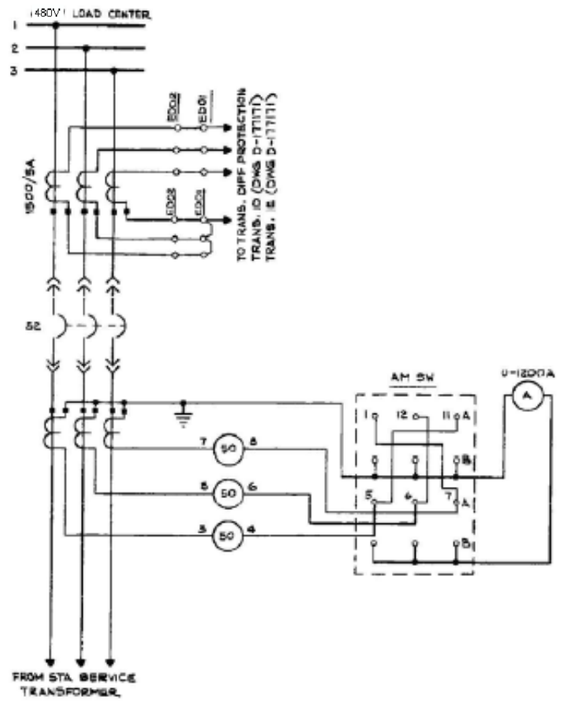

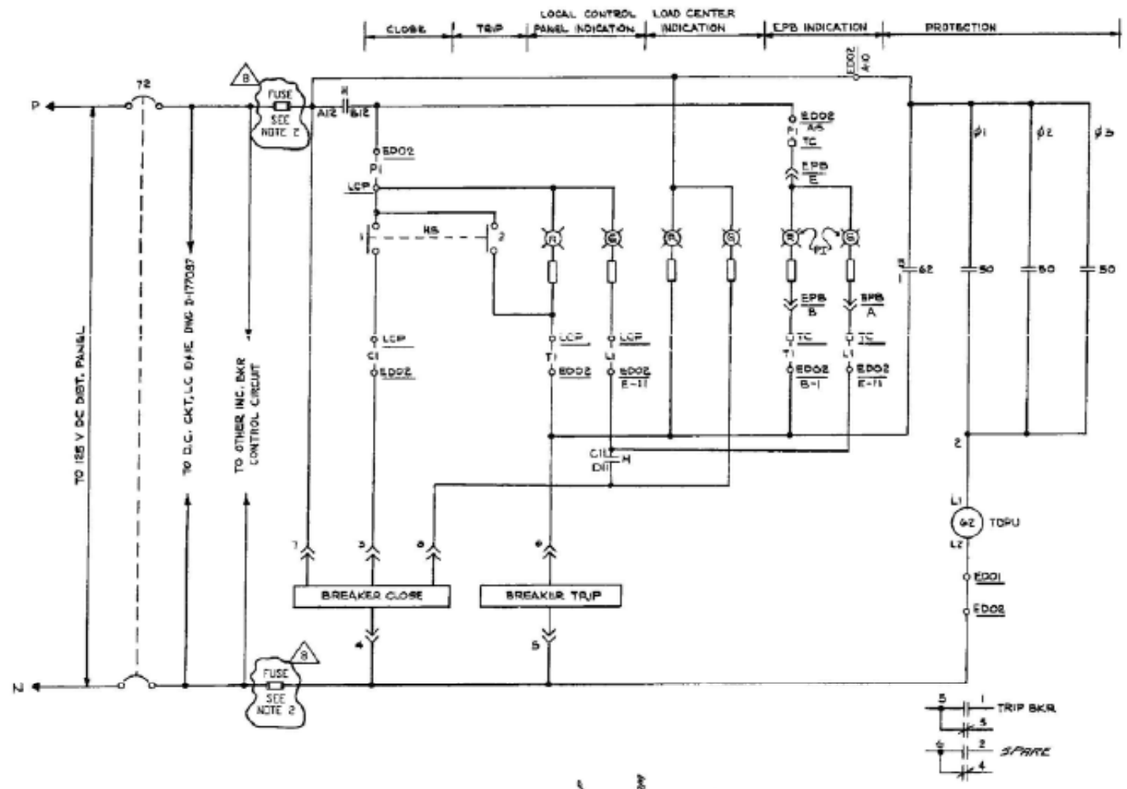

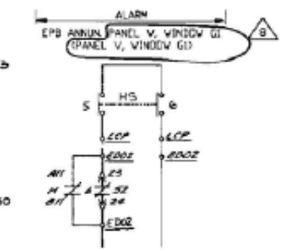

NOTES:

1. H=TRUCK OPERATED CELL SWITCH SHOWN FOR BREAKER IN TEST POSITION.
2. REFER TO FUSE MANUAL A-181987 FOR FUSE RATING AND TYPE.

REFERENCE DRAWINGS

D-177001 - SINGLE LINE, ELECTRICAL AUXILIARY SYSTEM (EMERG.-480V & 600V)

A-177558 - ELECTRICAL GENERAL DETAILS AND NOTES.

D-177010 SINGLE LINE PROTECTION AND METERING 600V LOAD CENTER ID (EMERGENCY)

D-177011 SINGLE LINE PROTECTION AND METERING 600V LOAD CENTER IE (EMERGENCY)

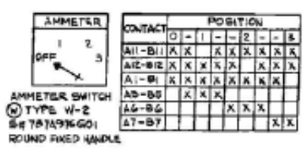

CONTACT	POSITION							
	0	-	1	-	-	2	-	3
A11-B11	X	X		X	X	X	X	X
A12-B12	X	X	X	X	X		X	X
A1-B1	X	X	X	X	X	X	X	X
A5-B5		X	X	X				
A6-B6					X	X	X	
A7-B7							X	X

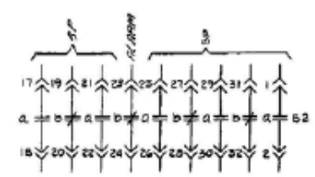

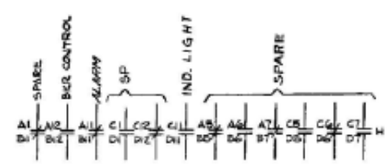

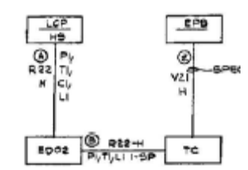

BLOCK DIAGRAM

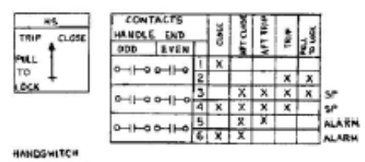

HANDSWITCH
GE SBM TYPE
MODEL UR 10A116
SPRING RETURN TO CENTER
PULL TO LOCK IN TRIP POSITION

EQUIPMENT		FAC	SCHEME	LOAD CENT COMPT.	LCP LOCAL CONTROL PANEL	START UP NUMBER	EPB EMERGENCY POWER BOARD	TC TERMINATION CABINET	PI POSITION INDICATOR LIGHT
INCOMING BREAKER TO 600V LOAD CENTER	ID	IV	AEDO2	EDO2	QIH21 EDO9-A	5	QSH19 EPB2508-AB	QIH25 LOB7-A	QIR16 ZL2015BA-A
	IE	IV	BEEO2	EEO2	QIH21 EDI0-B	5	QSH19 EPB2508-AB	QIH25 LOB9-B	QIR16 ZL2015BA-B

LL CABLE

Example No.	Title	Drawing No.
15	Breaker 52-ED-02 Elementary Diagram	E-15-2
Normal Position	**Failed Position**	**Function State**
ENERGIZED	Elec: DEENERGIZED Air: N/A	ENERGIZED-ENERGIZED

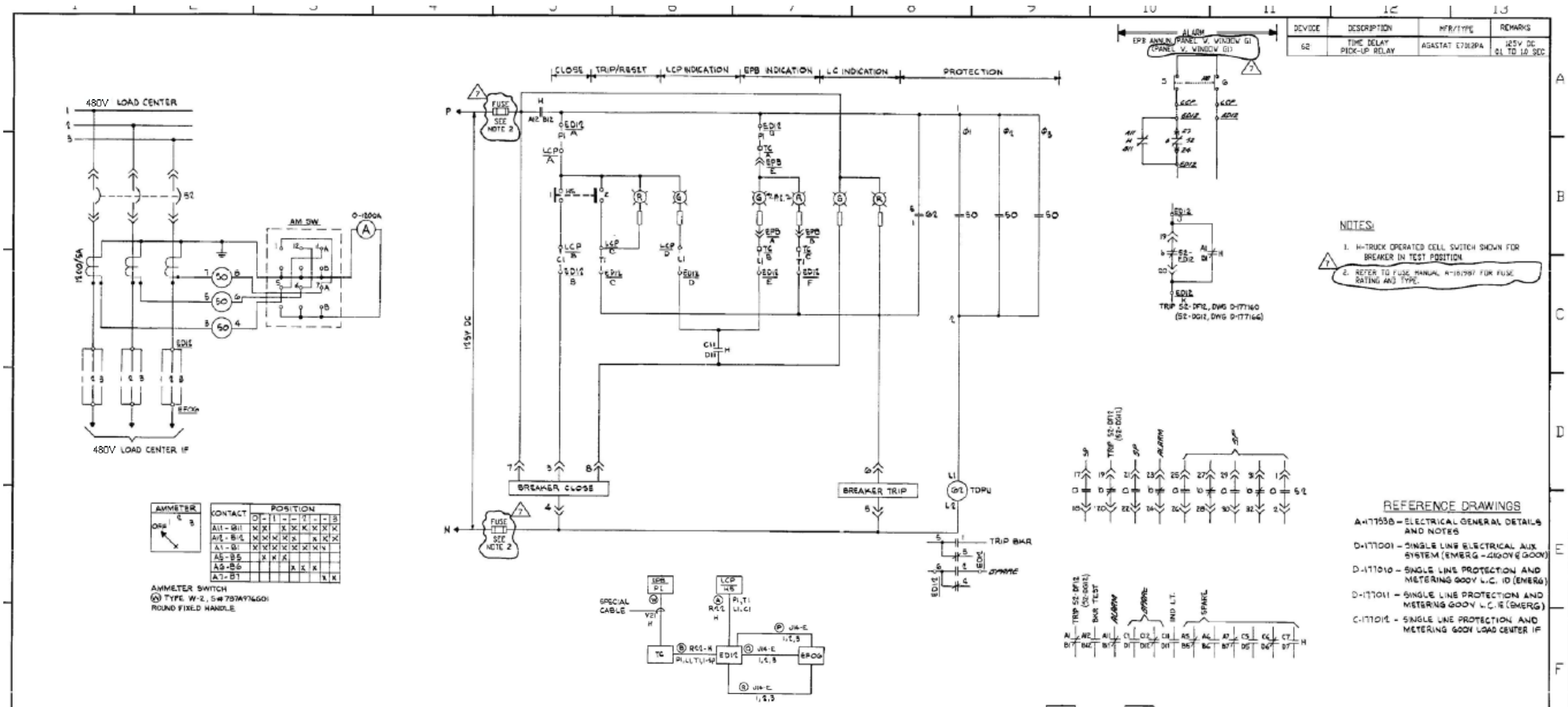

DEVICE	DESCRIPTION	MFR/TYPE	REMARKS
62	TIME DELAY PICK-UP RELAY	AGASTAT E7012PA	125V DC 0.1 TO 1.0 SEC

NOTES:

1. H-TRUCK OPERATED CELL SWITCH SHOWN FOR BREAKER IN TEST POSITION.
2. REFER TO FUSE MANUAL A-161987 FOR FUSE RATING AND TYPE.

AMMETER

CONTACT	POSITION							
	O	-	1	-	-	2	-	-	3
A11-B11	X	X		X	X	X	X	X	X
A12-B12	X	X	X	X	X		X	X	X
A1-B1	X	X	X	X	X	X	X	X	
A5-B5		X	X	X					
A6-B6					X	X	X		
A7-B7								X	X

AMMETER SWITCH
(A) TYPE W-2, S#787497660I
ROUND FIXED HANDLE

EQUIPMENT	FAC	SCHEME	L.C. COMPT.	LCP LOCAL CONTROL PANEL	EPB EMERG POWER BOARD	TC TERMINATION CABINET	PI POSITION IND. LIGHTS	START-UP NUMBER	L.C. COMPT
INCOMING GOOV LOAD CENTER BREAKER	1D	1V	AED12	EDI12	QSHIING EPD1250B-AB	QIN25 LO37-A	QIR16 TL1208MA-A	5	EFOG
	1E	1V	BEE12	EEI12	QSHIING EPD1250B-AB	QIN25 LO39-B	QIR16 TL1208MA-B	5	EFOB

LOAD CENTER COMPARTMENT	TERMINAL BLOCK NUMBERS									
	A	B	C	D	E	F	G	H	J	K
EDI2	A-5	A-7	B-1	E-1	E-11	B-2	A-6	B-6	B-4	C-11	D-12
EEI2	A-5	A-7	B-1	E-11	E-11	B-2	A-4	B-5	B-4	C-11	D-12

LOCAL CONTROL PNL	TERMINAL BLOCK NUMBERS			
	A	B	C	D
EDI2	TB7-9	TB7-11	TB7-10	TB7-12
EEI2	TB10-5	TB10-6	TB10-7	TB10-8

TERMINATION CABINET	TERMINAL BLOCK NUMBERS		
	A	B	C
QIN25LO37-A	TB2-35	TB2-36	TB2-37
QIN25LO39-B	STB1-33	STB1-31	STB1-32

HS
TRIP CLOSE
PULL TO LOCK

CONTACTS HANDLE END ODD	EVEN		CLOSE	AFT CLOSE	AFT TRIP	TRIP	PULL TO LOCK	
0-|-|-0	0-|-|-0	1	X					
		2				X	X	
0-|-|-0	0-|-|-0	3		X	X	X	X	SP
		4	X	X	X	X		SP
0-|-|-0	0-|-|-0	5		X	X			ALARM
		6	X	X				ALARM

HANDSWITCH
GE 5SM TYPE
MODEL NR 10A411G
SPRING RETURN TO CENTER
PULL TO LOCK IN TRIP POSITION.

REFERENCE DRAWINGS

A-177558 – ELECTRICAL GENERAL DETAILS AND NOTES
D-177001 – SINGLE LINE ELECTRICAL AUX SYSTEM (EMERG – 480V & GOOV)
D-177010 – SINGLE LINE PROTECTION AND METERING 600V L.C. 1D (EMERG)
D-177011 – SINGLE LINE PROTECTION AND METERING 600V L.C. 1E (EMERG)
C-177012 – SINGLE LINE PROTECTION AND METERING 600V LOAD CENTER 1F

Example No.	Title
15	4.16 KV SWGR-B One-Line Diagram
Normal Position	**Failed Position**
ENERGIZED	Elec:DEENERGIZED Air: N/A
Drawing No.	**Function State**
E-15-3	ENERGIZED-ENERGIZED

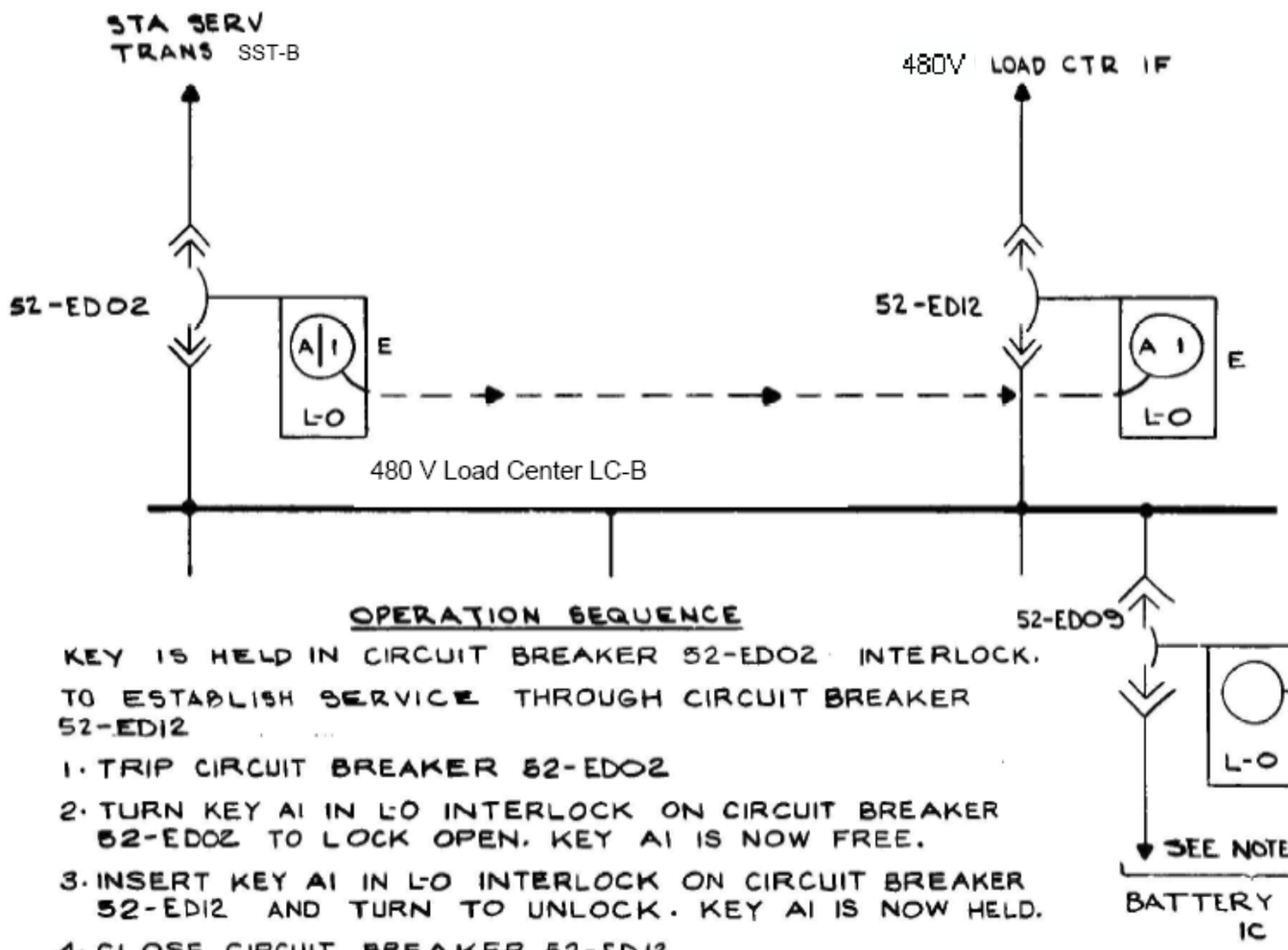

NOTES

1. ALL INTERLOCKS ARE KIRK TYPE
2. CIRCUIT BREAKERS 52-ED09, 52-EE06 & MOLDED CASE BREAKERS TO BATTERY CHARGER 1C ARE KEY INTERLOCKED SO THAT ONLY ONE BREAKER AND CORRESPONDING BATTERY CHARGER MOLDED CASE BREAKER CAN BE CLOSED AT ANY TIME (SEE DWG C-177133)

LEGEND

A1 L-O — INTERLOCK WITH KEY HELD.

A1 L-O — INTERLOCK WITH KEY REMOVED.

L-O — (LOCKED OPEN) INDICATES THAT THE KEY IS REMOVABLE WHEN THE CIRCUIT BREAKER IS LOCKED IN THE OPEN POSITION.

E — INDICATES KEY REMOVABLE ONLY WHEN BOLT EXTENDED.

INTERLOCK KEY TABLE

INTERLOCK	KEY NUMBER
A1	RE-14204

OPERATION SEQUENCE

KEY IS HELD IN CIRCUIT BREAKER 52-ED02 INTERLOCK.

TO ESTABLISH SERVICE THROUGH CIRCUIT BREAKER 52-ED12

1. TRIP CIRCUIT BREAKER 52-ED02
2. TURN KEY A1 IN L-O INTERLOCK ON CIRCUIT BREAKER 52-ED02 TO LOCK OPEN. KEY A1 IS NOW FREE.
3. INSERT KEY A1 IN L-O INTERLOCK ON CIRCUIT BREAKER 52-ED12 AND TURN TO UNLOCK. KEY A1 IS NOW HELD.
4. CLOSE CIRCUIT BREAKER 52-ED12.

REVERSE SEQUENCE TO RESTORE SERVICE THROUGH CIRCUIT BREAKER 52-ED02.

NOTE: AS AN EXCEPTION FOR MAINTENANCE WORK PER A PLANT PROCEDURE, TWO KEYS MAY BE USED TO OVERRIDE THE NORMAL CIRCUIT BREAKER INTERLOCK FEATURE. 4

REFERENCE DWG.

D-177001 - SINGLE LINE ELEC AUX SYSTEM (4160V & 480V)

C-177010 - SINGLE LINE PROTECTION & METERING 480V LOAD CENTER 1D

A-177538 - ELEC GEN DETAILS & NOTES

Example No.	Title	Drawing No.
15	Bus LC-B INCOMING BREAKER INTERLOCKS	E-15-4
Normal Position	**Failed Position**	**Function State**
ENERGIZED	Elec: DEENERGIZED Air: N/A	ENERGIZED-ENERGIZED

DEVICE	DESCRIPTION	MFR / TYPE	REMARKS
27X-1	UNDERVOLTAGE AUXILIARY RELAY	W/MG-G	125V DC
27X-2	UNDERVOLTAGE AUXILIARY RELAY	GE/HFA	125V DC

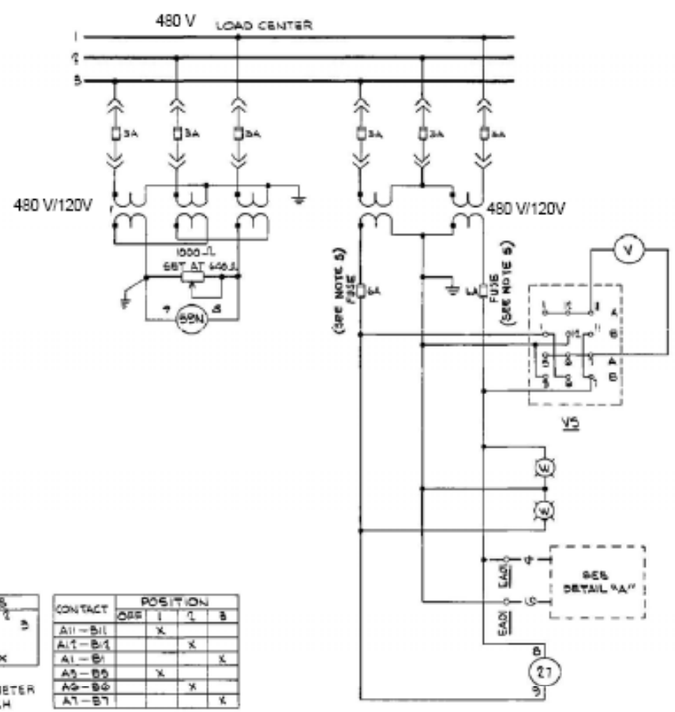

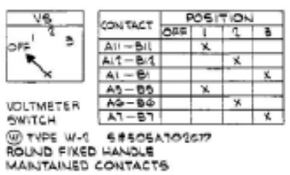

CONTACT	POSITION OFF	1	2	3
A11-B11		X		
A12-B12			X	
A1-B1				X
A3-B3		X		
A4-B4			X	
A7-B7				X

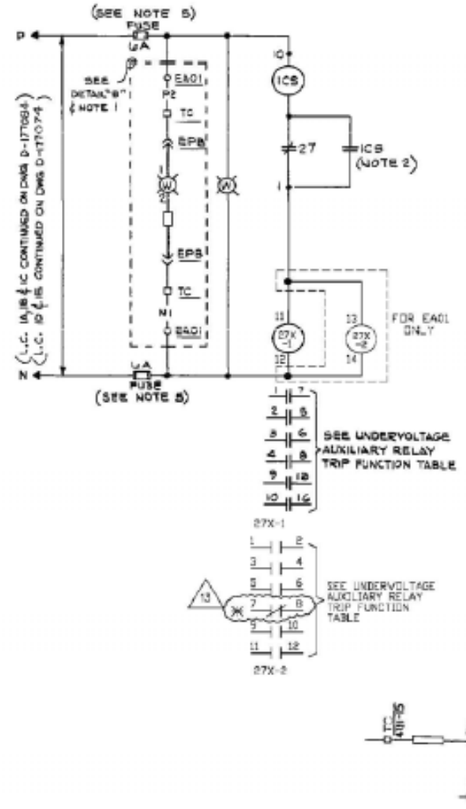

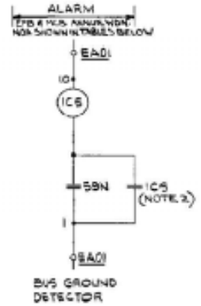

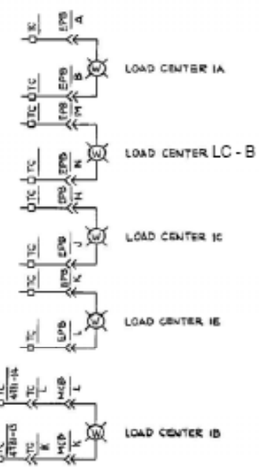

DETAIL "A" - A.C. POTENTIAL LIGHTS

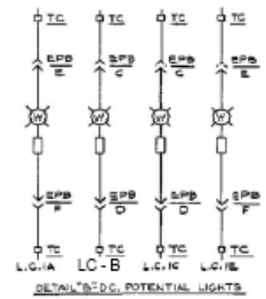

DETAIL "B" D.C. POTENTIAL LIGHTS

NOTES:

1. DOES NOT APPLY TO EB01.
2. SEAL IN CONTACT TO BE DISCONNECTED
3. CABLE FOR D.C. POTENTIAL LIGHTS.
4. CABLE FOR A.C. POTENTIAL LIGHTS.
5. SEE DRAWING A-181987 FOR FUSE RATING AND TYPE (LC COMPT'S EA01, EC01, EB01, AND EE01 ONLY).

UNDERVOLTAGE AUXILIARY RELAY TRIP FUNCTION TABLE

27X-1 EA01	LC BKR COMPT	TRIP FUNCTION	DWG NO	27X-1 EB01	LC BKR COMPT	TRIP FUNCTION	DWG NO	27X-1 EC01	LC BKR COMPT	TRIP FUNCTION	DWG NO	27X-1 ED01	LC BKR COMPT	TRIP FUNCTION	DWG NO	27X-1 EE01	LC BKR COMPT	TRIP FUNCTION	DWG NO
9 15	EA13	600-480/277V LIGHTING TRANS 1A	D-177090	4 8	EB05	CTMT COOLER 1B (NORMAL)	D-177221	2 6	EC09	SPENT FUEL POOL PUMP 1A	D-177205	4 8	ED03	CRDM MG SET 1A	D-177198	4 8	EE03	CRDM MG SET 1B	D-177198
2 5	EA06	CTMT PURGE AHU FAN STARTER PANEL	D-177242	3 6	EB06	CTMT COOLER 1C (NORMAL)	D-177221	1 7	EC12	CTMT COOLER 1D (NORMAL)	D-177221	1 7	ED15	CTMT COOLER 1A (EMERG)	D-177222	2 5	EE08	CTMT COOLER 1C (EMERG)	D-177222
3 6	EA10	CTMT COOLER 1A (NORMAL)	D-177221	2 5	EB10	HYDRO TEST PUMP	D-177241	9 15	—	SPARE	—	3 6	ED11	CRDM COOLER FAN 1B	D-177242	1 7	EE13	CRDM COOLER FAN 1A	D-177242
4 8	EA12	SPENT FUEL POOL PUMP 1B	D-177205	9 15	—	SPARE	—	4 8	EC05	AUX BLDG MAIN EXHAUST FAN 1A	D-177257	10 16	ED16	CTMT COOLER 1B (EMERG)	D-177222	10 16	EE16	CTMT COOLER 1D (EMERG)	D-177222
1 7	EA05	CTMT PURGE EXH. FAN STARTER PANEL	D-177242	1 7	EB11	AUX BLDG MAIN EXHAUST FAN 1B	D-177257	3 6	EC06	RADWASTE AND SUPPLY FAN	D-177260	2 5	ED06	REACTOR CAVITY H2 DIL. SYSTEM AIR COMP. 1A	D-177277	3 6	EE09	REACTOR CAVITY H2 DIL. SYSTEM AIR COMP. 1B	D-177277
10 16	—	SPARE		10 16	—	SPARE	—	10 16	—	SPARE	—	9 18	—	SPARE	—	9 18	—	SPARE	—

27X-2 EA01	LC BKR COMPT	TRIP FUNCTION	DWG NO
1 2	EA11	PRESSURIZER HTR GROUP 1A	D-177189
3 4	EA15	STATION AIR COMPRESSOR 1C	D-172746 SH. 4
5 6	—	SPARE	
7 8	EA15	STATION AIR COMPRESSOR 1C AUTO CLOSE	D-172746 SH. 4
9 10	—	SPARE	
11 12	—	SPARE	

13

* CONSTRUCTION NOTE: FIELD TO CONVERT NO CONTACT 7-8 TO NC. 13

EPB	TC				EPB
EMERGENCY PUMPS BUREAU	TERMINATION CABINET	FAC	SWGR CELL	SCHEME	START-UP NUMBER	ANN. WDW. NO.
GEHEING EPB2508-A3	01H25L037-A	1V	EA01	AEA01	0	PANEL "V," G2
GEHEING EPB2508-A3	01H25L039-B	1V	EC01	BEC01	0	PANEL "V," G2
GEHEING EPB2508-A3	01H25L037-A	1V	ED01	AED01	0	PANEL "V," G2
GEHEING EPB2508-A3	01H25L039-B	1V	EE01	BEE01	0	PANEL "V," G2

MCB	TC					LB	MCB
MAIN CONTROL BUREAU	TERMINATION CABINET	FAC	SWGR CELL	SCHEME	START-UP NUMBER	BUS POTENTIAL LIGHT BUS	ANNUNCIATOR WINDOW NO.
GEHEING MCB2508-A3	01H25L016-B	1V	EB01	YEB01	0	MH13E12B1F-N	PANEL "L," B3

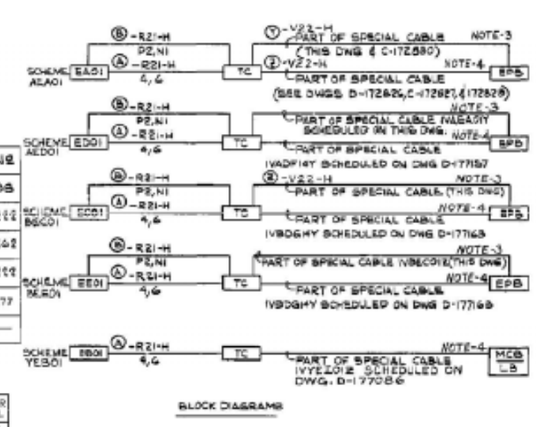

BLOCK DIAGRAMS

REFERENCE DRAWINGS:

A-177558 — ELECTRICAL GENERAL DETAILS AND NOTES
D-177000 — SINGLE LINE ELECTRICAL AUX SYSTEM (NORMAL - 4160V & 600V)
D-177001 — SINGLE LINE ELECTRICAL AUX SYSTEM (EMERG - 4160V & 600V)
D-177007 — SINGLE LINE PROTECTION AND METERING 600V LOAD CENTER 1A
C-177008 — SINGLE LINE PROTECTION AND METERING 600V LOAD CENTER 1B
C-177009 — SINGLE LINE PROTECTION AND METERING 600V LOAD CENTER 1C
D-177010 — SINGLE LINE PROTECTION AND METERING 600V LOAD CENTER 1D (EMERG)
D-177011 — SINGLE LINE PROTECTION AND METERING 600V LOAD CENTER 1E (EMERG)
A-181987 — FUSE REPLACEMENT MANUAL FOR SAFETY RELATED EQUIPMENT.

Example No.	Title	Drawing No.
15	Bus LC-B UNDERVOLTAGE SCHEME	E-15-5
Normal Position	Failed Position	Function State
ENERGIZED	Elec: DEENERGIZED Air: N/A	ENERGIZED-ENERGIZED

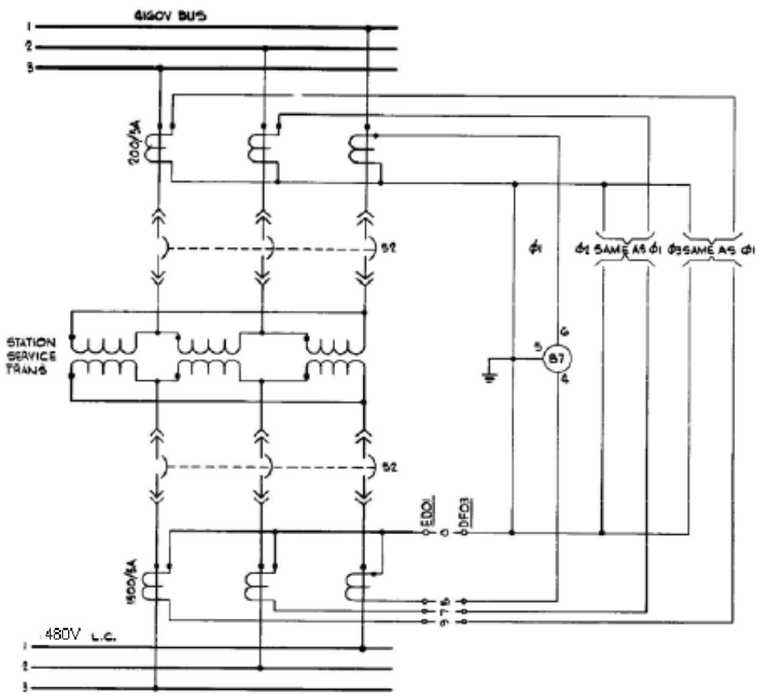

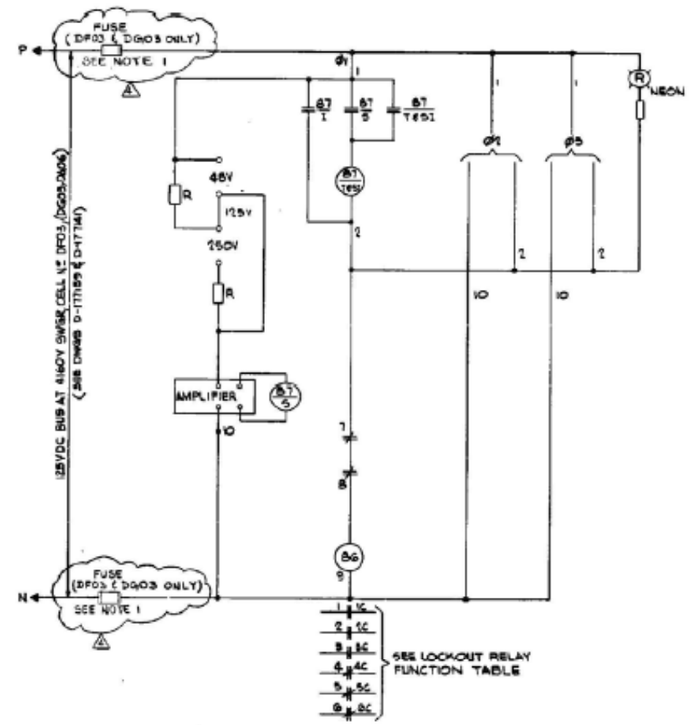

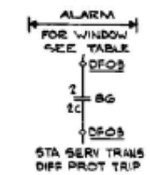

DEVICE	DESCRIPTION	MFR/TYPE	REMARKS
BG	LOCKOUT RELAY	GE/HEAGIA223	125V DC

NOTES:
1. SEE DRAWING A-181987 FOR FUSE RATING & TYPE.

LOCKOUT RELAY FUNCTION TABLE

BG DFO3	FUNCTION	DWG Nº	BG DGO3	FUNCTION	DWG Nº	BG DAO6	FUNCTION	DWG Nº
1 1C	TRIP BKR 52-DFO3	C-177159	1 1C	TRIP BKR 52-DGO3	C-177159	1 1C	TRIP BKR 52-DAO6	D-177141
2 2C	ALARM	THIS DWG	2 2C	ALARM	THIS DWG	2 2C	ALARM	THIS DWG
3 3C	SPARE	—	3 3C	SPARE	—	3 3C	SPARE	—
4 4C	SPARE	—	4 4C	SPARE	—	4 4C	BLOCK CLOSING BKR 52-DAO6	D-177141
5 5C	BLOCK CLOSING BKR 52-DFO3	C-177159	5 5C	BLOCK CLOSING BKR 52-DGO3	C-177159	5 5C	SPARE	—
6 6C	SPARE	—	6 6C	SPARE	—	6 6C	SPARE	—

EQUIPMENT		FAC	SCHEME	SWGR CELL	LOAD CENTER COMPARTMENT	START-UP NUMBER	ANNUNCIATOR WINDOW Nº
DIFFERENTIAL RELAY FOR STATION SERV TRANSFORMER	1D	IV	ADFO3	DFO3	EDO1	5	EPB PANEL "N" D4
	1E	IV	BDGO3	DGO3	EEDO1	5	EPB PANEL "V" D4
	1T	IV	XDAO6	DAO6	ETO1	5	HCB PANEL "L" E2

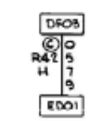

BLOCK DIAGRAM

REFERENCE DRAWINGS

A-177538 — ELECTRICAL GENERAL DETAILS AND NOTES
D-177001 — SINGLE LINE ELECTRICAL AUX SYSTEM (EMERG - 4160V & 600V)
D-177002 — SINGLE LINE PROTECTION AND METERING 4160V SWITCHGEAR BUS 1A
D-177005 — SINGLE LINE PROTECTION AND METERING 4160V SWITCHGEAR BUS 1F (EMERG)
D-177006 — SINGLE LINE PROTECTION AND METERING 4160V SWITCHGEAR BUS 1G (EMERG)
C-177010 — SINGLE LINE PROTECTION AND METERING 600V LOAD CENTER 1D (EMERG)
C-177011 — SINGLE LINE PROTECTION AND METERING 600V LOAD CENTER 1E (EMERG)
C-177074 — SINGLE LINE PROTECTION AND METERING 600V LOAD CENTER 1T
A-181987 — FUSE REPLACEMENT MANUAL FOR SAFETY RELATED EQUIPMENT.

Example No.	Title	Drawing No.
15	LC-B SST DIFFERENTIAL SCHEME	E-15-6
Normal Position	**Failed Position**	**Function State**
ENERGIZED	Elec: DEENERGIZED Air: N/A	ENERGIZED-ENERGIZED