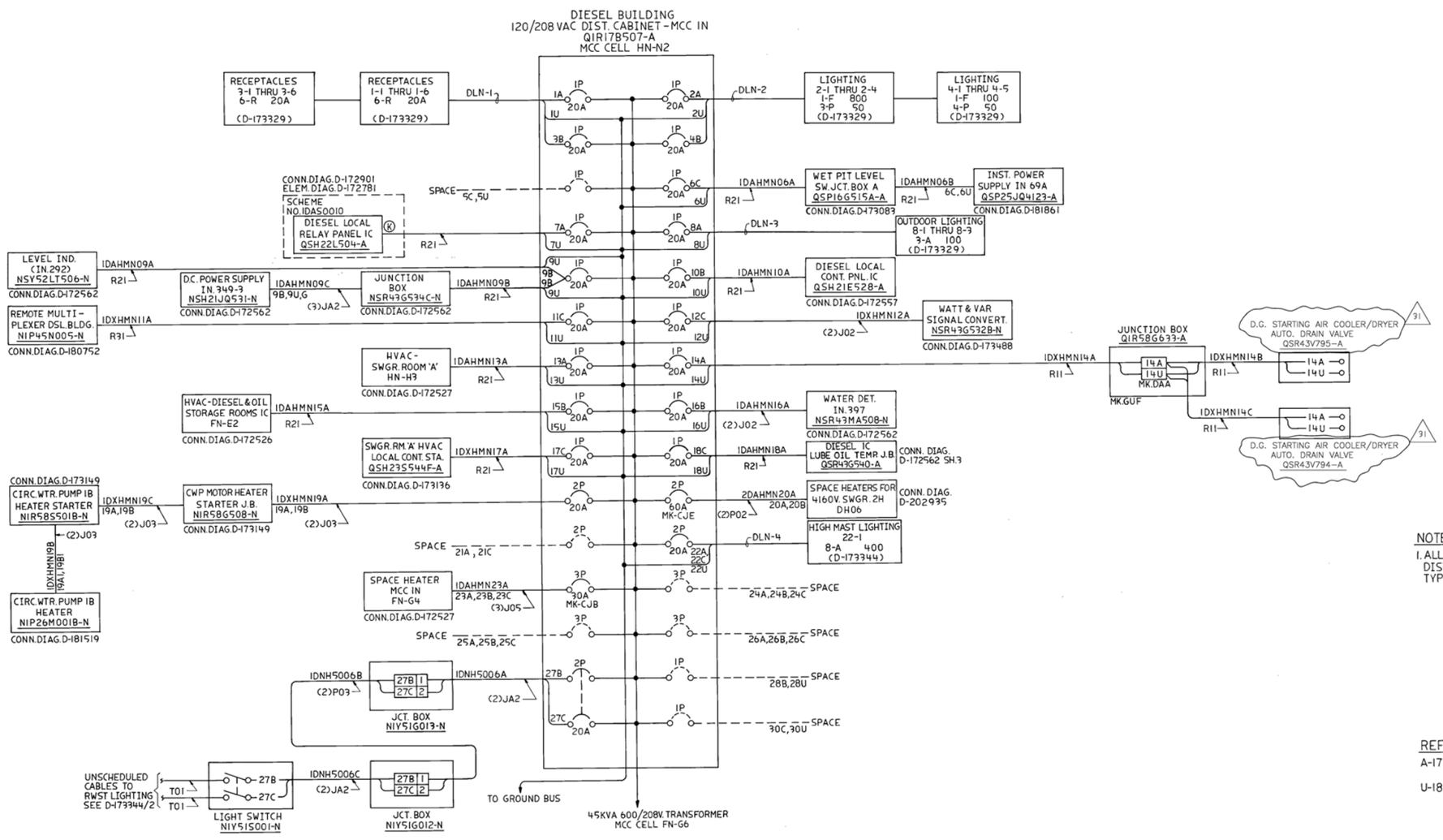

NOTES:

1. ALL BREAKERS IN THESE 208V. DISTRIBUTION PANELS ARE ITE TYPE EQ-B OR BQ.

REFERENCES:

A-177538	ELECT. GEN. DETAILS & NOTES
U-184788	WIRING DIAG. 45KVA TRANSF. 208V 3ϕ SUPPLY & 42 CIR. LTG. PNL.

Basics 12

120/208 VAC Panel Diagram

JOK RKF DEW

REV. NO. 91 DATE 9-13-99
REDRAWN PER ABN 99-0-1561. REV. 0

OPERATIONS CRITICAL