CIRCUIT ANALYSIS WORKSHEET

Component ID: AOV-2869A Component Type: AOV

Component Description: Example 8

Normal Position: CLOSED

Failed Electrical Position: CLOSED

Failed Air Position: CLOSED

Function State:

Initial Position: CLOSED

Desired Position OPEN

BE Code: 2869A-FTO

High Consequence Component Yes ☐ No ☒

Power Supplies: _____ Breaker: _____ Req'd ☐

_____ Breaker: _____ Req'd ☐

Cable Analysis:

Cable ID	Req'd ?	MHS ?	Fault Consequence	Comments

Cable ID	Req'd ?	MHS ?	Fault Consequence	Comments

Equipment Dependencies:

Comments:

Fault Mode Likelihood Analysis:

Cable ID	Insulation	Raceway	6850 Table	No. Cond	Gnd Cond	Sources	Targets	P (x)

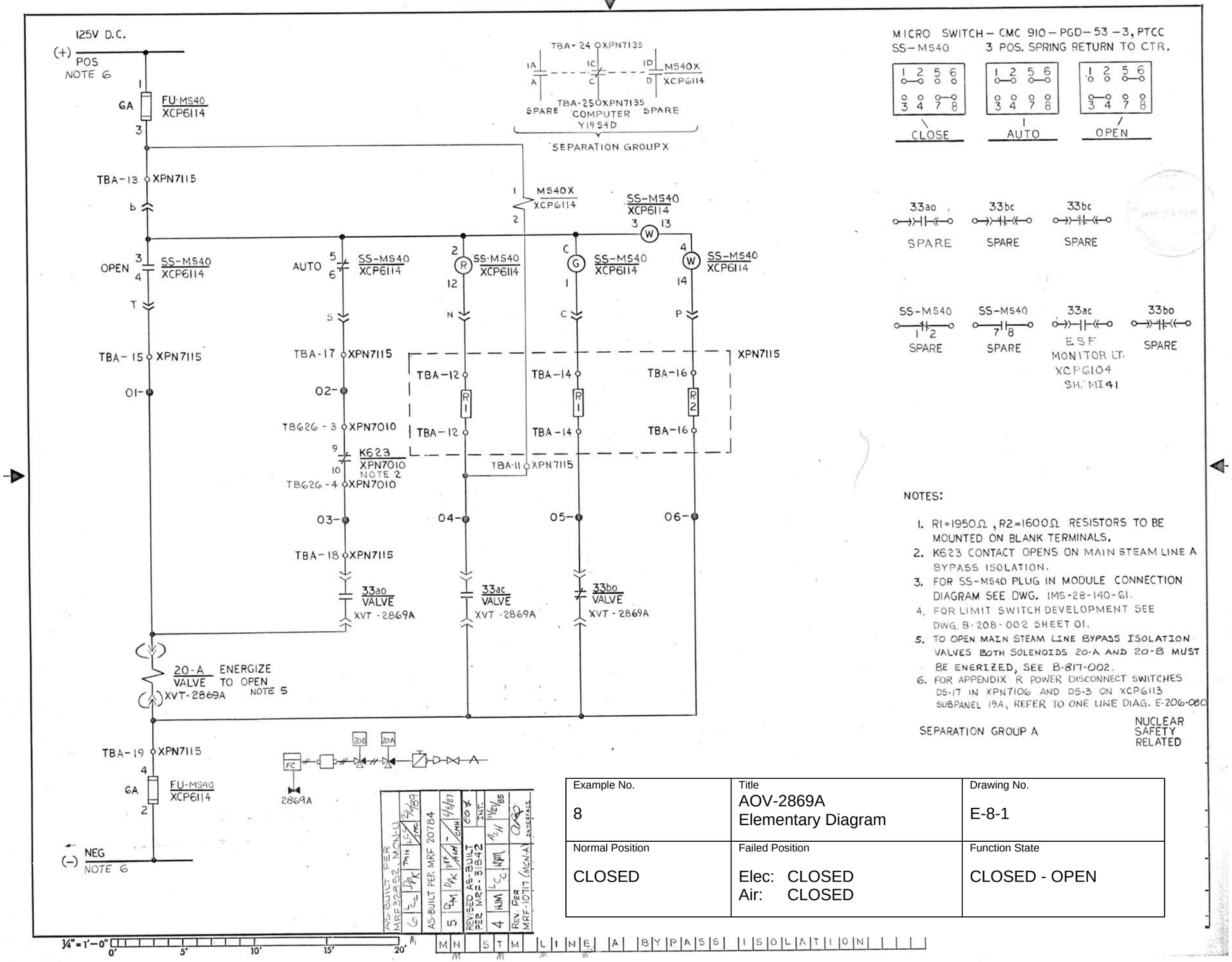

MICRO SWITCH – CMC 910 – PGD – 53 – 3, PTCC
SS-MS40 3 POS. SPRING RETURN TO CTR.

NOTES:

1. R1 = 1950Ω, R2 = 1600Ω RESISTORS TO BE MOUNTED ON BLANK TERMINALS.
2. K623 CONTACT OPENS ON MAIN STEAM LINE A BYPASS ISOLATION.
3. FOR SS-MS40 PLUG IN MODULE CONNECTION DIAGRAM SEE DWG. IMS-28-140-61.
4. FOR LIMIT SWITCH DEVELOPMENT SEE DWG. B-208-002 SHEET 01.
5. TO OPEN MAIN STEAM LINE BYPASS ISOLATION VALVES BOTH SOLENOIDS 20-A AND 20-B MUST BE ENERIZED, SEE B-817-002.
6. FOR APPENDIX R POWER DISCONNECT SWITCHES DS-17 IN XPN7106 AND DS-3 ON XCP6113 SUBPANEL 19A, REFER TO ONE LINE DIAG. E-206-080

SEPARATION GROUP A

NUCLEAR SAFETY RELATED

Example No.	Title	Drawing No.
8	AOV-2869A Elementary Diagram	E-8-1
Normal Position	**Failed Position**	**Function State**
CLOSED	Elec: CLOSED Air: CLOSED	CLOSED - OPEN

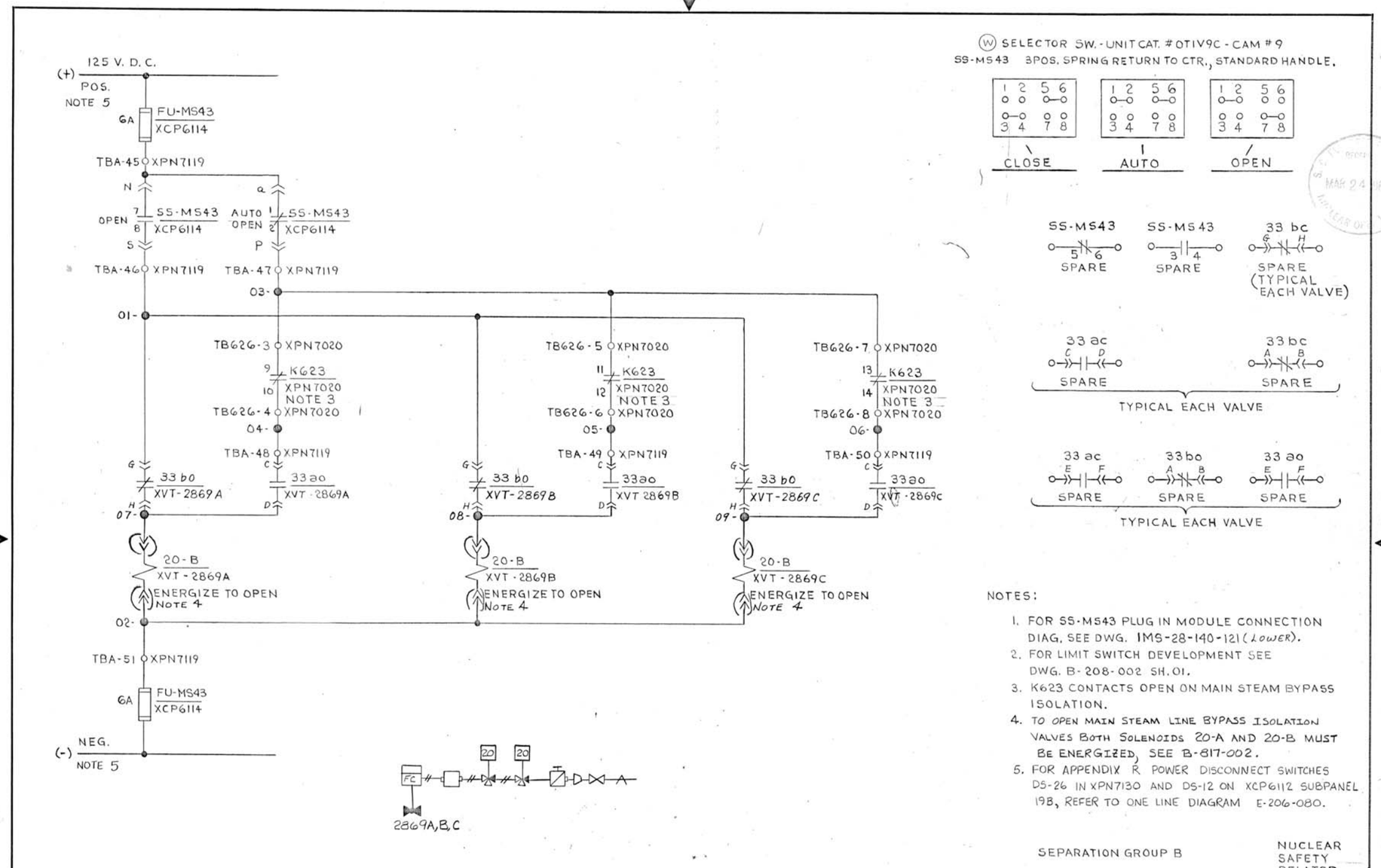

NOTES:

1. FOR SS-MS43 PLUG IN MODULE CONNECTION DIAG. SEE DWG. IMS-28-140-121 (LOWER).
2. FOR LIMIT SWITCH DEVELOPMENT SEE DWG. B-208-002 SH. 01.
3. K623 CONTACTS OPEN ON MAIN STEAM BYPASS ISOLATION.
4. TO OPEN MAIN STEAM LINE BYPASS ISOLATION VALVES BOTH SOLENOIDS 20-A AND 20-B MUST BE ENERGIZED, SEE B-817-002.
5. FOR APPENDIX R POWER DISCONNECT SWITCHES DS-26 IN XPN7130 AND DS-12 ON XCP6112 SUBPANEL 19B, REFER TO ONE LINE DIAGRAM E-206-080.

Example No.	Title	Drawing No.
8	AOV-2869A Elementary Diagram	E-8-2
Normal Position	**Failed Position**	**Function State**
CLOSED	Elec: CLOSED Air: CLOSED	CLOSED - OPEN

Example No.	Title	Drawing No.
8	AOV-2869A Block Diagram	E-8-3
Normal Position	**Failed Position**	**Function State**
CLOSED	Elec: CLOSED Air: CLOSED	CLOSED - OPEN

LEGEND:
A - CIRCUIT NO.
B - NO.COND.& WIRE SIZE
C - VOLTS
D - B/M ITEM
E - CONDUIT SIZE
F - NATURE OF CIRCUIT
G - WIRE MARKS

NUCLEAR SAFETY RELATED

CODE W MRF 31842 "85" SHEET W21

REV.K PER MRF 32.852, MCN-U

REFERENCE:- GAI B-208-067 MS40 VENDOR

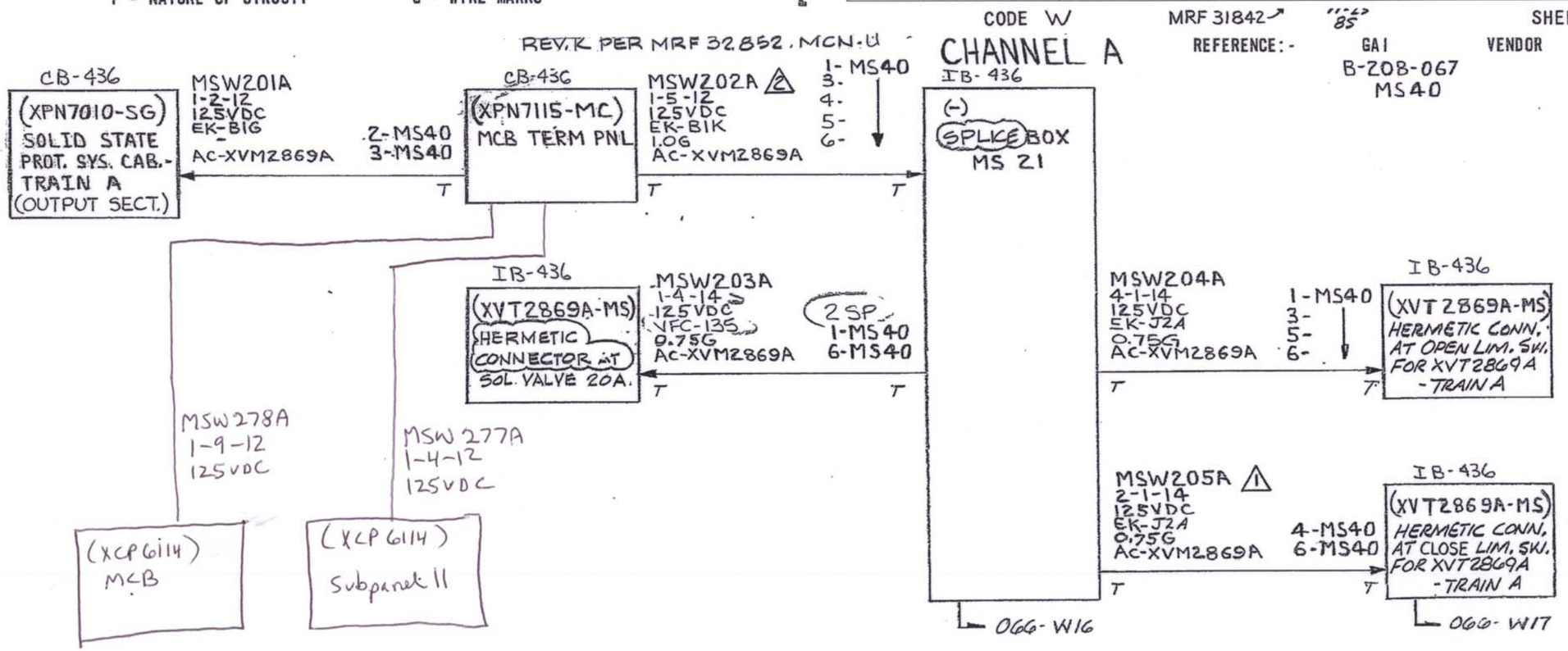

1 VIA XX-3518A
2 VIA XX-3567A

BLANK CIRCUITS - MSW206 THRU 210
NEXT CIRCUIT - MSW211

RELEASED FOR ENGR. DATE

K817 62173

Example No.	Title	Drawing No.
8	AOV-2869A Block Diagram	E-8-4
Normal Position	**Failed Position**	**Function State**
CLOSED	Elec: CLOSED Air: CLOSED	CLOSED - OPEN

LEGEND:
A - CIRCUIT NO.
B - NO.COND.& WIRE SIZE
C - VOLTS
D - B/M ITEM
E - CONDUIT SIZE
F - NATURE OF CIRCUIT
G - WIRE MARKS

NUCLEAR SAFETY RELATED

CODE W FCRB10278E SHEET W24

REV. J PER MRF 32852, MCN-U

CHANNEL B

REFERENCE:- GAI B-208-067 VENDOR MS43

IB-436 (XVT2869A-MS) HERMETIC CONNECTOR AT SOL. VALVE 20B
MSW231B 1-4-14 125VDC VFC-135 0.75G Bc-XVM2869A — 2 SP 7-MS43 2-MS43 — T T

IB-436 (XVT2869B-MS) HERMETIC CONNECTOR AT SOL. VALVE 20B
MSW232B 2-1-14 & 1-4-14 125VDC EK-J2A & VFC-135 0.75G Bc-XVM2869B — 5 — 8-MS43 2-MS43 — T T

IB-436 (XVT2869C-MS) HERMETIC CONNECTOR AT SOL. VALVE 20C
MSW233B 1 2 3 6 1-2-12 & 1-4-14 125VDC EK-B1G & VFC-135 0.75F Bc-XVM2869C — 9-MS43 2-MS43 — T T

IB-436 (XVT2869A-MS) HERMETIC CONN. AT OPEN LIM. SW. FOR XVT2869A - TRAIN B
MSW234B 4-1-14 125VDC EK-J2A 0.75G Bc-XVM2869A — 7-MS43 7-MS43 1-MS43 4-MS43 — T T

IB-436 (-) SPLICE BOX MS24

IB-436 (XVT2869B-MS) HERMETIC CONN. AT OPEN LIM. SW. FOR XVT2869B - TRAIN B
MSW235B 4-1-14 125VDC EK-J2A 0.75G Bc-XVM2869B — 8-MS43 8-MS43 1-MS43 5-MS43 — T T

IB-436 (XVT2869C-MS) HERMETIC CONN. AT OPEN LIM. SW. FOR XVT2869C - TRAIN B
MSW236B 1 2 3 4 1-4-12 125VDC EK-B1J 0.75F Bc-XVM2869C — 9-MS43 9-MS43 1-MS43 6-MS43 — T T

MSW237B 1 1-7-12 125VDC EK-B1L 1.25G Bc-XVM2869A,B&C — 2SP 1-MS43 2- 4- 5- 6- — T T

CB-436 (XPN7119-MC) MCB TERM. PNL

MSW238B 1-4-12 125VDC EK-B1J Bc-XVM2869A,B&C — 3-MS43 4- 5- 6- — T T

CB-436 (XPN7020-SG) SOLID STATE PROT. SYS. CAB.- TRAIN B (OUTPUT SECT.)

MSW 266B 1-9-12 125VDC — (XCP 6114) MCB

MSW 267B 1-4-12 125VDC — (XCP 6114) Subpanel 12

1 VIA XX-2139B
2 VIA XX-2451B
3 VIA XX-3570B
4 SPLICE 4-1-14 WIRES, (EKJ9A), TO 1-4-12 WIRE IN SB-MS49
5 VIA SB-MS131. CABLE FROM SB-MS131 TO SOLENOID IS 1-4-14 (VFC-135)
6 VIA SB-MS127. CABLE FROM SB-MS127 TO SOLENOID IS 1-4-14 (VFC-135)

BLANK CIRCUITS - MSW239 & 240
NEXT CIRCUIT - MSW241

RELEASED FOR ENGR. DATE

K817 62173