CIRCUIT ANALYSIS WORKSHEET

Component ID: MOV-8706A Component Type: MOV

Component Description: Example 10

Normal Position: CLOSED

Failed Electrical Position: AS-IS

Failed Air Position: N/A

Function State:

Initial Position: CLOSED

Desired Position OPEN

BE Code: 8706A-FTO

High Consequence Component Yes ☐ No ☒

Power Supplies: _____ Breaker: _____ Req'd ☐

_____ Breaker: _____ Req'd ☐

Cable Analysis:

Cable ID	Req'd ?	MHS ?	Fault Consequence	Comments

Cable ID	Req'd ?	MHS ?	Fault Consequence	Comments

Equipment Dependencies:

Comments:

Fault Mode Likelihood Analysis:

Cable ID	Insulation	Raceway	6850 Table	No. Cond	Gnd Cond	Sources	Targets	P (x)

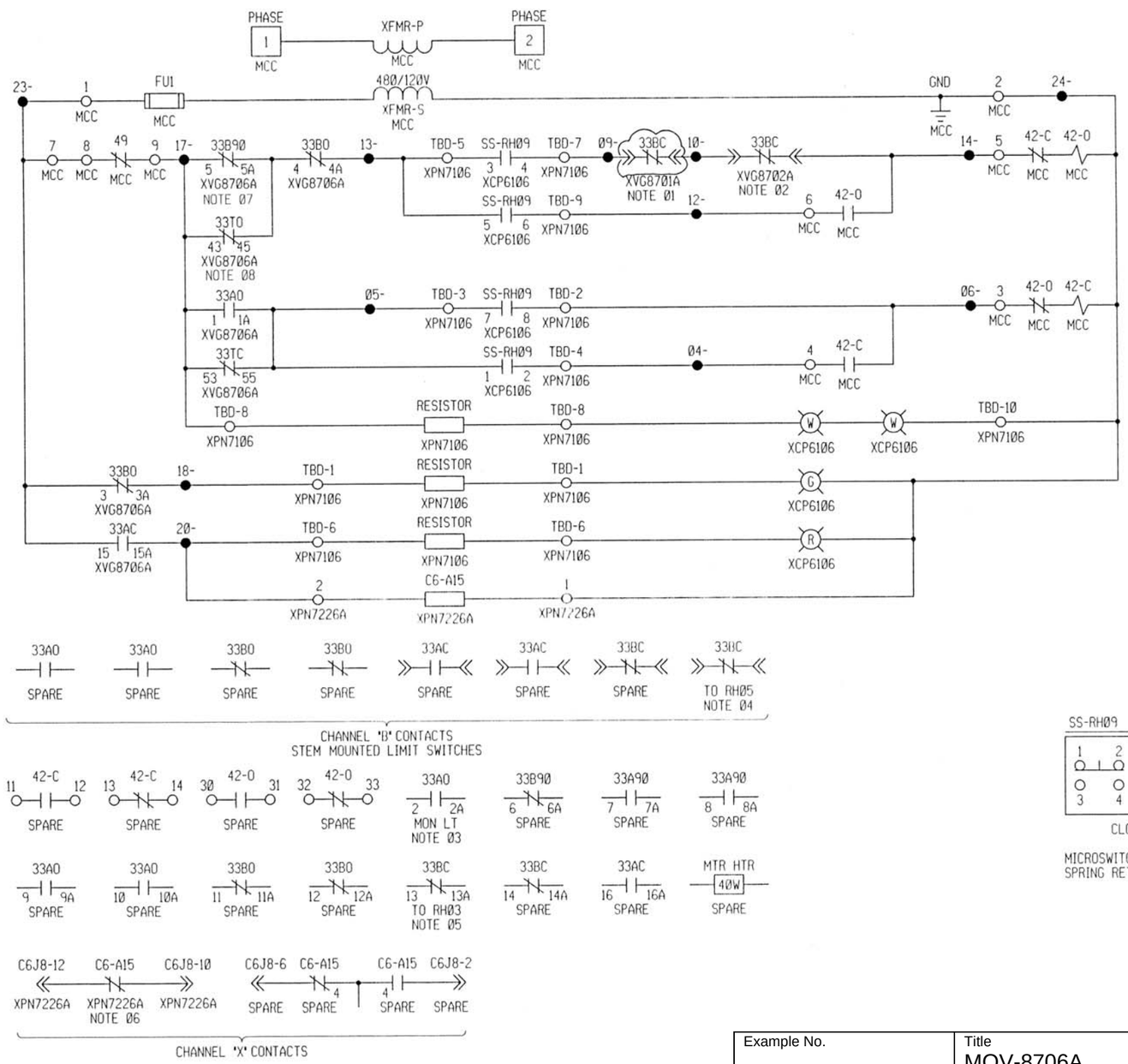

COMPONENT RELATED NOTES

01. FROM B-208-084 SHT. RH03 STEM MOUNTED CLOSE LIMIT SWITCH
02. FROM B-208-084 SHT. RH05, STEM MOUNTED CLOSE LIMIT SWITCH
03. TO ESF MONITOR LIGHTS, SEE B-208-066 SHT. MI09
04. TO RHR LOOP 1 INLET ISOLATION VALVE (XVG8702A), SEE B-208-084 SHT. RH05
05. TO RHR LOOP 1 INLET ISOLATION VALVE (XVG8701A), SEE B-208-084 SHT. RH03
06. TO TSC COMPUTER, C6-A15 ISOLATION MODULE
07. SET AT 90% (+5% / -0%) OPEN
08. SET AT 1

GENERAL DRAWING NOTES

A. REFERENCE WESTINGHOUSE DWG. 271C622 SHT. 327 (1MS-41-012-326).
B. DEVICES INDICATED IN MCC ARE LOCATED IN XMC1DA2Y UNIT 18EH.
C. FOR LIMIT SWITCH DEVELOPMENT, SEE B-208-002 SHT. 01,

THE LAST WIRE MARK NUMBER 24

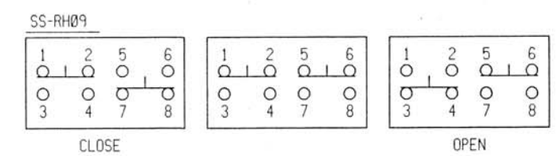

MICROSWITCH CMC #910-PGD-53-3, PTCC
SPRING RETURN OPEN AND CLOSE TO NORMAL

ESSENTIAL

Example No.	Title	Drawing No.
10	MOV-8706A Elementary Diagram	E-10-1
Normal Position	**Failed Position**	**Function State**
CLOSED	Elec: AS-IS Air: N/A	CLOSED - OPEN

LEGEND:

A - CIRCUIT NO.
B - NO. COND. & WIRE SIZE
C - VOLTS
D - B/M ITEM
E - CONDUIT SIZE
F - NATURE OF CIRCUIT

G - WIRE MARKS

NUCLEAR SAFETY RELATED

Example No.	Title	Drawing No.
10	MOV-8706A Block Diagram	E-10-2
Normal Position	**Failed Position**	**Function State**
CLOSED	Elec: AS-IS Air: N/A	CLOSED - OPEN

CHANNEL A CODE C

SHEET C7

B8

REFERENCE: GAI B-208-084 SH. RH-9 VENDOR

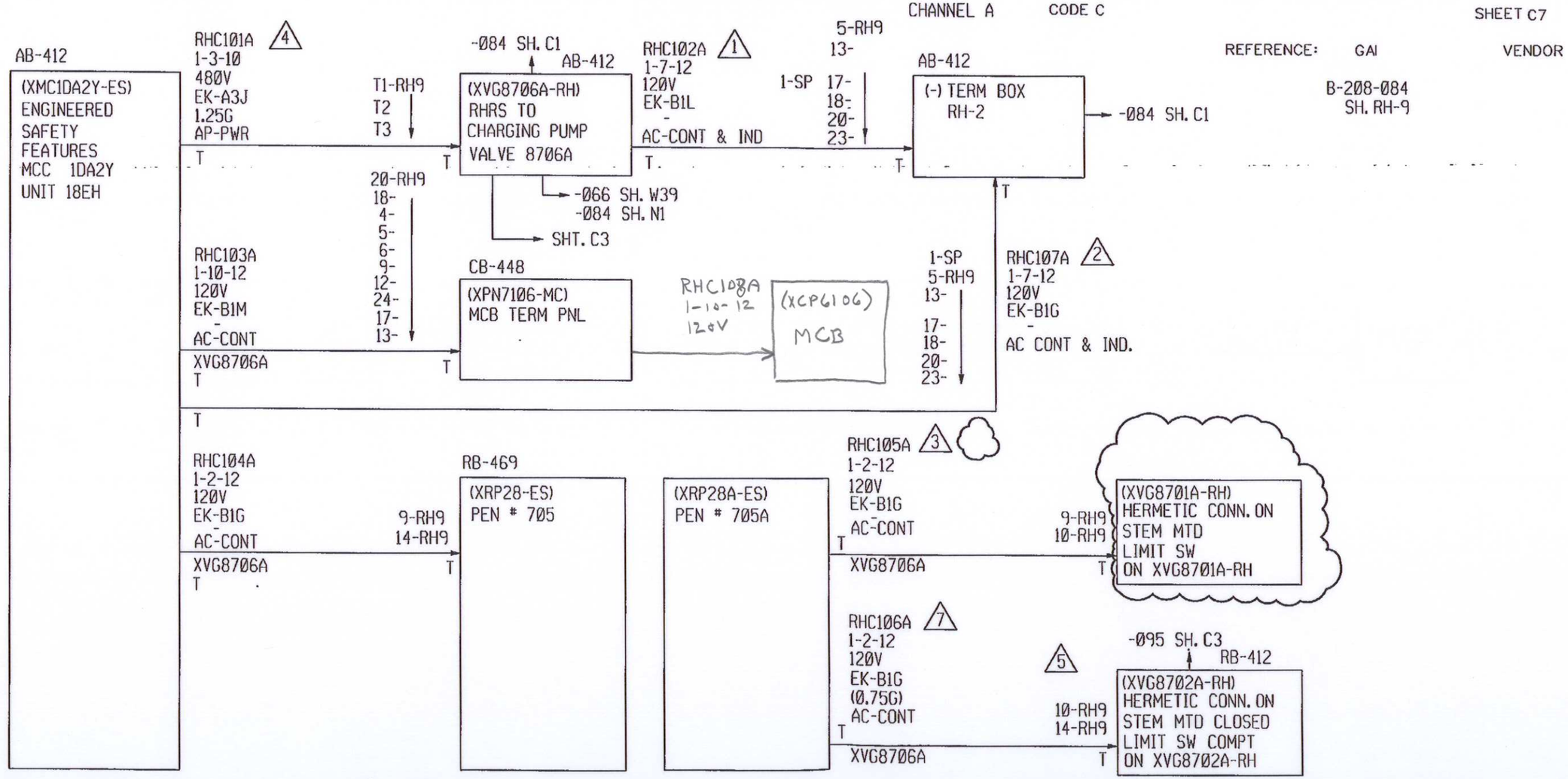

1. VIA XX-75A
2. VIA XX-76A
3. VIA XX-978A
4. TYPING NOTE 2 (SS-200-105) ○ #10
5. VIA XX-1731A, XX-1734A
7. VIA SPLICE BOX CS94, WIRING FROM SPLICE BOX TO HERMETIC CONN IS 2-1-14 BY FIELD. REF. FCRB-15, 448E

BLANK CIRCUITS - RHC108 THRU RHC110
NEXT CIRCUIT - RHC111

Example No.	Title	Drawing No.
10	MOV-8706A Block Diagram	E-10-3
Normal Position	**Failed Position**	**Function State**
CLOSED	Elec: AS-IS Air: N/A	CLOSED - OPEN

LEGEND:
A - CIRCUIT NO.
B - NO.COND.& WIRE SIZE
C - VOLTS
D - B/M ITEM
E - CONDUIT SIZE
F - NATURE OF CIRCUIT
G - WIRE MARKS

NUCLEAR SAFETY RELATED

FOR REFERENCE ONLY

CONSTRUCTION
BIDDING PURPOSES
RELEASED FOR
DATE
ENGR.

N/A
B

CHANNEL A

CB-448 (XPN7171-AH) HVAC CONT. BD. TERM PNL

- TXC1A 1-2-16 120 V EK-C1A — AC-CONT. — 9-AH102 10-
- TXC3A 1-2-16 120 V EK-C1A — AC-CONT. — 6-AH104 8-

CB-448 (XPN7106-MC) MCB TERM. PNL.

- TXC5A 1-2-16 120 V EK-C1A — AC-CONT. — 22-RH03 26-
- TXC6A 1-2-16 120 V EK-C1A — AC-CONT. — 22-RH04 26-
- TXC9A 1-2-16 120 V EK-C1A — AC-CONT. — 20-RH09 24-

CB-436 (XPN7226A-TX) ISOLATION I/O CAB. CHANNEL XA

CHANNEL B

CB-448 (XPN7177-AH) HVAC CONT. BD. TERM. PNL.

- TXC2B 1-2-16 120 V EK-C1A — BC-CONT. — 9-AH103 10-
- TXC4B 1-2-16 120 V EK-C1A — BC-CONT. — 6-AH105 8-

CB-448 (XPN7126-MC) MCB TERM. PNL.

- TXC7B 1-2-16 120 V EK-C1A — BC-CONT. — 22-RH05 26-
- TXC8B 1-2-16 120 V EK-C1A — BC-CONT. — 21-RH06 24-
- TXC10B 1-2-16 120 V EK-C1A — BC-CONT. — 20-RH10 24-

CB-436 (XPN7226B-TX) ISOLATION I/O CAB. CHANNEL XB

B-208-004	AH102	REV.	7
	AH103		7
	AH104		6
	AH105		7
B-208-084	RH03	REV.	3
	RH04		3
	RH05		3
	RH06		3
	RH09		7
	RH10		7

BLANK CIRCUITS -
NEXT CIRCUIT - TXC11

K817 62173