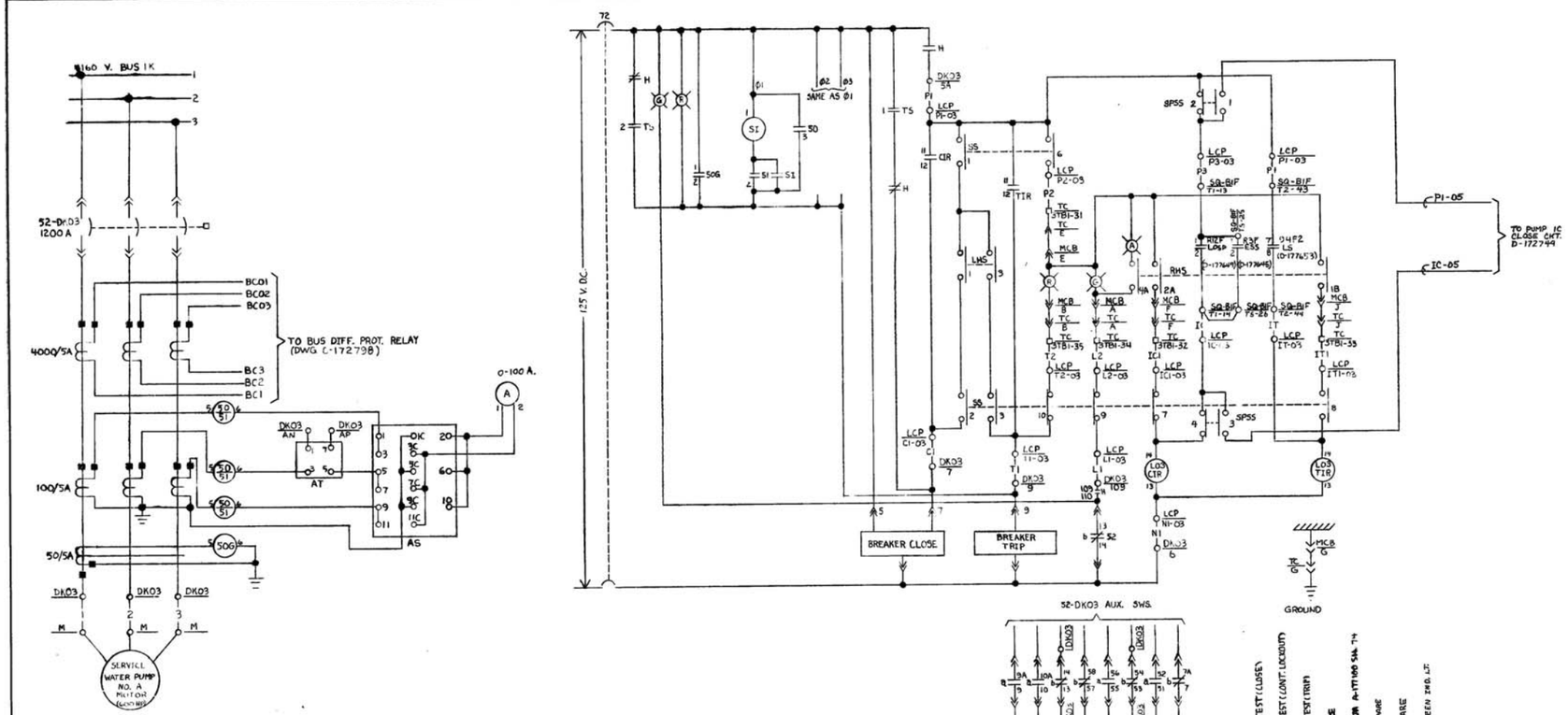

DEVICE LEGEND:

72	D.C. CIRCUIT BREAKER
52	A.C. CIRCUIT BREAKER
50G	GROUND DETECTION RELAY
50/51	OVERCURRENT RELAY
AS	AMMETER SWITCH
AT	AMMETER TRANSDUCER
H	CELL INTERLOCK SHOWN WITH BREAKER IN TEST POSITION
LS	LOAD SHED
ESS	ENGINEERED SAFEGUARD SYSTEM SEQUENCER
LOSP	LOSS OF OFFSITE POWER SEQUENCER
CIR	CLOSE INTERPOSING RELAY
TIR	TRIP INTERPOSING RELAY
SPSS	SPARE PUMP SELECTOR SWITCH
SI	SEAL-IN RELAY

REFERENCES:
A-177538 - ELEC. GENERAL DETAILS & NOTES
C-177043 - SINGLE LINE PROT. & METER. 4160 V. SWGR. BUS 1K (EMERG.)

AMMETER SWITCH (AS)

AS	CONTACTS HANDLE END ODD	EVEN	3	*	OFF	*	2	*	OFF	*	1
OFF 2 OFF 1	1		X	X	X	X	X	X	X	X	O
	2		O	O	O	O	O	O	O	X	X
	3		O	O	O	O	O	O	O	X	X
	5		X	X	X	X	O	X	X	X	X
	6		O	O	O	X	X	X	O	O	O
	7		O	O	O	X	X	X	O	O	O
	9		O	X	X	X	X	X	X	X	X
	10		X	X	O	O	O	O	O	O	O
	11		X	X	O	O	O	O	O	O	O

GE TYPE SB1 MOD. = 16SBICA15

SELECTOR SWITCH (SS)

SS LOCAL REMOTE	CONTACTS HANDLE END		LOCAL	REMOTE
	10-11-02	1	X	O
	30-11-04	2	X	O
	50-11-06	3	X	O
	70-11-08	4	X	O
	90-11-010	5	X	O
	110-11-012	6	O	X
	130-11-014	7	O	X
	150-11-016	8	O	X
	170-11-018	9	O	X
	190-11-020	10	O	X

A.C. SWITCH
MOD. NO 210-52-1919
MAINTAINED CONTACTS

TEST SWITCH (TS)

TS TRIP CLOSE	CONTACTS HANDLE END		TRIP	NORM	CLOSE
	10-11-02	1	O	O	X
	30-11-04	2	X	O	O

A.C. SWITCH
MOD. NO. 210-22-99
SPRING RETURN TO NORMAL

SPARE PUMP SELECTOR SWITCH

SPSS 1A 1C 1B	CONTACTS HANDLE END ODD	EVEN		1A	1C	1B	
	1	2	1	X	O	O	PUMP 1A
			2	O	X	X	
	3	4	3	X	O	O	
			4	O	X	X	
	5	6	5	X	X	O	PUMP 1B D-172748
			6	O	O	X	
	7	8	7	X	X	O	
			8	O	O	X	
	9	10	9	X	X	O	ESS BKR CLOSE FAILURE INDICATION D-177647
			10	O	O	X	
	11	12	11	X	O	O	
			12	O	X	X	

SIEMANS-ALLIS TYPE 210, SPECIAL ORDER, MAINTAINED CONTACTS, KEY OPERATED-KEY REMOVABLE IN THE "1C" POSITION ONLY. A SINGLE KEY OPERATES EITHER THIS SWITCH OR THE SWITCH SHOWN ON D-172751

HS5003A-A REMOTE HAND SWITCH (RHS)

BKR. CONTROL TRIP CLOSE	BLK.	CONT.	R	NAT	NAC	⇗	
	1	A	O	X	X	O	ANNUN. A-177100 SH. 74
		B	X	O	O	O	
	2	A	O	O	O	X	
		B	O	X	X	O	
	4	A	O	O	X	X	
		B	O	O	X	X	ANNUN. A-177100 SH. 74

GEMCO CAT. NO 40HS32221-1-W3-W7-SM1-7-60
SPRING RETURN TO NORMAL

LOCAL HAND SWITCH (LHS)

LHS TRIP CLOSE	CONTACTS HANDLE END		TRIP	NORM	CLOSE
	10-11-02	1	O	O	X
	30-11-04	2	O	O	X
	50-11-06	3	X	O	O
	70-11-08	4	X	O	O

A.C. SWITCH
MOD NO. 210-22-166
SPRING RETURN TO NORMAL

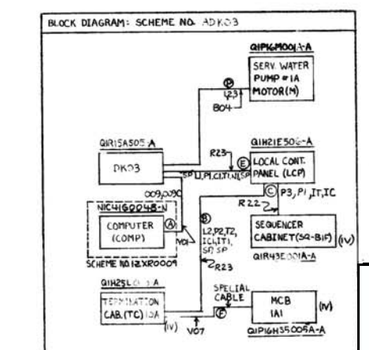

START UP NO. 11
FACILITY NO. 1Z
SCHEME NO. ADK03

Basics 9

4.16 kV Pump Schematic

REV.	DATE	
REV. HS 5005A.	1-26-76	
4	9-30-76	ADDED MOMENTARY CONTACT ACTUATED BY HAND SWITCH FOR REMOTE PUMP START
3	9-2-75	ADDED "B" CONTACT
2	8-23-75	REVISED TO DELETE CELL SWITCH, REV 50G RELAY
1	3-7-75	REV. D.C. BREAKER, REV SPSS DEVELOP., REV ANN., SQ-BIF, AND COM-A
0	11-30-73	ISSUED FOR APPROVAL AND CONSTRUCTION
7	8-30-11	REV. PER ICN 8-30-11-4000
6	8-30-11	REV. PER ICN 8-30-11-4000 REV. D-6
5	2-10-80	REV. PER SE-80-1-725-4
3	8-1-63	
2	8-1-63	
1	8-1-63	
0	11-21-73	

DRAWN RWS CHECKED DESIGNED
APPROVED DATE 11-21-73
APPROVED DATE 11-21-73
APPROVED DATE 11-21-73

REFER TO REV. OF THIS DWG.