NOTES:

1. CIRC. WATER PUMP BREAKERS TO HAVE DUAL TRIP COIL. XSWIC UNIT #1 WILL BE AN INSTALLED SPARE WITH DUAL TRIP COILS.
2. ** - INDICATES THESE ARE LOCALLY OPERATED BREAKERS USED AS DISCONNECT SWITCHES.
3. ⊗ INDICATES TOP ENTRY POWER CABLES OR BUS.
4. ⊗ INDICATES BOTTOM ENTRY POWER CABLE OR BUS.
5. ALL CONTROL CABLES FOR XSW1B & XSWIC ARE TOP ENTRY. ALL CONTROL CABLES FOR XSW1DX ARE BOTTOM ENTRY. CONTROL CABLES FOR XSW1A ARE TOP & BOTTOM ENTRY.
6. ⊗ THESE DEVICES TRIP THE BUS INCOMING BREAKERS.

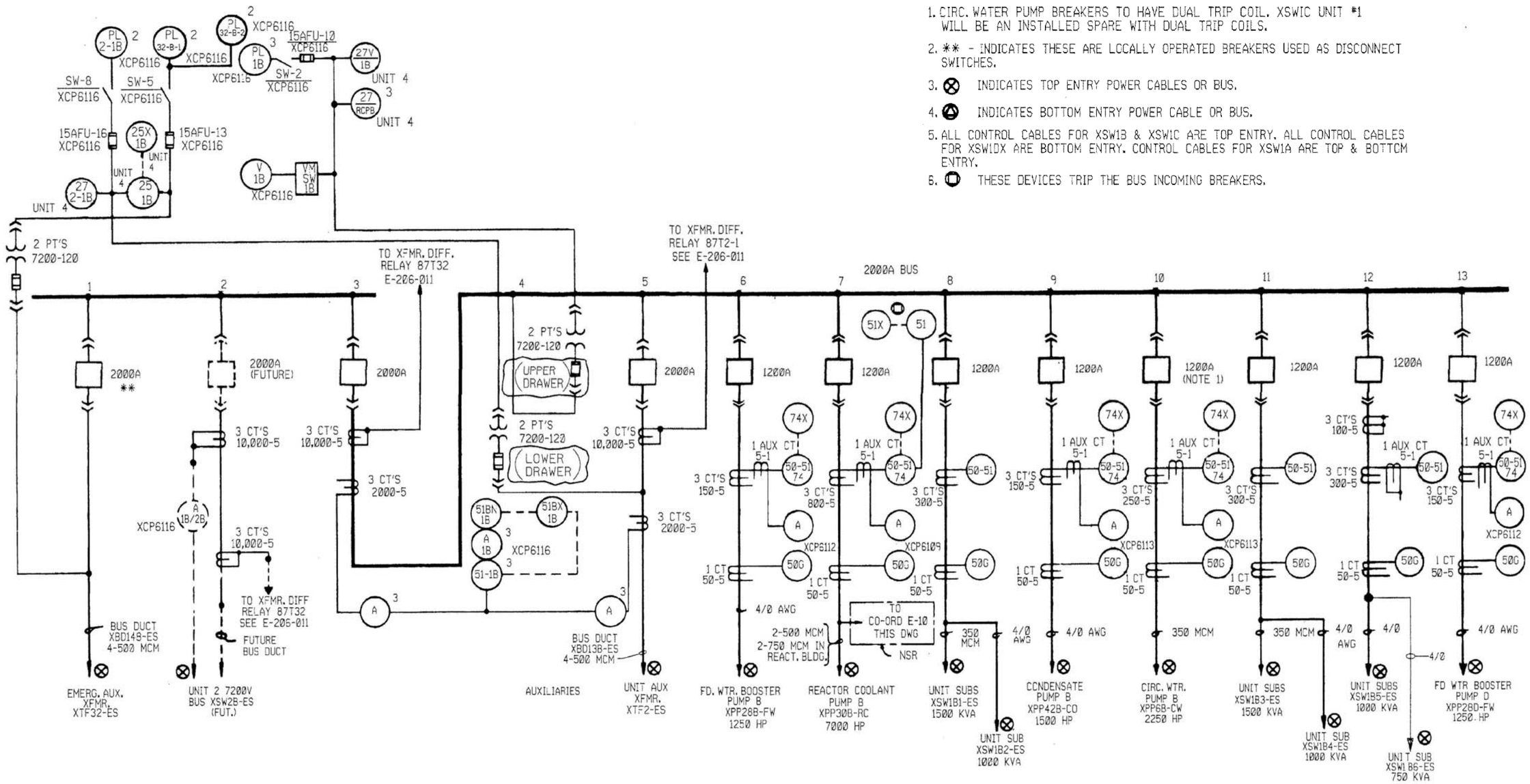

Basics 2

7.2 kV Bus One-Line