CIRCUIT ANALYSIS WORKSHEET

Component ID: TTR2 Component Type: Indicator

Component Description: Example 18

Normal Position: AVAILABLE

Failed Electrical Position: UNAVAILABLE

Failed Air Position: UNAVAILABLE

Function State:

Initial Position: AVAILABLE

Desired Position AVAILABLE

BE Code: TTR2-UNAVIL

High Consequence Component Yes ☐ No ☒

Power Supplies: _____ Breaker: _____ Req'd ☐

_____ Breaker: _____ Req'd ☐

Cable Analysis:

Cable ID	Req'd ?	MHS ?	Fault Consequence	Comments

Cable ID	Req'd ?	MHS ?	Fault Consequence	Comments

Equipment Dependencies:

Comments:

Fault Mode Likelihood Analysis:

Cable ID	Insulation	Raceway	6850 Table	No. Cond	Gnd Cond	Sources	Targets	P (x)

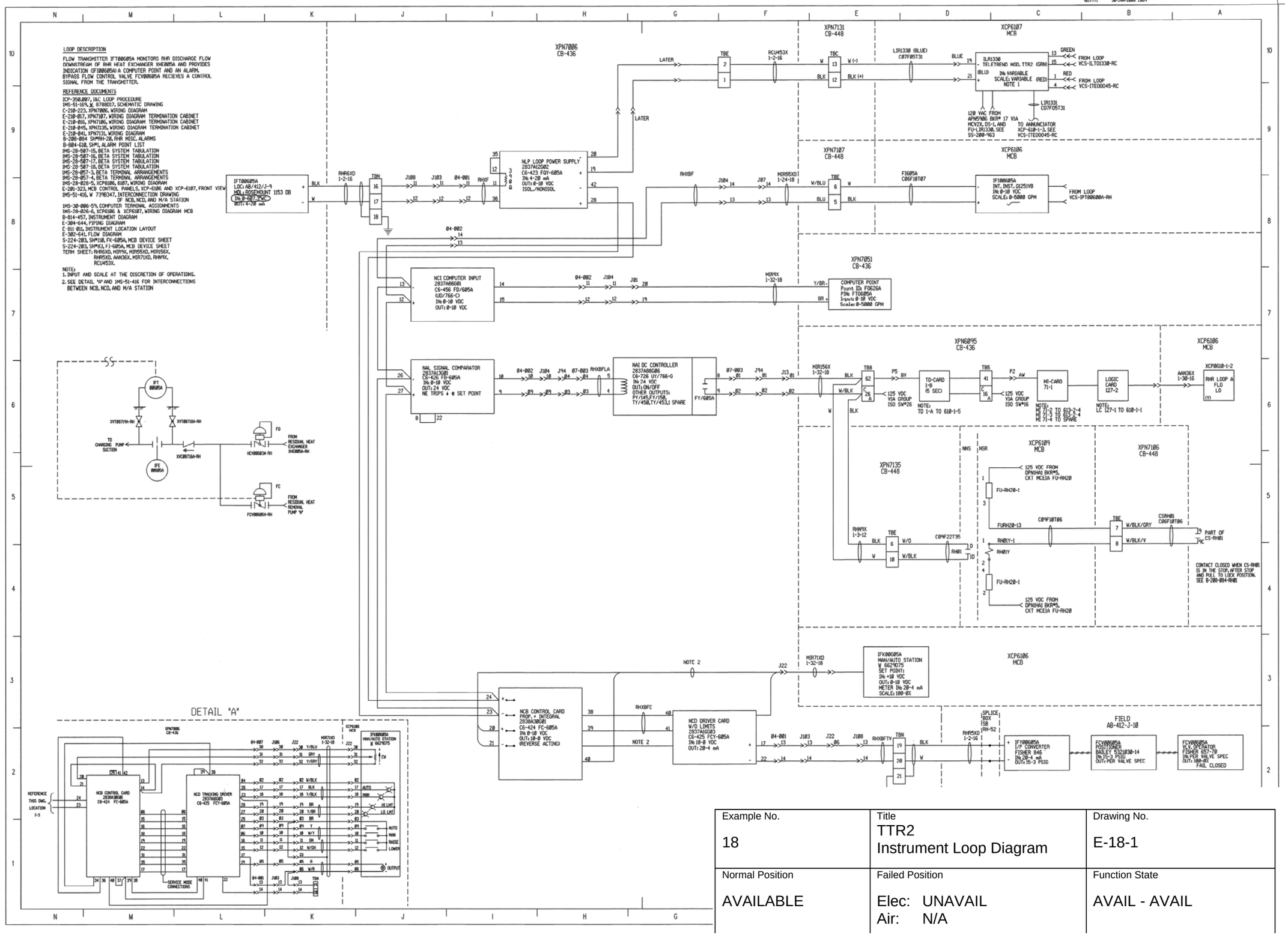

Example No.	Title	Drawing No.
18	TTR2 Instrument Loop Diagram	E-18-1
Normal Position	**Failed Position**	**Function State**
AVAILABLE	Elec: UNAVAIL Air: N/A	AVAIL - AVAIL