CIRCUIT ANALYSIS WORKSHEET

Component ID: ANN-1 Component Type: ANNUNCIATOR

Component Description: Example 11

Normal Position: AVAILABLE

Failed Electrical Position: UNAVAILABLE

Failed Air Position: N/A

Function State:

Initial Position: AVAILABLE

Desired Position NON-SPURIOUS

BE Code: ANN-1 FH

High Consequence Component Yes ☐ No ☒

Power Supplies: _____ Breaker: _____ Req'd ☐

_____ Breaker: _____ Req'd ☐

Cable Analysis:

Cable ID	Req'd ?	MHS ?	Fault Consequence	Comments

Cable ID	Req'd ?	MHS ?	Fault Consequence	Comments

Equipment Dependencies:

Comments:

Fault Mode Likelihood Analysis:

Cable ID	Insulation	Raceway	6850 Table	No. Cond	Gnd Cond	Sources	Targets	P (x)

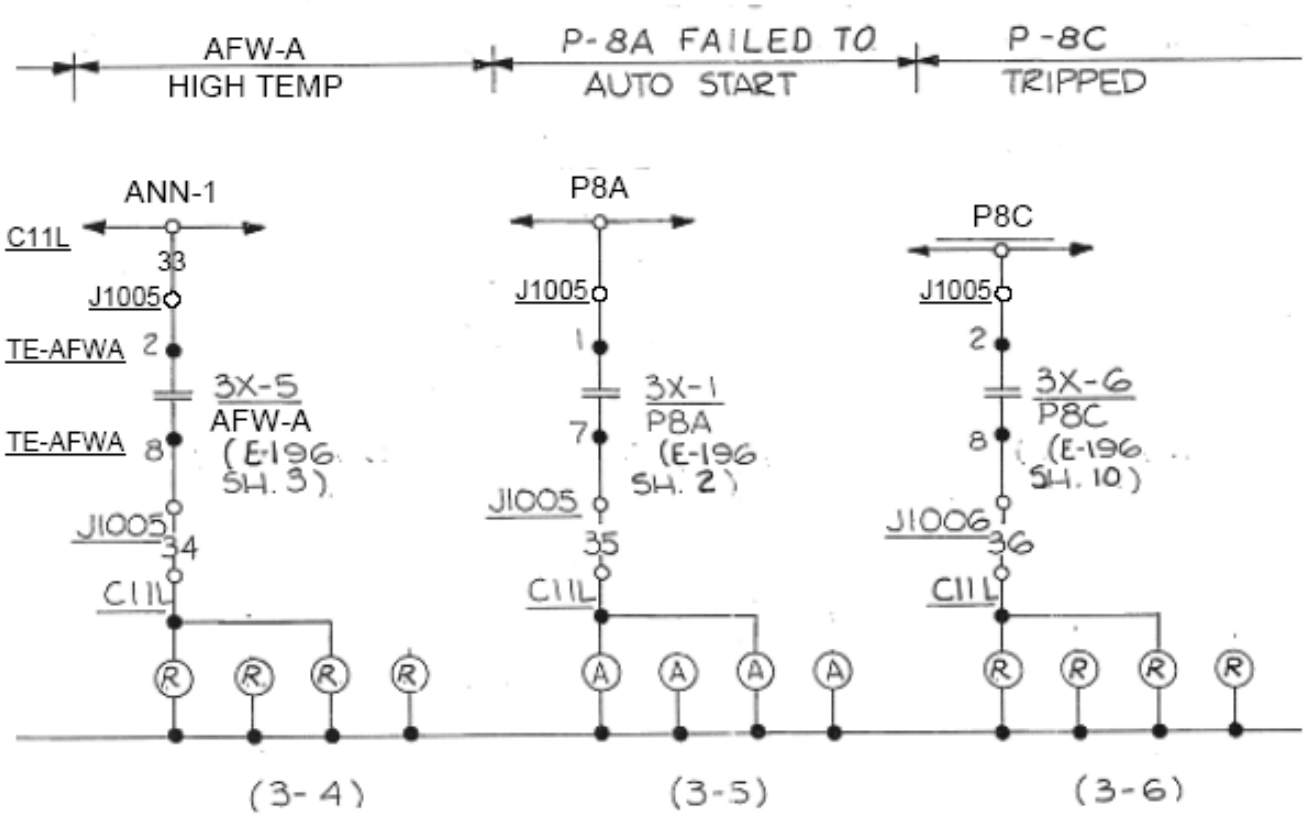

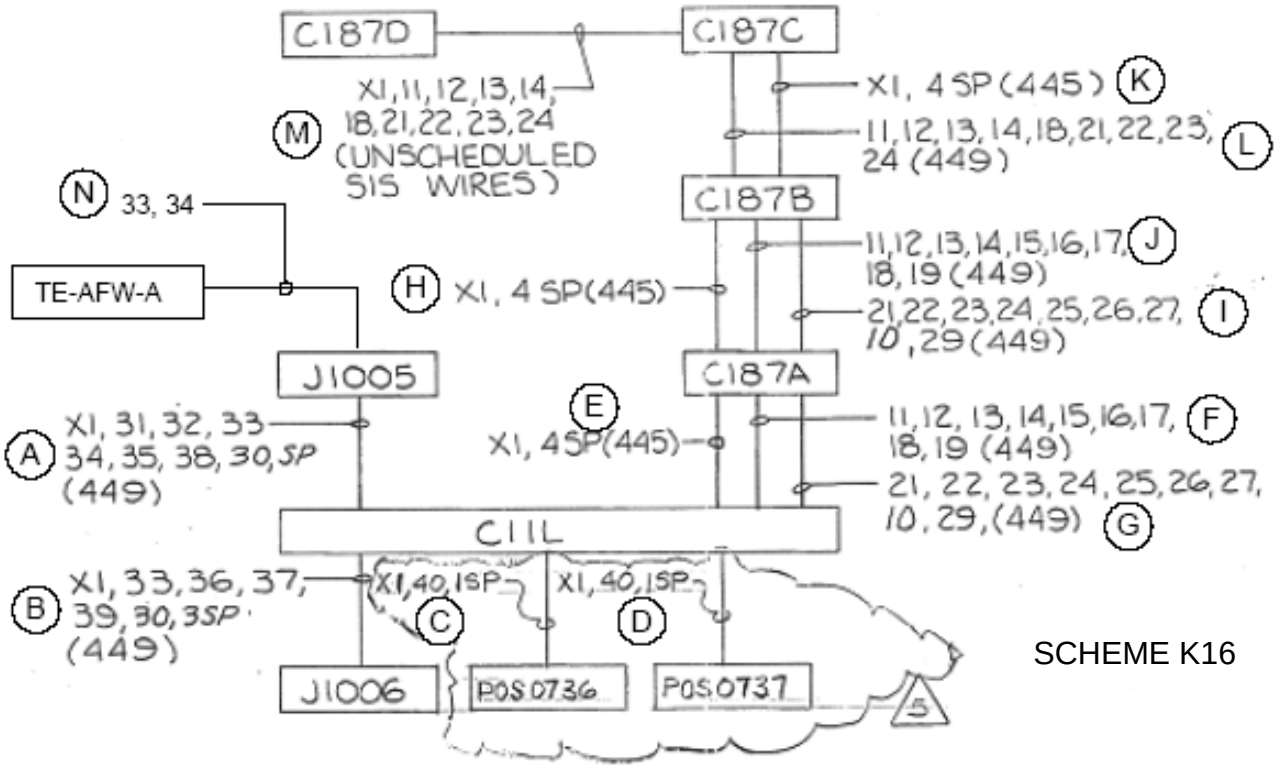

SCHEME K16

Example No.	Title	Drawing No.
11	ANN-1 Elementary Diagram	E-11-1
Normal Position	**Failed Position**	**Function State**
AVAILABLE	Elec: UNAVAILABLE Air: N/A	AVAILABLE – NON-SPURIOUS