LOOP DESCRIPTION

PRESSURE TRANSMITTER IPT03006 MONITORS CONDENSER "A" PRESSURE AND PROVIDES A SIGNAL FOR THE PLANT COMPUTER, CONTROL BOARD INDICATOR, AND TO THE WESTINGHOUSE STEAM DUMP CONTROLS.

REFERENCE DOCUMENTS

ICP-140.002, LOOP CALIBRATION PROCEDURE
ICP-240.003, TRANSMITTER CALIBRATION PROCEDURE
IMS-51-332, W 6887003, CONDENSER "A" HOTWELL PRESSURE SCHEMATIC
IMS-61-201-15, W 8756006, SHM12, BOP BLOCK DIAGRAM
D-302-101, FLOW DIAGRAM
F-811-005, INSTRUMENT LOCATION LAYOUT
IMS-28-173-12, TRANSMITTER SPEC SHEET
E-210-044, XPN7134, WIRING DIAGRAM
E-210-212, XPN7033, WIRING DIAGRAM
E-210-283, SHM12, XPN6003, WIRING DIAGRAM
B-209-063, SH*M6101, STEAM DUMP MODE SELECT ELEMENTARY DIAGRAM
B-209-063, SH*M6078, STEAM DUMP VALVE IFV-2017 ELEMENTARY DIAGRAM
B-209-063, SH*M6108, STEAM DUMP VALVE IFV-2117 ELEMENTARY DIAGRAM
IMS-28-026-23, XCP6113, WIRING DIAGRAM
IMS-30-006-18, COMPUTER POINT ASSIGNMENT
S-224-209, SH*G4, MCB DEVICE SHEET P1-3006
TERM SHEET: COUIX, MBJ4X, MBJ58X, MBJ88X, MIJ39X, MBJ7X.

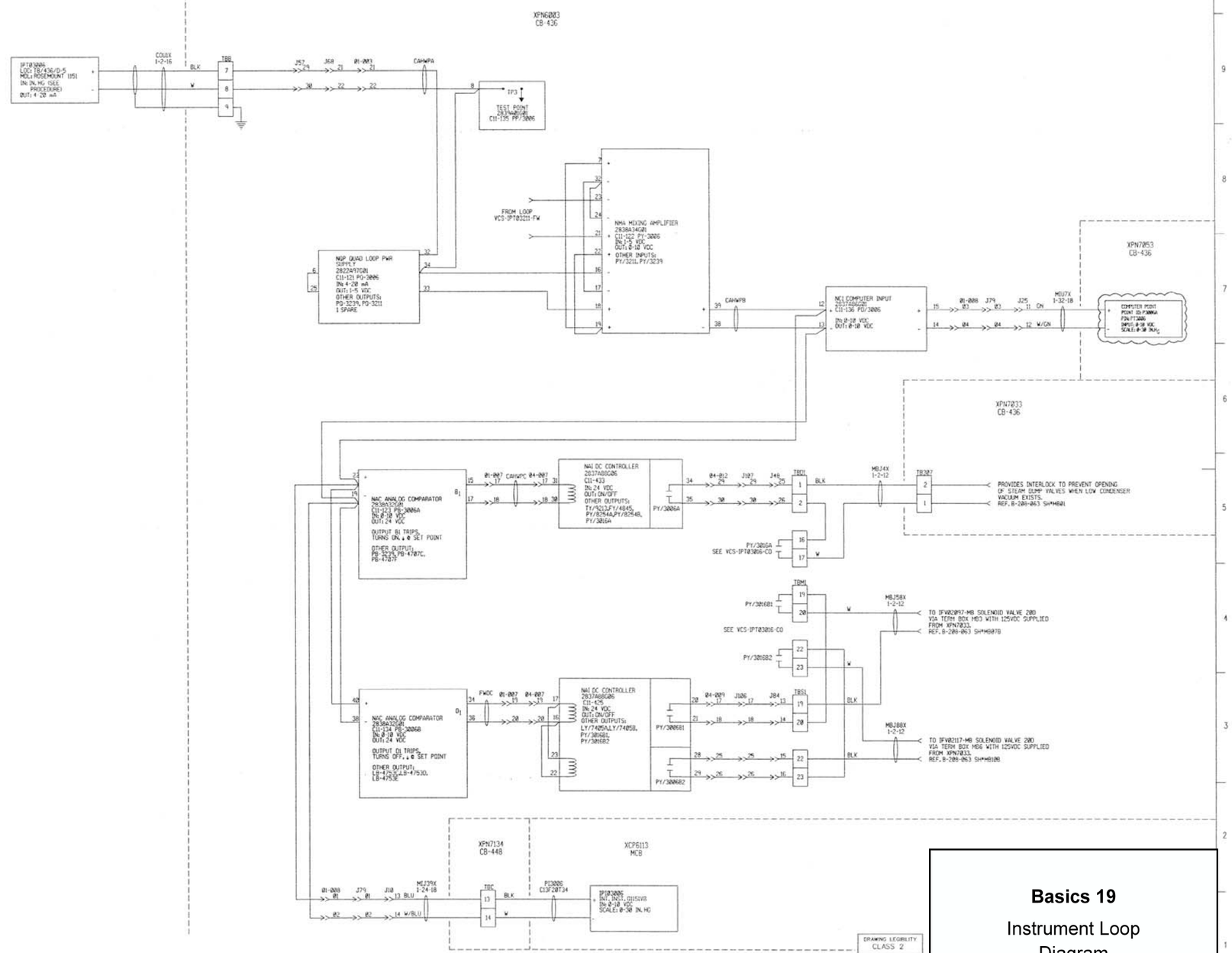

2	09-16-94	LCK	REVISED PER CCCS-94-0252		TGB	WGR	LE K
1	03-11-93	JAC	REVISED PER CCCS-93-0078		SDW	DCW	CHAN
NO	DATE	BY	REVISION		IN	CH	A

Basics 19

Instrument Loop Diagram