Basics 8

MOV Block Diagram

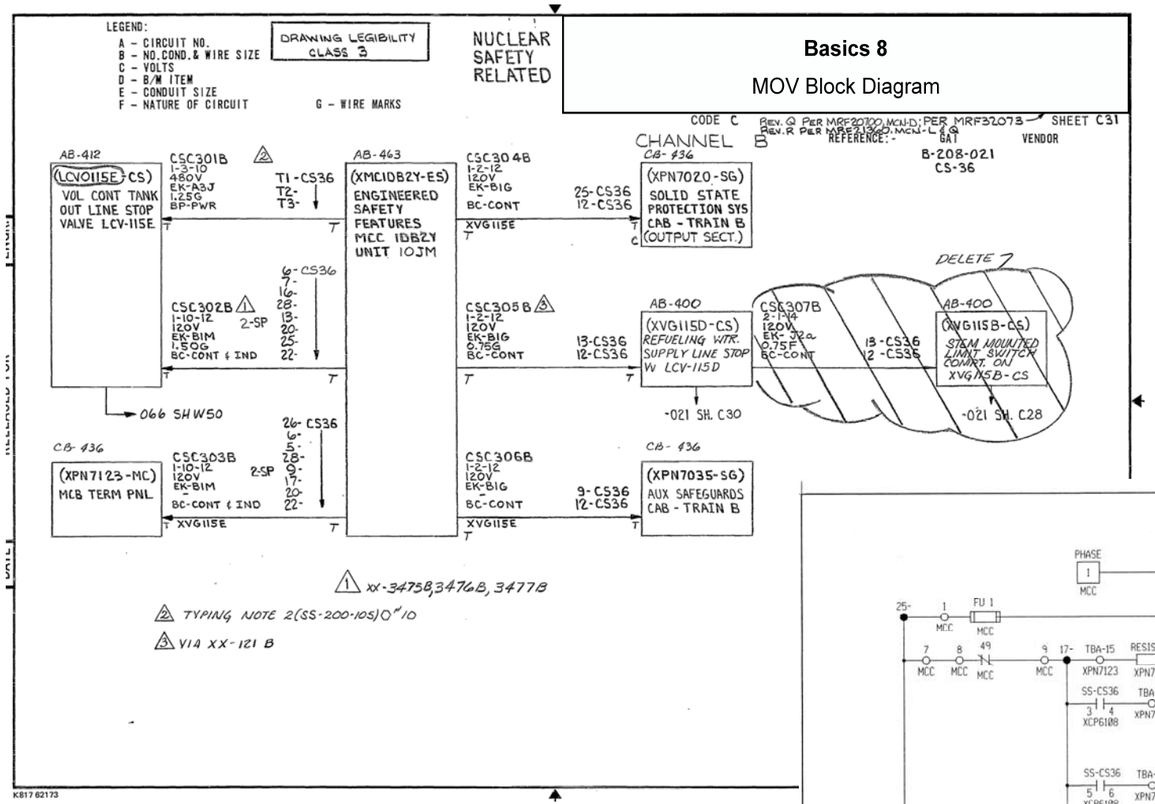

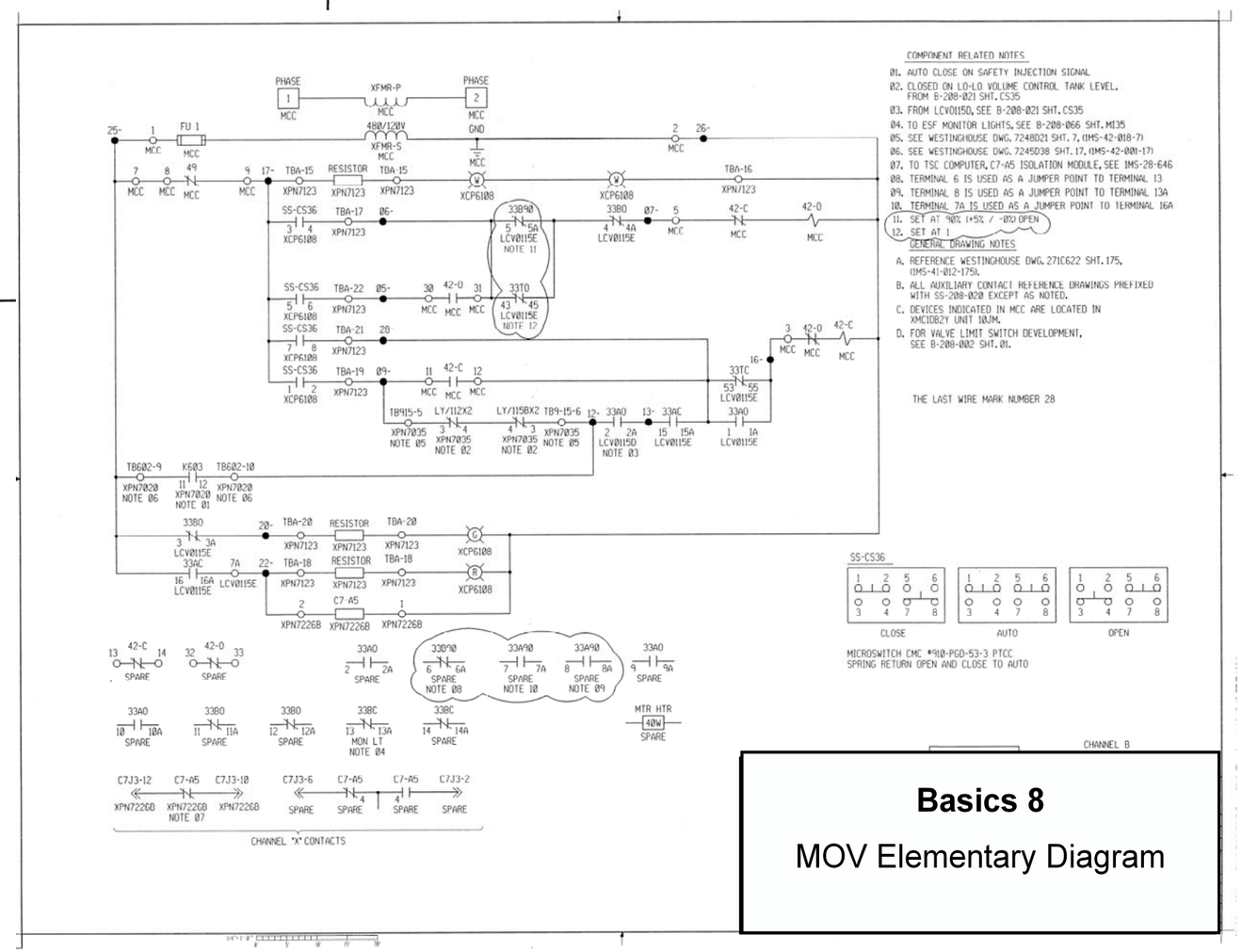

Basics 8

MOV Elementary Diagram