CIRCUIT ANALYSIS WORKSHEET

Component ID: MOV-11 Component Type: MOV

Component Description: Example 5

Normal Position: CLOSED

Failed Electrical Position: AS-IS

Failed Air Position: N/A

Function State:

Initial Position: CLOSED

Desired Position OPEN

BE Code: 11-FTO

High Consequence Component Yes ☐ No ☒

Power Supplies: _____ Breaker: _____ Req'd ☐

_____ Breaker: _____ Req'd ☐

Cable Analysis:

Cable ID	Req'd ?	MHS ?	Fault Consequence	Comments

Cable ID	Req'd ?	MHS ?	Fault Consequence	Comments

Equipment Dependencies:

Comments:

Fault Mode Likelihood Analysis:

Cable ID	Insulation	Raceway	6850 Table	No. Cond	Gnd Cond	Sources	Targets	P (x)

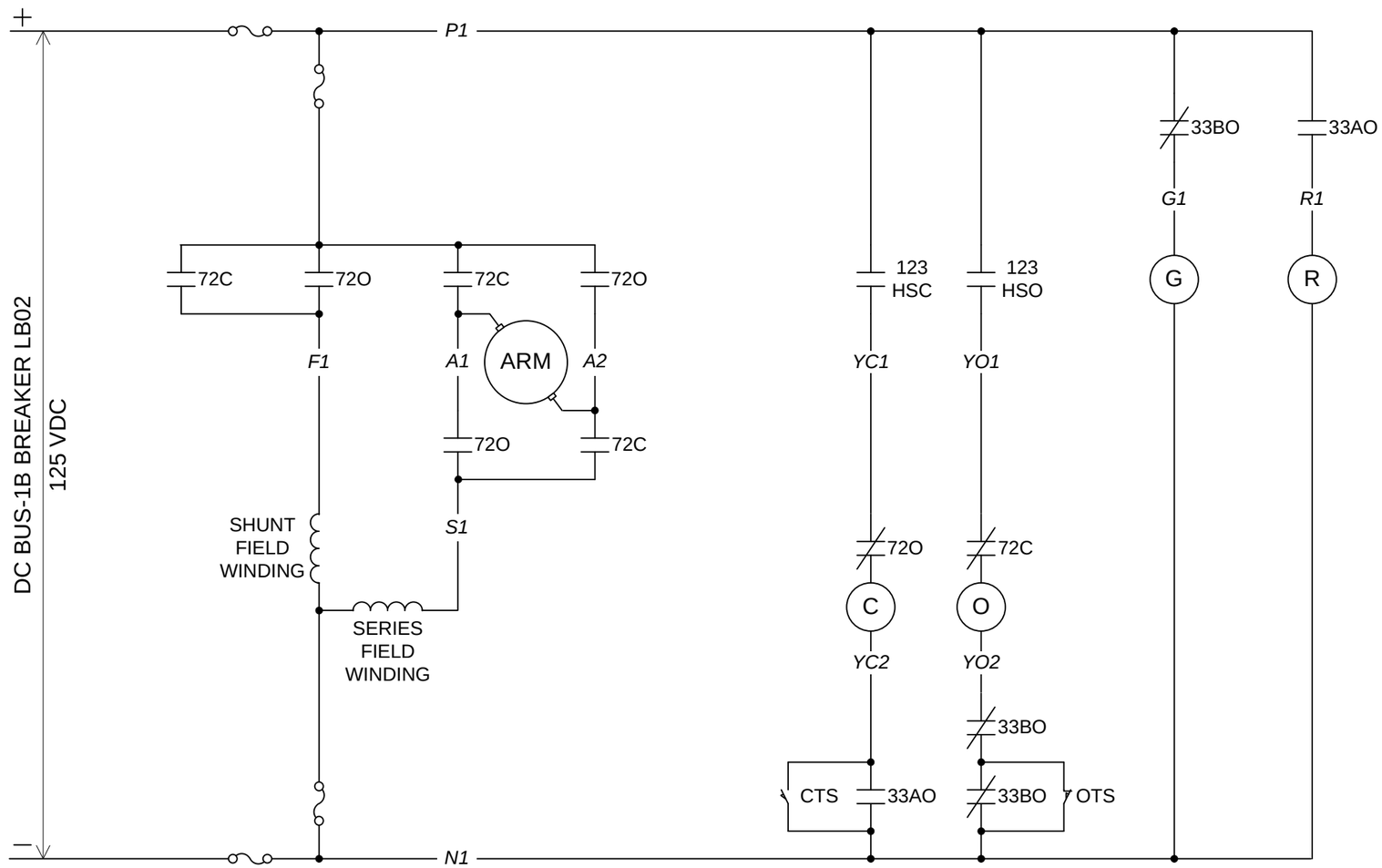

MOV-11, SCHEME DB2

Example No.	Title	Drawing No.
5	MOV-11 Elementary Diagram	E-5-1
Normal Position	Failed Position	Function State
CLOSED	Elec: AS-IS Air: N/A	CLOSED - OPEN

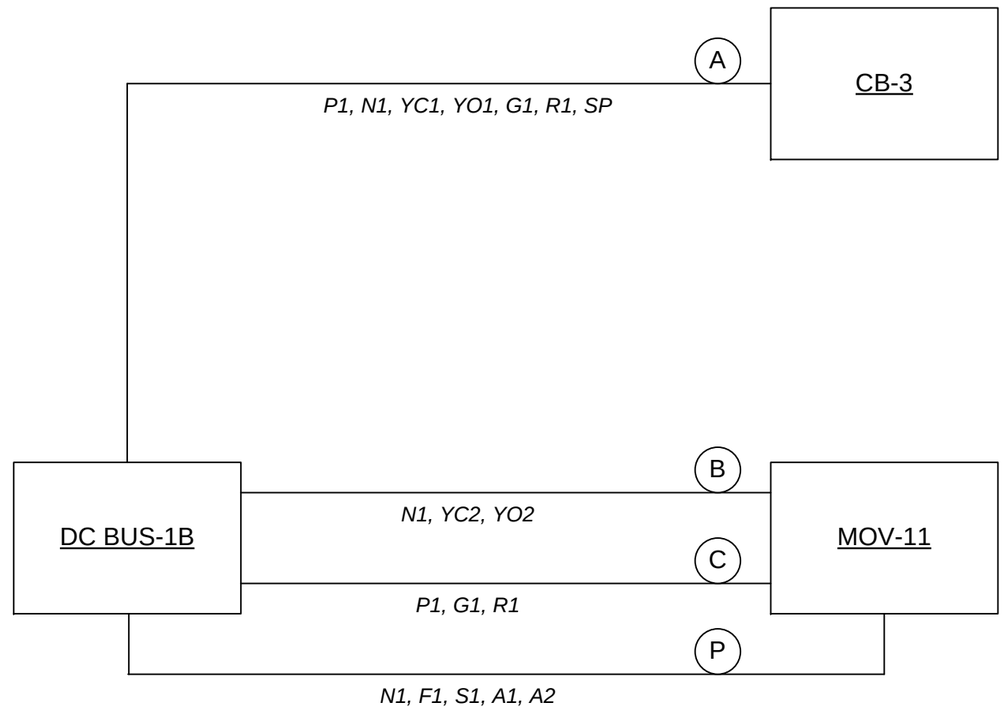

MOV-11
SCHEME DB2

Example No.	Title	Drawing No.
5	MOV-11 Block Diagram	E-5-2
Normal Position	Failed Position	Function State
CLOSED	Elec: AS-IS Air: N/A	CLOSED - OPEN