CIRCUIT ANALYSIS WORKSHEET

Component ID: COMP-1 Component Type: AIR COMPRESSOR

Component Description: Example 13

Normal Position: CYCLE

Failed Electrical Position: OFF

Failed Air Position: N/A

Function State:

Initial Position: CYCLE

Desired Position CYCLE

BE Code: COMP-1 FTR

High Consequence Component Yes ☐ No ☒

Power Supplies: _____ Breaker: _____ Req'd ☐

_____ Breaker: _____ Req'd ☐

Cable Analysis:

Cable ID	Req'd ?	MHS ?	Fault Consequence	Comments

Cable ID	Req'd ?	MHS ?	Fault Consequence	Comments

Equipment Dependencies:

Comments:

Fault Mode Likelihood Analysis:

Cable ID	Insulation	Raceway	6850 Table	No. Cond	Gnd Cond	Sources	Targets	P (x)

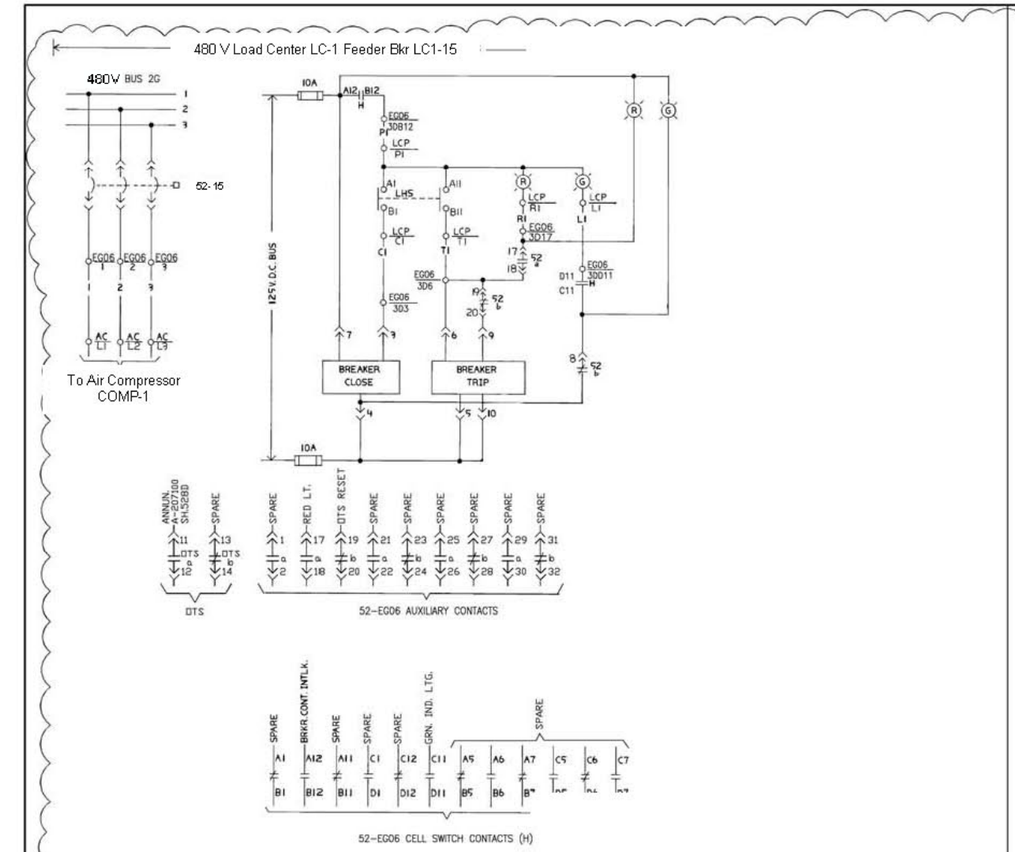

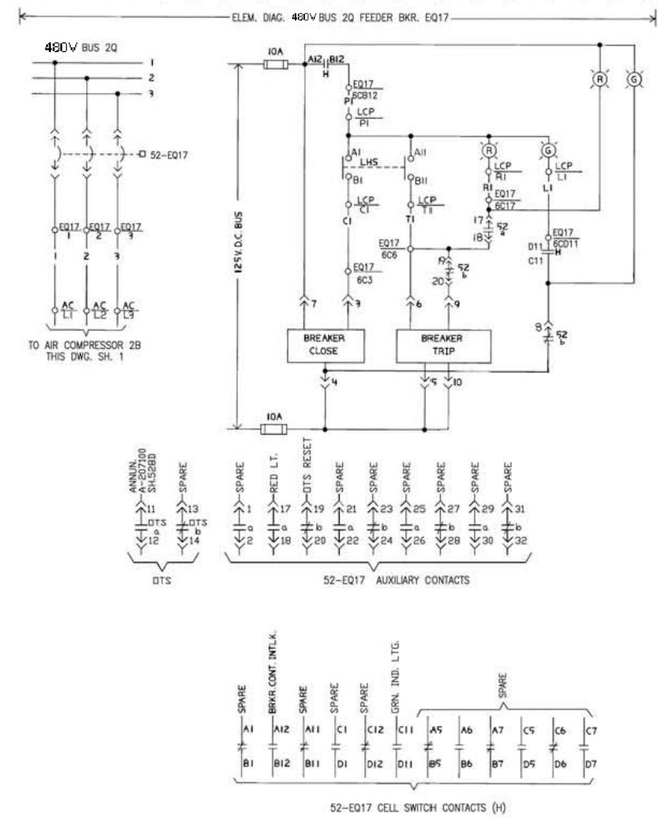

LEGEND

H – TRUCK OPERATED CELL SWITCH SHOWN WITH BREAKER IN TEST POSITION

OTS – OVERCURRENT TRIP SWITCH

REFERENCES:

D-207013, SH.1 SINGLE LINE PROTECTION & METERING 480V LOAD CTR. 2G

D-207676, SH.1 SINGLE LINE PROTECTION & METERING 480V LOAD CTR. 2Q

LOCAL HANDSWITCH (LHS)

BREAKER CONTROL	CONTACT	POSITION 11	12	1	
11 TRIP, 12, 1 CLOSE	A11–B11	X	O	O	BREAKER TRIP
	A12–B12	O	X	O	SPARE
	A1 – B1	O	O	X	BREAKER CLOSE
	A5 – B5	X	O	O	SPARE
	A6 – B6	O	X	O	
	A7 – B7	O	O	X	

WEST. TYPE W2
NAMEPLATE – 502A054H01
HANDLE – 310C624H02
SWITCH – 505A603G01

SPRING RETURN TO NORMAL

LOCAL HANDSWITCH (LHS)

BREAKER CONTROL	CONTACT	POSITION 11	12	1	
11 TRIP, 12, 1 CLOSE	A11–B11	X	O	O	BREAKER TRIP
	A12–B12	O	X	O	SPARE
	A1 – B1	O	O	X	BREAKER CLOSE
	A5 – B5	X	O	O	SPARE
	A6 – B6	O	X	O	
	A7 – B7	O	O	X	

WEST. TYPE W2
NAMEPLATE – 692C707H02
HANDLE – 310C624H02
SWITCH – 505A603G01

SPRING RETURN TO NORMAL

BLOCK DIAGRAM: FACILITY 2U SCHEME NO. YEG06

SEE D-202745, SH.1 FOR ADDITIONAL CABLES USING THIS SCHEME.

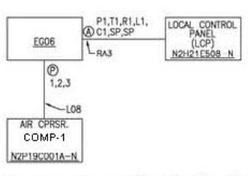

BLOCK DIAGRAM: FACILITY 2U SCHEME NO. YEQ17

SEE THIS DWG., SH.1 FOR ADDITIONAL CABLES USING THIS SCHEME.

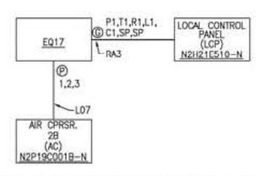

Example No.	Title	Drawing No.
13	COMP-1 Breaker Elementary Diagram	E-13-1
Normal Position	**Failed Position**	**Function State**
CYCLE	Elec: UNAVAILABLE Air: N/A	CYCLE - CYCLE

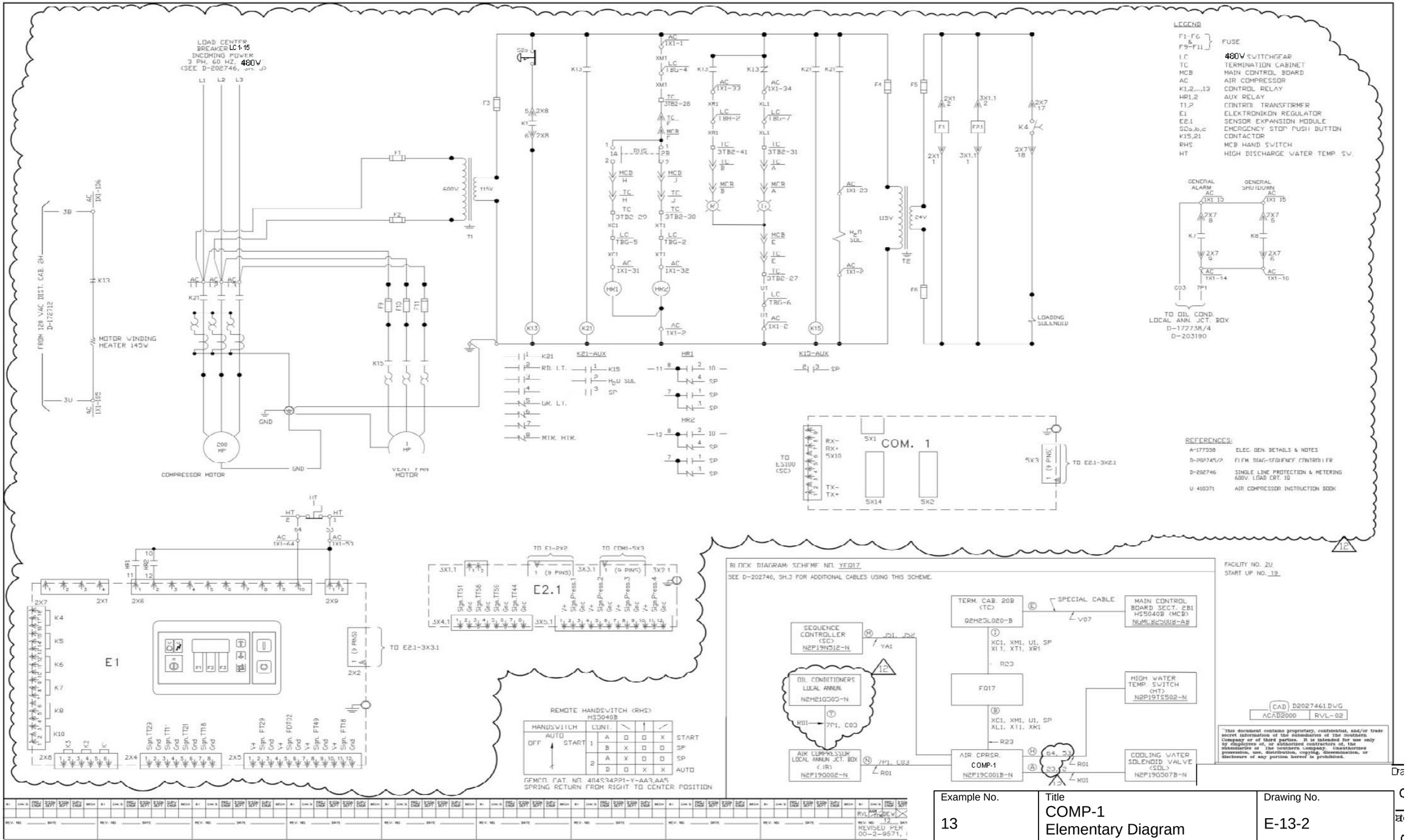

Example No.	Title	Drawing No.
13	COMP-1 Elementary Diagram	E-13-2
Normal Position	Failed Position	Function State
CYCLE	Elec: UNAVAILABLE Air: N/A	CYCLE - CYCLE