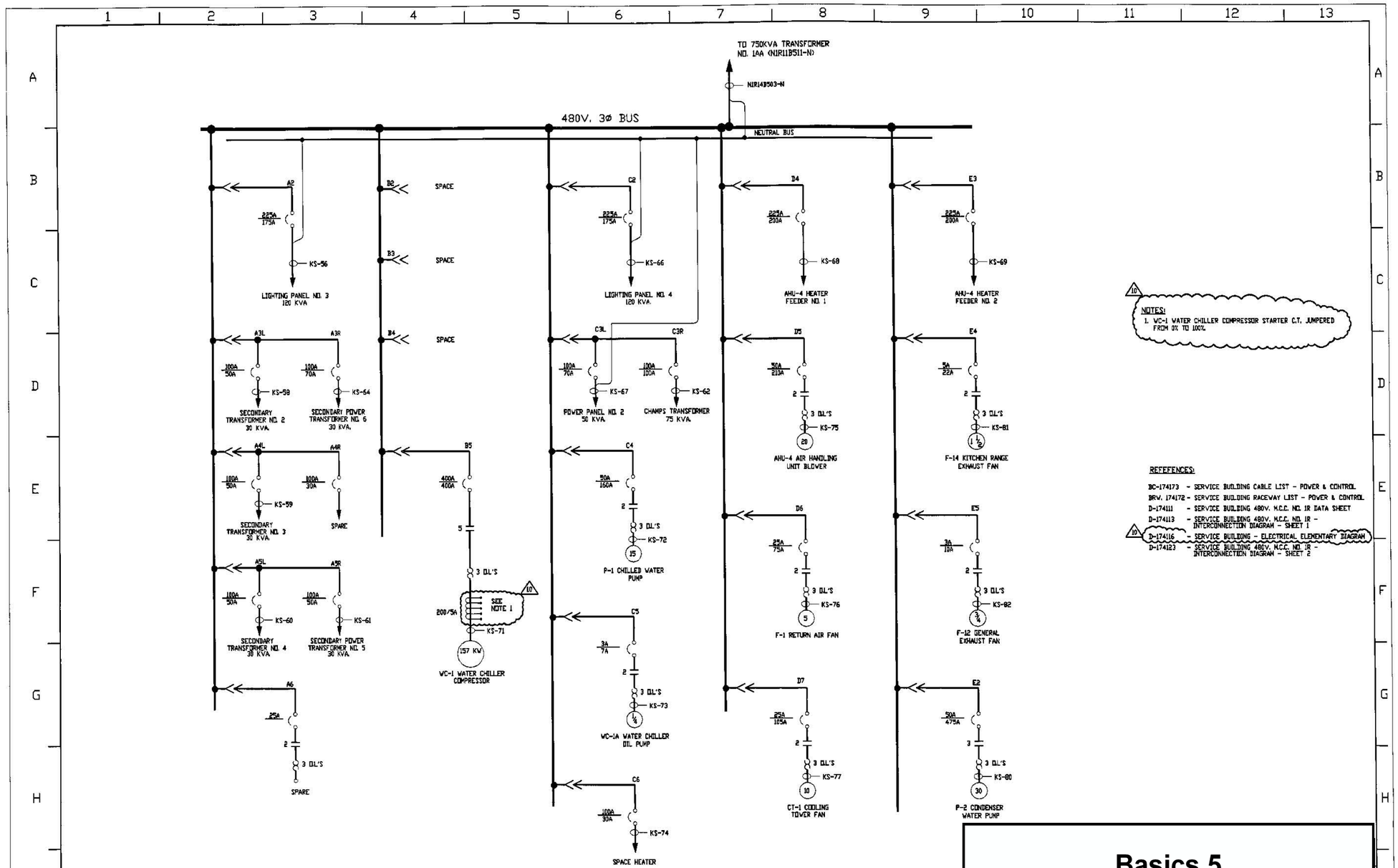

Basics 5

480 V MCC One-Line