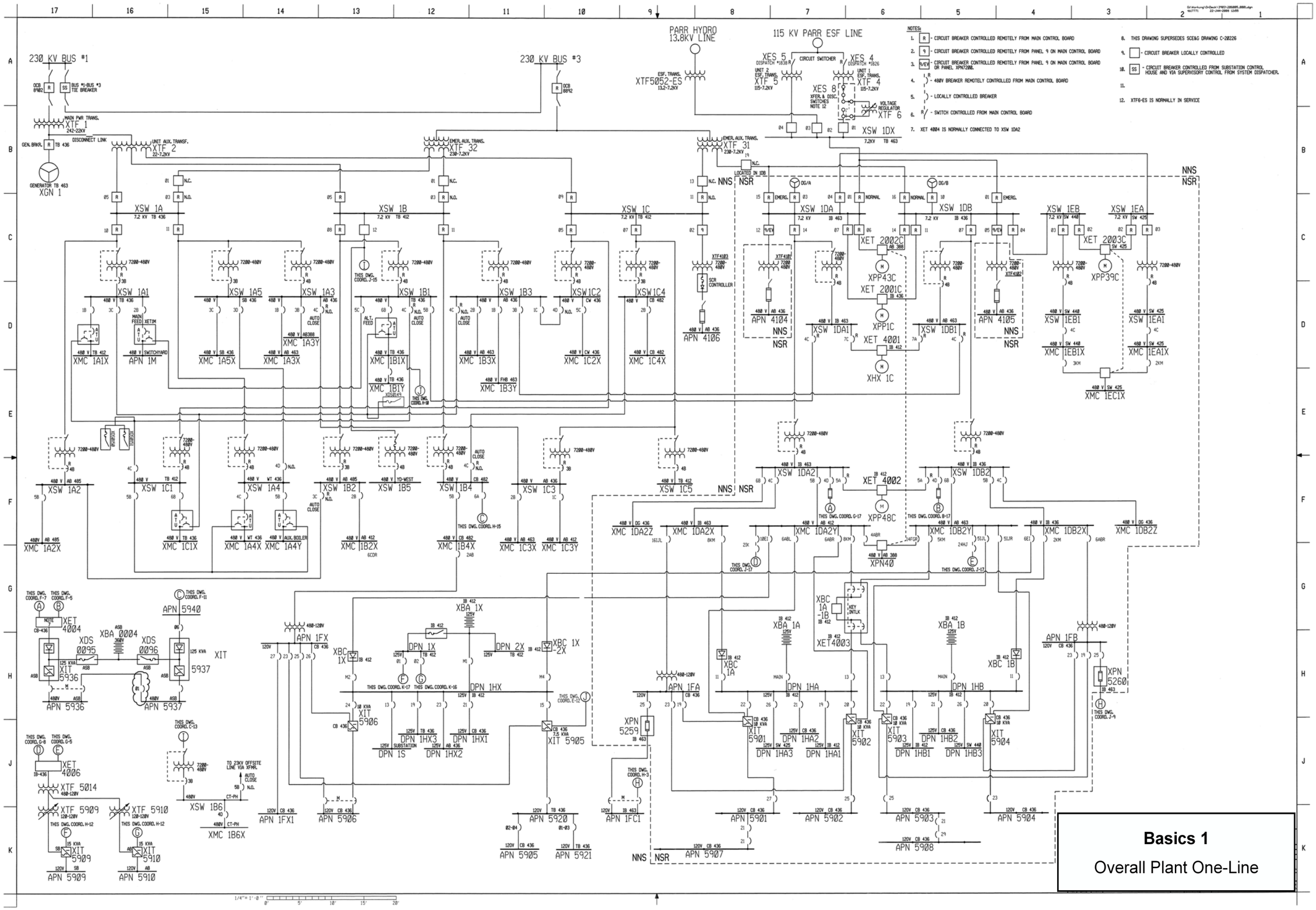
230 KV BUS #1
230 KV BUS #3
PARR HYDRO 13.8KV LINE
115 KV PARR ESF LINE
XTF5052-ES
XES 5
XES 4
XES 8
XTF 5
XTF 4
XTF 6
XSW 1DX
XTF 1
XTF 2
XTF 32
XTF 31
XGN 1
XSW 1A
XSW 1B
XSW 1C
XSW 1DA
XSW 1DB
XSW 1EB
XSW 1EA
XET 2002C
XET 2003C
XET 2001C
XET 4001
XET 4002
XET 4003
XET 4004
XET 4006
XBA 0004
XDS 0095
XDS 0096
APN 5940
APN 5936
APN 5937
APN 1FX
APN 1FA
APN 1FB
APN 5906
APN 5920
APN 5921
APN 5905
APN 5901
APN 5902
APN 5903
APN 5904
APN 5907
APN 5908
APN 5909
APN 5910
APN 1FX1
APN 1FC1
APN 5259
APN 5260
DPN 1HX
DPN 1HA
DPN 1HB
DPN 1S
NNS
NSR
Basics 1
Overall Plant One-Line