EPRI/NRC-RES Fire PRA Course

Revision Date: May 22, 2012

Electric Power Research Institute (EPRI)
3412 Hillview Avenue
Palo Alto, CA 94303

Division of Risk Analysis
Office of Nuclear Regulatory Research (RES)
U.S. Nuclear Regulatory Commission
Washington, DC 20555

PREPARERS

TECHNICAL TEAM LEADS:

Bijan Najafi

Science Applications International Corp.
1671 Dell Ave, Suite 100
Campbell, CA 95008

Steven P. Nowlen

Sandia National Laboratories (SNL)
PO Box 5800
Albuquerque, NM 87185-0748

PROJECT MANAGERS:

Richard Wachowiak

Electric Power Research Institute

J. S. Hyslop

U.S. Nuclear Regulatory Commission
Office of Nuclear Regulatory Research
Fire Research Branch

CONTENTS

1 INTRODUCTION ..... 1-1~~1-1~~

1.1 Background ..... 1-1~~1-1~~

1.2 How to Use this Package ..... 1-4~~1-4~~

1.3 References ..... 1-4~~1-4~~

2 EXAMPLE CASE PLANT - GENERAL INFORMATION ..... 2-1~~2-1~~

2.1 Overall Plant Description ..... 2-1~~2-1~~

2.2 Systems Description ..... 2-1~~2-1~~

2.2.1 Primary Coolant System ..... 2-1~~2-1~~

2.2.2 Chemical Volume Control and High Pressure Injection Systems 2-2

2.2.4 Residual Heat Removal System ..... 2-3~~2-3~~

2.2.5 Auxiliary Feedwater System ..... 2-4~~2-3~~

2.2.6 Electrical System ..... 2-5~~2-5~~

2.2.7 Other Systems ..... 2-5~~2-5~~

2.3 Plant Layout ..... 2-6~~2-6~~

2.4 SNPP Drawings ..... 2-6~~2-6~~

3 MODULE 1: PRA/SYSTEMS ..... 3-1~~3-1~~

4 MODULE 2: ELECTRICAL ANALYSIS ..... 4-1~~4-1~~

5 MODULE 3: FIRE ANALYSIS ..... 5-1~~5-1~~

6 MODULE 4: FIRE PRA HUMAN RELIABILITY ANALYSIS ..... 6-1~~6-1~~

7 MODULE 5: ADVANCED FIRE MODELING 7-2

LIST OF ACRONYMS

AFW	Auxiliary Feedwater
ATWS	Anticipated Transient Without Scram
BWR	Boiling Water Reactor
CCDP	Conditional Core Damage Probability
CF	Cable (Configuration) Factors
CCW	Component Cooling Water
CDF	Core Damage Frequency
CFD	Computational Fluid Dynamics
CFR	Code of Federal Regulations
CLERP	Conditional Large Early Release Probability
CM	Corrective Maintenance
CRS	Cable and Raceway (Database) System
CVCS	Chemical and Volume Control System
EDG	Emergency Diesel Generator
EF	Error Factor
EOP	Emergency Operating Procedure
EPR	Ethylene-Propylene Rubber
EPRI	Electric Power Research Institute
FEDB	Fire Events Database
FEP	Fire Emergency Procedure
FHA	Fire Hazards Analysis
FIVE	Fire-Induced Vulnerability Evaluation (EPRI TR 100370)
FMRC	Factory Mutual Research Corporation
FPRAIG	Fire PRA Implementation Guide (EPRI TR 105928)
FRSS	Fire Risk Scoping Study (NUREG/CR-5088)
FSAR	Final Safety Analysis Report
HEAF	High Energy Arcing Fault
HEP	Human Error Probability
HFE	Human Failure Event
HPI	High Pressure Injection
HPCI	High Pressure Coolant Injection
HRA	Human Reliability Analysis
HRR	Heat Release Rate
HVAC	Heating, Ventilation, and Air Conditioning
ICDP	Incremental Core Damage Probability
ILERP	Incremental Large Early Release Probability

IPE	Individual Plant Examination
IPEEE	Individual Plant Examination of External Events
IS	Ignition Source
ISLOCA	Interfacing Systems Loss of Coolant Accident
KS	Key Switch
LERF	Large Early Release Frequency
LFL	Lower Flammability Limit
LOC	Loss of Control
LOCA	Loss of Coolant Accident
MCC	Motor Control Center
MCR	Main Control Room
MG	Motor-Generator
MOV	Motor Operated Valve
MQH	McCaffrey, Quintiere and Harkleroad's Method
MS	Main Steam
NC	No Consequence
NEI	Nuclear Energy Institute
NEIL	Nuclear Electric Insurance Limited
NFPA	National Fire Protection Association
NPP	Nuclear Power Plant
NPSH	Net Positive Suction Head
NQ cable	Non-Qualified (IEEE-383) cable
NRC	Nuclear Regulatory Commission
P&ID	Piping and Instrumentation Diagram
PE	Polyethylene
PM	Preventive Maintenance
PMMA	Polymethyl Methacrylate
PORV	Power Operated Relief Valve
PRA	Probabilistic Risk Assessment
PSF	Performance Shaping Factor
PVC	Polyvinyl Chloride
PWR	Pressurized Water Reactor
Q cable	Qualified (IEEE-383) cable
RCP	Reactor Coolant Pump
RCS	Reactor Coolant System
RDAT	Computer program for Bayesian analysis
RES	The Office of Nuclear Regulatory Research (at NRC)
RHR	Residual Heat Removal
RPS	Reactor Protection System
RWST	Refueling Water Storage Tank
SDP	Significance Determination Process
SGTR	Steam Generator Tube Rupture
SI	Safety Injection
SO	Spurious Operation
SOV	Solenoid Operated Valve
SRV	Safety Relief Valve

SSD	Safe Shutdown
SSEL	Safe Shutdown Equipment List
SUT	Start-up Transformer
T/G	Turbine/Generator
TGB	Turbine-Generator Building
TSP	Transfer Switch Panel
UAT	Unit Auxiliary Transformer
VCT	Volume Control Tank
VTT	Valtion Teknillinen Tutkimuskeskus (Technical Research Centre of Finland)
XLPE	Cross-Linked Polyethylene
ZOI	Zone of Influence

1
INTRODUCTION

1.1 Background

The U.S. Nuclear Regulatory Commission and Electric Power Research Institute under a Memorandum of Understanding (MOU) on Cooperative Nuclear Safety Research have been developing state of the art methods for conduct of fire PRA. In September 2005, this work produced the "EPRI/NRC-RES Fire PRA Methodology for Nuclear Power Facilities," EPRI 1011989, and NUREG/CR-6850 [1].

A Fire PRA Course has been put together to train interested parties in the application of this methodology. The Course/Seminar is provided in five parallel modules. The first three modules are based directly on Reference [1]. However, that document did not cover fire human reliability analysis (HRA) methods in detail. For 2010, the training materials were enhanced to include a fourth module based on a more recent EPRI/RES collaboration and a draft guidance document, EPRI 1019196, NUREG-1921 [2] published in late 2009. The training materials are based on this draft document including the consideration of public comments received on the draft report and the team's responses to those comments. For 2011 a fifth training module on Advanced Fire Modeling techniques and concepts has been added to the course. This module is based on the another joint RES/EPRI collaboration and a draft guidance published in January 2010, EPRI 1019195, NUREG-1934 [3].

The four training modules are:

- Module 1: PRA/Systems Analysis - This module covers the technical tasks for development of the system response to a fire including human failure events. Specifically, this module covers Tasks/Sections 2, 4, 5, 7, 14, and 15 of Reference [1].
- Module 2: Electrical Analysis – This module covers the technical tasks for analysis of electrical failures as the result of a fire. Specifically, this module covers Tasks/Sections 3, 9, and 10 of Reference [1].
- Module 3: Fire Analysis – This module covers technical tasks involved in development of fire scenarios from initiation to target (e.g., cable) impact. Specifically, this module covers Tasks/Sections 1, 6, 8, 11, and 13 of Reference [1].
- Module 4: Fire Human Reliability Analysis: This module covers the technical tasks associated with identifying and analyzing operator actions and performance during a postulated fire scenario. Specifically, this module covers Task 12 as outlined in Reference [1] based on the application of the approaches documented in Reference [2].

- Module 5: Advanced Fire Modeling: This module is new for the 2011 training course and covers the fundamentals of fire science and provided practical implementation guidance for the application of fire modeling in support of a fire PRA. Module 5 covers fire modeling applications for Tasks 8 and 11 as outlined in Reference [1] based on the material presented in Reference [3].

Integral to Modules 1, 2 and 3 is a set of hands-on problems based on a fictitious, simplified nuclear power plant. The same power plant is used in all three modules. This document provides the background information for the problem sets of each module. Clearly, the power plant defined in this package is an extremely simplified one that in many cases does not meet any regulatory requirements or good engineering practices. Design features presented are focused on bringing forward the various aspects of the Fire PRA methodology. This package includes a general description of the power plant and the internal events PRA needed as input to the Fire PRA.

For Module 4 and 5, independent sets of examples are used to illustrate key points of the analysis procedures. The examples for these two modules are not tied to the simplified plant. Module 4 uses examples that were derived based largely on pilot applications of the proposed fire HRA methods and on independent work of the EPRI and RES HRA teams. The examples for Module 5 were taken directly from Reference [3] and represent a range of typical NPP fire scenarios across a range of complexity and that highlight some of the computation challenges associated with the NPP fire PRA fire modeling applications.

The instruction package for specific technical tasks is provided in Sections 3, 4, 5 and 6 which are organized by Modules (see above). A short description of the Fire PRA technical tasks is provided below. For further details, refer to the individual task descriptions in EPRI 1011989, NUREG/CR-6850, Volume 2. The figure presented at the end of this chapter provides a simplified flow chart for the analysis process and indicates which training module covers each of the analysis tasks.

- ***Plant Boundary Definition and Partitioning (Task 1).*** The first step in a Fire PRA is to define the physical boundary of the analysis, and to divide the area within that boundary into analysis compartments.
- ***Fire PRA Component Selection (Task 2).*** The selection of components that are to be credited for plant shutdown following a fire is a critical step in any Fire PRA. Components selected would generally include many, but not necessarily all components credited in the 10 CFR 50 Appendix R post-fire SSD analysis. Additional components will likely be selected, potentially including most but not all components credited in the plant's internal events PRA. Also, the proposed methodology would likely introduce components beyond either the 10 CFR 50 Appendix R list or the internal events PRA model. Such components are often of interest due to considerations of multiple spurious actuations that may threaten the credited functions and components; as well as due to concerns about fire effects on instrumentation used by the plant crew to respond to the event.
- ***Fire PRA Cable Selection (Task 3).*** This task provides instructions and technical considerations associated with identifying cables supporting those components selected in Task 2. In previous Fire PRA methods (such as EPRI FIVE and Fire PRA Implementation

Guide) this task was relegated to the SSD analysis and its associated databases. This document offers a more structured set of rules for selection of cables.

- ***Qualitative Screening (Task 4).*** This task identifies fire analysis compartments that can be shown to have little or no risk significance without quantitative analysis. Fire compartments may be screened out if they contain no components or cables identified in Tasks 2 and 3, and if they cannot lead to a plant trip due to either plant procedures, an automatic trip signal, or technical specification requirements.
- ***Plant Fire-Induced Risk Model (Task 5).*** This task discusses steps for the development of a logic model that reflects plant response following a fire. Specific instructions have been provided for treatment of fire-specific procedures or preplans. These procedures may impact availability of functions and components, or include fire-specific operator actions (e.g., self-induced-station-blackout).
- ***Fire Ignition Frequency (Task 6).*** This task describes the approach to develop frequency estimates for fire compartments and scenarios. Significant changes from the EPRI FIVE method have been made in this task. The changes generally relate to use of challenging events, considerations associated with data quality, and increased use of a fully component-based ignition frequency model (as opposed to the location/component-based model used, for example, in FIVE).
- ***Quantitative Screening (Task 7).*** A Fire PRA allows the screening of fire compartments and scenarios based on their contribution to fire risk. This approach considers the cumulative risk associated with the screened compartments (i.e., the ones not retained for detailed analysis) to ensure that a true estimate of fire risk profile (as opposed to vulnerability) is obtained.
- ***Scoping Fire Modeling (Task 8).*** This step provides simple rules to define and screen fire ignition sources (and therefore fire scenarios) in an unscreened fire compartment.
- ***Detailed Circuit Failure Analysis (Task 9).*** This task provides an approach and technical considerations for identifying how the failure of specific cables will impact the components included in the Fire PRA SSD plant response model.
- ***Circuit Failure Mode Likelihood Analysis (Task 10).*** This task considers the relative likelihood of various circuit failure modes. This added level of resolution may be a desired option for those fire scenarios that are significant contributors to the risk. The methodology provided in this document benefits from the knowledge gained from the tests performed in response to the circuit failure issue.
- ***Detailed Fire Modeling (Task 11).*** This task describes the method to examine the consequences of a fire. This includes consideration of scenarios involving single compartments, multiple fire compartments, and the main control room. Factors considered include initial fire characteristics, fire growth in a fire compartment or across fire compartments, detection and suppression, electrical raceway fire barrier systems, and damage from heat and smoke. Special consideration is given to turbine generator (T/G) fires, hydrogen fires, high-energy arcing faults, cable fires, and main control board (MCB) fires. There are considerable improvements in the method for this task over the EPRI FIVE and Fire PRA Implementation Guide in nearly all technical areas.

- ***Post-Fire Human Reliability Analysis (Task 12).*** This task considers operator actions for manipulation of plant components. The analysis task procedure provides structured instructions for identification and inclusion of these actions in the Fire PRA. The procedure also provides instructions for incorporating human error probabilities (HEPs) into the fire PRA analysis. (Note that NUREG/CR-6850, EPRI 1011989 did not develop a detailed fire HRA methodology. Fire-specific HRA guidance can be found in NUREG-1921, EPRI 1019196, *EPRI/NRC-RES Fire Human Reliability Analysis Guidelines – Draft Report for Comment,* November 2009. Publication of the final Fire HRA report remains pending.)
- ***Seismic Fire Interactions (Task 13).*** This task is a qualitative approach to help identify the risk from any potential interactions between an earthquake and fire.
- ***Fire Risk Quantification (Task 14).*** The task summarizes what is to be done for quantification of the fire risk results.
- ***Uncertainty and Sensitivity Analyses (Task 15).*** This task describes the approach to follow for identifying and treating uncertainties throughout the Fire PRA process. The treatment may vary from quantitative estimation and propagation of uncertainties where possible (e.g., in fire frequency and non-suppression probability) to identification of sources without quantitative estimation. The treatment may also include one-at-a-time variation of individual parameter values or modeling approaches to determine the effect on the overall fire risk (sensitivity analysis).

1.2 How to Use this Package

This package is intended to provide the background information necessary to perform some of the problem sets of the Course/Seminar. Please note:

1. All Course/Seminar attendees are expected to review Section 2 of this document and become familiar with the power plant defined in that section.
2. The instructors of each module will provide questions or case study problem sets and will guide the attendees to sections relevant to each specific problem set. Attendees will be expected to review those relevant sections and use the information or examples provided in those sections to complete the assigned problem set.
3. Do not make any additional assumptions in terms of equipment, systems, or plant layout other than those presented in the problem package without consulting the instructor.

1.3 References

1. EPRI 1011989, NUREG/CR-6850, *EPRI/NRC-RES Fire PRA Methodology for Nuclear Power Facilities*, September 2005.

2. EPRI 1019196, NUREG-1921, *EPRI/NRC-RES Fire Human Reliability Analysis Guidelines – Draft Report for Comment*, Technical Update, November 2009.

3. EPRI 1019195, NUREG-1934, *Nuclear Power Plant Fire Modeling Application Guide – Draft Report for Comment*, January 2010.

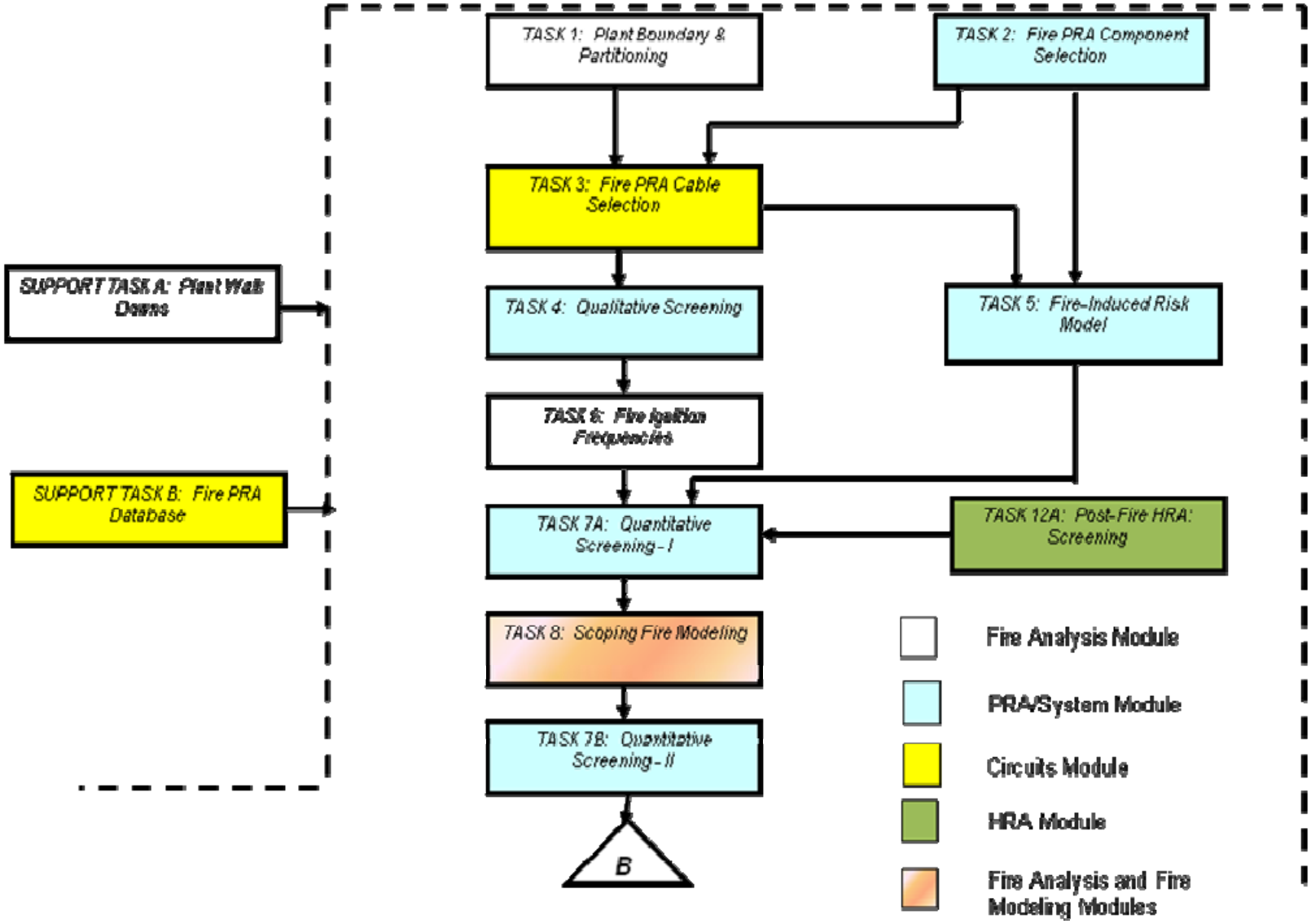
TASK 1: Plant Boundary & Partitioning
TASK 2: Fire PRA Component Selection
TASK 3: Fire PRA Cable Selection
TASK 4: Qualitative Screening
TASK 5: Fire-Induced Risk Model
TASK 6: Fire Ignition Frequencies
TASK 7A: Quantitative Screening - I
TASK 12A: Post-Fire HRA: Screening
TASK 8: Scoping Fire Modeling
TASK 7B: Quantitative Screening - II
B
SUPPORT TASK A: Plant Walk Downs
SUPPORT TASK B: Fire PRA Database
Fire Analysis Module
PRA/System Module
Circuits Module
HRA Module
Fire Analysis and Fire Modeling Modules

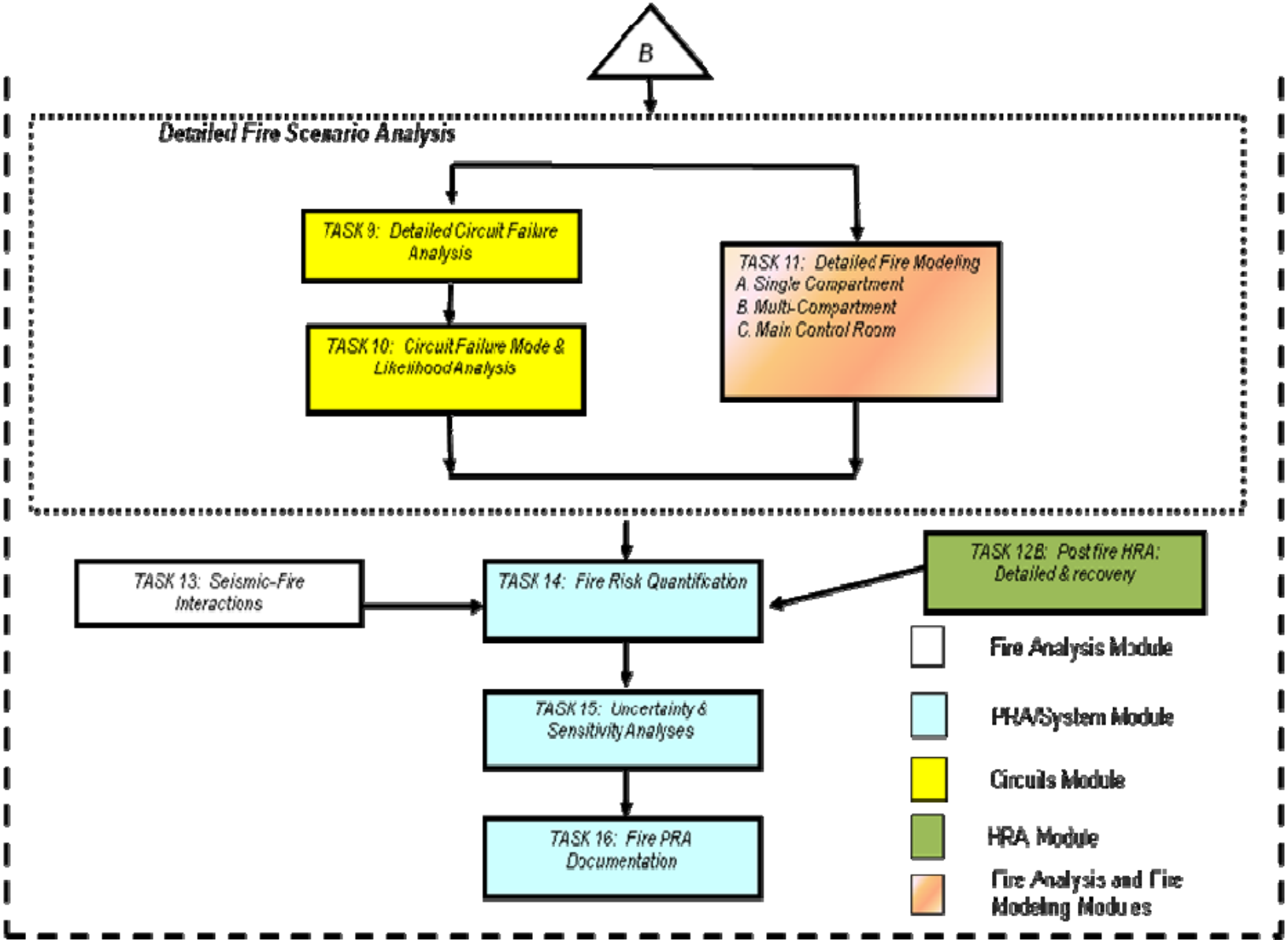
B
Detailed Fire Scenario Analysis
TASK 9: Detailed Circuit Failure Analysis
TASK 10: Circuit Failure Mode & Likelihood Analysis
TASK 11: Detailed Fire Modeling
A. Single Compartment
B. Multi-Compartment
C. Main Control Room
TASK 13: Seismic-Fire Interactions
TASK 14: Fire Risk Quantification
TASK 12B: Postfire HRA: Detailed & recovery
TASK 15: Uncertainty & Sensitivity Analyses
TASK 16: Fire PRA Documentation
Fire Analysis Module
PRA/System Module
Circuits Module
HRA Module
Fire Analysis and Fire Modeling Modules

2
EXAMPLE CASE PLANT - GENERAL INFORMATION

2.1 Overall Plant Description

This chapter provides background information about the fictitious plant used in the hands-on problem sets of Modules 1, 2 and 3. Note that the examples used in Module 4 (HRA) are not based on the example case plant.

The following notes generally describe the example case plant, including its layout:

1. The plant is a Pressurized Water Reactor (PWR) consisting of one Primary Coolant Loop, which consists of one Steam Generator, one Reactor Coolant Pump and the Pressurizer. A Chemical Volume Control System and multiple train High Pressure Injection system, as well as a single train Residual Heat Removal system interface with the primary system
2. The secondary side of the plant contains a Main Steam and Feedwater loop associated with the single Steam Generator, and a multiple train Auxiliary Feedwater System to provide decay heat removal.
3. The operating conditions and parameters of this plant are similar to that of a typical PWR. For example, the primary side runs at about 2,200 psi pressure. The steam generator can reject the decay heat after a reactor trip. There is a possibility for feed and bleed.
4. It is assumed that the reactor is initially at 100% power.
5. The plant is laid out in accordance with Figures 1 through 9. The plant consists of a Containment Building, Auxiliary Building, Turbine Building, Diesel Generator Building and the Yard. All other buildings and plant areas are shown but no details are provided.

2.2 Systems Description

This section provides a more detailed description of the various systems within the plant and addressed in the case studies. Each system is described separately.

2.2.1 Primary Coolant System

The following notes and Figure 10 define the Primary Coolant System:

1. The Primary Coolant Loop consists of the Reactor Vessel, one Reactor Coolant Pump, and one Steam Generator and the Pressurizer, along with associated piping.

2. The Pressurizer is equipped with a normally closed Power Operated Relief Valve (PORV), which is an air operated valve (AOV-1) with its pilot solenoid operated valve (SOV-1). There is also a normally open motor operated block valve (MOV-13) upstream of the PORV.
3. The Pressure Transmitter (PT-1) on the pressurizer provides the pressure indication for the Primary Coolant System and is used to signal a switch from Chemical Volume Control System (CVCS) to High Pressure Injection (HPI) configuration. That is, PT-1 provides the automatic signal for high pressure injection on low RCS pressure. It also provides the automatic signal to open the PORV on high RCS pressure.
4. A nitrogen bottle provides the necessary pressurized gas to operate the PORV in case of loss of plant air but does not have sufficient capacity to support long-term operation.

2.2.2 Chemical Volume Control and High Pressure Injection Systems

The following notes and Figure 10 define the shared CVCS and HPI System:

1. The CVCS normally operates during power generation.
2. Valve type and position information include:

Valve	Type	Status on Loss of Power (or Air as applicable)	Position During Normal Operation	Motor Power (hp)
AOV-2	Air Operated Valve	Fail Closed	Open	N/A
AOV-3	Air Operated Valve	Fail Open	Open	N/A
MOV-1	Motor Operated Valve	Fail As Is	Closed	>5
MOV-2	Motor Operated Valve	Fail As Is	Open	<5
MOV-3	Motor Operated Valve	Fail As Is	Closed	<5
MOV-4	Motor Operated Valve	Fail As Is	Closed	<5
MOV-5	Motor Operated Valve	Fail As Is	Closed	<5
MOV-6	Motor Operated Valve	Fail As Is	Closed	>5
MOV-9	Motor Operated Valve	Fail As Is	Closed	>5

3. One of the two HPI pumps runs when the CVCS is operating.
4. One of the two HPI pumps is sufficient to provide all injection needs after a reactor trip and all postulated accident conditions.
5. HPI and CVCS use the same set of pumps.

6. On a need for safety injection, the following lineup takes place automatically:
   - AOV-3 closes
   - MOV-5 and MOV-6 open
   - MOV-2 closes.
   - Both HPI pumps receive start signal, the stand-by pump starts and the operating pump continues operating.
   - MOV-1 and MOV-9 open.
7. HPI supports feed and bleed cooling when all secondary heat removal is unavailable. When there is a low level indication on the steam generator, the operator will initiate feed and bleed cooling by starting the HPI pumps and opening the PORV.
8. HPI is used for re-circulating sump water after successful injection in response to a Loss of Coolant Accident (LOCA) or successful initiation of feed and bleed cooling. For recirculation, upon proper indication of low RWST level and sufficient sump level, the operator manually opens MOV-3 and MOV-4, closes MOV-5 and MOV-6, starts the RHR pump, and aligns CCW to the RHR heat exchanger.
9. RWST provides the necessary cooling water for the HPI pumps during injection. During the recirculation mode, HPI pump cooling is provided by the recirculation water.
10. There are level indications of the RWST and containment sump levels that are used by the operator to know when to switch from high pressure injection to recirculation cooling mode.
11. The Air Compressor provides the motive power for operating the Air Operated Valves but the detailed connections to the various valves are not shown.

2.2.4 Residual Heat Removal System

The following notes and Figure 10 define the Residual Heat Removal (RHR) System:

1. The design pressure of the RHR system downstream of MOV-8 is low.
2. Valve type and position information include:

Valve	Type	Status on Loss of Power	Position During Normal Operation	Motor Power (hp)
MOV-7	Motor Operated Valve	Fail As Is	Closed (breaker racked out)	>5
MOV-8	Motor Operated Valve	Fail As Is	Closed	>5
MOV-20	Motor Operated Valve	Fails As Is	Closed	>5

3. Operators have to align the system for shutdown cooling, after reactor vessel de-pressurization from the control room by opening MOV-7 and MOV-8, turn the RHR pump on and establish cooling in the RHR Heat Exchanger.

2.2.5 Auxiliary Feedwater System

The following notes and Figure 11 define the Auxiliary Feedwater (AFW) System:

1. One of three pumps of the AFW system can provide the necessary secondary side cooling for reactor heat removal after a reactor trip.
2. Pump AFW-A is motor-driven, AFW-B is steam turbine-driven, and AFW-C is diesel-driven.
3. Valve type and position information include:

Valve	Type	Status on Loss of Power	Position During Normal Operation	Motor Power (hp)
MOV-10	Motor Operated Valve	Fail As Is	Closed	>5
MOV-11	Motor Operated Valve	Fail As Is	Closed	>5
MOV-14	Motor Operated Valve	Fail As Is	Closed	<5
MOV-15	Motor Operated Valve	Fail As Is	Closed	<5
MOV-16	Motor Operated Valve	Fail As Is	Closed	<5
MOV-17	Motor Operated Valve	Fail As Is	Closed	<5
MOV-18	Motor Operated Valve	Fail As Is	Closed	>5
MOV-19	Motor Operated Valve	Fail As Is	Closed	<5

4. Upon a plant trip, Main Feedwater isolates and AFW automatically initiates by starting AFW-A and AFW-C pumps, opening the steam valves MOV-14 and MOV-15 to operate the AFW-B steam-driven pump, and opening valves MOV-10, MOV-11, and MOV-18.
5. The CST has sufficient capacity to provide core cooling until cold shutdown is achieved.
6. The test return paths through MOVs-16, 17, and 19 are low flow lines and do not represent significant diversions of AFW flow even if the valves are open
7. There is a high motor temperature alarm on AFW pump A. Upon indication in the control room, the operator is to stop the pump immediately and have the condition subsequently checked by dispatching a local operator.
8. The atmospheric relief valve opens, as needed, automatically to remove decay heat if/should the main condenser path be unavailable.

9. The connections to the Main Turbine and Main Feedwater are shown in terms of one Main Steam Isolation Valve (MSIV) and a check valve. Portions of the plant beyond these interfacing components will not be addressed in the course.
10. Atmospheric dump valve AOV-4 is used to depressurize the steam generator in case of a tube rupture.

2.2.6 Electrical System

Figure 12 is a one-line diagram of the Electrical Distribution System (EDS). Safety related buses are identified by the use of alphabetic letters (e.g., SWGR-A, MCC-B1, etc.) while the non-safety buses use numbers as part of their designations (e.g., SWGR-1 and MCC-2).

The safety-related portions of the EDS include 4160 volt switchgear buses SWGR-A and SWGR-B, which are normally powered from the startup transformer SUT-1. In the event that off-site power is lost, these switchgear receive power from emergency diesel generators EDG-A and EDG-B. The 480 volt safety-related load centers (LC-A and LC-B) receive power from the switchgear buses via station service transformers SST-A and SST-B. The motor control centers (MCC-A1 and MCC-B1) are powered directly from the load centers. The MCCs provide motive power to several safety-related motor operated valves (MOVs) and to DC buses DC BUS-A and DC BUS-B via Battery Chargers BC-A and BC-B. The two 125 VDC batteries, BAT-A and BAT-B, supply power to the DC buses in the event that all AC power is lost. DC control power for the 4160 safety-related switchgear is provided through distribution panels PNL-A and PNL-B. The 120 VAC vital loads are powered from buses VITAL-A and VITAL-B, which in turn receive their power from the DC buses through inverters INV-A and INV-B.

The non-safety portions of the EDS reflect a similar hierarchy of power flow. There are important differences however. For example, 4160 volt SWGR-1 and SWGR-2 are normally energized from the unit auxiliary transformer (UAT-1) with backup power available from SUT-1. A cross-tie breaker allows one non-safety switchgear bus to provide power to the other. Non-safety load centers LC-1 and LC-2 are powered at 480 volts from the 4160 volt switchgear via SST-1 and SST-2. These load centers provide power directly to the non-safety MCCs. The non-vital DC bus (DC BUS-1) can be powered from either MCC via an automatic transfer switch (ATS-1) and battery charger BC-1 or directly from the 125 volt DC battery, BAT-1.

2.2.7 Other Systems

The following systems and equipment are mentioned in the plant description but not explicitly included in the fire PRA:

- Component Cooling Water (CCW) – provides cooling to Letdown Heat Exchanger and the RHR Heat Exchanger– assumed to be available at all times.
- It is assumed that the control rods can successfully insert and shutdown the reactor under all conditions.
- It is assumed that the ECCS and other AFW related instrumentation and control circuits (other than those specifically noted in the diagrams) exist and are perfect such that in all

cases, they would sense the presence of a LOCA or otherwise a need to trip the plant and provide safety injection and auxiliary feedwater by sending the proper signals to the affected components (i.e., close valves and start pumps, insert control rods, etc.).

- Instrument air is required for operation of AOV-1, AOV-2, AOV-3, and AOV-4.

2.3 Plant Layout

The following notes augment the information provided in Figures 1 through 9 (Drawings A-01 through A09):

- The main structures of the plant are as follows:
  - Containment
  - Auxiliary Building
  - Turbine Building
  - Diesel Generator Building
  - Intake Structure
  - Security Building
- In Figure 1 (Drawing A-01), the dashed lines represent the fence that separates two major parts: the Yard and Switchyard.
- Switchyard is located outside the Yard with a separate security access.
- CST, RWST, UAT, Main Transformer and SUT are located in the open in the Yard.
- All walls shown in Figures 1 through 8 (Drawings A-01 through A-08) should be assumed as fire rated.
- All doors shown in Figures 1 through 8 (Drawings A-01 through A-08) should be assumed as fire rated and normally closed.
- Battery rooms A and B are located inside the respective switchgear rooms with 1-hour rated walls, ceilings and doors.
- All cable trays are open type. Vertical cable trays are designated as VCBT and horizontal cable trays as HCBT. For horizontal cable trays, the number following the letters indicate the elevation of the cable tray. For example, HCBT+35A denotes a horizontal cable tray at elevation +35 ft.
- The stairwell in the Aux. Building provides access to all the floors of the building. The doors and walls are fire rated and doors are normally closed.

2.4 SNPP Drawings

The following 12 pages (pages 2-7 through 2-18) provide schematic drawings of the SNPP. Drawings A-01 through A-09 are general physical layout drawings providing plan and elevation views of the plant. These drawings also identify the location of important plant equipment. Drawing A-10 provides a piping and instrumentation diagram (P&ID) for the primary coolant system, and drawing A-11 provides a P&ID for the secondary systems. Drawing A-12 is a simplified one-line diagram of the plant power distribution system.

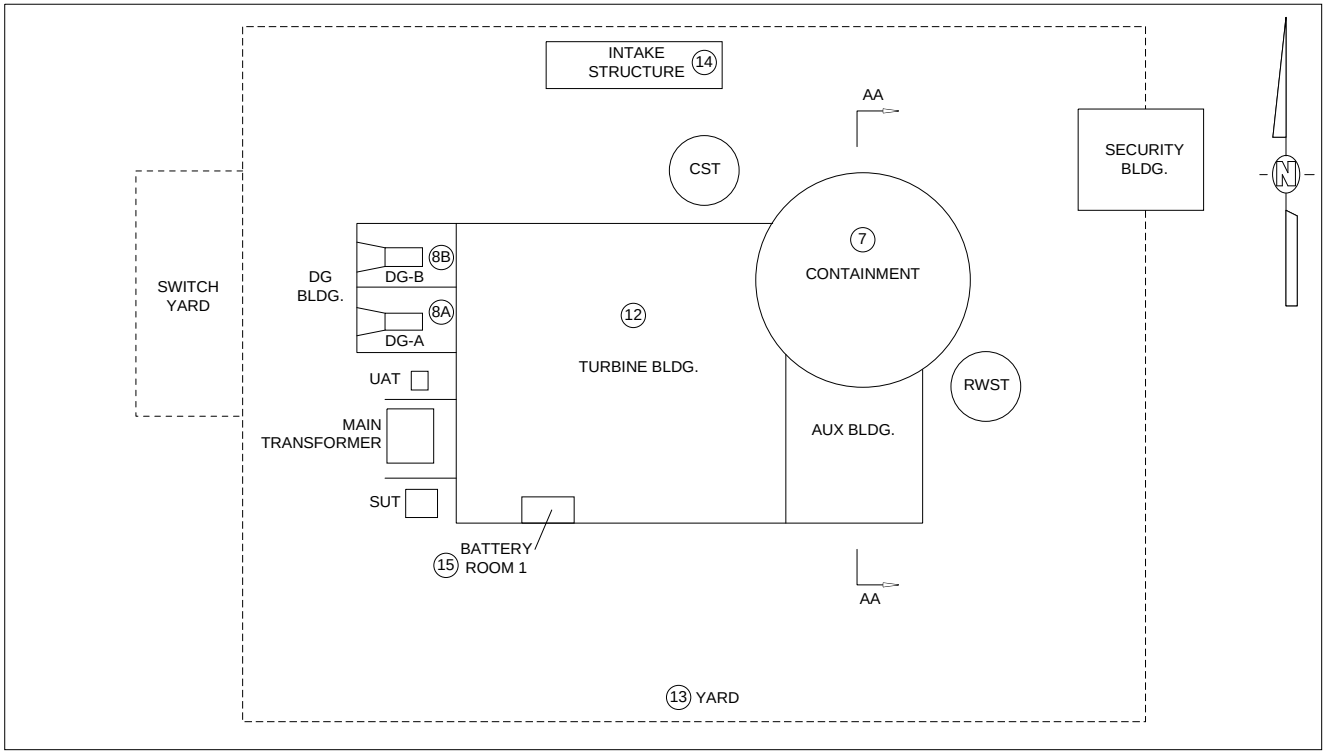

SNPP	Drawing No.: A-01
PLANT LAYOUT	Date: 6/22/09
GENERAL	Revision No.: 1

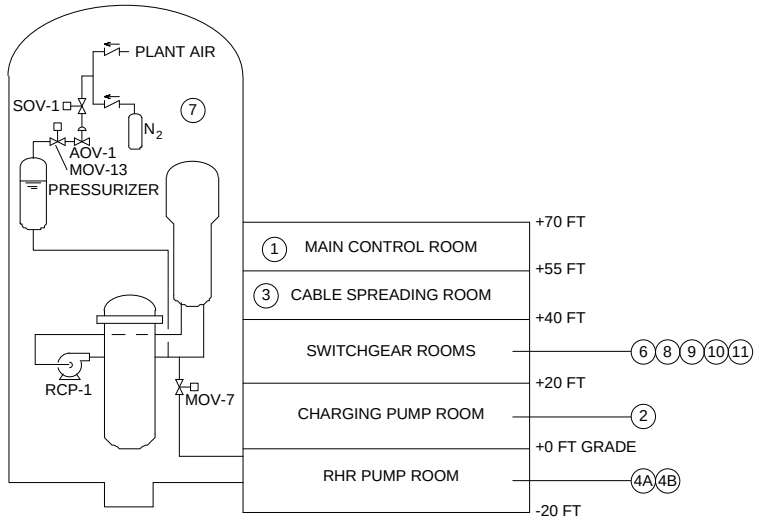

SNPP PLANT LAYOUT SECTION AA	Drawing No.: A-02 Date: 7/21/11 Revision No.: 2

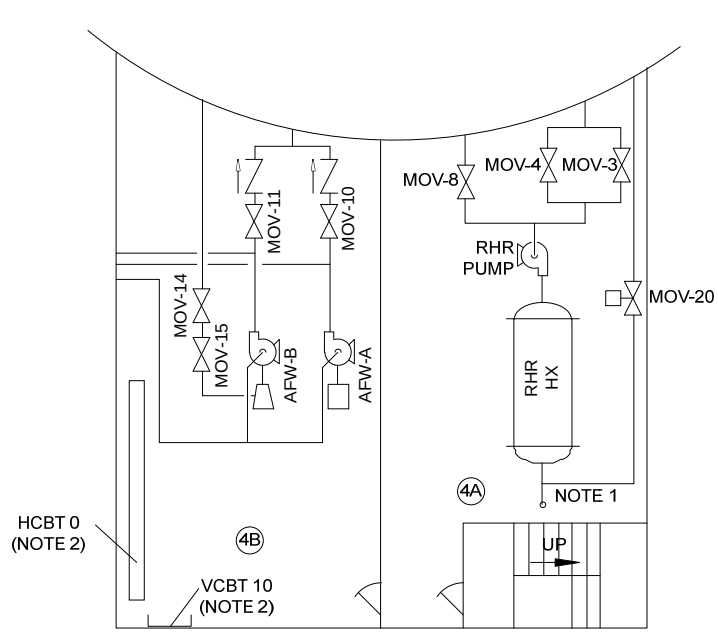

NOTES:

1. VERTICAL PIPE PENETRATION TO UPPER ELEVATION.

2. PENETRATION TO UPPER FLOOR IS SEALED.

HCBT: HORIZONTAL CABLE TRAY
VCBT: VERTICAL CABLE TRAY

SNPP	Drawing No.: A-03
AUX BLDG	Date: 7/21/11
EL. - 20FT	Revision No.: 2

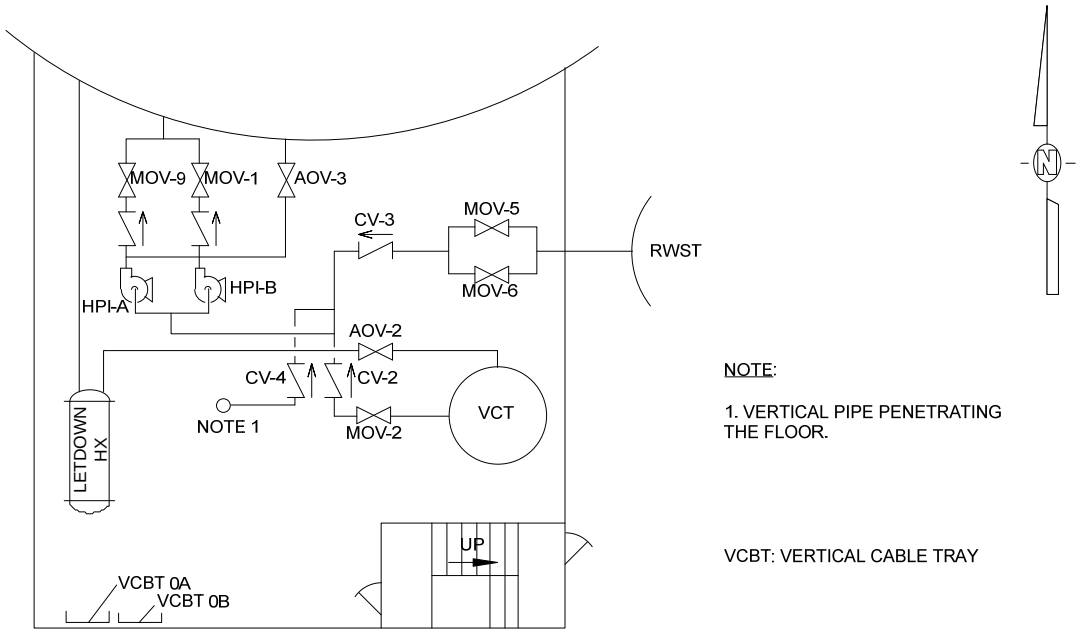

NOTE:

1. VERTICAL PIPE PENETRATING THE FLOOR.

VCBT: VERTICAL CABLE TRAY

SNPP	Drawing No.: A-04
AUX BLDG	Date: 6/22/09
EL. 0FT	Revision No.: 1

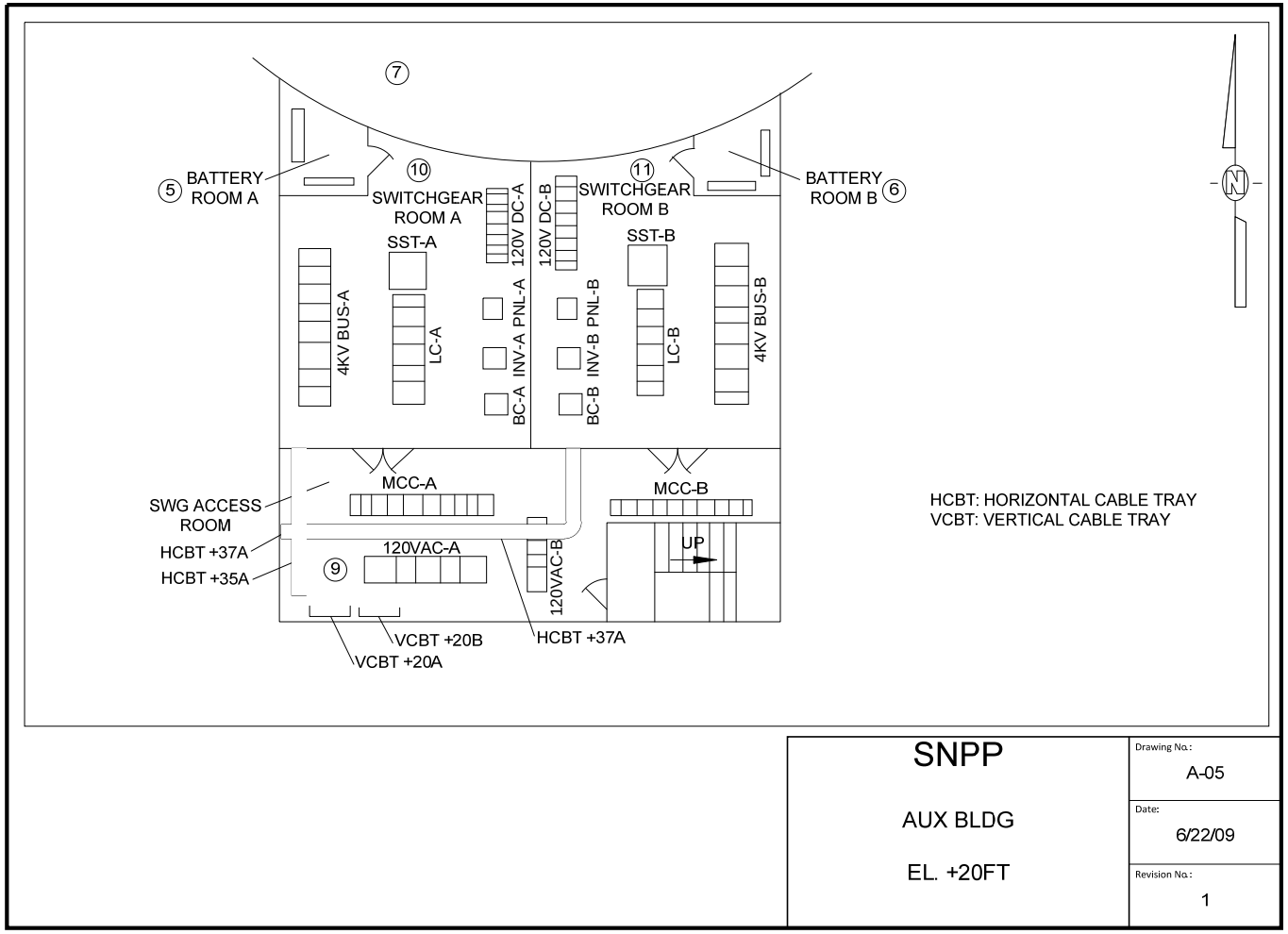

SNPP	Drawing No.: A-05
AUX BLDG	Date: 6/22/09
EL. +20FT	Revision No.: 1

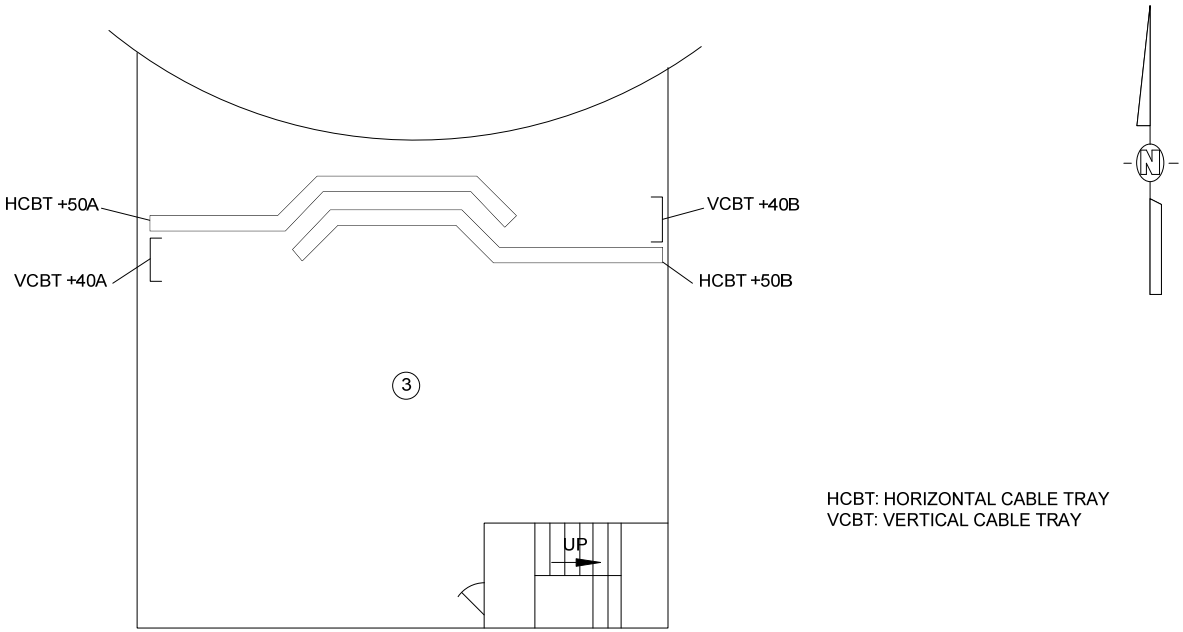

HCBT: HORIZONTAL CABLE TRAY
VCBT: VERTICAL CABLE TRAY

SNPP AUX BLDG EL. +40FT CABLE SPREADING ROOM	Drawing No.: A-06 Date: 6/22/09 Revision No.: 1

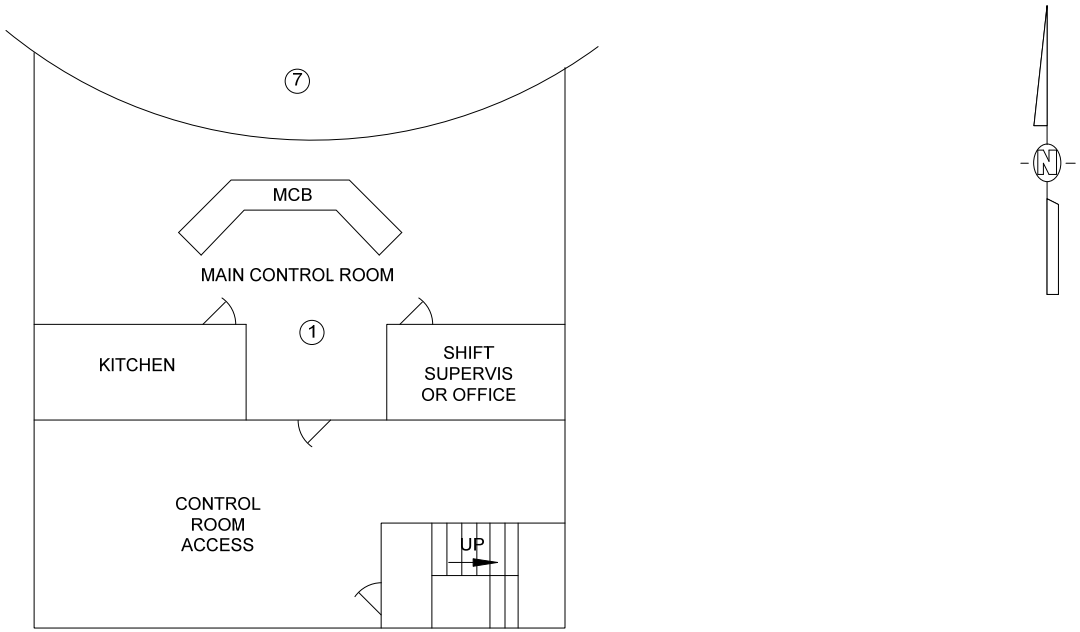

SNPP AUX BLDG MAIN CONTROL ROOM	Drawing No.: A-07 Date: 6/22/09 Revision No.: 1

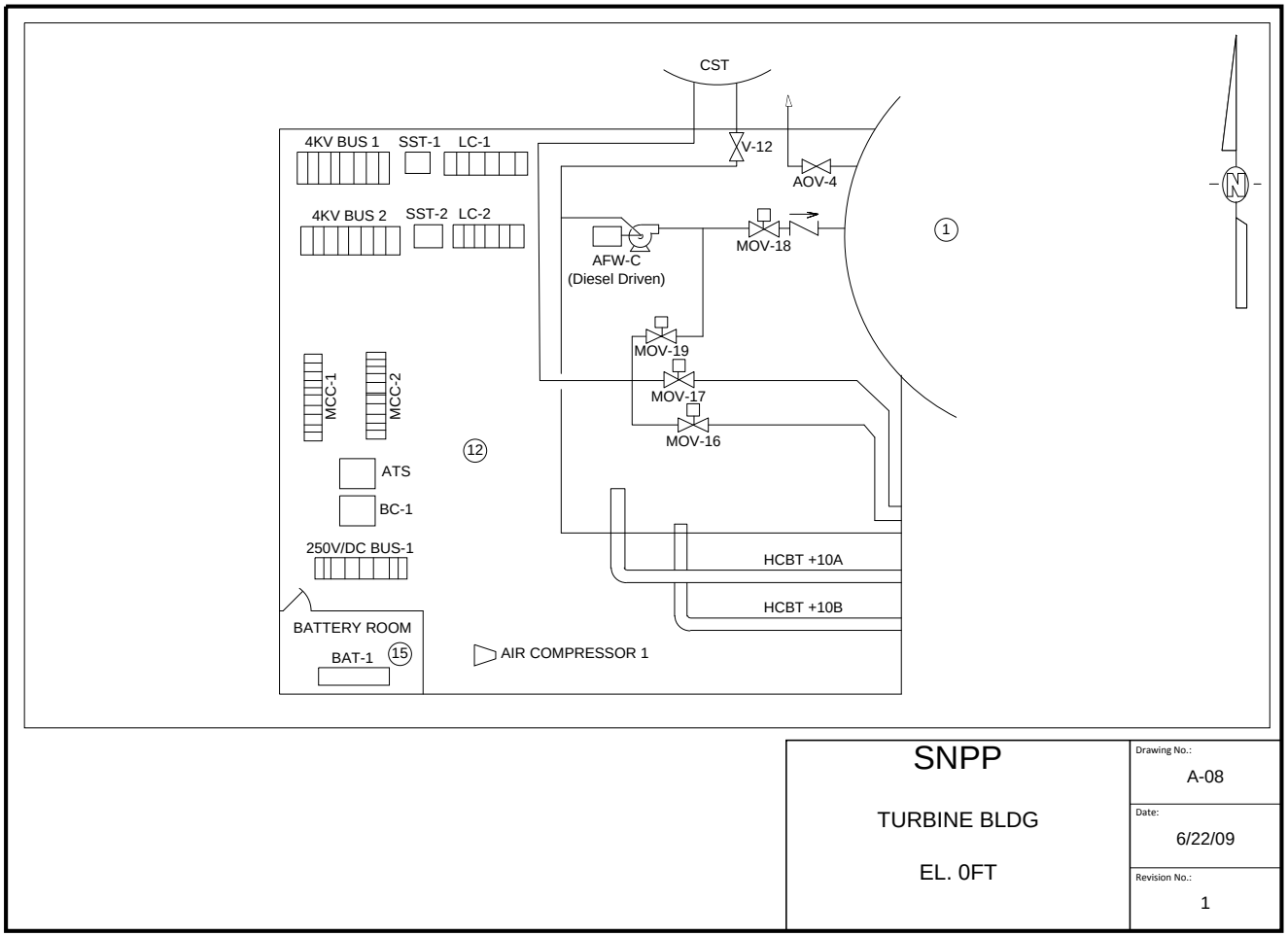
CST
4KV BUS 1
SST-1
LC-1
V-12
AOV-4
4KV BUS 2
SST-2
LC-2
AFW-C
(Diesel Driven)
MOV-18
1
MOV-19
MOV-17
MOV-16
MCC-1
MCC-2
12
ATS
BC-1
250V/DC BUS-1
HCBT +10A
HCBT +10B
BATTERY ROOM
BAT-1
15
AIR COMPRESSOR 1
N
SNPP
TURBINE BLDG
EL. 0FT
Drawing No.:
A-08
Date:
6/22/09
Revision No.:
1

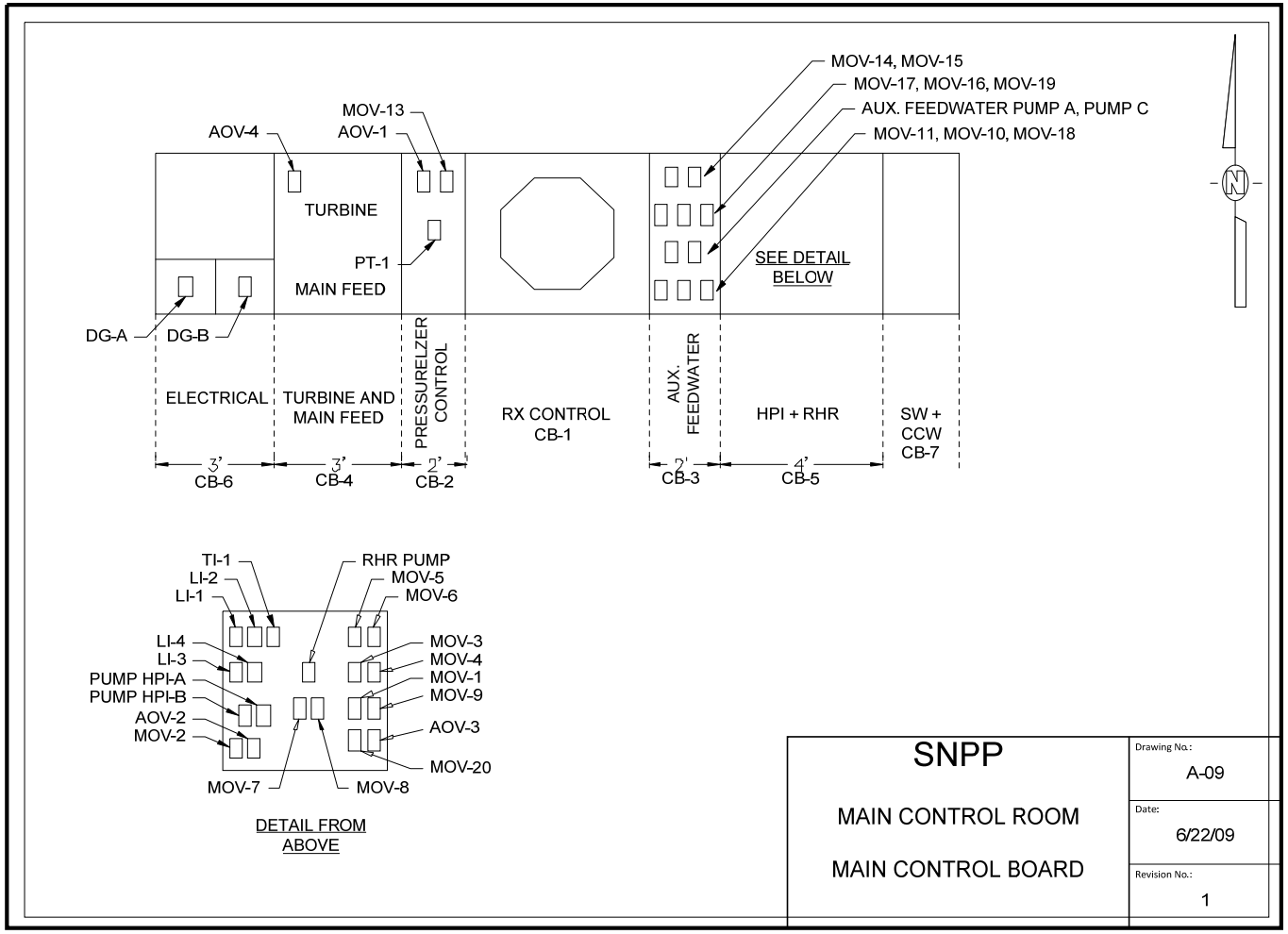
MOV-14, MOV-15
MOV-17, MOV-16, MOV-19
AUX. FEEDWATER PUMP A, PUMP C
MOV-11, MOV-10, MOV-18
MOV-13
AOV-4
AOV-1
TURBINE
PT-1
MAIN FEED
SEE DETAIL BELOW
DG-A
DG-B
ELECTRICAL
TURBINE AND MAIN FEED
PRESSURELZER CONTROL
RX CONTROL CB-1
AUX. FEEDWATER
HPI + RHR
SW + CCW CB-7
3'
CB-6
3'
CB-4
2'
CB-2
2'
CB-3
4'
CB-5
N
TI-1
LI-2
LI-1
RHR PUMP
MOV-5
MOV-6
LI-4
LI-3
PUMP HPI-A
PUMP HPI-B
AOV-2
MOV-2
MOV-3
MOV-4
MOV-1
MOV-9
AOV-3
MOV-20
MOV-7
MOV-8
DETAIL FROM ABOVE
SNPP
MAIN CONTROL ROOM
MAIN CONTROL BOARD
Drawing No.:
A-09
Date:
6/22/09
Revision No.:
1

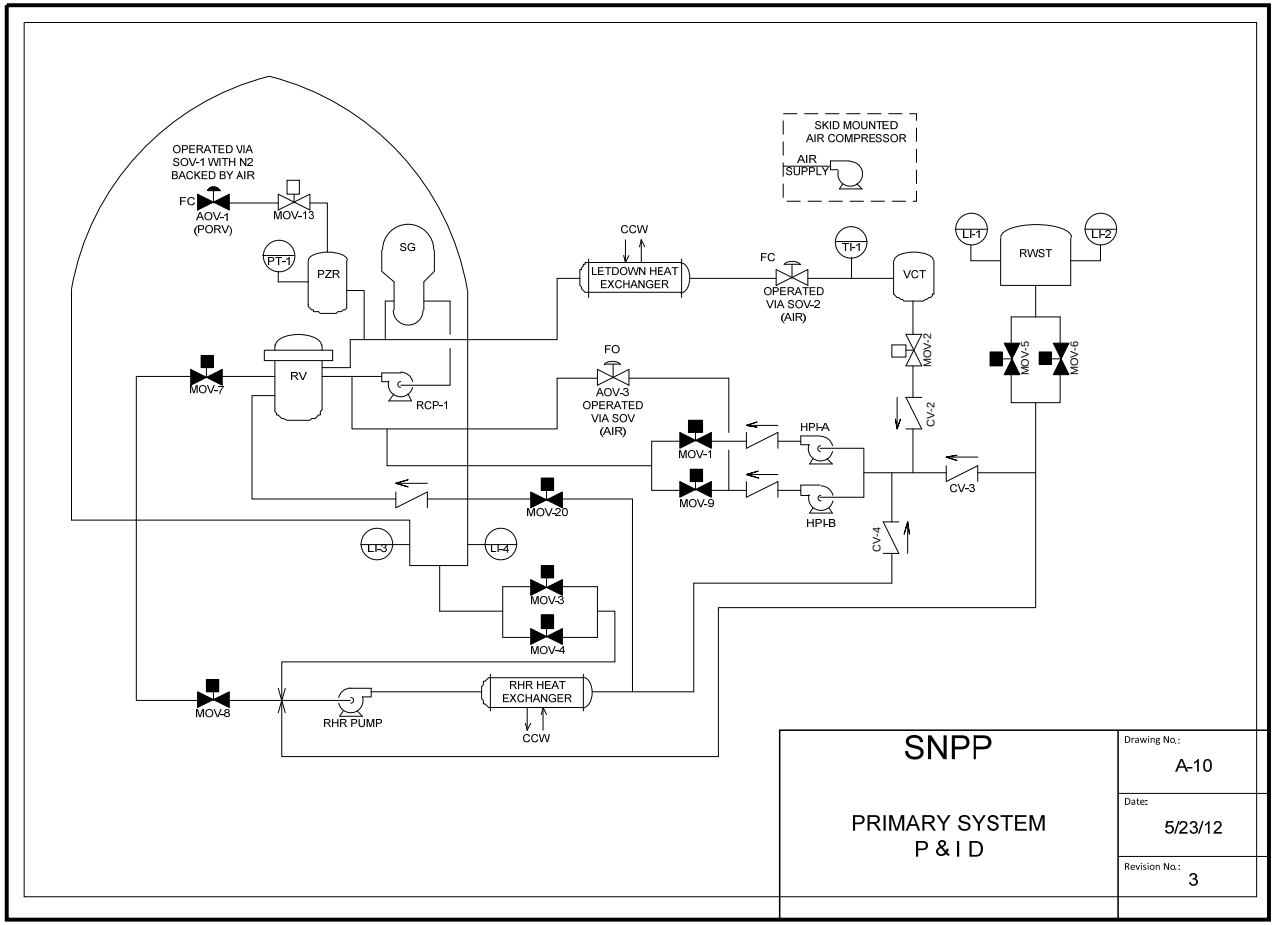
OPERATED VIA
SOV-1 WITH N2
BACKED BY AIR
FC
AOV-1
(PORV)
MOV-13
PT-1
PZR
SG
RV
MOV-7
RCP-1
CCW
LETDOWN HEAT
EXCHANGER
FC
OPERATED
VIA SOV-2
(AIR)
TI-1
VCT
SKID MOUNTED
AIR COMPRESSOR
AIR
SUPPLY
LI-1
RWST
LI-2
MOV-2
MOV-5
MOV-6
CV-2
FO
AOV-3
OPERATED
VIA SOV
(AIR)
MOV-1
MOV-9
HPI-A
HPI-B
CV-3
CV-4
MOV-20
LI-3
LI-4
MOV-3
MOV-4
MOV-8
RHR PUMP
RHR HEAT
EXCHANGER
CCW
SNPP
PRIMARY SYSTEM
P & I D
Drawing No.:
A-10
Date:
5/23/12
Revision No.:
3

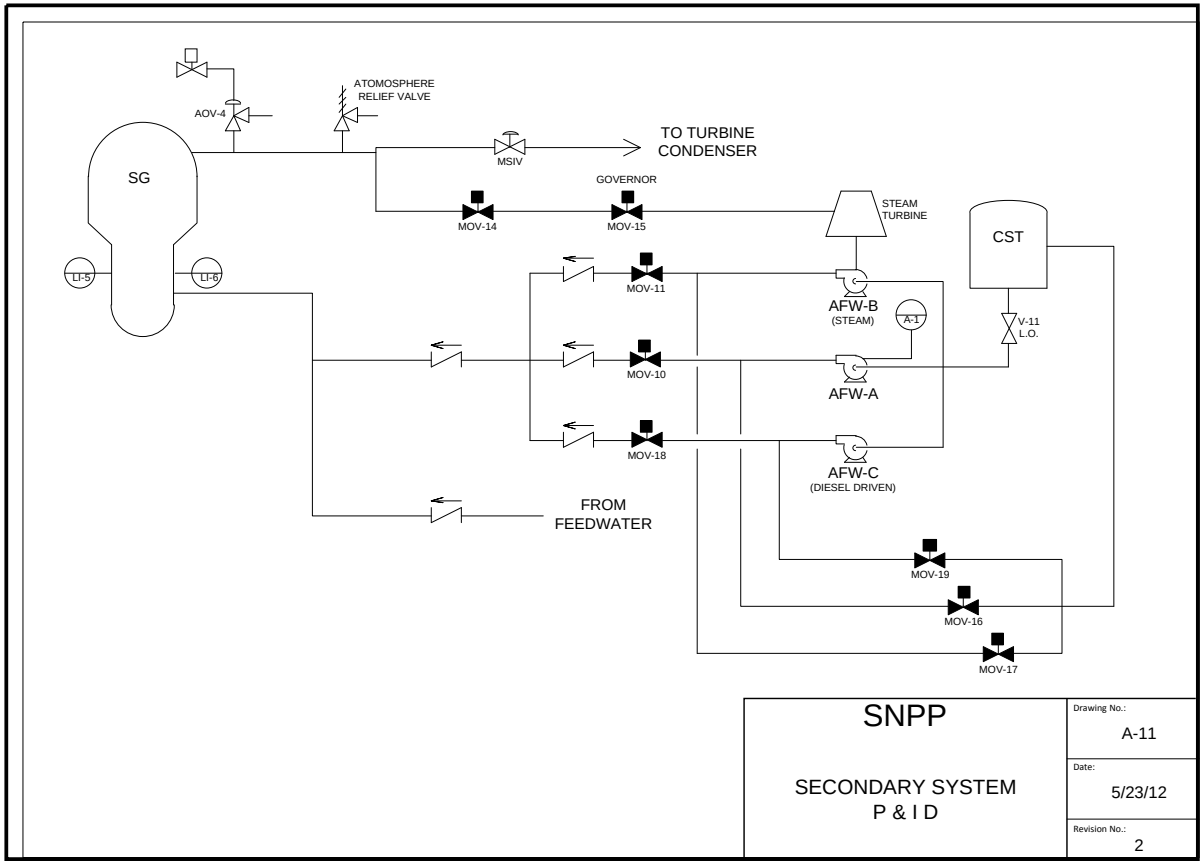
ATOMOSPHERE
RELIEF VALVE
AOV-4
TO TURBINE
CONDENSER
MSIV
SG
GOVERNOR
MOV-14
MOV-15
STEAM
TURBINE
CST
LI-5
LI-6
MOV-11
AFW-B
(STEAM)
A-1
V-11
L.O.
MOV-10
AFW-A
MOV-18
AFW-C
(DIESEL DRIVEN)
FROM
FEEDWATER
MOV-19
MOV-16
MOV-17
SNPP
SECONDARY SYSTEM
P & I D
Drawing No.:
A-11
Date:
5/23/12
Revision No.:
2

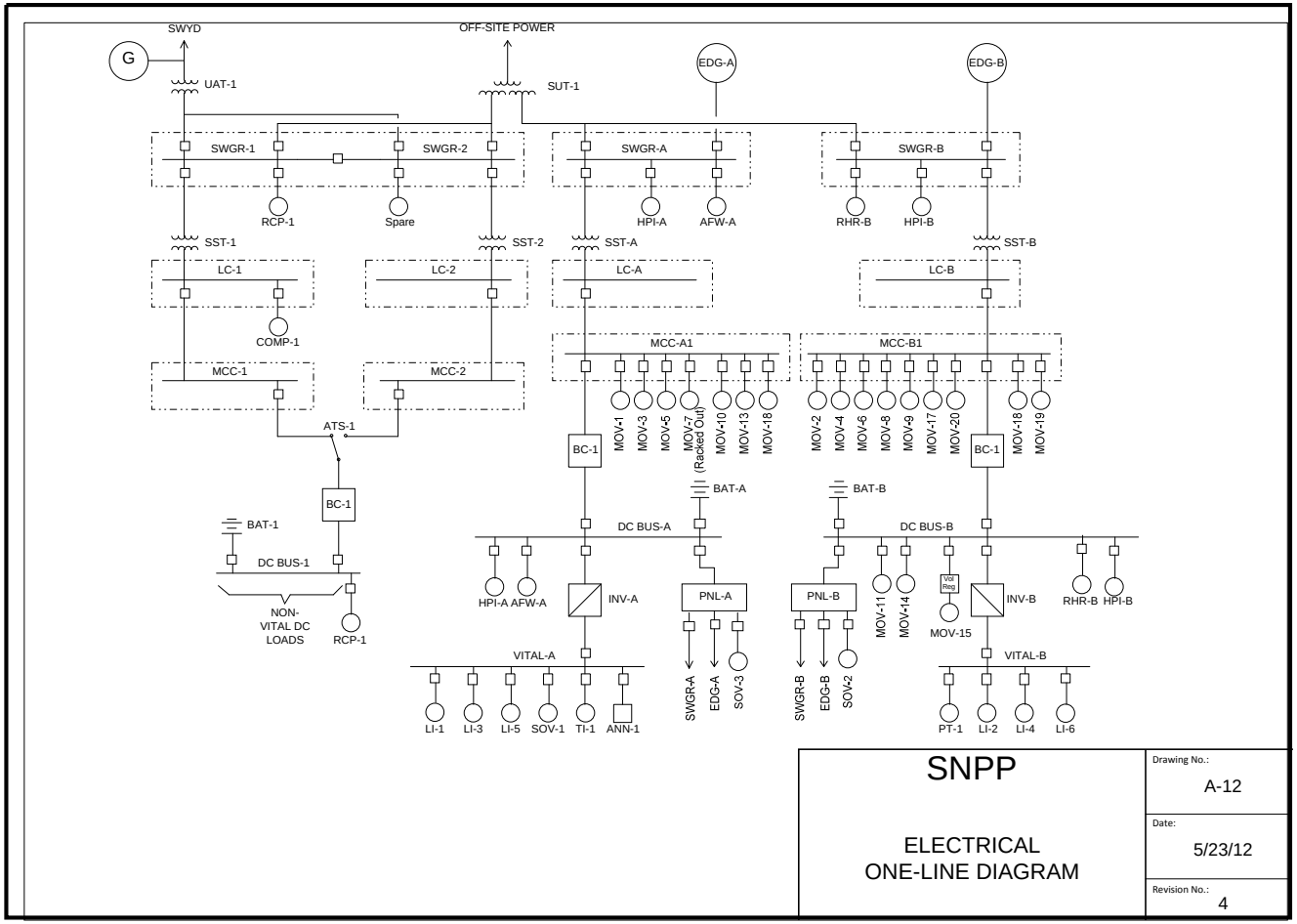
SWYD
OFF-SITE POWER
G
UAT-1
SUT-1
EDG-A
EDG-B
SWGR-1
SWGR-2
SWGR-A
SWGR-B
RCP-1
Spare
HPI-A
AFW-A
RHR-B
HPI-B
SST-1
SST-2
SST-A
SST-B
LC-1
LC-2
LC-A
LC-B
COMP-1
MCC-1
MCC-2
MCC-A1
MCC-B1
ATS-1
BC-1
MOV-1
MOV-3
MOV-5
MOV-7 (Racked Out)
MOV-10
MOV-13
MOV-18
MOV-2
MOV-4
MOV-6
MOV-8
MOV-9
MOV-17
MOV-20
MOV-18
MOV-19
BAT-A
BAT-B
BAT-1
DC BUS-A
DC BUS-B
DC BUS-1
NON-
VITAL DC
LOADS
HPI-A AFW-A
INV-A
PNL-A
PNL-B
MOV-11
MOV-14
Vol Reg
MOV-15
INV-B
RHR-B HPI-B
VITAL-A
VITAL-B
LI-1
LI-3
LI-5
SOV-1
TI-1
ANN-1
SWGR-A
EDG-A
SOV-3
SWGR-B
EDG-B
SOV-2
PT-1
LI-2
LI-4
LI-6
SNPP
ELECTRICAL
ONE-LINE DIAGRAM
Drawing No.:
A-12
Date:
5/23/12
Revision No.:
4

3 MODULE 1: PRA/SYSTEMS

The following is a short description of the Fire PRA technical tasks covered in Module 1. For further details, refer to the individual task descriptions in Volume 2 of EPRI 1011989, NUREG/CR-6850.

- ***Fire PRA Component Selection (Task 2).*** The selection of components that are to be credited for plant shutdown following a fire is a critical step in any Fire PRA. Components selected would generally include many components credited in the 10 CFR 50 Appendix R post-fire SSD analysis. Additional components will likely be selected, potentially including any and all components credited in the plant's internal events PRA. Also, the proposed methodology would likely introduce components beyond either the 10 CFR 50 Appendix R list or the internal events PRA model. Such components are often of interest due to considerations of multiple spurious actuations that may threaten the credited functions and components.
- ***Qualitative Screening (Task 4).*** This task identifies fire analysis compartments that can be shown to have little or no risk significance without quantitative analysis. Fire compartments may be screened out if they contain no components or cables identified in Tasks 2 and 3, and if they cannot lead to a plant trip due to either plant procedures, an automatic trip signal, or technical specification requirements.
- ***Plant Fire-Induced Risk Model (Task 5).*** This task discusses steps for the development of a logic model that reflects plant response following a fire. Specific instructions have been provided for treatment of fire-specific procedures or preplans. These procedures may impact availability of functions and components, or include fire-specific operator actions (e.g., self-induced-station-blackout).
- ***Quantitative Screening (Task 7).*** A Fire PRA allows the screening of fire compartments and scenarios based on their contribution to fire risk. This approach considers the cumulative risk associated with the screened compartments (i.e., the ones not retained for detailed analysis) to ensure that a true estimate of fire risk profile (as opposed to vulnerability) is obtained.
- ***Post-Fire Human Reliability Analysis (Task 12).*** This task considers operator actions for manipulation of plant components. Task 12 is covered in **limited detail** in the PRA/Systems module. In particular, those aspects of Task 12 that deal with identifying and incorporating human failure events (HFEs) into the plant response model are discussed. Methods for quantifying human error probabilities (HEPs) are deferred to Module 4.
- ***Fire Risk Quantification (Task 14).*** The task summarizes what is to be done for quantification of the fire risk results.
- ***Uncertainty and Sensitivity Analyses (Task 15).*** This task describes the approach to follow for identifying and treating uncertainties throughout the Fire PRA process. The treatment may vary from quantitative estimation and propagation of uncertainties where possible

(e.g., in fire frequency and non-suppression probability) to identification of sources without quantitative estimation. The treatment may also include one-at-a-time variation of individual parameter values or modeling approaches to determine the effect on the overall fire risk (sensitivity analysis).

4
MODULE 2: ELECTRICAL ANALYSIS

The following is a short description of the Fire PRA technical tasks covered in Module 2. For further details, refer to the individual task descriptions in Volume 2 of EPRI 1011989, NUREG/CR-6850.

- ***Fire PRA Cable Selection (Task 3).*** This task provides instructions and technical considerations associated with identifying cables supporting those components selected in Task 2. In previous Fire PRA methods (such as EPRI FIVE and Fire PRA Implementation Guide) this task was relegated to the SSD analysis and its associated databases. This document offers a more structured set of rules for selection of cables.
- ***Detailed Circuit Failure Analysis (Task 9).*** This task provides an approach and technical considerations for identifying how the failure of specific cables will impact the components included in the Fire PRA SSD plant response model.
- ***Circuit Failure Mode Likelihood Analysis (Task 10).*** This task considers the relative likelihood of various circuit failure modes. This added level of resolution may be a desired option for those fire scenarios that are significant contributors to the risk. The methodology provided in this document benefits from the knowledge gained from the tests performed in response to the circuit failure issue.

5
MODULE 3: FIRE ANALYSIS

The following is a short description of the Fire PRA technical tasks covered in Module 3. For further details, refer to the individual task descriptions in Volume 2 of EPRI 1011989, NUREG/CR-6850.

- ***Plant Boundary Definition and Partitioning (Task 1).*** The first step in a Fire PRA is to define the physical boundary of the analysis, and to divide the area within that boundary into analysis compartments.
- ***Fire Ignition Frequency (Task 6).*** This task describes the approach to develop frequency estimates for fire compartments and scenarios. Ignition frequencies are provided for 37 item types that are categorized by ignition source type and location within the plant. For example, ignition frequencies are provided for transient fires in the Turbine Buildings and in the Auxiliary Buildings. A method is provided on how to specialize these frequencies to the specific cases and conditions.
- ***Scoping fire Modeling (Task 8).*** Scoping fire modeling is the first task in the Fire PRA framework where fire modeling tools are used to identify ignition sources that may impact the fire risk of the plant. Screening some of the ignition sources, along with the applications of severity factors to the unscreened ones, may reduce the compartment fire frequency previously calculated in Task 6.
- ***Detailed Fire Modeling (Task 11).*** This task describes the method to examine the consequences of a fire. This includes consideration of scenarios involving single compartments, multiple fire compartments, and the main control room. Factors considered include initial fire characteristics, fire growth in a fire compartment or across fire compartments, detection and suppression, electrical raceway fire barrier systems), and damage from heat and smoke. Special consideration is given to turbine generator (T/G) fires, hydrogen fires, high-energy arcing faults, cable fires, and main control board (MCB) fires.
- ***Seismic Fire Interactions (Task 13).*** This task is a qualitative approach for identifying potential interactions between an earthquake and fire.

6
MODULE 4: FIRE PRA HUMAN RELIABILITY ANALYSIS

The following is a short description of the Fire PRA technical tasks covered in Module 4. For further details relative to this technical task, refer to the individual task descriptions in Volume 2 of EPRI 1011989, NUREG/CR-6850.

- ***Post-Fire Human Reliability Analysis (Task 12).*** This task considers operator actions for manipulation of plant components. The analysis task procedure provides structured instructions for identification and inclusion of these actions in the Fire PRA. The procedure also provides instructions for incorporating human error probabilities (HEPs) into the fire PRA analysis.

Note that NUREG/CR-6850, EPRI 1011989 did not develop a detailed fire HRA methodology. Training module 4 is instead based on a joint EPRI/RES project as documented in NUREG-1921, EPRI 1019196, *EPRI/NRC-RES Fire Human Reliability Analysis Guidelines – Draft Report for Comment.* Publication of the final report remains pending. The training materials presented here are based on the draft guidance including consideration of public review comments received and the team's response to those comments.

7

MODULE 5: ADVANCED FIRE MODELING

The following is a short description of the Fire PRA technical tasks covered in Module 5. For further details relative to this technical task, refer to the individual task descriptions in Volume 2 of EPRI 1011989, NUREG/CR-6850.

- ***Scoping fire Modeling (Task 8).*** Scoping fire modeling is the first task in the Fire PRA framework where fire modeling tools are used to identify ignition sources that may impact the fire risk of the plant. Screening some of the ignition sources, along with the applications of severity factors to the unscreened ones, may reduce the compartment fire frequency previously calculated in Task 6.
- ***Detailed Fire Modeling (Task 11).*** This task describes the method to examine the consequences of a fire. This includes consideration of scenarios involving single compartments, multiple fire compartments, and the main control room. Factors considered include initial fire characteristics, fire growth in a fire compartment or across fire compartments, detection and suppression, electrical raceway fire barrier systems), and damage from heat and smoke. Special consideration is given to turbine generator (T/G) fires, hydrogen fires, high-energy arcing faults, cable fires, and main control board (MCB) fires.

Note that NUREG/CR-6850, EPRI 1011989 did not provide detailed guidance on the application of fire modeling tools. Rather, the base methodology document assumes that the analyst will apply a range of computation fire modeling tools to support the analysis, provides recommended practice relative to the general development/definition of fire scenarios and provides recommendations for characterizing of various fire sources (e.g., heat release rate transient profiles and peak heat release rate distribution curves). The question of selecting and applying appropriate fire modeling tools was left to the analyst's discretion.

Training module 5 is instead based on a joint EPRI/RES project as documented in NUREG-1924, EPRI 1019195, *Nuclear Power Plant Fire Modeling Application Guide – Draft Report for Comment.* Publication of the final report remains pending. The training materials presented here are based on the draft guidance including consideration of public review comments received and the team's response to those comments.