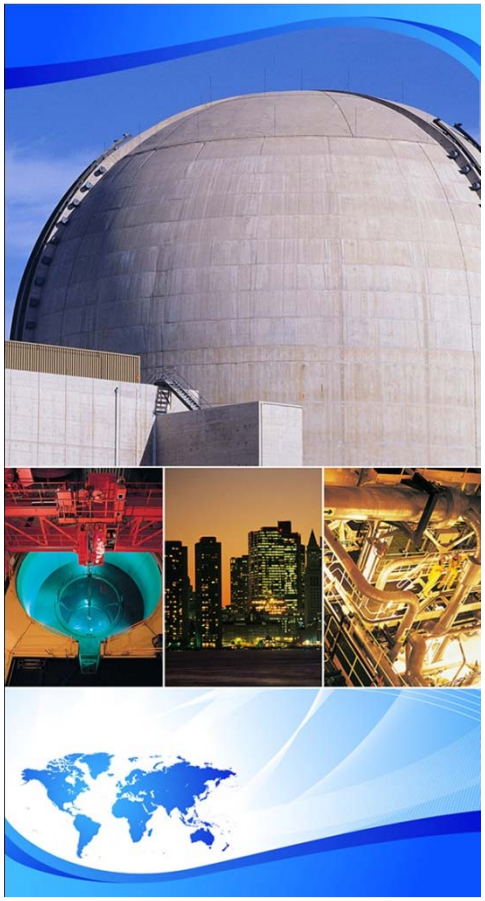

EPRI/NRC-RES FIRE PRA METHODOLOGY

Sample Plant Description

Joint RES/EPRI Fire PRA Workshop
July and September, 2012
Bethesda, MD

A Collaboration of U.S. NRC Office of Nuclear Regulatory Research (RES) & Electric Power Research Institute (EPRI)

Sample Problems / Sample Plant

- Fire PRA module will involve hands-on exercises
  - Intent: To illustrate *key aspects* of the methodology through a cohesive set of sample problems
- All exercises are built around a common sample plant – the Simple Nuclear Power Plant (SNPP)
- The exercises are designed such that taking all modules together presents a fairly complete picture of the FPRA methodology
  - Not every task is covered by the SNPP sample problems
  - Not every aspect of covered tasks are illustrated

The SNPP: Intent and Approach

- The SNPP is not intended to reflect either regulatory compliance or good engineering practice
  - It is purely an imaginary construct intended to highlight key aspects of the methodology – nothing more!
- The SNPP has been kept as simple as possible while still serving the needs of the training modules
- Aspects of the plant are assumed for purposes of the training exercises, e.g.:
  - BOP equipment not covered in detail
  - Some systems are assumed to remain available

The SNPP: Plant Characteristics

- PWR with one primary coolant loop
  - One steam generator, one RCP, one pressurizer
  - Chemical volume control/high-pressure injection system
  - Residual heat removal system
- Secondary side includes:
  - Main steam and feedwater loop for the single steam generator (not modeled)
  - Multiple train auxiliary feedwater system to provide decay heat removal
- Support systems includes:
  - CCW (not modeled)
  - Instrument air
  - AC and DC power
  - Instrumentation
- See Chapter 2 for complete plant description

The SNPP: Primary Systems P&ID

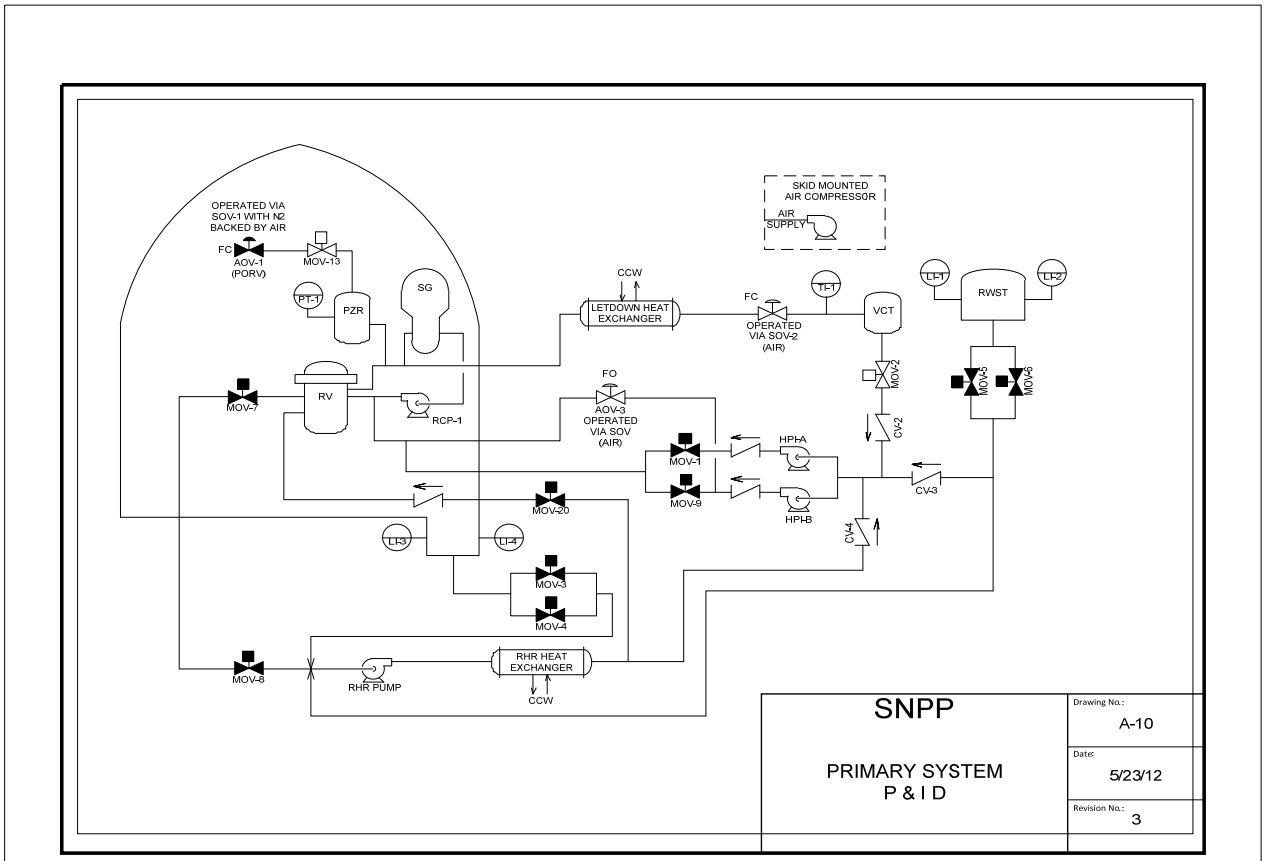

The SNPP: Secondary Systems P&ID

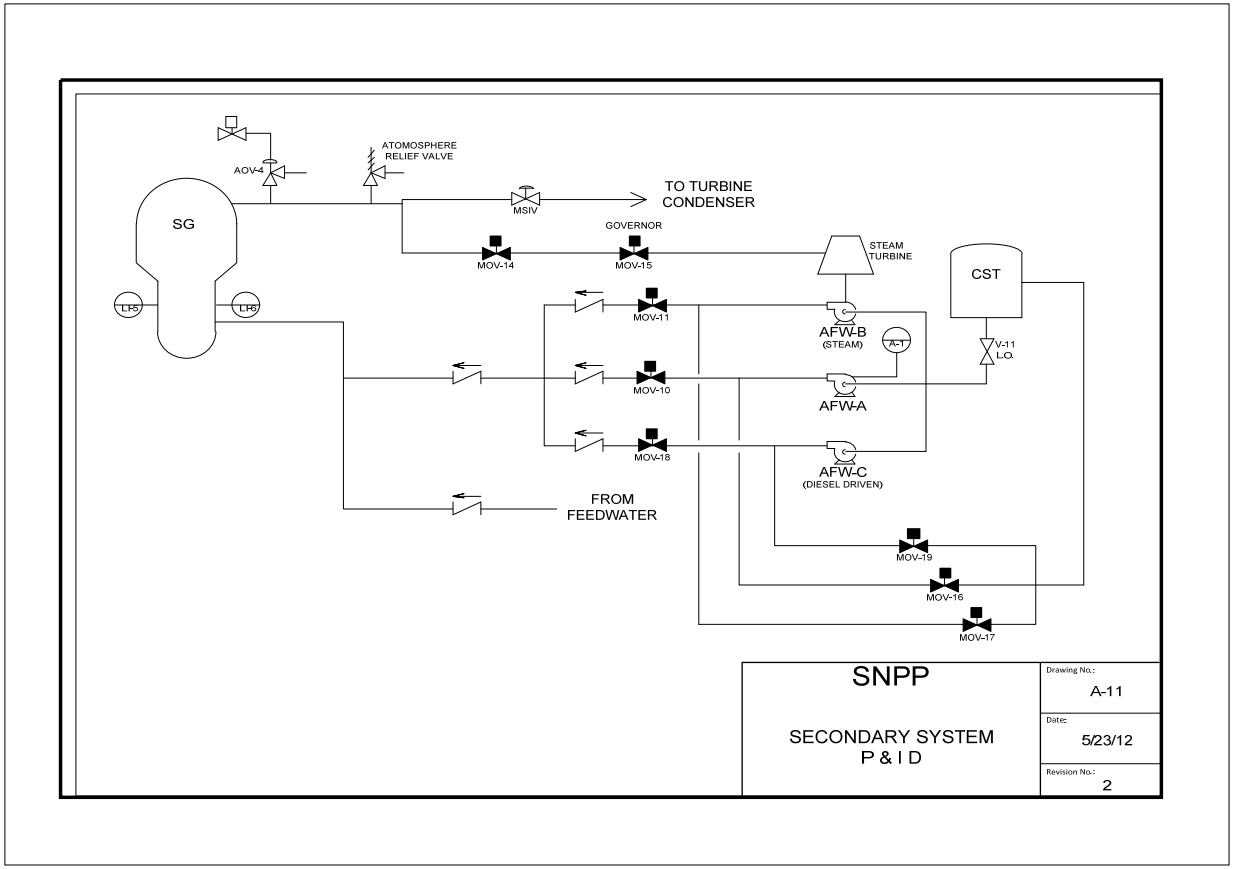

The SNPP: Electrical One-Line Diagram

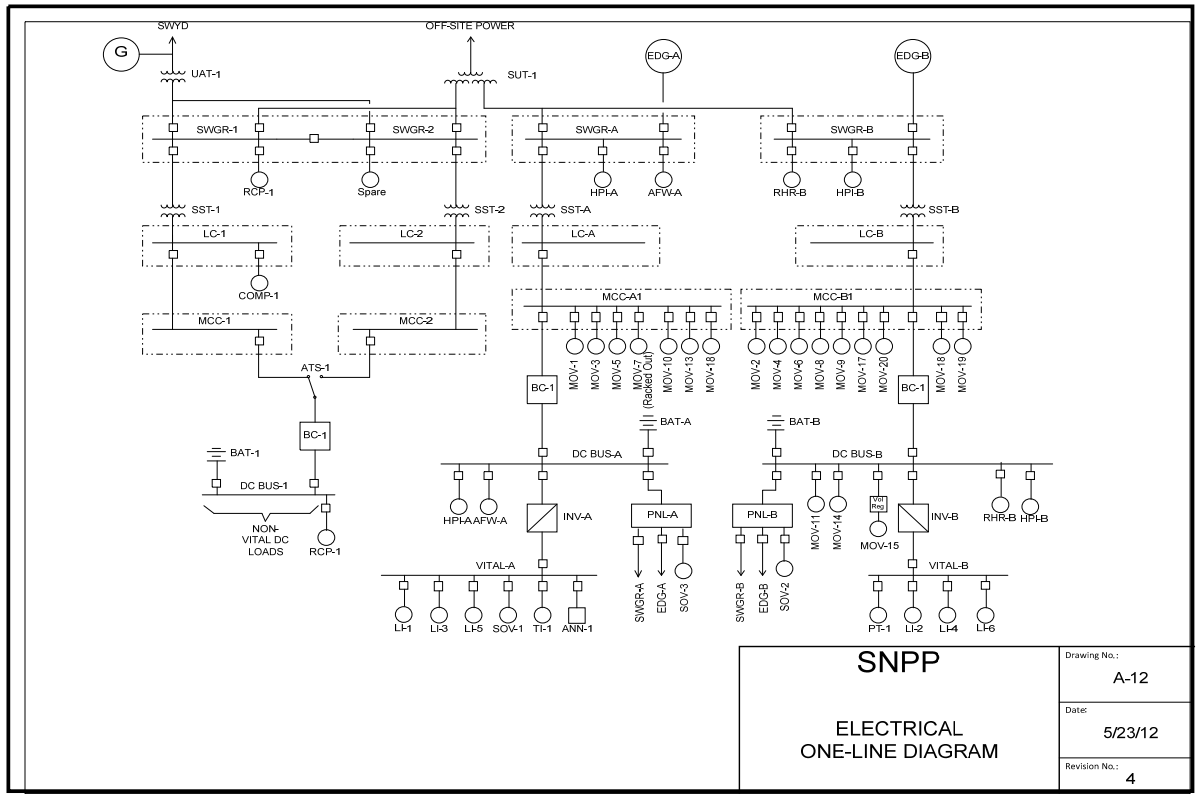

The SNPP: General Plant Layout - Plan

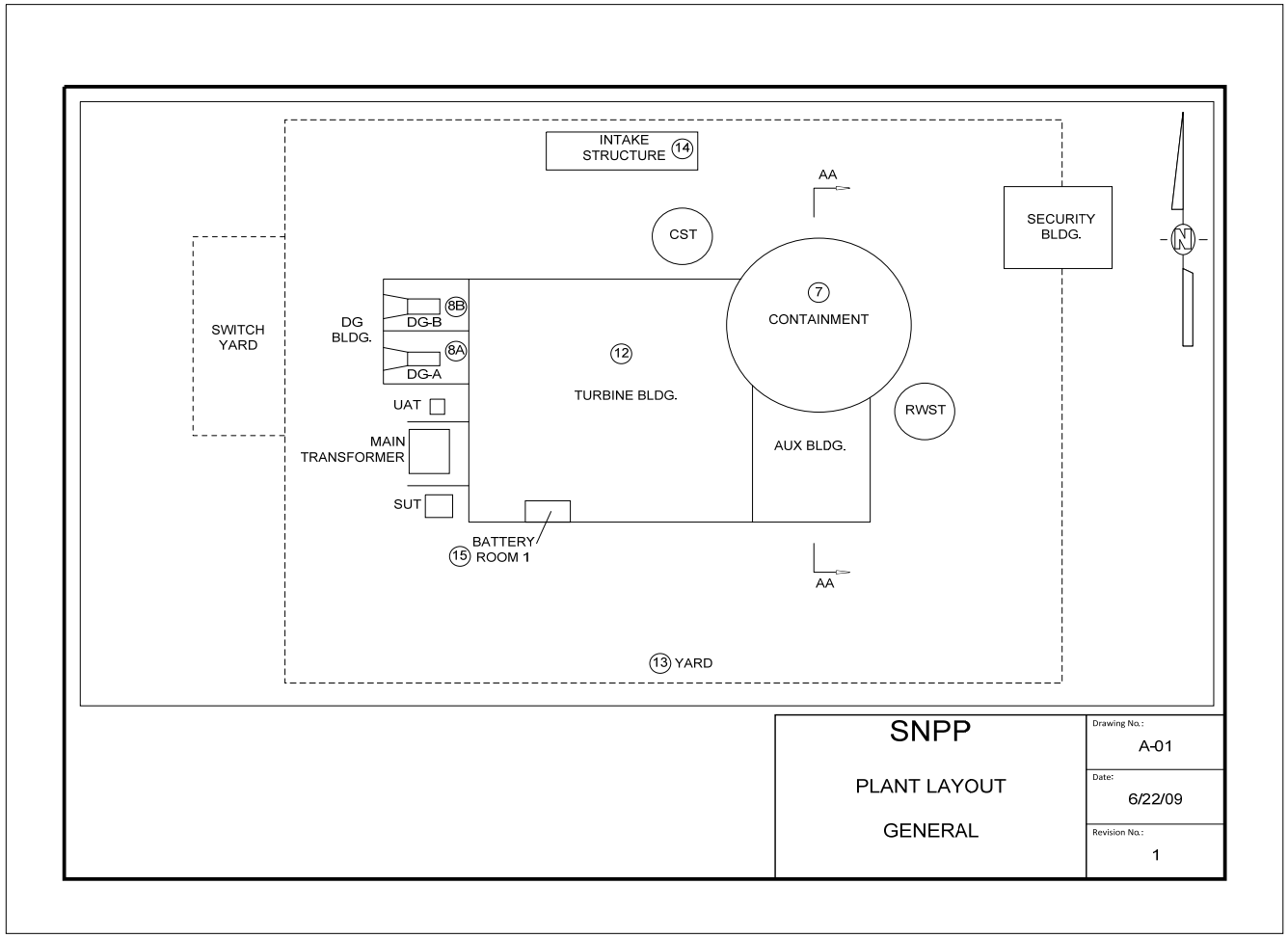

The SNPP: Plant Layout – Elevation Containment and Auxiliary Building

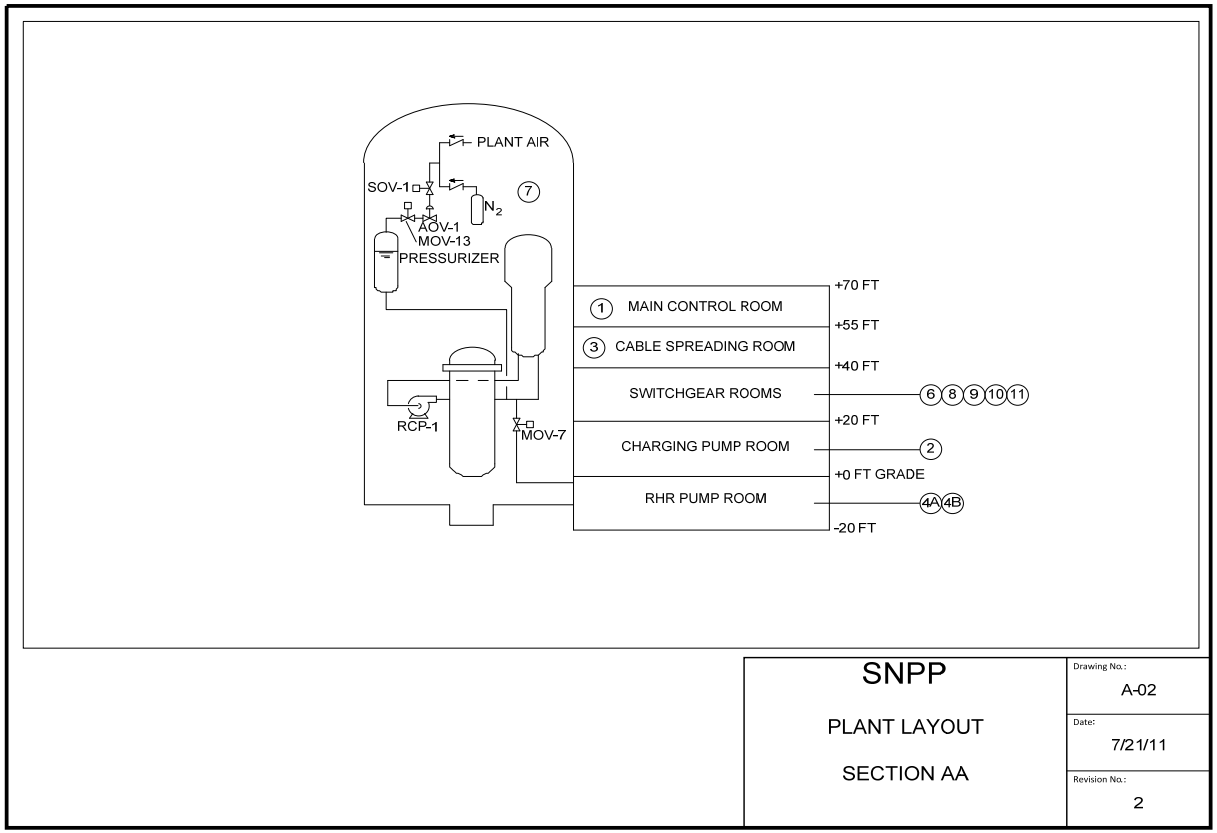

The SNPP: Aux. Bld. – RHR Pump Room

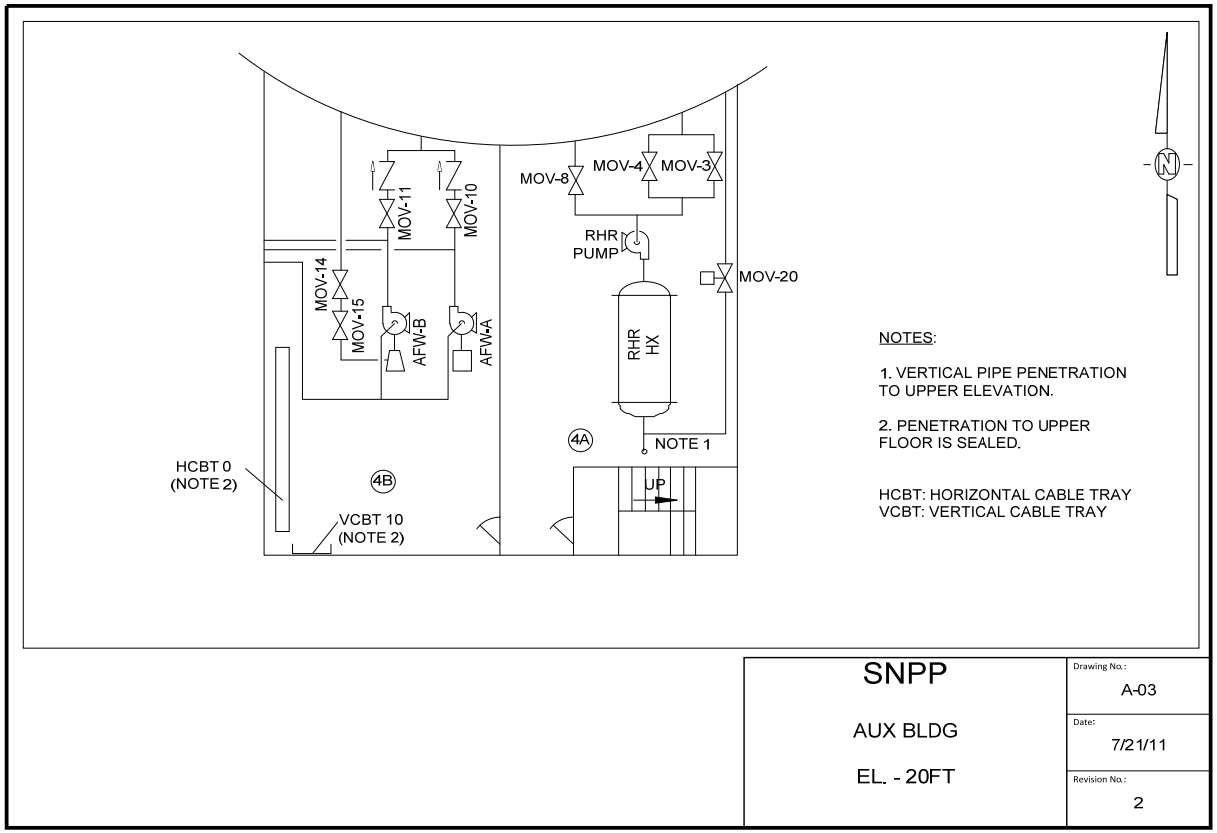

The SNPP: Aux. Bld. – Charging Pump Rm.

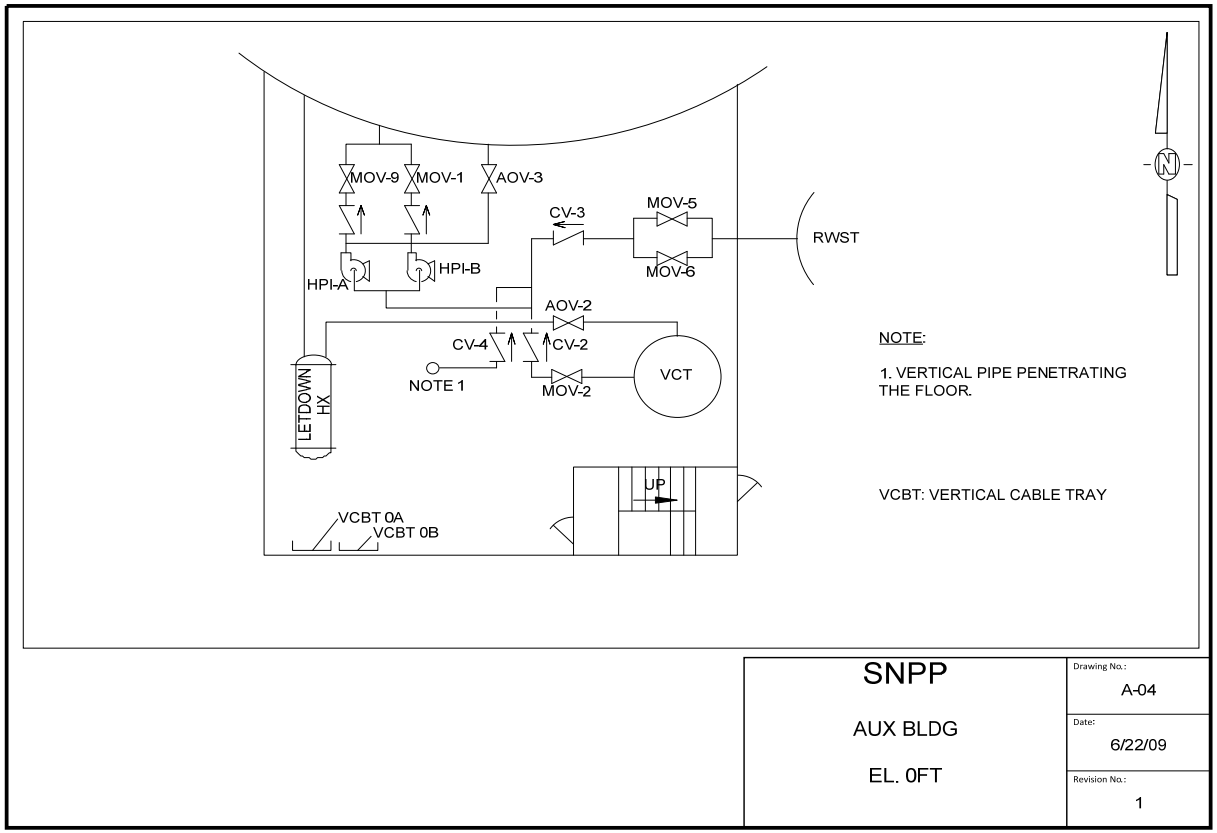

The SNPP: Aux. Bld. – Switchgear Rooms

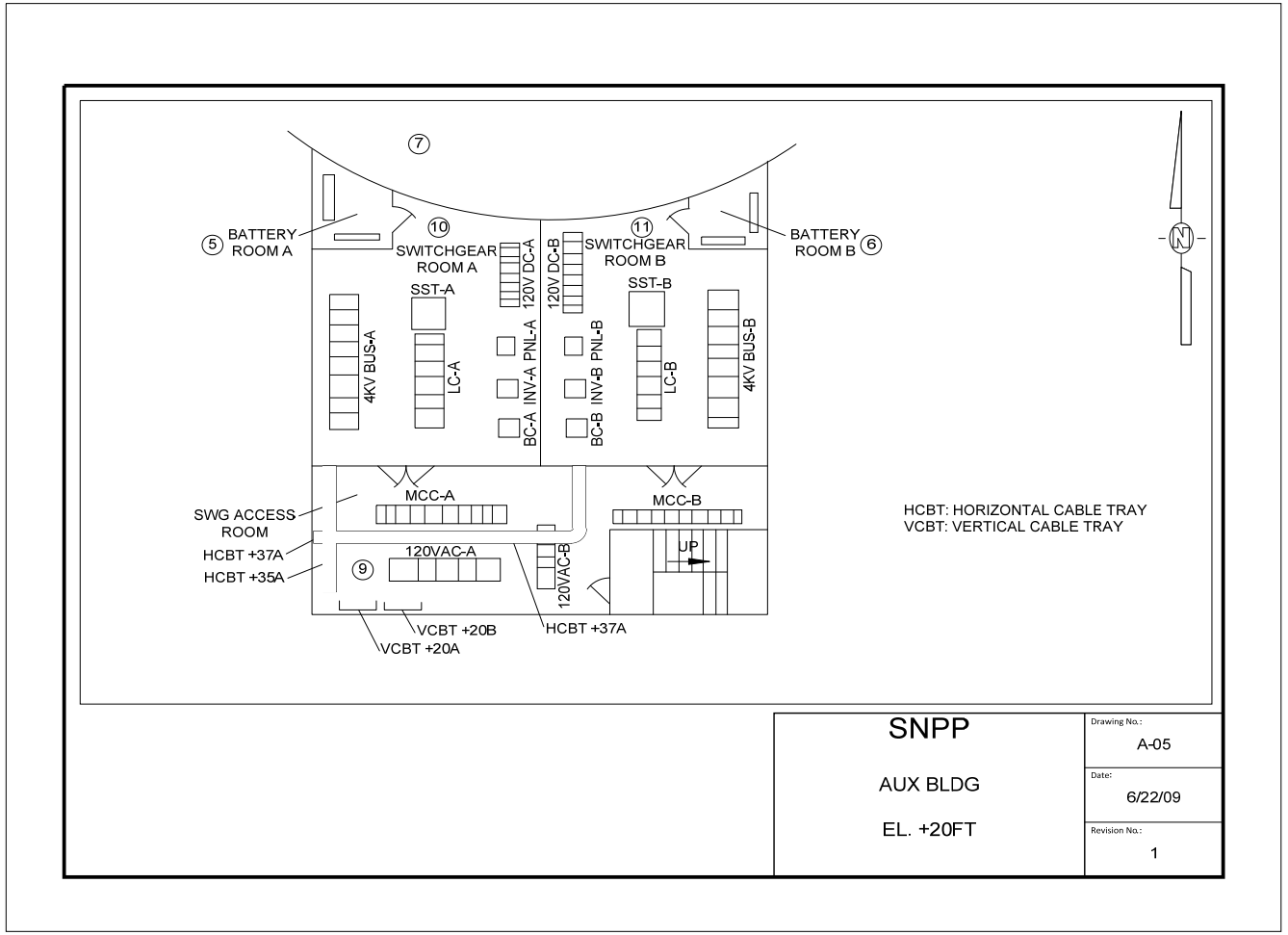

The SNPP: Aux. Bld. – Cable Spreading Rm.

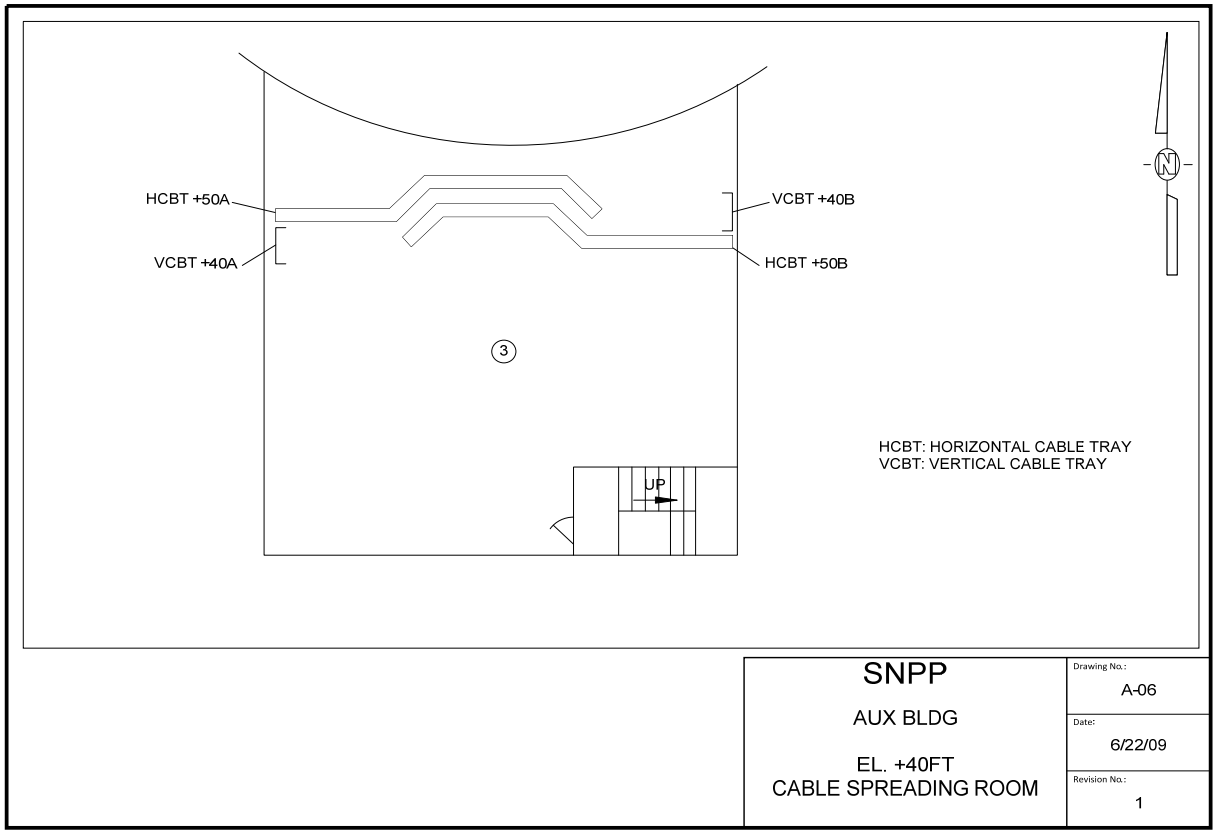

The SNPP: Aux. Bld. – Main Control Room

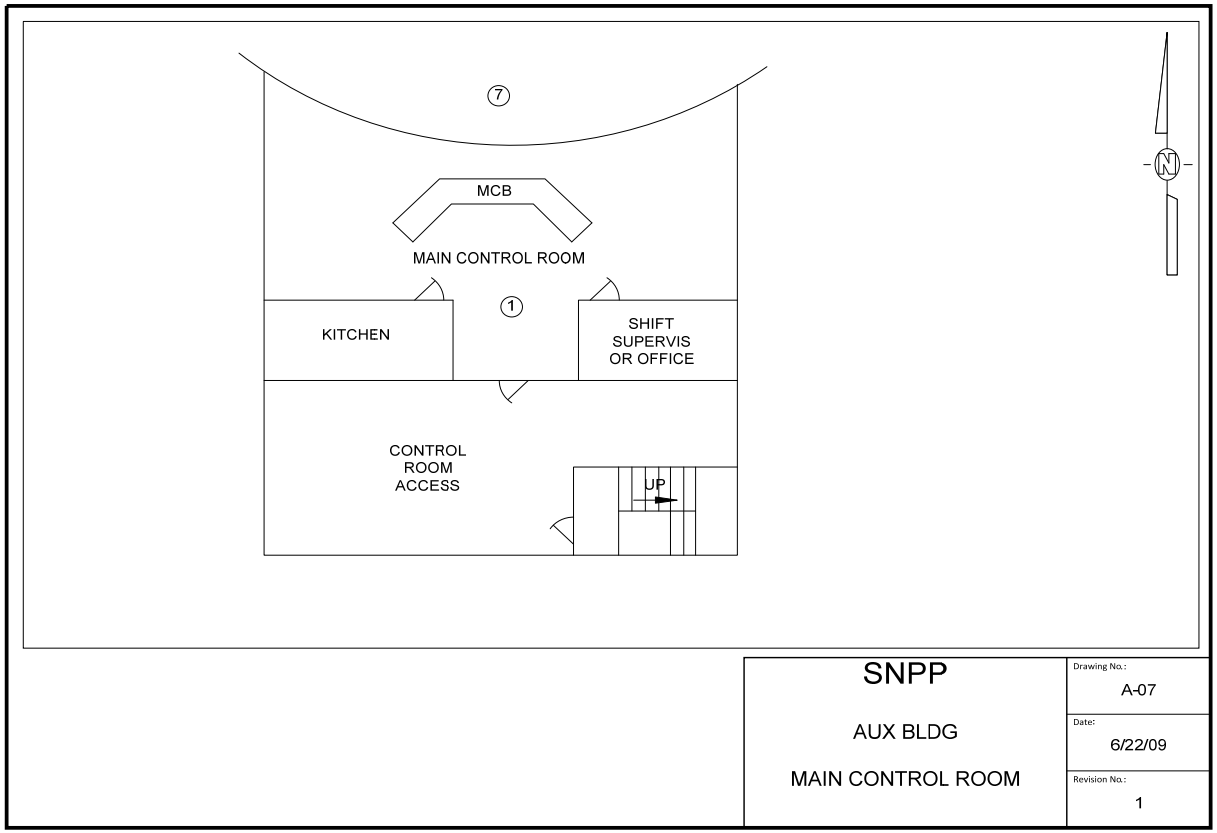

The SNPP: Turbine Building

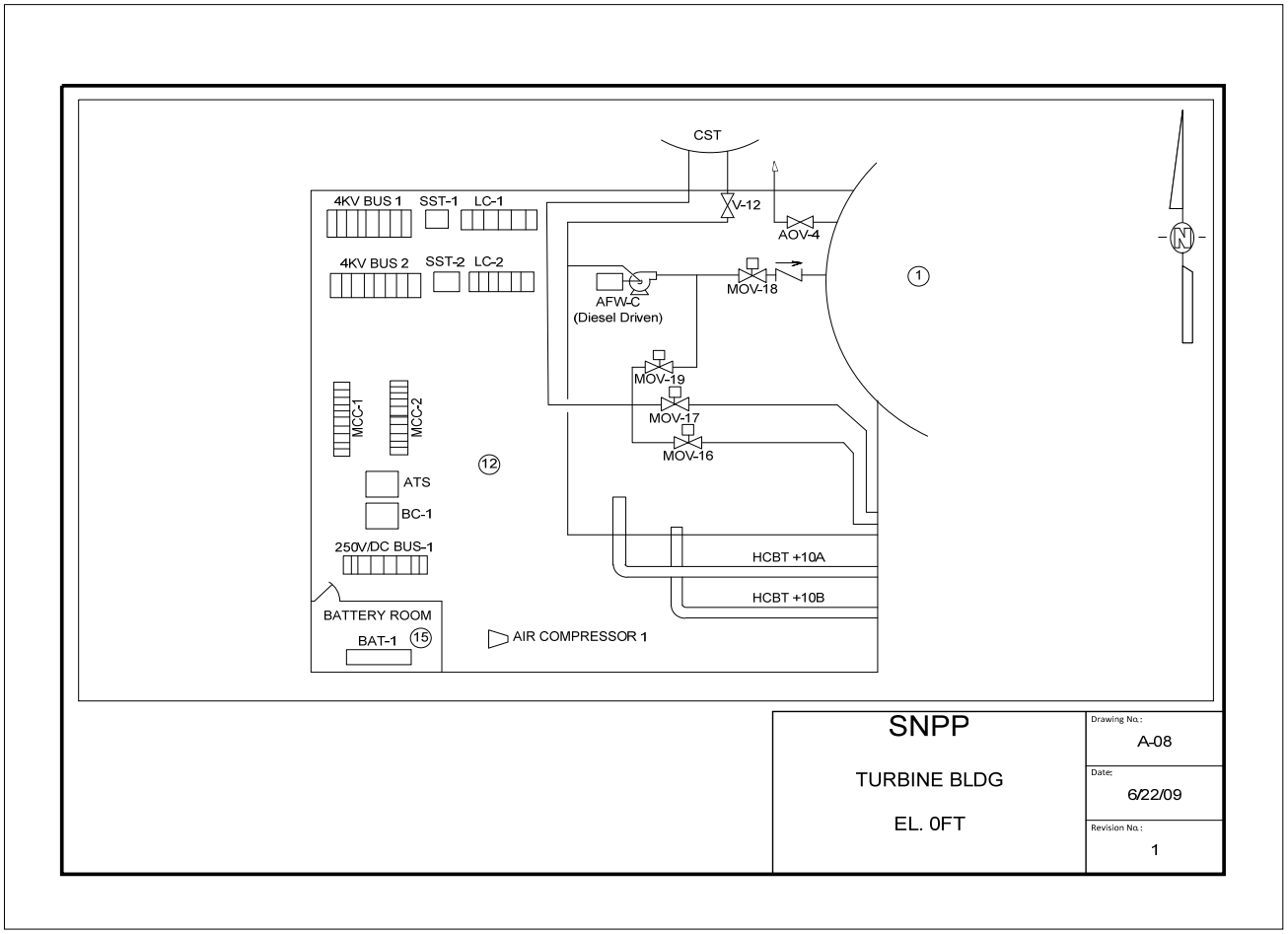
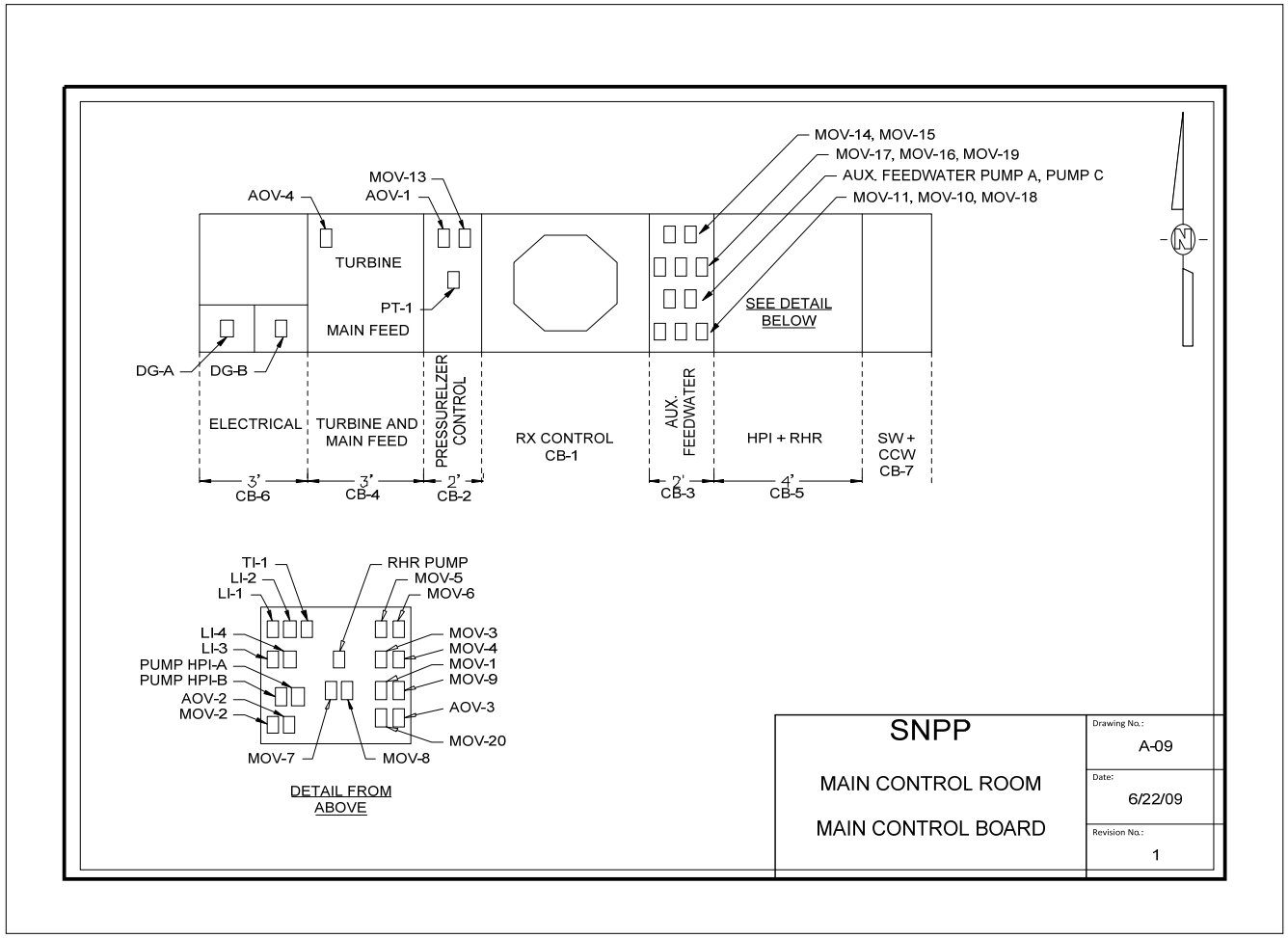
The SNPP: Main Control Board Layout