Step 1: Develop CDF or CCDP Model

CDF FIRE PRA MODEL MAPPING TABLE (USE THE EVENT TREES AND FAULT TREES BELOW)				
Fire Initiating Event	**Equipment ID**	**PRA Event Identifier**	**Additional model changes are required to facilitate mapping? (Y or N)**	**Describe modeling strategy to facilitate mapping.**
%FA-1	HPI-A	HPIA_FTS	N	
%FA-1	HPI-A	HPIA_FTR	N	
%FA-1	HPI-B	HPIB_FTS	N	
%FA-1	HPI-B	HPIB_FTR	N	
%FA-1	RHR-B	RHRB_FTS	N	
%FA-1	RHR-B	RHRB_FTR	N	
%FA-1	AFW-A	AFWA-FTS	N	
%FA-1	AFW-A	AFWA-FTR	N	
%FA-1	AFW-B	AFWB-FTS	N	
%FA-1	AFW-B	AFWB-FTR	N	
%FA-1	AFW-C	AFWC-FTS	N	

CDF FIRE PRA MODEL MAPPING TABLE (USE THE EVENT TREES AND FAULT TREES BELOW)				
Fire Initiating Event	**Equipment ID**	**PRA Event Identifier**	**Additional model changes are required to facilitate mapping? (Y or N)**	**Describe modeling strategy to facilitate mapping.**
%FA-1	AFW-C	AFWC-FTR	N	
%FA-1	RCP-1	RCP1-FTT	Y	RCP fails to trip given loss of CCW
%FA-1	AOV-1 (SOV-1)	AOV-1_TO	Y	Spurious opening of PORV and failure to open PORV path
%FA-1	AOV-1 (SOV-1)	AOV-1_FTO	N	
%FA-1	AOV-2 (SOV-2)	AOV-2_FTC	Y	Failure to isolate letdown and establish flow from injection tank
%FA-1	AOV-2 (SOV-2)	AOV-2_TC	Y	Spurious closure of letdown and opening of AOV-3 lead to PORV opening
%FA-1	AOV-3 (SOV-3)	AOV-3_FTC	N	
%FA-1	AOV-3 (SOV-3)	AOV-3_TO	Y	Spurious closure of letdown and opening of AOV-3 lead to PORV opening
%FA-1	AOV-4 (SOV-4)	AOV-4_TO	Y	Spurious opening of atmospheric dump valve
%FA-1	MOV-1	MOV-1_FTO	N	

CDF FIRE PRA MODEL MAPPING TABLE (USE THE EVENT TREES AND FAULT TREES BELOW)				
Fire Initiating Event	**Equipment ID**	**PRA Event Identifier**	**Additional model changes are required to facilitate mapping? (Y or N)**	**Describe modeling strategy to facilitate mapping.**
%FA-1	MOV-2	MOV-2_FTC	N	
%FA-1	MOV-3	MOV-3_TO	Y	Containment sump flow path open
%FA-1	MOV-4	MOV-4_TO	Y	Containment sump flow path open
%FA-1	MOV-5	MOV-5_FTO	N	
%FA-1	MOV-6	MOV-6_FTO	N	
%FA-1	MOV-9	MOV-9_FTO	N	
%FA-1	MOV-10	MOV-10_FTO	N	
%FA-1	MOV-11	MOV-11_FTO	N	
%FA-1	MOV-13	MOV-13_FTC	Y	Spurious opening of PORV and failure to close PORV path
%FA-1	MOV-13	MOV-13_TC	Y	Spurious closure of PORV
%FA-1	MOV-14	MOV-14_FTO	N	
%FA-1	MOV-15	MOV-15_FTO	N	

CDF FIRE PRA MODEL MAPPING TABLE (USE THE EVENT TREES AND FAULT TREES BELOW)				
Fire Initiating Event	**Equipment ID**	**PRA Event Identifier**	**Additional model changes are required to facilitate mapping? (Y or N)**	**Describe modeling strategy to facilitate mapping.**
%FA-1	MOV-18	MOV-18_FTO	Y	Insufficient flow from AFW pump C
%FA-1	LI-1	LI-1_FL	Y	Spurious instrumentation failure causes operator to prematurely switchover to recirculation
%FA-1	LI-1	LI-1_FH	Y	Operator fails to switchover to recirculation due to instrumentation failure
%FA-1	LI-2	LI-2_FL	Y	Spurious instrumentation failure causes operator to prematurely switchover to recirculation
%FA-1	LI-2	LI-2_FH	Y	Operator fails to switchover to recirculation due to instrumentation failure
%FA-1	LI-3	LI-3_FH	Y	Spurious instrumentation failure causes operator to prematurely switchover to recirculation
%FA-1	LI-4	LI-4_FH	Y	Spurious instrumentation failure causes operator to prematurely switchover to recirculation
%FA-1	LI-5	LI-5_FH	Y	Spurious instrumentation failure causes operator to fail to initiate feed and bleed

CDF FIRE PRA MODEL MAPPING TABLE (USE THE EVENT TREES AND FAULT TREES BELOW)				
Fire Initiating Event	**Equipment ID**	**PRA Event Identifier**	**Additional model changes are required to facilitate mapping? (Y or N)**	**Describe modeling strategy to facilitate mapping.**
%FA-1	LI-6	LI-6_FH	Y	Spurious instrumentation failure causes operator to fail to initiate feed and bleed
%FA-1	TI-1	TI-1_FL	Y	Failure to isolate letdown and establish flow from injection tank due to instrumentation failure
%FA-1	PT-1	PT-1_FH	Y	
%FA-1	PT-1	PT-1_FL	Y	Operator fails to establish feed and bleed cooling due instrumentation failure.
%FA-1	A-1	ANN-1_FH	Y	Operator shuts down AFW pump A due to high motor temperature alarm.
%FA-1	SWGR-A	EPS-4VBUSAF-1st	N	
%FA-1	SWGR-A	EPS-4VBUSAF-2nd	N	
%FA-1	SWGR-B	EPS-4VBUSBF-1st	N	
%FA-1	SWGR-B	EPS-4VBUSBF-2nd	N	
%FA-1	SWGR-1	EPS-4VBUS1F	N	

CDF FIRE PRA MODEL MAPPING TABLE (USE THE EVENT TREES AND FAULT TREES BELOW)				
Fire Initiating Event	**Equipment ID**	**PRA Event Identifier**	**Additional model changes are required to facilitate mapping? (Y or N)**	**Describe modeling strategy to facilitate mapping.**
%FA-1	SUT-1	SUTF	N	
%FA-1	UAT-1	UATF	N	
%FA-1	EDG-A	EPS-DGAF	N	
%FA-1	EDG-B	EPS-DGBF	N	
%FA-1	LC-1	EPS-480VLC1F	N	
%FA-1	LC-A	EPS-480VLCAF	N	
%FA-1	LC-B	EPS-480VLCBF	N	
%FA-2	HPI-A	HPIA_FTS	N	
%FA-2	HPI-A	HPIA_FTR	N	
%FA-2	HPI-B	HPIB_FTS	N	
%FA-2	HPI-B	HPIB_FTR	N	
%FA-2	RHR-B	RHRB_FTS	N	
%FA-2	RHR-B	RHRB_FTR	N	

CDF FIRE PRA MODEL MAPPING TABLE (USE THE EVENT TREES AND FAULT TREES BELOW)				
Fire Initiating Event	**Equipment ID**	**PRA Event Identifier**	**Additional model changes are required to facilitate mapping? (Y or N)**	**Describe modeling strategy to facilitate mapping.**
%FA-2	RCP-1	RCP1-FTT	Y	RCP fails to trip given loss of CCW
%FA-2	AOV-2 (SOV-2)	AOV-2_FTC	Y	Failure to isolate letdown and establish flow from injection tank
%FA-2	AOV-2 (SOV-2)	AOV-2_TC	Y	Spurious closure of letdown and opening of AOV-3 lead to PORV opening
%FA-2	AOV-3 (SOV-3)	AOV-3_FTC	N	
%FA-2	AOV-3 (SOV-3)	AOV-3_TO	Y	Spurious closure of letdown and opening of AOV-3 lead to PORV opening
%FA-2	MOV-1	MOV-1_FTO	N	
%FA-2	MOV-2	MOV-2_FTC	N	
%FA-2	MOV-3	MOV-3_TO	Y	Containment sump flow path open
%FA-2	MOV-4	MOV-4_TO	Y	Containment sump flow path open
%FA-2	MOV-5	MOV-5_FTO	N	
%FA-2	MOV-6	MOV-6_FTO	N	

CDF FIRE PRA MODEL MAPPING TABLE (USE THE EVENT TREES AND FAULT TREES BELOW)				
Fire Initiating Event	**Equipment ID**	**PRA Event Identifier**	**Additional model changes are required to facilitate mapping? (Y or N)**	**Describe modeling strategy to facilitate mapping.**
%FA-2	MOV-9	MOV-9_FTO	N	
%FA-2	TI-1	TI-1_FL	Y	Failure to isolate letdown and establish flow from injection tank due to instrumentation failure
%FA-2	A-1	ANN-1_FH	Y	Operator shuts down AFW pump A due to high motor temperature alarm.
%FA-3	HPI-A	HPIA_FTS	N	
%FA-3	HPI-A	HPIA_FTR	N	
%FA-3	HPI-B	HPIB_FTS	N	
%FA-3	HPI-B	HPIB_FTR	N	
%FA-3	RHR-B	RHRB_FTS	N	
%FA-3	RHR-B	RHRB_FTR	N	
%FA-3	AFW-A	AFWA-FTS	N	
%FA-3	AFW-A	AFWA-FTR	N	

CDF FIRE PRA MODEL MAPPING TABLE (USE THE EVENT TREES AND FAULT TREES BELOW)				
Fire Initiating Event	**Equipment ID**	**PRA Event Identifier**	**Additional model changes are required to facilitate mapping? (Y or N)**	**Describe modeling strategy to facilitate mapping.**
%FA-3	AFW-B	AFWB-FTS	N	
%FA-3	AFW-B	AFWB-FTR	N	
%FA-3	AFW-C	AFWC-FTS	N	
%FA-3	AFW-C	AFWC-FTR	N	
%FA-3	RCP-1	RCP1-FTT	Y	RCP fails to trip given loss of CCW
%FA-3	AOV-1 (SOV-1)	AOV-1_TO	Y	Spurious opening of PORV and failure to open PORV path
%FA-3	AOV-1 (SOV-1)	AOV-1_FTO	N	
%FA-3	AOV-2 (SOV-2)	AOV-2_FTC	Y	Failure to isolate letdown and establish flow from injection tank
%FA-3	AOV-2 (SOV-2)	AOV-2_TC	Y	Spurious closure of letdown and opening of AOV-3 lead to PORV opening
%FA-3	AOV-3 (SOV-3)	AOV-3_FTC	N	
%FA-3	AOV-3 (SOV-3)	AOV-3_TO	Y	Spurious closure of letdown and opening of

CDF FIRE PRA MODEL MAPPING TABLE (USE THE EVENT TREES AND FAULT TREES BELOW)				
Fire Initiating Event	**Equipment ID**	**PRA Event Identifier**	**Additional model changes are required to facilitate mapping? (Y or N)**	**Describe modeling strategy to facilitate mapping.**
				AOV-3 lead to PORV opening
%FA-3	AOV-4 (SOV-4)	AOV-4_TO	Y	Spurious opening of atmospheric dump valve
%FA-3	MOV-1	MOV-1_FTO	N	
%FA-3	MOV-2	MOV-2_FTC	N	
%FA-3	MOV-3	MOV-3_TO	Y	Containment sump flow path open
%FA-3	MOV-4	MOV-4_TO	Y	Containment sump flow path open
%FA-3	MOV-5	MOV-5_FTO	N	
%FA-3	MOV-6	MOV-6_FTO	N	
%FA-3	MOV-9	MOV-9_FTO	N	
%FA-3	MOV-10	MOV-10_FTO	N	
%FA-3	MOV-11	MOV-11_FTO	N	
%FA-3	MOV-13	MOV-13_FTC	Y	Spurious opening of PORV and failure to open PORV path

CDF FIRE PRA MODEL MAPPING TABLE (USE THE EVENT TREES AND FAULT TREES BELOW)				
Fire Initiating Event	**Equipment ID**	**PRA Event Identifier**	**Additional model changes are required to facilitate mapping? (Y or N)**	**Describe modeling strategy to facilitate mapping.**
%FA-3	MOV-13	MOV-13_TC	Y	Spurious closure of PORV
%FA-3	MOV-14	MOV-14_FTO	N	
%FA-3	MOV-15	MOV-15_FTO	N	
%FA-3	MOV-18	MOV-18_FTO	N	Insufficient flow from AFW pump C
%FA-3	LI-1	LI-1_FL	Y	Spurious instrumentation failure causes operator to prematurely switchover to recirculation
%FA-3	LI-1	LI-1_FH	Y	Operator fails to switchover to recirculation due to instrumentation failure
%FA-3	LI-2	LI-2_FL	Y	Spurious instrumentation failure causes operator to prematurely switchover to recirculation
%FA-3	LI-2	LI-2_FH	Y	Operator fails to switchover to recirculation due to instrumentation failure
%FA-3	LI-3	LI-3_FH	Y	Spurious instrumentation failure causes operator to prematurely switchover to recirculation

CDF FIRE PRA MODEL MAPPING TABLE (USE THE EVENT TREES AND FAULT TREES BELOW)				
Fire Initiating Event	**Equipment ID**	**PRA Event Identifier**	**Additional model changes are required to facilitate mapping? (Y or N)**	**Describe modeling strategy to facilitate mapping.**
%FA-3	LI-4	LI-4_FH	Y	Spurious instrumentation failure causes operator to prematurely switchover to recirculation
%FA-3	LI-5	LI-5_FH	Y	Spurious instrumentation failure causes operator to fail to initiate feed and bleed
%FA-3	LI-6	LI-6_FH	Y	Spurious instrumentation failure causes operator to fail to initiate feed and bleed
%FA-3	TI-1	TI-1_FL	Y	Failure to isolate letdown and establish flow from injection tank due to instrumentation failure
%FA-3	PT-1	PT-1_FH	Y	
%FA-3	PT-1	PT-1_FL	Y	Operator fails to establish feed and bleed cooling
%FA-3	A-1	ANN-1_FH	Y	Operator shuts down AFW pump A due to high motor temperature alarm.
%FA-3	SWGR-A	EPS-4VBUSAF-1st	N	
%FA-3	SWGR-A	EPS-4VBUSAF-2nd	N	

CDF FIRE PRA MODEL MAPPING TABLE (USE THE EVENT TREES AND FAULT TREES BELOW)				
Fire Initiating Event	**Equipment ID**	**PRA Event Identifier**	**Additional model changes are required to facilitate mapping? (Y or N)**	**Describe modeling strategy to facilitate mapping.**
%FA-3	SWGR-B	EPS-4VBUSBF-1st	N	
%FA-3	SWGR-B	EPS-4VBUSBF-2nd	N	
%FA-3	SWGR-1	EPS-4VBUS1F	N	
%FA-3	SUT-1	SUTF	N	
%FA-3	UAT-1	UATF	N	
%FA-3	EDG-A	EPS-DGAF	N	
%FA-3	EDG-B	EPS-DGBF	N	
%FA-3	LC-1	EPS-480VLC1F	N	
%FA-3	LC-A	EPS-480VLCAF	N	
%FA-3	LC-B	EPS-480VLCBF	N	
%FA-3	INV-A	EPS-120VBUSAINVF	N	
%FA-3	INV-B	EPS-120VBUSBINVF	Y	Required for instrumentation
%FA-4A				

CDF FIRE PRA MODEL MAPPING TABLE (USE THE EVENT TREES AND FAULT TREES BELOW)				
Fire Initiating Event	**Equipment ID**	**PRA Event Identifier**	**Additional model changes are required to facilitate mapping? (Y or N)**	**Describe modeling strategy to facilitate mapping.**
%FA-4A				
%FA-4A				
%FA-4A				
%FA-4A				
%FA-4A				
%FA-4B				
%FA-4B				
%FA-4B				
%FA-4B				
%FA-4B				
%FA-4B				
%FA-4B				
%FA-4B				

CDF FIRE PRA MODEL MAPPING TABLE (USE THE EVENT TREES AND FAULT TREES BELOW)				
Fire Initiating Event	**Equipment ID**	**PRA Event Identifier**	**Additional model changes are required to facilitate mapping? (Y or N)**	**Describe modeling strategy to facilitate mapping.**
%FA-4B				
%FA-4B				
%FA-5				
%FA-6				
%FA-7				
%FA-7				
%FA-7				
%FA-7				
%FA-7				
%FA-7				
%FA-7				
%FA-7				
%FA-7				

CDF FIRE PRA MODEL MAPPING TABLE (USE THE EVENT TREES AND FAULT TREES BELOW)				
Fire Initiating Event	**Equipment ID**	**PRA Event Identifier**	**Additional model changes are required to facilitate mapping? (Y or N)**	**Describe modeling strategy to facilitate mapping.**
%FA-7				
%FA-7				
%FA-7				
%FA-7				
%FA-8A				
%FA-8A				
%FA-8B				
%FA-8B				
%FA-9	RHR-B	RHRB_FTS	N	
%FA-9	RHR-B	RHRB_FTR	N	
%FA-9	AFW-A	AFWA-FTS	N	
%FA-9	AFW-A	AFWA-FTR	N	
%FA-9	AFW-B	AFWB-FTS	N	

CDF FIRE PRA MODEL MAPPING TABLE (USE THE EVENT TREES AND FAULT TREES BELOW)				
Fire Initiating Event	**Equipment ID**	**PRA Event Identifier**	**Additional model changes are required to facilitate mapping? (Y or N)**	**Describe modeling strategy to facilitate mapping.**
%FA-9	AFW-B	AFWB-FTR	N	
%FA-9	AOV-1 (SOV-1)	AOV-1_TO	Y	Spurious opening of PORV and failure to open PORV path
%FA-9	AOV-1 (SOV-1)	AOV-1_FTO	N	
%FA-9	AOV-2 (SOV-2)	AOV-2_FTC	Y	Failure to isolate letdown and establish flow from injection tank
%FA-9	AOV-2 (SOV-2)	AOV-2_TC	Y	Spurious closure of letdown and opening of AOV-3 lead to PORV opening
%FA-9	AOV-3 (SOV-3)	AOV-3-FTC	N	
%FA-9	AOV-3 (SOV-3)	AOV-3_TO	Y	Spurious closure of letdown and opening of AOV-3 lead to PORV opening
%FA-9	AOV-4 (SOV-4)	AOV-4_TO	Y	Spurious opening of atmospheric dump valve
%FA-9	MOV-1	MOV-1_FTO	N	
%FA-9	MOV-2	MOV-2_FTC	N	

CDF FIRE PRA MODEL MAPPING TABLE (USE THE EVENT TREES AND FAULT TREES BELOW)				
Fire Initiating Event	**Equipment ID**	**PRA Event Identifier**	**Additional model changes are required to facilitate mapping? (Y or N)**	**Describe modeling strategy to facilitate mapping.**
%FA-9	MOV-3	MOV-3_TO	Y	Containment sump flow path open
%FA-9	MOV-4	MOV-4_TO	Y	Containment sump flow path open
%FA-9	MOV-7	MOV-7_TO	Y	Interfacing Systems LOCA at RCS/RHR Interface (2 MOVs in series)
%FA-9	MOV-8	MOV-8_TO	Y	Interfacing Systems LOCA at RCS/RHR Interface (2 MOVs in series)
%FA-9	MOV-9	MOV-9_FTO	N	
%FA-9	MOV-10	MOV-10_FTO	N	
%FA-9	MOV-11	MOV-11_FTO	N	
%FA-9	MOV-13	MOV-13_FTC	Y	Spurious opening of PORV and failure to open PORV path
%FA-9	MOV-13	MOV-13_TC	Y	Spurious closure of PORV
%FA-9	TI-1	TI-1_FL	Y	Failure to isolate letdown and establish flow from injection tank due to instrumentation failure

CDF FIRE PRA MODEL MAPPING TABLE (USE THE EVENT TREES AND FAULT TREES BELOW)				
Fire Initiating Event	**Equipment ID**	**PRA Event Identifier**	**Additional model changes are required to facilitate mapping? (Y or N)**	**Describe modeling strategy to facilitate mapping.**
%FA-9	A-1	ANN-1_FH	Y	Operator shuts down AFW pump A due to high motor temperature alarm.
%FA-9	SWGR-B	EPS-4VBUSBF-1st	N	
%FA-9	SWGR-B	EPS-4VBUSBF-2nd	N	
%FA-9	MCC-A1	EPS-480VMCCA1F	N	
%FA-9	MCC-B1	EPS-480VMCCB1F	N	
%FA-9	BC-A	EPS-BCAF	N	
%FA-9	BC-B	EPS-BCBF	N	
%FA-9	INV-A	EPS-120VBUSAINVF	N	
%FA-9	INV-B	EPS-120VBUSBINVF	Y	Required for instrumentation
%FA-9	VITAL-A	EPS-120VBUSAF	N	
%FA-9	VITAL-B	EPS-120VBUSBF	Y	Required for instrumentation
%FA-10	HPI-A	HPIA_FTS	N	

CDF FIRE PRA MODEL MAPPING TABLE (USE THE EVENT TREES AND FAULT TREES BELOW)				
Fire Initiating Event	**Equipment ID**	**PRA Event Identifier**	**Additional model changes are required to facilitate mapping? (Y or N)**	**Describe modeling strategy to facilitate mapping.**
%FA-10	HPI-A	HPIA_FTR	N	
%FA-10	AFW-A	AFWA-FTS	N	
%FA-10	AFW-A	AFWA-FTR	N	
%FA-10	AOV-1 (SOV-1)	AOV-1_FTO	N	
%FA-10	MOV-1	MOV-1_FTO	N	
%FA-10	MOV-3	MOV-3_TO	Y	Containment sump flow path open
%FA-10	SWGR-A	EPS-4VBUSAF-1st	N	
%FA-10	EDG-A	EPS-DGAF	N	
%FA-10	EDG-B	EPS-DGBF	N	
%FA-10	LC-A	EPS-480VLCAF	N	
%FA-10	SST-A	EPS-480VLCAF	N	
%FA-10	MCC-A1	EPS-480VMCCA1F	N	
%FA-10	BC-A	EPS-BCAF	N	

CDF FIRE PRA MODEL MAPPING TABLE (USE THE EVENT TREES AND FAULT TREES BELOW)				
Fire Initiating Event	**Equipment ID**	**PRA Event Identifier**	**Additional model changes are required to facilitate mapping? (Y or N)**	**Describe modeling strategy to facilitate mapping.**
%FA-10	BAT-A	EPA-BATA	N	
%FA-10	DC BUS-A	EPS-125VDCBUSAF	N	
%FA-10	PNL-A	EPS-125VDCPNLAF	N	
%FA-10	INV-A	EPS-120VBUSAINVF	N	
%FA-10	VITAL-A	EPS-120VBUSAF	N	
%FA-11	HPI-B	HPIB_FTS	N	
%FA-11	HPI-B	HPIB_FTR	N	
%FA-11	RHR-B	RHRB_FTS	N	
%FA-11	RHR-B	RHRB_FTR	N	
%FA-11	AFW-B	AFWB-FTS	N	
%FA-11	AFW-B	AFWB-FTR	N	
%FA-11	AOV-4 (SOV-4)	AOV-4_TO	Y	Spurious opening of atmospheric dump valve
%FA-11	MOV-2	MOV-2_FTC	N	

CDF FIRE PRA MODEL MAPPING TABLE (USE THE EVENT TREES AND FAULT TREES BELOW)				
Fire Initiating Event	**Equipment ID**	**PRA Event Identifier**	**Additional model changes are required to facilitate mapping? (Y or N)**	**Describe modeling strategy to facilitate mapping.**
%FA-11	MOV-4	MOV-4_TO	Y	Containment sump flow path open
%FA-11	MOV-11	MOV-11_FTO	N	
%FA-11	SWGR-B	EPS-4VBUSBF-1st	N	
%FA-11	SWGR-B	EPS-4VBUSBF-2nd	N	
%FA-11	LC-B	EPS-480VLCBF	N	
%FA-11	SST-B	EPS-480VLCBF	N	
%FA-11	MCC-B1	EPS-480VMCCB1F	N	
%FA-11	BC-B	EPS-BCBF	N	
%FA-11	BAT-B	EPA-BATB	N	
%FA-11	DC BUS-B	EPS-125VDCBUSBF	N	
%FA-11	PNL-B	EPS-125VDCPNLBF	N	
%FA-11	INV-B	EPS-120VBUSBINVF	Y	Required for instrumentation
%FA-11	VITAL-B	EPS-120VBUSBF	Y	Required for instrumentation

CDF FIRE PRA MODEL MAPPING TABLE (USE THE EVENT TREES AND FAULT TREES BELOW)				
Fire Initiating Event	**Equipment ID**	**PRA Event Identifier**	**Additional model changes are required to facilitate mapping? (Y or N)**	**Describe modeling strategy to facilitate mapping.**
%FA-12	AFW-C	AFWC-FTS	N	
%FA-12	AFW-C	AFWC-FTR	N	
%FA-12	RCP-1	RCP1-FTT	Y	RCP fails to trip given loss of CCW
%FA-12	AOV-4 (SOV-4)	AOV-4_TO	Y	Spurious opening of atmospheric dump valve
%FA-12	COMP-1	COMP1_FTR	N	Failure of instrument air
%FA-12	MOV-5	MOV-5_FTO	N	
%FA-12	MOV-6	MOV-6_FTO	N	
%FA-12	MOV-7	MOV-7_TO	Y	Interfacing Systems LOCA at RCS/RHR Interface (2 MOVs in series)
%FA-12	MOV-8	MOV-8_TO	Y	Interfacing Systems LOCA at RCS/RHR Interface (2 MOVs in series)
%FA-12	MOV-10	MOV-10_FTO	N	
%FA-12	MOV-11	MOV-11_FTO	N	

CDF FIRE PRA MODEL MAPPING TABLE (USE THE EVENT TREES AND FAULT TREES BELOW)				
Fire Initiating Event	**Equipment ID**	**PRA Event Identifier**	**Additional model changes are required to facilitate mapping? (Y or N)**	**Describe modeling strategy to facilitate mapping.**
%FA-12	MOV-14	MOV-14_FTO	N	
%FA-12	MOV-15	MOV-15_FTO	N	
%FA-12	MOV-18	MOV-18_FTO	N	
%FA-12	LI-1	LI-1_FL	Y	Spurious instrumentation failure causes operator to prematurely switchover to recirculation
%FA-12	LI-2	LI-1_FH	Y	Operator fails to switchover to recirculation due to instrumentation failure
%FA-12	LI-2	LI-2_FL	Y	Spurious instrumentation failure causes operator to prematurely switchover to recirculation
%FA-12	LI-2	LI-2_FH	Y	Operator fails to switchover to recirculation due to instrumentation failure
%FA-12	LI-3	LI-3_FH	Y	Spurious instrumentation failure causes operator to prematurely switchover to recirculation
%FA-12	LI-4	LI-4_FH	Y	Spurious instrumentation failure causes operator

CDF FIRE PRA MODEL MAPPING TABLE (USE THE EVENT TREES AND FAULT TREES BELOW)				
Fire Initiating Event	**Equipment ID**	**PRA Event Identifier**	**Additional model changes are required to facilitate mapping? (Y or N)**	**Describe modeling strategy to facilitate mapping.**
				to prematurely switchover to recirculation
%FA-12	SWGR-A	EPS-4VBUSAF-1st	N	
%FA-12	SWGR-A	EPS-4VBUSAF-2nd	N	
%FA-12	SWGR-B	EPS-4VBUSBF-1st	N	
%FA-12	SWGR-B	EPS-4VBUSBF-2nd	N	
%FA-12	SWGR-1	EPS-4VBUS1F	N	
%FA-12	SUT-1	SUTF	N	
%FA-12	UAT-1	UATF	N	
%FA-12	EDG-A	EPS-DGAF	N	
%FA-12	EDG-B	EPS-DGBF	N	
%FA-12	LC-1	EPS-480VLC1F	N	
%FA-12	SST-1	EPS-480VLC1XTF	N	
%FA-12	MCC-1	EPS-480VMCC1F	N	

CDF FIRE PRA MODEL MAPPING TABLE (USE THE EVENT TREES AND FAULT TREES BELOW)				
Fire Initiating Event	**Equipment ID**	**PRA Event Identifier**	**Additional model changes are required to facilitate mapping? (Y or N)**	**Describe modeling strategy to facilitate mapping.**
%FA-12	BC-1	EPS-BC1F	N	
%FA-12	BAT-1	EPS-SB	N	
%FA-12	DC BUS-1	EPS-125VNSDCBUSF	N	
%FA-13	LI-1	LI-1_FL	Y	Spurious instrumentation failure causes operator to prematurely switchover to recirculation
%FA-13	LI-1	LI-1_FH	Y	Operator fails to switchover to recirculation due to instrumentation failure
%FA-13	LI-2	LI-2_FL	Y	Spurious instrumentation failure causes operator to prematurely switchover to recirculation
%FA-13	LI-2	LI-2_FH	Y	Operator fails to switchover to recirculation due to instrumentation failure
%FA-13	SWGR-A	EPS-4VBUSAF-1st	N	
%FA-13	SWGR-B	EPS-4VBUSBF-2nd	N	

CDF FIRE PRA MODEL MAPPING TABLE (USE THE EVENT TREES AND FAULT TREES BELOW)				
Fire Initiating Event	**Equipment ID**	**PRA Event Identifier**	**Additional model changes are required to facilitate mapping? (Y or N)**	**Describe modeling strategy to facilitate mapping.**
%FA-13	SWGR-1	EPS-4VBUS1F	N	
%FA-13	SUT-1	SUTF	N	
%FA-13	UAT-1	UATF	N	
%FA-15	BAT-1	EPS-SB	N	

Step 2: Develop LERF or CLERP Model

LERF FIRE PRA MODEL MAPPING TABLE (USE THE EVENT TREES AND FAULT TREES BELOW)				
Fire Initiating Event	**Equipment ID**	**PRA Event Identifier**	**Additional model changes are required to facilitate mapping? (Y or N)**	**Describe modeling strategy to facilitate mapping.**
%FA-?				
%FA-?				
%FA-?				
%FA-?				
%FA-?				
%FA-?				
%FA-?				

Task 5 Inputs

Table 1: Target Equipment Loss Report

Equipment ID	Equipment Description	Equipment Type	Location	Desired Position/ Status	Target Loss Locations
HPI-A	High pressure safety injection pump A	Pump	Aux Bldg. El. 0 Ft	On	1, 2, 3, 10
HPI-B	High pressure safety injection pump B	Pump	Aux Bldg. El. 0 Ft	On	1, 2, 3, 11
RHR-B	Residual heat removal pump B	Pump	Aux Bldg. El. -20 Ft	On	1, 2, 3, 4A, 9, 11
AFW-A	Motor-driven AFW pump A	Pump	Aux Bldg. EL. 0 Ft	On	1, 3, 4B, 9, 10
AFW-B	Steam-driven AFW pump B	Pump	Aux Bldg. EL. 0 Ft	On	1, 3, 4B, 9, 11
AFW-C	Diesel-driven AFW pump C	Pump	Turbine Bldg. El. 0 Ft	On	1, 3, 12
RCP-1	Reactor coolant pump 1	Pump	Containment	Off	1, 2, 3, 7, 12
COMP-1	Instrument air compressor	Compressor	Turbine Bldg. El. 0 Ft	Cycle	12
AOV-1 (SOV-1)	Power operated relief valve	AOV	Containment	Closed	1, 3, 7, 9
				Open	1, 3, 7, 9, 10
AOV-2 (SOV-2)	Letdown isolation valve	AOV	Aux Bldg. El. 0 Ft	Closed	1, 2, 3, 9

Equipment ID	Equipment Description	Equipment Type	Location	Desired Position/ Status	Target Loss Locations
AOV-3 (SOV-3)	Charging pump injection valve	AOV	Aux Bldg. El. 0 Ft	Closed	1, 2, 3, 9
AOV-4 (SOV-4)	Atmospheric dump valve	AOV	Turbine Bldg. El. 0 Ft	Closed	1,3,4B,9,11,12
MOV-1	HPI discharge valve	MOV	Aux Bldg. El. 0 Ft	Open	1, 2, 3, 9, 10
MOV-2	VCT isolation valve	MOV	Aux Bldg. El. 0 Ft	Closed	1, 2, 3, 9, 11
MOV-3	Cont. sump recirc. valve	MOV	Aux Bldg. El. -20 Ft	Open/ Closed	1, 2, 3, 4A, 9, 10
MOV-4	Cont. sump recirc. valve	MOV	Aux Bldg. El. -20 Ft	Open/ Closed	1, 2, 3, 4A, 9, 11
MOV-5	RWST isolation valve	MOV	Aux Bldg. El. 0 Ft	Open	1, 2, 3, 12
MOV-6	RWST isolation valve	MOV	Aux Bldg. El. 0 Ft	Open	1, 2, 3, 12
MOV-7	RHR inboard suction valve	MOV	Containment	Closed	4A,7,9,12
MOV-8	RHR outboard suction valve	MOV	Aux Bldg. El. -20 Ft	Closed	4A,9,12
MOV-9	HPI discharge valve	MOV	Aux Bldg. El. 0 Ft	Open	1,2,3,,9
MOV-10	AFW pump A discharge valve	MOV	Aux Bldg. EL. 0 Ft	Open	1,3,4B,9,12
MOV-11	AFW pump B discharge valve	MOV	Aux Bldg. EL. 0 Ft	Open	1,3,4B,9,11,12
MOV-13	PORV block valve	MOV	Containment	Open/ Closed	1, 3, 7, 9
MOV-14	AFW pump B turbine steam line isolation valve	MOV	Turbine Bldg. El. 0 Ft	Open	1, 3, 4B, 12
MOV-15	AFW pump B steam inlet throttle valve	MOV	Turbine Bldg. El. 0 Ft	Throttled	1, 3, 4B, 12
MOV-18	AFW pump C discharge valve	MOV	Turbine Bldg. El. 0 Ft	Open	1, 3, 12

Equipment ID	Equipment Description	Equipment Type	Location	Desired Position/ Status	Target Loss Locations
LI-1	RWST level	Instrument	Yard	Available	1, 3, 12, 13
LI-2	RWST level	Instrument	Yard	Available	1, 3, 12, 13
LI-3	Cont. sump level	Instrument	Containment	Available	1, 3, 7, 12
LI-4	Cont. sump level	Instrument	Containment	Available	1, 3, 7, 12
LI-5	SG secondary level	Instrument	Containment	Available	1, 3, 7
LI-6	SG secondary level	Instrument	Containment	Available	1, 3, 7
TI-1	Letdown heat exchanger outlet temperature	Instrument	Aux Bldg El. 0 Ft	Available	1, 2, 3, 9
PT-1	RCS pressure	Instrument	Containment	Available	1, 3, 7
A-1	AFW motor high temperature	Annunciator	SWG Access Room	Non spurious	1, 2, 3, 9, 4B
SWGR-A	Train A 4160 V switchgear	Switchgear	Switchgear Room A	Energized from SUT-1	1, 3, 10, 12, 13
				Energized from EDG-A	1, 3, 8A, 10, 12
SWGR-B	Train B 4160 V switchgear	Switchgear	Switchgear Room B	Energized from SUT-1	1, 3, 9, 11, 12, 13
				Energized from EDG-B	1, 3, 8B, 9, 11, 12
SWGR-1	Non-safety 4160 V switchgear	Switchgear	Turbine Bldg. El. 0ft	Energized	1, 3, 12, 13
SUT-1	Startup transformer	Transformer	Yard	Energized	1, 3, 12, 13

Equipment ID	Equipment Description	Equipment Type	Location	Desired Position/ Status	Target Loss Locations
UAT-1	Auxiliary transformer	Transformer	Yard	Energized	1, 3, 12, 13
EDG-A	Train A emergency diesel generator	Diesel Generator	DG Bldg.	On	1, 3, 8A, 10, 12
EDG-B	Train B emergency diesel generator	Diesel Generator	DG Bldg.	On	1, 3, 8B, 10, 12
LC-1	Non-safety 480 V load center	Load Center	Turbine Bldg. El. 0 ft	Energized	1, 3, 12
LC-A	Train A 480 V load center	Load Center	Switchgear Room A	Energized	1, 3,10
LC-B	Train B 480 V load center	Load Center	Switchgear Room B	Energized	1, 3, 11
SST-1	Non-safety station service transformer	Transformer	Turbine Bldg. El. 0 F	Energized	12
SST-A	Train A station service transformer	Transformer	Switchgear Room A	Energized	10
SST-B	Train B station service transformer	Transformer	Switchgear Room B	Energized	11
MCC-1	Non-safety 480 V motor control center	Motor Control Center	Turbine Bldg El. 0 Ft	Energized	12
MCC-A1	Train A 480 V motor control center	Motor Control Center	SWG Access Room	Energized	9, 10
MCC-B1	Train B 480 V motor control center	Motor Control Center	SWG Access Room	Energized	9, 11
BC-1	Non-safety battery charger	Battery Charger	Turbine Bldg El. 0 Ft	Energized	12
BC-A	Train A battery charger	Battery Charger	Switchgear Room A	Energized	9, 10
BC-B	Train B battery charger	Battery Charger	Switchgear Room B	Energized	9, 11
BAT-1	Non-safety battery	Battery	Turbine Bldg El. 0 Ft	Available	12, 15

Equipment ID	Equipment Description	Equipment Type	Location	Desired Position/ Status	Target Loss Locations
BAT-A	Train A battery	Battery	Battery Room A	Available	5, 10
BAT-B	Train B battery	Battery	Battery Room B	Available	6, 11
DC BUS-1	Non-safety 250 VDC bus	DC Bus	Turbine Bldg El. 0 Ft	Energized	12
DC BUS-A	Train A 125 VDC bus	DC Bus	Switchgear Room A	Energized	10
DC BUS-B	Train B 125 VDC bus	DC Bus	Switchgear Room B	Energized	11
PNL-A	Train A 125 VDC panel	Panel board	Switchgear Room A	Energized	10
PNL-B	Train B 125 VDC panel	Panel board	Switchgear Room B	Energized	11
INV-A	Train A inverter	Inverter	Switchgear Room A	Energized	3, 9, 10
INV-B	Train B inverter	Inverter	Switchgear Room B	Energized	3, 9, 11
VITAL-A	Train A 120 VAC vital bus	120VAC Bus	SWG Access Room	Energized	9, 10
VITAL-B	Train B 120 VAC vital bus	120VAC Bus	SWG Access Room	Energized	9, 11

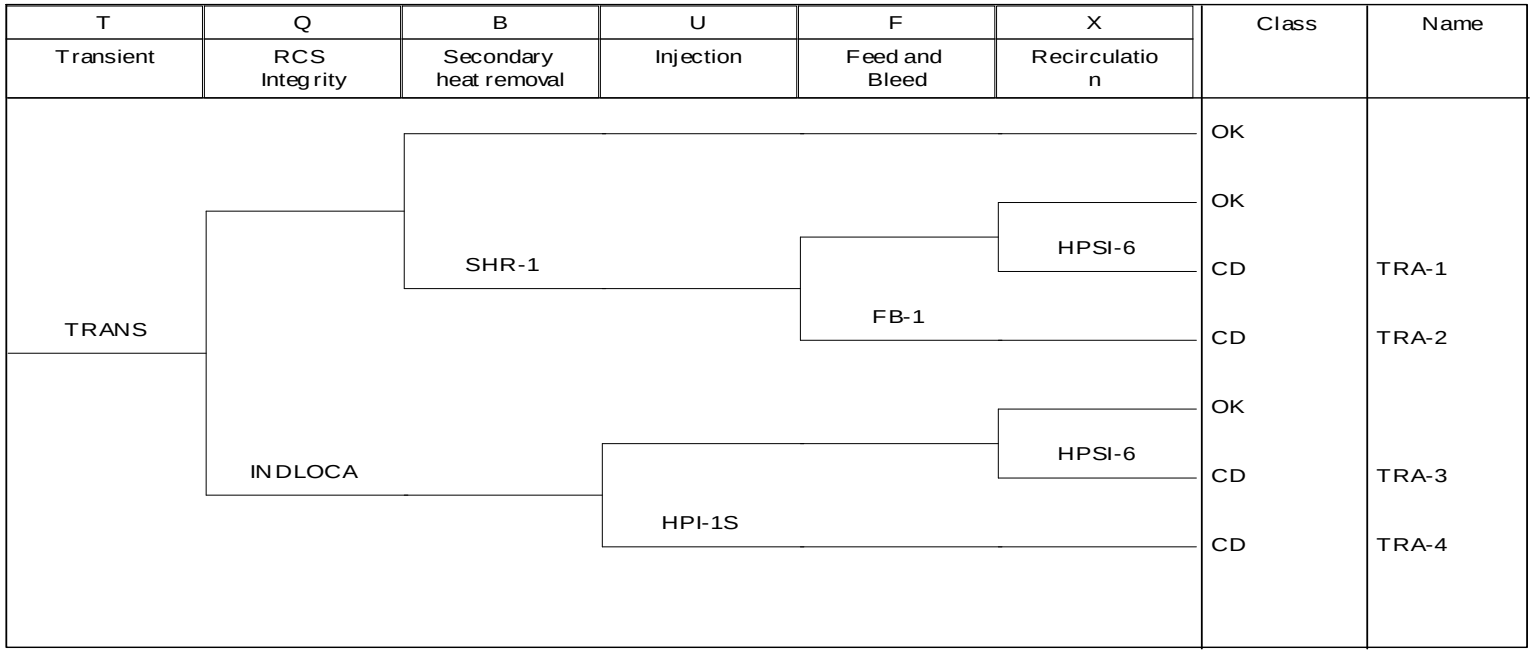

Figure 1: Transient Event Tree

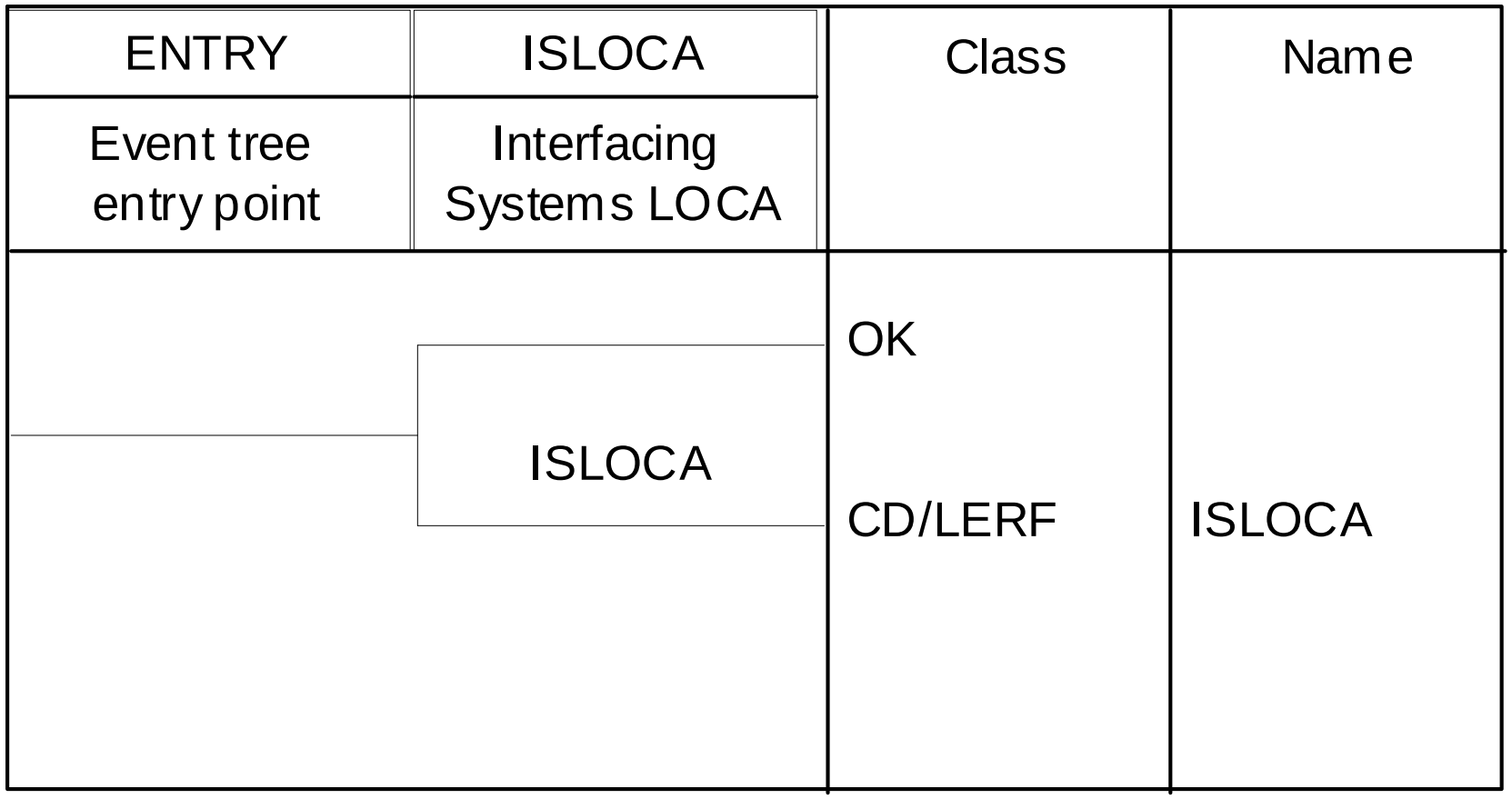

Figure 2: ISLOCA Event Tree