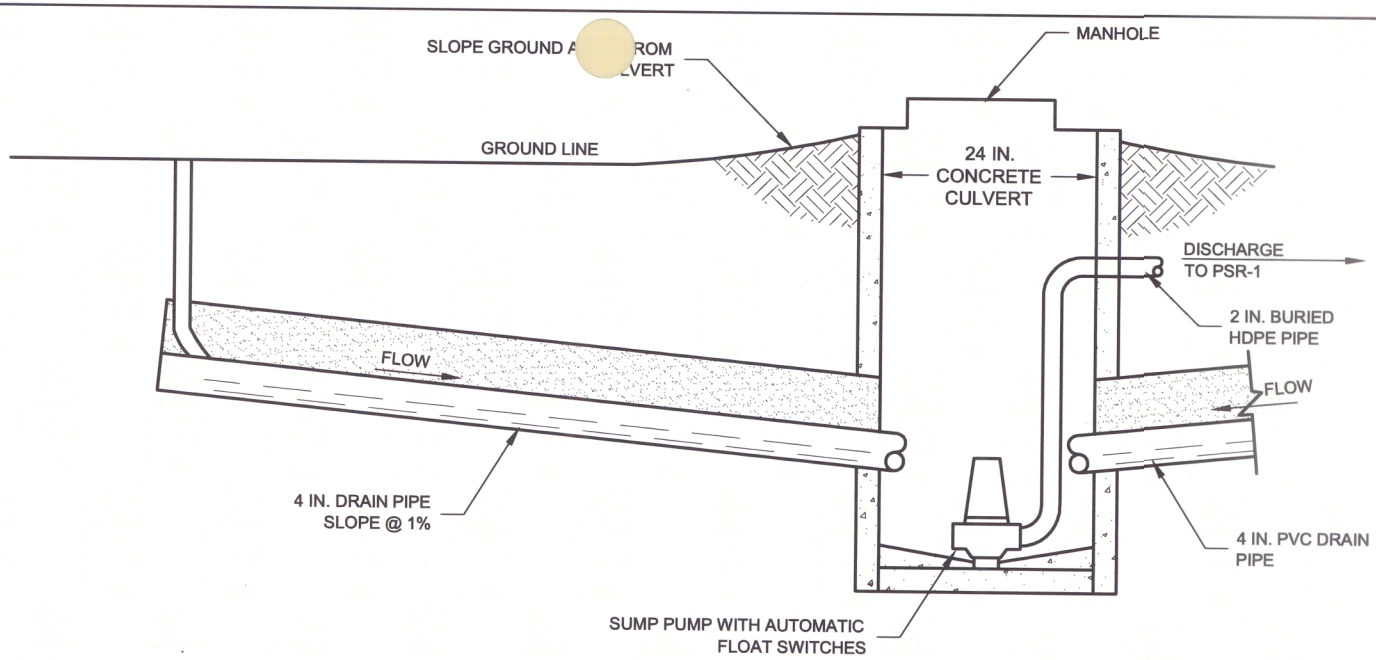

SECTION VIEW - INTERCEPTOR TRENCH
NOT TO SCALE

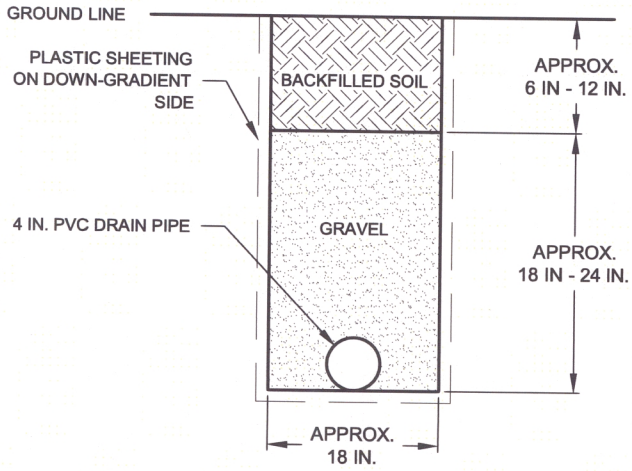

TYPICAL SECTION VIEW - TRENCH
NOT TO SCALE

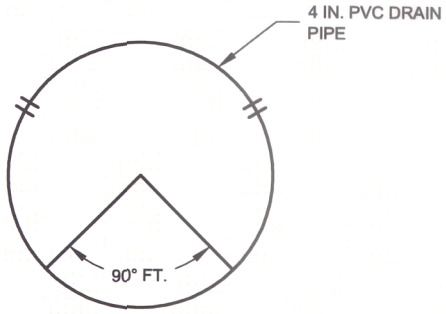

TRENCH BOTTOM
SECTION VIEW - PIPE
NOT TO SCALE

REVISIONS		
NO.	DATE	BY

CAMECO

Cameco Resources
NRC SOURCE MATERIAL
LICENSE SUA-1548

SMITH RANCH

FIGURE 3.34
PSR-1 INTERCEPTOR
TRENCH DETAILS

PAGE SIZE	SCALE	DEPARTMENT:	REV
8.5"X11"	SEE GRAPHIC SCALE	DEPARTMENT	0

GEOL. BY: GEN_INEO-1 DATE: GEN_INEO-4
ENG. BY: GEN_INEO-2 DATE: GEN_INEO-5
DRAFT. BY: GEN_INEO-3 DATE: 1/19/12

Drawing Location:
\\SBSERVER\PROJECT\WYCR102 SRH-NB NRC LICENSE RENEWAL\ACAD\DESIGN\SUBMITTAL 9-19-2011\WYCR102_FIGURE OP-15.DWG

\\sbserver\project\WYCR102 SRH-NB NRC License Renewal\ACAD\DESIGN\Submittal 9-19-2011\WYCR102_FIGURE OP-15.dwg, PSR-1 INTERCEPTOR TRENCH DETAILS, 1/27/2012 11:25:25 AM, som, Xerox 7655 PCL6