UNITED STATES
NUCLEAR REGULATORY COMMISSION
REGION IV
1600 EAST LAMAR BLVD
ARLINGTON, TEXAS 76011-4511

April 4, 2012

Matthew W. Sunseri, President and
Chief Executive Officer
Wolf Creek Nuclear Operating Corporation
P.O. Box 411
Burlington, KS 66839

SUBJECT: WOLF CREEK NUCLEAR OPERATING CORPORATION – NRC AUGMENTED INSPECTION TEAM REPORT 05000482/2012008

Dear Mr. Sunseri:

On March 6, 2012, the U. S. Nuclear Regulatory Commission (NRC) completed an inspection at your Wolf Creek Generating Station. The enclosed report documents the inspection results, which were discussed with you and other members of your staff during a public exit meeting on March 6, 2012.

On January 13, 2012, Wolf Creek Generating Station declared a Notification of Unusual Event (NOUE) at 2:15 p.m. following an automatic reactor trip and loss of offsite power. The loss of offsite power was the result of two separate electrical failures: the failure of a main generator output breaker, followed by an unexpected loss of power to the startup transformer, which together caused the switchyard to be deenergized. All safety systems initially responded as expected, and emergency diesel generators automatically powered safety-related equipment.

Wolf Creek terminated the NOUE after offsite power was restored to safety-related buses approximately 3 hours into the event, and the plant was cooled down. The licensee restored power to most of the plant systems on January 17 after verifying that the non-vital switchboards were safe to energize. There were no radiological releases due to this event.

In accordance with Management Directive 8.3, “NRC Incident Investigation Program,” deterministic and conditional risk criteria were used to evaluate the level of NRC response for this operational event. Because two deterministic criteria were met (multiple failures in systems used to mitigate the event, and repetitive failures or events involving safety-related systems), and the conditional core damage probability for the event was estimated to be in the overlap range for a special inspection/augmented inspection, Region IV concluded that the NRC response should be an augmented inspection team.

Based on inspection, the team concluded that: (1) your operators responded to the event in a manner that protected public health and safety; (2) safety system functions were maintained; and (3) equipment issues, some of which you had knowledge of but hadn’t corrected before this event, complicated the response to this event. The purpose of this inspection was to gather facts and identify issues requiring follow-up, and, as such, no findings were identified. Items requiring additional follow-up are documented as unresolved items in the enclosed report. NRC

inspectors have verified that those equipment issues required to be resolved before plant startup were adequately resolved.

In accordance with 10 CFR 2.390 of the NRC's "Rules of Practice," a copy of this letter, its enclosure, and your response (if any) will be available electronically for public inspection in the NRC Public Document Room or from the Publicly Available Records (PARS) component of the NRC's document system (ADAMS). ADAMS is accessible from the NRC Web site at http://www.nrc.gov/reading-rm/adams.html (the Public Electronic Reading Room).

Sincerely,

/RA/

Elmo E. Collins
Regional Administrator

Docket No.: 05000482
License No: NPF-42

Enclosure: Inspection Report 05000482/2012008
w/ Attachments:
1. Supplemental Information
2. Sequence of Events
3. Augmented Inspection Team Charter

cc w/ encl: Electronic Distribution

DISTRIBUTION:
Regional Administrator (Elmo.Collins@nrc.gov)
Deputy Regional Administrator (Art.Howell@nrc.gov)
DRP Director (Kriss.Kennedy@nrc.gov)
DRP Deputy Director (Troy.Pruett@nrc.gov)
DRS Director (Anton.Vegel@nrc.gov)
DRS Deputy Director (Tom.Blount@nrc.gov)
Senior Resident Inspector (Chris.Long@nrc.gov)
Resident Inspector (Charles.Peabody@nrc.gov)
WC Administrative Assistant (Shirley.Allen@nrc.gov)
Branch Chief, DRS/OB (Mark.Haire@nrc.gov)
Branch Chief, DRP/B (Neil.OKeefe@nrc.gov)
Senior Project Engineer, DRP/B (Leonard.Willoughby@nrc.gov)
Project Engineer, DRP/B (Nestor.Makris@nrc.gov)
Public Affairs Officer (Victor.Dricks@nrc.gov)
Public Affairs Officer (Lara.Uselding@nrc.gov)
Project Manager (Randy.Hall@nrc.gov)
Branch Chief, DRS/TSB (Ryan.Alexander@nrc.gov)
RITS Coordinator (Marisa.Herrera@nrc.gov)
Regional Counsel (Karla.Fuller@nrc.gov)
Congressional Affairs Officer (Jenny.Weil@nrc.gov)
OEMail Resource
RIV/ETA: OEDO (Lydia.Chang@nrc.gov)
DRS/TSB STA (Dale.Powers@nrc.gov)
RSLO (Bill.Maier@nrc.gov)
D/DIR, DORL (Louise.Lund@nrc.gov)
PM (Randy.Hall@nrc.gov)
D: NRR (Eric.Leeds@nrc.gov)
D: NSIR (Jim.Wiggins@nrc.gov)
NRR/LPL4 (Michael.Markley@nrc.gov)
NRR/IOEB (Harold.Chernoff@nrc.gov)
EDO (Bill.Borchardt@nrc.gov)
DEDR (Martin.Virgilio@nrc.gov)
NRR_Reactive_Inspection Resource (NRR_Reactive_Inspection@nrc.gov)

File located: S:\DRP\DRPDIR_WC

SUNSI Rev Compl.	☑Yes ☐ No	ADAMS	☑Yes ☐ No	Reviewer Initials	MSH
Publicly Avail.	☑Yes ☐ No	Sensitive	☐Yes ☑ No	Sens. Type Initials	MSH
AIT Member	AIT Member	AIT Member	AIT Member	AIT Leader	C:DRP/B
BCorrell	JDixon	JWatkins	MRunyan	MHaire	NO'Keefe
/RA/	***/RA/***	***/RA/***	***/RA/***	***/RA/***	***/RA/***
03/23/2012	03/26/2012	03/22/2012	03/22/2012	03/28/2012	03/30/12
D:DRP	RA				
KKennedy	ECollins				
/RA/	**/RA/**				
04/02/12	04/04/12				

OFFICIAL RECORD COPY

U.S. NUCLEAR REGULATORY COMMISSION
REGION IV

Docket:	05000482
License:	NPF-42
Report:	05000482/2012008
Licensee:	Wolf Creek Nuclear Operating Corporation
Facility:	Wolf Creek Generating Station
Location:	1550 Oxen Lane NE Burlington, Kansas
Dates:	January 30 through March 6, 2012
Team Leader:	Mark Haire, Operations Branch Chief
Inspectors:	Mike Runyan, RIV Senior Reactor Analyst John Dixon, RIV Senior Resident Inspector at South Texas Project Brian Correll, RIV Reactor Inspector John Watkins, RIV Reactor Inspector Gurcharan Matharu, NRR Senior Electrical Engineer Jesse Robles, NRR Reactor Systems Engineer
Approved By:	Neil O'Keefe, Chief, Projects Branch B

TABLE OF CONTENTS

SUMMARY OF FINDINGS

IR 05000482/2012008, 01/30/2012 through 03/06/2012, Wolf Creek Generating Station; Augmented Inspection Team.

An Augmented Inspection Team (AIT) was dispatched to the site on January 30, 2012, to assess the facts and circumstances surrounding a loss of offsite power that occurred on January 13, 2012. The AIT was established in accordance with NRC Management Directive 8.3, "NRC Incident Investigation Program," and implemented using Inspection Procedure 93800, "Augmented Inspection Team." The inspection was conducted by a team of inspectors from the NRC's Region IV office and the senior resident inspector from the South Texas Project with remote assistance from one reactor systems engineer and one senior electrical engineer from the NRC Office of Nuclear Reactor Regulation (NRR). The team identified 13 issues that will require additional NRC inspection. These issues are tracked as unresolved items in this report.

- On January 30, 2012, an Augmented Inspection Team (AIT) was dispatched to Wolf Creek Generating Station to gather facts and understand the circumstances surrounding the January 13, 2012, loss of offsite power (LOOP). The LOOP was the result of two equipment failures: a) a fault on the main generator output breaker, and b) a differential relay trip of the startup transformer. The LOOP lasted almost 3 hours before offsite power was partially restored, although it took 4 days to restore power to most non-safety equipment. All safety systems performed their functions to support a safe shutdown and cooldown of the plant. However, there were five additional equipment malfunctions that complicated the event response:

    - The turbine-driven auxiliary feedwater (AFW) pump experienced an inadvertent overspeed trip mechanism actuation while the operators were shutting down the pump.
    - The B emergency diesel generator developed a ground on the field circuit but continued to function normally.
    - The essential service water system experienced a water hammer event and a 5 gpm leak inside containment.
    - One source range nuclear instrument gave inaccurate readings.
    - Operators experienced considerable difficulty and delays in getting the temporary diesel fire pump in service, so normal fire fighting water was not available for 9 hours.

    The team concluded that operators responded appropriately to the event, and safety system functions were maintained; however, equipment issues, some of which were known problems that had not been corrected before the event, complicated the response to this event. The AIT identified 13 unresolved items requiring follow-up inspection to determine the existence and significance of any associated performance deficiencies.

A. <u>NRC-Identified and Self-Revealing Findings</u>

No findings were identified.

B. Licensee-Identified Violations

None.

EXECUTIVE SUMMARY

On January 30, 2012, an Augmented Inspection Team (AIT) was dispatched to Wolf Creek Generating Station to gather facts and understand the circumstances surrounding the January 13, 2012, loss of offsite power (LOOP). The LOOP was the result of two equipment failures: a) a fault on the main generator output breaker, and b) a differential relay trip of the startup transformer. The LOOP lasted almost 3 hours before offsite power was partially restored. All safety systems performed their functions to support a safe shutdown and cooldown of the plant. However, there were five additional equipment malfunctions that complicated the event response:

1) The turbine-driven auxiliary feedwater (AFW) pump experienced an inadvertent overspeed trip mechanism actuation while the operators were shutting down the pump.
2) The B emergency diesel generator developed a ground on the field circuit but continued to function normally.
3) The essential service water system experienced a water hammer event and a 5 gpm leak inside containment.
4) One source range nuclear instrument gave inaccurate readings.
5) Operators experienced considerable difficulty and delays getting the temporary diesel fire pump in service because of equipment, training, and procedural problems.

The AIT identified 13 unresolved items requiring follow-up inspection to determine the existence and significance of any associated performance deficiencies:

1) Assess the cause determination for the main generator output breaker fault.
2) Assess the cause determination for the startup transformer fault.
3) Assess the maintenance deficiency associated with setting dimensions in the turbine mechanical trip linkage mechanism for the turbine-driven AFW pump.
4) Assess operating the turbine-driven AFW pump contrary to vendor recommendations.
5) Assess whether the B emergency diesel generator field ground would have impacted the ability of the generator to perform reliably through its design mission time.
6) Assess the adequacy and timeliness of licensee corrective actions to mitigate a long-standing history of water hammer events in the essential service water system.
7) Assess the adequacy of pipe wall-thickness examinations performed to assure the operability of the essential service water system.
8) Assess the adequacy and timeliness of corrective actions associated with source range nuclear instrument indication problems.
9) Assess the failure to maintain the fire system available for 9 hours.
10) Assess the adequacy of the installation and operating procedures of the temporary diesel-driven fire pump.
11) Assess the adequacy of the temporary fire pump design.
12) Assess whether the September 13, 2011, failure of the normal diesel fire pump was maintenance-related.
13) Assess the design of the power supply for some protected area perimeter assessment equipment.

1.0 Description of Event (Charter Item #1)

1.1 **Summary of the Sequence of Events**

Prior to the event, Wolf Creek Generation Station was operating at 100 percent power with no plant evolutions in progress, no transmission switching events occurring, and no severe weather conditions. All plant systems were lined up and performing as designed except reactor coolant system pressurizer power operated relief valve (PORV) PCV-455A, which was isolated by closing its block valve because of valve seat leakage. Figure-1 shows a simplified schematic of the Wolf Creek electrical distribution system. This figure, along with the Sequence of Events in Attachment 2 and systems descriptions below, will aid in understanding of the event.

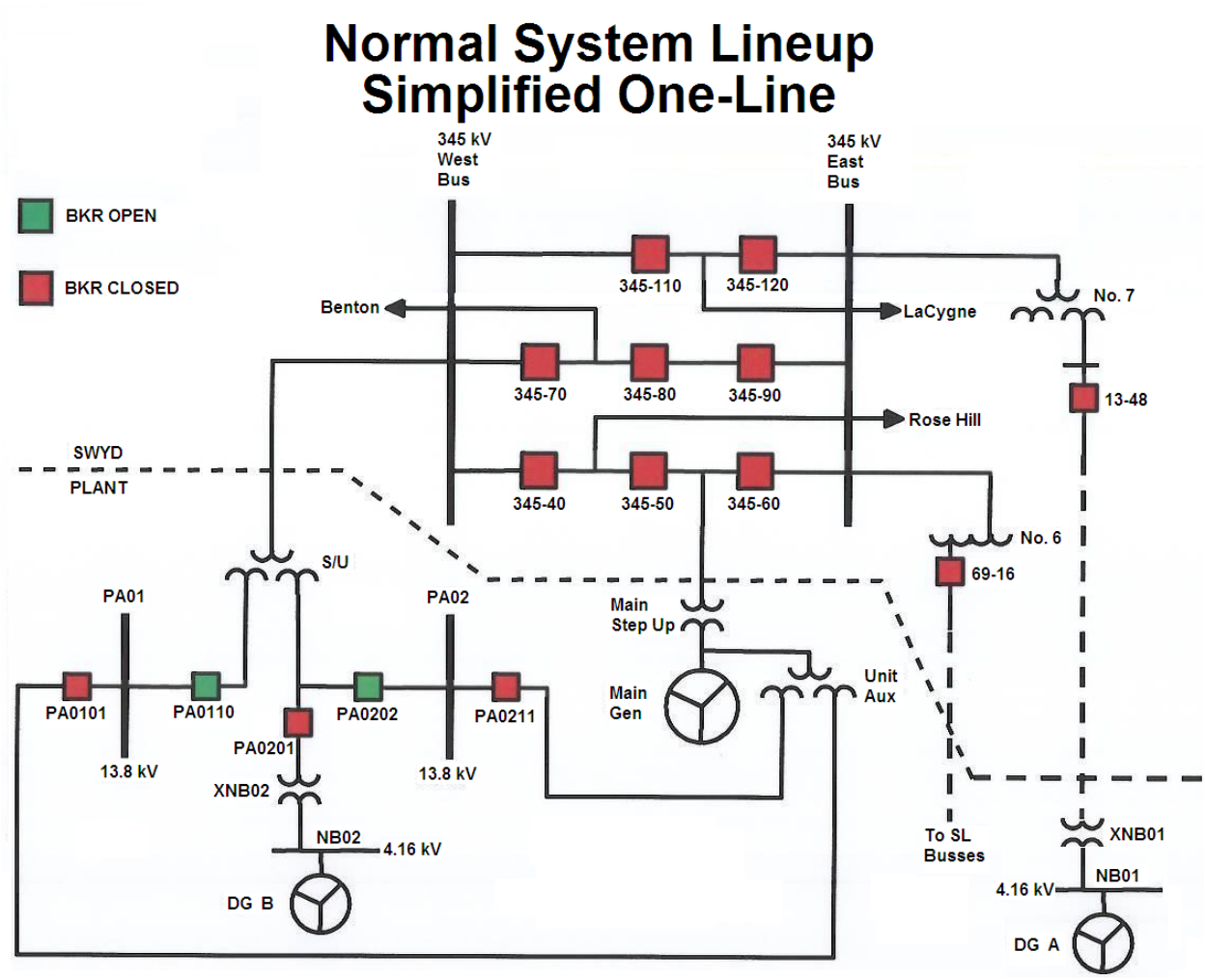

Figure-1, Wolf Creek Simplified Electrical Distribution

On January 13, 2012, at 2:02 p.m. CST, the site experienced a loss of offsite power (LOOP). The event resulted from two distinct faults. The first fault was on the C phase

of main generator output breaker 345-60. This fault resulted in the 345 kVac east bus differential relay protective logic to open breakers 345-120, 345-90, 345-60, 13-48, and 69-16, which together deenergized the east bus. As a result of the location of the fault on the C phase of the 345-60 breaker, the main generator differential relay protective logic opened breaker 345-50. This resulted in a main generator trip signal, and started the sequence of events to shift the source of power to most station loads from the unit auxiliary transformer to the startup transformer in a sequence called a fast bus transfer. The fast bus transfer resulted in breakers PA0211 and PA0101 opening, and breakers PA0202 and PA0110 closing. This completed the fast bus transfer and now had the station loads aligned through the startup transformer. The second fault, a phase differential, occurred on the B phase of the startup transformer and resulted in the 345 kVac west bus differential relay protective logic opening breakers 345-40, 345-70, and 345-110, deenergizing the remaining portions of the switchyard. It also resulted in the startup transformer phase differential relay protective logic opening breakers PA0110, PA0201, and PA0202. The sequence of events to this point all occurred in approximately 12 cycles (about 0.2 seconds) resulting in Wolf Creek experiencing a LOOP condition. The A and B emergency diesel generators automatically started and were powering the safety buses approximately 8 seconds after the start of the event. At 2:15 p.m., the shift manager declared a Notification of Unusual Event based on the expectation that the LOOP would last longer than 15 minutes. At 4:45 p.m., the 345 kVac east bus was reenergized from La Cygne by closing breaker 345-120, restoring offsite power to train A safety-related components. At 5:09 p.m., the Notification of Unusual Event was terminated.

The licensee safely cooled down the reactor coolant system; however, they encountered a number of challenges during the event.

- As a result of a previous failure, the normal diesel-driven fire pump was not available and a temporary diesel-driven fire pump was used in its place. The temporary diesel-driven fire pump did not have an automatic start feature, and was drained to prevent freezing. Operators had difficulty in priming it; consequently, the station was initially without a working fire water supply for approximately 9 hours. Over the next couple of days, the licensee struggled to keep the temporary diesel-driven fire pump operating and lost all fire water pressure multiple times. Additionally, the licensee did not promptly implement compensatory measures for the loss-of-fire water.

- The loss of power resulted in the loss of instrument air pressure, which resulted in the reactor coolant letdown system isolating and the reactor coolant charging system flow increasing to maximum. This combination of events (expected for the plant conditions) increased reactor coolant system pressure (due to compressing the steam bubble in the pressurizer) and resulted in the reactor coolant system pressurizer power-operated relief valve (PORV) PCV-456A cycling open and closed 23 times until the instrument air compressors could be restarted and letdown restored.

- Two hours and 43 minutes into the event, a senior reactor operator reviewing post trip review trends identified a possible water leak inside containment. It was later determined that the water leak was about 5 gpm from the essential service water system piping at the C reactor containment air cooler.

- The count rate on source range nuclear instrument NI-31 began to increase when post-trip reactor power was decreasing as expected on NI-32 (this occurred with all rods inserted and the reactor shutdown). The licensee had previous experience that showed that, as reactor cavity temperature increased upon a loss of reactor cavity cooling (in this case as a result of the LOOP), the count rate on NI-31 would increase. This resulted in having only one reliable source range nuclear instrument remaining operable until reactor cavity temperatures decreased during the plant cooldown, which took about 7 hours. However, the licensee can monitor and credit the Gamma Metrics detectors in addition to the source range nuclear instruments and was able to comply with technical specifications under these conditions.

- Temporary modifications were performed to restore power to chemistry and health physics equipment to support reactor coolant chemistry sampling. Additional temporary modifications were performed to power other nonvital loads, such as auxiliary building sump pumps. These modifications were not required to safely shutdown the plant.

- The licensee performed an emergency hydrogen purge of the main generator to prevent dangerous hydrogen leakage because the battery powering the seal oil pumps was being depleted; and later they had a tractor trailer of CO_2 delivered to purge the hydrogen from the main generator, since the installed CO_2 system had not been functional since 2008. Calling for the CO_2 delivery was proceduralized.

- The turbine-driven auxiliary feedwater pump (AFW) pump experienced an inadvertent actuation of the overspeed trip mechanism while the operators were shutting it down after it had operated continuously for 12.5 hours.

- The B emergency diesel generator developed a generator field ground alarm; the generator had been operating for 22.5 hours when the alarm came in and continued to operate normally for another 18 hours until it was no longer needed.

The reactor coolant system was cooled down using natural circulation until residual heat removal could be placed in service; the plant was safely stabilized in cold shutdown conditions at 7:50 a.m. on January 14. The licensee restored power to most of the plant systems on January 17, by back-feeding through the main and auxiliary transformers after performing extensive inspections to verify that the nonvital switchboards were safe to energize. There were no radiological releases due to this event.

A more detailed sequence of events can be found in Attachment 2.

1.2 Probable Cause

a. Inspection Scope

The team conducted an independent review of the licensee's actions taken to understand the probable cause of the LOOP. This included reviewing the licensee's determination that two distinct events occurred; the first on the C phase of the main generator output breaker 345-60 and the second on the B phase of the startup transformer.

The team reviewed the safety analysis, technical specifications, vendor manuals, design basis documents, system health reports, the post-trip report, the failure mode report for the main generator breaker, control room logs, operator statements, troubleshooting plans, and interviewed personnel. The review included understanding the licensee's criteria for determining the root cause, or if one could not be determined, the most probable cause. Specific documents reviewed are listed in Attachment 1.

b. Observations

The team identified two unresolved items (URIs) requiring follow-up inspection. One URI involved reviewing the root cause analysis of the main generator output breaker fault when it is completed, and the second URI involved reviewing the root cause analysis of the startup transformer fault when it is completed.

At the time that the team left the site, the licensee had not determined the root cause of the main generator output breaker 345-60 fault. It was unclear if the root cause could be determined based on the damage that was identified internal to the breaker. Therefore, the inspectors focused on the licensee's determination of the most probable cause and the method that the licensee used to reach that conclusion. The licensee and Westar (the company that operates the switchyard at Wolf Creek) representatives cooperated with the breaker manufacturer, HVB, to conduct a failure analysis at the HVB plant. In addition, Westar contracted the National Electric Energy Testing Research and Applications Center to provide an independent failure analysis. Based on the resulting failure analysis, the licensee made a preliminary determination that the failure of the 345-60 breaker was most likely due to internal particulate contamination introduced during manufacturing, but they were still waiting for an independent review of the failure mode data and for isotopic analysis of residue from inside the breaker to finalize that conclusion. The NRC will review the final cause assessment for the 345-60 breaker fault, which will be tracked as URI 05000482/2012008-01, Review Main Generator Output Breaker Fault Cause.

When the team left the station, the licensee was still performing troubleshooting activities on the startup transformer to determine the cause of the B phase fault. The licensee tested current transformer (CT) ratios, polarity, and saturation and CT megger tests of the high voltage section were performed on each individual CT. No anomalies were found and troubleshooting and evaluation did not reveal any damage or cause for the fault. The licensee contracted TransGrid Solutions to develop a computer model to

further analyze the fault and test failure mode theories related to inrush current and harmonics. The licensee put the startup transformer back into service on February 3, 2012, after concluding that it was safe to restore in order to support further testing.

On February 13, 2012, the licensee experienced another fault on the B phase of the startup transformer while attempting to start the A reactor coolant pump. Testing equipment had been installed to monitor the performance of the transformer, and data obtained during the February 13 fault was reviewed. The licensee reevaluated the previous troubleshooting plan to determine additional testing that needed to be performed to determine the cause of the B phase fault. Subsequent troubleshooting identified a short between two unused taps of the high side CTs caused by missing insulation sleeves on wires in the transformer that likely caused the false actuation of the transformer's protective relay both times. These wires were associated with providing electrical current indication to the differential current trip circuit. The licensee corrected this condition by restoring the insulation and tested the restored connections by starting all reactor coolant pumps successfully. The NRC will review the final cause assessment for the 345-60 breaker fault, which will be tracked as URI 05000482/2012008-02, Review Startup Transformer Fault Cause.

2.0 Evaluate Licensee Actions (Charter Item #2)

a. Inspection Scope

The team conducted an independent review of licensee actions taken in response to the event to determine if licensee staff responded properly during the event. The following areas were specifically addressed:

- Assess licensee actions taken in response to the event. This activity focused on immediate control room staff actions to stabilize the plant in hot standby using Emergency Operating Procedures (EOPs).
- Assess control room staff's actions to cool the plant down to cold shutdown.
- Assess other operator actions.
- Assess event classification and reporting.

The inspectors conducted interviews with on-shift personnel and reviewed the post-trip report, which included control room logs, operator statements, and plant data trends to assess overall performance of the crew. With respect to operator awareness and decision-making, the team focused on the effectiveness of control board monitoring, training for EOP implementation, technical decision-making, and the work practices of the operating crew. With respect to command and control, the team focused on actions taken by the control room supervision in managing the operating crew's response to the event.

b. Observations

The team concluded that EOPs were implemented in a manner that was consistent with training. The team determined that operators exhibited fundamental operator competencies when responding to the event while using EOPs. Specifically, the team determined that the operating crew promptly identified the reactor trip and LOOP, and identified important off-normal parameters and alarms in a timely manner. The crew appropriately identified and addressed abnormal equipment alignments associated with non-safety-related equipment that could challenge personnel safety. Additionally, the team determined that operating crew supervision exercised adequate oversight of plant status, crew performance, and site resources.

The team reviewed the post-trip report performed by the licensee in which the licensee identified that a small steam void may have been present in the upper head area of the reactor vessel. This indication was observed on plant computer charts for pressurizer level late in the cooldown (just prior to transitioning to shutdown cooling). The steam void was collapsed prior to transitioning to shutdown cooling. A steam void can form in the reactor vessel head during natural circulation cooldown because natural circulation provides very little flow near the reactor head region; the residual heat in the thick metal vessel head can cause the stagnant reactor coolant in that area to reach saturation conditions and create some steam voiding. The background documentation for the natural circulation cooldown procedure indicated that a steam void in the upper region of the reactor vessel head "does not represent a challenge to plant safety." The inspectors reviewed the plant computer charts for hot leg and cold leg temperatures (indications of natural circulation), the natural circulation cooldown procedure, and the background documentation for the emergency procedures to assess whether the control room operators appropriately monitored and controlled the plant during the cooldown. The inspectors concluded that the operators appropriately implemented the natural circulation cooldown procedure EMG ES-04.

The team determined that overall, the operating crew performed adequately to stabilize the plant, minimize potential dangers due to the prolonged LOOP, established critical parameter limits for systems required for safe shutdown, and safely conducted a natural circulation cooldown. Once offsite power was restored, the crew safely completed a transition to shutdown cooling and maintained the plant in a cold shutdown condition.

The team also reviewed the control room's event classification and reporting and determined that the operating crew was both timely and accurate in their reporting of the Notification of Unusual Event to local, state, and federal entities.

3.0 Assess Procedures (Charter Item #3)

a. Inspection Scope

The team reviewed the plant operating and emergency response procedures used to respond to the event. The review focused on the adequacy of procedural guidance and whether operator training supported use and knowledge base of the emergency operating procedures. The team performed operator interviews and a review of the procedures operators marked up during the event, written operator statements, and the

post-trip review to assess the procedures.

b. Observations

The team determined that overall, licensee procedure use and adherence was adequate to respond to the event. The licensee entered the correct emergency response procedure and made the required transitions to subsequent emergency procedures and functional restoration guidelines. The team determined that the procedure guidance during the event was adequate to place the plant in a safe and stable condition. The team identified procedure issues associated with the temporary diesel fire pump which are discussed in Section 9 of this report.

4.0 Plant Response (Charter Item #4)

a. Inspection Scope

The team assessed whether plant systems responded as expected by comparing the actual plant response to its design and the applicable safety analyses.

The team reviewed the final safety analysis report (FSAR) Chapter 15, “Accident Analysis,” section 15.2.6, “Loss of Non-Emergency AC Power to the Station Auxiliaries (Blackout)”. The team reviewed the assumptions in the accident analysis and compared these assumptions to the actual plant response to determine if an unanalyzed condition existed. The team reviewed the initial plant conditions and compared them to the worst-case plant conditions assumed in the accident analysis to determine if the accident analysis remained valid to bound the event.

b. Observations

The team determined that the plant responded as designed, that all assumptions in the accident analysis appropriately bounded the event, and that no unanalyzed condition was identified for this event. The team verified that all equipment assumed to operate in the LOOP accident analysis started and/or operated as expected to mitigate the event.

The team identified other equipment issues that are discussed in later sections of this report, but these issues did not invalidate the accident analysis. Overall, the team determined that the plant responded within the bounds of the accident analysis and that the core was not adversely affected.

5.0 Turbine-Driven Auxiliary Feedwater Pump (Charter Item #5)

a. Inspection Scope

The team reviewed the licensee's efforts to determine the cause of an unexpected mechanical overspeed trip alarm that occurred while securing the pump. The team also assessed whether the licensee had operated the turbine-driven AFW pump in accordance with station procedures and the vendor recommendations.

b. Observations

The team identified two URIs requiring follow-up inspection. One URI involved an apparent maintenance deficiency associated with setting the proper tolerances in the turbine mechanical trip linkage mechanism. The second URI involved the licensee's failure to follow vendor recommendations for operating the turbine-driven AFW pump.

Approximately 12.5 hours after the onset of the event, when steam pressure lowered to approximately 60 psi, the operator secured the turbine-driven pump by closing the trip and throttle valve (HIS-312A). At the instant the operator pushed the button on the control board to close the trip and throttle valve, the alarm light indicating a mechanical overspeed trip lit up. This was an unexpected response. Using indications on the control board, the operator was able to verify that an actual overspeed event had not occurred.

An operator responded to the turbine room and verified that the mechanical overspeed linkage had tripped. The operator was able to reset the turbine. This meant that the pump could have been quickly re-started if needed, although the need for this would have been unlikely as the plant was placed on shutdown cooling shortly afterwards.

The licensee determined that the cause of the mechanical overspeed trip was inadequate engagement of the trip tappet nut and head lever. This overlap engagement length was required by procedure to be set between 0.03 and 0.06 inches. After the event, this dimension was determined to be only 0.018 inches. It is likely that the vibration induced by closing the trip and throttle valve caused the tappet nut to disengage with the head lever, thereby allowing the lever to pivot and trip the turbine. It is unlikely that the trip would have occurred if the engagement had been properly set.

The team noted that a similar event occurred at Wolf Creek on November 17, 2009, when the pump mechanical overspeed trip actuated at the time the trip and throttle valve was closed. In response, the licensee had visually checked the engagement of the tappet nut to head lever, noting that it appeared to be within specification. However, visual checks of the engagement length are not precise in determining such a short dimension. The licensee informed the team that it will use more accurate methods in the future.

Based on informal communications, the licensee identified that at least five similar events occurred at other nuclear power plants. In each of these cases, the trip also

occurred while closing the trip and throttle valve. The licensee stated that they were unaware of any formal operating experience that would have caused them to revise their maintenance procedures concerning the overspeed mechanism.

The team considered the possibility that a spurious trip of the mechanical overspeed device could have occurred while the pump was running in a steady-state condition. Had this occurred during the first few hours of the event, it would have added significantly to the risk. However, the vibration induced by closing the trip and throttle valve is far greater than what is experienced during normal operation. Given this fact and the operating history of other similar turbines, the team concluded that it would have been unlikely that the as-found under-specification condition would have interrupted normal pump operation.

The team also considered the possibility that a seismic event could have caused an inadvertent trip of the turbine due to this existing problem, since seismic events can also cause a LOOP. In that situation, if the emergency diesel generators both fail to operate and AC power cannot be restored quickly, operators would need to reset and re-start the turbine within an hour to prevent core damage. The licensee demonstrated that this could quickly be done.

The team concluded that it was likely that the tappet nut to head lever engagement length was below specification for an extended period of time. The engagement length was checked only during refueling outages; the most recent check was in spring 2011. However, because the measurement methods used at that time were imprecise, it was likely that the under-engagement condition existed at that time as well. The overspeed trip event in November 2009 suggested that the engagement length at that time might also have been less than specified. The team noted that a test of the overspeed trip was conducted on May 23, 2011, with satisfactory results.

In response to this event, the licensee decided to replace the trip tappet nut, trip lever, and trip linkage spring as well as to inspect all wear points on the trip linkage for damage or wear. The licensee stated that the engagement of the tappet nut to the head lever would be restored to the required specification before plant start-up.

Considering the fact that the turbine-driven AFW pump ran successfully for 12.5 hours and that the mechanical overspeed trip occurred only as a consequence of securing the turbine, the contribution to the overall risk of the LOOP event was considered to be very low. On the other hand, as discussed above, it was not immediately certain if there was an on-going risk associated with seismic events.

The team determined that the out-of-specification tappet nut to head lever engagement of the turbine-driven AFW pump mechanical overspeed trip mechanism warranted additional NRC review and follow-up considering that this maintenance deficiency led directly to the spurious overspeed trip following the LOOP event and additionally might have affected the reliability of the turbine during a seismic event. Additional review by the NRC will be needed to determine whether this issue represents a performance deficiency. The issue will be identified as URI 05000482/2012008-03, Review Turbine-

Driven Auxiliary Feedwater Pump Mechanical Overspeed Trip Device Out of Specification.

The team identified a separate concern with the way the turbine-driven AFW pump was operated during the event in that it was run at low steam supply pressures and at a low speed. At the time the pump was secured, the steam pressure was approximately 60 psig. The Terry Turbine Users Manual specified operating the pump with a minimum steam supply pressure of 77 psig. The team determined that this vendor guidance, as well as previous operating experience on this issue, was not successfully incorporated into licensee procedures and training. Previous testing of a similar turbine-driven pump demonstrated that high axial loading occurred on the pump outboard thrust bearing when turbine speed was in the range of 1600 to 1900 rpm. During the Wolf Creek event, the turbine was operated in this range for approximately one hour.

Also, there was a precaution for running the turbine-driven pump at low flows in Procedure SYS AL120, "Motor-Driven or Turbine-Driven Pump Operations," Revision 41, which was dated December 19, 2011, and in effect at the time of the event. It stated:

> Operations of the TDAFWP at flow rates less than 175,000 lbm/hr. should be minimized, due to low flow cavitation concerns.

This precaution was not observed during the event. The flow rate cycled above and below this value over almost the entire 12.5 hours of pump operation. Cumulatively, the pump ran for approximately 5 hours at a flow rate below 175,000 lbm/hr. The licensee informed the team that it will review the vendor recommendations for turbine operations to determine if changes are needed to procedures or training.

After the event, the licensee removed and inspected the pump outboard thrust bearing. Although they found no signs of damage, the licensee conservatively replaced the bearing. The team also examined the bearing and observed no signs of damage or wear.

The team determined that the operation of the turbine-driven AFW pump in a manner contrary to vendor recommendations and site procedures warranted additional NRC review and follow-up. Additional review by the NRC will be needed to determine whether this issue represents a performance deficiency. The issue will be identified as URI 05000482/2012008-04, Review Operation of the Turbine-Driven Auxiliary Feedwater Pump at Low Flow, Steam Pressures, and Speed.

6.0 Emergency Diesel Generator B Ground (Charter Item #6)

a. Inspection Scope

The team reviewed licensee efforts to determine the cause of the field ground on the B emergency diesel generator, and to determine whether the ground would have impacted the ability of the generator to perform reliably through its design mission time.

The team reviewed the equipment testing, calibration, and troubleshooting procedures used to determine if there was a ground on the generator field or if there was an instrumentation error. The team:

- Reviewed condition reports, work orders, and the licensee's troubleshooting plan generated during the testing of the generator
- Reviewed the licensee's application of operating experience that was related to generator field grounds, including consultation with Fairbanks-Morse, the vendor of the generator
- Interviewed licensee engineering staff to discuss the troubleshooting plan and the schedule to perform the troubleshooting
- Evaluated whether the field ground would impact the ability of the generator to perform reliably through its design mission time

b. Observations

The team identified one URI requiring follow-up inspection. The URI involves determining whether the generator field ground would have impacted the ability of the generator to perform reliably through its design mission time.

The B emergency diesel generator started as required at 2:03 p.m. on January 13, 2012, in response to the LOOP event. At 12:36 p.m. on January 14, while the generator continued to operate, a generator trouble alarm was received in the control room. The local operator reported that a Generator Field Ground annunciator was lit on the local control panel. No change in generator current, voltage or frequency was observed after the alarm was received. The generator had been operating for 22.5 hours when the alarm came in and continued to operate normally for another 18 hours until it was no longer needed. Prior to securing the generator, voltage measurements were taken on the relay input terminals which confirmed that a field ground existed.

Using a process of elimination, the licensee isolated the ground to one of four cables between the collector rings on the rotor and the poles inside the generator. When the bad cable was disconnected, the ground went away. The licensee planned to replace all four cables on the generator.

A URI will be opened to evaluate the cause and corrective actions for the ground as well as whether the generator field ground would have impacted the ability of the generator to perform reliably through its design mission time. This issue will be identified as URI 05000482/2012008-005, Assess Impact of Emergency Diesel Generator Ground on Mission Time.

7.0 Essential Service Water System Water Hammer and Leak (Charter Item #7)

a. Inspection Scope

The team reviewed the licensee's past and proposed future actions to address the recurrent water hammer events that have challenged the essential service water (ESW) system, and the scope and results of the licensee's non-destructive examination of ESW piping to identify areas of pipe thinning or pitting corrosion. The team also examined the leak in ESW piping that was found during a post-trip walkdown.

b. Observations

The team identified two URIs requiring follow-up inspection. One URI involved reviewing the adequacy of licensee corrective actions to mitigate a long-standing history of water hammer events in the ESW system. The second URI involved reviewing the extent of pipe wall-thickness examinations performed to ensure the operability of the ESW system.

Soon after offsite power was lost, the licensee identified a 5 gpm leak in the ESW system 8-inch piping to the train C containment cooler. The source of the leak was discovered during a post-trip containment walkdown and was isolated approximately 3 hours and 45 minutes after the LOOP occurred. The leak resulted in a total inventory loss of approximately 900 gallons, most of which drained to the containment sump. The ESW design specification for allowable leakage is 140 gpm; therefore, the leak was not large enough to challenge ESW system operability.

The ESW system is an open loop system and uses the ultimate heat sink (i.e., the lake) as its source of inventory. After the leak was isolated, the Train C containment cooler was declared inoperable. A follow-up inspection revealed no additional leaks in the ESW piping.

The licensee assumed that a water hammer event occurred and that it was the direct cause for the leak, such that the resulting pressure pulse failed an area of pipe weakened by pitting corrosion. The presence of staining on the exterior of the pipe at the location of the hole indicated that a small leak was likely present prior to the event, and the water hammer presumably caused the leak rate to increase. The staining was under insulation and therefore not readily apparent.

The water hammer resulted from water column separation in the high elevation portions of the ESW piping supply to the containment coolers. This occurred after the normal service water pumps stopped as a result of a loss of power to the non-safety buses. The two ESW pumps started at approximately 29 and 33 seconds after the LOOP. Once the ESW pumps started, the water columns quickly came back together causing a large pressure spike.

Water hammer events in the ESW system have occurred since initial plant start-up, but they did not receive significant attention from the licensee until April 2008, when the issue was raised by the NRC resident inspectors.

The licensee stated that an evaluation will be performed to identify modifications to mitigate the occurrences and magnitude of water hammer events in the ESW system. This strategy might include the use of check valves, surge tanks, or vacuum breakers. The licensee stated that these modifications would most likely be installed during refueling outage RF20 in the spring of 2014. Because water hammer events have been a long-standing problem in the ESW system, the team was concerned that the actions to correct this problem have not been timely.

The team determined that the licensee's efforts to correct a water hammer problem in the ESW system warranted additional NRC review and follow-up because this phenomenon has repetitively challenged the integrity of a risk-significant safety-related system. Additional review by the NRC is needed to determine whether this issue represents a performance deficiency. This issue will be identified as URI 05000482/2012008-06, Review Actions to Correct Water Hammer Events in the ESW System.

The team reviewed licensee's efforts to identify areas of pitting corrosion in the ESW piping. Based on previous leaks and acknowledgement of the corrosion potential of this piping, the licensee had performed inspections of various sections of piping. The inspection methods included guided wave and phased array or single transducer ultrasonic testing (UT).

The areas of piping not previously inspected by the licensee were reviewed by the team. Some of the ESW piping leading up to and connecting to the containment coolers had not been inspected based on engineering judgment that these sections of piping were not especially vulnerable to pitting corrosion. Any piping that was provided by a vendor (e.g., was skid-mounted) had been considered by the licensee to be outside the scope of their inspection. The section of piping that failed was in a vendor-supplied 8-inch line associated with the train C containment cooler which had not been previously inspected. Also not inspected were some areas of piping that were inaccessible for UT measurement, including containment penetrations, piping under support clamps, areas obstructed by permanently-installed plant equipment, and valve bodies.

The ESW system piping had experienced an increasing number of leaks in recent years. The following is an excerpt from the executive summary in IIT 10-01, "Investigation Into the Material Condition of ESW Piping and Events From CR 00026466 and CR 00028474," issued in November 2010:

> Wolf Creek Generating Station has experienced five ESW system through-wall pipe leaks since June 2009. The first four leaks were on exposed pipe and accessible for repair. The fifth leak in October 2010 was in underground ESW pipe and considerably less manageable to repair. The station has experienced a significant recent increase in the number of ESW through-wall pipe leaks. In

addition to pipe leakage, the ESW system is subject to column closure water hammer events during ESFAS actuations. The effects of repeat water hammer events, combined with through-wall pipe leaks, have not been fully evaluated.

The team determined that previous efforts were not sufficient to detect corrosion problems before they developed into leaks and that water hammer events made leaks more likely. The team determined that the licensee's failure to examine the condition of vendor-supplied piping associated with the containment coolers as well as other areas of ESW piping warranted additional NRC review and follow-up. Additional review by the NRC will be needed to determine whether the licensee's limited scope of piping inspection represents a performance deficiency. This issue will be identified as URI 05000482/2012008-07, Review ESW Piping Corrosion Inspections.

In response to this event, the licensee conducted additional inspections of the ESW piping, including the vendor-supplied piping connected to the containment coolers. Based on the results, sections of piping associated with the train A and train B containment coolers were replaced as well as the section that contained the leak in the train C piping.

The licensee informed the team that all accessible ESW piping inside containment and all ESW piping outside containment that was 6" or larger had been or will be inspected prior to plant start-up. Some areas of piping outside containment under 6" will not be inspected before plant startup, though some of this piping is scheduled to be inspected either during the spring of 2012 or in refueling outage RF19 in the fall of 2012. The total length of small-bore ESW piping that will remain uninspected is approximately 1700 feet. The licensee explained that small bore piping was less likely to suffer pitting corrosion, the consequences of leaks of this size are less severe, and leaks in this piping are more easily isolated. The licensee stated that piping with stagnant water or low flow velocities was more likely to have pitting corrosion, and that much of the piping that will not be inspected prior to plant startup had high flow rates. Additionally, some piping was not inspected because of its location in high radiation areas; though in these cases, pipe runs leading up to these rooms were inspected and shown to be relatively corrosion free, giving some confidence that the piping within the radiation areas were similarly in good condition.

The licensee used a calculation of the maximum pressure induced by postulated water hammers to determine the minimum acceptable wall thickness for its ultrasonic testing program. An assumed corrosion rate of 0.05 inches per year is then applied and this information is used to determine the time until a leak is expected for a given problem area. These areas are then scheduled to be inspected again before the leak is projected to occur.

None of the buried piping had been or will be inspected by ultrasonic or guided wave inspections before plant start-up, but all of it was scheduled to be replaced during refueling outage RF20 in the spring of 2014. In the interim, the licensee is monitoring the underground piping by visual over-ground inspections as well as by use of ground penetrating radar. In October 2010, a 40-50 gpm leak developed in the underground

piping. The licensee stated that the ground penetrating radar was able to detect the leak, giving confidence in the effectiveness of this diagnostic tool.

8.0 Source Range Nuclear Instrument Deviation (Charter Item #8)

a. Inspection Scope

The team assessed the impact of the deviation between the two source range nuclear instrument channels on operator decision-making, and the ability to verify that adequate shutdown margin existed. The team also assessed the timeliness of the licensee's cause assessment and corrective action for this condition, which has existed since 2009.

The team reviewed the plant computer charts for the source range nuclear instruments, various engineering evaluations, technical specifications and bases, and interviewed subject matter experts in engineering and maintenance. The team also verified that shutdown margin calculations were performed and reported to the control room staff prior to commencing a natural circulation cooldown. Additionally, the team reviewed corrective actions and testing performed following the 2009 LOOP event and 2011 loss of cavity cooling events. The team discussed the testing and actions planned to address the detector deviation prior to reactor startup.

b. Observations

The team identified one URI associated with the source range nuclear instrument NI-31 diverging indication during the LOOP event and resultant loss of reactor cavity cooling. The URI will determine whether corrective actions, commensurate with its safety significance, have been appropriate and timely since identifying the issue during the 2009 LOOP event.

In August 2009, the Wolf Creek facility experienced a LOOP as a result of a lightning strike on the electrical distribution system. The LOOP resulted in the loss of reactor cavity cooling fans that circulate cool air to the source range nuclear instrument detectors and cables. As temperatures increased around the detectors, NI-31 counts began to increase, while NI-32 continued to trend downward as expected. The licensee was able to restore cavity cooling after offsite power was restored and NI-31 counts began to lower and returned to proper indication.

Following the 2009 LOOP event, the licensee replaced both source range detectors and cables during refueling outage RF17 in October 2009. In March 2011, another loss of reactor cavity cooling occurred and NI-31 counts again began to increase, while NI-32 remained unchanged. Once cavity cooling was restored the counts associated with NI-31 returned to expected indications, consistent with NI-32. For both the 2009 and 2011 events, loss of reactor cavity cooling caused NI-31 counts to increase, and restoration of normal reactor cavity cooling caused counts to return to expected indicated levels. The licensee concluded that the increasing counts are linked to ambient temperature rise at NI-31 that occurs when reactor cavity cooling is lost.

The licensee performed engineering evaluations SWO 11-341977 and WO 11-339015-004 to document the events and the justification for operation until the cause of the elevated ambient temperature at NI-31 can be identified and corrected. During the January 13, 2012, LOOP event and subsequent loss of cavity cooling, NI-31 counts began to increase as in the previous events. The crew recognized the increasing counts and declared the detector inoperable. Technical Requirements Manual bases document B3.3.15, "Source Range Neutron Flux," allows for use of the Gamma Metrics detectors to provide source range indication when rods are not capable of withdrawal. The operating crew confirmed the Gamma Metrics detectors were indicating properly, and relied upon them in place of the source range detectors.

The licensee performed another engineering evaluation to document the increasing counts following the recent LOOP event, and to document that "SENI0031 should continue to be considered degraded because of its abnormal response to loss of cavity cooling which SENI0032 does not experience." The licensee was tracking this condition using condition reports 35122 and 47652.

The team assessed the impact of the diverging source range detector on the operating crew's decision-making and determined that the crew recognized the trend as erroneous based on previously documented occurrences. The crew then relied upon NI-32 and the Gamma Metrics detectors to verify proper shutdown conditions. The inspectors assessed the impact on the licensee's ability to verify adequate shutdown margin and determined that the source range detectors are not used as an input into the shutdown margin calculation. The team verified that the crew obtained a shutdown margin calculation supporting cooldown to 150 degrees F prior to commencing the natural circulation cooldown.

A limited area visual inspection was performed prior to the team leaving site, but did not reveal any obvious causes for elevated temperatures. Further investigation by the licensee was ongoing at the conclusion of the inspection.

Prior to plant startup following the LOOP event, the licensee planned to perform: (1) cavity cooling ventilation flow and temperature measurements, (2) detector well ventilation leak checks on both source range detectors and perform visual inspection of the detector well inlet scoop, (3) heat the detector junction box to assess whether the cable heating was the cause, and (4) as a planned contingency, install temperature monitors to the detector well.

The team questioned whether the corrective actions taken during the prolonged time from the initial occurrence in 2009 until the current LOOP event in January 2012 were adequate and timely, commensurate with its safety significance. This issue will be identified as URI 05000482/2012008-08, Review Source Range Detector Deviation.

9.0 Temporary Fire Pump (Charter Item #9)

a. Inspection Scope

The team evaluated: (1) the cause of the failure of the normal diesel-driven fire pump; (2) the adequacy of the temporary modification to be able to meet the design and licensing basis requirements for the system; (3) the adequacy of the actual installation and operating procedures, including suction source, weather protection, minimum flow design, and the ability to maintain system pressure during a prolonged loss of power; and (4) the sequence of events that led to subsequent temporary pump failure when the motor-driven fire pump was returned to service. The team reviewed drawings, condition reports, work orders, operating experience, testing procedures, oil samples, modification packages, operating procedures, and logs and also conducted walkdowns and operator interviews.

b. Observations

The team identified three URI's associated with: (1) failure to maintain fire water pressure for 9 hours, (2) the adequacy of the actual installation and operating procedures of the temporary diesel-driven fire pump, and (3) the adequacy of the temporary modifications to be able to meet design and licensing requirements. In addition, the team identified one URI associated with the initial cause of the 2011 failure of the installed diesel-driven fire pump, which is discussed in detail in Section 10 of this report.

System Description

The Wolf Creek water-supplied fire protection system takes its suction from the Wolf Creek cooling lake and includes an electric motor-driven jockey pump, an electric motor-driven fire pump and a diesel-driven fire pump. The pumps and their controls are located in the circulating water screen house by the lake.

The design of the water-supplied fire protection system is such that normal header pressure is maintained by the jockey pump from the service water system. The primary purpose of the jockey pump is to compensate for small leaks and demands on the fire header system without having to start the much larger motor-driven fire pump, which is sized to supply all fire water for the plant. The electric motor-driven fire pump will automatically start on a drop in header pressure below 115 psi, which is below the start pressure for the jockey pump. The installed diesel-driven fire pump will auto start on a drop in header pressure below 105 psi and is designed to automatically start utilizing batteries in response to a LOOP.

The water-supplied fire protection system is a non-safety-related system and is supplied power from the non-safety-related busses PA001 and PA002. When the January 13, 2012, LOOP event occurred, power was lost to both the jockey pump and the motor-driven fire pump. The design of the system is such that the installed diesel-driven fire pump would have started in response to the LOOP, except that it had been out of service since September 13, 2011, when it had catastrophically failed during its monthly functionality test. As a compensatory measure for the out-of-service diesel-driven fire pump, a temporary diesel-driven fire pump had been installed in accordance with the

plant fire protection impairment program, AP 10-103, Section C.1.3.C.2.

The temporary diesel fire pump was a packaged trailer-mounted unit that took a direct suction from the cooling lake. The temporary diesel fire pump was manually operated with no auto-start capability. The packaged system was provided with manually operated priming pumps mounted on the trailer for priming the main pump. The diesel engine can be started once the main pump is primed, then distribution valves and minimum flow line valve have to be aligned. The unit was provided with an inline check valve, a fitting for external priming, and a minimum flow line. At the time of the LOOP the pump suction, pump case, minimum flow line, discharge manifold, and pump discharge lines had been drained to prevent freezing. Without power to the motor-driven fire pumps (because of the LOOP), and with the temporary diesel fire pump drained, Wolf Creek was left without fire protection water pressure until an operator was available and the temporary diesel-driven fire pump could be manually primed, started, and aligned to the fire main header. On the day of the LOOP, because of complications described below, it took 9 hours to get the temporary diesel-driven fire pump in service and supplying pressure to the fire header.

Sequence of Events

At 3:00 p.m., about 1 hour into the LOOP on January 13, 2012, the plant fire protection supervisor informed the control room that the station did not have fire suppression water pressure. In accordance with the fire protection impairment program, AP 10-103, Attachment C.1.3.1.E.1, with two fire pumps inoperable, the required action is to provide a backup fire pump within 24 hours. Operators were directed to put the temporary diesel-driven fire pump into service using procedure SYS FP-290 “Temporary Fire Pump Operations,” Revision 12. Operators made numerous attempts to prime the temporary diesel-driven fire pump, but they were initially unsuccessful in priming the pump, in part, because they did not shut the drain valves on the suction manifold. Procedure SYS FP-290 did not have adequate instructions and the pump skid did not have adequate labeling to support closing pump suction manifold drain valves. In addition, Figure 1 of this procedure, which was supposed to represent the installation, did not show any of the drain valves or the installed check valve that were part of the system. In interviews with licensee staff it was determined that operators were given on-the-job training on operation of the temporary diesel-driven fire pump in the fall of 2011, but no lesson plan was used and some operators had only one attempt with starting the equipment.

Operators eventually located and closed the suction manifold drain valve that was open and were successful in priming the temporary diesel-driven fire pump; however, because of the inadequate procedure, training, and equipment labeling, and other equipment issues, operators did not get the temporary diesel-driven fire pump primed, started, and supplying fire header pressure until 11:00 p.m., which left Wolf Creek without fire suppression water pressure for 9 hours.

Summary of Issues

There were several factors that delayed the successful operation of the temporary

diesel-driven fire pump on the day of the LOOP. They are listed as follows:

- The control room did not give starting the pump a high priority.
- The installation and location of the pump was such that it was not protected from freezing and had to be kept drained. It also had to be primed and started manually.
- The procedures to put the pump in operation were not adequate.
- The labeling of equipment that required alignment on the temporary fire pump was not adequate.
- The priming equipment failed due to prolonged operation.
- The training for operators was inadequate.
- The lighting conditions were poor.

The combination of these events resulted in the temporary pump not being placed into service for 9 hours. A URI will be opened for the failure to maintain fire water pressure for the first 9 hours of this event. This issue will be identified as URI 05000482/2012008-09, Review Failure to Maintain Fire Water Pressure.

Plant procedure SYS FP-290, "Temporary Fire Pump Operations," Revision 12, did not provide adequate instructions on how to prime and start the temporary diesel-driven fire pump. Valves that were required to be in a certain state were not detailed enough or labeled such that operators could place the equipment in the proper alignment to successfully prime and start the pump. In addition, the drawing that is supposed to show the installation of the temporary diesel-driven fire pump was missing key components that were required to be manipulated in order to put the pump in service. Operators were only given on-the-job training on this temporary pump with no lesson plan to follow and with minimal practice with the unit. A URI will be opened for failure to provide adequate procedures and training for the proper priming and startup of the temporary diesel-driven fire pump. This issue will be identified as URI 05000482/2012008-10, Review Inadequate Procedures and Training for Operation of the Temporary Diesel Fire Pump.

The temporary diesel-driven fire pump was not functionally identical to the original diesel-driven fire pump since it could not start automatically and provide the required backup to the electric motor-driven pump in the event of a LOOP, as the original diesel-driven fire pump was designed to do. This issue will be identified as URI 05000482/2012008-11, Assess Impact of Failure of Temporary Pump to Match the Functionality of Diesel Fire Pump.

10.0 Past Maintenance Impact (Charter Item #10)

a. Inspection Scope

The team conducted an overall review of the licensee's maintenance practices to determine if past maintenance activities could have contributed to the event, or impacted the response and recovery.

The team reviewed the sequence of events to determine which components did not perform as expected or performed poorly to determine the systems on which to focus. The team reviewed the maintenance history associated with these systems. The team also reviewed the updated final safety analysis report, technical specifications, system health reports, quality audits, design basis documents, condition reports, and interviewed personnel to verify that appropriate performance criteria were being monitored and maintained. The team also reviewed the technical adequacy of any evaluations associated with these systems to ensure that technical specification operability was properly justified.

b. Observations

The team identified one URI requiring follow-up inspection associated with determining whether the September 13, 2011, failure of the normal diesel fire pump was maintenance-related.

The team determined that past maintenance-related activities negatively impacted the LOOP response and recovery. Specifically, there were maintenance-related issues previously described in this report associated with the ESW system, the diesel-driven fire pump, the temporary diesel-driven fire pump, the turbine-driven AFW pump, and the carbon dioxide purge system. However, none of these conditions prevented the operating crew from performing a safe and controlled shutdown and cooldown and placing the reactor coolant system into a stable cold shutdown condition (Mode 5) within the required technical specification allowed outage time.

The 2011 failure of the normal diesel-driven fire pump resulted from a catastrophic failure of the pump's right angle drive during the performance of the monthly functionality test for the fire pump. The failed unit had 1060 operating hours (equivalent to 44 days of 24 hours/day operation) and had been installed for 27 years. The diesel-driven pump right angle drive had had several periodic oil samples that showed evidence of high concentrations of water and iron. These oil samples were taken every six months, and indicate bearing/bushing and shaft/gear wear along with a heavy concentration of water present. The recommended actions were "inspection for source of wear may be warranted at this time and check for source of water." The oil cooler for the right angle drive was replaced on August 18, 2011, as it was determined to be the only possible source of the water that continued to show up in the oil samples.

The licensee speculated that the pump seized and caused excessive torque to be placed on the gearbox, which resulted in the gearbox catastrophically failing. The license was having the manufacturer of the pump, Fairbanks-Morse, perform a failure analysis on the pump to determine if the pump caused the failure.

This issue will be identified as URI 05000482/2012008-12, Assess Cause of Normal Diesel Fire Pump Failure.

11.0 Impacts of Prolonged Loss of Offsite Power (Charter Item #11)

a. Inspection Scope

The team reviewed licensee actions taken in response to the prolonged LOOP. The following areas were specifically reviewed:

- Initial event response and ability of safety-related equipment to continue to function through their full design mission times
- Timing and capability to cool the plant down to Mode 5, including performing the required chemistry samples
- Capability to implement the site emergency plan

The team conducted interviews with various on-shift personnel and reviewed the post-trip report, which included control room logs, operator statements, and plant data trends. The review assessed the effectiveness of the procedure guidance in addressing the event and placing and maintaining the plant in a safe and stable condition. The licensee created roll-up condition report 47884 to address concerns about the extended LOOP on non-safety-related equipment.

b. Observations

Items that were not previously discussed in this report created additional challenges because of the duration of the LOOP:

- All three reactor coolant leakage detection systems were inoperable and resulted in the control room not recognizing a 5 gpm leak into the reactor containment building sump for roughly two and a half hours. Certain components of the leakage detection systems lost power during the LOOP. This could have resulted in not detecting a reactor coolant system leak within one hour as required by technical specifications; however, the actual leak was not reactor coolant system leakage and was not radioactive. The inspectors determined that the leakage detection systems were installed and operating in accordance with design specifications.

- Loss of power to the chemistry hot lab prevented the licensee from analyzing reactor coolant samples normally required for shutdown, but emergency procedures allowed for alternatives to support safe shutdown without power to the chemistry labs. Additionally, the licensee implemented an emergency temporary modification to restore partial power to the chemistry lab. When the team left the site, the licensee was evaluating design changes to ensure that chemistry labs maintain at least partial power through similar events.

- Localized flooding could have become a concern since most sump pumps lost power, particularly auxiliary building sump pumps. The licensee recognized this concern and implemented an emergency temporary modification to provide

power to the pumps. The licensee also dispatched additional personnel to ensure that the areas were appropriately controlled. When the team left the site, the licensee was evaluating design changes to maintain the pumps energized during LOOP events.

- Hydrogen from the main generator was emergency vented to prevent an explosive buildup. If the battery powered seal oil pumps had lost power, a potential fire or explosive environment could have been created in the turbine generator building. The licensee had a procedure for emergency venting of the main generator until CO_2 could be delivered to the site. The permanently installed CO_2 system has not been functional in several years and has not been a priority for repair. When the team left the site, the licensee was evaluating their position on restoring the installed CO_2 system to operational status.

The licensee used emergency temporary modifications to restore power to selected non-safety-related systems by using temporary generators. The licensee staged several temporary generators at various locations around the site to be able to provide power to desired equipment. When the team left the site, the licensee was assessing these modifications for further enhancements to be used in the event of a future LOOP event. The team determined that overall, safety-related equipment would have continued to operate through their full mission time.

The largest impact from the prolonged loss of power was the number and frequency of samples that chemistry had to perform as a result of losing the radiation monitoring system. The licensee documented this concern in condition report 47884 for further evaluation and determined that it had an "adverse operational affect for the plant in that Chemistry could not use their sampling equipment." Additionally, due to the nature of the fault on the main generator breaker, there was a need to promptly purge the hydrogen from the generator. Because Wolf Creek did not maintain their CO_2 system functional, they must have a vendor deliver bulk CO_2 when needed. They have a procedure to allow emergency venting the majority of the hydrogen until the CO_2 can be delivered to allow proper hydrogen purging. This could have been a challenge and could have potentially created an unsafe hydrogen condition had the operating crew not recognized the need to extend the life of the battery that was supplying power to the hydrogen seal oil pumps. The shift manager in discussion with the turbine watch agreed on the need to remove unnecessary loads from the battery to extend its life.

While there were challenges and difficulties as a result of the LOOP, the team determined that it did not impact the timing or capability of the crew to safely stabilize the plant in Mode 5, nor did it significantly impact the ability to take required chemistry samples.

The team also determined that the prolonged LOOP did not impact the ability of the station to implement the site emergency plan. The technical support center and the emergency operating facilities remained energized throughout the entire event from offsite power, and each facility had its own backup diesel generator. The team determined that the operating crew appropriately considered staffing the technical

support center, but decided that it would not have added any additional benefit over the manning of the forced outage recovery team that was already occurring. The shift manager's office in the control room lost power, but many of those activities were performed from the technical support center. The team determined that this did not prevent any actions from being performed. Emergency sirens remained available throughout the event. All required offsite notifications to state, local, and federal entities were complete, accurate, and accomplished within required timelines.

12.0 Independent Risk Assessment (Charter Item #12)

a. Inspection Scope

The team reviewed the sequence of events and equipment problems to support an independent assessment of the risk of the LOOP event.

b. Observations

The event was modeled as a switchyard-centered LOOP in the initial Management Directive 8.3 risk assessment. Because offsite power was not restored to the safety buses for 3.6 hours, recovery of offsite power was assumed to fail for sequences of 3 hours or shorter duration. Also, the diesel-powered fire water system was failed, reflecting the 9 hour delay in starting this pump and restoring fire water protection header pressure. These assumptions resulted in an initial conditional core damage probability of 8E-5.

Based on a review of the sequence of events and discussions with operators, the team refined the offsite power recovery assumptions. Because of the complications associated with restoring power to the vital buses, recovery of offsite power within one hour was still assumed to fail. For longer recovery durations (2 hours and above), the team determined that nominal baseline recoveries for a switchyard-centered LOOP would be appropriate. This was based on crediting the expedited actions that could be have been accomplished if the plant was in a blackout condition (i.e., no emergency diesel generator working).

Shortly after offsite power was lost, power-operated relief valve PCV-456A cycled 23 times during a 15-minute period. The repeated cycles of this valve increased the probability of it sticking open and creating a small-break loss of coolant accident. Accordingly, the team concluded that the probability of this valve failing to close should be considered to have increased by one order of magnitude. Also, the fact that power-operated relief valve PCV-455A was isolated by its block valve was a valid condition to include in the risk model.

The team concluded that the spurious turbine-driven AFW pump overspeed event did not reflect a need to adjust the baseline reliability of this equipment. This was because the pump ran normally for 12.5 hours and the trip was strictly a consequence of closing the trip and throttle valve while securing the pump. Also, the fact that the pump was run for several hours with flow dynamics inconsistent with its long-term operation was not a

basis for adjusting risk assumptions for this event. As discussed in Section 5, the pump bearings were neither damaged nor experienced any detectable wear. The operation of the pump outside of its normal operating condition was an equipment qualification issue that might affect its long-term operation, but it was not a factor in this event.

The leak in the ESW system was too small to challenge the function of the system, and this was true even if the leak had not been as quickly isolated. The team concluded that the pipe pitting corrosion experienced during recent history was unlikely to produce leaks of a size that could challenge the system function based on historical problems and non-destructive examination results for system piping. The type of corrosion that attacks ESW piping produces localized pits that would be unlikely to result in a catastrophic pipe failure. Accordingly, the team concluded that the ESW system should be assumed to have baseline reliability for this event.

The team found no information to change the initially assumed failure and long-term (9 hour) unavailability of the diesel-powered fire water pump. It was considered likely that a high priority would have been placed on restoring this pump if a fire had developed, but problems encountered in priming the pump would likely have delayed its restoration to a point where it would not have been made available quickly enough to have mitigated the consequences of a fire.

A senior reactor analyst used the updated assumptions to estimate the risk of the event. The Wolf Creek SPAR model, Revision 8.5, was used with a truncation of 1.0E-12 and with test and maintenance basic events removed. The resulting conditional core damage probability was 6.2E-5.

13.0 Assess Quality Assurance (QA), Radiological, Security, and Safety Conscious Work Environment (SCWE) Aspects (Charter Item #13)

a. Inspection Scope

The team reviewed the sequence of events, operator actions, management decisions, and equipment problems to determine whether issues existed related to QA, radiological exposure, security, and SCWE.

b. Observations

The team did not identify issues related to QA or radiological conditions.

The team identified a security issue associated with the design of the power supply for some protected area perimeter assessment equipment that was referred to NRC regional experts for follow-up inspection and is identified as URI 05000482/2012008-13, Assess Security Power Supply Anomaly.

14.0 Exit Meeting Summary

On March 6, 2012, the NRC held a public meeting and presented the inspection results to Mr. Matthew W. Sunseri and other members of the staff, who acknowledged the observations. The inspectors asked the licensee whether any of the material examined during the inspection should be considered proprietary. No proprietary information was identified.

SUPPLEMENTAL INFORMATION

KEY POINTS OF CONTACT

Licensee Personnel:

Bill Ketchum, Supervisor Engineer, Probabilistic Risk Assessment and Safety Analysis
Brad Norton, Manager, Engineering Programs
Brendan Ryan, Simulator Fidelity Coordinator
Brian Schafer, Engineer III
Brian Williams, Principal Engineer
Carlos Garcia, Supervisor Engineer, System Engineering
Carlos Hernandez, Engineer V
Charles Medenciy, Health Physics Supervisor
Chris Turner, Supervisor Quality Control
Curt Palmer, Supervisor Design Engineering
Dave Erbe, Manager Security
Dave Meredith, Principal Engineer
David Alford, Engineer V (Risk)
David Dees, Superintendent Operations
David Garrison, Operations Specialist III
Diane Hooper, Supervisor Licensing
Don Garbe, Engineer V, Fire Protection
Don Long, Engineer V
Dwight Gerrelts, Principal Engineering Technologist, System Engineering
Edward C. Holman, Supervisor Maintenance
Francis Brush, Consultant
Gerald Riste, Excel Consultant
Greg Kinn, Supervisor Nuclear Engineering
Jason Cameron, Sr. Nuclear Station Operator
Jeff Suter, Supervisor Engineer, Fire Protection
Jim Weeks, Principal Engineering Technologist, Modifications
Joe Helget, Engineer IV
John Broschak, Vice President Engineering
Josh Turner, Engineering Technologist IV
Justin Keim, Supervisor Engineer
Kevin Hermreck, Master Mechanic
Lou Solorio, Engineer V
Mark Ferrel, Supervisor Engineer, Engineering Programs
Mark Jenkins, Shift Manager
Martin Rabalais, Engineer V
Matt LeGresley, Engineer II, System Engineering
Neil Woydziak, Acting Manager, Chemistry
Paul Adam, Principal Engineer
Preston Lawson, Surveillance Coordinator, Operations
Randy Birk, Superintendent Maintenance
Reece Hobby, Licensing Engineer III
Rodney Wolfe, Operations Apprentice III

Robert Wisdom, Planner
Rich Clemens, Vice President Strategic Projects
Rich Flannigan, Manager Nuclear Engineering
Scott Good, Supervisor Security Support
Scott Maglio, Manager Regulatory Affairs – Callaway (STARS)
Seth Bell, Control Room Supervisor and Shift Technical Advisor
Shafayet Hossain, Engineer III
Stan Devena, Engineer
Steve Ernest, Principal Engineer Technologist
Steve Henry, Operations Manager
Steve Hopkins, Supervisor Maintenance
Steve Wideman, Principal Licensing Engineer
Tiffany Baban, Manager, System Engineering
Tim Dunlop, Control Room Supervisor
Tracy Fisher, Supervisor Maintenance
William Muilenburg, Licensing Engineer V

NRC personnel:

Christopher Long, Senior Resident Inspector
Charles Peabody, Resident Inspector

LIST OF ITEMS OPENED

05000482/2012008-01	URI	Review Main Generator Output Breaker Fault Cause (Section 1.2)
05000482/2012008-02	URI	Review Startup Transformer Fault Cause (Section 1.2)
05000482/2012008-03	URI	Review Turbine-Driven Auxiliary Feedwater Pump Mechanical Overspeed Trip Device out of Specification (Section 5.0)
05000482/2012008-04	URI	Review Operation of the Turbine-Driven Auxiliary Feedwater Pump at Low Flow, Steam Pressures, and Speed (Section 5.0)
05000482/2012008-05	URI	Assess Impact of Emergency Diesel Generator Ground on Mission Time (Section 6.0)
05000482/2012008-06	URI	Review Actions to Correct Water Hammer Events in the ESW System (Section 7.0)
05000482/2012008-07	URI	Review ESW Piping Corrosion Inspections (Section 7.0)
05000482/2012008-08	URI	Review Source Range Detector Deviation (Section 8.0)

05000482/2012008-09	URI	Review Failure to Maintain Fire Water Pressure (Section 9.0)
05000482/2012008-10	URI	Review Inadequate Procedures and Training for Operation of the Temporary Diesel Fire Pump (Section 9.0)
05000482/2012008-11	URI	Assess Impact of Failure of Temporary Pump to Match the Functionality of Diesel Fire Pump (Section 9.0)
05000482/2012008-12	URI	Assess Cause of Normal Diesel Fire Pump Failure (Section 10.0)
05000482/2012008-13	URI	Assess Security Power Supply Anomaly (Section 13.0)

LIST OF DOCUMENTS REVIEWED

DRAWINGS

Number	Title	Revision
E-02PA01	LOGIC DIAGRAM UNIT AUXILIARY SOURCE 13.8 KV BUS FEEDER BREAKERS	4
E-12PA02	LOGIC DIAGRAM STARTUP SOURCE 13.8 KV BUS FEEDER BREAKERS	0
E-13KJ02	SCHEMATIC DIAGRAM DIESEL GENERATOR KKJ01A ANNUNCIATOR AND MISCELLANEOUS CIRCUITS	7
E-13KJ04	SCHEMATIC DIAGRAM DIESEL GENERATOR KKJ01B ANNUNCIATOR AND MISCELLANEOUS CIRCUITS	8
E-13MR01	STARTUP TRANSFORMER THREE LINE DIAGRAM	3
E-13NB05	LOWER MEDIUM VOLTAGE SYS. CLASS 1E 4.16 KV THREE LINE METER AND RELAY DIAGRAM	2
E-13NE02	STANDBY GENERATION SYSTEM THREE LINE METER AND RELAY DIAGRAM	14
E-13PA03	HIGHER MEDIUM VOLTAGE SYSTEM 13.8 KV THREE LINE METER AND RELAY DIAGRAM	1
E-13PA04	HIGHER MEDIUM VOLTAGE SYSTEM 13.8 KV THREE LINE METER AND RELAY DIAGRAM	1
KD-7496	ONE LINE DIAGRAM	41

Number	Title	Revision
KD-7496A	DISTRIBUTION SYSTEM EQUIPMENT LINEUP LIMITATIONS	5
M-0023 SHEET 1	PIPING & INSTRUMENTATION DIAGRAM FIRE PROTECTION SYSTEM (FP)	53
M-0023 SHEET 2	PIPING & INSTRUMENTATION DIAGRAM FIRE PROTECTION SYSTEM (FP)	20
M-0023 SHEET 3	PIPING & INSTRUMENTATION DIAGRAM FIRE PROTECTION SYSTEM (FP)	33
M-0023 SHEET 4	SARGENTY AND LUNDY PIPING & INSTRUMENTATION DIAGRAM FIRE PROTECTION SYSTEM (FP)	15
M-018-00076	BELOIT POWER SYSTEMS ELECTRICAL SCHEMATIC DIESEL GENERATOR CONTROL NE107 (NE106)	14
M-018-00077 SHEET 1	BELOIT POWER SYSTEMS ELECTRICAL SCHEMATIC DIESEL GENERATOR CONTROL NE107 (NE106)	W17
M-018-00110 SHEET 6/11	BELOIT POWER SYSTEMS ELECTRICAL SCHEMATIC ENGINE GAUGE PANEL KJ121 (KJ122)	W13
M-018-00250 SHEET 1	BELOIT POWER SYSTEMS WIRING DIAGRAM GENERATOR CONTROL PANEL (NE107)	W15
M-018-00250 SHEET 2	BELOIT POWER SYSTEMS WIRING DIAGRAM GENERATOR CONTROL PANEL (NE106)	W03
M-018-00251 SHEET 1	BELOIT POWER SYSTEMS WIRING DIAGRAM GENERATOR CONTROL PANEL	W13
M-018-00635	WESTINGHOUSE ELECTRIC CORPORATION COLT INDUSTRIES TYPE “WNR” VOLTAGE REGULATOR AND EXCITATION SYSTEM EXCITATION SCHEMATIC	W02
M-018-00688 SHEET 1	BELOIT POWER SYSTEMS ASSEMBLY DRAWING GENERAL CONTROL AND RELAY PANEL NE107 (NE106)	W09
M-13EF09(Q)	SMALL PIPING ISOMETRIC ESSENTIAL SERVICE WATER SYSTEM AUX. BLDG. A TRAIN SUPPLY AND RETURN	0
M-13EF10	SMALL PIPE ISOMETRIC ESSENTIAL SERVICE WTR. PIPE CHASE VENTS & DRAINS TRAIN B AUXILIARY BUILDING	4
M-13EF11	SMALL PIPE ISOMETRIC ESSENTIAL SERVICE WTR. PIPE CHASE VENTS & DRAINS TRAIN A AUXILIARY BUILDING	1
M-13EF12(Q)	PIPING ISOMETRIC ESSENTIAL SERVICE WATER FUEL BUILDING	5

Number	Title	Revision
M-13EF13	SMALL PIPING ISOMETRIC MISCELLANEOUS DETAILS ESSENTIAL SERVICE WATER SYSTEM	8
M-13EF16	PIPING ISOMETRIC ESSENTIAL SERVICE WATER SYSTEM TURBINE BUILDING	4
M-13EF17	PIPING ISOMETRIC ESSENTIAL SERVICE WATER SYSTEM TURBINE BUILDING	1
M-15EF01(Q)	HANGER LOCATION DWG. ESSENTIAL SERVICE WATER CONTROL BLDG. (A&B) TRAIN	6
M-15EF02	HANGER LOCATION DWG. ESSENTIAL SERVICE WATER SYSTEM AUX. BLDG. A TRAIN SUPPLY	25
M-15EF03	HANGER LOCATION DWG. ESSENTIAL SERVICE WATER SYSTEM AUX. BLDG. A TRAIN RETURN	18
M-15EF04(Q)	HANGER LOCATION DWG. ESSENTIAL SERVICE WATER SYS. AUX. BLDG. B TRAIN SUPPLY	8
M-15EF05	HANGER LOCATION DWG. ESSENTIAL SERVICE WATER SYS. AUX. BLDG. B TRAIN RETURN	16
M-15EF06	HANGER LOCATION DWG. ESSENTIAL SERVICE WATER SYS. AUX. BLDG. A&B TRAIN SUPPLY AND RETURN	19
M-15EF07(Q)	HANGER LOCATION DWG. ESSENTIAL SERVICE WATER SYSTEM CONTROL BLDG. COOLER (A&B) TRAIN SUPPLY RTN.	4
M-15EF08	HANGER LOCATION DWG. ESSENTIAL SERVICE WATER SYSTEM DIESEL GENERATOR BLDG.	7
M-15EF14	HANGER LOCATION DWG. ESSENTIAL SERVICE WATER SYS. CLASS 1E SWITCHGEAR A/C COND. CONTROL A TRAIN	9
M-15EF15	HANGER LOCATION DWG. ESSENTIAL SERVICE WATER SYS. CLASS 1E SWITCHGEAR A/C COND. CONTROL B TRAIN	3
M-15GN01	HANGER LOCATION DWG. CONTAINMENT COOLING SYSTEM REACTOR BUILDING TRAIN A	6
M-15GN02	LOCATION DWG. CONTAINMENT COOLING SYSTEM REACTOR BUILDING TRAIN B	6
M-K2EF01	PIPING AND INSTRUMENTATION DIAGRAM ESSENTIAL SERVICE WATER SYSTEM	57

Number	Title	Revision
M-K2EF03	PIPING AND INSTRUMENTATION DIAGRAM ESSENTIAL SERVICE WATER SYSTEM	11
SK2131 SHEET 1 OF 2	WESTAR ENERGY BENTON SUBSTATION ONE-LINE DIAGRAM (BENT)	4
SK9392 SHEET 1 OF 3	WESTAR ENERGY ROSE HILL SUBSTATION ONE-LINE DIAGRAM (ROSE)	3

PROCEDURES

Number	Title	Revision
AP 02-007	ABNORMAL CONDITIONS GUIDELINES	13
AP 02A-001	PRIMARY CHEMISTRY CONTROL	15A
AP 10-103	FIRE PROTECTION IMPAIRMENT CONTROL	23
AP 10-103	FIRE PROTECTION IMPAIRMENT CONTROL	24
AP 10-103	FIRE PROTECTION IMPAIRMENT CONTROL	25
AP 15C-004	PREPARATION, REVIEW AND APPROVAL OF PROCEDURES, INSTRUCTIONS AND FORMS	40A
EDMG-T01	EDMG TOOL BOX	8
EMG C-0	LOSS OF ALL AC POWER	22
EMG C-0	LOSS OF ALL AC POWER	23
EMG E-0	REACTOR TRIP OR SAFETY INJECTION	27
EMG ES-02	REACTOR TRIP RESPONSE	25
EMG ES-04	NATURAL CIRCULATION COOLDOWN	14B
EPP 06-005	EMERGENCY CLASSIFICATION	4B
MGE TP-005	TEMPORARY POWER FOR PA02 SUPPLIED LOADS	10
OFN KC-016	FIRE RESPONSE	32A
OFN NB-030	LOSS OF AC EMERGENCY BUS NB01 (NB02)	27
RNM C-0534	GENERATOR FIELD DIRECT CURRENT RELAY TYPE DGF	3

Number	Title	Revision
STN FC-002	AUX FEEDWATER TURBINE OVERSPEED TEST	05/23/2011
STN PE-040G	TRANSIENT EVENT WALKDOWN	4
STN PE-049E	TRANSIENT EVENT ESSENTIAL SERVICE WATER SYSTEM INSPECTION	1
STS AL-103	TURBINE-DRIVEN AFW PUMP INSERVICE PUMP TEST	12/07/2011
STS CR-001, Att. A pg 57	SHIFT LOG FOR MODES 1, 2, & 3	77C
STS NB-005	BREAKER ALIGNMENT VERIFICATION	22
SYS AL-120	DRIVEN OR TURBINE-DRIVEN AFW PUMP OPERATIONS	41
SYS CC-320	GENERATOR HYDROGEN AND CARBON DIOXIDE SYSTEM PURGING TO AIR	27
SYS CC-321	GENERATOR HYDROGEN EMERGENCY DEPRESSURIZATION	1
SYS FP-290	TEMPORARY FIRE PUMP OPERATIONS	10
SYS FP-290	TEMPORARY FIRE PUMP OPERATIONS	11
SYS FP-290	TEMPORARY FIRE PUMP OPERATIONS	12
SYS FP-290	TEMPORARY FIRE PUMP OPERATIONS	13
SYS FP-290	TEMPORARY FIRE PUMP OPERATIONS	14
SYS NB-320	DEENERGIZING AND ENERGIZING ESF TRANSFORMERS	8
TMP 12-007	PLACING PA BUSES ON STARTUP XFMR WITH 345-60 BREAKER UNAVAILABLE	0

CALCULATIONS

Number	Title	Revision
XX-E-006	AC SYSTEM ANALYSIS	

DESIGN BASIS DOCUMENTS (DBD)

Number	Title	Revision
FSAR Ch 15	ACCIDENT ANALYSIS	11

SYSTEM HEALTH REPORTS

Number	Title	Revision
	AUXILIARY FEEDWATER	10/1/2011 - 12/31/2011
	ESSENTIAL SERVICE WATER	10/1/2011 - 12/31/2011

MISCELLANEOUS DOCUMENTS

Number	Title	Revision/Date
013690	CHANGE PACKAGE FOR CT WIRING JUNCTION BLOCK XMR01	1
UIN 012ADC8	ALS TRIBOLOGY DIESEL ENGINE UNIT NO. FP-D1FP001B OIL SAMPLE LAB RESULTS (FOR THE PERIODS SEPTEMBER 21, 2006 TO MARCH 19, 2009)	
UIN 012ADC8	ALS TRIBOLOGY DIESEL ENGINE UNIT NO. FP-D1FP001B OIL SAMPLE LAB RESULTS (FOR THE PERIODS MARCH 25, 2010 TO JULY 23, 2011)	
UIN 012ADC5	ALS TRIBOLOGY GEARBOX UNIT NO. FP-D1FP001B OIL SAMPLE LAB RESULTS (FOR THE PERIODS JUNE 15, 2006 TO JUNE 8, 2009)	
UIN 012ADC5	ALS TRIBOLOGY GEARBOX UNIT NO. FP-D1FP001B OIL SAMPLE LAB RESULTS (FOR THE PERIODS JANUARY 11,2010 TO SEPTEMBER 15, 2011)	
	WCNOC ULTRASONIC THICKNESS REPORT WP# 12-350393-005	01/15/2012
TR-92-0063 W01	INDIVIDUAL PLANT EXAMINATION REPORT	09/1992
IIT 10-01	INVESTIGATION INTO THE MATERIAL CONDITION OF ESW PIPING AND EVENTS FROM CR 00026466 AND CR 00028474	0
	CONTROL ROOM LOGS	01/13/2012 – 02/04/2012
	PMO PROJECT STATUS	01/27/2012

Number	Title	Revision/Date
	SEQUENCE OF EVENTS LOG	01/13/2012
13837	CHANGE PACKAGE: GENERATOR CO2 AND HYDROGEN PIPE ROUTE	0, 1
CR-001 through 004	WOLF CREEK GENERATING STATION EMERGENCY NOTIFICATION	01/13/2012
EN 47590	EVENT NOTIFICATION WOLF CREEK LOSS OF OFFSITE POWER	01/13/2012
WCAP-16423-NP	PRESSURIZED WATER REACTOR OWNERS GROUP STANDARD PROCESS AND METHODS FOR CALCULATING RCS LEAKRATE FOR PRESSURIZED WATER REACTORS	0
STS RE-004, Performed 1/13/12 @ 1511	SHUTDOWN MARGIN DETERMINATION	04A
STS RE-004, Performed 1/13/12 @ 1817	SHUTDOWN MARGIN DETERMINATION	04A
ES-0.2 Background, HES02BG	WOG BACKGROUND FOR EMERGENCY PROCEDURES	2
Foldout	WOG BACKGROUND FOR EMERGENCY PROCEDURES	2

VENDOR MANUALS

Number	Title	DATE
I.L. 41-747G	WESTINGHOUSE TYPE DGF GENERATOR FIELD RELAY	02/1977
M-021-00086 W40	INSTRUCTION MANUAL FOR TURBINE TERRY CORP.	11/09/2010
	TERRY TURBINE MAINTENANCE GUIDE, AFW APPLICATION	11/2002

DESIGN CHANGE NOTIFICATIONS (DCN)

Number	Title	Revision
NO NUMBER	DIESEL FIRE PUMP REPLACEMENT	0
DRR 11-2344-P01	EMG E-0 REACTOR TRIP OR SAFETY INJECTION	27

ENGINEERING REPORTS (ER)

Number	Title	Revision
WO 11-339015-004	N31 LOSS OF CAVITY COOLING ON 3/19/2011	0
WO 12-350418-005	N31 LOSS OF CAVITY COOLING ON 1/13/2012	0
CR 00039533, SWO 11-341977	INTERIM OPERATION WITH A DEGRADED SOURCE RANGE DETECTOR, SENI0031	0

TEMPORARY MODIFICATION ORDER

Number	Title	Revision
12-008-FP	1FP001PB – DIESEL-DRIVEN FIRE PUMP (INSTALLATION OF A TEMPORARY DIESEL FIRE PUMP)	0
11-009-KH-0	TEMPORARY MODIFICATION FOR CO2 TRUCK FILL CONNECTION	0
12-002-XX-0	TEMP POWER ACCESS FOR CHEM HOT LAB EQUIP	0
12-003-KJ	TEMP POWER FOR PG019 AND PG020, AND XNB01 CONTROL CIRCUIT	0, 1
12-004-PG-1	LOAD CENTER PG13	0, 1

WORK ORDERS (WO)

09-320434-003	09-322358-000	11-340360-006	11-342312-000	11-342312-001
11-342625-000	11-342625-001	11-343739-000	11-343739-001	11-344786-000

11-345429-008	11-346720-000	11-346762-017	12-350382-000	12-350382-001
12-350382-002	12-350382-004	12-350382-006	12-350382-014	12-350382-015
12-350382-016	12-350382-017	12-350382-018	12-350382-019	12-350382-020
12-350382-021	12-350382-022	12-350387-000	12-350387-001	12-350387-002
12-350387-003	12-350391-001	12-350395-000	12-350396-000	12-350396-001
12-350398-000	12-350416-000	12-350427-000	12-350443-002	12-350443-003
12-350443-004	12-350443-006	12-350443-010	12-350443-012	12-350470-000
12-350471-000	12-350479-000	12-350604-000	12-350646-000	12-350656-000
12-350657-000	12-350869-000	12-350898-000	12-350937-000	12-350937-001

CONDITION REPORTS (CR)

25834	26466	28474	35122	37200
39512	39909	39910	40282	43710
47543	47552	47647	47648	47653
47654	47656	47658	47660	47661
47665	47666	47667	47670	47674
47678	47700	47708	47722	47724
47727	47728	47729	47735	47736
47738	47739	47741	47752	47752
47758	47760	47774	47778	47787
47834	47848	47849	47881	47884
47886	47893	47917	47926	47932
47940	47942	47965	47976	48021
48025	48026	48033	48036	48046
48049	48083	48103	48104	48133
48155	48172	48320	48368	48369
48372	48375	48422	48466	48512
48517	48527	48534*	48574*	48624*
48643	48677*	48687*	48693	48764
2006-102				

*CR’s issued as a result of inspection activities.

SEQUENCE OF EVENTS

Wolf Creek Nuclear Operating Company

Date/Time	Event Description
January 13, 2012	The plant is at one hundred percent rated thermal power, with no plant evolutions in progress, transmission switching, or adverse weather conditions; pressurizer power operated relief valve PCV-455A block valve is closed due to leakby on PCV-455A.
14:02:54.707	Main generator output breaker 345-60 C phase develops a fault
14:02:54.740	Wolf Creek 345 kV east bus differential sensed
14:02:54.755	Wolf Creek main generator transformer lockout
14:02:54.757	East bus 345-120 breaker opens
14:02:54.758	East bus 345-90 breaker opens
14:02:54.759	Main generator output breaker 345-60 C phase failure (most likely failure is foreign material by process of elimination); east bus 345-60 breaker opens. 345 kV east bus is deenergized as a result of breakers 345-60, 345-90, and 345-120 opening.
14:02:54.767	Unit trip signal, turbine trips
14:02:54.768	Main generator output breaker 345-50 breaker opens
14:02:54.769	13-48 transformer No. 7 opens, removing power to safety-related train A 4160 Vac bus
14:02:54.787	Main generator protective relay trip, main generator trips
14:02:54.816	Fast bus transfer of nonvital buses from unit auxiliary transformer to startup transformer begins, PA0211 breaker opens
14:02:54.823	PA0101 breaker opens
14:02:54.833	PA0202 breaker closes
14:02:54.841	PA0110 breaker closes, this completes the fast transfer
14:02:54.919	Startup transformer protective relay trips on B phase differential
14:02:54.930	Wolf Creek 345 kV west bus differential lockout
14:02:54.932	West bus 345-40 breaker opens

14:02:54.933	West bus 345-110 breaker opens
14:02:54.934	West bus 345-70 breaker opens; the 345 kV west bus is deenergized as a result of breakers 345-40, 345-70, and 345-110 opening. Loss of offsite power; the 345 kV east and west buses are deenergized.
14:02:54.972	PA0202 breaker opens
14:02:54.975	PA0110 breaker opens
14:02:54.979	PA0201 breaker opens, removing power to safety-related train B 4160 Vac bus
14:02:54.994	Reactor main trip breaker B opens. Reactor trips due to turbine trip and reactor power greater than 50 percent.
14:02:55.006	Reactor main trip breaker A opens. The plant is in Mode 3
14:02:55.984	NB0112 breaker opens, disconnecting power from offsite to the safety-related train A 4160 Vac bus
14:02:56.102	NB0209 breaker opens, disconnecting power from offsite to the safety-related train B 4160 Vac bus
14:02:57	Instrument air pressure starts to decrease due to loss of power to the air compressors. Letdown isolates due to loss of power.
14:02:59.241	Steam generator A atmospheric vent valve opens
14:03	Motor-driven fire pump and the jockey fire pump are without power as a result of the LOOP. Temporary diesel-driven fire pump is drained to prevent freezing and does not start automatically on loss of power (normal diesel-driven fire pump would have started automatically).
14:03:01.006	Loop 2 supply valve to turbine-driven AFW opens
14:03:01.079	Steam generator D atmospheric vent valve opens
14:03:01.295	Loop 3 supply valve to turbine-driven AFW opens
14:03:01.482	Steam generator C atmospheric vent valve opens
14:03:02.656	Emergency diesel generator B is running; output breaker NB0211 closes, reenergizing the train B safety-related 4160 Vac bus.
14:03:02.953	Emergency diesel generator A is running; output breaker NB0111 closes, reenergizing the train A safety-related 4160 Vac

	bus.
14:03:02.973	Steam generator B atmospheric vent valve opens
14:03:04.390	Steam dump valve group 1 opens
14:03:04.442	Steam dump valve group 3 opens
14:03:04.546	Steam dump valve group 4 opens
14:03:04.629	Steam dump valve group 2 opens
14:03:05.886	Steam dump valve group 3 closes
14:03:05.965	Steam dump valve group 4 closes
14:03:06.260	Steam dump valve group 2 closes
14:03:07.116	Steam dump valve group 1 closes
14:03:46.853	Steam generator B atmospheric vent valve closes
14:04:08.239	Steam generator D atmospheric vent valve closes
14:04:08.518	Steam generator C atmospheric vent valve closes
14:04:28.149	Steam generator A atmospheric vent valve closes
14:08:06	Charging flow starts to increase due to loss of instrument air to containment
14:09:28.467	Main steam isolation valve loop 4 closes
14:09:28.491	Main steam isolation valve loop 2 closes
14:09:28.569	Main steam isolation valve loop 1 closes
14:09:28.581	Main steam isolation valve loop 3 closes
14:10:19.739	Instrument air to containment isolation valve is closed
14:12	Commenced EMG ES-02, Reactor Trip Response
14:13	Completed EMG E-0, Reactor Trip or Safety Injection
14:13:55	Charging flow reaches maximum rate as a result of loss of instrument air to containment. With no letdown and maximum charging, the pressurizer begins to fill and reactor coolant system pressure starts to increase.
14:15	Notification of Unusual Event is declared for EAL-6 due to a LOOP expected to last longer than 15 minutes
14:16	Source range nuclear instruments have energized
14:19:31	Pressurizer power operated relief valve PCV-456A lifts
14:19:32	Pressurizer power operated relief valve PCV-456A reseats

14:20:39	Pressurizer power operated relief valve PCV-456A lifts
14:20:40	Pressurizer power operated relief valve PCV-456A reseats
14:21:30	Pressurizer power operated relief valve PCV-456A lifts
14:21:32	Pressurizer power operated relief valve PCV-456A reseats
14:22:15	Pressurizer power operated relief valve PCV-456A lifts
14:22:16	Pressurizer power operated relief valve PCV-456A reseats
14:22:50	Pressurizer power operated relief valve PCV-456A lifts
14:22:51	Pressurizer power operated relief valve PCV-456A reseats
14:23:20	Pressurizer power operated relief valve PCV-456A lifts
14:23:21	Pressurizer power operated relief valve PCV-456A reseats
14:23:47	Pressurizer power operated relief valve PCV-456A lifts
14:23:48	Pressurizer power operated relief valve PCV-456A reseats
14:24:14	Pressurizer power operated relief valve PCV-456A lifts
14:24:15	Pressurizer power operated relief valve PCV-456A reseats
14:24:41	Pressurizer power operated relief valve PCV-456A lifts
14:24:42	Pressurizer power operated relief valve PCV-456A reseats
14:25:08	Pressurizer power operated relief valve PCV-456A lifts
14:25:09	Pressurizer power operated relief valve PCV-456A reseats
14:25:33	Pressurizer power operated relief valve PCV-456A lifts
14:25:34	Pressurizer power operated relief valve PCV-456A reseats
14:25:58	Pressurizer power operated relief valve PCV-456A lifts
14:25:59	Pressurizer power operated relief valve PCV-456A reseats
14:26:23	Pressurizer power operated relief valve PCV-456A lifts
14:26:24	Pressurizer power operated relief valve PCV-456A reseats
14:26:48	Pressurizer power operated relief valve PCV-456A lifts
14:26:49	Pressurizer power operated relief valve PCV-456A reseats
14:27:13	Pressurizer power operated relief valve PCV-456A lifts
14:27:14	Pressurizer power operated relief valve PCV-456A reseats
14:27:38	Pressurizer power operated relief valve PCV-456A lifts
14:27:39	Pressurizer power operated relief valve PCV-456A reseats

14:28:05	Instrument air compressors are restarted; instrument air pressure returning to normal. Charging flow is returning to normal.
14:28:57	Pressurizer power operated relief valve PCV-456A lifts
14:28:58	Pressurizer power operated relief valve PCV-456A reseats
14:29:45	Pressurizer power operated relief valve PCV-456A lifts
14:29:47	Pressurizer power operated relief valve PCV-456A reseats
14:30:49	Pressurizer power operated relief valve PCV-456A lifts
14:30:50	Pressurizer power operated relief valve PCV-456A reseats
14:32:06	Pressurizer power operated relief valve PCV-456A lifts
14:32:08	Pressurizer power operated relief valve PCV-456A reseats
14:32:47	Pressurizer power operated relief valve PCV-456A lifts
14:32:48	Pressurizer power operated relief valve PCV-456A reseats
14:33:25	Pressurizer power operated relief valve PCV-456A lifts
14:33:26	Pressurizer power operated relief valve PCV-456A reseats
14:34:32	Pressurizer power operated relief valve PCV-456A lifts
14:34:33	Pressurizer power operated relief valve PCV-456A reseats
14:35:54	Letdown restored to service; reactor coolant system pressure is maintained below pressurizer power operated relief valve setpoint for remainder of event.
14:37	Site watch reported breaker 345-60 has visible damage
14:47	Fire protection informed to commence fire impairments for LOOP
15:00	Fire protection discussed with control room that the station did not have fire water system available. Reestablishing fire water was not a priority for operations at this time.
15:01	Natural circulation flow verified per EMG ES-02, Reactor Trip Response, Attachment A
15:02	One hour continuous fire watch compensatory measures were not established for loss-of-fire water
15:30	Restored spent fuel pool cooling
15:50	Completed EMG ES-02, Reactor Trip Response
15:51	Commenced EMG ES-04, Natural Circulation Cooldown

16:45	Senior reactor operator reviewing post-trip review trends identifies a possible water leak inside containment; suspect essential service water based on containment parameters. 345 kV east bus reenergized from La Cygne line by closing breaker 345-120. The air disconnects for breaker 345-60 were opened first.
16:56	Shift manger directed the site watch to rack out the motor-driven fire pump breaker. Site watch made several attempts to prime and start the temporary diesel-driven fire pump.
17:00	Closed breaker 13-48 for transformer No. 7 to energize train A safety-related 4160 Vac from offsite source
17:09	Wolf Creek exited the Notification of Unusual Event because one source of offsite power had been restored.
17:14	Source range nuclear instrument NI-31 indication began trending up; known issue from loss-of-cavity cooling that is undergoing troubleshooting.
17:21	Emergency diesel generator A secured
17:30	Fire protection and engineering provide initial coverage for continuous fire watch areas deemed to be the most important; however, they are not qualified to stand fire watch.
17:36	Commenced reactor coolant system cooldown per EMG ES-04, Natural Circulation Cooldown
17:37	After entering containment, personnel identified essential service water leak on the C containment cooler (~5 gpm)
17:46	Essential service water leak on the C containment cooler is isolated
18:00	Temporary diesel-driven fire pump start did not work due to drain valve left open
19:02	Authorized emergency temporary modification to cut 3-inch hole in control building to provide temporary power to chemistry hot lab to perform reactor coolant sampling
19:28	Commenced startup transformer B phase differential testing
20:00	Emergency hydrogen purge of the main generator started. Qualified fire watch reliefs were obtained.
21:00	Emergency hydrogen purge of the main generator secured
21:40	345 kV west bus reenergized by closing breaker 345-40
21:42	Temporary modification to provide temporary power to chemistry

	hot lab is complete
21:51	Temporary diesel-driven fire pump was primed using the fire truck taking a suction from the lake and is now running
22:07	Chemistry lab has power and analyzes reactor coolant system boron concentration of 1716 ppm, greater than the required shutdown value
23:10	Temporary diesel-driven fire pump supplying fire protection header

January 14, 2012

00:00	Source range nuclear instrument NI-31 indication began trending down as a result of reactor coolant system cooldown
01:12	Plant enters Mode 4
02:44	Turbine-driven AFW pump tripped on overspeed while securing the pump
03:08	Residual heat removal pump B placed in service for shutdown cooling
04:55	Completed purging the main generator with CO2
07:50	Plant enters Mode 5
11:26	Essential service water leak on C containment cooler determined to be through-wall leak on the main header
12:36	Control room received emergency diesel generator B trouble alarm; local operator reports a generator field ground alarm. Emergency diesel generator B readings are all stable.
13:32	Authorized emergency temporary modification to power the emergency diesel generator starting air compressors, the auxiliary building sump pumps, and transformer auxiliaries
13:37	Reactor coolant system cooldown has been completed, cooldown secured.
14:34	Residual heat removal pump A aligned for shutdown cooling
20:14	Residual heat removal pump A placed in service for shutdown cooling
20:46	Secured residual heat removal pump B
22:48	Temporary power has been installed for the emergency diesel generator starting air compressors, the auxiliary building sump pumps, and transformer auxiliaries

January 15, 2012

02:35	Emergency diesel generator starting air reservoirs are at normal pressure, auxiliary building sump pumps are running lowering sump level slowly, and transformer auxiliaries have power
04:40	Auxiliary building sump pumps are not lowering level
06:11	Closed the alternate feeder breaker NB0212 to power train B from train A once in Mode 5
06:21	Opened the emergency diesel generator B output breaker NB0211
06:26	Emergency diesel generator B secured
15:35	Troubleshooting activities on emergency diesel generator B identified a ground on the generator field
15:54	Auxiliary building sump pumps were determined to be wired backwards during the emergency temporary power modification

January 16, 2012

16:00	Completed EMG ES-04, Natural Circulation Cooldown
17:00	Temporary diesel-driven fire pump was secured to check engine oil and reconnect a buoy to a suction hose. Fire truck was used to maintain pressure on fire protection pressure.
17:30	Fire truck lost prime and resulted in loss-of-fire protection pressure
18:00	Temporary diesel-driven fire pump was restarted and fire protection pressure was restored

January 17, 2012

21:00	Commenced back-feeding offsite power through the main and unit auxiliary transformers to power the non-safety-related buses (air links for main generator opened, breakers PA0101 and PA0211 closed)

January 19, 2012

00:51	Motor-driven fire pump was started to test the breaker that had been racked out

05:00	Temporary diesel-driven fire pump was secured
05:45	It was determined that the running motor-driven fire pump had caused the temporary diesel-driven fire pump to dead-head due to the location of the recirculation line and the discharge check valve; temporary diesel-driven fire pump is unavailable.

January 21, 2012

18:00	Temporary diesel-driven fire pump repaired, discharge check valve relocated to prevent future damage, two priming pumps replaced, main pump was replaced

January 23, 2012

18:00	Successfully completed performance testing of the temporary diesel-driven fire pump, declared functional and has remained in continuous operation

February 3, 2012

11:56	345 kV west bus deenergized by opening breakers 345-40, 345-70, and 345-110 to support closing the air break to the startup transformer for no-load testing
12:07	Energized the 345 kVac west bus and the startup transformer by closing breaker 345-70
12:28	Closed breakers 345-110 and 345-40
13:50	Energized PA01 from startup transformer by closing breaker PA0110
14:05	Energized PA02 from startup transformer by closing breaker PA0202
17:09	Energized train B safety-related 4160 Vac from the startup transformer by closing breaker PA0201
19:08	Emergency diesel generator B started for ground testing
19:33	Emergency diesel generator B at full load
19:46	Startup transformer testing is complete, startup transformer returned to service
19:54	Startup transformer stress cones have been reworked
23:52	Cables associated with the startup transformer have been replaced

23:53	Emergency diesel generator B field ground alarm in

February 4, 2012

00:09	Emergency diesel generator B ground detection relay replaced
01:08	Emergency diesel generator B secured
05:26	Startup transformer to safety-related train B bus damaged wires replaced to return breaker PA0201 to service
05:32	Startup transformer to PA01 bus potential transformer PT-113-1 replaced to return breaker PA0110 to service
11:02	Emergency diesel generator B started for ground testing
11:28	Emergency diesel generator B output breaker NB0211 is closed
11:42	Emergency diesel generator B at full load
11:45	Emergency diesel generator B field ground alarm in
12:24	Emergency diesel generator B secured, next restart will be when the vendor arrives onsite to assist ground testing

February 13, 2012

20:08	Attempted to start reactor coolant pump A. Startup transformer protective relay trips on B phase differential; breakers PA0110, PA0201, and PA0202 open. Loss of 4160 Vac safety-related train B equipment.
20:56	4160 Vac safety-related buses are cross tied, train B equipment power restored

UNITED STATES
NUCLEAR REGULATORY COMMISSION
REGION IV
1600 EAST LAMAR BLVD
ARLINGTON, TEXAS 76011-4511

January 27, 2012

MEMORANDUM TO: Mark Haire, Chief, Operations Branch
Division of Reactor Safety

FROM: Elmo E. Collins, Regional Administrator ***/RA AHowell for/***
Region IV

SUBJECT: AUGMENTED INSPECTION TEAM CHARTER TO EVALUATE THE LOSS OF OFFSITE POWER EVENT AT WOLF CREEK GENERATING STATION

You have been selected to lead an Augmented Inspection Team (AIT) to assess the circumstances surrounding the complete loss of offsite power and reactor trip event that resulted in the declaration of a Notification of Unusual Event (NOUE) on January 13, 2012. The following are the other team members.

- Mike Runyan (Region IV)
- John Dixon (Region IV)
- Brian Correll (Region IV)
- John Watkins (Region IV)
- Gurcharan Matharu (NRR)
- Jesse Robles (NRR)

A. Basis

On January 13, 2012, Wolf Creek Generating Station declared a Notification of Unusual Event (NOUE) at 2:15 p.m. CST following an automatic reactor trip and loss of offsite power that occurred at 2:03 p.m. CST. The failure of a main generator output breaker, followed by an unexplained loss of power to the startup transformer, caused the switchyard to be deenergized, which removed the plant's connection to the power grid. All safety systems initially responded as expected, and emergency diesel generators automatically powered safety-related equipment.

At 5:09 p.m. on January 13, Wolf Creek terminated the NOUE after offsite power was partially restored. Plant personnel are continuing to investigate the cause of the failure and determine necessary repairs. The plant is in a safe condition and has been brought to the cold shutdown operating mode, with offsite power supplying safety-related loads and select non-vital loads and the emergency diesel generators secured. The licensee restored power to most of the plant systems on January 17 after verifying that the

non-vital switchboards were safe to energize. There were no radiological releases due to this event.

In accordance with Management Directive 8.3, "NRC Incident Investigation Program," deterministic and conditional risk criteria were used to evaluate the level of NRC response for this operational event. This event met deterministic criteria for multiple failures in systems used to mitigate the event, and repetitive failures or events involving safety-related systems. The initial risk assessment, while subject to some uncertainties, indicates that the conditional core damage probability for the event is in the overlap range for a special inspection/augmented inspection. Region IV, in consultation with the Office of Nuclear Reactor Regulation (NRR), concluded that the NRC response should be an AIT.

This augmented inspection is chartered to identify the circumstances surrounding this event, review the licensee's actions following discovery of the conditions, and evaluate the responses of plant equipment and the licensee to the event.

B. Scope

The augmented inspection team is to perform data gathering and fact finding in order to address the following:

1. Develop an event chronology of significant events during the loss of offsite power and the trip, the subsequent cooldown, recovery efforts, and troubleshooting/cause analysis. This should include identifying the conditions preceding the event, system responses, and equipment performance. Assess and document the available information on the probable cause of the loss of offsite power.

2. Assess licensee actions taken in response to the event, actions to cool the plant down, and actions performed during recovery of plant systems, other operator actions, and event classification and reporting.

3. Assess procedure use and adequacy for this event.

4. Assess whether plant systems responded as expected. Compare the actual plant response to the applicable safety analyses.

5. Assess whether the turbine-driven auxiliary feedwater pump was operated in accordance with station procedures and the vendor's recommendations. Assess the licensee's efforts to identify the cause of the unexpected overspeed trip alarm while operators were shutting down the pump.

6. Assess the licensee's efforts to identify the source of the ground on emergency diesel generator (EDG) B. Evaluate whether the cause of the ground would have impacted the ability of the EDG to perform reliably through its design mission time.

7. Determine whether the loss of power and subsequent restarting of the essential service water pumps resulted in an abnormal system pressure transient. Assess the licensee's corrective action adequacy and timeliness in correcting this known design

problem. Use test records to identify which sections of essential service water piping have been subject to recent non-destructive examination to identify pitting that does not meet minimum wall thickness requirements, and which sections have not. Compare this result to the licensee's corrective action documentation to identify whether there are areas that were missed or not correctly reported. Assess the licensee's overall plan and schedule for piping inspections to determine whether this has been timely and whether they adequately considered the safety significance.

8. Assess the impact of the deviation between source range nuclear instrument channels on operator decision-making and the ability to verify adequate shutdown margin existed. Assess the appropriateness and timeliness of the licensee's cause assessment and corrective action for this condition.

9. Assess the cause of the initial diesel-driven fire pump failure. Evaluate the adequacy of the temporary modification to be able to meet the design and licensing basis requirements for the system. Evaluate the adequacy of the actual installation and operating procedures, including suction source, weather protection, minimum flow design, and ability to maintain system pressure during a prolonged loss of power. Identify the sequence of events that led to subsequent pump failure when the motor-driven fire pump was returned to service.

10. Assess whether past maintenance-related activities could have contributed to the event, or impacted the response and recovery.

11. Assess the impact of the prolonged loss of offsite power to non-safety-related equipment on: the initial event response and ability of safety-related equipment to continue to function through their full design mission times; the timing and capability to cool the plant down to Mode 5, including being able to take required chemistry samples; and the capability to implement the site emergency plan

12. Collect data to support an independent assessment of the risk significance of the event.

13. Assess the results of the charter items above to determine whether there were issues with quality assurance, radiological controls, security or safeguards, or safety culture components.

C. Guidance

The team will begin in-office inspection the week of January 23, 2012, and report to the site and conduct an entrance meeting on January 30, 2012. Inspection Procedure 93800, "Augmented Team Inspection" provides additional guidance to be used during the conduct of the inspection. Your duties will be as described in this procedure and should emphasize fact-finding in the review of the circumstances surrounding the event. It is not the responsibility of the team to examine the regulatory process. The team should notify Region IV management of any potential generic issues identified related to

this event for discussion with NRR. Safety or security concerns identified that are not directly related to the event should be reported to the Region IV office for appropriate action.

It is anticipated that the on-site portion of the inspection will be completed by February 9, 2012. You should provide a recommendation concerning when the onsite inspection should be concluded after you are on site.

An initial briefing of Region IV management will be provided on Tuesday, January 31, 2012, with daily briefings thereafter. In accordance with IP 93800, you should promptly recommend a change in inspection scope or escalation if information indicates that the assumptions used in the MD 8.3 risk analysis were incorrect.

A report documenting the results of the inspection should be issued within 30 days of the completion of the inspection. The report should address all applicable areas specified in Section 03.02 of Inspection Procedure 93800. At the completion of the inspection, you should provide recommendations for improving the Reactor Oversight Process baseline inspection procedures and Augmented Inspection process based on any lessons learned, as well as recommendations for generic communications.