ENERGYSOLUTIONS

30 November 2011
EL&P-044-11

Mr. Pierre Saverot
Licensing Branch
Division of Spent Fuel Storage and Transportation
Office of Nuclear Material Safety and Safeguards
U.S. Nuclear Regulatory Commission
Washington, DC 20555

SUBJECT: Amendment Request for Certificate of Compliance No. 9168 for the Model 8-120B Package - Request for Supplemental Information
Docket No. 71-9204
TAC No. L24514

Dear Mr. Saverot:

Energy*Solutions* provides the attached response to the request for additional information (RAI).
In addition to specific responses to the RAI items, EnergySolutions provides a revised SAR (Revision 1) incorporating the information provided in our response. Please replace the previously submitted, SAR Rev.0, with Rev. 1 attached to this letter.
Should you or members of your staff have any additional questions about the response, please contact me at (803) 758-1898.

Sincerely,

Mark Whittaker
Health Physicist, Radiological Services

Attachments:

- Response to RAI
- Part 71 Revision Table
- SAR Rev.1
- References, Documents, and Data (Proprietary and Non-proprietary, provided on CD/DVD)
- Proprietary Affidavit

NMSS01

140 Stoneridge Drive · Columbia, South Carolina 29210
803.256.0450 · www.energysolutions.com

SAFETY ANALYSIS REPORT

For

MODEL 8-120B TYPE B SHIPPING PACKAGING

CONSOLIDATED REVISION 1

November 2011

Submitted by:

ENERGYSOLUTIONS

140 Stoneridge Dr.
Columbia, S.C. 29210

TABLE OF CONTENTS

1.0 GENERAL INFORMATION

1.1 Introduction 1-1

1.2 Package Description 1-1

1.2.1 Packaging 1-1
1.2.2 Contents 1-4
1.2.3 Special Requirements for Plutonium 1-6
1.2.4 Operational Features 1-6

1.3 Appendix - CNS 10-160B Shipping Cask Drawing 1-7

2.0 STRUCTURAL EVALUATION 2-1

2.1 Description of Structural Design 2-1

2.1.1 Discussion 2-1
2.1.2 Design Criteria 2-2
2.1.3 Weight and Center of Gravity 2-3
2.1.4 Identification of Codes and Standards for Package Design 2-4

2.2 Materials 2-4

2.2.1 Material Properties and Specifications 2-4
2.2.2 Chemical Galvanic and Other Reactions 2-5
2.2.3 Effects of Radiation on Materials 2-5

2.3 Fabrications and Examination 2-6

2.3.1 Fabrication 2-6
2.3.2 Examination 2-6

2.4 General Requirements for All Packages 2-6

2.4.1 Minimum Packaging Size 2-6
2.4.2 Tamper-Indicating Features 2-6
2.4.3 Positive Closures 2-7

2.5 Lifting and Tie-Down Standards for All Packages 2-7

2.5.1 Lifting Devices 2-7
2.5.2 Tie-own Devices 2-18

2.6 Normal Conditions of Transport 2-23

2.6.1 Heat 2-24
2.6.2 Cold 2-24
2.6.3 Reduced External Pressure 2-26
2.6.4 Increased External Pressure 2-26

2.6.5 Vibration 2-26
2.6.6 Water Spray 2-26
2.6.7 Free Drop 2-27
2.6.8 Corner Drop 2-28
2.6.9 Compression 2-28
2.6.10 Penetration 2-28

2.7 Hypothetical Accident Condition 2-29

2.7.1 Free Drop 2-29
2.7.2 Crush 2-50
2.7.3 Puncture 2-50
2.7.4 Thermal 2-55
2.7.5 Immersion - Fissile Material 2-56
2.7.6 Immersion – All Packages 2-56
2.7.7 Deep Water Immersion Test 2-56
2.7.8 Summary of Damage 2-56

2.8 Accident Conditions for Air Transport of Plutonium 2-57

2.9 Accident Conditions for Fissile Material Packages for Air Transport 2-57

2.10 Special Form 2-57

2.11 Fuel Rods 2-57

2.12 Appendix 2-57

3.0 THERMAL EVALUATION 3-1

3.1 Description of Thermal Design 3-1

3.1.1 Design Features 3-1
3.1.2 Content's Decay Heat 3-1
3.1.3 Summary Tables of Temperatures 3-1
3.1.4 Summary Table of Maximum Pressures 3-1

3.2 Material Properties and Component Specifications 3-1

3.2.1 Material Properties 3-1
3.2.2 Component Specifications 3-2

3.3 Thermal Evaluation for Normal Conditions of Transport 3-2

3.3.1 Heat and Cold 3-2
3.3.2 Maximum Normal Operating Pressure 3-3
3.3.3 Thermal Stresses 3-4

3.4 Hypothetical Accident Thermal Evaluation 3-5

3.4.1 Initial Conditions 3-5
3.4.2 Fire Test Conditions 3-6

3.4.3 Maximum Temperatures and Pressure 3-6
3.4.4 Maximum Thermal Stresses 3-7
3.4.5 Accident Conditions for Fissile Packages for Air Transport 3-7

3.5 Appendix 3-7

3.5.1 List of References 3-7
3.5.2 Attachment 3A 3-8

4.0 CONTAINMENT 4-1

4.1 Description of Containment System 4-1

4.1.1 Containment Vessel 4-1
4.1.2 Containment Penetration 4-1
4.1.3 Welds and Seals 4.1
4.1.4 Closure 4-2

4.2 Containment Under Normal Conditions of Transport 4-3

4.2.1 Maximum Permitted Leak Rate 4-3
4.2.2 Containment Under Normal Conditions of Transport (Powdered Solids) 4-4
4.2.3 Containment Under Normal Conditions of Transport (Irradiated Hardware 4-7

4.3 Containment Under Hypothetical Accident Conditions of Transport (Type B Package) 4-9

4.3.1 Containment Under Hypothetical Accident Conditions (Powdered Solids) 4-9
4.3.2 Containment Under Hypothetical Accident Conditions (Irradiated Hardware) 4-11

4.4 Reference Air Leakage Rate 4-13

4.5 Determination of Equivalent Reference Leakage Rate for R-134a Gas 4-13

4.6 Determination of Equivalent Reference Leakage Rate for Helium Gas 4-18

4.7 Determining Time for Pre-Shipment Leak Test Using Air or Nitrogen 4-23

4.8 Periodic Verification Leak Rate Determination for Leaktight Status 4-26

4.9 References 4-27

Appendix 4-28

4.1 Properties of R-134a 4-28

5.0 SHIELDING EVALUATION 5-1

5.1 Description of Shielding Design 5-1

5.1.1 Shielding Design Features 5-1
5.1.2 Maximum Radiation Levels 5-1

5.2 Source Specification 5-3

5.2.1 Gamma Source 5-3
5.2.2 Neutron Source 5-3

5.3 Model Specification 5-4

5.3.1 Description of Radial and Axial Shielding Configuration 5-4
5.3.2 Material Properties 5-6

5.4 Shielding Evaluation 5-6

5.4.1 Methods 5-6
5.4.2 Input and Output Data 5-7
5.4.3 Flux to Dose Rate Conversion 5-7
5.4.4 External Radiation Levels 5-8

5.5 Gamma Activity Limits 5-11

5.6 Conclusion 5-14

5.7 References 5-14

6.0 CRITICALITY EVALUATION 6-1

7.0 OPERATING PROCEDURE 7-1

7.1 Loading the Packaging 7-1

7.2 Unloading the Package 7-4

7.3 Preparation of Empty Packaging for Transport 7-5

Attachment 1 7-7
Attachment 2 7-11

8.0 ACCEPTANCE TESTS AND MAINTENANCE PROGRAM 8-1

8.1 Acceptance Tests 8-1

8.1.1 Visual Inspections and Measurements 8-1
8.1.2 Weld Examinations 8-1
8.1.3 Structural and Pressure Tests 8-2
8.1.4 Leakage Tests 8-2
8.1.5 Component and Material Tests 8-3
8.1.6 Shielding Tests 8-3
8.1.7 Thermal Tests 8-3
8.1.8 Miscellaneous Tests 8-3

8.2 Maintenance Program 8-3

8.2.1 Structural and Pressure Tests 8-4
8.2.2 Leakage Tests 8-4
8.2.3 Component and Material Tests 8-8
8.2.4 Thermal Tests 8-8
8.2.5 Miscellaneous Tests 8-8

8.3 Appendices 8-8

8.3.1 Appendix 8-8

LIST OF TABLES

TABLE NO.	DESCRIPTION	PAGE
Table 2-1	Summary of Load Combinations for Normal and Accident Condition Loading	2-60
Table 2-2	Allowable Stresses	2-61
Table 2-3	Stress Component Definition	2-62
Table 2-4	Material Properties	2-63
Table 2-5	Stress Intensities in 8-120B Cask under Hot Environment Loading	2-64
Table 2-6	Stress Intensities in 8-120B Cask under Cold Environment Loading	2-65
Table 2-7	Nil Ductility Temperature Requirements for Fracture Critical Components of the 8-120B Cask	2-66
Table 2-8	Stress Intensities in 8-120B Cask under Reduced External Pressure	2-67
Table 2-9	Stress Intensities in 8-120B Cask under Increased External Pressure and Immersion	2-68
Table 2-10	Normal Condition Drop Test Summary	2-69
Table 2-11	Stress Intensities in 8-120B Cask under 1-ft End Drop – Hot Condition	2-70
Table 2-12	Stress Intensities in 8-120B Cask under 1-ft End Drop – Cold Condition	2-71
Table 2-13	Stress Intensities in 8-120B Cask under 1-ft Side Drop – Hot Condition	2-72
Table 2-14	Stress Intensities in 8-120B Cask under 1-ft Side Drop – Cold Condition	2-73
Table 2-15	Stress Intensities in 8-120B Cask under 1-ft Corner Drop – Hot Condition	2-74
Table 2-16	Stress Intensities in 8-120B Cask under 1-ft Corner Drop – Cold Condition	2-75
Table 2-17	Hypothetical Accident Condition Drop Test Summary	2-76
Table 2-18	Stress Intensities in 8-120B Cask under 30-ft End Drop – Hot Condition	2-77
Table 2-19	Stress Intensities in 8-120B Cask under 30-ft End Drop – Cold Condition	2-78
Table 2-20	Stress Intensities in 8-120B Cask under 30-ft Side Drop – Hot Condition	2-79
Table 2-21	Stress Intensities in 8-120B Cask under 30-ft Side Drop – Cold Condition	2-80
Table 2-22	Stress Intensities in 8-120B Cask under 30-ft Corner Drop – Hot Condition	2-81
Table 2-23	Stress Intensities in 8-120B Cask under 30-ft Corner Drop – Cold Condition	2-82
Table 2-24	Maximum Impact Limiter Attachment Force during Various HAC Drop Tests	2-83
Table 2-25	Maximum Stress Intensities in 8-120B Cask HAC Fire	2-84
Table 3-1	Summary of Maximum NCT Temperatures	3-9
Table 3-2	Summary of Maximum HAC Fire Temperatures	3-10
Table 3-3	Summary of Maximum Pressures During NCT and HAC Fire Test	3-11
Table 3-4	Temperature-Independent Metal Thermal Properties	3-11
Table 3-5	Temperature-Dependent Metal Thermal Properties	3-12
Table 3-6	Temperature-Dependent Air Thermal Properties	3-13
Table 4.1	Containment Boundary Closure Torque Requirements	4-2

Table 4.2 Leakage Tests of the 8-120B Package 4-26
Table 5.1 Summary of Maximum Dose Rates 5-2
Table 5.2 Photon Energy and Intensity 5-3
Table 5.3 Material Composition and Density 5-6
Table 5.4 Gamma-Ray-Flux-To-Dose-Rate Conversion Factors 5-7
Table 5.5a Co-60 Point Source NCT and HAC Cask Dose Rates 5-9
Table 5.5b Cs-137 Point Source NCT and HAC Cask Dose Rates 5-10
Table 8.1 Periodic Leak Test of 8-120B 8-6
Table 8.2 Pre-Shipment Leak Test of 8-120B Components 8-7

LIST OF FIGURES

FIG. NO.	DESCRIPTION	PAGE
Figure 1-1	8-120B General Arrangement	1-2
Figure 2-1	Nomenclature of Components	2-85
Figure 2-2	Containment Boundary	2-86
Figure 2-3	Polyurethane Foam Stress-Strain Properties Parallel to Rise Direction	2-87
Figure 2-4	Polyurethane Foam Stress-Strain Properties Perpendicular to Rise Direction	2-88
Figure 2-5	Lifting Ear Free Body Diagram	2-89
Figure 2-6	Lifting Ear Details	2-90
Figure 2-7	Primary/Secondary Lid Lifting Lug Orientation	2-91
Figure 2-8	Freebody Diagram of Lid Lifting Lug	2-92
Figure 2-9	Lifting Lug Eye Tearout Area	2-93
Figure 2-10	Lifting Lug Net Tensile Area	2-94
Figure 2-11	Cask Tie Down Arm	2-95
Figure 2-12	Tie Down Arm Geometry	2-96
Figure 2-13	Tie Down Free Body Diagram	2-97
Figure 2-14	Tie Down Arm Details	2-98
Figure 2-15	FEM of 8-120B Cask Outer Shell & Tie-Down Arm	2-99
Figure 2-16	8-120B Cask Outer Shell Maximum Principal Stress	2-100
Figure 2-17	8-120B Cask Tie-Down Arm Maximum Stress Intensity	2-101
Figure 2-18	The finite element model used in the analyses	2-102
Figure 2-19	Temperature Distribution - Hot Environment Loading	2-103
Figure 2-20	Stress Intensity Contour Plot - Hot Environment Loading	2-104
Figure 2-21	Temperature Distribution - Cold Environment Loading	2-105
Figure 2-22	Stress Intensity Contour Plot - Cold Environment Loading	2-106
Figure 2-23	Fracture Critical Cask Components	2-107
Figure 2-24	Design Chart for Category II Fracture Critical Components	2-108
Figure 2-25	Stress Intensity Contour Plot - Reduced External Pressure Loading	2-109
Figure 2-26	Stress Intensity Contour Plot- Increased External Pressure and Immersion Loading	2-110
Figure 2-27	LS-DYNA Model of the 8-120B Cask & Rigid Pad	2-111
Figure 2-28	The finite element model for the drop tests	2-112
Figure 2-29	End Drop – The cask axis parallel to the drop direction	2-113
Figure 2-30	Side Drop – The cask axis perpendicular to the drop direction	2-114
Figure 2-31	Corner Drop – The C.G. of the cask directly over the impact point	2-115
Figure 2-32	Time-History Result, 1-Ft End Drop, Cold Condition (Resultant Force Plot)	2-116

Figure 2-33 Time-History Result, 1-Ft End Drop, Cold Condition (Energy Plots) 2-117
Figure 2-34 Finite Element Model of the 8-120B Cask Identifying the Cask Components with Material Numbers 2-118
Figure 2-35 The finite element grid of the lid, seal plate, bolts, and the cask 2-119
Figure 2-36 The finite element grid of the cask body without the lead 2-120
Figure 2-37 Load Distribution on the Model During End Drop 2-121
Figure 2-38 Stress Intensity Plot – 30-ft End Drop – Hot Condition 2-122
Figure 2-39 Stress Intensity Plot – 30-ft End Drop – Cold Condition (Max. Heat Load) 2-123
Figure 2-40 Stress Intensity Plot – 30-ft End Drop – Cold Condition (No Heat Load) 2-124
Figure 2-41 Load Distribution on the Model During Side Drop 2-125
Figure 2-42 Stress Intensity Plot – 30-ft Side Drop – Hot Condition 2-126
Figure 2-43 Stress Intensity Plot – 30-ft Side Drop – Cold Condition (Max. Heat Load) 2-127
Figure 2-44 Stress Intensity Plot – 30-ft Side Drop – Cold Condition (No Heat Load) 2-128
Figure 2-45 Load Distribution on the Model During Corner Drop 2-129
Figure 2-46 Stress Intensity Plot – 30-ft Corner Drop – Hot Condition 2-130
Figure 2-47 Stress Intensity Plot – 30-ft Corner Drop – Cold Condition (Max. Heat Load) 2-131
Figure 2-48 Stress Intensity Plot – 30-ft Corner Drop – Cold Condition (No Heat Load) 2-132
Figure 2-49 Cask oriented for oblique drop 2-133
Figure 2-50 Lead-Slump during the 30-ft End Drop Test 2-134
Figure 3-1 8-120B Cask Design Features Important to Thermal Performance 3-14
Figure 3-2 Finite Element Model of the 8-120B Cask Used for the Thermal Analyses 3-15
Figure 3-3 Materials Used in the Finite Element Model 3-16
Figure 3-4 Temperature Distribution – Hot Environment 3-17
Figure 3-5 Temperature Distribution – Cold Environment 3-18
Figure 3-6 Temperature Distribution – Normal Hot 3-19
Figure 3-7 Temperature Distribution – Normal Cold 3-20
Figure 3-8 Temperature Distribution in the Cask Cavity – Hot Environment 3-21
Figure 3-9 HAC Fire Analysis Load Steps and Boundary Conditions 3-22
Figure 3-10 Identification of the Nodes where Time-History is Monitored 3-23
Figure 3-11 Temperature Time-History Plot in Various Components of the Cask 3-24
Figure 3-12 Temperature Time-History Plot in Various Components of the Cask (Not Under Direct Contact with the Fire) 3-25
Figure 3-13 Temperature Distribution – 7,500 Sec. After the Start of the Fire 3-26
Figure 3-14 Temperature Distribution in the Cask Cavity – 55,465.7 Sec After the Start of the Fire (From 2-d Model) 3-27
Figure 3-15 Temperature Distribution in the Cask with Puncture Drop Damage – 7,500 Sec. After the Start of the Fire (From the 2-d Model) 3-28

Figure 4.1 Allowable R-134a/Air Mixture Test Leakage, cm^3/sec, Versus Test Temperature, °F 4-15
Figure 4.2 Allowable R-134a Test Leakage, cm^3/sec, Versus Test Temperature, °F.....4-16
Figure 4.3 Allowable R-134a Test Leakage, oz/yr, Versus Test Temperature, °F.....4-17
Figure 4.4 Allowable R-134a Test Leakage Sensitivity, oz/y7r, Versus Test Temperature, °F.....4-18
Figure 4.5 Allowable He/Air Mixture Test Leakage, cm^3/sec, Versus Test Temperature, °F.....4-20
Figure 4.6 Allowable He Test Leakage,cm^3/sec, Versus Test Temperature, °F.....4-21
Figure 4.7 Allowable He Test Leakage Sensitivity, cm^3/sec, Versus Test Temperature, °F.....4-22
Figure 5.1 Cask Model.....5-5
Figure 5.2 HAC Cask Model.....5-6

1.0 General Information

1.1 Introduction

This Safety Analysis Report describes a reusable shipping package designed to protect radioactive material from both normal conditions of transport and hypothetical accident conditions. The package is designated the Model 8-120B package.

1.2 Package Description

1.2.1 Packaging

The package consists of a steel and lead cylindrical shipping cask with a pair of cylindrical foam-filled impact limiters installed on each end. The package configuration is shown in Figure 1.2-1. The internal cavity dimensions are 61 $\frac{13}{16}$ inches in diameter and 75 inches high. The cylindrical cask body is comprised of a 1½ inch thick external steel shell and a ¾ inch internal steel shell. The annular space between the shells is filled with 3.35 inch thick lead. The base of the cask consists of two 3¼ inch thick flat circular steel plates. The cask lid consists of two 3¼ inch thick flat circular steel plates. The lid is fastened to the cask body with twenty 2-8 UN bolts. There is a secondary lid in the middle of the primary lid. This secondary lid is attached to the primary lid with twelve 2-8 UN bolts.

The impact limiters are 102 inches in outside diameter and extend 22 inches beyond each end of the cask. There is a 50.0 inch diameter void at each end. Each impact limiter has an external shell, fabricated from ductile low carbon steel, which allows it to withstand large plastic deformations without fracturing. The volume inside the shell is filled with a crushable shock and thermal insulating polyurethane foam. The polyurethane is sprayed into the shell and allowed to expand until the void is completely filled. The foam bonds to the shell, which creates a unitized construction for the impact limiters.

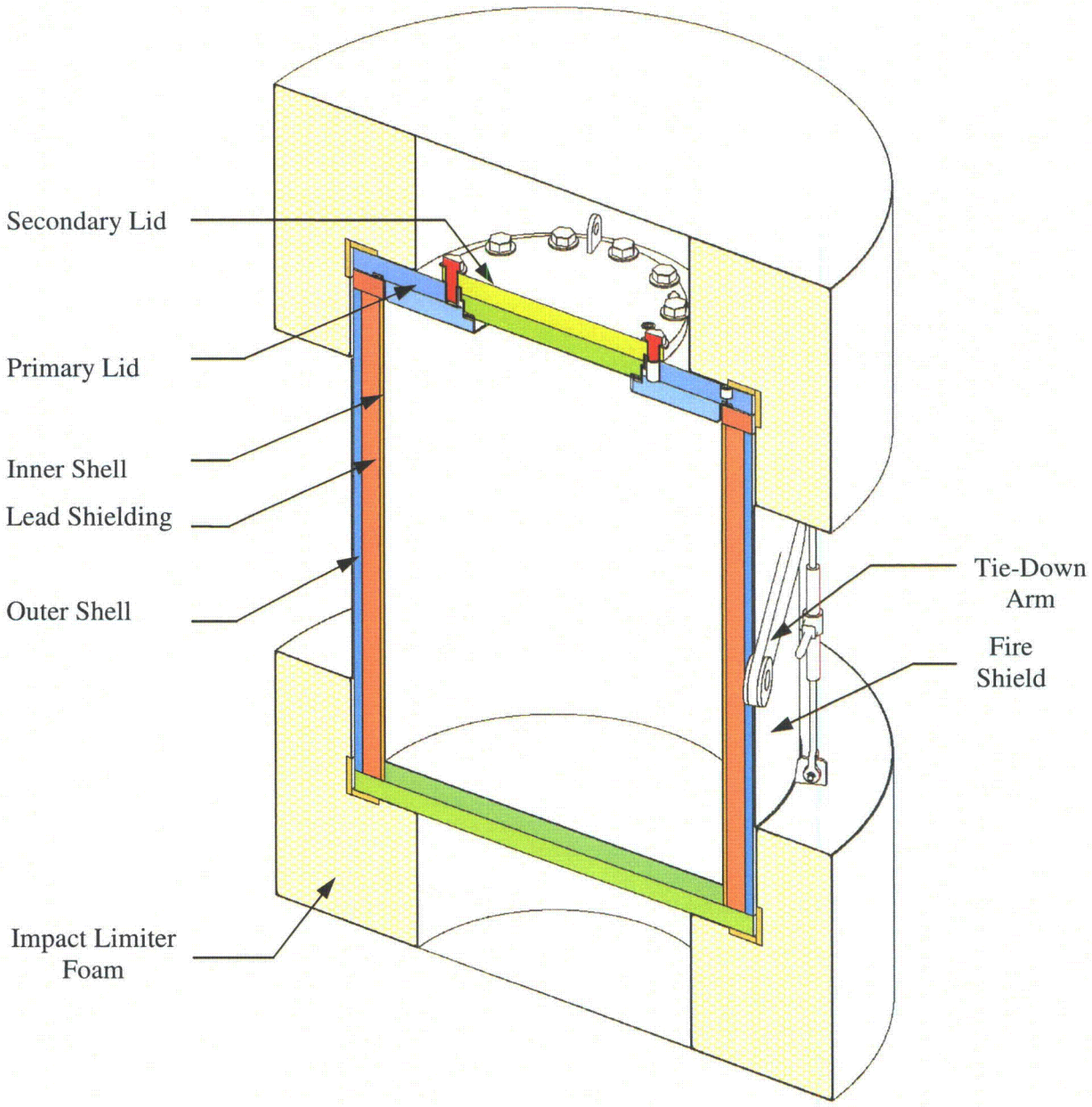

Figure 1-1
Features of the 8-120B Cask

The properties of the foam are further described in Section 2.2. The top and bottom impact limiters are connected together by eight one-inch diameter ratchet binders. This serves to hold the impact limiters in place on the cask during shipment, while allowing easy removal of the impact limiters for loading and unloading operations.

A general arrangement drawing of the package is included in Appendix 1.3. It shows the package dimensions as well as all materials of construction.

1.2.1.1 Containment Vessel

The containment vessel is defined as the inner steel shell of the cask body together with closure features comprised of the lower surface of the cask lid and 20 equally spaced 2-8 UN closure bolts.

1.2.1.2 Neutron Absorbers

There are no materials used as neutron absorbers or moderators in the package.

1.2.1.3 Package Weight

Maximum gross weight for the package is 74,000 lbs. including a maximum payload weight of 14,680 lbs.

1.2.1.4 Receptacles

There are no receptacles on this package.

1.2.1.5 Vent, and Test Ports

Pressure test ports with manual venting features exist between the twin o-ring seals for both the primary and secondary lids. This facilitates leak testing the package in accordance with ANSI N14.5.

The vent port is provided with the same venting features for venting pressures within the containment cavity, which may be generated during transport, prior to lid removal. Each port is sealed with an elastomer gasket. Specification information for all seals and gaskets is contained in Chapter 4.

1.2.1.6 Lifting Devices

Lifting devices are a structural part of the package. From the General Arrangement Drawing shown in Appendix 1.3, it can be seen that two removable lifting ears are provided, which attach to the cylindrical cask body. Three lifting lugs are also provided for removal and handling of the lid. Similarly, three lugs are provided for removal and handling of the secondary lid. Refer to Section 2.5.1 for a detailed analysis of the structural integrity of the lifting devices.

1.2.1.7 Tie-downs

From the General Arrangement Drawing, shown in Appendix 1.3, it can be seen that the tie-down arms are an integral part of the external cask shell. Consequently, tie-down arms are considered a structural part of the package. Refer to Section 2.5.2 for a detailed analysis of the structural integrity of the tie-down arms.

1.2.1.8 Heat Dissipation

There are no special devices used for the transfer or dissipation of heat.

1.2.1.9 Coolants

There are no coolants involved.

1.2.1.10 Protrusions

There are no outer or inner protrusions except for the tie-down arms described above. Lifting lugs are removed prior to transport.

1.2.1.11 Shielding

Cask walls provide a shield thickness of 3.35 inches of lead and 2¼ inches of steel. Cask ends provide a minimum of 6½ inches of steel. The contents will be limited such that the radiological shielding provided (4½ inches lead equivalent) will assure compliance with DOT and IAEA regulatory requirements.

1.2.1.12 Configurations

There are three configurations of the 8-120B cask.

- Configurations 1 and 2 were fabricated per the previously approved drawing Rev. 13 and differ mainly in the

inclusion (Configuration 1) or lack (Configuration 2) of the optional drain port. Configuration 1 now includes sealing the drain port with the insertion and welding of a rod in the drain port. Acceptance Testing of Configurations 1 and 2 are described in Section 8.1. Fabrication of Configurations 1 or 2 after April 1, 1999 are not permitted.

- Configuration 3 does not have a drain port and the base plate is fabricated differently than Configurations 1 and 2. Acceptance Testing of Configuration 3 is described in Section 8.2.
- Configurations 1, 2 and 3 have the same Operations and Maintenance requirements and are described in Sections 7.0 and 8.3 respectively

All configurations have the same structural, thermal, containment, shielding, and criticality evaluations.

1.2.2 Contents of Packaging

1.2.2.1 Type form of material:

(1) Byproduct, source, or special nuclear material, in the form of dewatered resins, solids, including powdered or dispersible solids, or solidified material, contained within secondary container(s); or
(2) Radioactive material in the form of neutron activated metals or metal oxides in solid form contained within secondary container(s).

1.2.2.2 Maximum quantity of material per package:

Type B quantity of radioactive material not to exceed $3000A_2$, 200 thermal watts, and 14,680 pounds including weight of the contents, secondary container(s) and shoring. The contents may include fissile materials provided at least one of the paragraphs (a) through (f) of 10 CFR 71.15 is met. Materials producing neutrons through α, n or γ,n reactions or through spontaneous fission are not authorized.

The activity of gamma emitting radionuclides shall not exceed the limit determined per the procedure in Chapter 7 Attachment 1. Powdered or dispersible solid radioactive materials must have a mass of at least 60 grams or a specific activity of 50 A_2/g or less.

1.2.2.3 Loading Restrictions

Contents shall be packaged in secondary containers. Except for close fitting contents, shoring must be placed between the secondary containers or activated components and the cask cavity to prevent movement during accident conditions of transport.

Explosives, non-radioactive pyrophorics, and corrosives (pH less than 2 or greater than 12.5), are prohibited. Pyrophoric radionuclides may be present only in residual amounts less than 1 weight percent. Materials that may auto-ignite or change phase (i.e., change from solid to liquid or gas) at temperatures less than 350°F, not including water, shall not be included in the contents. In addition, as required by 10 CFR 71.43 (d), the contents shall not include any materials that may cause any significant chemical, galvanic, or other reaction.

Powdered solids shipments shall be performed only when the most recent periodic leak test meets the requirements of Chapter 4, Section 4.8. Powdered solid radioactive material shall not include radioactive forms of combustible metal hydrides, combustible elemental metals, i.e., magnesium, titanium, sodium, potassium, lithium, zirconium, hafnium, calcium, zinc, plutonium, uranium, and thorium, or combustible non-metals, i.e., phosphorus.

For any package containing water and/or organic substances which could radiolytically generate combustible gases, a determination must be made that , over a period of time that is twice the expected shipping time, the hydrogen generated must be limited to a molar quantity that would be no more than 5% by volume (or equivalent limits for other inflammable gases) of the secondary container gas void if present at STP (i.e., no more than 0.063 g-moles/ft^3 at 14.7 psia and 70°F).
The determination of hydrogen generation will be made using the methods in NUREG/CR-6673, *Hydrogen Generation in TRU Waste Transportation Packages*. NUREG/CR-6673 has equations that allow prediction of the hydrogen concentration as a function of time for simple nested enclosures and for packages containing multiple contents packaged within multiple nested confinement layers. The inputs to these equations include the bounding effective $G(H_2)$-value for the contents, the $G(H_2)$-values for the packaging material(s), the void volume in the containment vessel and in the confinement layers (when applicable), the temperature when the package was sealed, the temperature of the package during transport, and the contents decay heat.

For any package delivered to a carrier for transport, the secondary container must be prepared for shipment in the same manner in which the determination for gas generation is made. Shipment period begins when the package is prepared (sealed) and must be completed within twice the expected shipping time.

For any package containing materials with radioactivity concentration not exceeding that for LSA and shipped within 10 days of preparation, or within 10 days of venting the secondary container, the gas generation determination above need not be made and the shipping time restriction does not apply.

1.2.3 Special Requirements For Plutonium

Any contents that contain more than 0.74 TBq (20 Ci) of plutonium must be in solid form.

1.2.4 Operational Features

Refer to the General Arrangement Drawing of the package in Appendix 1.3. There are no complex operational requirements associated with the package

1.3 APPENDIX

CNS 8-120B Shipping Cask Drawing

Withheld from public disclosure as security-related sensitive information

SECURITY – RELATED INFORMATION
WITHHOLD UNDER 10CFR 2.390

FIGURE WITHHELD UNDER 10 CFR 2.390

PROPRIETARY ☒ NON-PROPRIETARY	FSCM No. 54643	ENERGYSOLUTIONS
	DO NOT SCALE PRINT DIMENSIONS ARE IN INCHES UNLESS NOTED	
SHEET 1	CAD FILE No. 16500116 REVISIONS OF ORIGINAL (REV. 0)	8-120B SHIPPING CASK
	DRAWN BY P. PREVATTE 01/26/11 CHECKED BY M. AHEARN 01/26/11 ENGINEER P. PAQUIN 01/26/11	SIZE B DRAWING NUMBER C-110-E-0007 REV. 16 SCALE 1:0 SEC. N/A SHEET 1 OF 6

SECURITY – RELATED INFORMATION
WITHHOLD UNDER 10CFR 2.390

FIGURE WITHHELD UNDER 10 CFR 2.390

PROPRIETARY
X NON-PROPRIETARY

SHEET 2

FSCM No. 54643

DO NOT SCALE PRINT

DWG FILE No. 16500215

REVIEWERS OF ORIGINAL (DEV. 0)

DRAWN BY P. PREWITTE

CHECKED BY M. AHEARN

P. PAQUIN

ENERGYSOLUTIONS

8-120B
SHIPPING CASK

SIZE D

DRAWING NUMBER C-110-E-0007

REV. 16

SECURITY – RELATED INFORMATION
WITHHOLD UNDER 10CFR 2.390

FIGURE WITHHELD UNDER 10 CFR 2.390

PROPRIETARY / NON-PROPRIETARY	FSCM No. 54843	ENERGYSOLUTIONS
	DO NOT SCALE PRINT (DIMENSIONS ARE IN INCHES UNLESS NOTED)	
SHEET 3	DID FILE No. 16500316	8-120B SHIPPING CASK
	REVISIONS OF ORIGINAL (REV. 0)	
	DRAWN BY P. PREVATTE 07/29/11	
	CHECKED BY M. AHEARN 07/29/11	SIZE B — C-110-E-0007 — REV 16
	CHECKED P. PAQUIN 07/29/11	SCALE 1:3 — SHT. 3 / 4 — SHEET 3 OF 3

SECURITY – RELATED INFORMATION
WITHHOLD UNDER 10CFR 2.390

FIGURE WITHHELD UNDER 10 CFR 2.390

PROPRIETARY ☒ NON-PROPRIETARY	FSCM No. 54643	ENERGYSOLUTIONS
	DO NOT SCALE PRINT DIMENSIONS ARE IN INCHES UNLESS NOTED	
SHEET 4	CAD FILE No. 16500416 REVISIONS OF ORIGINAL (REV. 0)	8-120B SHIPPING CASK
	DRAWN BY P. PREVATTE 07/26/11 CHECKED BY M. AHEARN 07/26/11 APPROVED P. PAQUIN 07/26/11	REV B DRAWING NUMBER C-110-E-0007 REV 16 SCALE 1:4 WT. n/a SHEET 4 OF 4

SECURITY – RELATED INFORMATION
WITHHOLD UNDER 10CFR 2.390

FIGURE WITHHELD UNDER 10 CFR 2.390

PROPRIETARY ☒ NON-PROPRIETARY	FSCM No. 54643	ENERGYSOLUTIONS
	DO NOT SCALE PRINT DIMENSIONS ARE IN INCHES UNLESS NOTED	8-120B SHIPPING CASK
SHEET 5	CAD FILE No. 16500516 REVISIONS OF ORIGINAL (REV. 0)	
	DRAWN BY P. PREWATTE 10/13/11	
	CHECKED BY M. AHEARN 10/13/11	SIZE B — DRAWING NUMBER C-110-E-0007 — REV. 16
	CHANGED P. PAQUIN 10/13/11	SCALE 1:4 — WT. 6/6 — SHEET 5 OF 5

SECURITY – RELATED INFORMATION
WITHHOLD UNDER 10CFR 2.390

FIGURE WITHHELD UNDER 10 CFR 2.390

PROPRIETARY / NON-PROPRIETARY	FSCM No. 54643	ENERGYSOLUTIONS
	DO NOT SCALE PRINT	
SHEET 6	UNIS FILE No. 18500516	8-120B SHIPPING CASK
	REMOVED OF ORIGINAL (REV. 0)	
	DRAWN BY P. PREVATTE 05/16/11	
	CHECKED BY M. ROSINSKI 05/17/11	B C-110-E-0007 16
	ENGINEER P. PAQUIN 05/17/11	

2.0 STRUCTURAL EVALUATION

This Section identifies, describes, discusses and analyzes the structural design of the 8-120B packaging components, and safety systems for compliance with performance requirements of 10 CFR 71 (Reference 2-1).

2.1 DESCRIPTION OF STRUCTURAL DESIGN

The package has been designed to provide a shielded containment vessel that can withstand the loading due to the Normal Conditions of Transport, as well as those associated with the Hypothetical Accident Conditions.

The 8-120B package is designed to protect the payload from the following conditions: Transport environment, 30-foot drop test, 40-inch puncture test, 1475°F thermal exposure, and transfer or dissipation of any internally generated heat. The design of the package satisfies these requirements.

Principal elements of the system consist of:

- Containment Boundary
- Lead Shielding
- Impact Limiters

These components are identified in the drawings of Appendix 1.3. The design and function of these components in meeting the requirements of 10 CFR 71 is discussed below.

Figure 2-1 shows the nomenclature of the components of the cask used throughout this SAR.

2.1.1 Discussion

Containment Boundary

The containment boundary of the package is made up of the cask body and the lid. They are fabricated of ASTM A516, Grade 70 steel. The cask body consists of two shells, which envelop a lead shield. The top end of the cask body consists of a bolting ring that provides sealing and bolting surfaces for the lid. The bottom end of the cask body consists of two baseplates. A removable primary lid is attached to the cask body with twenty (20) equally spaced 2"– 8UN bolts. A secondary lid is centered and attached to the primary lid with twelve (12) equally spaced 2"– 8UN bolts. The lid-to-cask body and lid-to-lid joints are each sealed by pairs of solid elastomeric O-rings. The cask containment boundary consists of the inner shell, the outer baseplate, the bolting ring, the inner O-ring, and the lids. This boundary is penetrated by the vent port. Thus, the parts of this port up to the stat-o-seal are also considered to be on the containment boundary. Figure 2-2 shows the containment boundary of the package.

Shielding

The space between the two shells, discussed above, is filled with lead. This lead shielding is subjected to a gamma scan inspection to assure lead integrity. The designed thickness assures that no biological hazard is presented by the package and all shielding requirements of 10 CFR 71 are met.

Impact Limiters

The impact limiters are designed to protect the package from damage during the HAC drop test and to provide thermal protection during the hypothetical fire accident condition.

They are constructed of fully welded steel shells filled with foamed-in-place closed-cell rigid polyurethane foam. The foam deforms and provides energy absorption during impact. Eight circumferentially located attachment points are provided to interconnect the two impact limiters.

Detailed discussions of all components and materials utilized in the 8-120B Package including stress, thermal, and pressure calculations are contained in the applicable sections of this SAR.

2.1.2 Design Criteria

The package is designed to satisfy the requirements of 10 CFR 71.71 under the normal conditions of transport (NCT) and hypothetical accident conditions (HAC). Compliance with the "General Standards for All Packages" specified in 10 CFR 71.43 and the "Lifting and Tie-Down Standards" specified in 10 CFR 71.45 are discussed in Section 2.4 and 2.5 respectively. Table 2-1 summarizes the NCT and HAC loading and their combination with various initial conditions, used for the design assessment of the 8-120B package. Table 2-1 has been developed from the recommendations of Regulatory Guide 7.8 (Reference 2-2).

The allowable stresses in the package containment boundary (other than bolting) are based on the criteria of Regulatory Guide 7.6 (Reference 2-3).

The allowable stresses under normal conditions (RG 7.6, Regulatory Position 2) are:

Primary membrane stresses < S_m
Primary membrane + bending stresses < 1.5 S_m

Where, S_m = design stress intensity

Based on ASME Code (Reference 2-4), Section II, Appendix 1, Article 1-100, the design stress intensity is defined to be:

S_m = smaller of (2/3 S_y or S_u/3.5)

Where, S_y = material yield stress

S_u = material ultimate strength

The allowable stresses under hypothetical accident conditions (RG 7.6, Regulatory Position 5), are:

Primary membrane stresses < smaller of (2.4 S_m or 0.7 S_u)
Primary membrane + bending stresses < smaller of (3.6 S_m or S_u)

Regulatory Guide 7.6 does not provide guidance for the bolting allowable stress limits. The allowable stress in the bolting for the NCT loading is established to be similar to that for the non-bolting components. For the HAC conditions it is established based on the requirements of ASME B&PV Code, Section III, Appendix F, Article F-1335.

For HAC loading, average tensile stress in the bolts shall not exceed smaller of 0.7 S_u or S_y. The direct tension plus bending, excluding stress concentration shall not exceed S_u. The average bolt shear stress shall not exceed the smaller of 0.42 S_u or 0.6 S_y. The combined tensile and shear stress to corresponding allowable stress ratio shall satisfy the following equation:

$$\left(\frac{f_t}{F_{tb}}\right)^2 + \left(\frac{f_v}{F_{vb}}\right)^2 \leq 1.0$$

Where,
f_t = computed tensile stress
f_v = computed shear stress
F_{tb} = allowable tensile stress
F_{vb} = allowable shear stress

Table 2-2 lists the allowable stresses for various stress components under NCT and HAC loading conditions. Allowable values for all the materials that are used for the construction of the structural components of the cask are listed in this table. It should be noted that the allowable stress values listed in this table are applicable to elastically calculated stresses only.

Table 2-3 lists the definition of the regulatory and/or the ASME code definition of stress components. This table also explains how these definitions have been incorporated into the 8-120B Cask analyses documented in this SAR.

The acceptance criterion for prevention of buckling is based on the criteria detailed in Section 2.7.1.7. Factors of safety of 2.0 for the normal conditions of transport and 1.34 for hypothetical accident conditions have been used in the buckling evaluation of the cask.

The primary structural components of the package are fabricated with ASTM A516, Grade 70 with supplemental nil ductility temperature (NDT) requirements. Fracture toughness requirements specified in Regulatory Guide 7.11 (Reference 2-6), "Fracture Toughness Criteria for Ferritic Steel Shipping Casks Containment Vessels with a Maximum Wall Thickness of Four Inches", (June 1991) and NUREG/CR-1815, "Recommendations for Protecting Against Failure by Brittle Fracture in Ferritic Steel Shipping Containers up to Four Inches Thick" (August 1981) (Reference 2-18) are both complied with. Section 2.6.2 evaluates the critical components of the cask.

The design criteria, used for the evaluation of the impact limiters, is based on a proprietary methodology developed by Energy*Solutions* and is fully documented in Energy*Solutions* proprietary document ST-551 (Reference 2-5).

2.1.3 Weight and Center of Gravity

The following is a conservative estimate of the weight of various components of the 8-120B package.

Cask Body	=	42,220 lb	
Lid	=	7,080 lb	
Payload	=	14,680 lb	
Impact Limiters (2)	=	4,860 lb	(each)
Misc	=	300 lb	
Package	=	74,000 lb	

The C.G. of the package is located at approximately the same location as the geometric center of the package.

2.1.4 Identification of Codes and Standards for Package Design

The 8-120B package is designed as a Type-B, Category II package per U.S. NRC Regulatory Guide 7.11 (Reference 2-6). Based on the recommendations of NUREG/CR-3854 (Reference 2-7), the fabrication, examination, and inspection of the containment boundary components of a Category II package should be per ASME B&PV Code Section III, Subsection ND.

2.2 MATERIALS

The material properties of the cask components used in the analysis of the 8-120B package are provided in Table 2-4. This table provides the temperature dependent yield stress, ultimate tensile strength, allowable membrane stress, Young's modulus, and mean coefficient of thermal expansion for stainless steel, carbon steel and lead. The thermal properties of these materials that were used for the evaluation of temperature distribution in the cask are provided in Section 3.2.1.

2.2.1 Material Properties and Specifications

All the components of the cask body are specified to be ASTM A516 Grade 70 steel, except for the seal rings that are specified to be ASTM A-240 Type 304L stainless steel. These materials are approved for the construction of the ASME Section III, Subsection ND vessels. The material properties for these materials have been obtained from the ASME Code.

The bolting used for connecting the primary lid to the cask body and the secondary lid to primary lid has been specified to be ASTM A-354 Gr. BD material. This material is approved for use in the ASME Section III, Subsection ND vessels. The material properties for this material have been obtained from the ASME Code.

The poured in place lead shielding is specified to be ASTM B-29 lead. This material has been used in numerous radioactive shipping casks over the last 30 years. The material properties for lead are obtained from NUREG/CR-0481 (Reference 2-8).

Various seals, used in the cask for maintaining the internal pressure, are specified to be elastomer O-rings. The lid and vent o-ring seals are an elastomer, have a durometer of 50-70, and have a usable temperature range that meets or exceeds the range required to meet the Normal Conditions of Transport (elastomer long-term temperature criterion: minimum = -40°F, maximum = +250°F) and meets or exceeds the temperature required to meet the Hypothetical Accident Conditions (elastomer temperature criterion: +350°F for 1 hour). Elastomers that have been evaluated and meet the criteria listed above are butyl rubber, ethylene propylene rubber, and silicone rubber. Seals with these specifications have been successfully used in similar packages over the last 30 years.

The impact limiters are filled with closed-cell rigid polyurethane foam. The foam is procured based on Energy*Solutions* specification ES-M-175 (see Appendix 1, Section 8), which specifies, among other things, the mechanical properties, flame retardant characteristics, and the test requirements for the foam material. The type of foam specified by the specification is General Plastics Manufacturing Company's Type FR-3700 or FR-6700, or equivalent. The General Plastics Technical Manual (Reference 2-9) provides the stress-strain properties of various density foams. The ES specification uses the 25 lb/ft^3 nominal density foam's stress-strain properties perpendicular-to-rise direction as the required property. However, in the analyses of the impact limiters both parallel-to-rise and perpendicular-to-rise direction properties have been used, as appropriate. These properties are shown in Figures 2-3 and 2-4.

2.2.2 Chemical Galvanic and Other Reactions

The 8-120B cask is fabricated from carbon steel, stainless steel and lead and has impact limiters containing polyurethane foam. These materials will not cause chemical, galvanic, or other reactions in air or water environments. These materials are commonly used in radioactive material (RAM) packages for transport of radioactive wastes and have been so used for many years without incident. The materials of construction were specifically selected to ensure the integrity of the package will not be compromised by any chemical, galvanic or other reactions.

2.2.2.1 Materials of Construction

The 8-120B package is primarily constructed of ASTM A516 Grade 70 steel with the tie-down arms and lifting ears made from ASTM A514 or A517 steel. This material is painted and is corrosion-resistant to most environments. The weld material and processes have been selected in accordance with the ASME Boiler and Pressure Vessel Code to provide as good or better material properties than the base material. The polyurethane foam in the impact limiters is closed-cell foam that is very low in free halogens. The foam material is sealed inside a dry cavity in each impact limiter, to prevent exposure to the elements. Even if moisture were available for leaching trace chlorides from the foam, very little chloride would be available, since the material is closed-cell foam and water does not penetrate the material to allow significant leaching. The solid elastomeric O-ring seals contain no corrosive material that would adversely affect the packaging.

2.2.2.2 Materials of Construction and Payload Compatibility

The typical contents of the 8-120B will be similar to the primary materials of construction, i.e., carbon steel, contained in a secondary container typically made of carbon steel. Corrosive materials are prohibited from the payloads. The steel contents of the cask will not react with the cask materials of construction. Water will not react with the painted steel cask body.

2.2.3 Effects of Radiation on Materials

The material from which the package is fabricated (carbon steel, stainless steel, lead, solid elastomeric O-ring and foam) along with the contents exhibit no measurable degradation of their mechanical properties under a radiation field produced by the contained radioactivity. Polyurethane and silicone can absorb more than 10^8 rads without damage (see Reference 2-9). The maximum dose to the silicone seal is less than 4×10^5 rad/yr and to the impact limiter is less than 3×10^3 rad/yr. Over the lifetime of these components, the absorbed dose will not result in damage.

2.3 FABRICATION AND EXAMINATION

As discussed in Section 2.1.4, the 8-120B packaging is designed as a Category II container. To assure the fabrication and examination processes used for the package (e.g. material procurement and control, fitting, welding, lead pouring, foaming, examining, testing, personnel qualification, etc.) are appropriately controlled, Energy*Solutions* will apply its USNRC approved 10 CFR 71 Subpart H Quality Assurance Program, which implements a graded approach to quality based on a component's or material's importance to safety consistent with the guidance provided in NUREG/CR-6407 (Reference 2-22), NUREG/CR-3854 (Reference 2-7), NUREG/CR-3019 (Reference 2-10) and Industry practice.

2.3.1 Fabrication

As specified in the above referenced documents, fabrication of the 8-120B containment components will be based on ASME B&PV Code, Section III, Subsection ND and that of the non-containment components will be based on ASME B&PV Code, Section III, Subsection NF.

2.3.2 Examination

As specified in the above referenced documents, examination of the 8-120B containment components will be based on ASME B&PV Code, Section III, Subsection ND-5000 and that of the non-containment components will be based on ASME B&PV Code, Section III, Subsection ND-5000 or NF-5000.

Section 8.0 provides additional information on examination and acceptance criteria for the packaging.

2.4 GENERAL REQUIREMENTS FOR ALL PACKAGES

10 CFR 71.43 establishes the general standards for packages. This section identifies these standards and provides the bases that demonstrate compliance.

2.4.1 Minimum Packaging Size

10 CFR 71.43(a) requires that:

"The smallest overall dimension of a package must not be less than 10 cm (4″)."

The smallest overall dimension of the package is the diameter of the cask (73.20″), which is larger than 4″. Therefore, the minimum package size requirement is satisfied.

2.4.2 Tamper-Indicating Features

10 CFR 71.43(b) requires that:

"The outside of a package must incorporate a feature, such as a seal, which is not readily breakable, and which, while intact, would be evidence that the package has not been opened by unauthorized persons."

The 8-120B package incorporates a tamper resistant seal that is installed between the cask body and each of the two impact limiters after the package has been closed. Breach of these seals would indicate that the package has been tampered with by unauthorized persons.

2.4.3 Positive Closures

10 CFR 71.43(c) requires that:

"Each package must include a containment system securely closed by a positive fastening device that cannot be opened unintentionally or by a pressure that may arise within the package,"

The 8-120B package uses 20 bolts that fasten the primary lid to the cask body and 12 bolts to attach the secondary lid to the primary lid. Additionally, the vent port is closed with the help of threaded attachment. These closure components are encompassed within the two impact limiters when the package is prepared for the shipment. They can not be opened unintentionally. Also, it has been shown that the MNOP produces very small bolt loads. These loads are much smaller than the bolt pre-tension and are not capable of loosening them.

2.5 LIFTING AND TIE-DOWN STANDARDS FOR ALL PACKAGES

10 CFR 71.45 specifies the requirements for the lifting and tie-down devices that are "structural parts of the package". The 8-120B package is designed to be lifted with two removable lifting ears that are attached to the side of the cask. The primary and secondary lids are each furnished with three lifting lugs by which the lids may be removed from the cask. The cask is also equipped with four tie-down arms that are used for the tie-down of the 8-120B cask during transportation.

2.5.1 Lifting Devices

According to 10 CFR 71.45(a), "any lifting device, that is a structural part of the package must be designed with a minimum safety factor of three against yield when used to lift the package in the intended manner and it must be designed so that failure of any lifting device under excessive load would not impair the ability of the package to meet other requirements of this subpart."

The 8-120B Cask is designed to be lifted with the help of a pair of lifting lugs. Depending on the crane characteristics, a dynamic load amplification may result due to such lifting. The dynamic load factor for a typical crane is between 1.0 and 1.1. For conservatism a dynamic load factor of 1.3 is used for the evaluation of the lifting assembly. It should be noted that the users of this cask shall perform an evaluation based on their crane characteristics to obtain the dynamic load factor and ensure that it is less than 1.30 in order to use this cask.

2.5.1.1 Cask Lifting Ears

(1) <u>Cask Lifting Ear Eye Tear-out Stresses</u>

The cask lifting ears can be used only with the impact limiters removed. Therefore, the total lifted weight is:

$$74{,}000 - 2 \times 4{,}860 = 64{,}280 \text{ lbs}$$

With the dynamic amplification of 1.3 the load is:

$$W = 1.3 \times 64{,}280 = 83{,}564 \text{ lbs} \quad \text{say } 84{,}000 \text{ lbs}$$

For three times the weight of the cask, the vertical ear load is:

$$P_v = \frac{3W}{2\,\text{ears}} = \frac{3 \times 84{,}000}{2} = 126{,}000 \text{ lb/ear}$$

The critical tear-out area for the cask lifting ear is determined from Figure 2-6 as:

$$A_{tear-out} = 2 \times t \times d$$

Where:

t = section thickness = 1.0 in.

d = tear-out distance = 1.6 in.

$$A_{tear-out} = 3.20\ in^2$$

As previously determined, the vertical force applied to the cask lifting ear is 126,000 lbs. This results in a nominal tear-out stress of:

$$\tau = \frac{P}{A_{\text{tear-out}}} = \frac{126{,}000}{3.20} = 39{,}375\ \ psi$$

The allowable shear stress is $0.6 \times \text{Allowable Normal Stress} = 0.6 \times S_y$

The tie-down arms and lifting ears are fabricated from ASTM A514 or ASTM A517 material with minimum yield stress of 90,000 psi. Therefore,

$$\tau_{allowable} = 0.6 \times 90{,}000 = 54{,}000 psi$$

This corresponds to a factor of safety of:

$$F.S. = \frac{\tau_{\text{allowable}}}{\tau} = \frac{54{,}000}{39{,}375} = 1.37$$

(2) <u>Lifting, Ear Mounting Plate Weld Stresses</u>

The stresses in the welds attaching the lifting ear mounting plate to the cask outer shell are found by applying the bolt shear and tensile forces to the weld around the perimeter of the plate. The shear stress in the weld due to the shear force is given by,

$$\tau_1 = \frac{V}{A_w}$$

Where:

A_w = effective weld area
$= 2 \times (b + L) \times t \times 1.0 = 2 \times 19.5 \times 1.375 \times 1.0 = 53.625\ in^2$

b = plate width = 7.5 in.

L = plate length = 12 in.

t = weld leg dimension = 1.375 in.

V = shear force = 126,000 lb

$$\tau_1 = 2{,}350\ psi$$

The shear stress in the weld due to the tensile force is given by:

$$\tau_2 = \frac{F}{A_w}$$

Where:

A_w = weld area as defined above = 53.625 in^2

F = tensile force = 7,298 lb. [Calculated in Section 2.5.1.1(4)]

$$\tau_2 = 136\ psi$$

The maximum shear stress is given by:

$$\tau_{\max} = \sqrt{\tau_1^{\ 2} + \tau_2^{\ 2}} = 2{,}354\, psi$$

This corresponds to a factor of safety for the welds of:

$$F.S. = \frac{\tau_{\text{allowable}}}{\tau_{\max}} = \frac{22{,}800}{2{,}354} = 9.69$$

(3) <u>Outstanding Lifting Ear Plate Weld Stresses</u>

The outstanding lifting ear plate is attached to the lower flush plate with a vertical double vee weld, as shown in Figure 2-6.

The shear stress in the weld due to the shear force is given by:

$$\tau_3 = \frac{V}{A_w}$$

Where:

A_w = effective weld area = $2 \times t \times L$

t = Weld leg dimension = 0.5 in

L = Plate length = 12.0 in

V = shear force = 126,000 lb

$$\tau_3 = 10{,}500\ psi$$

The shear stress in the weld due to the tensile force is found from:

$$\tau_4 = \frac{F}{A_w}$$

Where:

A_w = effective weld area as defined above

F = tensile force = 7,298 lb. [Calculated in Section 2.5.1.1(4)]

$\tau_4 = 608 \ psi$

The maximum shear stress is given by:

$$\tau_{max} = \sqrt{\tau_3^{\ 2} + \tau_4^{\ 2}} = 10{,}518 \ psi$$

This corresponds to a factor of safety for the welds of:

$$F.S. = \frac{\tau_{allowable}}{\tau_{max}} = \frac{22{,}800}{10{,}518} = 2.17$$

(4) <u>Bolt Stresses</u>

The equations of equilibrium for the lifting ear shown in Figure 2-5 are:
Summation of Forces:

Horizontal: $F + P_H - R_T = 0$

Vertical: $P_v - V = 0$

Summation of Moments about point O:

$$25 \times F + 2.688 \times P_H - 5 \times P_v + 2 \times V = 0$$

Given:

P_v = 126,000 lbs

$$P_H = \frac{P_v}{\tan 60} = 72{,}746 \ lbs$$

Then:

V = 126,000 lb.

$F = (1/25)(5 \times P_v - 2.688 \times P_H - 2 \times V)$
$= 7{,}298$ lb.

R_T = 80,044 lb.

Each lifting ear is attached to the cask, as shown in Figure 2-6, using four 1-1/4 – 7 UNC-2A, 2-3/4 inch long ASTM A354 Grade BD hex head bolts. The stress area for each bolt is 0.969 in^2.

The shear force, V, will be carried by four bolts, so the shear stress in the bolts is:

$$\tau = \frac{126{,}000}{4 \times 0.969} = 32{,}508\ psi$$

The tensile force, F, will be carried by the four bolts. The resulting tensile stress will be:

$$\sigma_t = \frac{F}{4 \times 0.969} = 1{,}883\ \ psi$$

The maximum principal stresses in the bolt are found by:

$$\sigma_p = \frac{\sigma_t}{2} \pm \sqrt{\left(\frac{\sigma_t}{2}\right)^2 + \tau^2} = \frac{1{,}883}{2} \pm \sqrt{\left(\frac{1{,}883}{2}\right)^2 + (32{,}508)^2}$$

Thus:

$$\sigma_{p1} = 33{,}463 psi$$

$$\sigma_{p2} = -31{,}580 psi$$

The maximum shear stress is given by:

$$\tau_{\text{maximum}} = \frac{\sigma_{\text{p1}} - \sigma_{\text{p2}}}{2} = 32{,}522\ psi$$

The yield stress for ASTM A354, Grade BD material bolts is 130,000 psi. Therefore, the allowable shear stress is:

$$\tau_{allowable} = 0.6 \times \text{Allowable Normal Stress} = 0.6 \times S_y$$

The factor of safety for the bolts is:

$$F.S. = \frac{\tau_{\text{allowable}}}{\tau_{\text{maximum}}} = \frac{0.6 \times 130{,}000}{32{,}522} = \frac{78{,}000}{32{,}522} = 2.40$$

(5) <u>Threads - Cask Metal</u>

Because the cask material is weaker than the bolt material, failure will occur at the root of the cask material threads. From Reference 2-19, the equation for the length of thread engagement required to develop full strength of the threads is:

$$L_e = \frac{S_{\text{st}} \times 2 \times A_{\text{s}}}{S_{\text{nt}} \times \pi \times n \times D_{\text{min}} \left[\left(\frac{1}{2 \times \text{n}} \right) + 0.57735 \times (D_{\text{min}} - E_{\text{nmax}}) \right]}$$

Where:

D_{min} = Min. O.D. of bolt, in.
= 1.2314 in.

E_{nmax} = Max. P.D. of cask threads, in.
= 1.167 in.

S_{st} = Tensile Strength of bolt material, psi
= 150,000 psi

n = Threads per inch
= 7.0 threads/in.

A_s = Stress area of bolt threads, in^2
= 0.969 in^2

S_{nt} = Tensile strength of cask material, psi
= 70,000 psi

L_e = Length of thread engagement required to develop full strength, in.

$$L_e = \frac{150{,}000 \times 2 \times 0.969}{\pi \times 70{,}000 \times 7 \times 1.2314 \times \left[\left(\frac{1}{2 \times 7}\right) + 0.57735 \times (1.2314 - 1.167)\right]} = 1.41 \text{ in Deep}$$

The bolt engagement provided in the design is 2.75-1 = 1.75 inch, which is larger than 1.41 inch required.

(6) Cask Lifting Ear Stress Summary

The results of the cask lifting ear stress analyses are summarized below from Sections 2.5.1.1 (1) to 2.5.1.1 (5):

Location	Max. Shear Stress Memb.+Bending (psi)	Factor of Safety
Lifting ear tear-out	39,375	1.37
Lifting ear mounting plate (weld)	2,354	9.69
Outstanding lifting ear plate (weld)	10,518	2.17
Bolt	32,522	2.40

(7) Failure of the Cask Lifting Ears under Excessive Loads

From the stress summary presented above it is observed that the lifting ear design has the minimum margin of safety against the tear-out. Therefore, under excessive loading the failure of the lifting ear will occur by tear-out at the hole. This will not impair the ability of the package to meet other regulatory requirements.

2.5.1.2 Primary and Secondary Lid Lifting Lugs

The primary and secondary lid lifting lugs have the same design and are illustrated in Figures 2-7 and 2-8. They are sized such that the combined weight of the primary and secondary lids may be lifted from either the secondary lift lugs or the primary lift lugs. These lugs are made of ASTM A516 Gr70 material.

(1) <u>Weight Analysis</u>

Weights of the primary and secondary lids are as follows:

Primary lid (including bolts)	5,180 lbs
Secondary lid	2,140 lbs
Total lid weight	7,320 lbs.

The effective weight to be lifted by each lug, P_v with the dynamic load factor of 1.3, is therefore determined as:

$$P_v = \frac{3 \times 1.3 \times 7{,}320}{3\ lugs} = 9{,}516\ lbs.$$

Considering a 45° lift angle, the total load per lug (see Figure 2-8) is determined as:

$$P = \frac{P_v}{\cos 45} = \frac{9{,}516}{0.707} = 13{,}460\ lbs$$

This results in a shear force of:

$$P_H = P \cos 45 = 13{,}560 \times 0.707 = 9{,}516\ lbs$$

(2) <u>Lifting Lug Tear-out Stress Analysis</u>

The critical section for lifting lug tear-out was determined to be as shown in Figure 2-9. Numerically, this area is:

$$A_{shear} = 2 \times L \times t$$

Where:

L = length of tear-out section = 1.1875 in.

t = Section thickness = 0.75 in.

A_{shear} = 1.78 in^2

As previously determined in Section 2.5.1.2 (1), the total cable force is 13,460 lbs. This results in a shear stress due to tear-out of:

$$\tau = \frac{P}{A_{shear}} = \frac{13{,}460}{1.78} = 7{,}562\ psi$$

These lugs are fabricated from ASTM A516 Grade 70 material with minimum yield stress of 38,000 psi. Therefore the allowable shear stress is:

$$\tau_{allowable} = 0.6S_y = 0.6 \times 38{,}000 = 22{,}800 psi$$

This translates into a factor of safety of:

$$F.S. = \frac{\tau_{allowable}}{\tau} = \frac{22{,}800}{7{,}562} = 3.02$$

(3) <u>Base Stresses</u>

The tensile stress at the bottom of the lifting lug as shown on Figure 2-8 is:

$$\sigma_{tensile} = \frac{P_v}{A_b}$$

Where:

A_b = base area = w×t in^2

w = lug width = 4 in.

t = lug thickness = 0.75 in.

P_v = vertical reaction = 9,516 lbs.

$$\sigma_{tensile} = \frac{9{,}516}{3} = 3{,}172\ psi$$

The bending stress, maximum at the bottom outer edge of each lug, is:

$$\sigma_{bending} = \frac{M \times c}{I}$$

Where:

M = bending moment = 3 x P_H = 3 x 9,516 = 28,548 in-lbs

c = distance to neutral axis = 2 in.

I = moment of inertia $= \dfrac{b \times h^3}{12}$

b = lug thickness = 0.75 in.

h = lug height = 4 in.

$$\sigma_{bending} = \frac{(28{,}548 \times 2)}{\dfrac{0.75 \times 4^3}{12}} = 14{,}274 \ \ psi$$

At the outer edge of the lift ear, the bending stress will add to the tensile stress to produce a total tensile stress of:

$$\sigma_{total} = \sigma_{bending} + \sigma_{tensile} = 14{,}274 + 3{,}172 = 17{,}446 \ \ psi$$

The shear stress at the bottom of the lift ear is:

$$\tau = \frac{P_H}{A_{bs}}$$

Where:

P_H = shear force = 9,516 lb.

A_{bs} = base area = 3 in^2

$$\tau = 3{,}172 \ \ psi$$

The effects of the shear and total tensile stresses are combined to form the principal stresses for the lifting ears as follows:

$$\sigma_{p1}, \sigma_{p2} = \frac{\sigma_{total}}{2} \pm \left[\left(\frac{\sigma_{total}}{2} \right)^2 + (\tau)^2 \right]^{1/2}$$

Thus,

$$\sigma_{p1} = 18{,}005 psi$$

$$\sigma_{p2} = -559 \ psi$$

The maximum shear stress will be:

$$\tau_{\text{maximum}} = \frac{\sigma_{p1} - \sigma_{p2}}{2} = 9{,}282 \ psi$$

Using an allowable shear = $0.6 \times S_y$ and a yield stress of 38,000 psi, therefore the allowable shear stress is:

$$\tau_{allowable} = 0.6 \times 38{,}000 = 22{,}800 \, psi$$

The factor of safety will be:

$$F.S. = \frac{\tau_{\text{allowable}}}{\tau_{\text{maximum}}} = \frac{22{,}800}{9{,}282} = 2.46$$

(4) <u>Lifting Lug Stress Analysis at Pin Hole</u>

The maximum tensile stress in the lifting lug occurs in the section of least cross-sectional area, as shown in Figure 2-10. Numerically, this area is found to be:

$$A = (W - D) \times t$$

Where:

W = width of lifting lug at hole centerline = 4.0 in.

D = diameter of hole = 1.63 in.

t = plate thickness = 0.75 in.

A = 1.78 in^2

From Section 2.5.1.2(1), the shear and tensile forces were determined as:

$P_H = Pv = 9{,}516$ lbs.

This translates into a nominal shear and tensile stress of:

$$\tau = \sigma_t = \frac{P_H}{A} = \frac{P_v}{A} = \frac{9{,}516}{1.78} = 5{,}346 \ psi$$

Combining the effects of the shear and tensile stresses to form the principal stresses yields:

$$\sigma_{p1}, \sigma_{p2} = \frac{\sigma_t}{2} \pm \left[\left(\frac{\sigma_t}{2} \right)^2 + \tau^2 \right]^{1/2} = \frac{5{,}346}{2} \pm \left[\left(\frac{5{,}346}{2} \right)^2 + 5{,}346^2 \right]^{1/2}$$

Thus,

$$\sigma_{p1} = 8{,}650 \ psi$$

$$\sigma_{p2} = -3{,}304 \ psi$$

The maximum shear stress is found to be:

$$\tau_{\max imum} = \frac{\sigma_{p1} - \sigma_{p2}}{2} = 5{,}977 \, psi$$

These lugs are fabricated from ASTM A516 Grade 70 material with minimum yield stress of 38,000 psi. Therefore the allowable shear stress is:

$$\tau_{allowable} = 0.6 S_y = 0.6 \times 38{,}000 = 22{,}800 \, psi$$

This translates into a factor of safety of:

$$F.S. = \frac{\tau_{\text{allowable}}}{\tau_{\text{maximum}}} = \frac{22{,}800}{5{,}977} = 3.81$$

(5) <u>Primary and Secondary Lid Lifting Lug Stress Summary</u>

The results of the lifting lug stress analyses are summarized as follows:

Location	Max. Shear Stress Memb. + Bending (psi)	Factor of Safety
Lug tear-out	7,562	3.02
Base	9,282	2.46
At pin hole	5,977	3.81

2.5.2 Tie-Down Devices

The cask is equipped with four tie-down arms that are used for the tie-down of the 8-120B cask during transportation (Figure 2-11). The transportation of the packages in the United States is controlled under the provisions of 49 CFR 393 (Reference 2-12). Loadings are specified by 49 CFR 393.102 for minimum performance criteria for cargo securement devices and systems. However, 10 CFR 71.45(b) requires that:

"If there is a system of tie-down devices that is a structural part of the package, the system must be capable of withstanding, without generating stress in any material of the package in excess of its yield strength, a static force applied to the center of gravity of the package having a vertical component 2 times the weight of the package with its contents, a horizontal component along the direction in which the vehicle travels of 10 times weight of the package with contents, and a horizontal component in the transverse direction of 5 times the weight of the package with its contents."

Since the 10 CFR 71 loading on the tie-down system is much more severe than the 49 CFR 393 loading, it is used for the evaluation of the 8-120B package for the transportation conditions.

Description of the Tie-Down Device

The package has been provided with two 1-1/2" thick steel plates (tie-down arms) which are welded to the external shell of the cask body. The steel plates are used for tying the package down. They project outward from the cask in four directions so as to allow specially designed rigging components to be connected to the ends of the tie-down arms. Four shear blocks prevent movement of the base of the package.

The geometric configuration of the tie-down system was selected such that:

(1) The resultant tie-down arm tensile loads are tangent to the cask surface in order to minimize the effects of out-of-plane stresses in the cask shell. (See Figure 2-12 for determination of the tie-down geometry).

(2) The shear block loads are transferred to the cask surface via compression in the lower overpack.

Tie-Down Forces

The analytical model for determining the loads required preventing rotation and translation of the package due to the applied loads is shown in Figure 2-13. The shear block forces at the bottom of the package are represented by the orthogonal components of a single force vector, S, making an angle of θ with the global y-axis.

The six equations of equilibrium for the free body diagrams of Figure 2-13 yield the following for the six unknowns:

$$\sum F_x = 0$$

$$\frac{-59}{102.34}\times T_1 + \frac{59}{102.34}\times T_2 + \frac{59}{102.34}\times T_3 - S\times\sin\theta = 5(74) = 370$$

$$\sum F_y = 0$$

$$\frac{72.3}{102.34}\times T_1 + \frac{72.3}{102.34}\times T_2 - \frac{72.3}{102.34}\times T_3 + S\times\cos\theta = 10(74) = 740$$

$$\sum F_z = 0$$

$$\frac{42}{102.34}\times T_1 + \frac{42}{102.34}\times T_2 + \frac{42}{102.34}\times T_3 - V = 2(74) = 148$$

$$\sum M_x = 0$$

$$\left[\frac{42}{102.34}\times 23.73 + \frac{72.3}{102.34}\times 79\right]\times T_1 + \left[\frac{42}{102.34}\times 23.73 + \frac{72.3}{102.34}\times 79\right]\times T_2 - \left[\frac{42}{102.34}\times 23.73 + \frac{72.3}{102.34}\times 79\right]\times T_3 + 24\times S\times\cos\theta = 10\times 74\times 62.5 = 46{,}250$$

$$\sum M_y = 0$$

$$\left[\frac{42}{102.34}\times 29.04 - \frac{59}{102.34}\times 79\right]\times T_1 + \left[\frac{59}{102.34}\times 79 - \frac{42}{102.34}\times 29.04\right]\times T_2 + \left[\frac{59}{102.34}\times 79 - \frac{42}{102.34}\times 29.04\right]\times T_3 - 24\times S\times\sin\theta = 5\times 74\times 62.5) = 23{,}125$$

$$\sum M_z = 0$$

$$\left[\frac{(59^2+72.3^2)^{0.5}}{102.34}\times 37.5\right]\times T_1 - \left[\frac{(59^2+72.3^2)^{0.5}}{102.34}\times 37.5\right]\times T_2 + \left[\frac{(59^2+72.3^2)^{0.5}}{102.34}\times 37.5\right]\times T_3 = 0$$

In matrix notation the equations appear as:

$$\begin{bmatrix} -0.577 & 0.577 & 0.577 & -1 & 0 & 0 \\ 0.706 & 0.706 & -0.706 & 0 & 1 & 0 \\ 0.410 & 0.410 & 0.410 & 0 & 0 & -1 \\ 65.550 & 65.550 & -65.550 & 0 & 24 & 0 \\ -33.626 & 33.626 & 33.626 & -24 & 0 & 0 \\ 34.194 & -34.194 & 34.194 & 0 & 0 & 0 \end{bmatrix} \times \begin{bmatrix} T_1 \\ T_2 \\ T_3 \\ S\sin\theta \\ S\cos\theta \\ V \end{bmatrix} = \begin{bmatrix} 370 \\ 740 \\ 148 \\ 46{,}250 \\ 23{,}125 \\ 0 \end{bmatrix}$$

Simultaneous solution of the six equations yields the following:

T_1 = 293 kips
T_2 = 653 kips
T_3 = 360 kips

$S\sin\theta$ = 46 kips
$S\cos\theta$ = 326 kips
V = 388 kips

Tie-Down Arm

The tie-down arm is detailed as shown in Figure 2-14. The maximum tie-down arm load of 653 kips = 653,000 lbs. was determined in Section 2.5.2 above.

Stresses for the tie-down arm and its connection to the exterior cask shell are determined as follows:

Tension on Net Section at Hole

$$A_{net} = (6.5 - 2.875) \times 2.75 = 9.97 \text{ in}^2$$

$$\sigma_t = \frac{653{,}000}{9.97} = 65{,}497 psi$$

$$\sigma_{allow} = \sigma_y = 90{,}000 psi$$

Therefore:

$$F.S. = \frac{\sigma_{allow}}{\sigma_t} = \frac{90{,}000}{65{,}497} = 1.37$$

Contact Bearing at Lifting Hole

$$A_{brg} = 2.75 \times 2.75 = 7.56 \ in^2$$

$$\sigma = \frac{653{,}000}{7.56} = 86{,}376 \ psi$$

$$\sigma_{allow} = 1.35 \times 90{,}000 = 121{,}500 \ psi$$ (See ST-635, Reference 2-25)

Therefore:

$$F.S. = \frac{\sigma_{allow}}{\sigma} = \frac{121{,}500}{86{,}376} = 1.41$$

Arm Tension

$$A_{arm} = 1.5 \times 6.5 = 9.75\ in^2$$

$$\sigma_t = \frac{653{,}000}{9.75} = 66{,}974\ psi$$

$$\sigma_{allow} = \sigma_y = 90{,}000\, psi$$

Therefore:

$$F.S. = \frac{\sigma_{allow}}{\sigma} = \frac{90{,}000}{66{,}974} = 1.34$$

Edge Tear out

$$A = (3.25 + 0.75 - 0.5 \times 2.875) \times 2.75 \times 2 = 14.09 in^2$$

$$\tau = \frac{653{,}000}{14.09} = 46{,}345\ psi$$

$$\tau_{allow} = 54{,}000\ psi$$

Therefore:

$$F.S. = \frac{\tau_{allow}}{\tau} = \frac{54{,}000}{46{,}345} = 1.17$$

Weld Stresses

Welds connecting each tie-down arm to the cask outside shell are evaluated in Energy*Solutions* Document ST-635 (Reference 2-25).

Outer Shell Stresses

To evaluate the cask outer shell, conservatively assuming the maximum tensile load of 653 kips is applied at each tie-down arm (symmetrical loading) and therefore a one-quarter finite element model of the 8-120B cask can be utilized. The model of the outer shell and one tie-down arm is made of all solid elements as detailed in Energy*Solutions* Document ST-635 (Reference 2-25). The cask outside shell is made of 20-node solid element (ANSYS SOLID186) and that of the tie-down arm is made of 10-node solid element (ANSYS SOLID187). Each tie-down arm is welded onto the cask outer shell with groove and fillet welds, as shown in Energy*Solutions* Document ST-635 (Reference 2-25). The groove welds are included in the FEM and the fillet welds are conservatively ignored. Since the objective of the modeling is to obtain stresses at the tie-down arm and the cask outer-shell interface, the doubler-plates near the tie-down arm holes have been

neglected. The stresses in the vicinity of the hole have been evaluated in Section 2.5.2 above. (Tie-Down Arm section above).

The interface between the unwelded portion of the tie-down arm and the outer shell of the cask has been modeled by pairs of 3-dimensional 8-node contact (CONTA 174) and 3-dimensional target segments (TARGE 170) elements. The tie-down arm load is applied at the hole-surface as a distributed load.

Figure 2-15 shows the finite element model of the outer shell and the tie-down arm. Figure 2-16 gives the maximum principal stress (tensile) for the outer shell. The maximum principal stress (tensile) of 36,653 psi obtained from the analysis is less than the yield stress of the material (38,000 psi) and is considered acceptable.

Figure 2-17 provides the maximum stress intensities in the entire finite element model. It shows that under the applied loading of 653,000 lbs, the maximum stresses are developed in the tie-down arm near the hole and in the welds. These stresses are much higher than those in the cask outer shell. Therefore, it is concluded that the failure of the tie-down arm under excessive loading will not impair the cask from meeting other requirements of the regulations.

Any other part of the package that could be used for the tie-down (e.g. impact limiter lifting lugs) will be rendered inoperable during the transportation of the package.

2.6 NORMAL CONDITIONS OF TRANSPORT

This Section demonstrates that the package is structurally adequate to meet the performance requirements of Subpart E of 10 CFR 71 when subjected to NCT as defined in 10 CFR 71.71. Compliance with these requirements is demonstrated by analyses in lieu of testing as allowed by 10 CFR 71.41(a) and Regulatory Guide 7.6 (Reference 2-3).

The structural analyses of the 8-120B Cask under NCT events have been performed through the use of finite element models. ANSYS finite element analysis code (Reference 2-11) has been employed to perform the analyses. The cask assembly has at least one plane of symmetry, so a one-half model of the cask has been utilized for the analyses.

The model of the cask is made using 3-dimensional 8-node structural solid elements (ANSYS SOLID185) to represent the major components of the cask, the bolting ring, the lid, and the bolts. The shell components of the cask - the inner and outer shells, and the baseplates have been represented in the finite element model by SOLSH190 elements.

The fire shield does not provide any structural strength to the cask. Therefore, it is not included in the model.

The poured lead in the body is not bonded to the steel. It is free to slide over the steel surface. Therefore, the interface between the lead and the steel is modeled by pairs of 3-d 8 node contact element (CONTA174) and 3-d target (TARGE170) elements. These elements allow the lead to slide over the steel at the same time prevent it from penetrating the steel surface. The interface between the two plates that form the lid is also modeled by the contact-target pairs. The transition from a coarser mesh to a finer mesh, as well as bondage between various parts of the model, is also modeled using these elements.

Figure 2-18 shows the finite element model used in the analyses of various load cases. The model has node-to-node and element-to-element correspondence with the thermal finite element model used for the thermal analysis of the package, described in Section 3.3. The nodal temperatures during various NCT events are obtained from the analyses in Section 3.

The details of the finite element model, including the assumptions, modeling details, boundary conditions, and input and output data are included in the Energy*Solutions* document ST-626 (Reference 2-13).

2.6.1 Heat

The thermal evaluation of the 8-120B package is described in Section 3.3. Results from the thermal analyses are used in performing the evaluation in this section.

2.6.1.1 Summary of Pressure and Temperatures

Based on the requirements of 10 CFR 71.71(c)(1), the thermal finite element model described in Section 3.3 computes the nodal temperature of the cask body. Figure 2-19 (reproduced from Figure 3-4) shows the temperature distribution in the structural components of the package. The maximum temperatures in various components of the package are summarized as follows (Reference Table 3-1 and Figure 2-19):

Fire Shield	=	160.6°F
Outer Shell	=	161.3°F
Inner Shell	=	161.5°F
Lead	=	161.4°F
Seal	=	161.7°F
Lid/Baseplate	=	162.6°F

The maximum temperature of the cask cavity is under normal conditions is 162.6° which is conservatively assumed to be the average cask cavity temperature. The gas mixture in the cavity is conservatively assumed to be 180° F. This temperature has been used for calculating the Maximum Normal Operating Pressure (MNOP) in Section 3.3.2. The MNOP of 35.0 psig is used for the evaluation of the hot and cold environment load conditions.

2.6.1.2 Differential Thermal Expansion

The structural finite element model used for the analyses of the 8-120B package under various loading conditions, described in Section 2.6, uses temperature dependent material properties of the cask components. The differential thermal expansion of various components of the cask is included in the stress calculation of the package.

2.6.1.3 Stress Calculations

The stresses in the package under the hot environment loading conditions have been performed in Energy*Solutions* Document ST-626 (Reference 2-13). The loading combination is listed in Table 2-1. Table 2-5 presents the maximum stresses in various components of the package. Figure 2-20 shows the plot of stress intensity contour in the cask body.

2.6.1.4 Comparison with Allowable Stresses

The stresses in the package under the hot environment loading conditions are compared with their allowable values in Table 2-5. The allowable values in various components of the package are listed

in Table 2-2. It is noticed from the comparison with the allowable values that all the components of the package experience stresses well below their allowable values. Of all components, a minimum factor of safety of 1.22 occurs in the bolting ring.

2.6.2 Cold

The thermal evaluation of the 8-120B package under cold conditions is described in Section 3.3. Results from the thermal analyses are used in performing the evaluation in this section.

Based on the requirements of 10 CFR 71.71(c)(2), the thermal finite element model described in Section 3.3 computes the nodal temperature of the cask body. Figure 2-21 (reproduced from Figure 3-5) shows the temperature distribution in the structural components of the package.

The structural finite element model used for the analyses of the 8-120B package under various loading conditions, described in Section 2.6, uses temperature dependent material properties of the cask components. The lead shrinkage, caused due to the differential thermal expansion of the lead and cask shells, is included in the stress calculation of the package.

The stresses in the package under the cold environment loading conditions have been performed in Energy*Solutions* Document ST-626 (Reference 2-13). The loading combination is listed in Table 2-1. Table 2-6 presents the maximum stresses in various component of the package. Figure 2-22 shows the plot of stress intensity contour in the cask body.

The stresses in the package under the cold environment loading conditions are compared with their allowable values in Table 2-6. It is noticed from the comparison with the allowable values that all the components of the package experience stresses well below their allowable values. Of all components, a minimum factor of safety of 3.94 occurs in the inner shell.

For the evaluation of the cold environment the ambient temperature of -40°F has been specified by the regulation. However, for the initial conditions for the other load combinations the ambient temperature of -20°F has been specified in 10 CFR 71.73(b). In the load combinations described in Regulatory Guide 7.8 (Reference 2-2), this condition is associated with the minimum decay heat load. It is not intuitively obvious that the minimum decay heat load in the cold conditions will result in a conservative estimate of thermal stresses in the package. Therefore, the cold condition's load combinations listed in Table 2-1 have been performed two ways - one with the maximum decay heat load and another with no decay heat load. The combinations that result in larger stresses have been reported in this SAR as the cold combination.

Per regulatory Guide 7.8 (Reference 2-2), the cask must be able to resist brittle fracture failure under normal conditions of transport and hypothetical accident conditions at temperature as low as -20°F. Fracture critical parts of the cask are shown in Figure 2-23. For compliance with Category II fracture toughness requirements of NUREG/CR-1815, the nil ductility transition temperature (T_{NDT}) of this steel with which these parts are fabricated must be less than the value determined by the equation:

$$T_{NDT} = LST - A$$

Where:

LST = Lowest service temperature (-20°F)

A = Value from Figure 7 of NUREG/CR 1815 (Reference 2-18) also shown in Figure 2-24

Table 2-7 tabulates the T_{NDT} required for the fracture critical components of the 8-120B cask except bolting.

For the bolting NUREG/CR-1815 does not provide any guidance. ASME Section III Subsection ND is used to specify the toughness requirements of the fracture-critical bolts. The lid bolts and the bolts attaching the lifting lugs with the cask body are considered to be fracture-critical. The toughness requirements for these bolts, based on article ND-2333 of the code are:

- Energy required – 30 ft-lb
- Lateral expansion = 15 mils

The Charpy V-Notch test must be performed at -20°F using ASTM A-370 standard.

2.6.3 Reduced External Pressure

10 CFR 71.71 (c)(3) requires that package be evaluated for a reduced external pressure of 3.5 psi. The MNOP of the 8-120B package is 35.0 psig (14.7 psi atmospheric pressure). With the external pressure reduced to 3.5 psi, the inside pressure of the package will be:

$$p_{\text{reduced external}} = 35.0 + 14.7 - 3.5 = 46.2 \text{ psi (conservatively use 50.0 psi)}$$

The load combination for the reduced external pressure is listed in Table 2-1 under "Minimum External Pressure". Please note that this nomenclature is retained to be consistent with Regulatory Guide 7.8.

The stresses in the package under the reduced external pressure loading conditions have been performed in Energy*Solutions* Document ST-626 (Reference 2-13). Table 2-8 presents the maximum stresses in various components of the package. Figure 2-25 shows the plot of stress intensity contour in the cask body.

The stresses in the package under the reduced external pressure loading conditions are compared with their allowable values in Table 2-8. It is noticed from the comparison with the allowable values that all the components of the package experience stresses well below their allowable values. A minimum factor of safety of 2.43 occurs in the bolting ring.

2.6.4 Increased External Pressure

10 CFR 71.71 (c)(4) requires that package be evaluated for an increased external pressure of 20 psi. The MNOP of the 8-120B package is 35 psig (14.7 psi atmospheric pressure). To be conservative for this loading the package internal pressure is assumed to be the minimum (i.e., 0 psi) and the external pressure has been increased to 25 psi. The load combination for the increased external pressure is listed in Table 2-1

The stresses in the package under the increased external pressure loading conditions have been performed in Energy*Solutions* Document ST-626 (Reference 2-13). Table 2-9 presents the maximum stresses in various component of the package. Figure 2-26 shows the plot of stress intensity contour in the cask body.

The stresses in the package under the increased external pressure loading conditions are compared with their allowable values in Table 2-9. It is noticed from the comparison with the allowable values that all the components of the package experience stresses well below their allowable values. Of all components, a minimum factor of safety of 4.10 occurs in the inner shell.

2.6.5 Vibration

10 CFR 71.71 (c)(5) requires that "vibration normally incident to transport" be evaluated.

The 8-120B package consists of thick section materials that will be unaffected by vibration normally incident to transport, such as over the road vibrations.

2.6.6 Water Spray

Not applicable, since the package exterior is constructed of steel.

2.6.7 Free Drop

As described in Section 2.7.1 the analyses of the free drop of the package under NCT is performed in two steps. First the dynamic analyses of the package are performed using an Energy*Solutions* proprietary methodology outlined in document ST-551 (Reference 2-5) that utilizes the ANSYS/LS-DYNA computer code (Reference 2-11). The methodology was developed after a considerable amount of research and parametric studies for the accuracy of results. These studies included the choice of elements, mesh density, material damping, hourglass control, and, solution parameters and controls, etc. It was successfully validated against test results and is fully documented in an Energy*Solutions* proprietary document ST-551 (Reference 2-5). The sensitivity study of the modeling technique is documented in the EnergySolutions document ST-596 (Reference 2-29). A discourse on the use of foam properties in the LS-DYNA analyses of the casks is documented in the EnergySolutions document ST-618 (Reference 2-30). The methodology has also been used in a recently approved NRC cask package (3-60B).

Next, the detailed FEM analyses of the cask are performed using ANSYS. The analyses are performed in the three customary orientations – end, side and corner. All the load combinations listed in Table 2-1 are analyzed. The details of the package dynamic analyses are documented in Energy*Solutions* Document ST-625 (Reference 2-14). The documentation of the detailed FEM analyses of the package is provided in Energy*Solutions* Document ST-627 (Reference 2-15).

The summary of the results from the package dynamic analyses of the NCT free drop are presented in Table 2-10. The stresses in the cask under the load combinations involving the NCT free drop are described below.

2.6.7.1 End Drop

The following impact limiter reactions are obtained from Energy*Solutions* Document ST-625 (Reference 2-14).

Cold Conditions $= 1.556\times10^6$ lb (Table 2 and Figure 13 of Reference 2-14)

Hot Conditions $= 1.286\times10^6$ lb (Table 2 and Figure 16 of Reference 2-14)

For the NCT test in the end drop orientation, the maximum of the two reactions are used in the analyses.

The distribution of reactions and inertia loads used in the FEM analyses are identical to those described in Section 2.7.1.1 for the HAC loading, except that they have been linearly proportioned in the ratio of corresponding impact limiter reactions. The results obtained from the detailed FEM analysis of the cask are presented in Tables 2-11 and 2-12 for the hot and cold combinations, respectively.

Of all components, a minimum safety factor of 1.18 is computed for the loading combinations involving end drop.

2.6.7.2 Side Drop

The following impact limiter reactions are obtained from Energy*Solutions* Document ST-625 (Reference 2-14).

Cold Conditions	= 859,600 lb	(Table 2 and Figure 19 of Reference 2-14)
Hot Conditions	= 710,400 lb	(Table 2 and Figure 22 of Reference 2-14)

For the NCT test in the side drop orientation, the maximum of the two reactions are used in the analyses.

The distribution of reactions and inertia loads used in the FEM analyses are identical to those described in Section 2.7.1.2 for the HAC loading, except that they have been linearly proportioned in the ratio of corresponding accelerations. The results obtained from the detailed FEM analysis of the cask are presented in Tables 2-13 and 2-14 for the hot and cold combinations, respectively.

Of all components, a minimum safety factor of 1.21 is computed for the loading combinations involving side drop.

2.6.7.3 Corner Drop

The following impact limiter reactions are obtained from Energy*Solutions* Document ST-625 (Reference 2-14).

Cold Conditions	= 318,800 lb	(Table 2 and Figure 25 of Reference 2-14)
Hot Conditions	= 278,500 lb	(Table 2 and Figure 28 of Reference 2-14)

For the NCT test in the corner drop orientation, the maximum of the two reactions are used in the analyses.

The distribution of reactions and inertia loads used in the FEM analyses are identical to those described in Section 2.7.1.3 for the HAC loading, except that they have been linearly proportioned in the ratio of corresponding accelerations. The results obtained from the detailed FEM analysis of the cask are presented in Tables 2-15 and 2-16 for the hot and cold combinations, respectively.

Of all components, a minimum safety factor of 1.64 is computed for the loading combinations involving corner drop.

2.6.8 Corner Drop

Not applicable; the 8-120B package is not a fiberboard, wood, or fissile material package.

2.6.9 Compression

Not applicable; the 8-120B package weighs more than 11,000 lbs.

2.6.10 Penetration

The package is evaluated for the impact of the hemispherical end of a vertical steel cylinder of 1¼″ diameter and 13 lb mass, dropped from a height of 40″ on to the exposed surface of the package.

The penetration depth of the 13 lb 1¼″ diameter rod dropped from a height of 40″ is calculated from the Ballistic Research Laboratories (BRL) formula cited in Reference 2-17. For a steel target, the penetration depth is given by the formula:

$$\left(\frac{e}{d}\right)^{3/2} = \frac{D V_0^{\,2}}{1.12\times10^6 \times K_s^{\,2}}$$

Where,

e	=	penetration depth, inch
d	=	effective projectile diameter, inch = 1.25″
W	=	missile weight, lb = 13 lb
D	=	caliber density of the missile, lb/in^3 = W/d^3
V_0	=	striking velocity of the missile, ft/sec
K_s	=	steel penetrability constant = 1.0

For a 40″ drop of the rod, the striking velocity,

V_0 = $(2\times32.2\times40/12)^{0.5}$ = 14.65 ft/sec
D = $13/1.25^3$ = 6.656 lb/in^3

Solving the penetration equation, we get,

$$e = 1.25\times\left(\frac{6.656\times14.65^2}{1.12\times10^6\times1^2}\right)^{2/3} = 0.0147''$$

The thickness of the 8-120B outer shell is 1½″, the lid is 3¼″ (min.), the outer baseplate is 3¼″ and the impact limiter shell is 12 gauge = 0.105″. All these thickness are greater than 0.0147″ required for penetration. Therefore, the penetration test will not cause any damage to the package. It should be noted that in the penetration evaluation, no credit for the lead shielding and the inner shell has been taken.

2.7 HYPOTHETICAL ACCIDENT CONDITIONS

2.7.1 Free Drop

The 8-120B package is shown to comply with the hypothetical accident conditions (HAC) test requirements by analytical methods in lieu of the physical tests. Advanced finite element methods have been employed in the analyses. A major assumption that is made in performing these analyses is that the dynamic behavior of the 8-120B package, which consists of the cask body and the impact limiters, can be decoupled into a dynamic behavior of the impact limiters and a pseudo-static behavior of the cask body. The rationale for this assumption is based on the relative stiffness of the impact limiters and the cask body. The impact limiters are made of a shock absorbing polyurethane material, which is very low in density compared to the cask body which is primarily made from steel and lead, with stainless steel used for the seal rings. The fundamental periods of the two components are, therefore, sufficiently far apart that little or no interaction takes place between their dynamic responses during the drop loading. The overall dynamic analyses of the package, in various drop orientations, are performed separately and the reactions of the impact limiter on the cask body, obtained from these analyses are used in detailed finite element analyses of the cask body.

Dynamic Analyses of the Package

Proprietary modeling techniques, developed by Energy*Solutions*, using an explicit dynamic finite element code, ANSYS/LS-DYNA (Reference 2-11), for the drop analysis of packages that use closed-cell cellular polyurethane foam impact limiters, have been employed to perform the drop analyses of the 8-120B package. The validation of the modeling techniques have been performed with the actual drop test data of a cask of similar size to the 8-120B. The details of the modeling techniques and the verification and validation with the test results are documented in an Energy*Solutions* proprietary document ST-551 (Reference 2-5). The Energy*Solutions* modeling techniques predict the acceleration results conservatively and the time-history trace of the analyses and test data are reasonably close to each other to validate the analysis.

The finite element model used for the analyses of the 8-120B package is described in details in Energy*Solutions* document ST-625 (Reference 2-14). Figures 2-27 and 2-28 show the finite element model. It is made of 8-node solid elements, 4-node shell elements, and 3-node spar elements.

Analyses of the 8-120B package have been performed in three customary drop orientations. The analyzed orientations are:

End Drop – The cask axis parallel to the drop direction (see Figure 2-29)

Side Drop – The cask axis perpendicular to the drop direction (see Figure 2-30)

Corner Drop – The C.G. of the cask directly over the impact point. The cask axis makes an angle of 38° with the vertical plane (see Figure 2-31).

The finite element transient analyses are performed for sufficiently large duration so that the primary as well as secondary impacts, if any, are included. The time-history data of the reaction forces between the package and the rigid contact surface are obtained for each load case (see Figure 2-32 for a typical plot). The time-history of the results are examined for various quantities such as the kinetic energy, internal energy, total energy, hourglass energy, and the external work (see Figure 2-33 for a typical plot). The time-history data of the maximum impact limiter crush are also obtained for each load case. The impact limiter attachment load time-histories are also obtained for each drop orientation.

The HAC drop tests, according to 10 CFR 71.73(b), must be performed at a constant temperature between -20°F and 100°F, which is most unfavorable for the feature under consideration. To envelop the entire spectrum of the temperature range, the dynamic analyses of the package are performed for two initial conditions – the cold condition (Ambient temperature -20°F) and the hot condition (ambient temperature 100°F). To be conservative, the larger of the two results are used for the detailed analyses of the cask body.

The details of the dynamic analyses of the 8-120B package, including the finite element model details, assumptions, boundary conditions, and the input and output data are included in the Energy*Solutions* document ST-627 (Reference 2-15).

The summary of the results from these analyses are presented in Table 2-17.

Detailed Analyses of the Cask

The detailed analyses of the cask under various drop test conditions have been performed using advanced finite element modeling techniques. ANSYS finite element analysis code (Reference

2-11) has been employed to perform the analyses. Since for all the drop orientations (end, side, corner), at least one plane of symmetry exists, a one-half model has been employed in all the analyses.

The model of the cask is made using 3-dimensional 8-node structural solid elements (ANSYS SOLID185) to represent the major components of the cask, the bolting ring, the lid, and the bolts. The shell components of the cask - the inner and outer shells, and the baseplates have been represented in the finite element model by SOLSH190 elements.

Since the fire shield does not provide any structural strength to the cask, it is not included in the model.

The poured lead in the body is not bonded to the steel. It is free to slide over the steel surface. Therefore, the interface between the lead and the steel is modeled by pairs of 3-d 8 node contact element (CONTA174) and 3-d target (TARGE170) elements. These elements allow the lead to slide over the steel and at the same time prevent it from penetrating the steel surface. The interface between the two plates that form the lid is also modeled by the contact-target pairs. The transition from a coarser mesh to a finer mesh, as well as bondage between various parts of the model, is also modeled using these elements.

Figure 2-34 shows the outline of the model depicting the material numbering. Figure 2-35 shows the finite element grid of the lid, seal plate, bolts, and the cask. Figure 2-36 shows the finite element grid of the cask body without the lead.

To incorporate the loading combinations of Table 2-1 for various drop conditions, the analyses have been performed for three thermal conditions. The loading combinations in hot conditions have been performed per Regulatory Guide 7.8, which requires an ambient temperature of 100°F and the maximum internal decay heat load. The loading combination for the cold conditions, per Regulatory Guide 7.8, requires an ambient temperature of -20°F and the minimum internal decay heat load. It is not intuitively obvious that the minimum decay heat load in the cold conditions will result in a conservative estimate of thermal stresses in the package. Therefore, the cold condition's load combinations listed in Table 2-1 have been performed two ways - one with the maximum decay heat load and another with the minimum decay heat load. The combinations that result in larger stresses have been reported in this SAR as the cold combination. The nodal temperatures for all the thermal conditions are obtained from the analyses in Section 3 and are applied to the structural models to get the appropriate load combinations.

The documentation of the detailed analyses of the cask, including the finite element model details, assumptions, boundary conditions, and the input and output data are included in the Energy*Solutions* document ST-627 (Reference 2-15). ANSYS finite element model grid convergence study has been performed in Energy*Solutions* document ST-608 (Reference 2-16). This document also provides the validation of the major modeling techniques used in the finite element analyses.

2.7.1.1 End Drop

The following impact limiter reactions are obtained from Energy*Solutions* Document ST-625 (Reference 2-14).

Cold Conditions	$= 5.359\times10^6$ lb	(Table 3 and Figure 31 of Reference 2-14)
Hot Conditions	$= 4.427\times10^6$ lb	(Table 3 and Figure 35 of Reference 2-14)

The maximum of the two reactions is conservatively used for the analyses of all environmental conditions. The impact limiter reaction is converted to the rigid body acceleration by dividing the reaction by that portion of the mass of the package which causes this reaction. During the end drop test the impact limiter reaction is caused by the total mass of the package less the mass of one impact limiter, i.e. 49,300 + 14,680 + 4,860 = 68,840 lb (SAR Section 2.1.3). Since the FEM represents only ½ of the package, the total mass is divided by 2 in the calculation of the rigid body acceleration.

Rigid body acceleration = $2\times5.359\times10^6/68{,}840 = 155.7$ » Use 160g

The value used for rigid body acceleration is conservatively set at 160g. The distribution of reactions and inertia loads used in the quasi-static FEM analyses are shown in Figure 2-37. The plot of the maximum stress intensities in the cask are shown in Figures 2-38 for the hot condition, in Figure 2-39 for the cold condition (maximum decay heat), and in Figure 2-40 for the cold condition (no decay heat). The results obtained from the detailed FEM analysis of the cask are presented in Tables 2-18 and 2-19 for the hot and cold combinations, respectively.

Of all components, a minimum safety factor of 1.02 is computed for the loading combinations involving end drop.

2.7.1.2 Side Drop

The following impact limiter reactions are obtained from Energy*Solutions* Document ST-625 (Reference 2-14).

Cold Conditions = 3.937×10^6 lb (Table 3 and Figure 39 of Reference 2-14)

Hot Conditions = 3.403×10^6 lb (Table 3 and Figure 43 of Reference 2-14)

Conservatively use the maximum of the two reactions for the analyses of all environmental conditions. The impact limiter reaction is converted to the rigid body acceleration by dividing the reaction by that portion of the mass of the package which causes this reaction. During the side drop test the impact limiter reaction is caused by the total mass of the package less the mass of the two impact limiters, i.e. 74,000 - 2×4,860 = 64,280 lb (Section 2.1.3). Since the FEM represents only ½ of the package the total mass is divided by 2 in the calculation of the rigid body acceleration.

Rigid body acceleration = $2\times3.927\times10^6/64{,}280 = 122.2$g » Use 150g

The value used for the rigid body acceleration is conservatively set at 150g. The distribution of reactions and inertia loads used in the quasi-static FEM analyses are shown in Figure 2-41. The plot of the maximum stress intensities in the cask are shown in Figures 2-42 for the hot condition, in Figure 2-43 for the cold condition (maximum decay heat), and in Figure 2-44 for the cold condition (no decay heat). The results obtained from the detailed FEM analysis of the cask are presented in Tables 2-20 and 2-21 for the hot and cold combinations, respectively.

The minimum safety factor of 1.05 is computed for the loading combinations involving side drop. This minimum safety factor occurs in the lid bolts. Of all components, a minimum factor of safety on the containment boundary components is 1.05.

2.7.1.3 Corner Drop

The following impact limiter reactions are obtained from Energy*Solutions* Document ST-625 (Reference 2-14).

Cold Conditions $= 2.103\times10^6$ lb (Table 3 and Figure 47 of Reference 2-14)

Hot Conditions $= 2.000\times10^6$ lb (Table 3 and Figure 51 of Reference 2-14)

Conservatively use the maximum of the two reactions for the analyses of all environmental conditions. The impact limiter reaction is converted to the rigid body acceleration by dividing the reaction by that portion of the mass of the package which causes this reaction. During the corner drop test the impact limiter reaction is caused by the total mass of the package less the mass of one impact limiter, i.e. 49,300 + 14,680 + 4,860 = 68,840 lb (Section 2.1.3). Since the FEM represents only ½ of the package, the total mass is divided by 2 in the calculation of the rigid body acceleration.

Rigid body acceleration $= 2\times2.103\times10^6/68{,}840 = 61.1$ » Use 75g

The value used for rigid body acceleration is conservatively set at 75g. The distribution of reactions and inertia loads used in the quasi-static FEM analyses are shown in Figure 2-45. The plot of the maximum stress intensities in the cask are shown in Figures 2-46 for the hot condition, in Figure 2-47 for the cold condition (maximum decay heat), and in Figure 2-48 for the cold condition (no decay heat). The results obtained from the detailed FEM analysis of the cask are presented in Tables 2-22 and 2-23 for the hot and cold combinations, respectively.

Of all components, a minimum safety factor of 1.01 is computed for the loading combinations involving corner drop.

2.7.1.4 Oblique Drop

The diameter of the 8-120B package impact limiter is 102 inches and the overall package height is 132 inches. The following analysis indicates that for the 8-120B package with the diameter approximately equal to its length, there is no slapdown effect. That is, the impact is not more severe than a side drop.

This section represents an analysis demonstrating that oblique impacts are not worst-case for casks having length-to-diameter ratios less than 1.37. Figure 2-49 illustrates a cask of length (l), and weight (W), dropped at an angle (a) measured from the horizontal plane. No energy absorption is initially assumed from the impact limiter of cask during primary impact (first contact of the lower end of the cask with the impact surface). This assumption results in the worst case (greatest) impact velocity of the higher end of the cask.

The angular momentum before and after impact can be estimated based on the following assumptions:

- The impact point does not slide along the horizontal impact surface.
- The rotational inertia of the cask can be approximated assuming a uniform density solid cylinder, i.e. : $I_{CG} = \frac{1}{4}\times M\times\left(r^2+\frac{l^2}{3}\right)$
- The gravitational acceleration of the cask is neglected after the initial impact.

Then, before impact,

$$L_1 = M \times \mathrm{v}_1 \times \left(\frac{1}{2} \times l - r \times \tan \mathrm{a}\right) \times \cos \mathrm{a}$$

And, after impact:

$$L_2 = I_i \times \omega_2$$

Where:

L_1 = angular momentum before impact

M = mass of cask

v_1 = impact velocity

I_i = rotational inertia of cask about impact point

$$= I_{CG} + M \times R^2$$

$$= M \times \left(\frac{1}{4} \times r^2 + \frac{1}{12} \times l^2 + R^2\right)$$

ω_2 = angular velocity of cask following impact

Since no moments are applied to the cask, angular momentum is conserved, and $L_1 = L_2$:

$$M \times \mathrm{v}_1 \times \left(\frac{1}{2} \times l - r \times \tan \mathrm{a}\right) \times \cos \mathrm{a} = M \times \left(\frac{1}{4} \times r^2 + \frac{1}{12} \times l^2 + R^2\right) \times \omega_2$$

Solving for angular velocity:

$$\omega_2 = \mathrm{v}_1 \times \frac{\left(\frac{1}{2} \times l - r \times \tan \mathrm{a}\right) \times \cos \mathrm{a}}{\frac{1}{4} \times r^2 + \frac{1}{12} \times l^2 + R^2}$$

In general, maximum angular velocity occurs when the impact angle equals zero.
The velocity of the secondary impact is given by:

$$\mathrm{v}_S = l \times \omega_2$$

Then:

$$\mathrm{v}_S = l \times \mathrm{v}_1 \times \frac{\left(\frac{1}{2} \times l - r \times \tan \mathrm{a}\right) \times \cos \mathrm{a}}{\frac{1}{4} \times r^2 + \frac{1}{12} \times l^2 + R^2}$$

The limiting case can be taken as that for which the secondary impact velocity equals the initial impact velocity for the worst case angular velocity. Then,

$$v_S = v_1 \text{ at } a = 0$$

And:

$$\frac{\frac{1}{2}\times l^2}{\frac{1}{4}\times r^2 + \frac{1}{12}\times l^2 + R^2} = 1$$

From Figure 2-49,

$$R^2 = \frac{1}{4}\times l^2 + r^2$$

Therefore,

$$\frac{1}{2}\times l^2 = \frac{1}{4}\times r^2 + \frac{1}{12}\times l^2 + \frac{1}{4}\times l^2 + r^2$$

$$\frac{l^2}{r^2} = 7.50 \qquad and, \qquad \frac{l}{r} = 2.74$$

Implying that:

$$\frac{l}{d} = \frac{l}{2\times r} = 1.37$$

Thus, for length-to-diameter ratios greater than 1.37, slapdown impacts may be more severe than a normal side drop. Since this analysis very conservatively neglects any energy absorption of the initial impact, this ratio may be taken as a lower bound, below which one may safely assume that secondary impact will be less severe than side drop impacts. Since the 8-120B cask has a length-to-diameter ratio of 1.29, the oblique drop is less severe than the side drop. Cask stresses in an oblique drop will be less than those experienced during a side drop.

2.7.1.5 Lead Slump Evaluation

The 8-120B package experiences the largest acceleration during the end drop orientation. Analyses of the 8-120B package under various environmental conditions in this drop orientation have been performed in Section 2.7.1.1. The most severe environmental condition for the lead slump is the cold condition with no decay heat load. From the finite element model analysis the relative displacement at the lead-steel interface is obtained. Figure 2-50 shows the exaggerated displacement plot under this drop condition. The total relative displacement of the lead column (0.141 inch) is reported as the lead-slump. However, it should be noted that in considering this value to be the lead slump, the elastic recovery of the lead and steel has been conservatively neglected.

2.7.1.6 Impact Limiter Attachment Evaluation

The impact limiter attachment loads for each drop condition are obtained from the FEM analyses described in Section 2.7.1. These loads are presented in Table 2-24. The maximum load in an individual attachment under any of the HAC events is 35,350 lb (Energy*Solutions* document ST-625, Reference 2-14). The following evaluation shows that the impact limiter attachments are capable of withstanding this load. Each impact limiter attachment point is fabricated from ASTM A516 Grade 70 material.

Considering failure for an equivalent state of stress which produces a maximum shear stress of:

$$\tau_{failure} = \frac{F_u}{\sqrt{3}} = \frac{70{,}000}{\sqrt{3}} = 40{,}415\,\text{psi}$$

The impact limiter attachment eye tear-out stress is:

$$\tau = \frac{35{,}350}{2\times 0.5\times(2-0.5\times 0.9375)} = 23{,}086\ \text{psi} < 40{,}415\ \text{psi} \qquad \text{O.K.}$$

Each impact limiter attachment is welded on to the 1" thick inner ring of impact limiter with 6" long ½" fillet weld on each side and to the impact limiter skin with smaller size fillet weld. Ignoring any contribution from the impact limiter skin welds, the weld shear stress is:

$$\tau = [(\frac{35{,}350\times(2.875-1)}{\frac{6^2}{3}\times 0.707\times 0.5})^2 + (\frac{35{,}350}{2\times 6\times 0.707\times 0.5})^2]^{0.5} = 17{,}708\ \text{psi} < 40{,}415\ \text{psi} \qquad \text{O.K.}$$

The top and bottom impact limiters are interconnected at eight attachment points with 1" diameter shank ratchet binders. The ratchet binder has a working load limit of 9,000 lbs with ultimate load equal to 5 times the working load limit = 9,000×5 = 45,000 lbs

Maximum attachment point load = 35,350 lbs < 45,000 lbs O.K.

Therefore, the impact limiter attachments can withstand the maximum applied load under any of the HAC events.

2.7.1.7 Shell Buckling

Buckling, per Regulatory Guide 7.6 (Reference 2-3), is an unacceptable failure mode for the containment vessel. The intent of this guideline is to make large deformations unacceptable because they would compromise the validity of linear assumptions and quasi-linear allowable stresses as given in Paragraph C.6 of NRC Regulatory Guide 7.6.

The remainder of this subsection defines techniques and criteria used in subsequent sections of this Safety Analysis Report to demonstrate that containment vessel buckling does not occur.

<u>Euler Column Buckling</u>

From Reference 2-23, p. 104, the critical axial buckling load for a self-weight load combined with an added axial force is:

$$P_{cr} = \frac{m\times E\times \mathrm{I}}{l^2}$$

Where:

m = tabulated function of n

$$n = \frac{4\times \mathrm{q}\times l^3}{\pi^2\times E\times \mathrm{I}}$$

q = distributed axial load intensity
$= 2 \times \pi \times R \times \mathrm{w} \times \mathrm{a} \times \mathrm{t}$

l = half length of cylinder

E = Young's modulus = 27.8 x 10^6 psi

$\mathrm{I} = \pi \times R^3 \times t$
R = cylinder radius

t = cylinder thickness

w = weight density = 0.283 lb/in^3

a = acceleration in g's

This mode of buckling applies to the outer shell of the cask, composed of a $1\frac{1}{2}$-inch thick plate.

$l = 39.25$ in.

R = 35.5 in.

t = 1.5 in.

I = 210,827 in^2

q = 94.69a lb/in.

And:

$\mathrm{n} = 3.96 \times 10^{-7} \times \mathrm{a}$

For:

a = 169

n = 0

Therefore:

$$\mathrm{m} = \frac{\pi^2}{4}$$

And:

$P_{cr} = 9.4 \times 10^9$ lb.

Axial Stress Limits

According to Reference 2-24, p. 230, a thin-wall cylinder is considered "moderately long" if

$$c \times Z > \frac{\pi^2 \times K_{co}}{2\sqrt{3}}$$

Where:

c = correlation factor dependent on R/t

$$Z = \frac{L^2}{R \times t} \times \sqrt{1 - m^2}$$

K_{co} = 1 for simply supported edges (conservative)

L = length of cylinder

R = mean radius of cylinder

t = wall thickness

m = Poisson's ratio

The following two sets of properties correspond to the inner and outer shells of the cask sidewall.

Inner Shell			Outer Shell		
t_i	=	0.75 in	t_o	=	1.5 in
R_i	=	31.375 in	R_o	=	35.5 in
L_i	=	76 in	L_o	=	79.5 in
m	=	0.3	m	=	0.3

For both shells,

$$\frac{\pi^2 \times K_{co}}{2\sqrt{3}} = 2.849$$

Then:

$R_i/t_i = 41.83$

$R_o/t_o = 23.67$

$Z_i = 234$

$Z_o = 113$

From Reference 2-24, Fig. 10-9, p. 230.

$c_i = 0.70$

$c_o = 0.55$

For both shells,

$$c \times Z > \frac{\pi^2 K_{co}}{2\sqrt{3}}$$

Therefore, both will be treated as moderately long cylinders.

From Reference 2-24, p. 229:

$$\sigma_c = \frac{\pi^2 \times K_c \times E}{12 \times (1 - m^2)} \times \left(\frac{t}{L}\right)^2$$

σ_c = elastic buckling stress

E = Young's modulus
= 27.8×10^6 psi

$$\sigma_c = \frac{4\sqrt{3}}{\pi^2} \times c \times Z$$

σ_{ci} = 281,353 psi

σ_{co} = 390,240 psi

Hoop Stress Limits

From Reference 2-24, p. 236:

$$\sigma_c = \frac{\pi^2 \times K_p \times E}{12 \times (1 - m^2)} \times (t / L)^2$$

Where:

K_p = function of Z (Reference 2-24, Fig. 10-15, p. 237)

Then:

$K_{pi} = 13$
$K_{po} = 9$
σ_{ci} = 31,810 psi
σ_{co} = 80,503 psi

Critical Buckling Stress

σ_{cr} for the above cases can be found by solving the following equation (from Reference 2-24, p. 265):

$$\sigma_{cr} - \eta \times \sigma_c = 0$$

Where:

η = plasticity coefficient

The plasticity coefficient, η, is defined by the following equations for each of the various loading conditions:

For axial stresses, from Reference 2-24, p. 266:

$$\eta = \frac{\sqrt{E_s \times E_t}}{E}$$

For external pressure stress, from Reference 2-24, p. 236:

$$\eta = \frac{E_s}{E_t}\sqrt{\left(\frac{E_t}{E_s}\right)^{1/2} \times \left(\frac{1}{4} + \frac{3}{4} \times \frac{E_t}{E_s}\right)}$$

Where:

E_t = tangent modulus = $d\sigma/d\varepsilon$

E_s = secant modulus = σ / ε

σ = stress

ε = strain

For stresses below the proportional limit, conservatively assumed to be $0.7 \times S_y$:

$E = E_t = E_s$

and $\eta = 1$

For stresses above the proportional limit, stress is assumed to be a parabolic function of strain that is tangent to the elastic line at the proportional limit and has zero slope at the yield stress.

For:

S_y = 38,000 psi

and:

$E = 27.8 \times 10^6$ psi

Then, for:

$0.7 \times S_y < \sigma < S_y$

$\sigma = A \times \varepsilon^2 + B \times \varepsilon + C$

Where:

$A = -1.6948 \times 10^{10}$

$B = 6.0233 \times 10^7$

$C = -1.5517 \times 10^4$

Using this expression for stress, the critical buckling stress equation is solved:

$$A^2 \times \varepsilon_{cr}^5 + 2AB \times \varepsilon_{cr}^4 + \left[2AC + B^2 - 2A^2\left(\frac{\sigma_e}{E}\right)^2\right] \times \varepsilon_{cr}^3 + \left[2BC - 3AB\left(\frac{\sigma_e}{E}\right)^2\right] \times \varepsilon_{cr}^2$$
$$+ \left[C^2 - \left(\frac{\sigma_e}{E}\right)^2 \left(2AC + B^2\right)\right] \times \varepsilon_{cr} - BC\left(\frac{\sigma_e}{E}\right)^2 = 0$$

	Axial:	
	Inner	Outer
ε_{cr}	1.7578×10^{-3}	1.7670×10^{-3}
η	0.13504	9.73727
σ_{cr}	37,994 psi	37,999 psi
	Hoop:	
ε_{cr}	1.0678×10^{-3}	1.5710×10^{-3}
η	0.91158	0.43138
σ_{cr}	28,997 psi	34,727 psi

The buckling stress limits are summarized in the following table

	Inner Shell	Outer Shell
Axial Membrane	37,994 psi	37,999 psi
Hoop Membrane	28,997 psi	34,727 psi

Evaluation of buckling of the cylindrical shells, for combined loading, is done using the technique described in Reference 2-24, p. 275:

$$\sigma_{cr} - \eta \times \sigma_i = 0$$

Where:

σ_{cr} = combined load critical buckling stress intensity

η = plasticity correction factor $= \dfrac{\sqrt{E_t \times E_s}}{E}$

σ_i = elastic buckling stress intensity $= \sqrt{\sigma_a^2 + \sigma_h^2 - \sigma_a \sigma_h}$

σ_a = elastic axial buckling stress limit

σ_h = elastic hoop buckling stress limit

Values for the inner and outer shells are as follows:

	Inner	Outer
σ_a, psi	281,353	390,240
σ_h, psi	31,810	80,503
σ_i, psi	266,874	356,865
η	0.14236	0.10648
σ_{cr} (combined load)	37,993	37,998

In evaluating stress conditions for buckling of the shells, the individual stress components are compared to the allowable buckling stresses in the hoop and axial directions. The stress intensities are compared to the values of σ_{cr} above for combined loading.

Evaluation

Evaluation of the 8-120B Cask body is performed for buckling under the NCT and HAC events. The two components that have the highest susceptibility to buckling are the inner and outer shells of the cask. Both the shells are subjected to axial compressive stresses under the 1-ft and 30-ft drop tests. In addition, the inner shell undergoes compressive hoop stress under the cold conditions. The coefficient of thermal expansion of the lead is much larger than that of the steel. The lead is poured in the cask body at the room temperature (70°F). At a temperature lower than 70°F, the lead shrinks more than the steel which causes an interference stress in the inner shell.

Stresses are calculated for the NCT and HAC conditions and compared with the buckling stresses calculated above. The axial stresses are calculated for the 1-ft drop test for the NCT conditions and 30-ft drop for the HAC conditions. The hoop stress in the inner shell is calculated at -40°F and is conservatively used for both NCT and HAC conditions.

Axial Stress Calculation

The axial stresses in inner and outer shells are calculated with the conservative assumption that the entire reaction load under a particular end drop test is reacted entirely by these shells.

Inner shell outside radius = 31.75 in

Inner shell inside radius = 31 in

Outer shell outside radius = 36.6 in

Outer shell inside radius = 35.1 in

Area of the two shells,

$$\text{Area} = \pi\times[(31.75^2 - 31^2) + (36.6^2 - 35.1^2)] = 485.7 \text{ in}^2$$

Largest reaction under the 1-ft drop test on the half model is 1.556×10^6 lb (see Section 2.6.7.1). Therefore the axial stress in the shells under this loading is:

$$\sigma_{axial} = 2\times1.556\times10^6/485.7 = 6{,}407 \text{ psi}$$

Largest reaction under the 30-ft drop test on the half model is 5.359×10^6 lb (see Section 2.7.1.1). Therefore the axial stress in the shells under this loading is:

$$\sigma_{axial} = 2\times5.359\times10^6/485.7 = 22{,}067 \text{ psi}$$

Using a safety factor of 2 for NCT and 1.34 for the HAC tests, the factored axial stresses are as follows:

NCT $F.S.\times \sigma_{axial} = 2\times6{,}407 = 12{,}814$ psi

HAC $F.S.\times \sigma_{axial} = 1.34\times22{,}067 = 29{,}570$ psi

<u>Hoop Stress Calculation</u>

Hoop stresses are calculated in the inner shell using the closed-form solutions from Roark and Young (Reference 2-26).

Inner shell mean radius = 31.375 in

Inner shell thickness = 0.75 in

Lead column mean radius = 33.425 in

Lead column thickness = 3.35 in

Shell-lead interface radius = 31.75 in

Coefficient of thermal expansion of lead at -40°F = 15.65×10^{-6} in/in-°F

Coefficient of thermal expansion of steel at -40°F = 6.4×10^{-6} in/in-°F

Elastic Modulus of lead at -40°F = 2.46×10^6 psi

Elastic Modulus of steel at -40°F = 30×10^6 psi

Differential thermal expansion at the steel-lead interface,

$$\Delta_{diff} = 31.75\times(15.65–6.4)\times10^{-6}\times(70+40) = 0.0323 \text{ in}$$

Assuming that the interface pressure is q, the radial deformation of the steel shell and lead column is calculated based on the formulas from Reference 2-26 as follows:

$$\Delta_{steel} = q\times31.375^2/(30\times10^6\times0.75)$$

$$\Delta_{lead} = q\times33.425^2/(2.46\times10^6\times3.35)$$

Equating the sum of these deformations with the differential thermal expansion, we get

$$q\times[31.375^2/(30\times10^6\times0.75)+ 33.425^2/(2.46\times10^6\times3.35)] = 0.0323$$

or, $q = 180.12$ psi

The hoop stress in the inner shell under this pressure is:

$$\sigma_{hoop} = 180.12\times31.375/0.75 = 7{,}535 \text{ psi}$$

Using a safety factor of 2 for NCT and 1.34 for the HAC tests, the factored hoop stresses are as follows:

NCT $F.S.\times \sigma_{hoop} = 2\times7{,}535 = 15{,}070$ psi

HAC $F.S.\times \sigma_{hoop} = 1.34\times7{,}535 = 10{,}097$ psi

Since the maximum of above inner shell stresses (15,070 psi) is less than the combined load critical buckling stress intensity (37,993 psi) calculated earlier in this Section, and the thinner inner shell (0.75 inches) stresses envelope that of the outer shell (1.50 inches thick), therefore the 8-120B cask buckling will not occur.

2.7.1.8 Vent Port Evaluation

The 8-1200B package has one penetration through the containment boundary that is closed with a bolt. This is the vent port. The vent port is recessed into the cask lid. The vent port is completely covered by the foam of the impact limiter. Therefore, during the HAC drop tests the vent port does not make contact with the impact surface.

2.7.1.9 Closure Bolt Evaluation

The primary and secondary lid bolt stresses under various loading combinations that were obtained from the FEM analyses have been provided in the appropriate sections of the SAR. They have been compared with the corresponding design allowable values and typically show that a large factor of safety exists in the design of the bolts under all loading combinations. For the 30-ft side and corner drop loadings the primary lid bolt stresses were calculated using the approach shown in Section 7.3 of Energy*Solutions* document ST-627 (Reference 2-15) presented below.

The individual loads for the primary lid bolts are given in Tables 19 through 30 of Energy*Solutions* document ST-627 (Reference 2-15). Loads are calculated at two locations where the highest stresses occur; the root of the bolt shank and the lid interfaces.

Locations of bolts on the primary lid are identified by angle according to Energy*Solutions* document ST-627 (Reference 2-15). Maximum stresses in the bolts by location during the corner and side drops are shown in Figures 48 and 49 of Energy*Solutions* document ST-627 (Reference 2-15).

Below is a sample calculation for the bolt stresses from the tabulated FEM data. A sample of bolt load data from the FEM as given in Tables 19 through 30 of Energy*Solutions* document ST-627 (Reference 2-15) is below:

Load	FX	FY	FZ	MX	MY	MZ
	lbs	lbs	lbs	in-lbs	in-lbs	in-lbs
bolt4	-114,222	-4,322	-70,317	-3,492	-92,463	-2,618

$$F_{Axial} = FZ = 70{,}317 \text{lbs}$$

$$V_{Shear} = \sqrt{(FX)^2 + (FY)^2} = \sqrt{114{,}222^2 + 4{,}322^2} = 114{,}304 lbs$$

$$M = \sqrt{(MX)^2 + (MY)^2} = \sqrt{3{,}492^2 + 92{,}463^2} = 92{,}529 in\text{-}lbs$$

T = MZ= -2,618 in-lbs (Neglected)

The bolts are 2" - 8 UN:

Bolt diameter = d_{bolt} = 2.0 in

Bolt area = $A_{stress\,area}$ = 2.7665 in^2

$$\sigma_{axial} = \frac{F_{axial}}{A_{stress\,area}} = \frac{F_{axial}}{2.7665} = \frac{70{,}317}{2.7665} = 25{,}417 \text{ psi}$$

Allowable bolt axial (average) stress = Allowable membrane stress = 105,000 psi (per Table 2-2)

$$\sigma_{axial} = \sigma_{average} = 25{,}417 \text{ psi} < 105{,}000 \text{ psi}$$ O.K.

$$\sigma_{bending} = \frac{M}{S} = \frac{M}{\frac{\pi \times d^3{}_{bolt}}{32}} = \frac{32 \times 92{,}529}{\pi \times 2^3} = 117{,}812 \text{ psi}$$

$$\tau = \frac{V_{shear}}{A_{stress\,area}} = \frac{114{,}304}{2.7665} = 41{,}317 \text{ psi}$$

Allowable bolt shear stress = Smaller of ($0.42S_u$ and $0.6S_y$) = 63,000 psi

$$\tau = 41{,}317 \text{ psi} < 63{,}000 \text{ psi}$$ O.K.

$$\sigma_{axial+bending} = \sigma_{axial} + \sigma_{bending} = 25{,}417 + 117{,}812 = 143{,}229 \text{ psi}$$

Allowable membrane + bending stress = 150,000 psi (per Table 2-2)

$$\sigma_{axial+bending} = 143{,}229 \text{ psi} < 150{,}000 \text{ psi}$$ O.K.

Bolt axial-shear interaction (I.C.) is:

$$\text{I.C.} = \left(\frac{\sigma_{axial}}{105{,}000}\right)^2 + \left(\frac{\tau}{63{,}000}\right)^2 = \left(\frac{25{,}417}{105{,}000}\right)^2 + \left(\frac{41{,}317}{63{,}000}\right)^2 = 0.4887 < 1.0 \qquad \text{O.K.}$$

Therefore, bolt design meets the design criteria established in Section 2.1.2.

Additionally, it is shown that under NCT loading conditions, the bolt torque provides sufficient preload in the bolts to overcome the loading arising from the thermal and pressure loadings. It is also shown that the minimum engagement length requirement for the specified bolts and the bolting ring material is also satisfied.

Lid Bolt Torque Evaluation

In order to maintain the seal during the NCT, the 8-120B package primary and secondary lid bolts are tightened to a torque value of 500 ± 50 ft-lbs (lubricated). Under the NCT loading combinations listed in Table 2-1, the largest bolt loads are experienced due the loading of minimum external pressure, under which the package is subject to an internal pressure of 50 psig. The lid and bolting ring (ASTM A516 Grade 70) and bolt (ASTM A354 Grade BD) are fabricated from different material that have the same coefficient of thermal expansion (Table 2-4). The seal plate is made from ASTM A240 Type 304L with a higher coefficient of thermal expansion (Table 2-4). These components expand different amounts during the hot and cold environments. Therefore, in the cold environment the seal plate contracts more and as a result the bolts experience a loss of tension due to this relative expansion. The amount of loss of tension is conservatively calculated as follows:

Assume that the joint temperature is -40°F. Coefficient of thermal expansion of the seal plate material from Table 2-4 at 70°F is 8.5×10^{-6} in/(in °F) and for bolt and lid materials is 6.4×10^{-6} in/(in °F).

Primary Lid Bolts

Required Torque Calculation:

The effective length of the bolt for this relative expansion is the distance between the bolt-head to the top of the bolting ring (L) is:

L = 1.625" Primary lid + 0.25" washer + 0.25" seal plate = 2.125 in

The relative expansion of the bolt and seal ring is:

$\delta = 0.25\times(8.5\text{-}6.4)\times10^{-6}\times(-40\ -70) = -5.775\times10^{-5}$ in

Young's Modulus for the bolting material at 70°F is 29.2×10^{6} psi. Therefore, the loss of bolt stress due to relative thermal expansion is:

$\sigma_{thermal} = 29.2\times10^{6}\times5.775\times10^{-5}/2.125 = 794$ psi

For 2" diameter bolts, the preload lost is:

$F_{thermal} = \pi/4\times2^2\times794 = 2{,}495$ lb

The Maximum internal pressure of the package is 50 psi, which occurs under minimum external pressure load combinations (see Table 2-1). For the total 20 primary lid bolts, the average bolt load under this pressure is:

$F_{p\text{-}avg} = \pi \times (31\frac{7}{16})^2 \times 50/20$ $\quad (31\frac{15}{16} - \frac{1}{2} = 31\frac{7}{16}''$ is the radius of inner seal)

$= 7{,}762$ lb

The total required preload is:

$F_{preload} = 2{,}495 + 7{,}762 = 10{,}257$ lb

Using the customary torque equation,

$T = K \times D \times F$

Where, T = torque

K = nut factor = 0.1 for lubricated condition

D = nominal diameter of the bolt = 2.0″

F = preload

The required torque is:

$T = 0.1 \times 2.0 \times 10{,}257 = 2{,}052$ in-lb = 171 ft-lb

Therefore, the specified torque of 500 ± 50 ft-lb (lubricated) is sufficient to maintain the needed bolt preload for the NCT loading.

Bolt Engagement:

The 2"-8UN, Class 2A bolts are installed though 2" long threaded inserts which develop strengths equal or greater than that of the bolt.

<u>Secondary Lid Bolts</u>

Required Torque Calculation:

The effective length of the bolt for this relative expansion is the distance between the bolt-head to the top of the primary lid (L') is:

L' = 2.1875" Secondary lid + 0.25" washer = 2.4375"

For a 3/8" thick seal plate, the relative expansion of the bolt and seal ring is:

$\delta = (0.375 \times (8.5\text{-}6.4) \times 10^{-6}) \times (-40\ -70) = -8.6625 \times 10^{-5}''$

Young's Modulus for the bolting material at 70°F is 29.2×10^6 psi. Therefore, the loss of bolt stress due to relative thermal expansion is:

$\sigma_{thermal} = 29.2 \times 10^6 \times 8.6625 \times 10^{-5}/2.4375 = 1{,}038$ psi

For 2" diameter bolts, the preload lost is:

$F_{thermal} = \pi/4 \times 2^2 \times 1{,}038 = 3{,}261$ lb

The Maximum internal pressure of the package is 50 psi, which occurs under minimum external pressure load combinations (see Table 2-1). For the total 12 secondary lid bolts, the average bolt load under this pressure is:

$F_{p\text{-}avg} = \pi \times (14\frac{13}{16})^2 \times 50/12$ $\quad (0.5\times 28\frac{3}{4} + 0.5\times 1\frac{7}{8} - \frac{1}{2} = 14\frac{13}{16}''$ is the radius of inner seal)

$= 2{,}872$ lb

The total required preload is:

$F_{preload} = 3{,}261 + 2{,}872 = 6{,}133$ lb

Using the customary torque equation,

$T = K \times D \times F$

Where, T = torque

K = nut factor = 0.1 for lubricated condition

D = nominal diameter of the bolt = 2.0″

F = preload

The required torque is:

$T = 0.1\times 2.0\times 6{,}133 = 1{,}227$ in-lb = 102 ft-lb

Therefore, the specified torque of 500 ± 50 ft-lb (lubricated) is sufficient to maintain the needed bolt preload for the NCT loading.

Bolt Engagement:

The 2"-8UN, Class 2A bolts are installed though 2" long threaded inserts which develop strengths equal or greater than that of the bolt.

2.7.2 Crush

Not applicable; the package weighs more than 1,100 lb, and its density is larger than 62.4 lb/ft^3.

2.7.3 Puncture

The Nelms puncture relation (Reference 2-20, Page 18) is given as:

$$t = (W/S)^{0.71}$$

Where:

t = shell thickness = 1 1/2 inches

W = cask weight, lbs.

S_u = ultimate tensile strength of outer shell
= 70,000 psi

The package weight causing puncture is:

$$W = S \times t^{1.4}$$

The corresponding weight to cause puncture of the 1-1/2 inch outer shell is:

$$W_s = 70{,}000 \times 1.5^{1.4} = 123{,}488 lbs.$$

The actual package weight is 74,000 lbs; therefore, the factor of safety for puncture resistance on an energy basis is:

$$F.S. = \frac{123{,}488}{74{,}000} = 1.67$$

When the package impacts the puncture pin, the force imposed upon the package is estimated as:

$$F_I = K_S \times A_I$$

K_s = Dynamic flow pressure of steel = 45,000 psi (Reference 2-20, Page 64)

R_c = Pin diameter = 6.0 inches

$$A_I = \frac{\pi}{4} \times (R_c)^2 = \frac{\pi}{4} \times (6.0)^2 = 28.27\ in.^2$$

$$\begin{aligned} F_I &= (45{,}000) \times (28.27) \\ &= 1.272 \times 10^6 lbs. \end{aligned}$$

This force induces a moment at the midsection of the package. The moment is estimated as:

$$M = \frac{F \times l}{8} = \frac{(1.272 \times 10^6) \times (88)}{8} = 13.99 \times 10^6 in\text{-}lb$$

Calculating the section properties of the outer shell at the midsection:

$$\begin{aligned} I &= \frac{\pi(d_o^4 - d_i^4)}{64} \\ &= \frac{\pi(73.2^4 - 70.2^4)}{64} = 2.172 \times 10^5\ in^4 \end{aligned}$$

Using these section properties gives a bending stress of:

$$S_b = \frac{M \times c}{I} = \frac{(13.99 \times 10^6) \times (36.6)}{2.172 \times 10^5} = \pm 2{,}357 psi$$

Conservatively assuming that the compressive and tensile stresses occur at the same location, the stress intensity is 4,714 psi and the factor of safety is:

$$F.S. = \frac{70{,}000}{4{,}714} = 14.8$$

To evaluate the ability of the cask to withstand puncture from a 40-inch end drop onto a 6-inch diameter pin, the end of the cask will be treated as two simply supported plates with a central load. Since the end is comprised of two 3.25-inch thick plates which must have identical deflections, the energy of the drop will be divided evenly between the two plates.

Reference 2-27, p. 415, gives the following equation for the deflection of a centrally loaded circular plate:

$$\frac{w_o}{h} + A \times \left(\frac{w_o}{h}\right)^3 = B \times \left(\frac{P \times a^2}{E \times h^4}\right)$$

Where:

w_o = deflection at center of plate, in.

h = plate thickness, in.

P = central load, lb.

E = Young's modulus, psi

a = plate radius, in.

A = 0.272 (simply supported plate, Ref. 2-29, p. 416)

B = 0.552 (simply supported plate, Ref. 2-29, p. 416)

The deformation energy can be found from:

$$u = \int_0^{\delta} P dw_o$$

$$= \frac{E \times h^4}{B \times a^2}\left[\frac{\delta^2}{2h} + \frac{A \times \delta^4}{4h^3}\right]$$

This can be equated to the drop energy, $\frac{W \times H}{2}$ to find the central deflection:

$$EhA\delta^4 + 2Eh^3\delta^2 - 2Ba^2WH = 0$$

$$\delta^2 = \frac{-2Eh^3 + \sqrt{\left(4E^2h^6 + 4EhA \times 2B\mathrm{a}^2WH\right)}}{2EhA}$$

$$\delta^2 = \frac{-2 + \sqrt{\left(4 + \frac{8AB\mathrm{a}^2WH}{Eh^5}\right)}}{\frac{2A}{h^2}}$$

For:

h = 3.25 in.

$E = 29 \times 10^6 \ psi$

a = 31 in.

W = 74,000 lb.

H = 40 in.

$$\delta^2 = \frac{-2 + \sqrt{\left(4 + \frac{8 \times 0.272 \times 0.552 \times 31^2 \times 74{,}000 \times 40}{29 \times 10^6 \times 3.25^5}\right)}}{\frac{2 \times 0.272}{3.25^2}} = 1.547 \ \mathrm{in}^2$$

Then:

$\delta = 1.244 \ in.$

Solving for the force required to produce this deflection yields a value:

$$\frac{1.244}{3.25} + 0.272 \times (\frac{1.244}{3.25})^3 = 0.552 \times (\frac{P \times 31^2}{29 \times 10^6 \times 3.25^4})$$

$P = 2.43 \times 10^6 \, lb$

However, using the dynamic flow pressure of the steel pin, the maximum force that can be exerted by the pin is given by:

$$F_{\max} = A_p \times \mathrm{K_s}$$

$$= \frac{\pi(6^2)}{4} \times 45{,}000$$

$$= 1.27 \times 10^6 \, lb.$$

This force will produce the maximum deflection of the plates

$$\delta = 0.669\ in.$$

Reference 2-27, p. 415, gives the following equations for the maximum membrane and membrane plus bending stresses:

Membrane:

$$\sigma_1 = \frac{\alpha \times E \times \delta^2}{a^2}$$

Membrane-plus-bending:

$$\sigma_2 = \frac{\beta \times E \times \delta \times h}{a^2}$$

For:

$$\alpha = 0.407 \quad \text{(Ref. 2-29, p. 416)}$$
$$\beta = 0.606$$

Then:

$$\sigma_1 = \frac{0.407 \times 29 \times 10^6 \times 0.669^2}{31^2}$$
$$\sigma_1 = 5{,}497\ psi.$$

$$\sigma_2 = \frac{0.606 \times 29 \times 10^6 \times 0.669 \times 3.25}{31^2}$$

$$\sigma_2 = 39{,}761\ psi.$$

The minimum factor of safety is:

$$F.S. = \frac{70{,}000}{39{,}761} = 1.76$$

Lead Shielding Deformation

After the puncture drop test the 8-120B cask may experience denting of the sidewall. The lead shielding behind the dent may experience a slight flattening which may result in a shielding loss in this region. A conservative evaluation of the maximum amount of lead deformation under puncture drop test of 8-120B cask has been performed in Reference 2-15. It has been shown that the lead shielding deformation is limited to 0.458 inch. This deformation is used in Section 5 for the shielding calculations.

2.7.4 Thermal

The thermal evaluation of the 8-120B package for the HAC fire test specified in 10 CFR 71.73(c)(4) has been performed in Section 3.4. It has been shown in the free drop analyses that the rupture of the impact limiter skin near the point of impact is possible. The polyurethane foam

is self-extinguishing and produces intumescent char when thermally degraded. The two impact limiters are assumed to provide thermal insulation.

Using the results of the thermal analysis of Section 3.4, structural evaluation of the package has been performed in this section. The finite element model described in Section 2.6 has been employed in the analyses. The details of the model, including the assumptions, modeling details, boundary conditions, and input and output data are included in the Energy*Solutions* document ST-637 (Reference 2-21).

2.7.4.1 Summary of Pressure and Temperatures

Based on the thermal analysis of the package during the HAC fire test, presented in Section 3.4, the maximum temperatures in various parts of the package are presented in Table 3-2 and plotted in Figure 3-12. These temperatures are summarized here as follows:

Fire Shield	= 1,392°F
Outer Shell	= 464.4°F
Inner Shell	= 295.5°F
Lead	= 295.8°F
Primary Lid Seal	= 212.4°F
Secondary Lid Seal	= 202.9°F

It should be noted that the maximum temperature in various components of the package occur at different time instants. The maximum temperature of the cask cavity during the entire HAC fires test and subsequent cool-down is 320.5°F as shown in Figure 17 of Energy*Solutions* document TH-028 (Reference 2-28). Conservatively 325°F temperature is used in Section 3.4.3 for calculating the maximum internal pressure of the package during the HAC fire test. The calculated internal pressure of the package during the HAC fire test is 155.0 psig.

2.7.4.2 Differential Thermal Expansion

The structural finite element model used for the analyses of the 8-120B package under HAC fire test uses temperature dependent material properties of the cask components. The differential thermal expansion of various components of the cask is automatically included in the stress evaluation of the package.

2.7.4.3 Stress Calculations

The stresses in the package under the HAC fire test have been calculated in Energy*Solutions* document ST-637 (Reference 2-21). The loading combination used for the HAC fire test is listed in Table 2-1. Table 2-25 presents the maximum stresses in various component of the package.

2.7.4.4 Comparison with Allowable Stresses

The stresses in the package under the HAC fire test are compared with their allowable values in Table 2-25. The allowable values in various components of the package are listed in Table 2-2. It is noticed from the comparison with the allowable values that all the components of the package experience stresses well below their allowable values. A minimum factor of safety of 1.73 occurs in the bolting ring.

2.7.5 Immersion – Fissile material

Not applicable for 8-120B package; since it does not contain fissile material.

2.7.6 Immersion – All packages

All the Type-B packages are required to meet the water immersion test specified in 10 CFR 71.73(c)(6). According to which, an undamaged package must be subjected to a pressure of 21.7 psig.

The package has been analyzed for an increased external pressure of 25 psig in Section 2.6.4. Therefore, the stresses presented in that section envelope those that will arise due to the immersion test.

2.7.7 Deep Water Immersion Test

Not applicable; 8-120B package does not contain irradiated nuclear fuel.

2.7.8 Summary of Damage

It has been demonstrated by several analyses performed in Section 2.7 that the 8-120B package can withstand the HAC test, specified in 10 CFR 71.73, including the free drop, puncture and fire. During these drop tests the protective impact limiters may undergo some damage, which is summarized as follows:

- During the HAC drop tests, the impact limiter skin may buckle and/or rupture in the vicinity of impact. The rupture may expose a portion of the polyurethane foam that is contained inside the steel skin.
- During the puncture drop test on the sidewall of the package, the fire-shield which is designed to have a separation from the outer shell, may come in contact with the outer shell due to deformation of the helically wound wire. The loss of separation will only be in the close vicinity of the puncture bar end. This will decrease the thermal resistance in that local area. The temperature there may increase slightly from those calculated for the intact package. In the area of the outer shell surface, the temperatures are well within the acceptable value. No unacceptable stress increase is expected because of slight increase in the local temperature.
- During the puncture drop test on the impact limiters, the outer steel skin will deform significantly due to large compression of polyurethane foam at the impact point. This may expose a portion of the polyurethane foam that is contained inside the steel skin. The seating surface of the impact limiters, which includes the impact limiter attachments, will remain intact as shown in the analysis. Therefore, during the HAC fire test, the impact limiters will provide thermal insulation with a reduced efficiency. The temperature in the critical components of the cask will not vary significantly.
- Puncture drop test will not cause a direct impact with any of the port closure plates.

Based on the assessment of the above damage it is concluded that the 8-120B package can safely withstand the HAC free drop, puncture, and fire tests performed in sequence. The package structural components under these drop tests have been shown to meet the design criteria set forth in Section 2.1.2.

2.8 ACCIDENT CONDITIONS FOR AIR TRANSPORT OF PLUTONIUM

Not applicable for 8-120B package since it is not transported by air.

2.9 ACCIDENT CONDITIONS FOR FISSILE MATERIAL PACKAGES FOR AIR TRANSPORT

Not applicable for 8-120B package since it is not transported by air.

2.10 SPECIAL FORM

Not applicable for 8-120B package since the package contents are not limited to special form.

2.11 FUEL RODS

Not applicable for 8-120B package; since the contents do not include fuel rods.

2.12 APPENDIX

2.12.1 List of References

(2-1) Code of Federal Regulations, Title 10, Part 71, Packaging and Transportation of Radioactive Material.

(2-2) U.S. NRC Regulatory Guide 7.8, Revision 1, Load Combinations for the Structural Analysis of Shipping Casks for Radioactive Material, March 1989.

(2-3) U.S. NRC Regulatory Guide 7.6, Revision 1, Design Criteria for the Structural Analysis of Shipping Cask Containment Vessels, 1978.

(2-4) ASME Boiler & Pressure Vessel Code, American Society of Mechanical Engineers, New York, NY, 2001.

(2-5) Energy*Solutions* Proprietary Document ST-551, Revision 3, Validation of the LS-DYNA Drop Analyses Results with the Test Data.

(2-6) U.S. NRC Regulatory Guide 7.11, Fracture Toughness Criteria of Base Material for Ferritic Steel Shipping Cask Containment Vessel with a Maximum Wall Thickness of 4 inches (0.1 m), June 1991.

(2-7) NUREG/CR-3854, Fabrication Criteria for Shipping Containers, March 1985.

(2-8) NUREG 0481/SAND77-1872, An Assessment of Stress-Strain Data Suitable for Finite Element Elastic-Plastic Analysis of Shipping Containers, Sandia National Laboratories, 1978.

(2-9) General Plastics Manufacturing Company, Last-A-Foam FR-3700 for Crash & Fire Protection of Nuclear Material Shipping Containers, June 1997.

(2-10) NUREG/CR-3019, Recommended Welding Criteria for Use in the Fabrication of Shipping Containers for Radioactive Material, March 1985.

(2-11) ANSYS/LS-DYNA, Computer Software, Version 12.1, ANSYS Inc., Canonsburg, PA, 2009.

(2-12) Code of Federal Regulations, Title 49, Part 393, Parts and Accessories Necessary for Safe Operation.

(2-13) Energy*Solutions* Document ST-626, Revision 0, Structural Analyses of the 8-120B Cask under Normal Conditions of Transport.

(2-14) Energy*Solutions* Proprietary Document ST-625, Revision 0, Drop Analyses of the 8-120B Cask Using LS-DYNA Program.

(2-15) Energy*Solutions* Document ST-627, Revision 1, Structural Analyses of the 8-120B Cask under Drop Conditions.

(2-16) Energy*Solutions* Document ST-608, Revision 0, 3-60B Cask ANSYS Finite Element Model Grid Convergence Study.

(2-17) Structural Analyses and Design of Nuclear Plant Facilities, ASCE Publication No. 58, American Society of Civil Engineers.

(2-18) NUREG/CR-1815, Recommendations for Protecting Against Failure by Brittle Fracture in Ferritic Steel Shipping Containers Up to Four Inches Thick, August 1981.

(2-19) An Introduction to the Design and Behavior of Bolted Joints, John H. Bickford, Marcel Dekker Inc., Publication, N.Y., 1981.

(2-20) Cask Designer's Guide, Shappert, L.B., ORNL-NSIC-68, Oak Ridge National Laboratory, 1970.

(2-21) Energy*Solutions* Document ST-637, Revision 0, Structural Analyses of the 8-120B Cask under Hypothetical Fire Accident Conditions.

(2-22) NUREG/CR-6407, Classification of Transportation Packaging and Dry Spent Fuel Storage System Components Accordance to Importance to Safety, February 1996.

(2-23) Theory of Elastic Stability, Timoshenko, Stephen P. and James M. Gere, Second Edition, McGraw-Hill Book Company, 1961.

(2-24) Structural Analysis of Shells, Baker, E.H., L. Kovalesky and F.L. Rish, Robert E. Krieger Publishing Co., 1981

(2-25) Energy*Solutions* Document ST-635, Revision 0, 8-120B Cask Regulatory Tie Down Evaluation

(2-26) Formulas for Stress and Strain, Roark, Raymond J. and Warren C. Young, Fifth Edition, McGraw Hill Book Company, 1975

(2-27) Theory of Plates and Shells, Timoshenko, S. and S. Woinowsky-Krieger, Second Edition, McGraw-Hill Book Company, 1959.

(2-28) Energy*Solutions* Document TH-028, Revision 1, Fire Transient Analyses of the 8-120B Cask Using Finite Element Models.

(2-29) Energy*Solutions* Document ST-596, Revision 1, 3-60B Cask ANSYS/LS-DYNA Model Sensitivity Analyses.

(2-30) Energy*Solutions* Document ST-618, Revision 1, Discourse on the Use of Foam Properties in the LS-DYNA Analyses of the Casks.

(page intentionally left blank)

(page intentionally left blank)

(page intentionally left blank)

(page intentionally left blank)

Table 2-1

Summary of Load Combinations for Normal and Accident Condition Loading

Loading Conditions	Ambient Temperature (°F)	Insolation	Heat Load (Watt)	Pressure (psi)		Stress Table[2] or Reference
				Internal	External	
NORMAL CONDITIONS[1]						
Hot Environment	100	✓	200	35		2-5
Cold Environment	-40		200	35		2-6
Increased External Pressure	-20		0		25	2-8
Minimum External Pressure	100	✓	200	50		2-7
Free Drop + Max. Internal Pressure	100	✓	200	35		2-10, 2-12 & 2-14
Free Drop + Min. Internal Pressure	-20		0		0	2-11, 2-13 & 2-15
ACCIDENT CONDITIONS[1]						
Free Drop + Max. Internal Pressure	100	✓	200	35		2-17, 2-19 & 2-21
Free Drop + Min. Internal Pressure	-20		0		0	2-18, 2-20 & 2-22
Puncture						Section 2.7.3
Fire	1475		200	155		2-24

Notes:

(1) These loading combinations have been derived from the NRC Regulatory Guide 7.8 (Reference 2-2).

(2) See these tables for the stress analysis results of the corresponding loading combinations.

Table 2-2

Allowable Stresses

Material →		ASTM A240 Type 304L	ASTM A516 Gr. 70	ASTM A354 Gr. BD
Yield Stress, S_y (psi)		25,000(1)	38,000(1)	130,000(1)
Ultimate Stress, S_u (psi)		70,000(1)	70,000(1)	150,000(1)
Design Stress Intensity, S_m (psi)		16,700(1)	20,000(1)	30,000(1)
Normal Conditions	Membrane Stress	16,700(2)	20,000 (2)	60,000(3)
	Mem. + Bending Stress	25,050(2)	30,000 (2)	90,000(3)
Hypothetical Accident Conditions	Membrane Stress	40,080(4)	48,000(4)	105,000(5)
	Mem. + Bending Stress	60,120(4)	70,000(4)	150,000(5)

Notes:

(1) From ASME B&PV Code 2001, Section II, Part D (Reference 2-4).

(2) Established from Regulatory Guide 7.6 (Reference 2-3), Position 2.

(3) Regulatory Guide 7.6 (Reference 2-3) does not provide any criteria. ASME B&PV Code, Section III, Subsection ND has been used to establish these criteria.

(4) Established from Regulatory Guide 7.6 (Reference 2-3), Position 6.

(5) Regulatory Guide 7.6 (Reference 2-3) does not provide any criteria. ASME B&PV Code, Section III, Appendix F has been used to establish these criteria.

Table 2-3

Stress Component Definition

	ASME Definition	8-120B Cask Incorporation
Primary (General) Membrane, P_m [RG 7.6, B-2 & B-4 WB-3213.6 & WB-3213.8]	Average primary stress across solid section. Excludes discontinuities and concentrations. Produced by pressure and mechanical loads.	The stresses caused by thermal expansion (contraction) are also included besides those caused by pressure and mechanical loading. The total stress over a section, *if meeting the allowable of membrane stress*, has been categorized as primary membrane. Otherwise, the stresses obtained from the FEA have been linearized to obtain the membrane component.
Primary Bending, P_b [RG 7.6, B-2 & B-4 WB-3213.7 & WB-3213.8]	Component of primary stress proportional to distance from centroid of solid section. Excluding discontinuities and concentrations. Produced by pressure and mechanical load.	The stresses caused by thermal expansion (contraction) are also included besides those caused by pressure and mechanical loading. The total stress over a section, *if meeting the allowable of membrane plus bending stress*, has been categorized as primary membrane plus bending stress. Otherwise, the stresses obtained from the FEA have been linearized to obtain the membrane plus bending component.
Secondary Membrane Plus Bending, Q [RG 7.6, B-3 WB-3213.9]	Self-equilibrating stress necessary to satisfy continuity of structure. Occurs at structural discontinuities. Can be caused by mechanical loads or by thermal expansion. Excludes local stress concentration.	The total stress over a section, *if meeting the allowable of membrane plus bending stress*, has been categorized as secondary membrane plus bending stress. Otherwise, the stresses obtained from the FEA have been linearized to obtain the membrane plus bending component.

Table 2-4

Material Properties

Material	Temp. (°F)	Strength (ksi) Yield (S_y)	Ultimate (S_u)	Membrane Allowable (S_m)	Young's Modulus (10^6 psi)	Coefficient of Thermal Expansion (10^{-6} in/in °F)
ASTM A240 Type 304L		(1)	(1)	(1)	(1)	(1)
	-20	25.0	70.0	16.7	28.8	-
	70	25.0	70.0	16.7	28.3	8.5
	100	25.0	70.0	16.7	-	8.6
	200	21.4	66.1	16.7	27.5	8.9
	300	19.2	61.2	16.7	27.0	9.2
	400	17.5	58.7	15.8	26.4	9.5
	500	16.4	57.5	14.7	25.9	9.7
ASTM A516 Gr. 70 Steel		(1)	(1)	(1)	(1)	(1)
	-20	38.0	70.0	20.0	30.3	-
	70	38.0	70.0	20.0	29.4	6.4
	100	38.0	70.0	20.0	-	6.5
	200	34.8	70.0	20.0	28.8	6.7
	300	33.6	70.0	20.0	28.3	6.9
	400	32.5	70.0	20.0	27.9	7.1
	500	31.0	70.0	20.0	27.3	7.3
ASTM A354 Gr. BD (Lid Bolts)		(1)	(1)	(1)	(1)	(1)
	-20	130	150	30	29.7	-
	70	130	150	30	29.2	6.4
	100	130	150	30	-	6.5
	200	119.1	150	30	28.6	6.7
	300	115	150	30	28.1	6.9
	400	111	150	30	27.7	7.1
	500	105.9	150	30	27.1	7.3
ASTM B29 Lead		(2)			(2)	(2)
	-20	-	-	-	2.43	15.65
	70	5	-	-	2.27	16.06
	100	-	-	-	2.21	16.22
	200	-	-	-	2.01	16.70
	300	-	-	-	1.85	17.33
	400	-	-	-	1.70	18.16
	500	-	-	-	1.52	19.12

Notes:

(1) From ASME B&PV Code 2001, Section II, Part D (Reference 2-4).

(2) From NUREG/CR 0481 (Reference 2-8)

Table 2-5

Stress Intensities in 8-120B Cask under Hot Environment Loading[3]

Component	Stress Category	Allowable S.I. (psi)	Calculated S.I. (psi) [1]	F.S. [2]
Primary Lid	P_m	20,000	3,989	5.01
	$P_m + P_b$	30,000	3,989	7.52
Secondary Lid	P_m	20,000	2,255	8.87
	$P_m + P_b$	30,000	2,255	13.30
Bolting Ring	P_m	20,000	16,385	1.22
	$P_m + P_b$	30,000	16,385	1.83
Inner Shell	P_m	20,000	13,872	1.44
	$P_m + P_b$	30,000	13,872	2.16
Outer Shell	P_m	20,000	14,314	1.40
	$P_m + P_b$	30,000	14,314	2.10
Baseplate	P_m	20,000	9,919	2.02
	$P_m + P_b$	30,000	9,919	3.02
Primary Lid Bolts	P_m	60,000	12,516	4.79
	$P_m + P_b$	90,000	12,516	7.19
Secondary Lid Bolts	P_m	60,000	4,189	14.32
	$P_m + P_b$	90,000	4,189	21.48

Notes:

(1) Unless otherwise indicated in this column, the maximum stress intensity values have been conservatively reported as P_m and $P_m + P_b$ stress intensities.

(2) Factor of Safety, F.S. = (Allowable S.I.) / (Calculated S.I.)

(3) The stress values presented here are obtained from Energy*Solutions* Document ST-626 (Reference 2-13)

Table 2-6

Stress Intensities in 8-120B Cask under Cold Environment Loading[3]

Component	Stress Category	Allowable S.I. (psi)	Calculated S.I. (psi) [1]	F.S. [2]
Primary Lid	P_m	20,000	3,695	5.41
	$P_m + P_b$	30,000	3,695	8.12
Secondary Lid	P_m	20,000	2,102	9.51
	$P_m + P_b$	30,000	2,102	14.27
Bolting Ring	P_m	20,000	4,177	4.79
	$P_m + P_b$	30,000	4,177	7.18
Inner Shell	P_m	20,000	5,075	3.94
	$P_m + P_b$	30,000	5,075	5.91
Outer Shell	P_m	20,000	4,778	4.19
	$P_m + P_b$	30,000	4,778	6.28
Baseplate	P_m	20,000	2,312	8.65
	$P_m + P_b$	30,000	2,312	12.98
Primary Lid Bolts	P_m	60,000	6,197	9.68
	$P_m + P_b$	90,000	6,197	14.52
Secondary Lid Bolts	P_m	60,000	3,904	15.37
	$P_m + P_b$	90,000	3,904	23.05

Notes:

(1) Unless otherwise indicated in this column, the maximum stress intensity values have been conservatively reported as P_m and $P_m + P_b$ stress intensities.

(2) Factor of Safety, F.S. = (Allowable S.I.) / (Calculated S.I.)

(3) The stress values presented here are obtained from Energy*Solutions* Document ST-626 (Reference 2-13)

Table 2-7

Nil Ductility Temperature Requirements for

Fracture Critical Components of the 8-120B Cask

Component	Thickness (in)	A[1] (°F)	T_{NDT} Req [2] (°F)
Bottom End Plate (Outside)	3.25	1	-21
Bottom End Plate (Inside)	3.25	1	-21
Inner Wall	0.75	-20	0
Outer Wall	1.5	-20	0
Primary Lid (Inside)	3.25	1	-21
Primary Lid (Outside)	3.25	1	-21
Secondary Lid (Inside)	3.25	1	-21
Secondary Lid (Outside)	3.25	1	-21
Bolting Ring	3.0	-2	-18

Notes:

(1) Obtained from Figure 2-24.

(2) T_{NDT} determined according to ASTM Standard E208-81.

Table 2-8

Stress Intensities in 8-120B Cask under Reduced External Pressure(3)

Component	Stress Category	Allowable S.I. (psi)	Calculated S.I. (psi) (1)	F.S. (2)
Primary Lid	P_m	20,000	4,488	4.46
	$P_m + P_b$	30,000	4,488	6.68
Secondary Lid	P_m	20,000	2,612	7.66
	$P_m + P_b$	30,000	2,612	11.49
Bolting Ring	P_m	20,000	8,216	2.43
	$P_m + P_b$	30,000	8,216	3.65
Inner Shell	P_m	20,000	6,199	3.23
	$P_m + P_b$	30,000	6,199	4.84
Outer Shell	P_m	20,000	7,133	2.80
	$P_m + P_b$	30,000	7,133	4.21
Baseplate	P_m	20,000	4,476	4.47
	$P_m + P_b$	30,000	4,476	6.70
Primary Lid Bolts	P_m	60,000	5,997	10.01
	$P_m + P_b$	90,000	5,997	15.01
Secondary Lid Bolts	P_m	60,000	4,832	12.42
	$P_m + P_b$	90,000	4,832	18.63

Notes:

(1) Unless otherwise indicated in this column, the maximum stress intensity values have been conservatively reported as P_m and $P_m + P_b$ stress intensities.

(2) Factor of Safety, F.S. = (Allowable S.I.) / (Calculated S.I.)

(3) The stress values presented here are obtained from Energy*Solutions* Document ST-626 (Reference 2-13)

Table 2-9

Stress Intensities in 8-120B Cask under Increased External Pressure and Immersion[3]

Component	Stress Category	Allowable S.I. (psi)	Calculated S.I. (psi) [1]	F.S. [2]
Primary Lid	P_m	20,000	2,743	7.29
	$P_m + P_b$	30,000	2,743	10.94
Secondary Lid	P_m	20,000	1,077	18.57
	$P_m + P_b$	30,000	1,077	27.86
Bolting Ring	P_m	20,000	3,027	6.61
	$P_m + P_b$	30,000	3,027	9.91
Inner Shell	P_m	20,000	4,877	4.10
	$P_m + P_b$	30,000	4,877	6.15
Outer Shell	P_m	20,000	2,554	7.83
	$P_m + P_b$	30,000	2,554	11.75
Baseplate	P_m	20,000	2,812	7.11
	$P_m + P_b$	30,000	2,812	10.67
Primary Lid Bolts	P_m	60,000	6,466	9.28
	$P_m + P_b$	90,000	6,466	13.92
Secondary Lid Bolts	P_m	60,000	1,018	58.94
	$P_m + P_b$	90,000	1,018	88.41

Notes:

(1) Unless otherwise indicated in this column, the maximum stress intensity values have been conservatively reported as P_m and $P_m + P_b$ stress intensities.

(2) Factor of Safety, F.S. = (Allowable S.I.) / (Calculated S.I.)

(3) The stress values presented here are obtained from Energy*Solutions* Document ST-626 (Reference 2-13)

Table 2-10

Normal Condition Drop Test Summary

Drop Orientation	Thermal Environment	Maximum Impact Limiter Reaction(1) (lb)	Approximate Pulse Duration (msec)	Maximum Crush(2) (in)
End	Cold	1.556×10^6	20	0.471
	Hot	1.286×10^6	20	0.556
Side	Cold	8.596×10^5	30	1.043
	Hot	7.104×10^5	30	1.249
Corner	Cold	3.188×10^5	125	4.0
	Hot	2.785×10^5	125	4.8

Notes:

(1) See Figures 13, 16, 19, 22, 25 and 28 of Energy*Solutions* Document ST-625 (Reference 2-14) for the time-history plots of the impact limiter reactions during various drop tests.

(2) See Figures 15, 18, 21, 24, 27, and 30 of Energy*Solutions* Document ST-625 (Reference 2-14) for the time-history plots of the impact limiter crush during various drop tests.

Table 2-11

Stress Intensities in 8-120B Cask under 1-ft End Drop – Hot Condition

Component	Stress Category	Allowable S.I. (psi)	Calculated S.I. (psi) (1)	F.S. (2)
Primary Lid	P_m	20,000	15,086	1.33
	$P_m + P_b$	30,000	15,086	1.99
Secondary Lid	P_m	20,000	12,890	1.55
	$P_m + P_b$	30,000	12,890	2.33
Bolting Ring	P_m	20,000	12,994	1.54
	$P_m + P_b$	30,000	12,994	2.31
Inner Shell	P_m	20,000	16,983	1.18
	$P_m + P_b$	30,000	16,983	1.77
Outer Shell	P_m	20,000	6,837	2.93
	$P_m + P_b$	30,000	6,837	4.39
Baseplate	P_m	20,000	8,980	2.23
	$P_m + P_b$	30,000	8,980	3.34
Primary Lid Bolts	P_m	60,000	6,209	9.66
	$P_m + P_b$	90,000	6,209	14.50
Secondary Lid Bolts	P_m	60,000	15,983	3.75
	$P_m + P_b$	90,000	15,983	5.63

Notes:

(1) Unless otherwise indicated in this column, the maximum stress intensity values have been conservatively reported as P_m and $P_m + P_b$ stress intensities.

(2) Factor of Safety, F.S. = (Allowable S.I.) / (Calculated S.I.)

Table 2-12

Stress Intensities in 8-120B Cask under 1-ft End Drop – Cold Condition

Component	Stress Category	Allowable S.I. (psi)	Calculated S.I. (psi) (1)	F.S. (2)
Primary Lid	P_m	20,000	14,529	1.38
	$P_m + P_b$	30,000	14,529	2.06
Secondary Lid	P_m	20,000	11,767	1.70
	$P_m + P_b$	30,000	11,767	2.55
Bolting Ring	P_m	20,000	9,959	2.01
	$P_m + P_b$	30,000	9,959	3.01
Inner Shell	P_m	20,000	15,787(3)	1.27
	$P_m + P_b$	30,000	15,787(3)	1.90
Outer Shell	P_m	20,000	6,655	3.01
	$P_m + P_b$	30,000	6,655	4.51
Baseplate	P_m	20,000	15,550	1.29
	$P_m + P_b$	30,000	15,550	1.93
Primary Lid Bolts	P_m	60,000	4,115	14.58
	$P_m + P_b$	90,000	4,115	21.87
Secondary Lid Bolts	P_m	60,000	13,075	4.59
	$P_m + P_b$	90,000	13,075	6.88

Notes:

(1) Unless otherwise indicated in this column, the maximum stress intensity values have been conservatively reported as P_m and $P_m + P_b$ stress intensities.

(2) Factor of Safety, F.S. = (Allowable S.I.) / (Calculated S.I.)

(3) The stress intensity values reported here have been obtained by averaging the values in the vicinity of the highest local stress. The high local stresses resulted from the modeling constraint in this area. See Figures 50, 51 and Appendix 2 of Energy*Solutions* Document ST-627 (Reference 2-15).

Table 2-13

Stress Intensities in 8-120B Cask under 1-ft Side Drop – Hot Condition

Component	Stress Category	Allowable S.I. (psi)	Calculated S.I. (psi) (1)	F.S. (2)
Primary Lid	P_m	20,000	12,159(3)	1.64
	$P_m + P_b$	30,000	12,159(3)	2.47
Secondary Lid	P_m	20,000	6,058	3.30
	$P_m + P_b$	30,000	6,058	4.95
Bolting Ring	P_m	20,000	13,360	1.50
	$P_m + P_b$	30,000	13,360	2.25
Inner Shell	P_m	20,000	14,098	1.42
	$P_m + P_b$	30,000	14,098	2.13
Outer Shell	P_m	20,000	10,564	1.89
	$P_m + P_b$	30,000	10,564	2.84
Baseplate	P_m	20,000	10,536	1.90
	$P_m + P_b$	30,000	10,536	2.85
Primary Lid Bolts	P_m	60,000	34,995	1.71
	$P_m + P_b$	90,000	34,995	2.57
Secondary Lid Bolts	P_m	60,000	10,982	5.46
	$P_m + P_b$	90,000	10,982	8.20

Notes:

(1) Unless otherwise indicated in this column, the maximum stress intensity values have been conservatively reported as P_m and $P_m + P_b$ stress intensities.

(2) Factor of Safety, F.S. = (Allowable S.I.) / (Calculated S.I.)

(3) Obtained from the model after removing the elements in the bolt hole vicinity. See Appendix 2 of Energy*Solutions* Document ST-627 (Reference 2-15).

Table 2-14

Stress Intensities in 8-120B Cask under 1-ft Side Drop – Cold Condition

Component	Stress Category	Allowable S.I. (psi)	Calculated S.I. (psi) (1)	F.S. (2)
Primary Lid	P_m	20,000	12,720(3)	1.57
	$P_m + P_b$	30,000	12,720(3)	2.36
Secondary Lid	P_m	20,000	6,849	2.92
	$P_m + P_b$	30,000	6,849	4.38
Bolting Ring	P_m	20,000	15,824	1.26
	$P_m + P_b$	30,000	15,824	1.90
Inner Shell	P_m	20,000	16,531	1.21
	$P_m + P_b$	30,000	16,531	1.81
Outer Shell	P_m	20,000	15,289	1.31
	$P_m + P_b$	30,000	15,289	1.96
Baseplate	P_m	20,000	13,015	1.54
	$P_m + P_b$	30,000	13,015	2.31
Primary Lid Bolts	P_m	60,000	44,518	1.35
	$P_m + P_b$	90,000	44,518	2.02
Secondary Lid Bolts	P_m	60,000	10,604	5.66
	$P_m + P_b$	90,000	10,604	8.49

Notes:

(1) Unless otherwise indicated in this column, the maximum stress intensity values have been conservatively reported as P_m and $P_m + P_b$ stress intensities.

(2) Factor of Safety, F.S. = (Allowable S.I.) / (Calculated S.I.)

(3) Obtained from the model after removing the elements in the bolt hole vicinity. See Appendix 2 of Energy*Solutions* Document ST-627 (Reference 2-15).

Table 2-15

Stress Intensities in 8-120B Cask under 1-ft Corner Drop – Hot Condition

Component	Stress Category	Allowable S.I. (psi)	Calculated S.I. (psi) (1)	F.S. (2)
Primary Lid	P_m	20,000	9,642	2.07
	$P_m + P_b$	30,000	9,642	3.11
Secondary Lid	P_m	20,000	6,664	3.00
	$P_m + P_b$	30,000	6,664	4.50
Bolting Ring	P_m	20,000	9,559	2.09
	$P_m + P_b$	30,000	9,559	3.14
Inner Shell	P_m	20,000	12,201	1.64
	$P_m + P_b$	30,000	12,201	2.46
Outer Shell	P_m	20,000	6,847	2.92
	$P_m + P_b$	30,000	6,847	4.38
Baseplate	P_m	20,000	5,307	3.77
	$P_m + P_b$	30,000	5,307	5.65
Primary Lid Bolts	P_m	60,000	24,600	2.44
	$P_m + P_b$	90,000	24,600	3.66
Secondary Lid Bolts	P_m	60,000	13,534	4.43
	$P_m + P_b$	90,000	13,534	6.65

Notes:

(1) Unless otherwise indicated in this column, the maximum stress intensity values have been conservatively reported as P_m and $P_m + P_b$ stress intensities.

(2) Factor of Safety, F.S. = (Allowable S.I.) / (Calculated S.I.)

Table 2-16

Stress Intensities in 8-120B Cask under 1-ft Corner Drop – Cold Condition

Component	Stress Category	Allowable S.I. (psi)	Calculated S.I. (psi) (1)	F.S. (2)
Primary Lid	P_m	20,000	9,634	2.08
	$P_m + P_b$	30,000	9,634	3.11
Secondary Lid	P_m	20,000	4,372	4.57
	$P_m + P_b$	30,000	4,372	6.86
Bolting Ring	P_m	20,000	8,668	2.31
	$P_m + P_b$	30,000	8,668	3.46
Inner Shell	P_m	20,000	8,930	2.24
	$P_m + P_b$	30,000	8,930	3.36
Outer Shell	P_m	20,000	8,437	2.37
	$P_m + P_b$	30,000	8,437	3.56
Baseplate	P_m	20,000	4,637	4.31
	$P_m + P_b$	30,000	4,637	6.47
Primary Lid Bolts	P_m	60,000	17,360	3.46
	$P_m + P_b$	90,000	17,360	5.18
Secondary Lid Bolts	P_m	60,000	8,322	7.21
	$P_m + P_b$	90,000	8,322	10.81

Notes:

(1) Unless otherwise indicated in this column, the maximum stress intensity values have been conservatively reported as P_m and $P_m + P_b$ stress intensities.

(2) Factor of Safety, F.S. = (Allowable S.I.) / (Calculated S.I.)

Table 2-17

Hypothetical Accident Condition Drop Test Summary

Drop Orientation	Thermal Environment	Maximum Impact Limiter Reaction(1) (lb)	Approximate Pulse Duration (msec)	Maximum Crush(2) (in)
End	Cold	5.359×10^6	20	3.529
	Hot	4.427×10^6	20	4.354
Side	Cold	3.937×10^6	25	5.814
	Hot	3.403×10^6	25	7.182
Corner	Cold	2.103×10^6	100	14.907
	Hot	2.000×10^6	100	17.060

Notes:

(1) See Figures 31, 35, 39, 43, 47, and 51 of Energy*Solutions* Document ST-625 (Reference 2-14) for the time-history plots of the impact limiter reactions during various drop tests.

(2) See Figures 34, 38, 42, 46, 50 and 54 of Energy*Solutions* Document ST-625 (Reference 2-14) for the time-history plots of the impact limiter crush during various drop tests.

Table 2-18

Stress Intensities in 8-120B Cask under 30-ft End Drop – Hot Condition

Component	Stress Category	Allowable S.I. (psi)	Calculated S.I. (psi) (1)	F.S. (2)
Primary Lid	P_m	48,000	22,900(3)	2.10
	$P_m + P_b$	70,000	50,220(3)	1.40
Secondary Lid	P_m	48,000	39,223	1.22
	$P_m + P_b$	70,000	39,223	1.78
Bolting Ring	P_m	48,000	36,835	1.30
	$P_m + P_b$	70,000	36,835	1.90
Inner Shell	P_m	48,000	45,432	1.06
	$P_m + P_b$	70,000	45,432	1.54
Outer Shell	P_m	48,000	23,422	2.05
	$P_m + P_b$	70,000	23,422	2.99
Baseplate	P_m	48,000	42,473	1.13
	$P_m + P_b$	70,000	42,473	1.65
Primary Lid Bolts	P_m	105,000	14,241	7.37
	$P_m + P_b$	150,000	14,241	10.53
Secondary Lid Bolts	P_m	105,000	45,267	2.32
	$P_m + P_b$	150,000	45,267	3.31

Notes:

(1) Unless otherwise indicated in this column, the maximum stress intensity values have been conservatively reported as P_m and $P_m + P_b$ stress intensities.

(2) Factor of Safety, F.S. = (Allowable S.I.) / (Calculated S.I.)

(3) Obtained from the stress linearization over the cross-section. See Appendix 2 of Energy*Solutions* Document ST-627 (Reference 2-15).

Table 2-19

Stress Intensities in 8-120B Cask under 30-ft End Drop – Cold Condition

Component	Stress Category	Allowable S.I. (psi)	Calculated S.I. (psi) (1)	F.S. (2)
Primary Lid	P_m	48,000	23,190(3)	2.07
	$P_m + P_b$	70,000	50,170(3)	1.40
Secondary Lid	P_m	48,000	38,045	1.26
	$P_m + P_b$	70,000	38,045	1.84
Bolting Ring	P_m	48,000	27,167	1.77
	$P_m + P_b$	70,000	27,167	2.58
Inner Shell	P_m	48,000	38,466	1.25
	$P_m + P_b$	70,000	38,466	1.82
Outer Shell	P_m	48,000	26,337	1.82
	$P_m + P_b$	70,000	26,337	2.66
Baseplate	P_m	48,000	47,147	1.02
	$P_m + P_b$	70,000	47,147	1.48
Primary Lid Bolts	P_m	105,000	8,528	12.31
	$P_m + P_b$	150,000	8,528	17.59
Secondary Lid Bolts	P_m	105,000	42,463	2.47
	$P_m + P_b$	150,000	42,463	3.53

Notes:

(1) Unless otherwise indicated in this column, the maximum stress intensity values have been conservatively reported as P_m and $P_m + P_b$ stress intensities.

(2) Factor of Safety, F.S. = (Allowable S.I.) / (Calculated S.I.)

(3) Obtained from the stress linearization over the cross-section. See Appendix 2 of Energy*Solutions* Document ST-627 (Reference 2-15).

Table 2-20

Stress Intensities in 8-120B Cask under 30-ft Side Drop – Hot Condition

Component	Stress Category	Allowable S.I. (psi)	Calculated S.I. (psi) (6)	F.S. (5)
Primary Lid	P_m	48,000	34,749(1)	1.38
	$P_m + P_b$	70,000	60,341(1)	1.16
Secondary Lid	P_m	48,000	32,887	1.46
	$P_m + P_b$	70,000	32,887	2.13
Bolting Ring	P_m	48,000	40,748(2)	1.19
	$P_m + P_b$	70,000	40,748(2)	1.73
Inner Shell	P_m	48,000	36,700(3)	1.31
	$P_m + P_b$	70,000	61,810(3)	1.13
Outer Shell	P_m	48,000	38,000(3)	1.26
	$P_m + P_b$	70,000	55,470(3)	1.26
Baseplate	P_m	48,000	43,554	1.10
	$P_m + P_b$	70,000	43,554	1.61
Primary Lid Bolts	P_m	105,000	24,034(4)	4.37
	$P_m + P_b$	150,000	136,480(4)	1.10
Secondary Lid Bolts	P_m	105,000	50,990	2.06
	$P_m + P_b$	150,000	50,990	2.94

Notes:

(1) Obtained from the model after removing the elements in the bolt hole vicinity. P_m value reported here is the average value over the thickness. See Figure 52 and Appendix 2 of Energy*Solutions* Document ST-627 (Reference 2-15).

(2) Obtained from the model after removing the elements in the bolt hole vicinity. See Appendix 2 of Energy*Solutions* Document ST-627 (Reference 2-15).

(3) Obtained from the stress linearization over the cross-section. See Appendix 2 of Energy*Solutions* Document ST-627 (Reference 2-15).

(4) Bolt stresses reported here were obtained from the bolt section evaluation using loading from the FEM analyses. See Section 7.3 and Table 19 of Energy*Solutions* Document ST-627 (Reference 2-15).

(5) Factor of Safety, F.S. = (Allowable S.I.) / (Calculated S.I.)

(6) Unless otherwise indicated in this column, the maximum stress intensity values have been conservatively reported as P_m and $P_m + P_b$ stress intensities.

Table 2-21

Stress Intensities in 8-120B Cask under 30-ft Side Drop – Cold Condition

Component	Stress Category	Allowable S.I. (psi)	Calculated S.I. (psi) (6)	F.S. (5)
Primary Lid	P_m	48,000	35,483(1)	1.35
	$P_m + P_b$	70,000	62,481(1)	1.12
Secondary Lid	P_m	48,000	35,835	1.34
	$P_m + P_b$	70,000	35,835	1.95
Bolting Ring	P_m	48,000	42,444(2)	1.13
	$P_m + P_b$	70,000	42,444(2)	1.65
Inner Shell	P_m	48,000	30,040(3)	1.60
	$P_m + P_b$	70,000	57,670(3)	1.21
Outer Shell	P_m	48,000	41,310(3)	1.16
	$P_m + P_b$	70,000	59,250(3)	1.18
Baseplate	P_m	48,000	41,288	1.16
	$P_m + P_b$	70,000	41,288	1.70
Primary Lid Bolts	P_m	105,000	25,417(4)	4.13
	$P_m + P_b$	150,000	143,229(4)	1.05
Secondary Lid Bolts	P_m	105,000	55,207	1.90
	$P_m + P_b$	150,000	55,207	2.72

Notes:

(1) Obtained from the model after removing the elements in the bolt hole vicinity. P_m value reported here is the average value over the thickness. See Figure 54 and Appendix 2 of Energy*Solutions* Document ST-627 (Reference 2-15).

(2) Obtained from the model after removing the elements in the bolt hole vicinity. See Appendix 2 of Energy*Solutions* Document ST-627 (Reference 2-15).

(3) Obtained from the stress linearization over the cross-section. See Appendix 2 of Energy*Solutions* Document ST-627 (Reference 2-15).

(4) Bolt stresses reported here have been obtained from the bolt section evaluation using the loading obtained from the FEM analyses. See Section 7.3 and Table 20 of Energy*Solutions* Document ST-627 (Reference 2-15).

(5) Factor of Safety, F.S. = (Allowable S.I.) / (Calculated S.I.)

(6) Unless otherwise indicated in this column, the maximum stress intensity values have been conservatively reported as P_m and $P_m + P_b$ stress intensities.

Table 2-22

Stress Intensities in 8-120B Cask under 30-ft Corner Drop – Hot Condition

Component	Stress Category	Allowable S.I. (psi)	Calculated S.I. (psi) (5)	F.S. (4)
Primary Lid	P_m	48,000	30,100(1)	1.60
	$P_m + P_b$	70,000	69,570(1)	1.01
Secondary Lid	P_m	48,000	29,808	1.61
	$P_m + P_b$	70,000	29,808	2.35
Bolting Ring	P_m	48,000	46,432(2)	1.03
	$P_m + P_b$	70,000	46,432(2)	1.51
Inner Shell	P_m	48,000	32,880(1)	1.46
	$P_m + P_b$	70,000	49,750(1)	1.41
Outer Shell	P_m	48,000	31,931	1.50
	$P_m + P_b$	70,000	31,931	2.19
Baseplate	P_m	48,000	12,150	3.95
	$P_m + P_b$	70,000	12,150	5.76
Primary Lid Bolts	P_m	105,000	22,261(3)	4.72
	$P_m + P_b$	150,000	95,433(3)	1.57
Secondary Lid Bolts	P_m	105,000	56,020	1.87
	$P_m + P_b$	150,000	56,020	2.68

Notes:

(1) Obtained from the stress linearization over the cross-section. See Appendix 2 of Energy*Solutions* Document ST-627 (Reference 2-15).

(2) Obtained from the model after removing the elements in the bolt hole vicinity. See Appendix 2 of Energy*Solutions* Document ST-627 (Reference 2-15).

(3) Bolt stresses reported here have been obtained from the bolt section evaluation using the loading obtained from the FEM analyses. See Section 7.3 and Tables 25 and 28 of Energy*Solutions* Document ST-627 (Reference 2-15).

(4) Factor of Safety, F.S. = (Allowable S.I.) / (Calculated S.I.)

(5) Unless otherwise indicated in this column, the maximum stress intensity values have been conservatively reported as P_m and $P_m + P_b$ stress intensities.

Table 2-23

Stress Intensities in 8-120B Cask under 30-ft Corner Drop – Cold Condition

Component	Stress Category	Allowable S.I. (psi)	Calculated S.I. (4) (psi)	F.S. (3)
Primary Lid	P_m	48,000	30,250(1)	1.59
	$P_m + P_b$	70,000	69,090(1)	1.01
Secondary Lid	P_m	48,000	27,743	1.73
	$P_m + P_b$	70,000	27,743	2.52
Bolting Ring	P_m	48,000	42,151(2)	1.14
	$P_m + P_b$	70,000	42,151(2)	1.66
Inner Shell	P_m	48,000	38,757	1.24
	$P_m + P_b$	70,000	38,757	1.81
Outer Shell	P_m	48,000	40,893	1.17
	$P_m + P_b$	70,000	40,893	1.71
Baseplate	P_m	48,000	26,335	1.82
	$P_m + P_b$	70,000	26,335	2.66
Primary Lid Bolts	P_m	105,000	20,456	5.13
	$P_m + P_b$	150,000	90,545	1.66
Secondary Lid Bolts	P_m	105,000	51,222	2.05
	$P_m + P_b$	150,000	51,222	2.93

Notes:

(1) Obtained from the stress linearization over the cross-section. See Appendix 2 of Energy*Solutions* Document ST-627 (Reference 2-15).

(2) Obtained from the model after removing the elements in the bolt hole vicinity. See Appendix 2 of Energy*Solutions* Document ST-627 (Reference 2-15).

(3) Factor of Safety, F.S. = (Allowable S.I.) / (Calculated S.I.)

(4) Unless otherwise indicated in this column, the maximum stress intensity values have been conservatively reported as P_m and $P_m + P_b$ stress intensities.

(5) Bolt stresses reported here have been obtained from the bolt section evaluation using the loading obtained from the FEM analyses. See Section 7.3 and Tables 26 and 29 of Energy*Solutions* Document ST-627 (Reference 2-15).

Table 2-24

Maximum Impact Limiter Attachment Force during Various HAC Drop Tests

Drop Orientation	Thermal Environment	Maximum Attachment Force(1) (lb)
End	Cold	12,796
	Hot	10,826
Side	Cold	35,350
	Hot	29,943
Corner	Cold	31,296
	Hot	30,986

Notes:

(1) See Figures 33, 37, 41, 45, 49, and 53 of ST-625 (Reference 2-14) for the time-history plots of the maximum attachment forces during various drop tests.

Table 2-25

Maximum Stress Intensities in 8-120B Cask HAC Fire

Component	Stress Category	Allowable S.I. (psi)	Calculated S.I. (1), (2) (psi)	F.S. (3)
Primary Lid	$P_m + P_b$	70,000	20,391	3.43
Secondary Lid	$P_m + P_b$	70,000	8,781	7.97
Bolting Ring	$P_m + P_b$	70,000	40,535	1.73
Inner Shell	$P_m + P_b$	70,000	26,802	2.61
Outer Shell	$P_m + P_b$	70,000	36,692	1.91
Baseplate	$P_m + P_b$	70,000	18,332	3.82
Primary Lid Bolts	$P_m + P_b$	150,000	45,904	3.27
Secondary Lid Bolts	$P_m + P_b$	150,000	16,357	9.17

Notes:

(1) Unless otherwise indicated in the column, the maximum stress intensity values, obtained from the finite element model, have been conservatively reported as $P_m + P_b$ stress intensities.

(2) Energy*Solutions* Document ST-637 (Reference 2-21) presents the plot of temperature distribution and stresses in the cask at various time instants. The stress values presented here are the maximum stress in a particular component during the entire HAC fire.

(3) Factor of Safety, F.S. = (Allowable S.I.) / (Calculated S.I.)

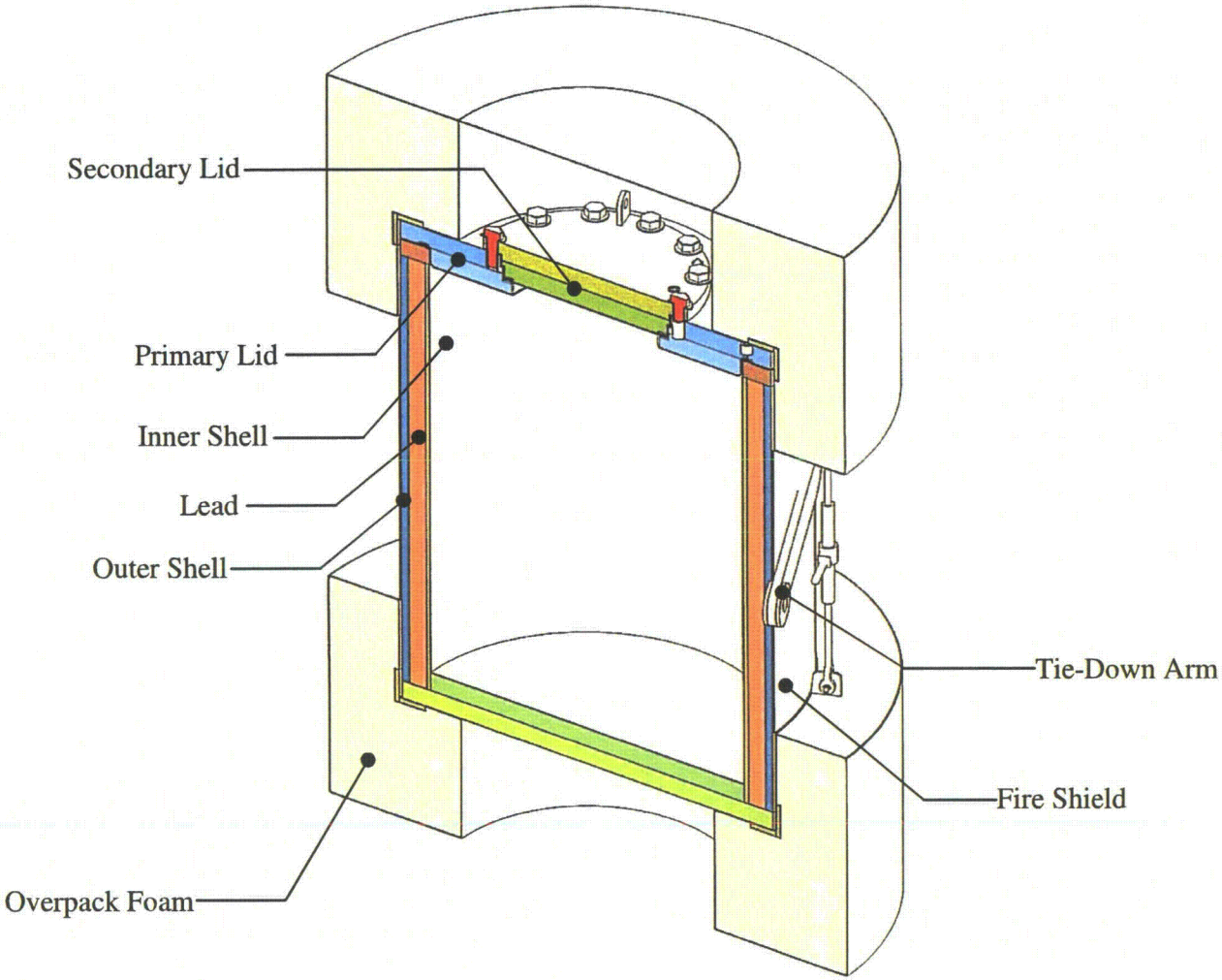

Figure 2-1
Nomenclature of Components

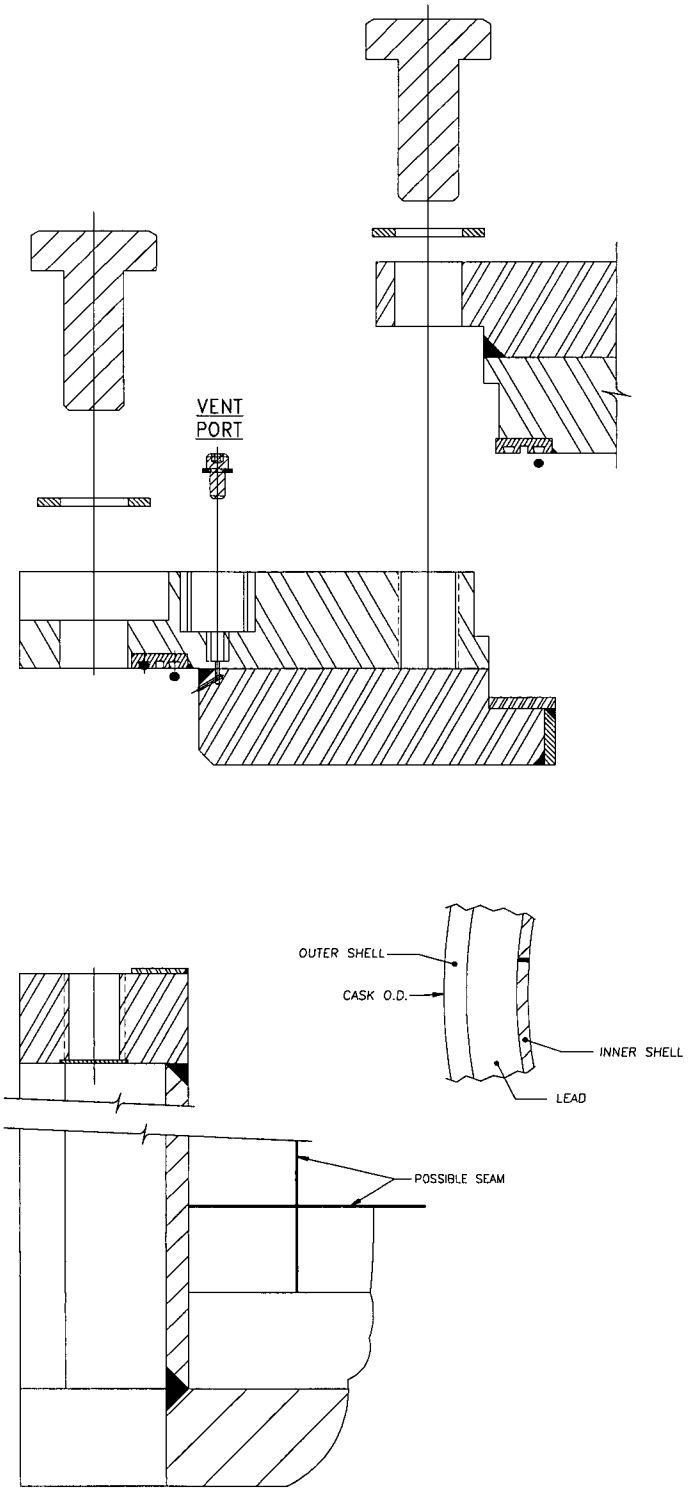

Figure 2-2
8-120B Cask - Containment Boundary
(Shown Hatched)

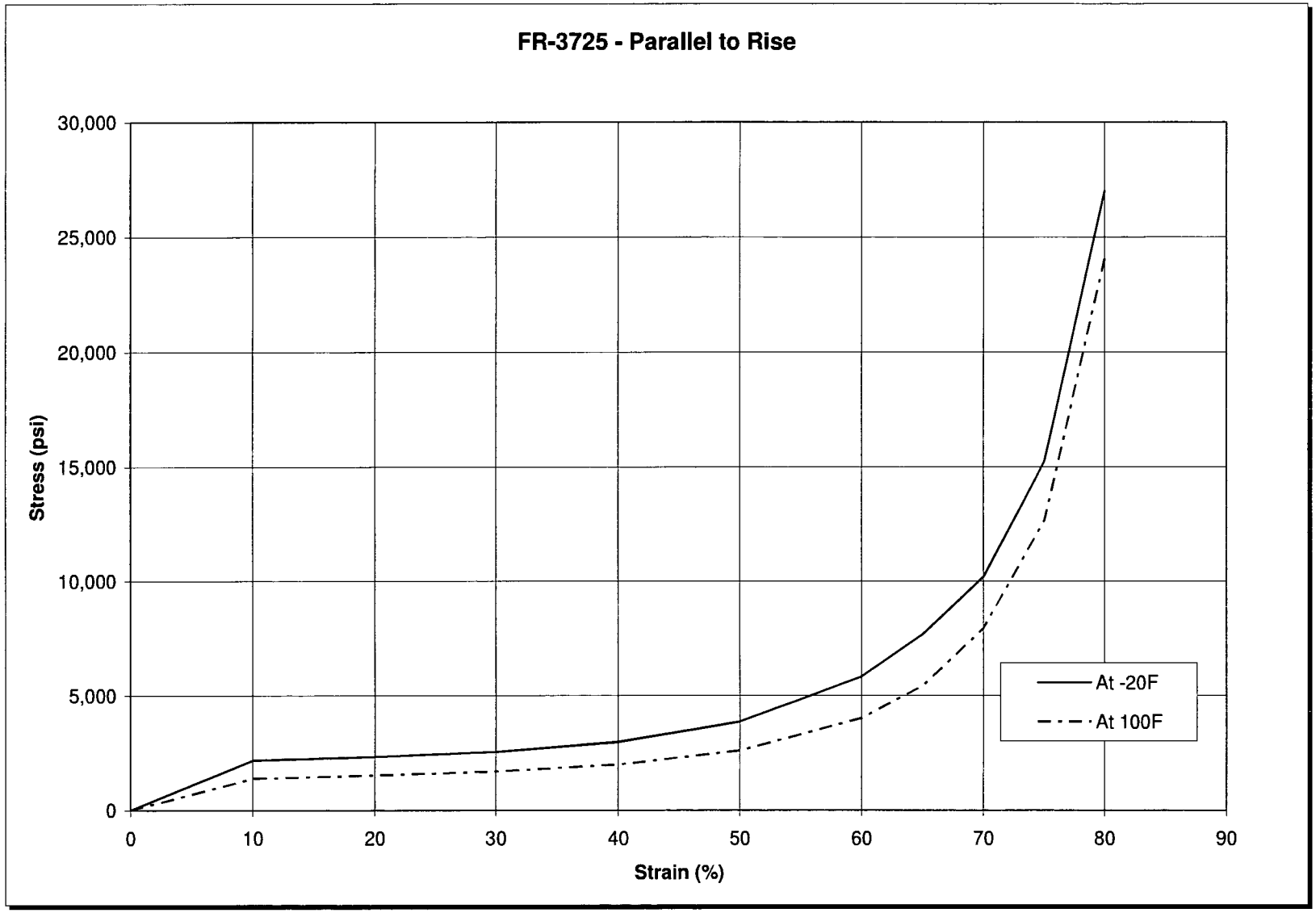

Figure 2-3
Polyurethane Foam Stress-Strain Properties Parallel to Rise Direction
(Source: General Plastics Last-A-Foam FR-3700 Sales Brochure)

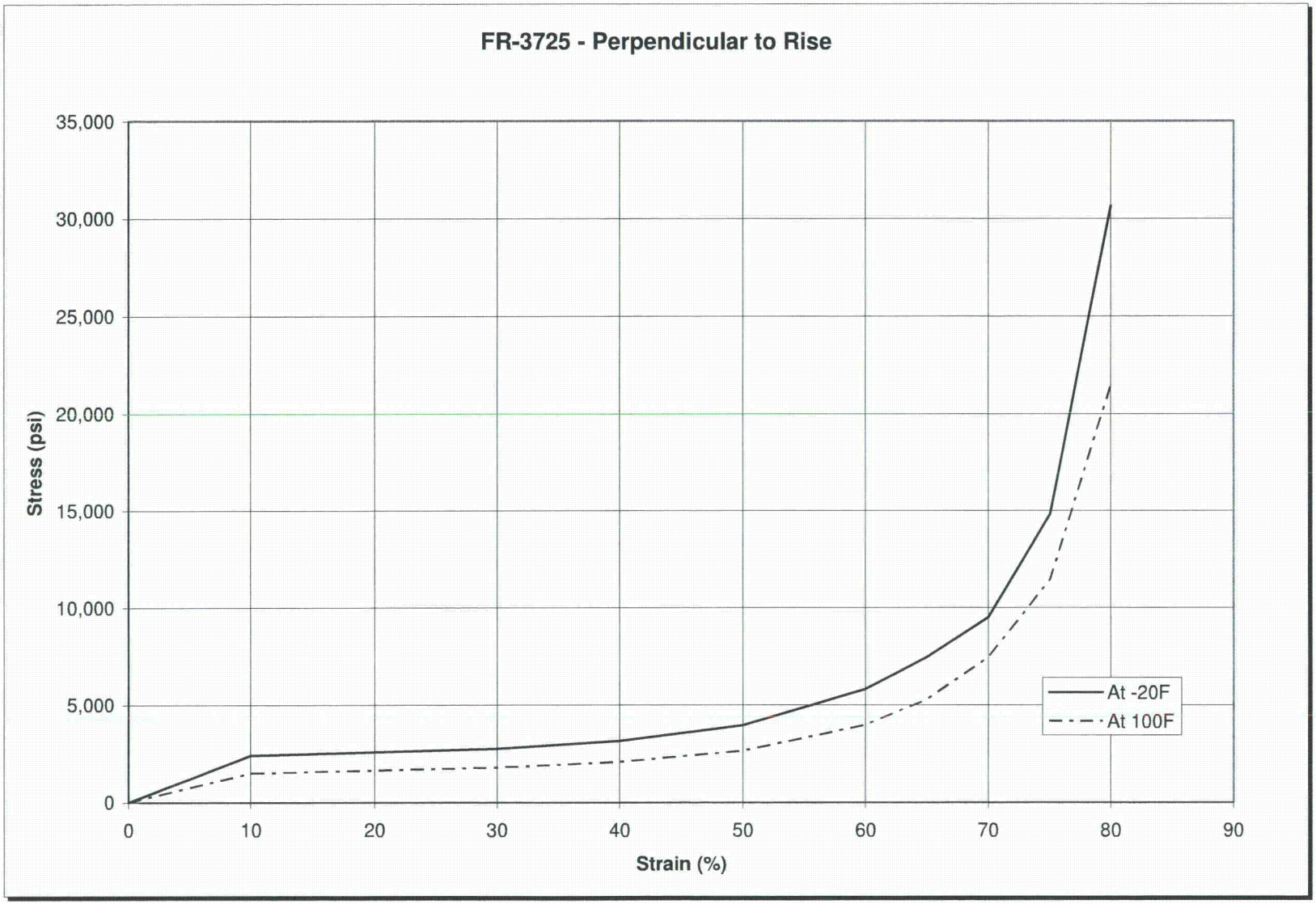

Figure 2-4
Polyurethane Foam Stress-Strain Properties Perpendicular to Rise Direction
(Source: General Plastics Last-A-Foam FR-3700 Sales Brochure)

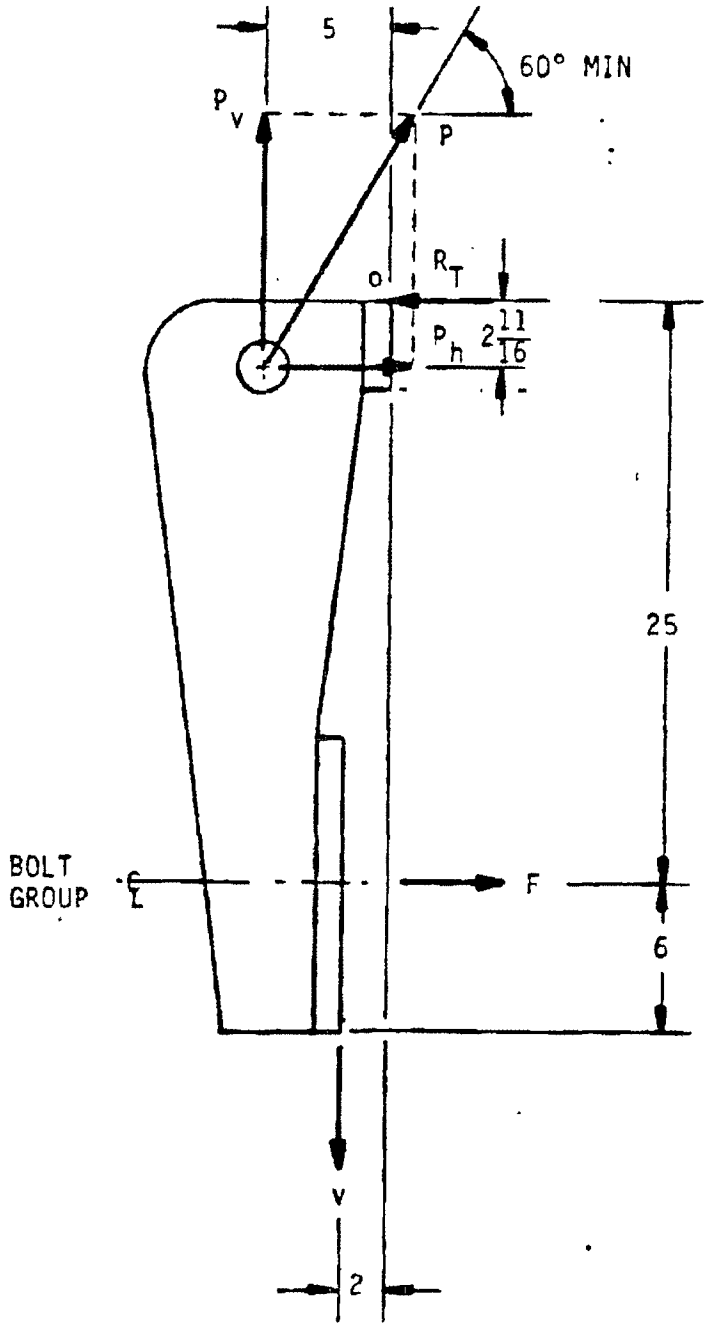

P = Lifting force on ear
F = Tensile force on bolts
V = Shear force on bolts
R_T = Reaction force against top of cask with lid in place.

Figure 2-5
Lifting Ear Free Body Diagram

FIGURE WITHHELD UNDER 10 CFR 2.390

Figure 2-6
Lifting Ear Details

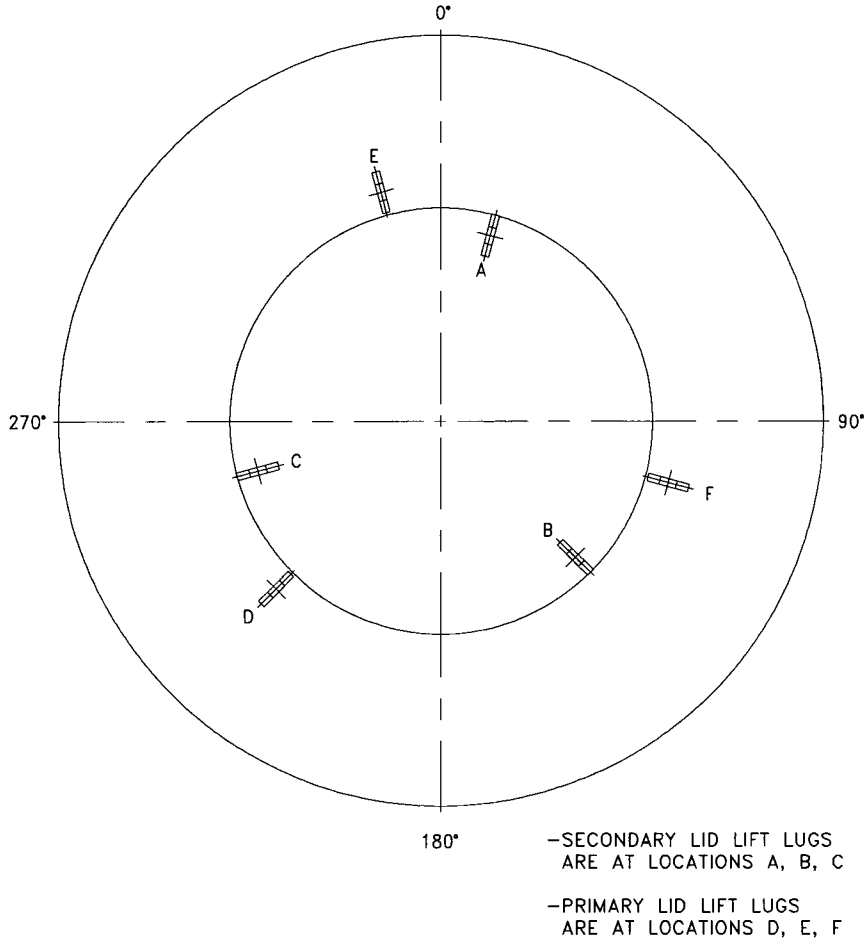

Figure 2-7
Primary/Secondary Lid Lifting Lug Orientation

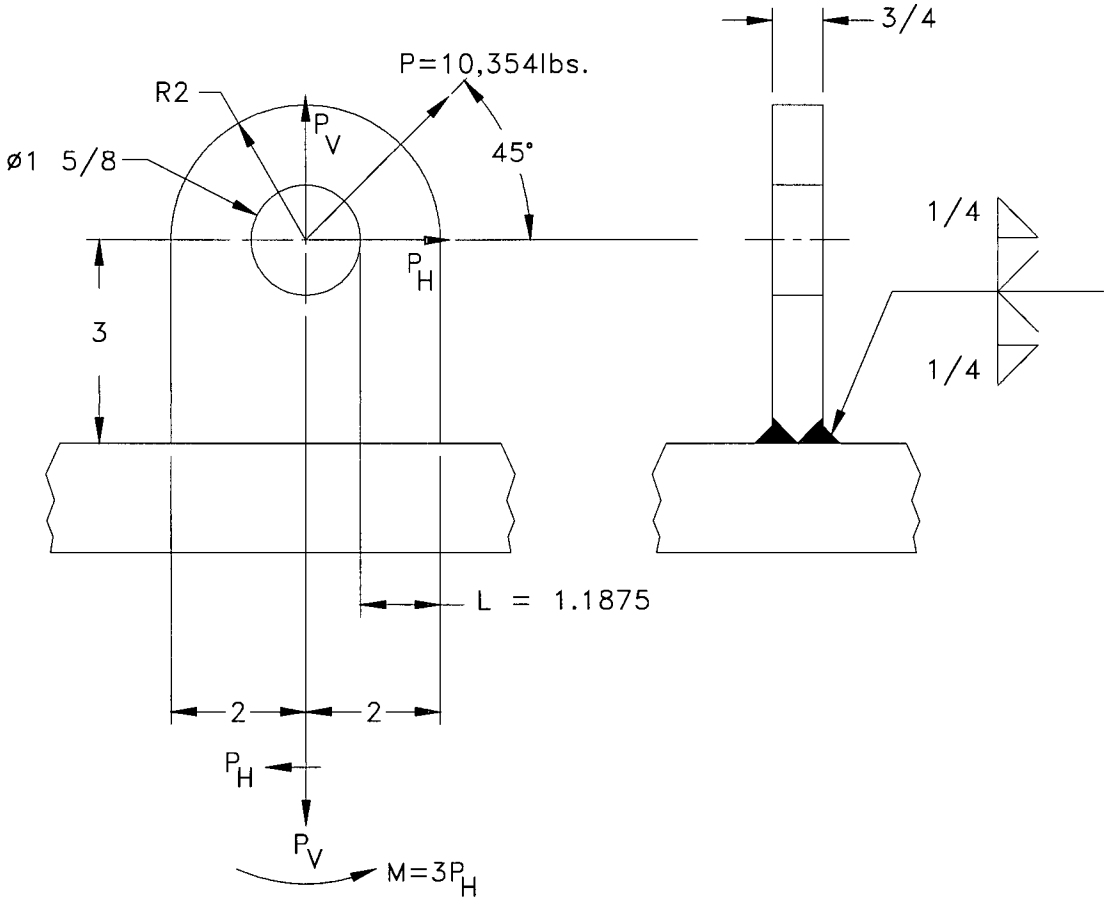

Figure 2-8
Freebody Diagram of Lid Lifting Lug

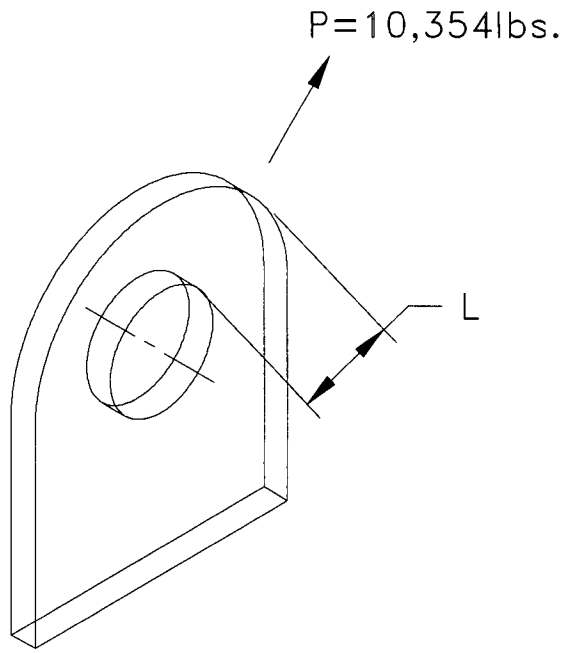

Figure 2-9
Lid Lifting Lug Eye Tear-out Area

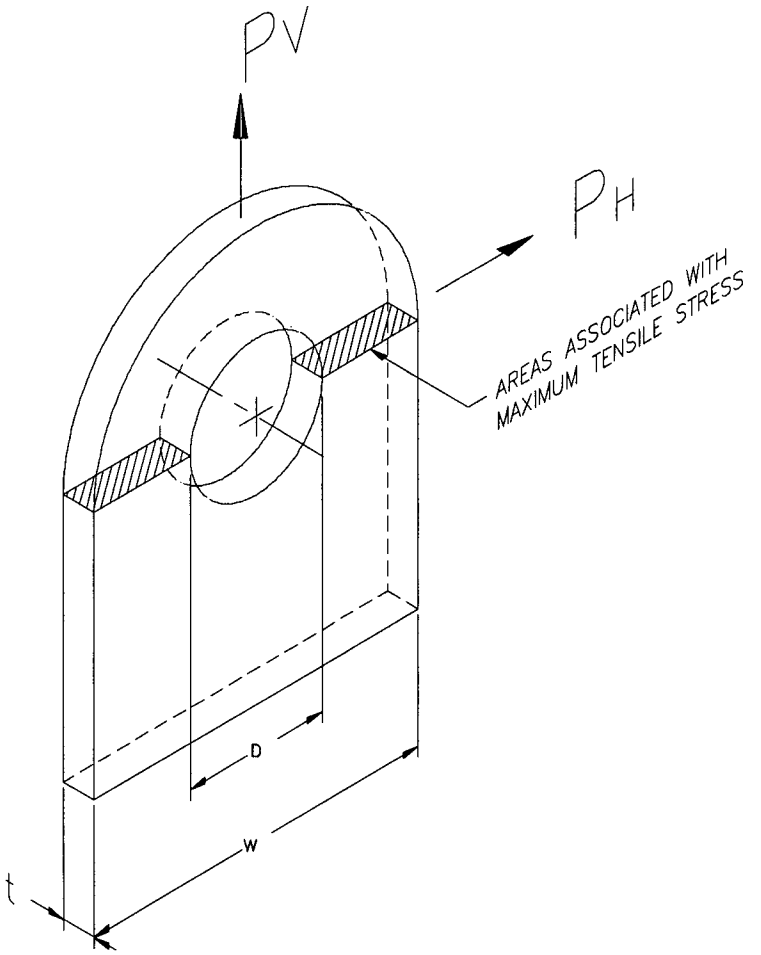

Figure 2-10
Lid Lifting Lug Net Tensile Area

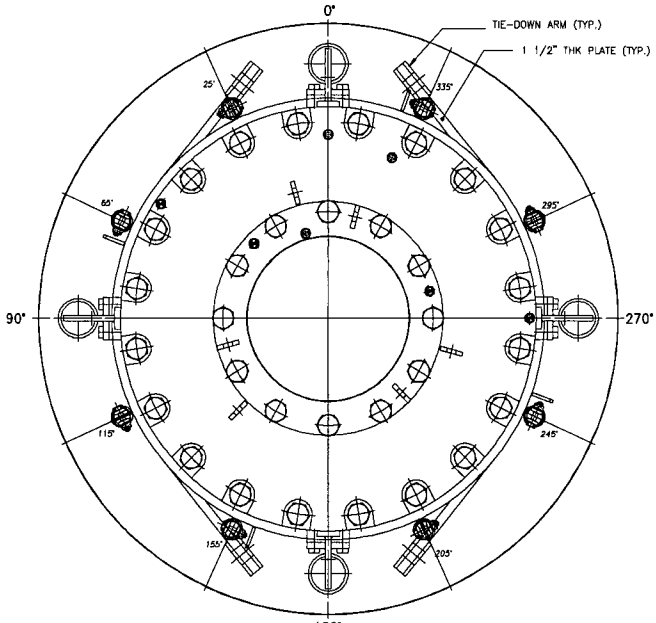

CASK TOP VIEW

TOP IMPACT LIMITER REMOVED FOR CLARITY

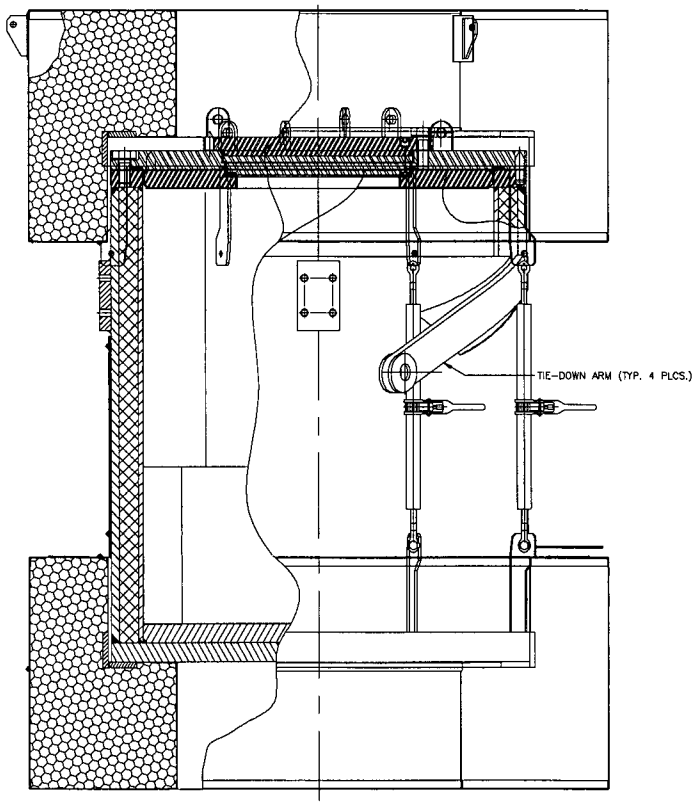

CASK ELEVATION VIEW

Figure 2-11
Cask Tie Down Arm

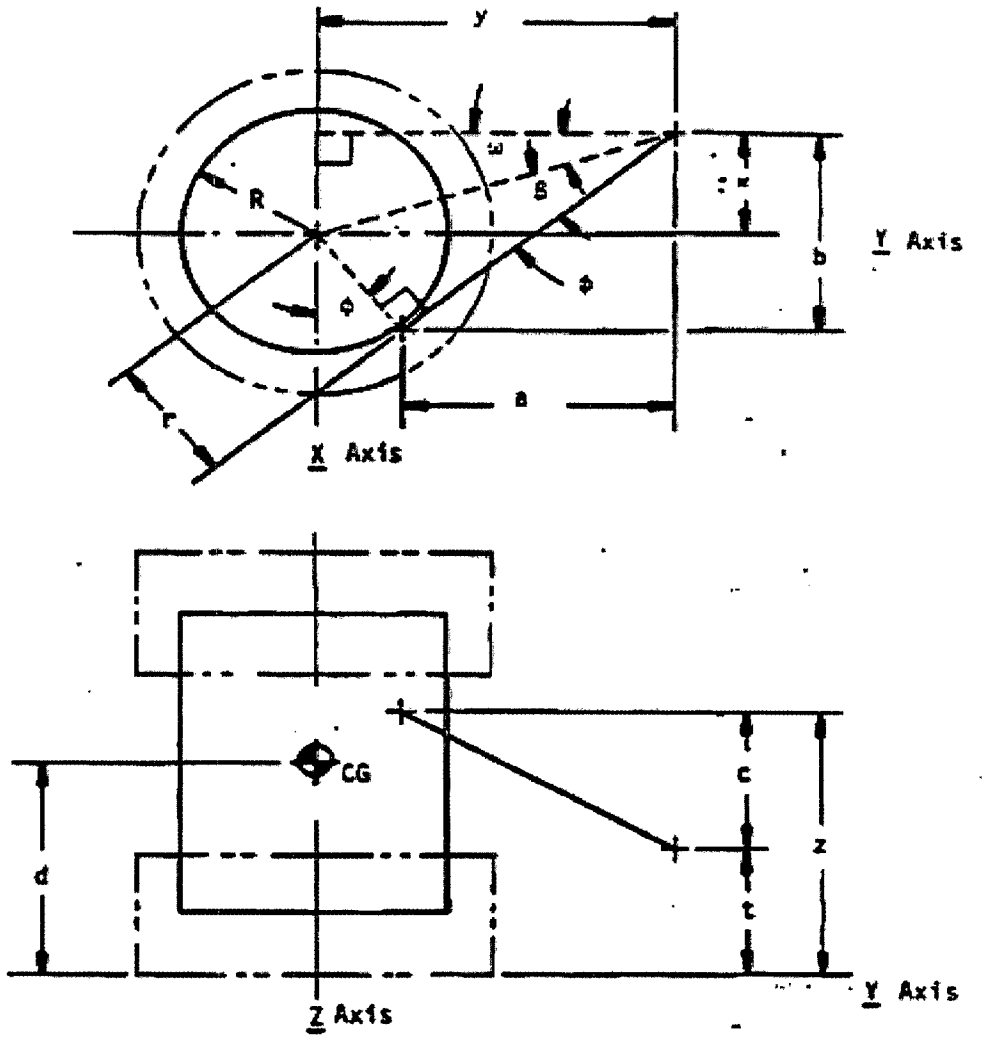

R = 36.75 = CASK RADIUS
r = 37.5 = R+ TANGENT OFFSET
d = 62.5 = CASK C.G. ELEV.
t = 37.0 = TRAILER EAR ELEV.
x = 30.0 = Y AXIS OFFSET
y = 96.0 = X AXIS OFFSET
z = 79.0 = CASK TANGENT ELEV.
ω = 17.35° = ATN (x/y)
β = 21.89° = ASN [r/(y/cosω)]
φ = 39.25° = ω + β
a = 72.27 = y - rsin φ
b = 59.04 = x + rcos φ
c = 42.0 = z - t
L = 102.34 = $(a^2 + b^2 + c^2)^{\frac{1}{2}}$

Figure 2-12
Tie Down Arm Geometry

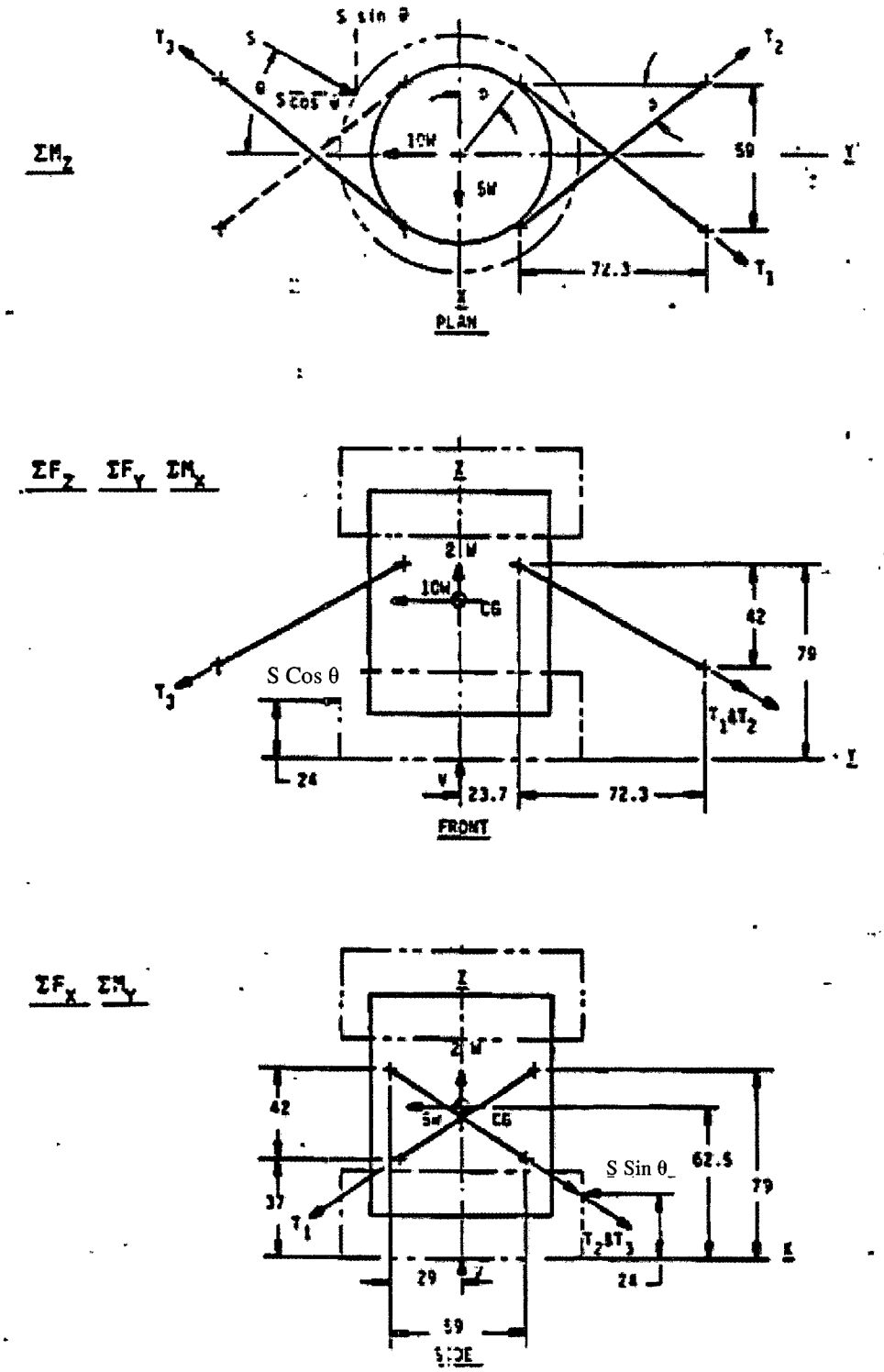

Figure 2-13
Tie Down Free Body Diagram

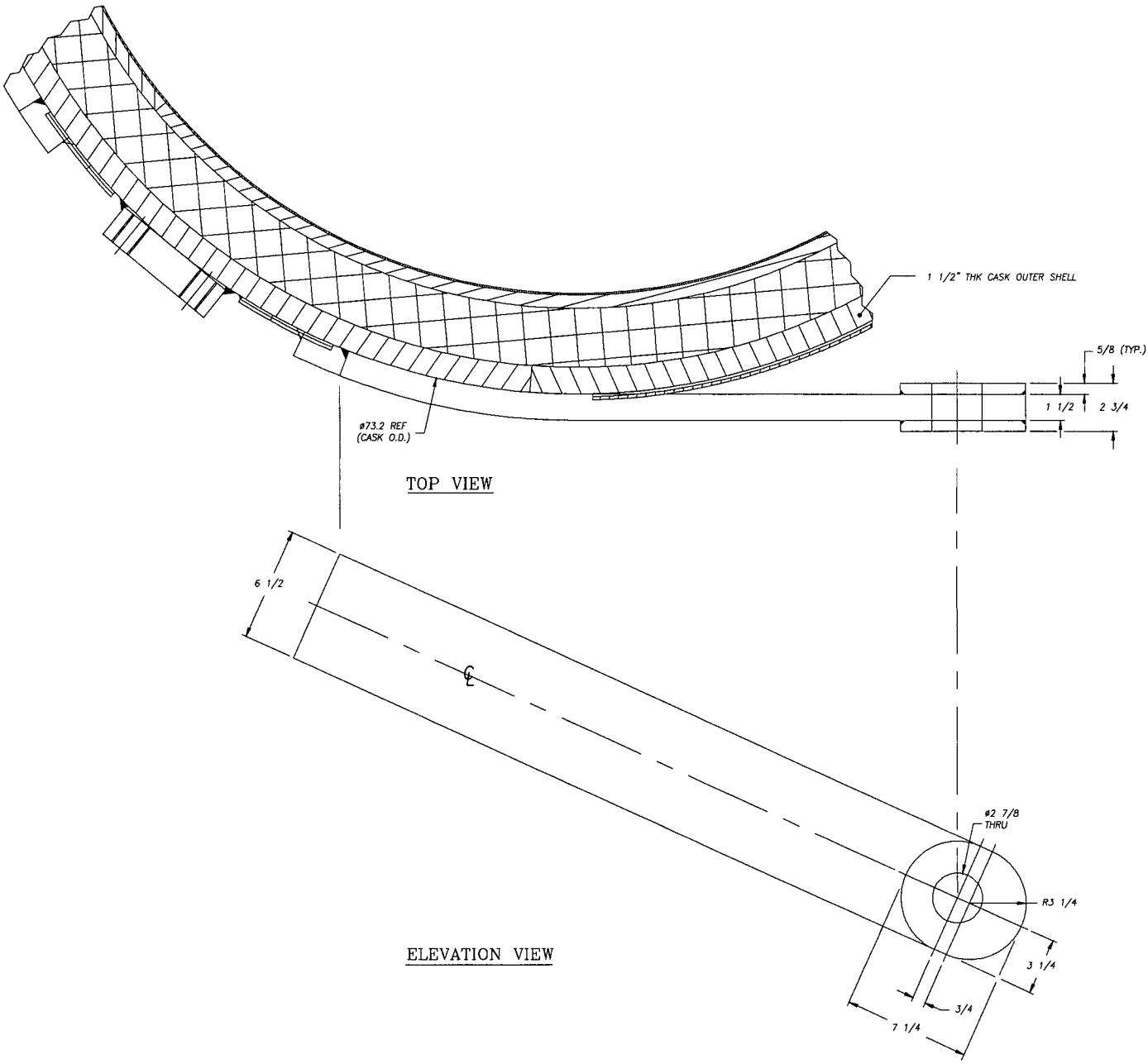

Figure 2-14
Tie Down Arm Details

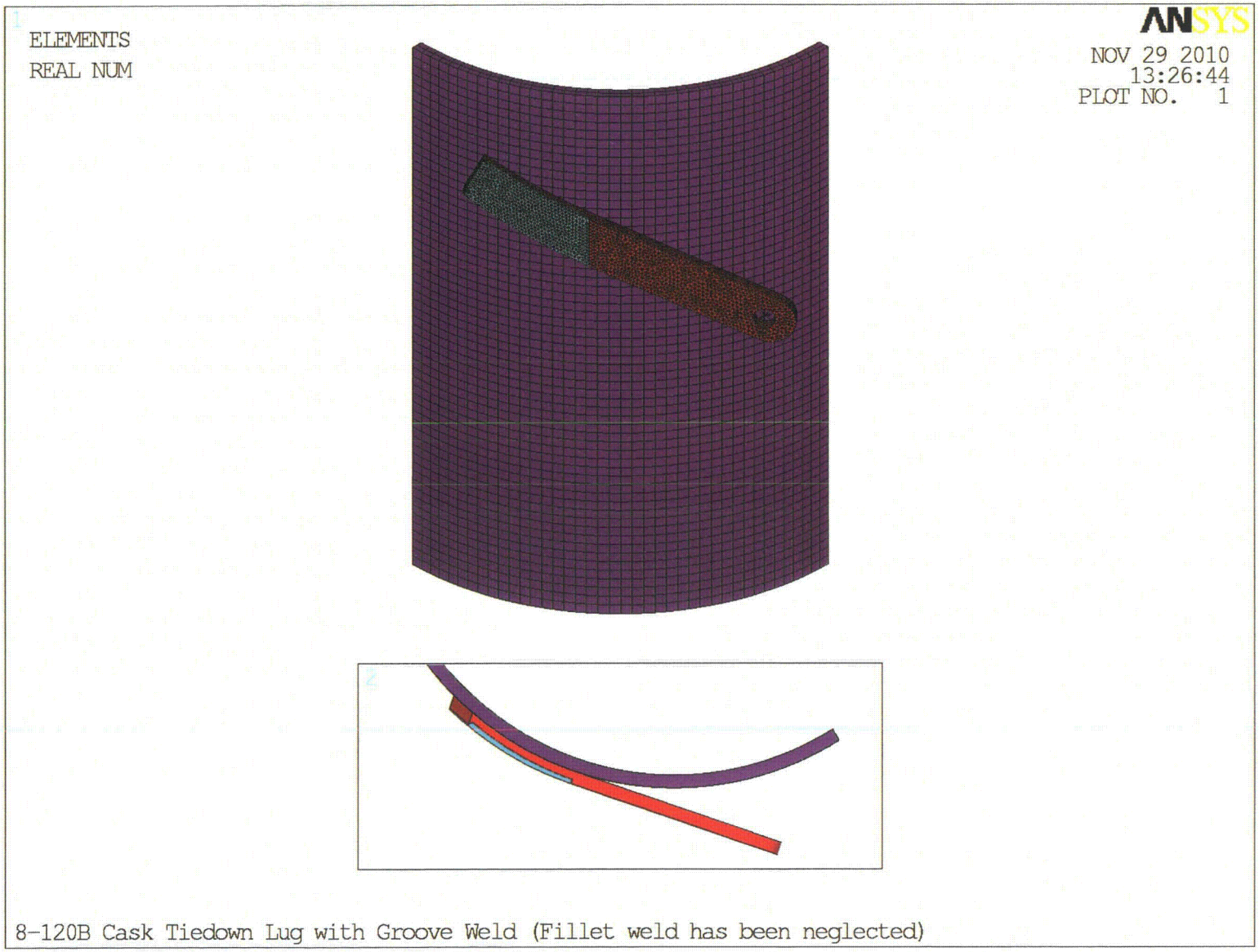

Figure 2-15
FEM of 8-120B Cask Outer Shell & Tie-Down Arm

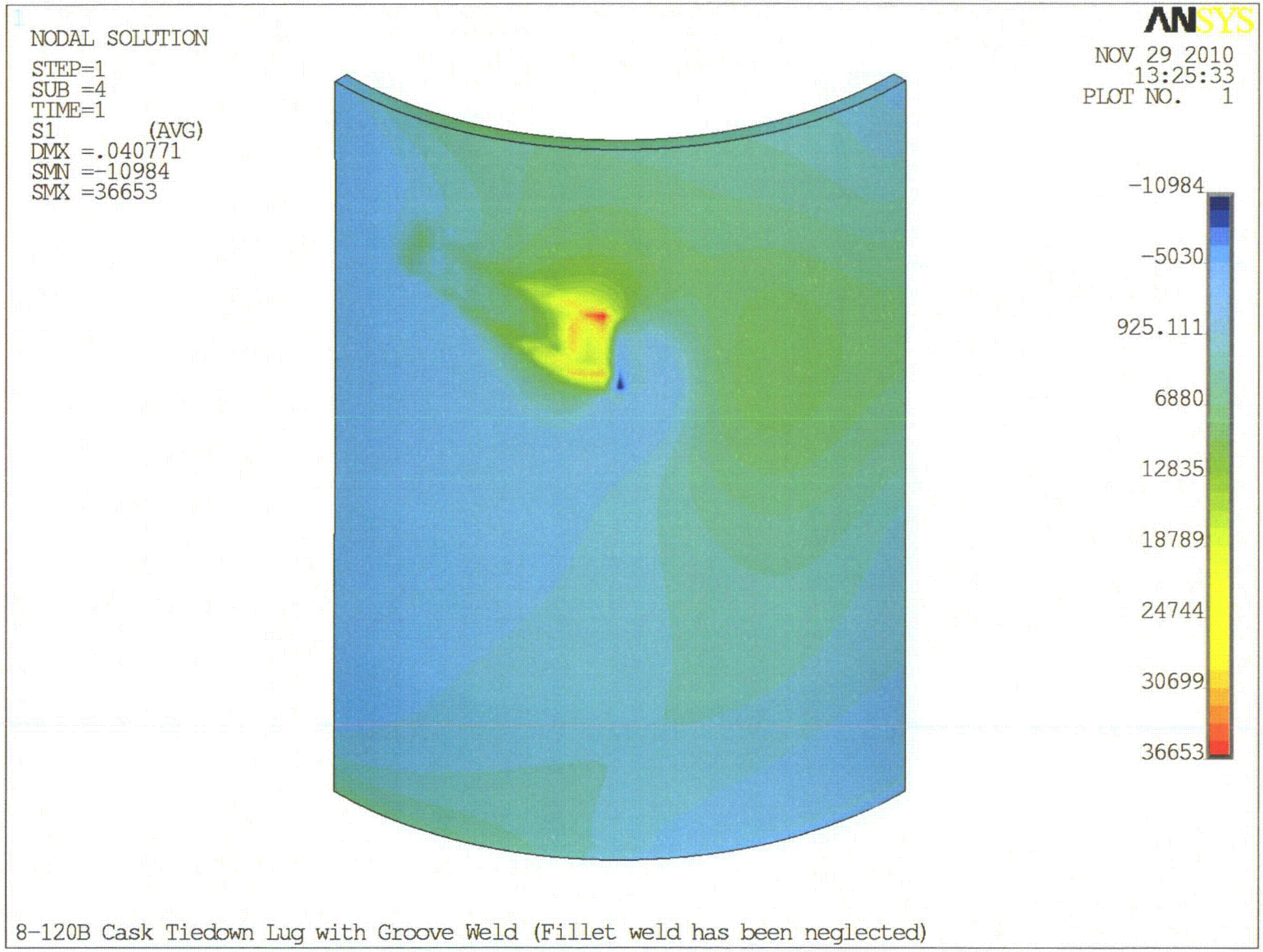

Figure 2-16
8-120B Cask Outer Shell Maximum Principal Stress

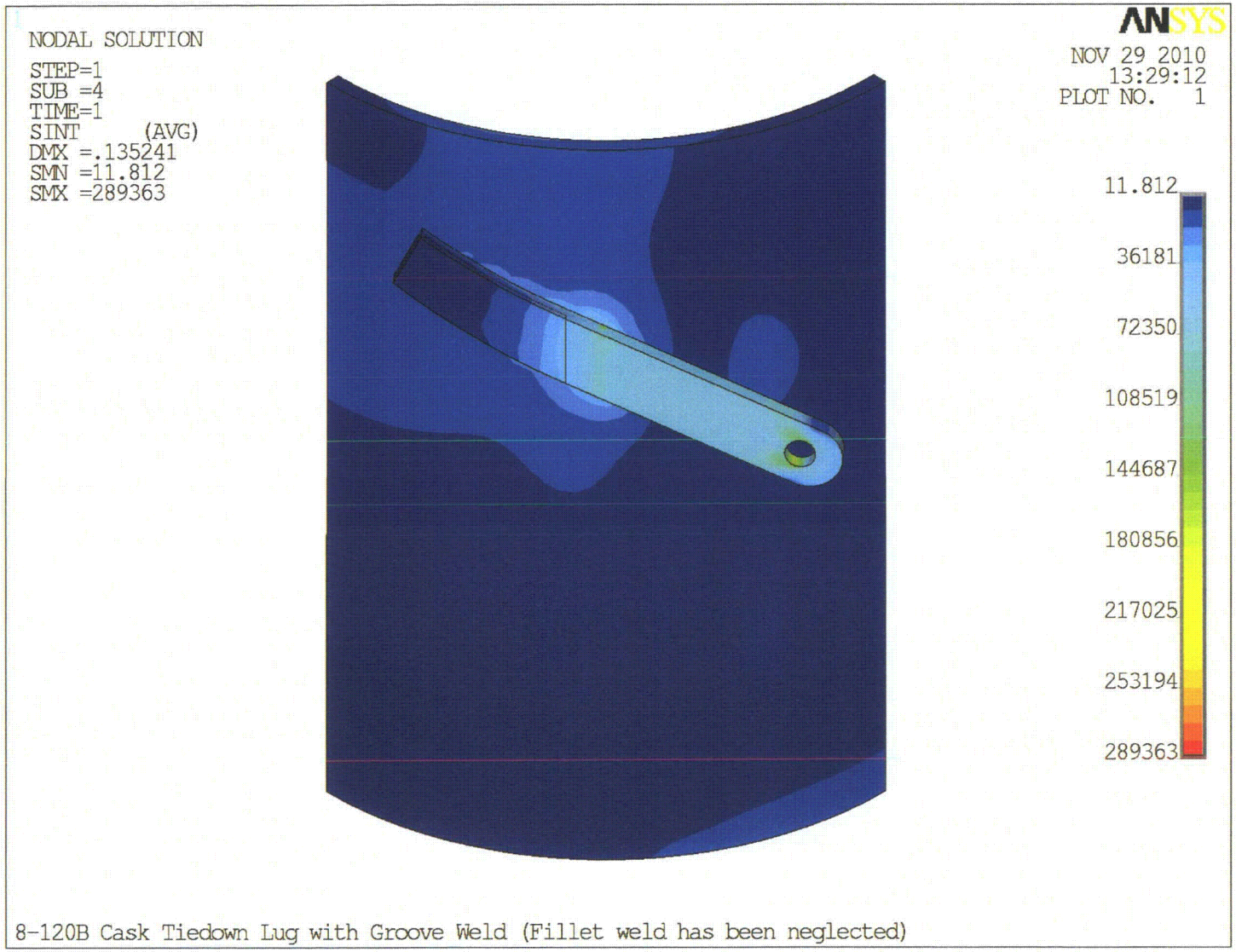

Figure 2-17
8-120B Cask Tie-Down Arm Maximum Stress Intensity
Note: The tie-down arm stresses shown in this figure include the local stresses at the point of load application and at the weld termination.

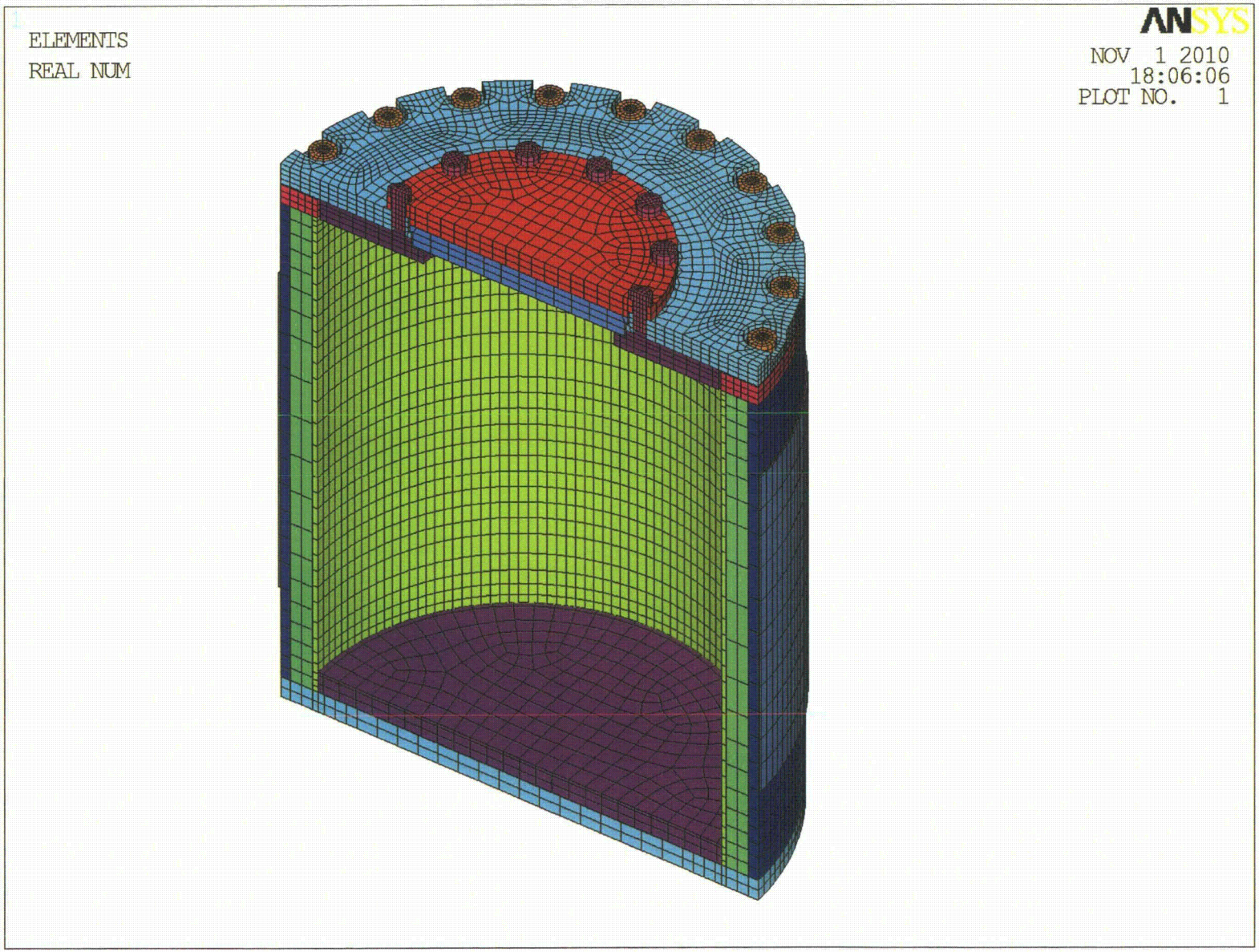

Figure 2-18
The finite element model used in the analyses

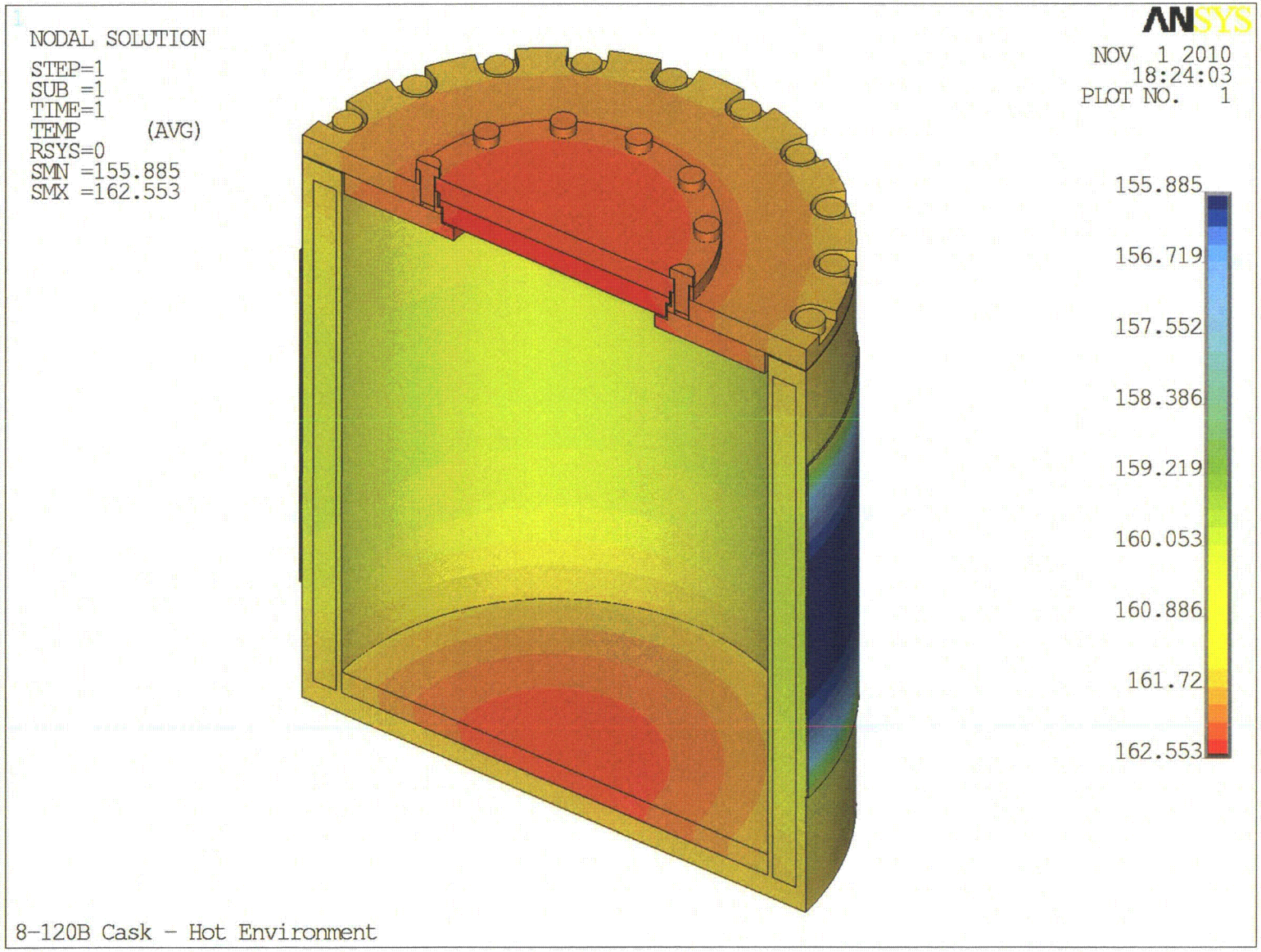

Figure 2-19
Temperature Distribution - Hot Environment Loading

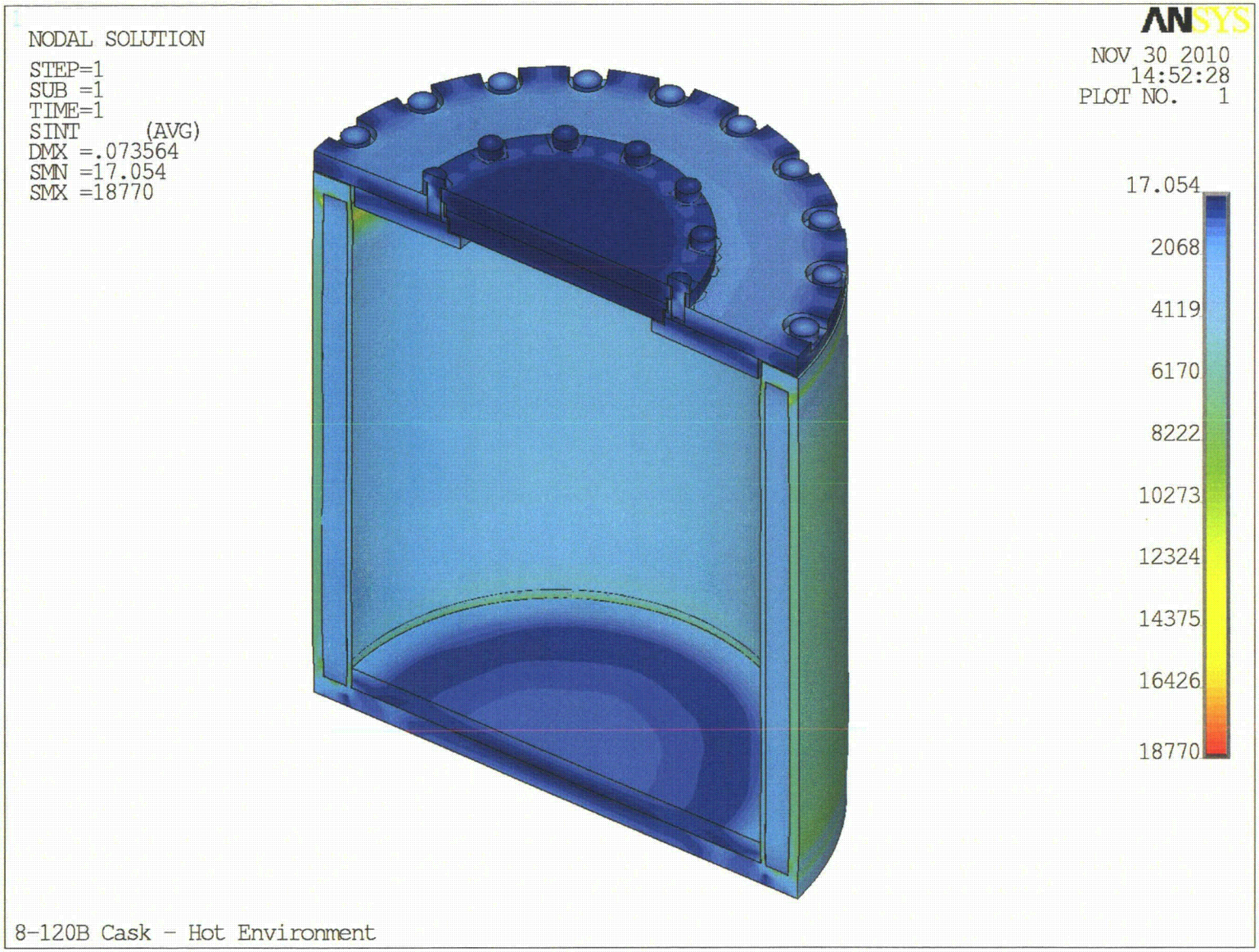

Figure 2-20

Stress Intensity Contour Plot - Hot Environment Loading

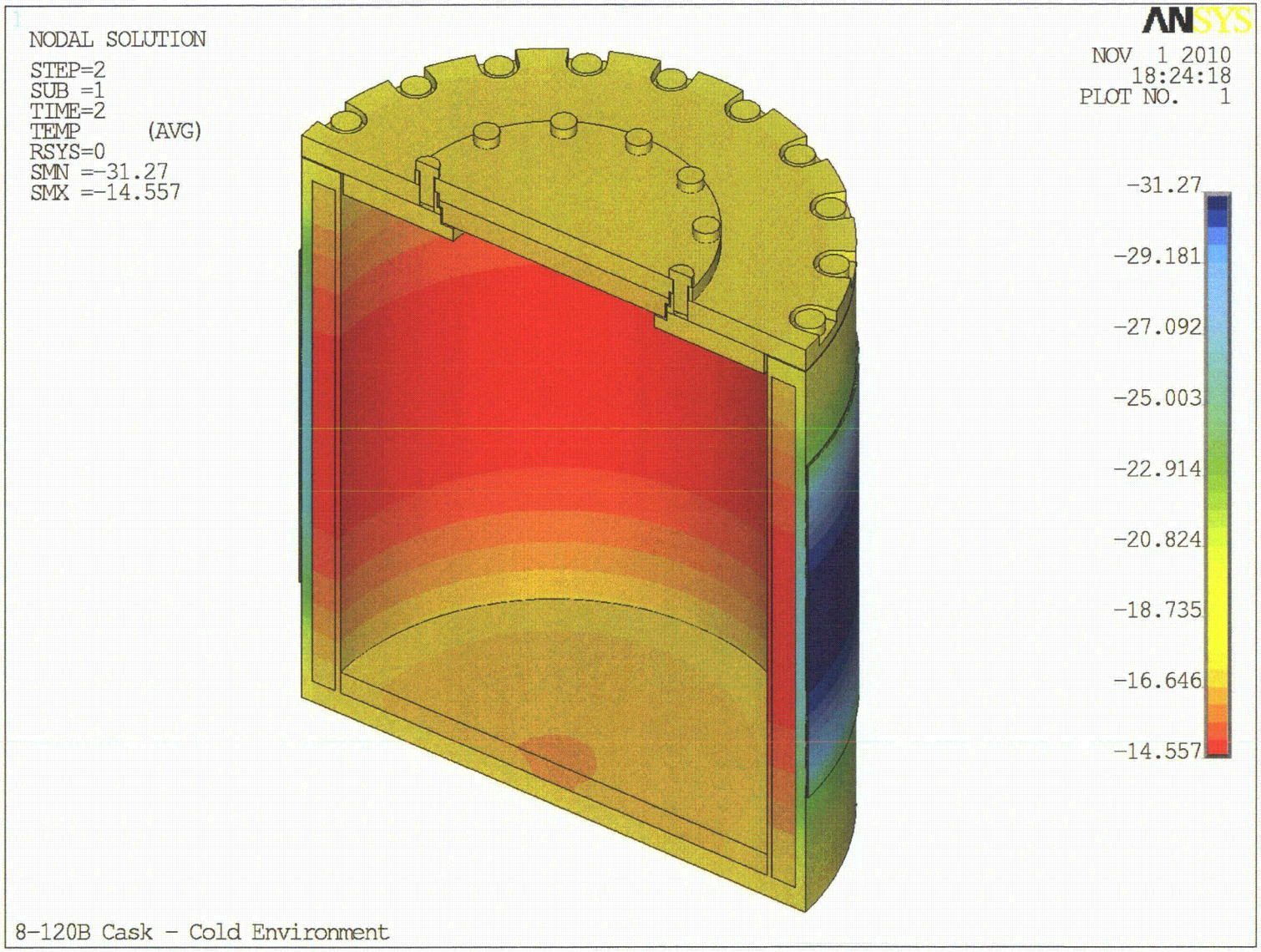

Figure 2-21

Temperature Distribution - Cold Environment Loading

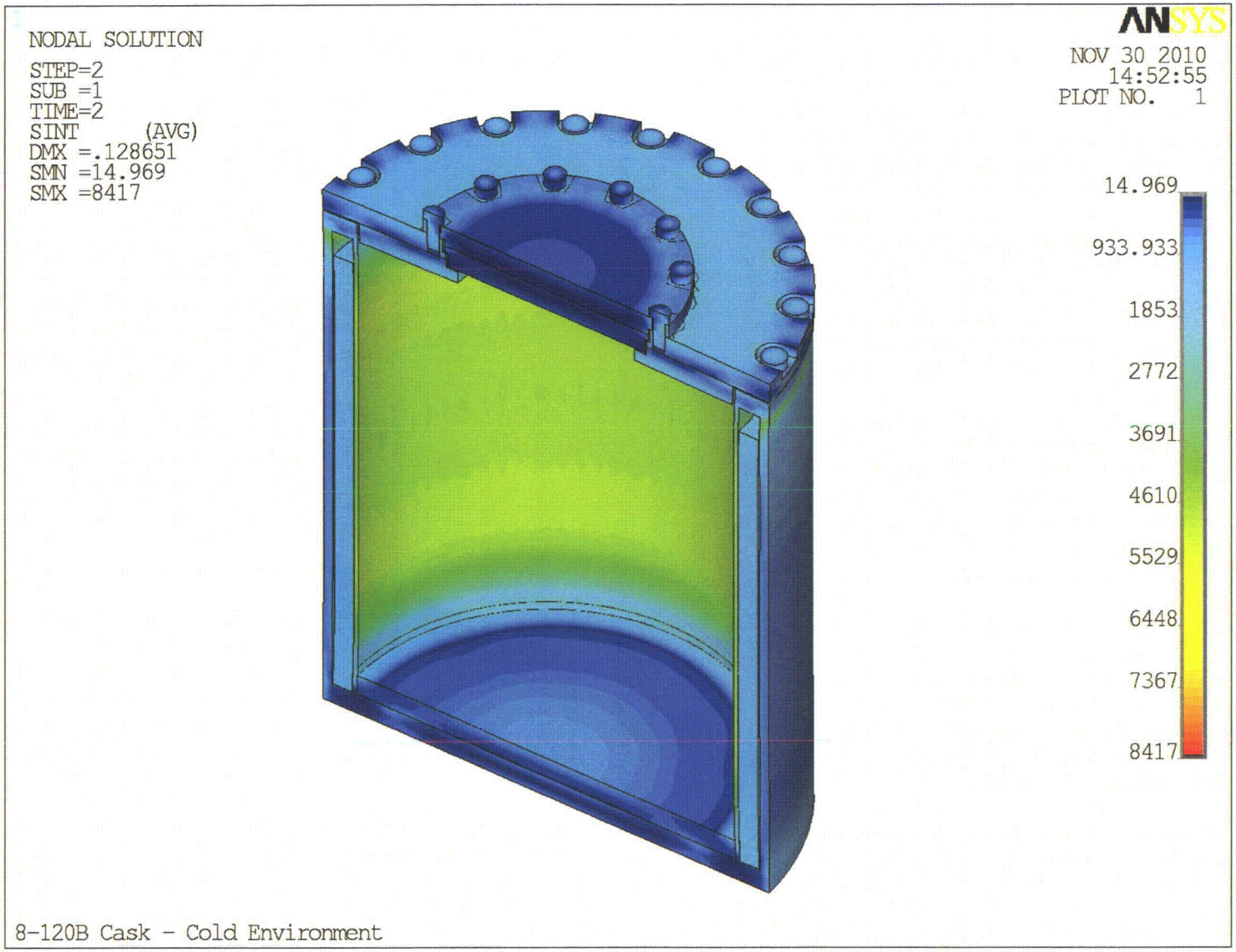

Figure 2-22

Stress Intensity Contour Plot - Cold Environment Loading

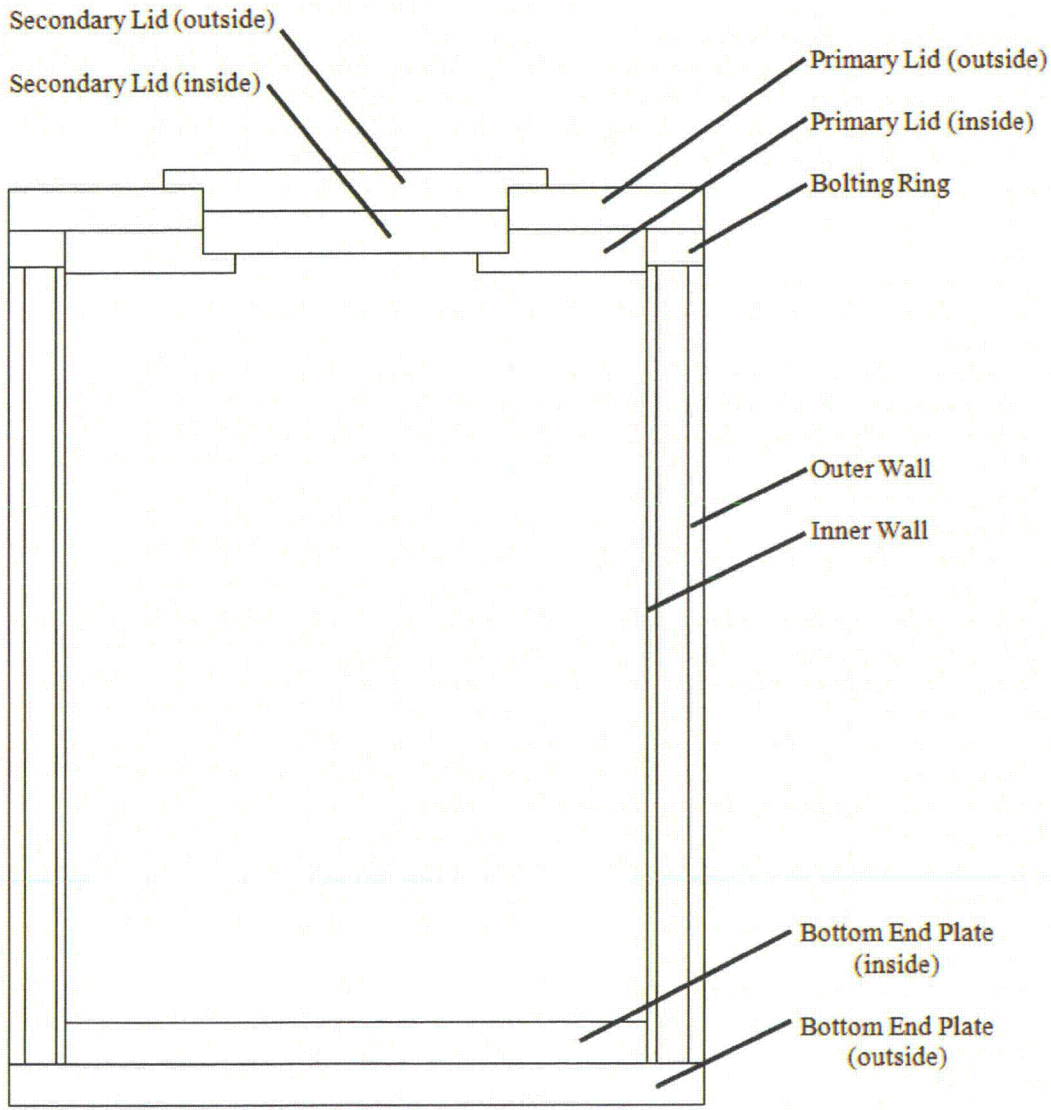

Figure 2-23

Fracture Critical Cask Components

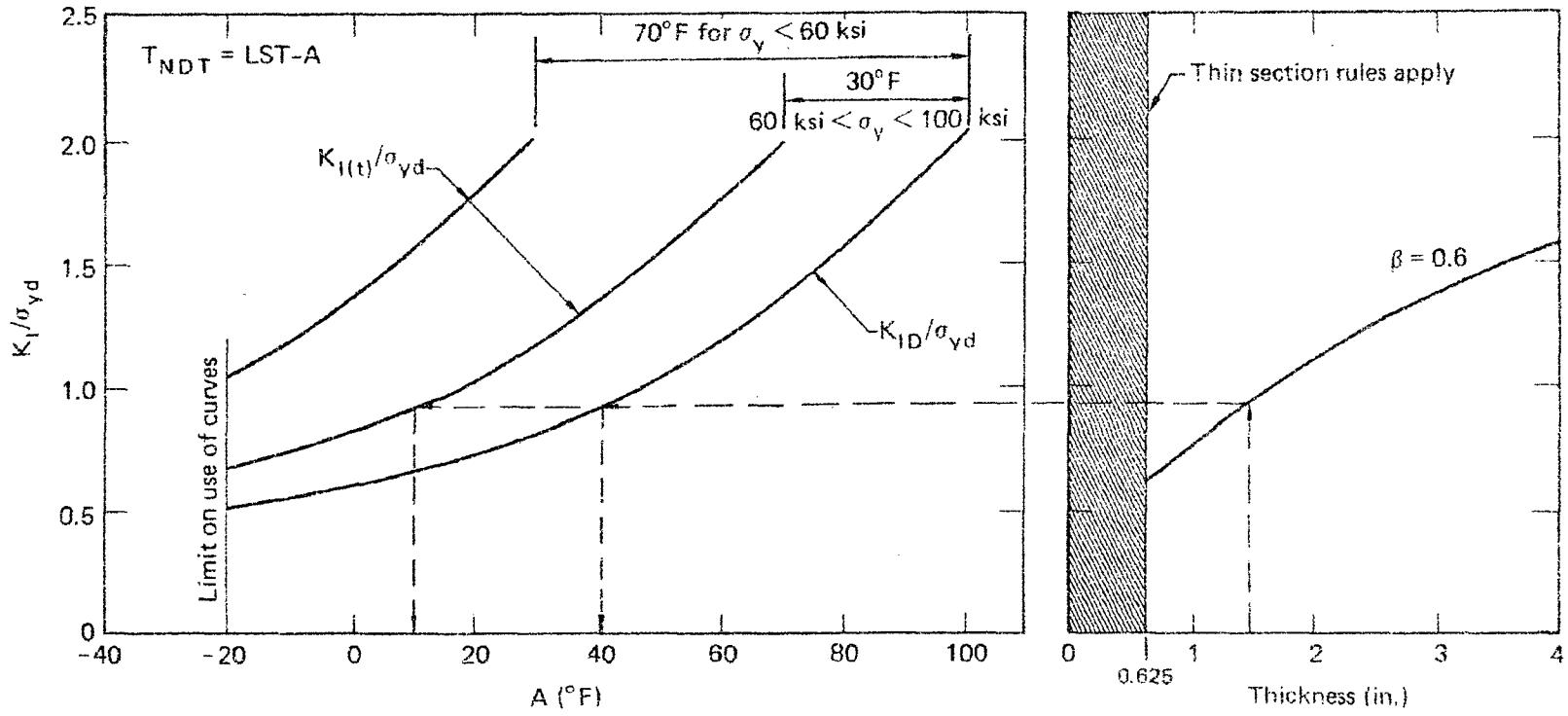

Figure 2-24
Design Chart for Category II Fracture Critical Components (From Figure 7 of Reference 2-18)

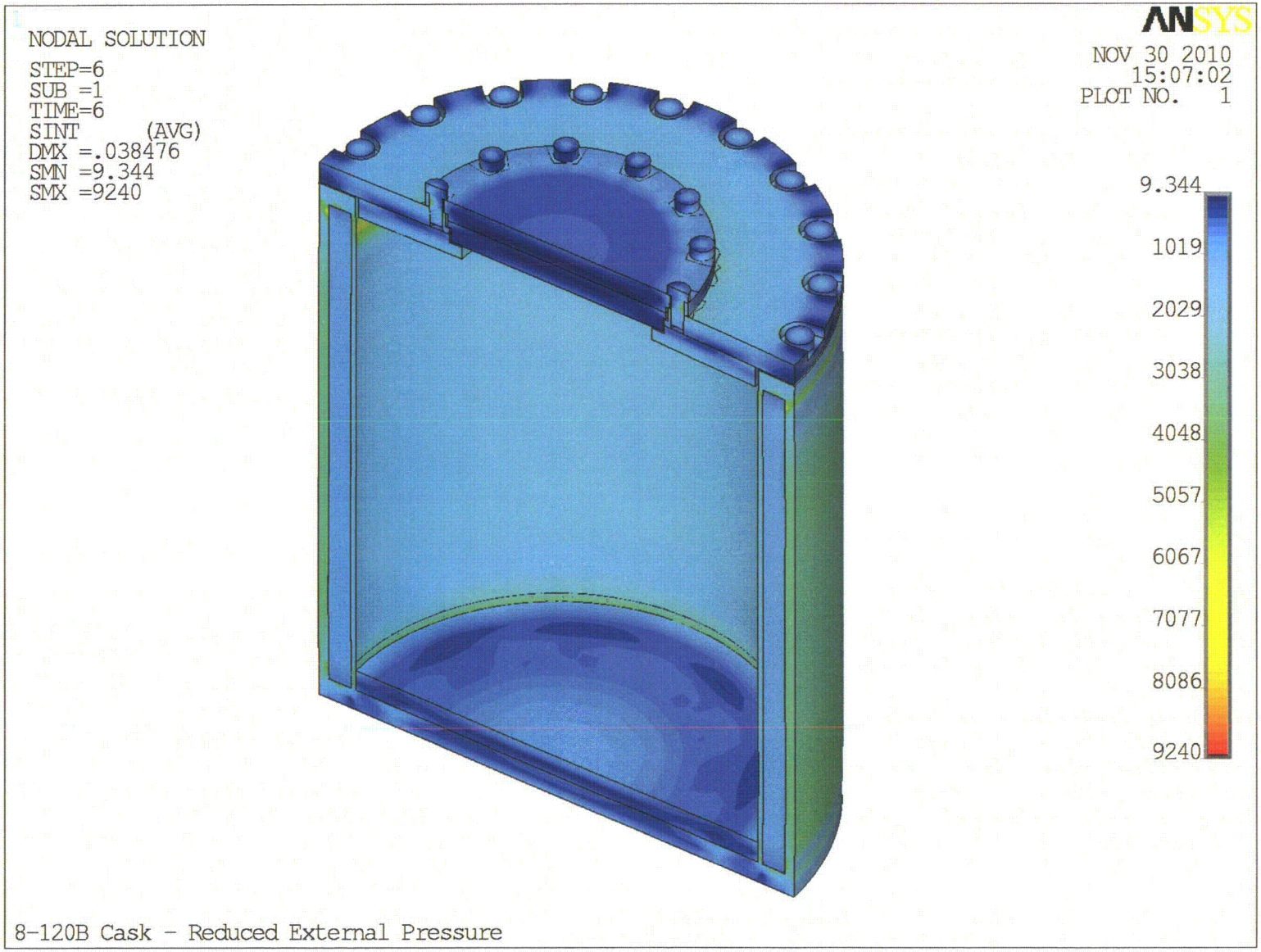

Figure 2-25

Stress Intensity Contour Plot - Reduced External Pressure Loading

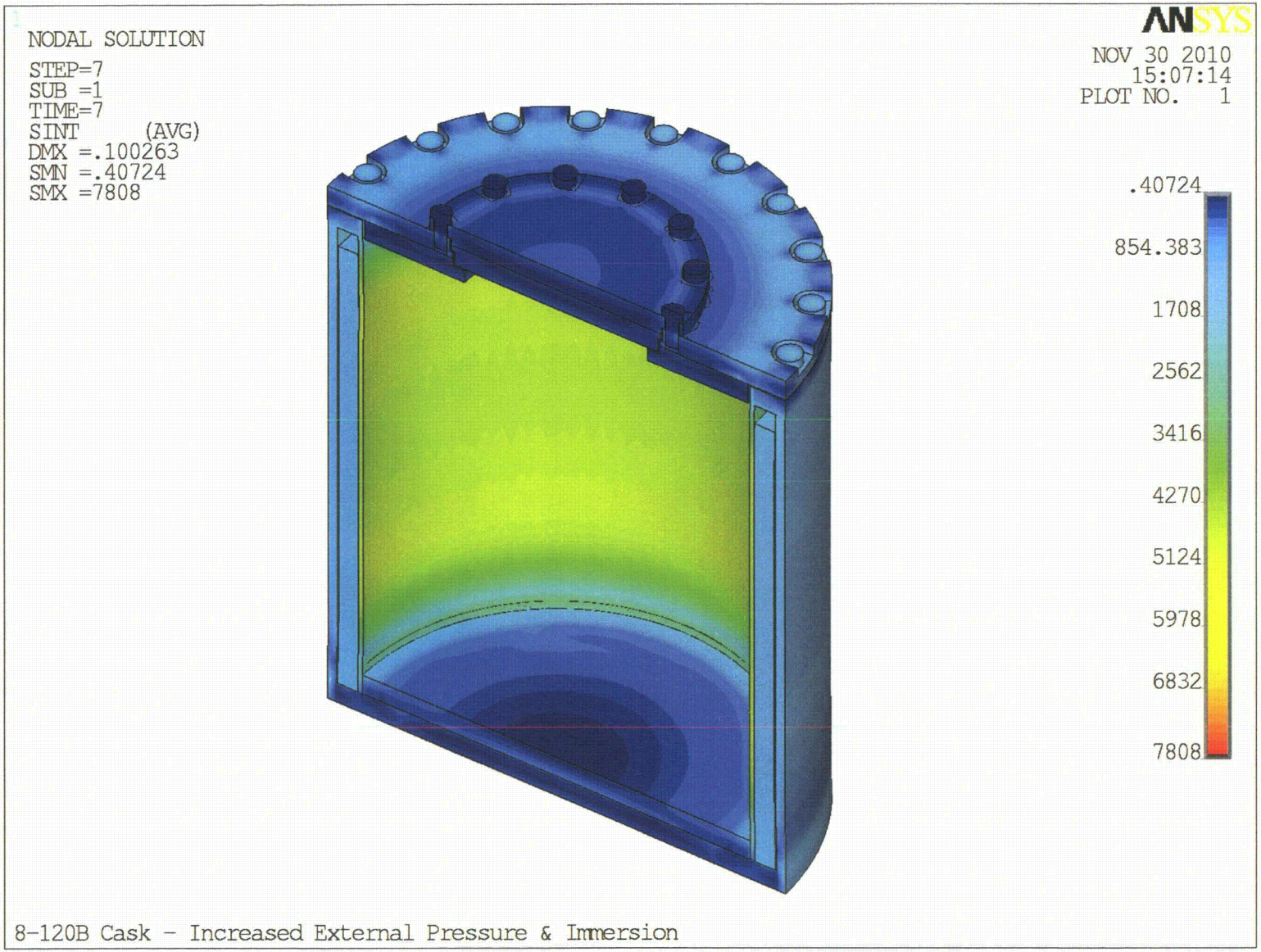

Figure 2-26
Stress Intensity Contour Plot - Increased External Pressure and Immersion Loading

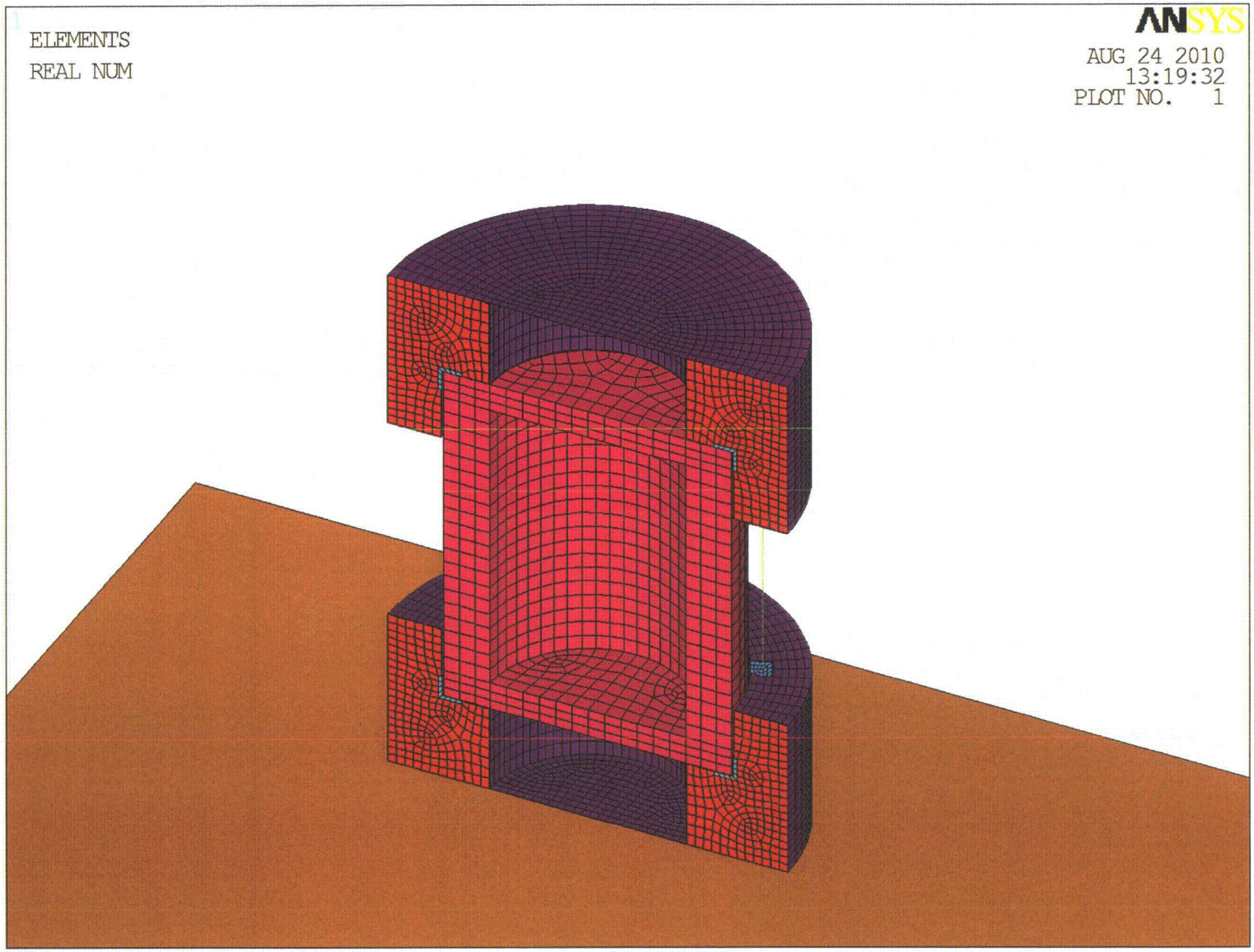

Figure 2-27
LS-DYNA Model of the 8-120B Cask & Rigid Pad

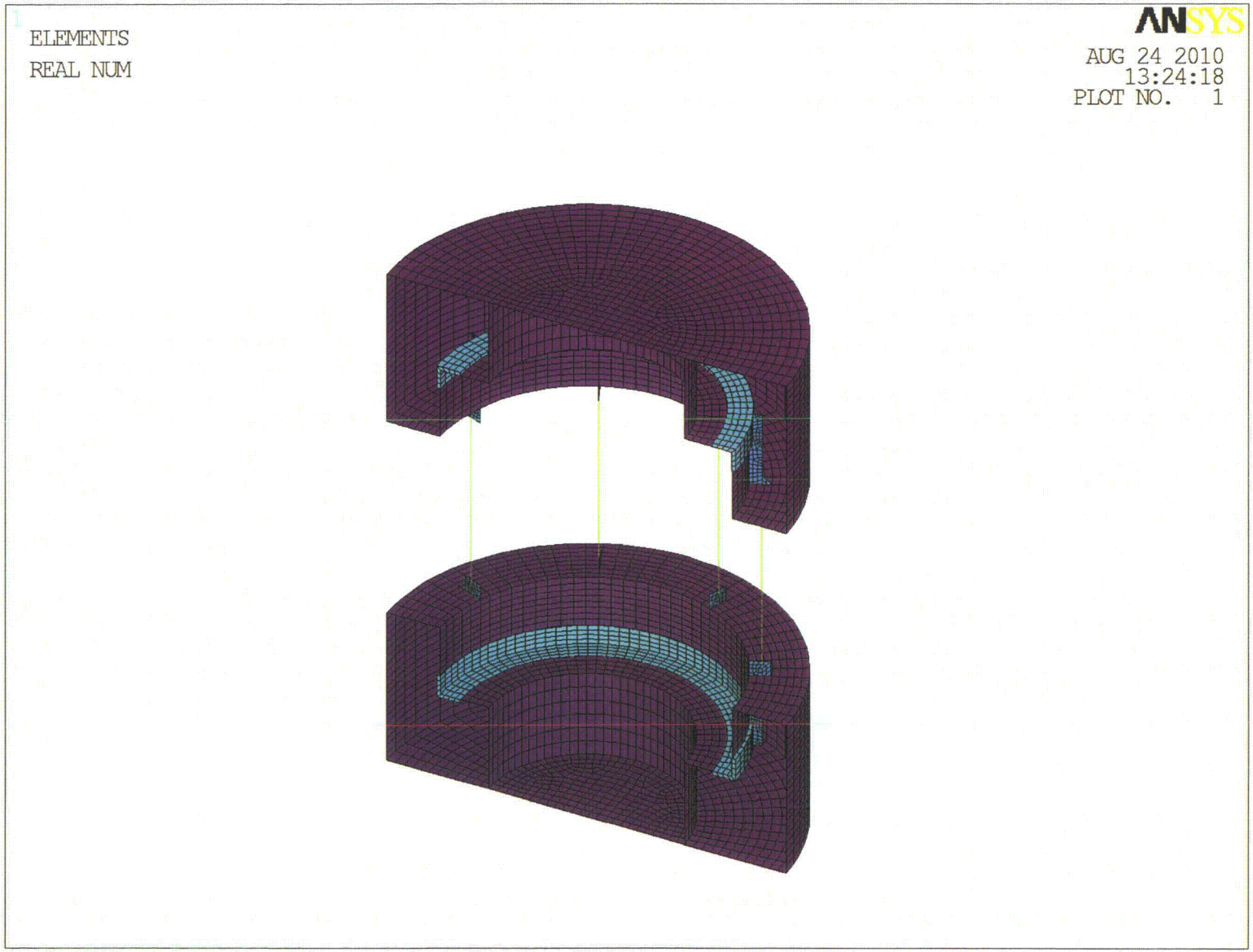

Figure 2-28
The finite element model for the drop tests

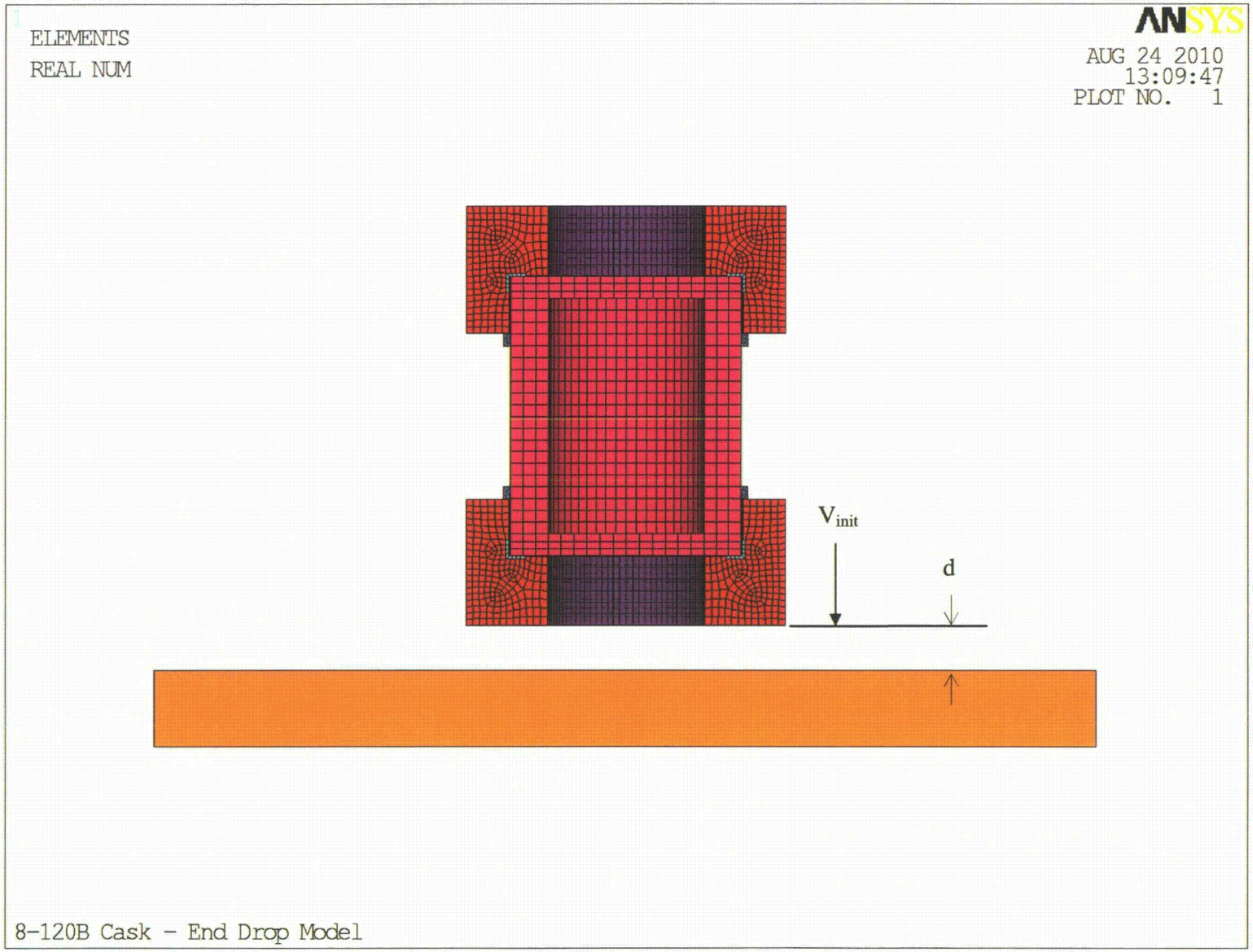

Figure 2-29

End Drop – The cask axis parallel to the drop direction

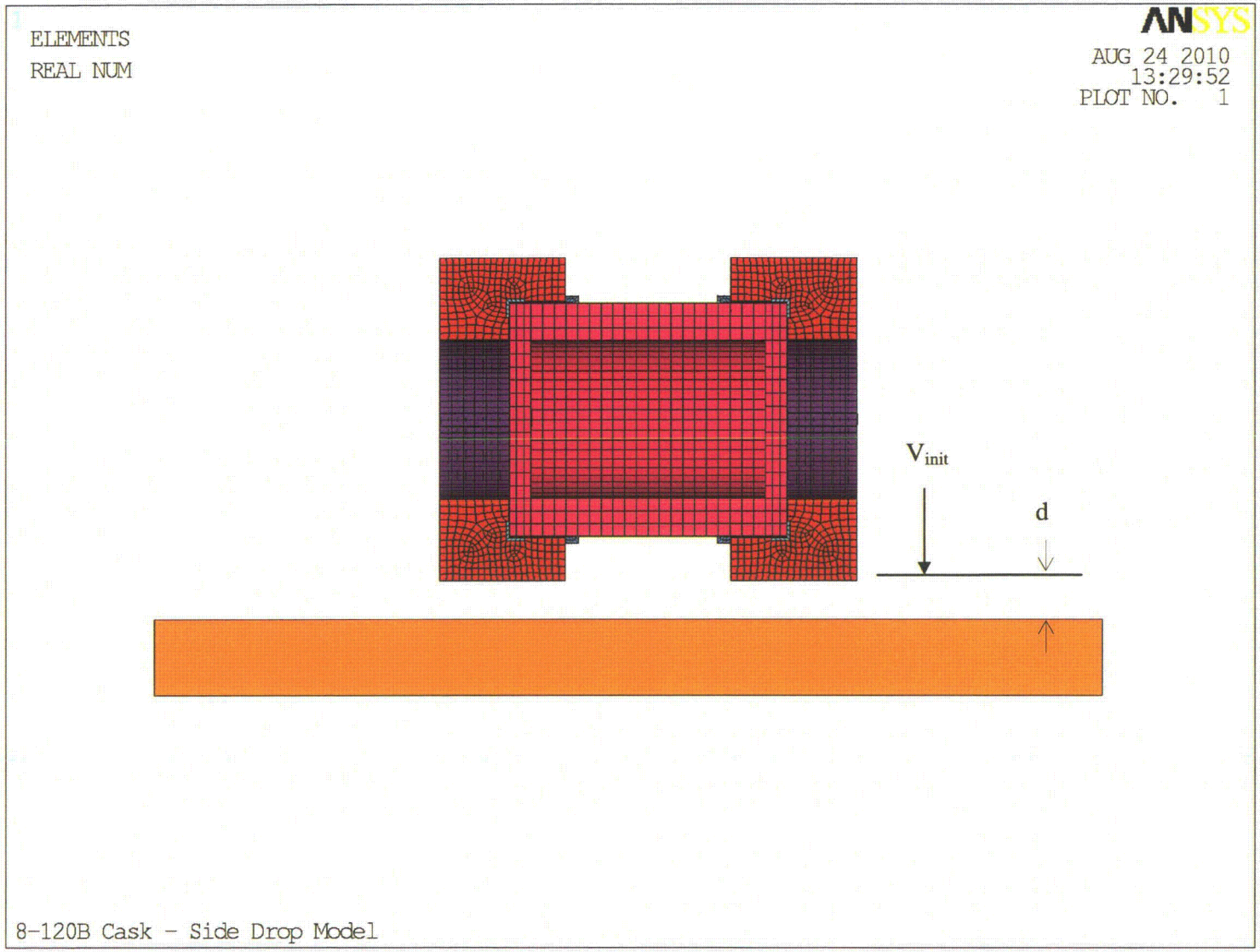

Figure 2-30

Side Drop – The cask axis perpendicular to the drop direction

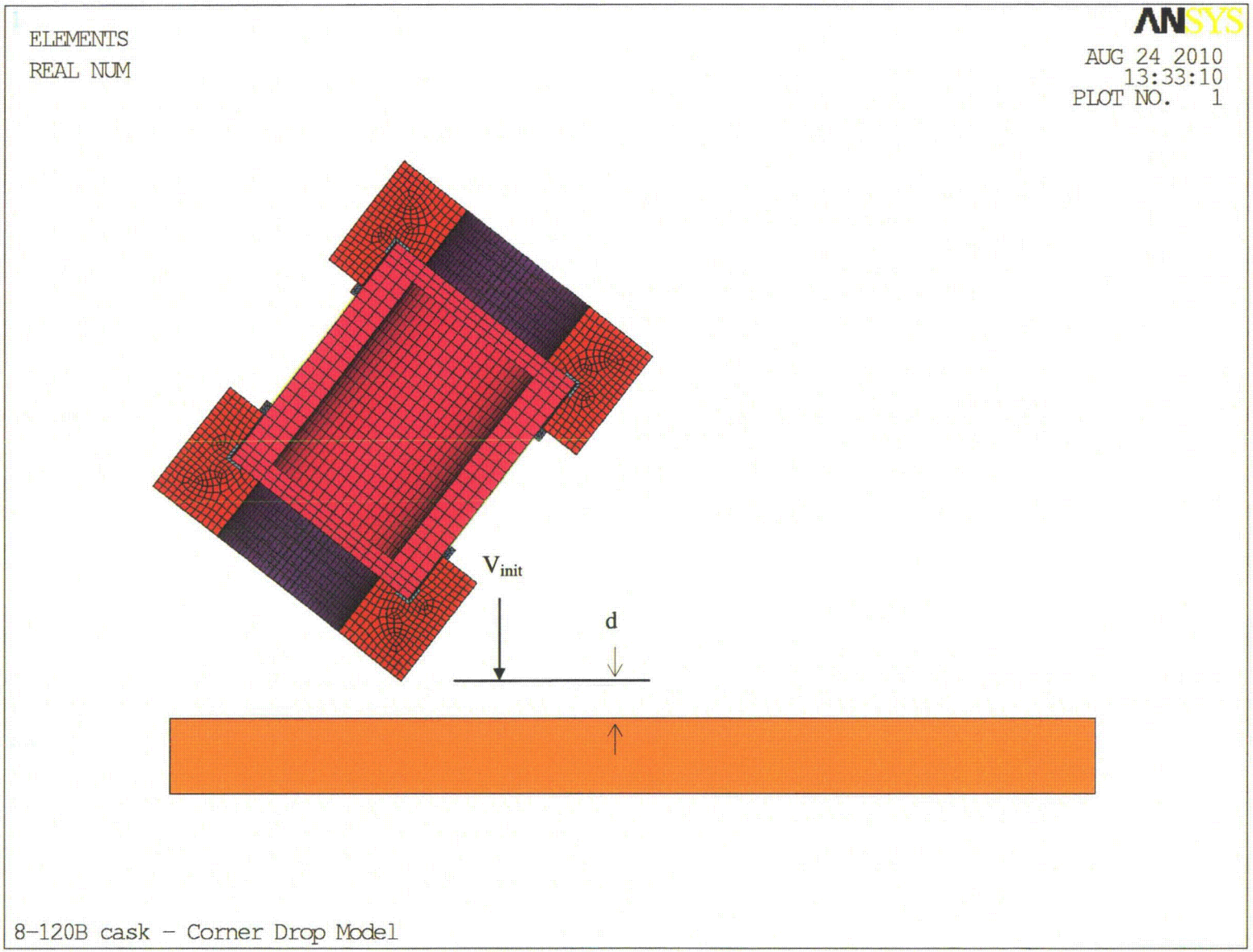

Figure 2-31

Corner Drop – The C.G. of the cask directly over the impact point.

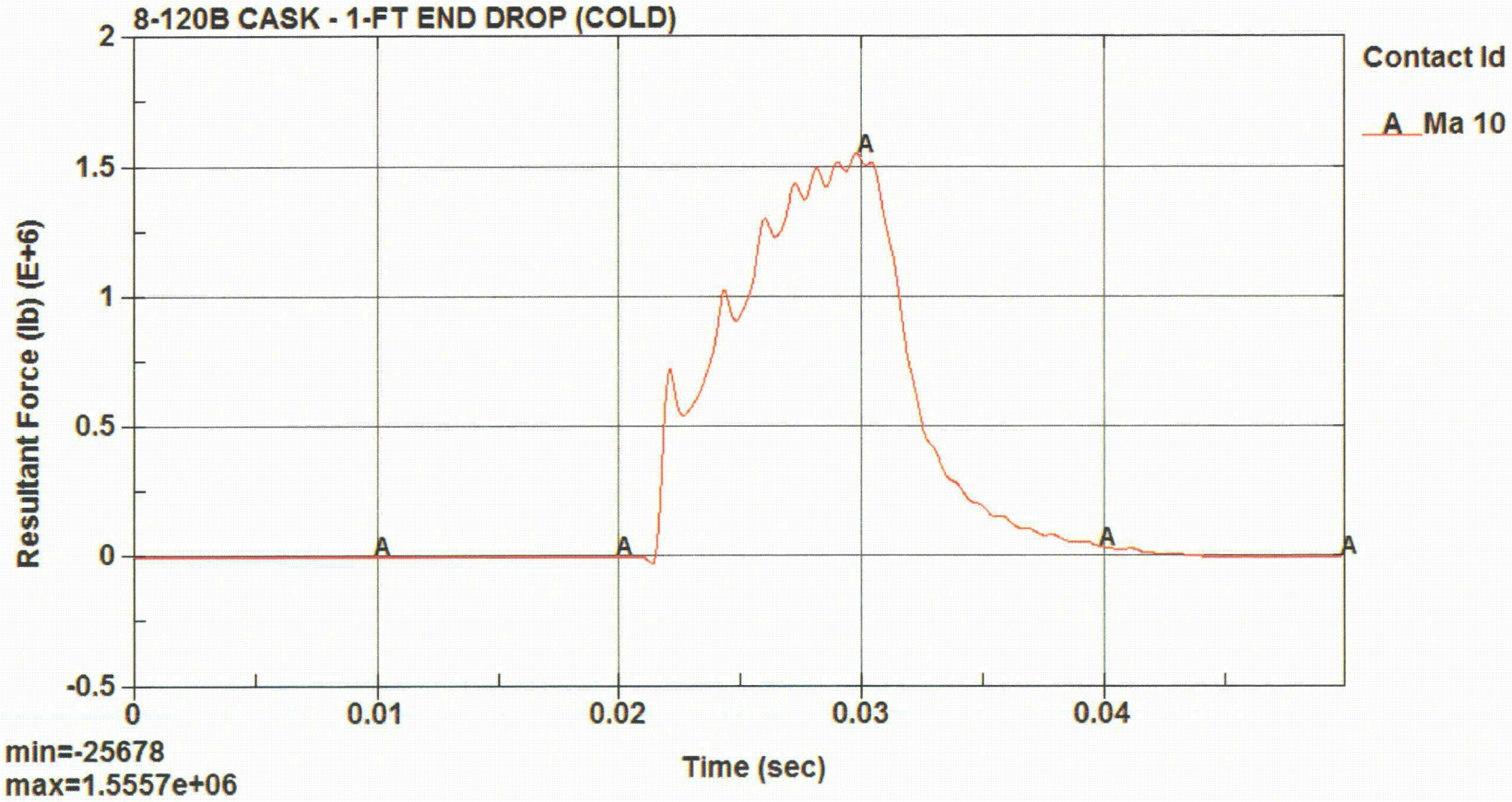

Figure 2-32
Time-History Result, 1-Ft End Drop, Cold Condition (Resultant Force Plot)

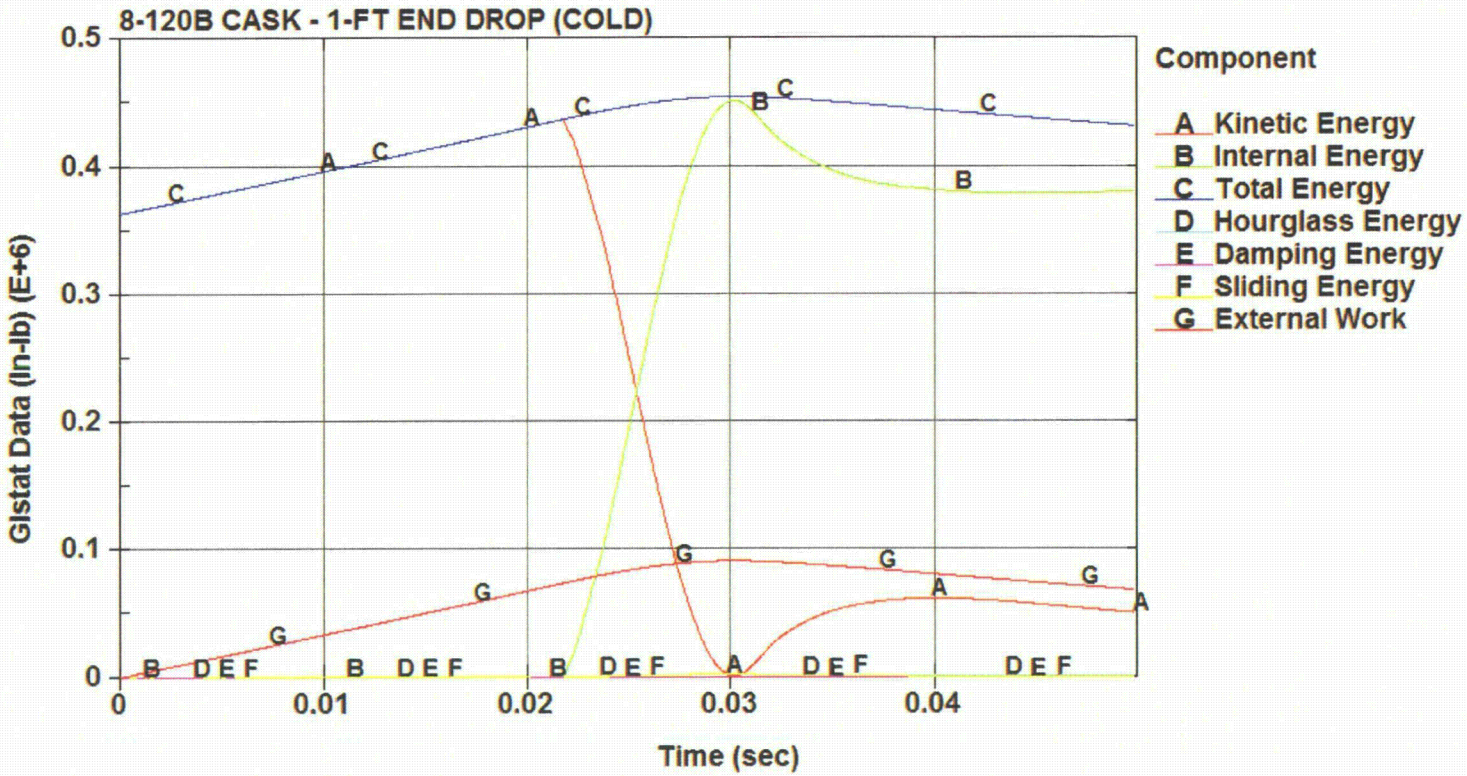

Figure 2-33
Time-History Result, 1-Ft End Drop, Cold Condition (Energy Plots)

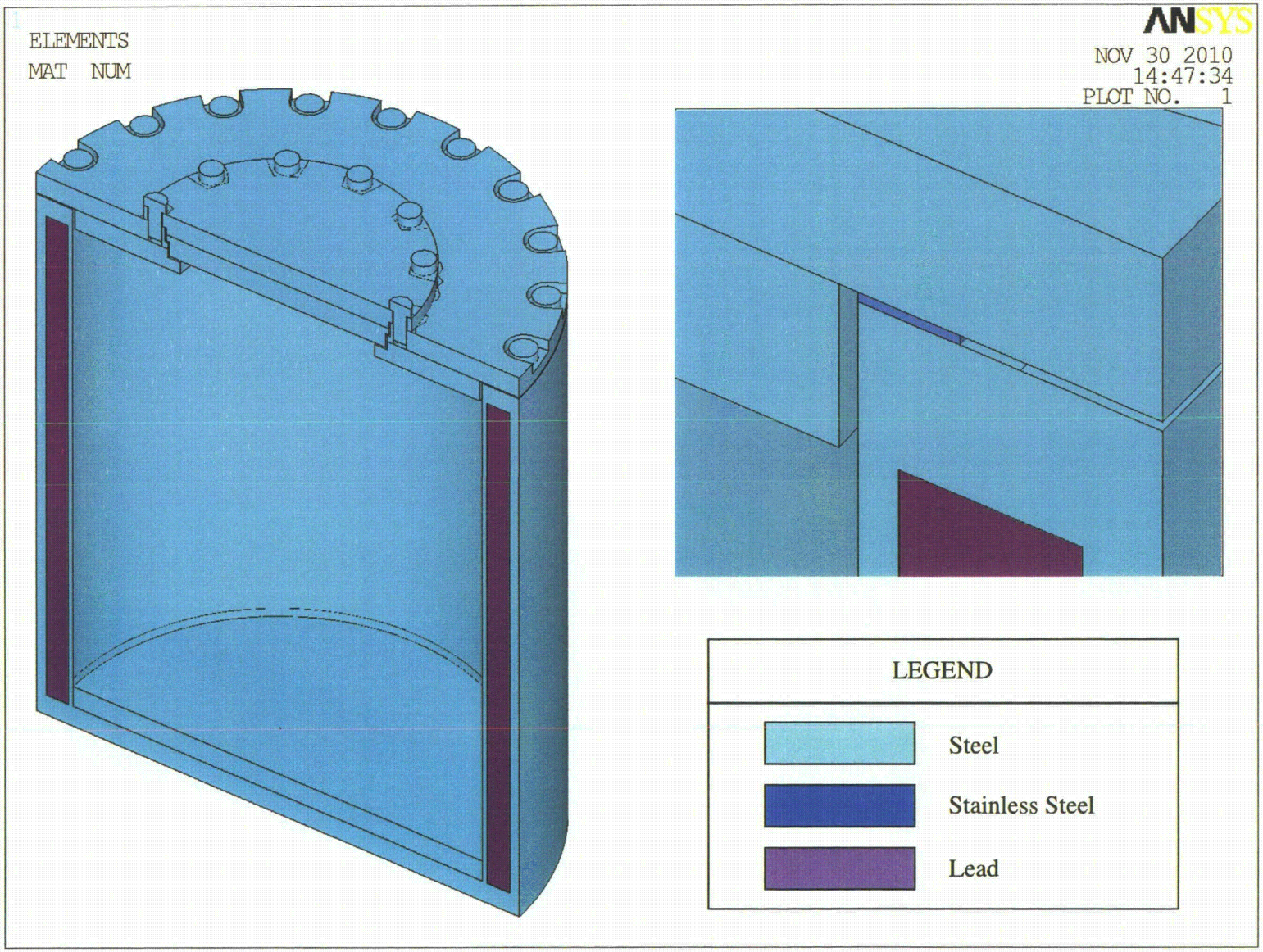

Figure 2-34
Finite Element Model of the 8-120B Cask Identifying the Cask Components with Material Numbers

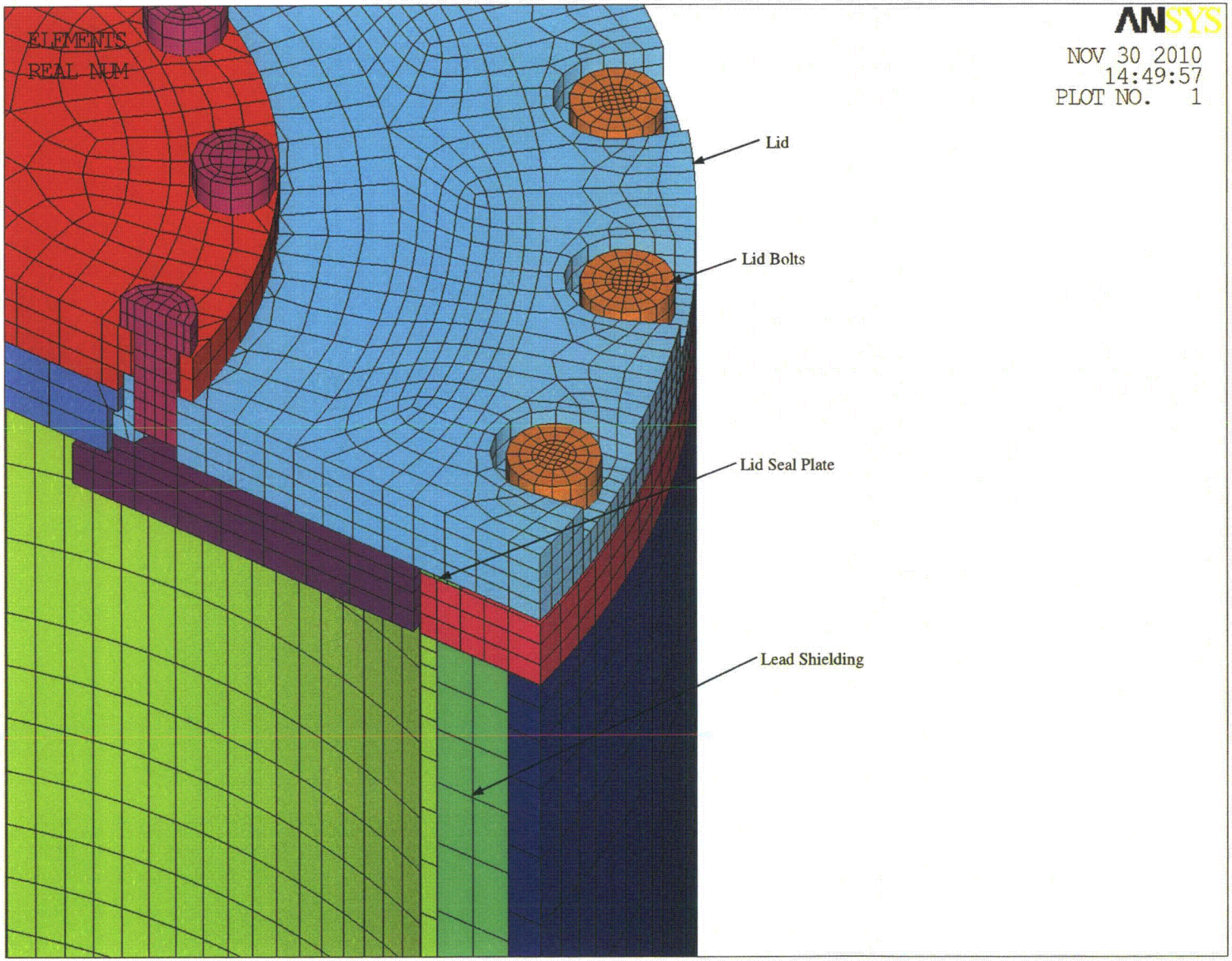

Figure 2-35
The finite element grid of the lid, seal plate, bolts, and the cask

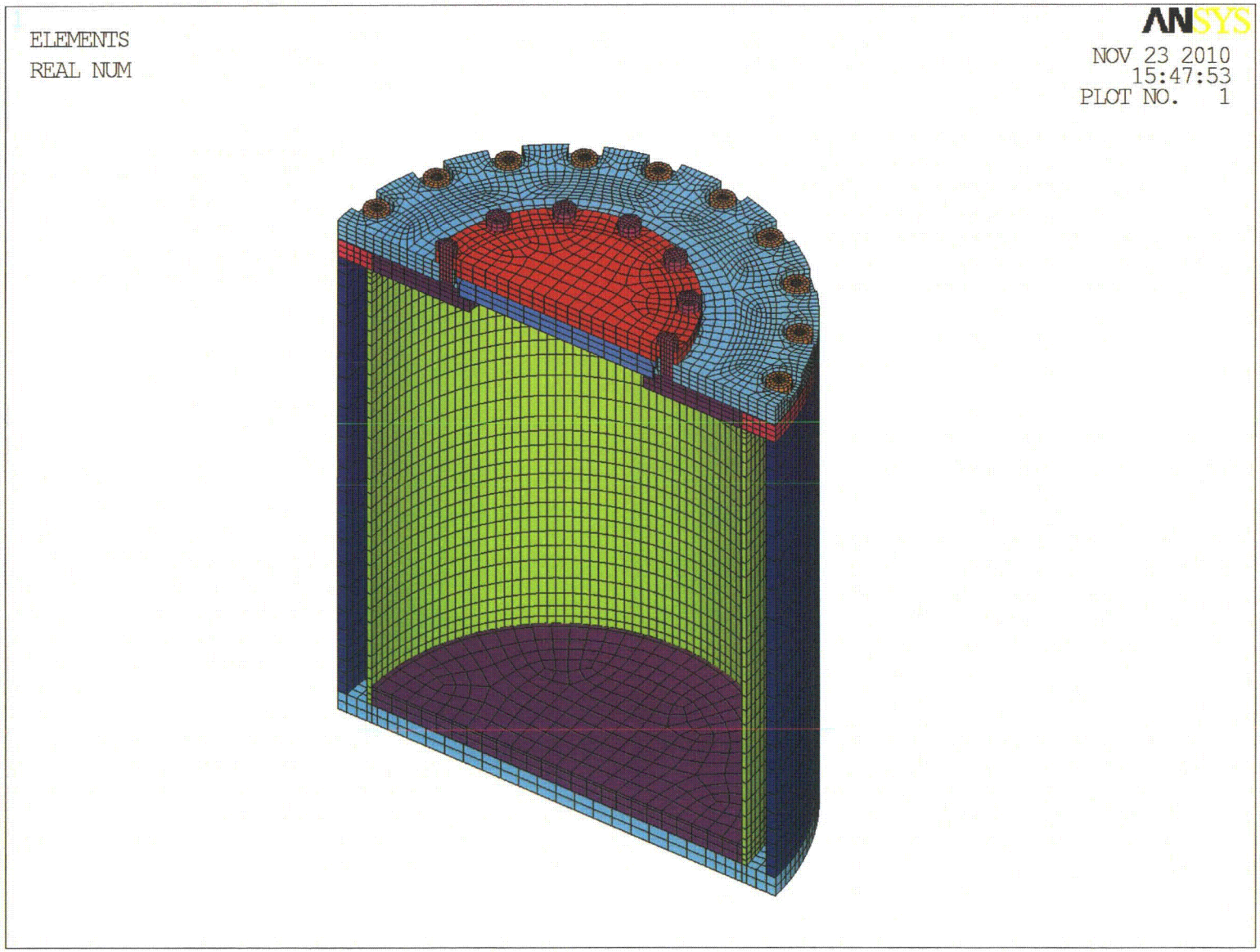

Figure 2-36
The finite element grid of the cask body without the lead

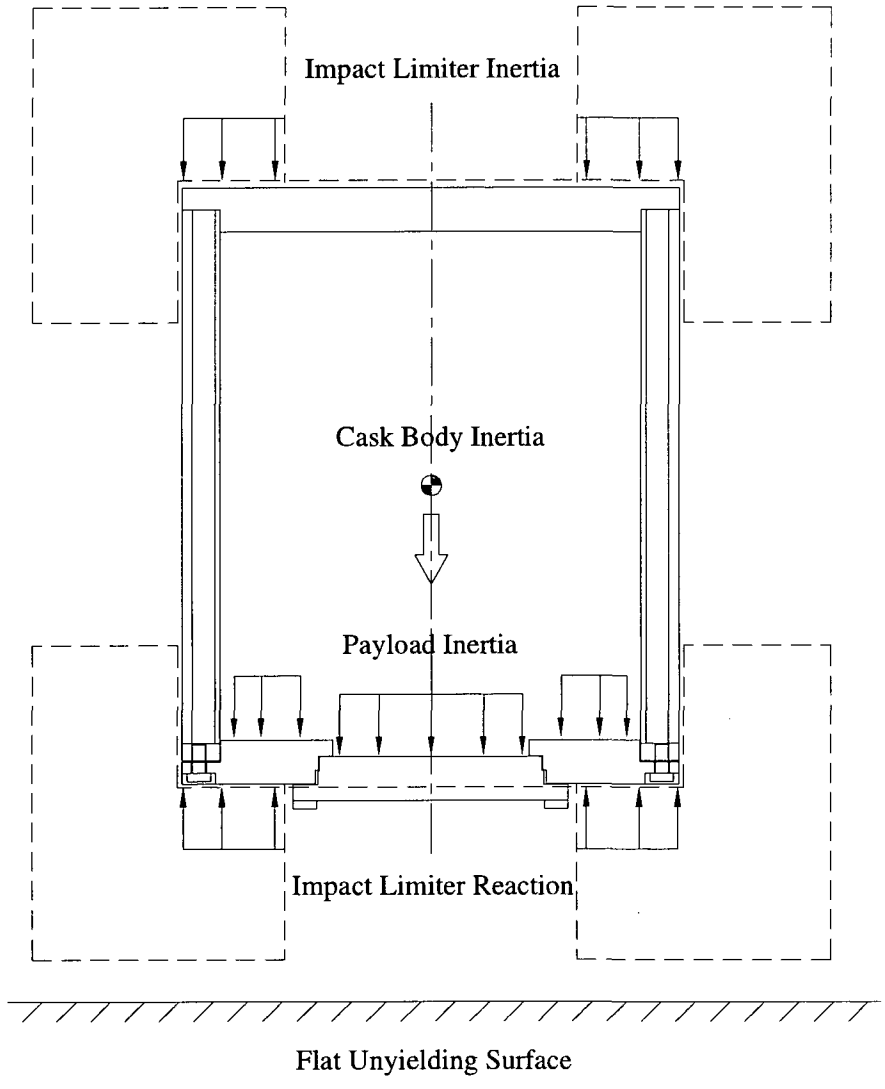

Figure 2-37
Load Distribution on the Model During End Drop

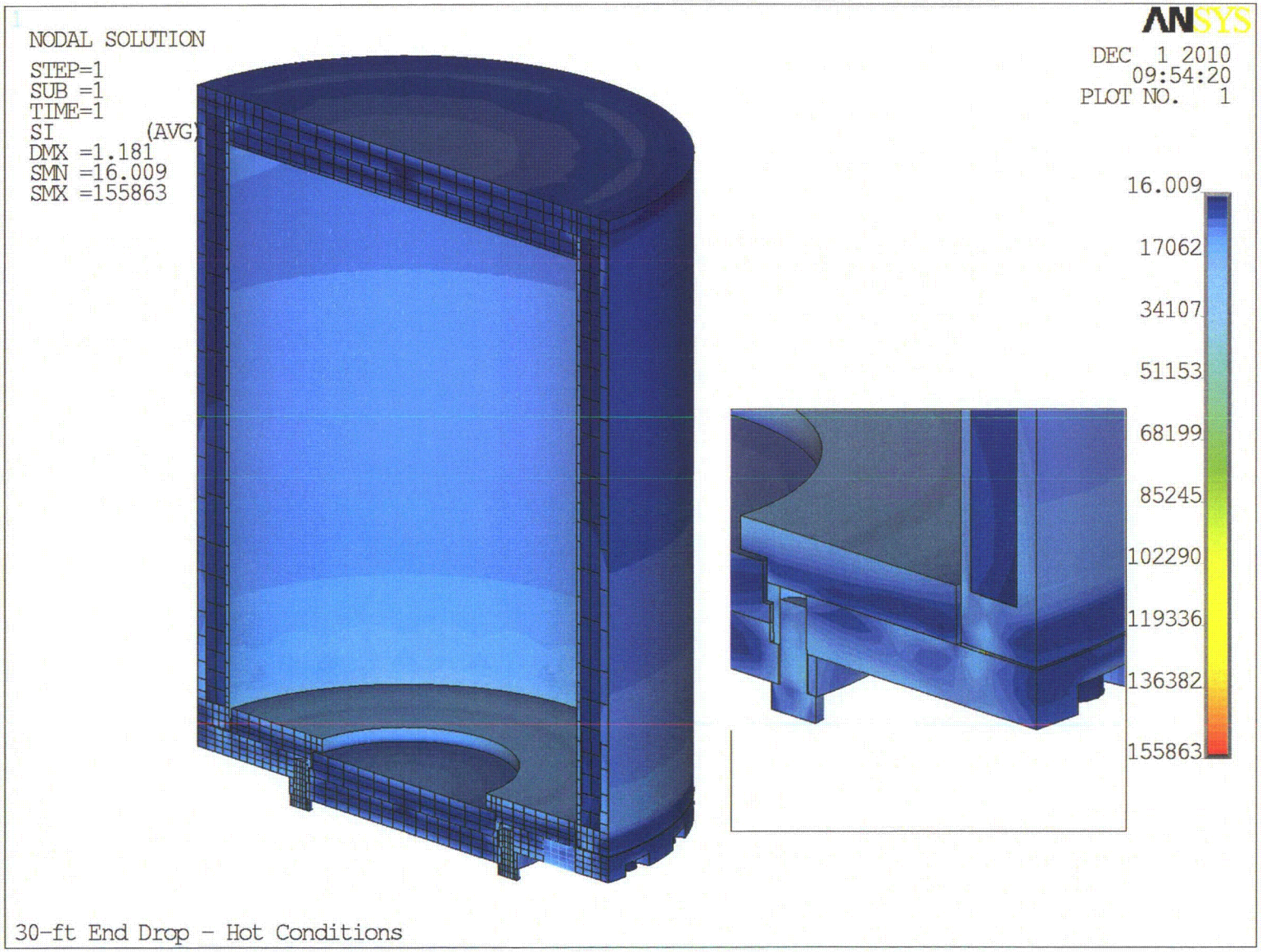

Figure 2-38
Stress Intensity Plot – 30-ft End Drop – Hot Condition

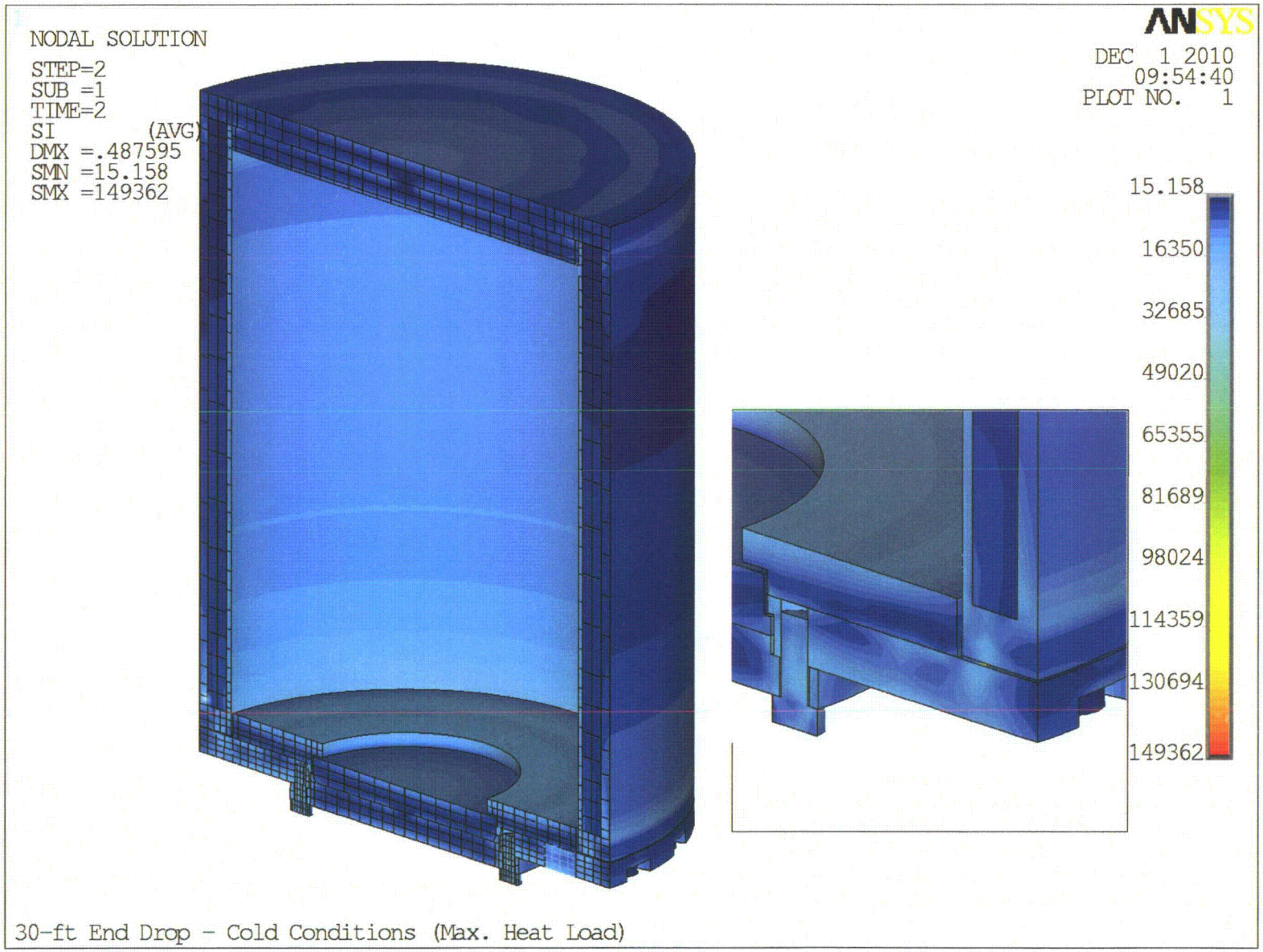

Figure 2-39
Stress Intensity Plot – 30-ft End Drop – Cold Condition (Max. Heat Load)

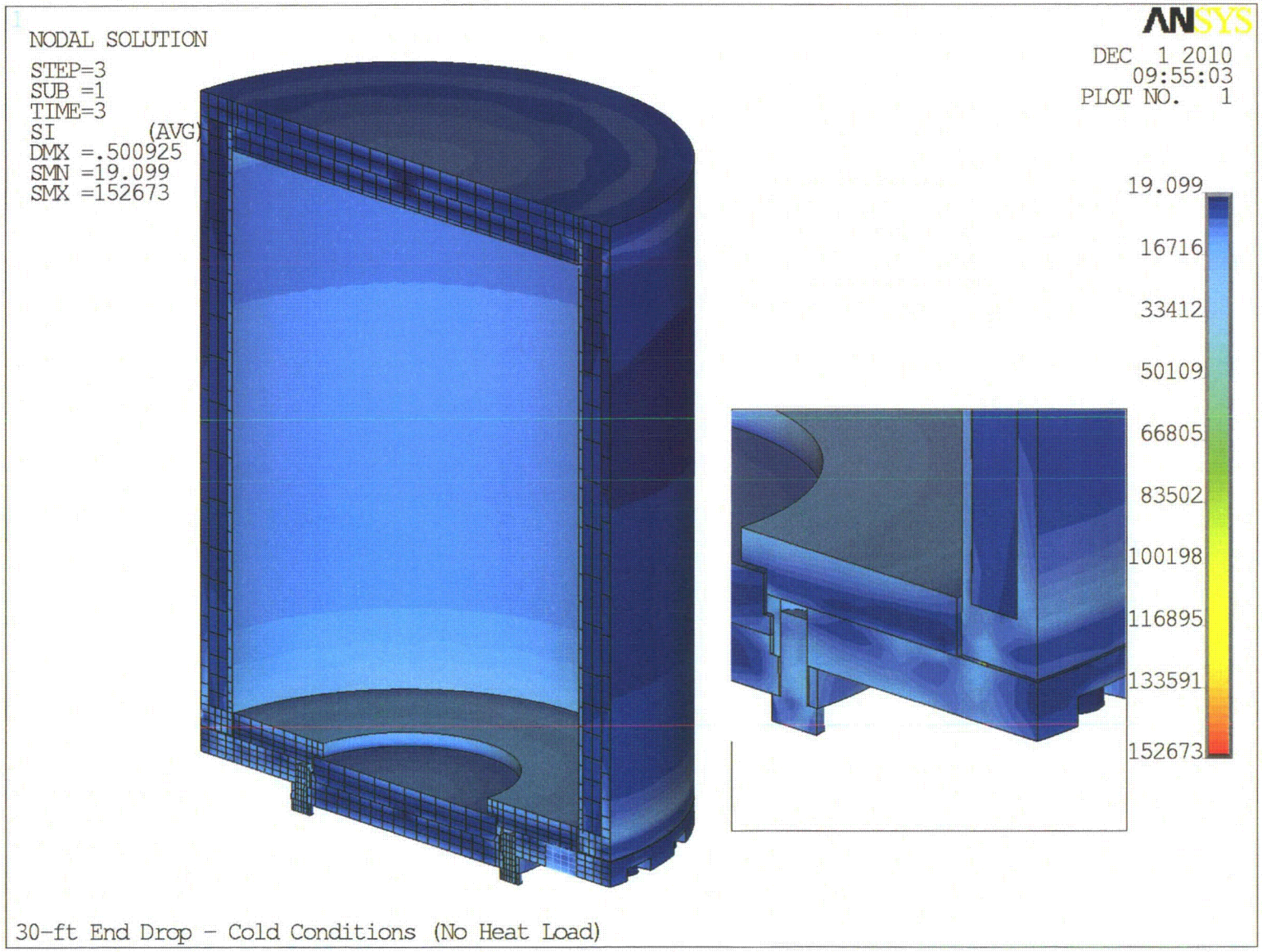

Figure 2-40
Stress Intensity Plot – 30-ft End Drop – Cold Condition (No Heat Load)

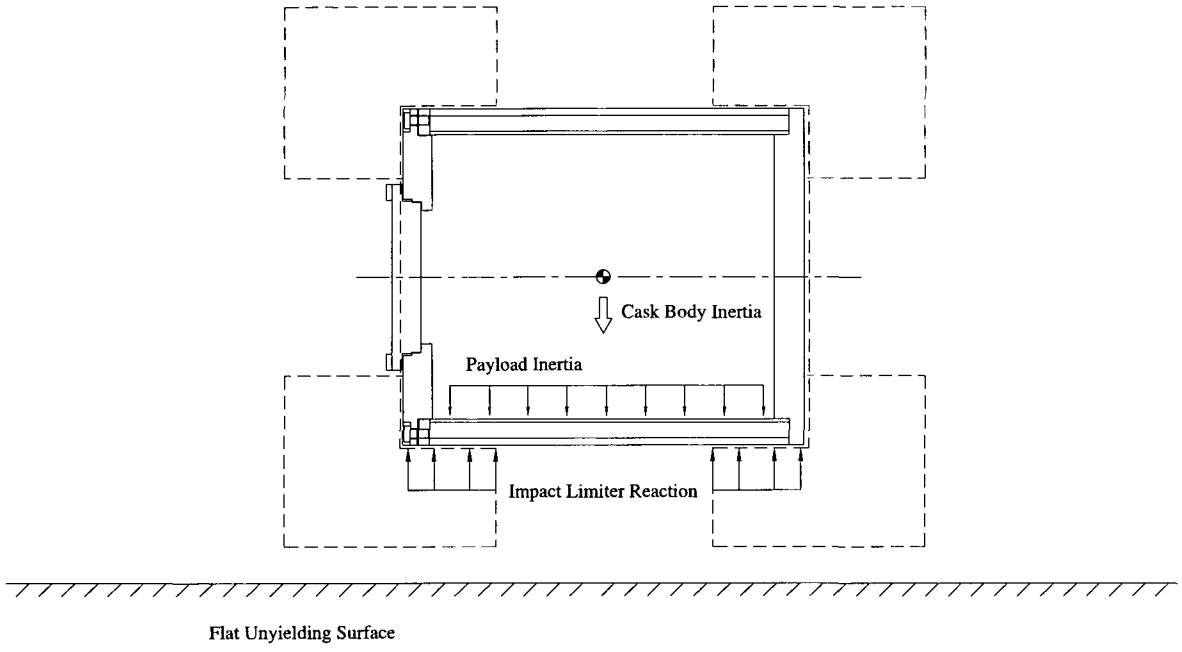

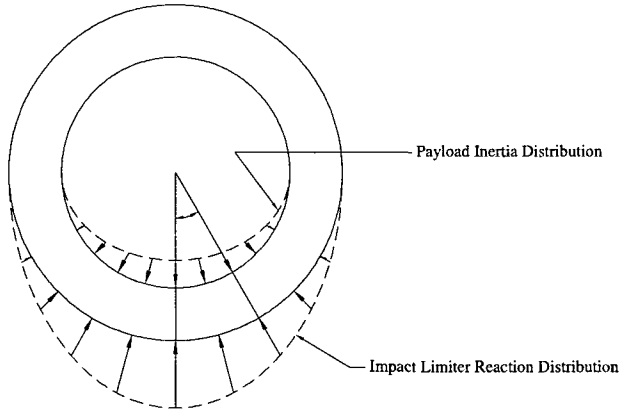

Figure 2-41
Load Distribution on the Model During Side Drop

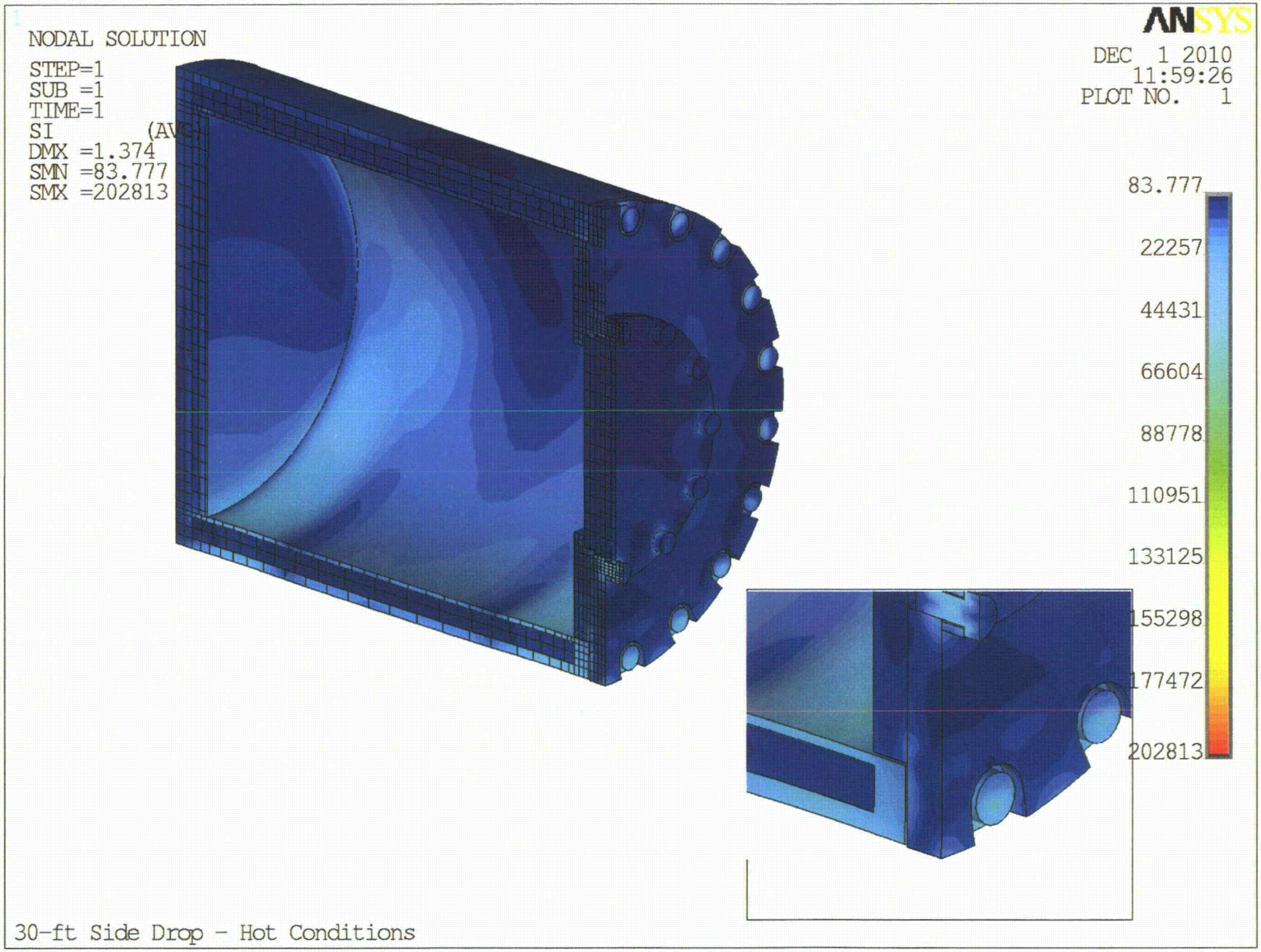

Figure 2-42
Stress Intensity Plot – 30-ft Side Drop – Hot Condition

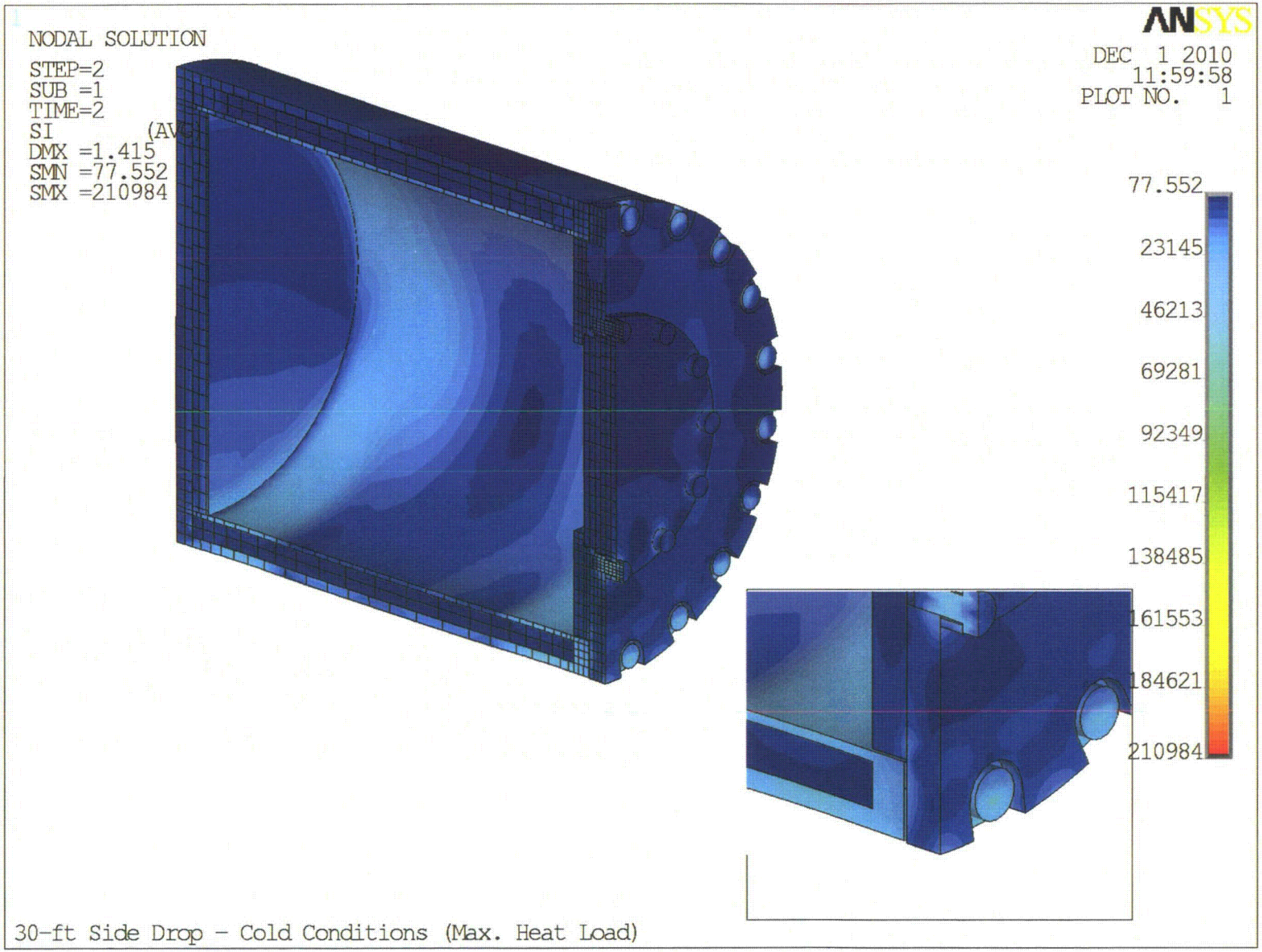

Figure 2-43
Stress Intensity Plot – 30-ft Side Drop – Cold Condition (Max. Heat Load)

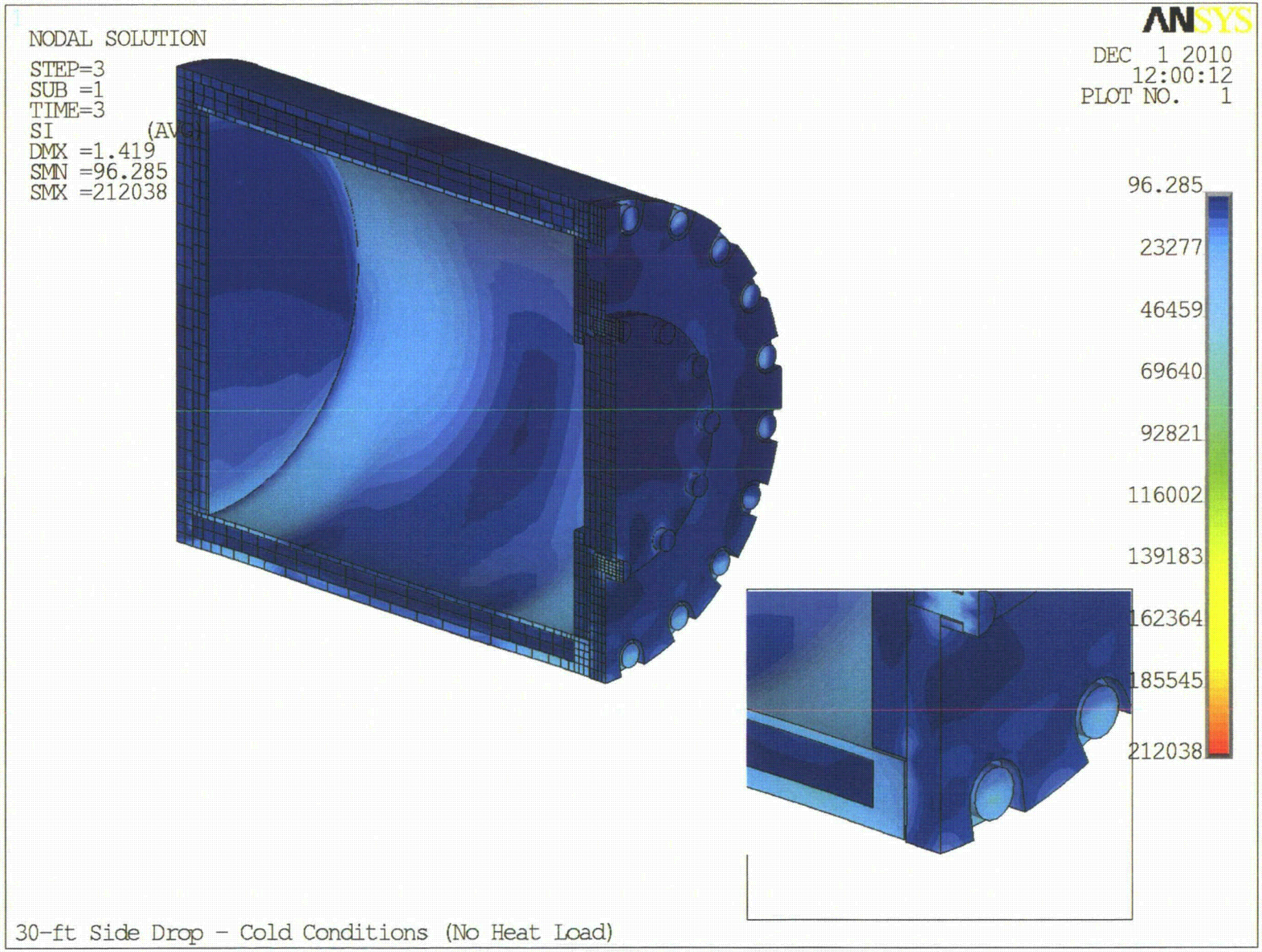

Figure 2-44
Stress Intensity Plot – 30-ft Side Drop – Cold Condition (No Heat Load)

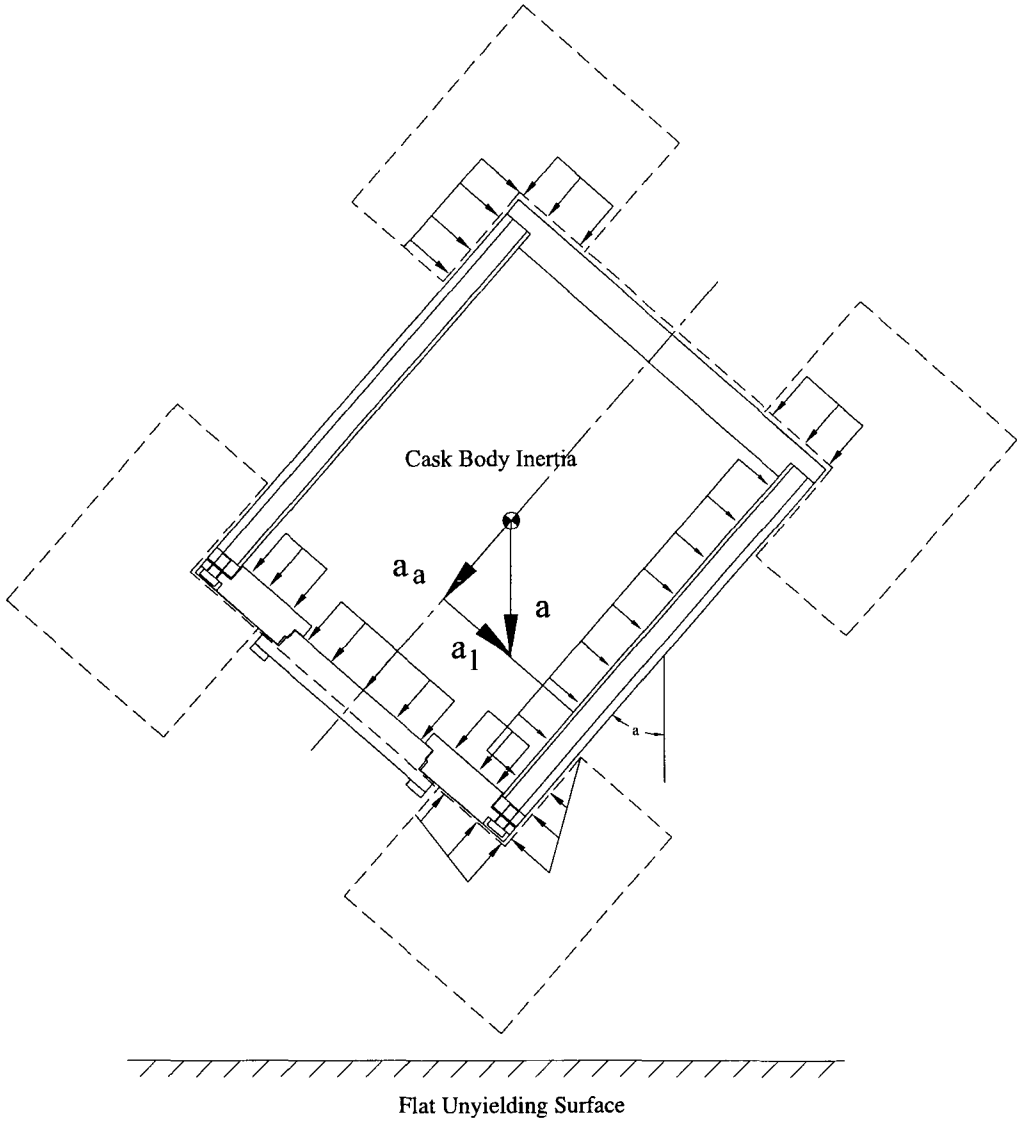

Figure 2-45
Load Distribution on the Model During Corner Drop

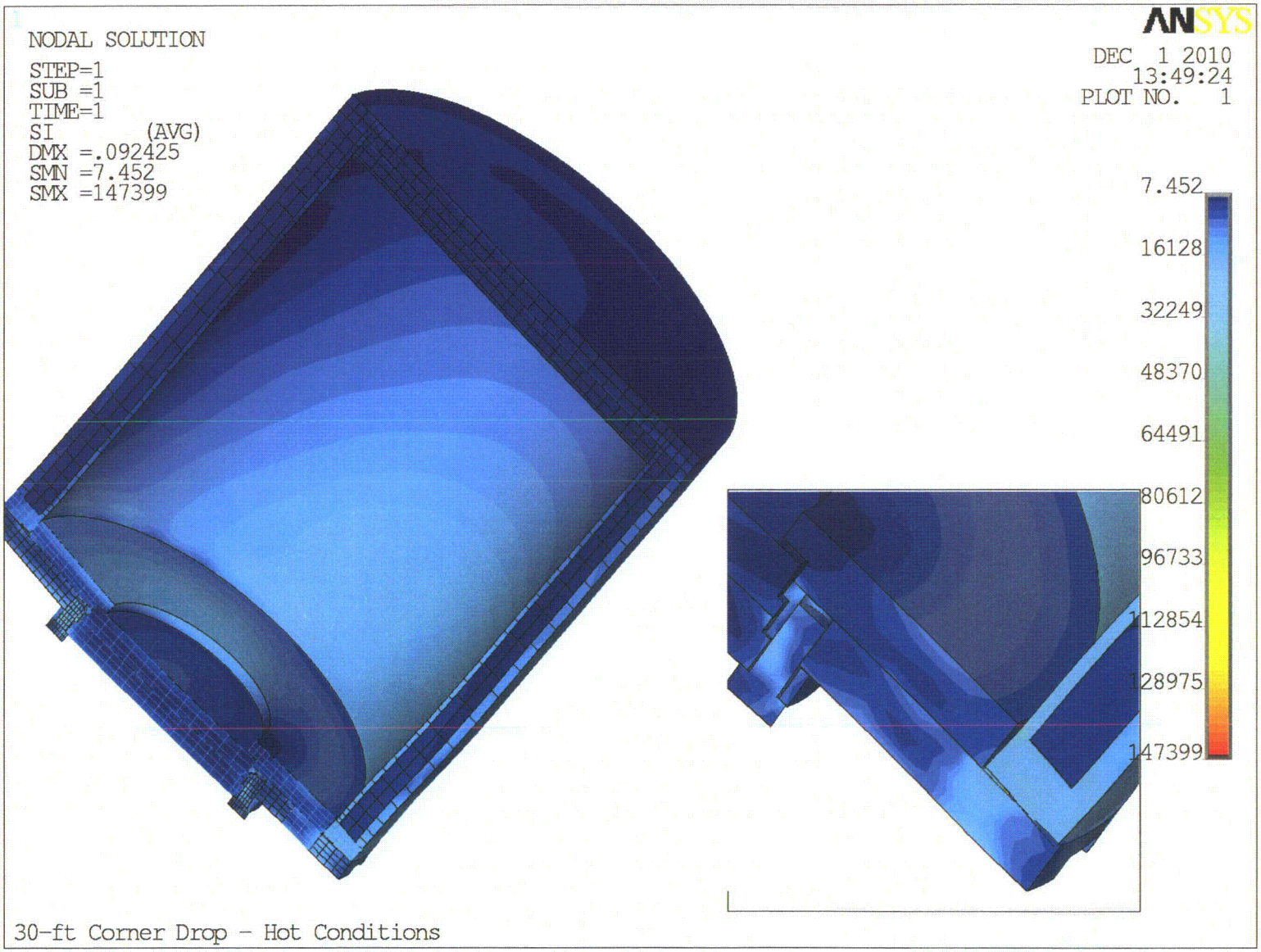

Figure 2-46
Stress Intensity Plot – 30-ft Corner Drop – Hot Condition

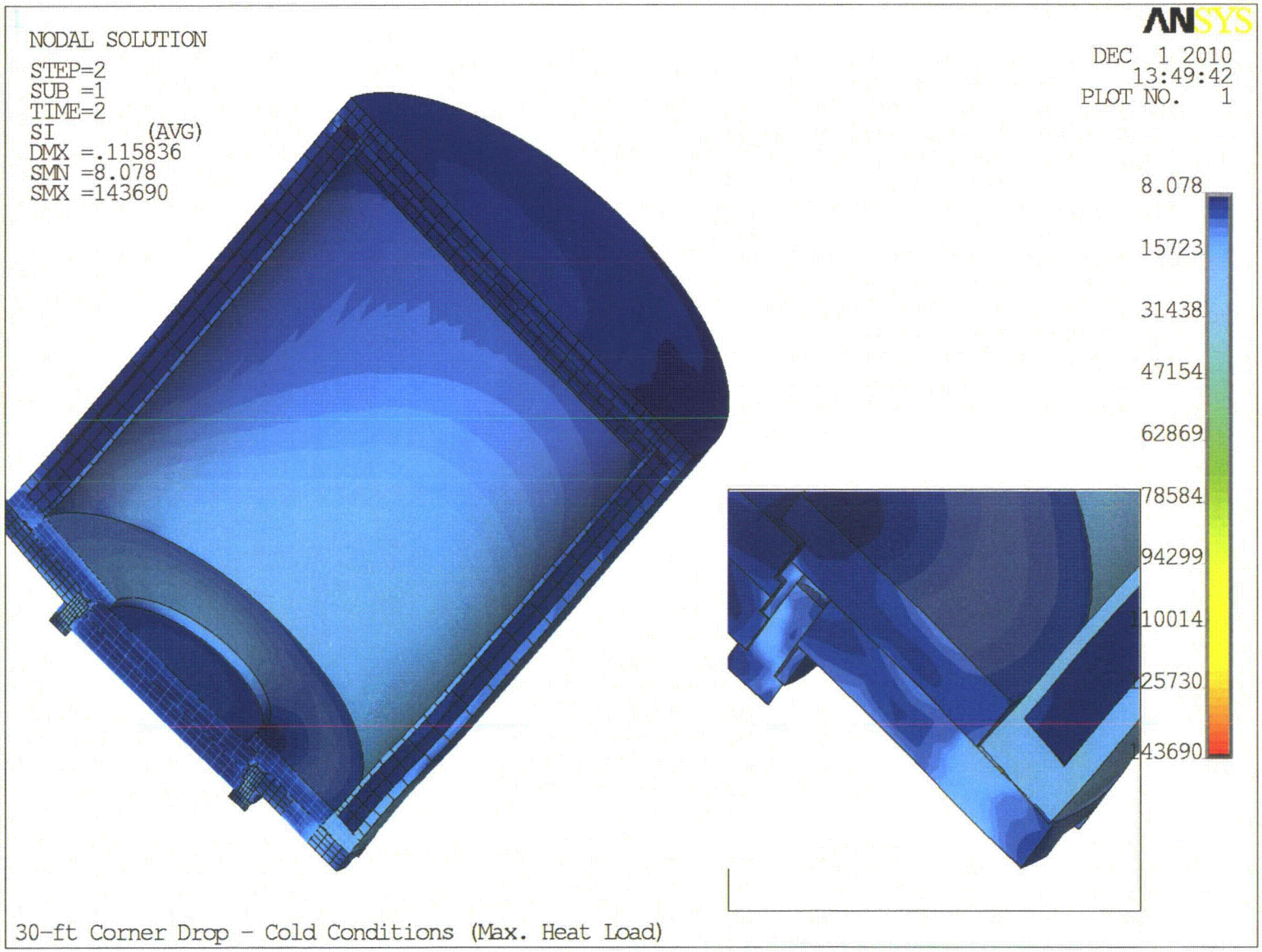

Figure 2-47
Stress Intensity Plot – 30-ft Corner Drop – Cold Condition (Max. Heat Load)

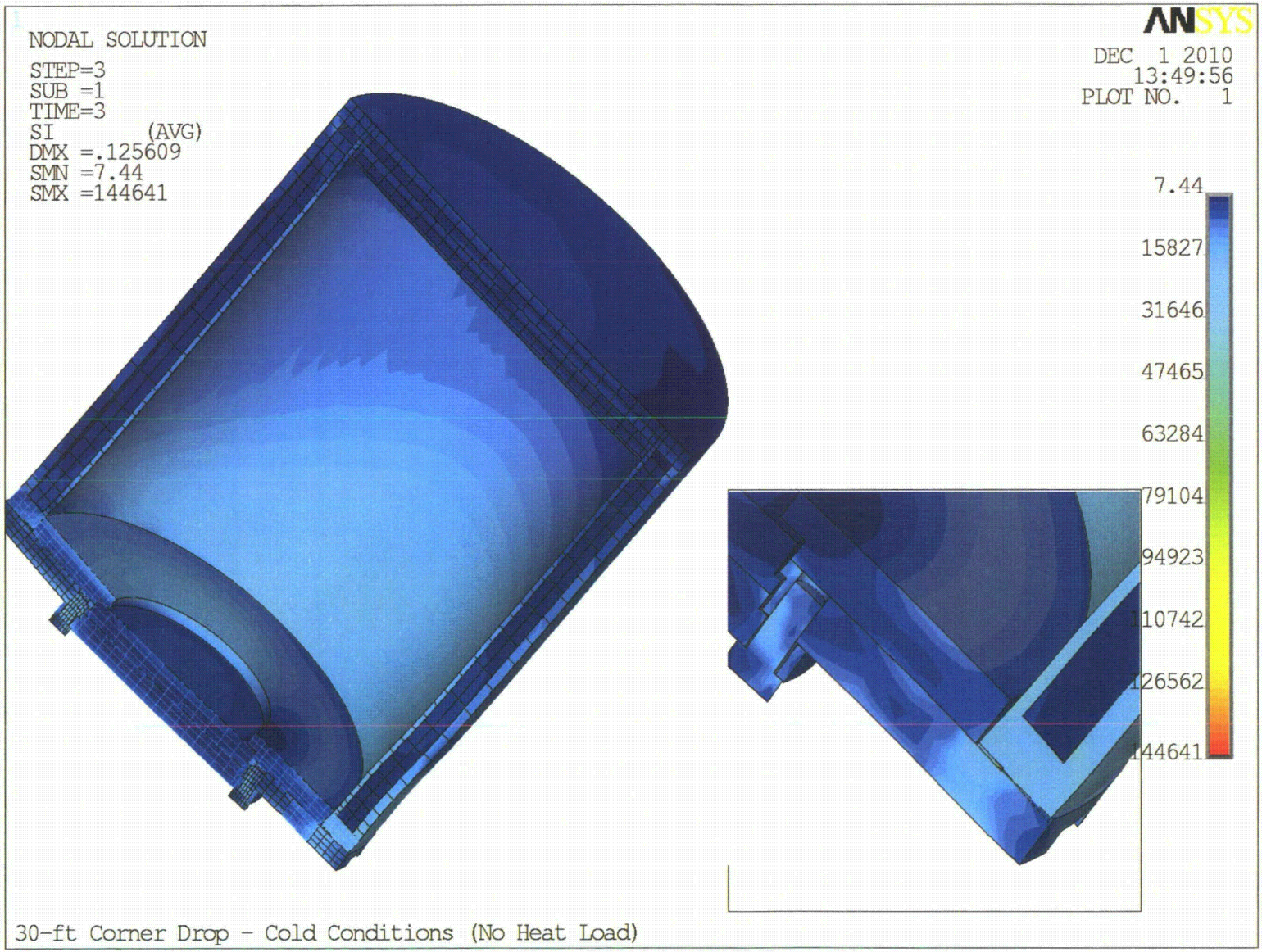

Figure 2-48
Stress Intensity Plot – 30-ft Corner Drop – Cold Condition (No Heat Load)

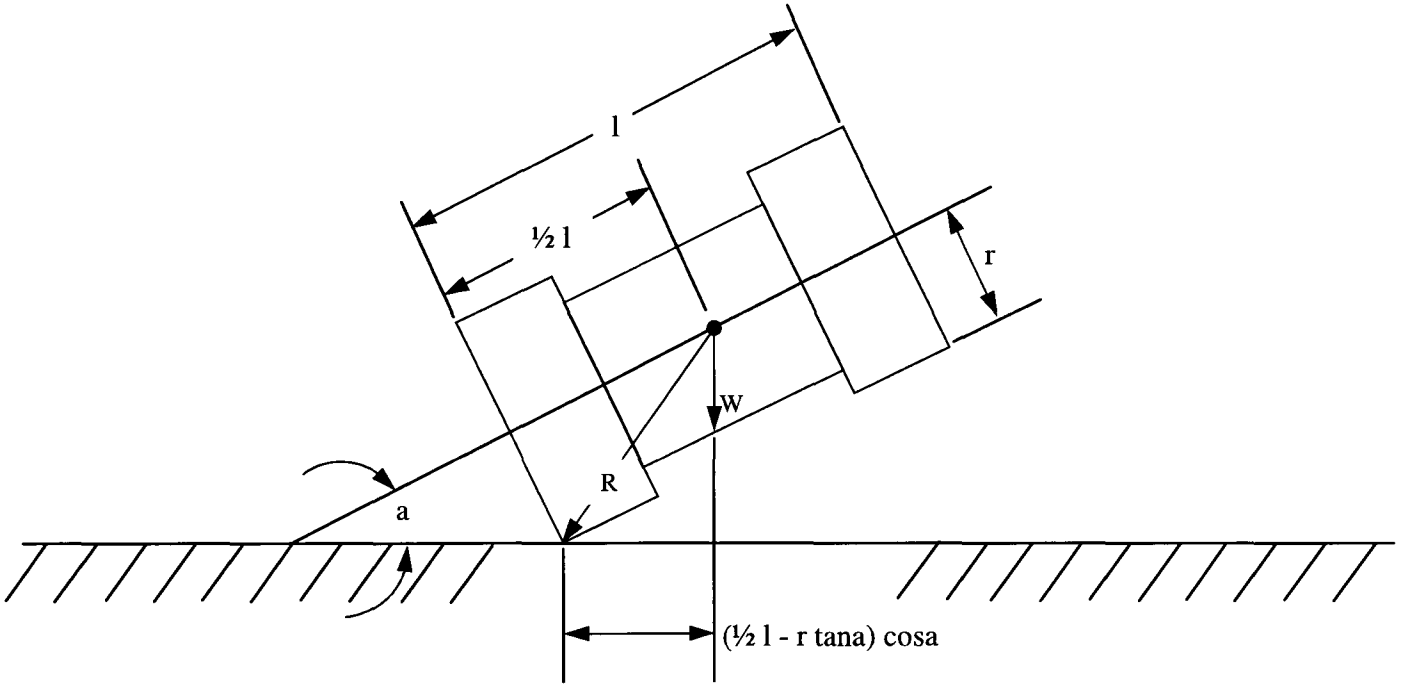

Figure 2-49
Cask Oriented for Oblique Drop

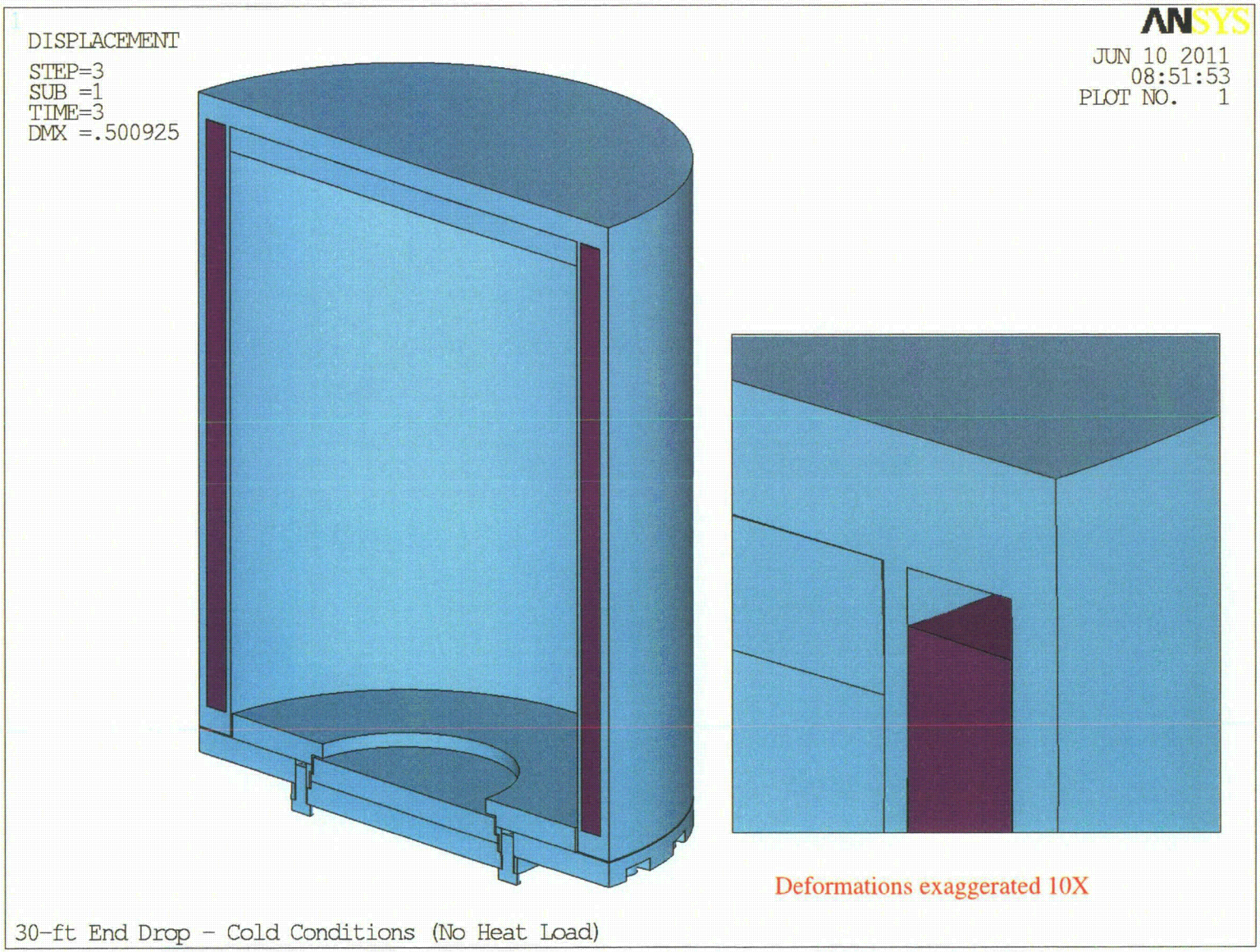

Figure 2-50
lead-Slump during the 30-ft End Drop Test

2-134

3.0 THERMAL EVALUATION

This Section identifies, describes, discusses, and analyzes the principal thermal engineering design of the 8-120B package. Compliance with the performance requirements of 10 CFR 71 (Reference 3-1) is demonstrated.

3.1 DESCRIPTION OF THERMAL DESIGN

Two components contribute to the thermal protection of the cask body. These components are the impact limiters which provide thermal protection to the ends of the cask and the fire shield which protects the side walls between the impact limiters.

3.1.1 Design Features

Figure 3-1 shows the design features of the components contributing to the thermal protection of the cask. These components are identified in the figure with solid red color.

The fire shield is made of 3/16" steel sheet metal. In order to provide an air gap between the cask outer shell and the fire shield, 5/32" diameter wires are helically wrapped around the cask outer shell. The fire shield is welded to the cask body at the two ends. Cut-outs are provided in the fire shield in order to wrap around the tie down lugs and lifting ear pads.

The impact limiters are sheet metal enclosures filled with polyurethane foam which acts as insulation barrier to heat flow. The impact limiters are attached together with the help of turnbuckles on the ends of the cask as shown in Figure 3-1. The impact limiters remain attached to the cask body during the HAC drop tests (See Section 2.7). Therefore they provide thermal insulation to the cask during the NCT events and the fire test.

3.1.2 Content's Decay Heat

The maximum decay heat of the waste component is 200 watt. The minimum decay heat of zero watt is used in the evaluation of other limiting case.

3.1.3 Summary Tables of Temperatures

The maximum temperatures in various important components of the cask during the NCT events are summarized in Table 3-1. Table 3-2 summarizes the maximum temperature in these components during the HAC fire test. The time at which these components achieve the maximum temperature is also identified in Table 3-2. The results summarized in Table 3-1 and 3-2 are discussed in detail in Sections 3.3 and 3.4.

3.1.4 Summary Table of Maximum Pressures

The summary of maximum pressures during the NCT and HAC fire test are provided in Table 3-3. The details of these pressure calculations are provided in Sections 3.3.2 and 3.4.3 for NCT and HAC fire test, respectively.

3.2 MATERIAL PROPERTIES AND COMPONENT SPECIFICATIONS

3.2.1 Material Properties

The material properties of the cask components used in the analysis of the 8-120B package are provided in Tables 3-4 through 3-6. Table 3-4 provides the temperature independent properties of the steel and lead components. Table 3-5 provides the temperature dependent specific heat and thermal conductivity of stainless steel, carbon steel and lead. Table 3-6 provides the temperature dependent density, specific heat and

conductivity of air. Material properties have been obtained from standard references (References 3-2 through 3-6) and are identified in Tables 3-4 through 3-6.

3.2.2 Component Specifications

The metallic components that are important for the thermal performance of the package are made of steel. The non-metallic components are specified as follows:

- The seals used in the package are specified to be elastomer, 60-75 Durometer, usable temperature range that meets or exceeds the range required to meet the Normal Conditions of Transport (minimum= -40°F, maximum= +180°F) and meets or exceeds the temperature required to meet the Hypothetical Accident Conditions (+235°F) as specified by ES-C-038 (see Appendix 1, Section 8).
- Lead is specified to be ASTM B-29 commercial grade. The melting temperature is 622°F.
- Polyurethane foam used in the impact limiters are specified by ES-M-175 (see Appendix 1, Section 8). All the pertinent thermal properties are included in this specification.

3.3 THERMAL EVALUATION FOR NORMAL CONDITIONS OF TRANSPORT

The thermal analyses of the 8-120B package under various loading conditions have been performed using finite element modeling techniques. ANSYS finite element analysis code (Reference 3-7) has been employed to perform the analyses. Two finite element models have been employed in performing the NCT thermal analyses. A three-dimensional solid model and a 2-dimensional axisymmetric model were used in the analyses. For the load cases in which the mechanical loading on the cask are non-uniform, a three dimensional finite element model was used. To obtain the temperature distribution in the cask where the bolt loadings have no effect on the results, a two-dimensional axisymmetric finite element model has been used.

The cask geometry is symmetrical about a vertical plane, so a one-half model of the cask is represented in the 3-dimensional model. The foam in the impact limiter has not been explicitly included in the finite element model. Instead it has been represented by fully-isolated boundary conditions. For the NCT conditions, only the exposed portions of the fire shield and cask body are used for the heat rejection to the ambient.

Figure 3-2 shows the three-dimensional finite element model used in various thermal load analyses. Figure 3-3 shows the material property modeling of various components of the cask.

The internal heat load has been modeled in the FEM in two different ways - implicitly (in 3-d model) and explicitly (in 2-d model). In the implicit model the heat load is applied as a uniform flux over the cavity of the cask. This results in a conservative cask body temperature. However, the cavity temperature predicted is not conservative. To get a conservative prediction of the cask cavity temperature, the internal contents of the cask is explicitly represented in the 2-d model. The cask body structural evaluation has been performed with the implicit model results and the cask cavity temperature needed for the calculation of internal pressure has been obtained from the explicit model.

The cask body structural evaluation has been performed in Section 2 with the temperature results obtained in this section.

The details of the analyses, including the assumptions, modeling details, boundary conditions, and input and output data are included in Energy*Solutions* document TH-027 (Reference 3-8).

3.3.1 Heat and Cold

The finite element model described in Section 3.3 is analyzed for the following loading conditions:

- Hot Environment – This load case is based on the requirements of 10 CFR 71.71 (c) (1). The loading includes a 100° F ambient temperature, solar insolation, and maximum internal heat load. This loading is used as one of the extreme initial conditions for the normal conditions of transport (NCT)

and hypothetical accident condition (HAC) test evaluation. The temperature distribution in the cask body under this loading condition is shown in Figure 3-4.

- Cold Environment – This load case is based on the requirements of 10 CFR 71.71 (c) (2). The loading includes a -40° F ambient temperature, no solar insolation, and maximum internal heat load. This loading is used as one of the extreme initial conditions for the normal conditions of transport (NCT) and hypothetical accident condition (HAC) test evaluation. The temperature distribution in the cask body under this loading condition is shown in Figure 3-5.
- Normal Hot - This load case is based on the requirements of 10 CFR 71.71 (b). The loading includes a 100° F ambient temperature, no solar insolation, and maximum internal heat load. The temperature distribution in the cask body under this loading condition is shown in Figure 3-6.
- Normal Cold - This load case is based on the requirements of 10 CFR 71.71 (b). The loading includes a -20° F ambient temperature, no solar insolation, and maximum internal heat load. The temperature distribution in the cask body under this loading condition is shown in Figure 3-7.

The 2-d axisymmetric model, with the explicit heat loading, has been analyzed for the hot environment conditions. The temperatures results from this model have been used to report the waste and cavity temperatures. Figure 3-8 shows the temperature distribution in the cask and its internal contents.

The temperature distributions in the 8-120B cask under various conditions analyzed in this section are used in the structural analyses presented in Section 2. Under the cold conditions with minimum (zero) heat loading the body temperature of the cask reaches the ambient temperature in steady state. Therefore, no thermal analyses for this case are needed. On the other hand, with any amount of heat load, there exist temperature gradients in various parts of the cask. To capture these two effects, the evaluation of the cask in Section 2 has been performed for the two cold conditions one with the maximum internal heat load and another with minimum (zero) heat load. These two load cases envelope the conditions of maximum and minimum temperature gradient through the cask body.

The thermal analysis shows that under the normal conditions of transport there is no reduction in packaging effectiveness. The heat transfer capability of the components is not reduced under NCT, nor are there changes in material properties that affect structural performance, containment, or shielding. It has also been demonstrated that the maximum temperature of the accessible portion of the package is 160.6°F which is less than 185°F, required by 10 CFR 71.43(g), for an exclusive use shipment.

3.3.2 Maximum Normal Operating Pressure

The maximum internal pressure of the cask is calculated assuming that the gas within the cask, a mixture of air, water vapor, oxygen, and hydrogen, behaves as an ideal gas. To determine the maximum internal pressure under normal conditions in the cask (MNOP) the temperature of the gas mixture within the cask was evaluated. The maximum temperature of the cask cavity under normal conditions is 197.87°F, (see Table 3-1). The gas mixture in the cavity is conservatively assumed to be 200°F.

The maximum pressure is the sum of three components:

1. The pressure due to the increased temperature of the gas in the cavity;
2. The pressure due to water in the cask (vapor pressure of water); and
3. The pressure due to generation of gas (hydrogen and oxygen) by radiolysis.

1. The cask on loading has an internal pressure equal to ambient, assumed to be 1 atm absolute (14.7 psia) at 70 °F (21.1 °C, 294.3 K) and defined as P_1 in the equation below. Per the ideal gas law, the increased partial pressure of the air initially sealed in the fixed volume of the cask at the ambient temperature as it is heated to 200 °F (93.3 °C, 366.5°K) is:

$$P_2 = P_1 \times \frac{T_2}{T_1} = (14.7\,psia) \times \frac{366.5\,K}{294.3\,K} = 18.31\,psia$$

2. Since the cask cavity is assumed to also contain water, the vapor pressure of water must be added to the pressure in the cavity. The vapor pressure contributed by water (P_{H2O}) in the cavity at 200°F (93.3 °C) is 11.52 psia (interpolated from the table Vapor Pressure of Water from 0 °C to 370 °C, page 6-15, from Reference 3-4, a copy of the table is attached as Attachment 3A). Adding the water vapor pressure at 200 °F to the partial pressure of the initially-sealed air at this temperature gives:

$$P_3 = P_2 + P_{H2O} = 18.31\,psia + 11.52\,psia = 29.83\,psia$$

3. Further, the cask atmosphere is assumed to contain five volume percent (5 vol%) hydrogen (H_2) gas due to radiolysis of the water. By stoichiometry of the water molecule (H_2O), the cask atmosphere will also contain 2.5 vol% oxygen (O_2) gas generated by radiolysis. Noting that partial pressures in an ideal gas mixture are additive and behave the same as ideal gas volume fractions or mole fractions, the partial pressure of hydrogen is described by the following equation:

$$P_{H2} = 0.05 \times (P_{air} + P_{H2O} + P_{H2} + P_{O2})$$

Combining P_{air} and P_{H2O} into P_3 per item 2 above, and noting that $P_{O2} = 0.5 \times P_{H2}$, gives:

$$P_{H2} = 0.05 \times (P_3 + 1.5P_{H2})$$

Solving this equation explicitly for P_{H2} gives:

$$P_{H2} = \frac{(0.05)P_3}{1-(0.05)(1.5)} = \frac{(0.05)(29.83\,psia)}{1-(0.05)(1.5)} = 1.61\,psia$$

Recalling the stoichiometric relationship between hydrogen and oxygen liberated by radiolysis of water, and again combining the pressures of the initially sealed air and water vapor as P_3, the total pressure in the cask at 200 °F is:

$$P_{Total} = P_3 + 1.5P_{H2} = 32.25\,psia$$

Therefore, the MNOP in gage pressure is calculated as:

$$\text{MNOP} = P_{Total} - P_1 = 32.25\text{ psia} - 14.7\text{ psia} = 17.6\text{ psig}$$

The MNOP value is conservatively set at 35.0 psig for use in the cask structural analysis under normal conditions of transport (NCT).

3.3.3 Thermal Stresses

The structural evaluation of the package under the normal conditions of transport loading is performed in Reference (3-11). All the stresses are within the design allowable values established for 8-120B package.

3.4 HYPOTHETICAL ACCIDENT THERMAL EVALUATION

The thermal analyses of the 8-120B package under HAC fire conditions have been performed using finite element model, described in Section 3.3. A nonlinear thermal transient analysis is performed to obtain the time-history of the temperature in package.

The temperature results from the thermal analyses have been used for performing the structural evaluation of the 8-120B Cask under HAC fire. The maximum temperature of the cavity during the entire transient has been used for calculating the cask pressure during the HAC fire.

The impact limiters of the 8-120B package have been shown to remain attached to the cask body during the free drop tests. The effect of these drop tests is a local crushing of the foam, and possible rupture of the impact limiter skin. The puncture drop on the impact limiters will crush the foam and may also rupture the skin in the vicinity of the impact location. The rupture of the impact limiter skin after the drop and puncture tests may expose the polyurethane foam material to the fire. However, the polyurethane fire retardant characteristics will mitigate the effect of the direct exposure to fire due to formation of intumescent char. The intumescent char has the ability to seal large voids which could be caused by the impact damage. The char also provides a secondary thermal barrier which breaks down very slowly at 2000 to 2200°F.

The 5-gallon bucket tests performed by General Plastics where the open face of the bucket is exposed to direct fire show the formation of the char that prevents the fire from extending into the underlying foam. These tests also indicate that for the 11¾" foam thickness in the test, the effect of 30-minute fire has a minimal effect on the end opposite the exposed end. These tests were performed for various density foams and it was shown that the effectiveness of the foam is enhanced with the increasing foam density. With 25 lb/ft^3 foam density and a minimum foam thickness of 11" in the 8-120B cask package, the effect of exposure of a small portion of foam due to rupture during the drop and puncture test will not have a significant effect on the impact limiter performance during the fire. Therefore, the same boundary conditions at the interface between the cask and the impact limiter as those under the NCT (total thermal insulation) have been used for the HAC fire test analyses.

The direct impact of the puncture bar on the sidewall of the cask will remove the air gap provided between the fire-shield and the cask body. The fire shield may come in contact with the cask body near the impact location. During the HAC fire test extra amount of heat will be input to the cask body locally near the impact point. Analyses have also been performed to evaluate the conditions in which the fire-shield is damaged during the puncture drop test. The fire is assumed to hit the area directly where the puncture bar damages the fire shield. It has been shown that under these conditions the cask experiences locally high temperatures but they are within the acceptable limit for the materials. See Reference 3-10 for the details of this analysis.

The details of the analyses, including the assumptions, modeling details, boundary conditions, and input and output data are included in EnergySolutions document TH-028 (Reference 3-10).

3.4.1 Initial Conditions

The initial temperature condition, used for the HAC fire test analysis is obtained by running the finite element model with the following boundary conditions:

- Internal heat load – 200 W
- Solar insolation - yes
- Heat Transfer to the ambient by radiation – yes
- Heat transfer to the ambient by natural convection – yes
- Ambient air temperature - 100°F

3.4.2 Fire Test Conditions

The fire transient is run with the body temperature resulting from the above initial conditions. The fire transient is run for 30 minutes (1,800 sec) with the following boundary conditions:

- Internal heat load – 200 W
- Solar insolation - no
- Heat Transfer to the ambient by radiation – yes
- Heat transfer to the ambient by forced convection – yes
- Ambient air temperature - 1475°F

The end of fire analysis of the model is performed with the body temperature resulting from the above fire transient to 1801 sec with the following boundary conditions:

- Internal heat load – 200 W
- Solar insolation - no
- Heat Transfer to the ambient by radiation – yes
- Heat transfer to the ambient by natural convection – yes
- Ambient air temperature - 100°F

The cool-down analysis of the model is performed with the body temperature resulting from the above fire transient to 22,500 sec with the following boundary conditions:

- Internal heat load – 200 W
- Solar insolation - yes
- Heat Transfer to the ambient by radiation – yes
- Heat transfer to the ambient by natural convection – yes
- Ambient air temperature - 100°F

Figure 3-9 shows the boundary conditions used during the fire transient analysis.

3.4.3 Maximum Temperatures and Pressure

From the analyses of the finite element model, a time-history data of the temperature in various components of the cask is obtained. The fire shield, outer shell, inner shell, lead, and seal were considered as the critical components of the cask. The temperatures at representative locations in these components are monitored during the entire fire and cool down transient analysis. The nodes that are monitored at these critical components are shown in Figure 3-10.

Figure 3-11 gives the plot of the time-history data at the representative nodes of the cask components. Figure 3-12 gives the same data in cask components that are not directly exposed to the fire. The maximum temperature of various components of the cask during the entire transient analysis is presented in Table 3-2. The temperature profile in the cask during the cool-down period is shown in Figure 3-13. The temperature profile of the cask cavity at the time when its internal contents attain the maximum temperature is shown in Figure 3-14. Figure 3-15 shows the temperature profile in the cask body with the damage to the fire shield caused during the puncture drop.

The maximum internal pressure of the cask is calculated assuming that the gas within the cask, a mixture of air, water vapor, oxygen, and hydrogen, behaves as an ideal gas.

To determine the maximum internal pressure under hypothetical accident conditions (HAC) the temperature of the gas mixture within the cask was evaluated. The temperature profile at the nodes located on the inside (cavity) of the cask is shown in Ref. 3-10, Figure 19. The maximum value of the temperature in the cavity is 320.5°F. The gas mixture temperature in the cavity is conservatively assumed to be 325°F. Assuming 27.3 psia (see Section 3.3.2) exists inside the cask at 180°F, the pressure in the cask at 325°F, P_2, may be calculated by the ideal gas relationship:

$$P_2 = \frac{T_2}{T_1} \cdot P_1 \text{, where T is in degrees absolute}$$

$$P_2 = 33.5 \text{ psia}$$

The vapor pressure contributed by water in the cavity at 325°F is 96.2 psia (interpolated from the table Vapor Pressure of Water from 0 to 370 °C , page 6-15, from Reference 3-4, a copy of the table is attached as Attachment 3A).

Therefore, the maximum pressure during the HAC fire,

$$P_{max} = 33.5 + 96.2 - 14.7 = 129.7 \text{ psig}$$

The value used for P_{max} is conservatively set at 155 psig.

3.4.4 Maximum Thermal Stresses

The structural evaluation of the package under the HAC fire test conditions is performed in Section 2.7.4 of this SAR. The maximum thermal stresses in the package with the corresponding allowable stresses are compared in Table 2-23. All the stresses are within the design limits established for the 8-120B package.

3.4.5 Accident Conditions for Fissile Packages for Air Transport

Not applicable.

3.5 APPENDIX

3.5.1 List of References

(3-1) Code of Federal Regulations, Title 10, Part 71, Packaging and Transportation of Radioactive Material.

(3-2) Heat Transfer, J.P. Holman, McGraw Hill Book Company, New York, Fifth Edition, 1981.

(3-3) Cask Designers Guide, L.B. Shappert, et. al, Oak Ridge National Laboratory, February 1970, ORNL-NSIC-68.

(3-4) CRC Handbook of Chemistry and Physics, Robert C. Weast and Melvin J. Astel, eds., CRC Press, Inc., Boca Raton, Florida, 62nd ed., 1981.

(3-5) ASME Boiler & Pressure Vessel Code, 2001, Section II, Part D, Materials, The American Society of Mechanical Engineers, New York, NY, 2001.

(3-6) Rohsenow and Hartnett, Handbook of Heat Transfer, McGraw Hill Publication, 1973.

(3-7) ANSYS, Release 12.1, ANSYS Inc., Canonsburg, PA, 2009

(3-8) Energy*Solutions* Document No. TH-027, Rev.0, Steady State Thermal Analyses of the 8-120B Cask Using a 3-D Finite Element Model.

(3-9) RH TRU Payload Appendices Rev. 0, June 2006 U.S. Department of Energy.

(3-10) Energy*Solutions* Document No. TH-028, Rev.0, Hypothetical Fire Accident Thermal Analyses of the 8-120B Cask.

(3-11) Energy*Solutions* Document No. ST-626, Rev.0, Structural Analyses of the 8-120B Cask Under Normal Conditions of Transport.

3.5.2 Attachment

Attachment 3A

Vapor Pressure of Water from 0° to 370° C

This table gives the vapor pressure of water at intervals of 1° C from the melting point to the critical point.

T/°C	P/kPa	T/°C	P/kPa	T/°C	P/kPa	T/°C	P/kPa
0	0.61129	55	15.752	110	143.24	165	700.29
1	0.65716	56	16.522	111	148.12	166	717.83
2	0.70605	57	17.324	112	153.13	167	735.70
3	0.75813	58	18.159	113	158.29	168	753.94
4	0.81359	59	19.028	114	163.58	169	772.52
5	0.87260	60	19.932	115	169.02	170	791.47
6	0.93537	61	20.873	116	174.61	171	810.78
7	1.0021	62	21.851	117	180.34	172	830.47
8	1.0730	63	22.868	118	186.23	173	850.53
9	1.1482	64	23.925	119	192.28	174	870.98
10	1.2281	65	25.022	120	198.48	175	891.80
11	1.3129	66	26.163	121	204.85	176	913.03
12	1.4027	67	27.347	122	211.38	177	934.64
13	1.4979	68	28.576	123	218.09	178	956.66
14	1.5988	69	29.852	124	224.96	179	979.09
15	1.7056	70	31.176	125	232.01	180	1001.9
16	1.8185	71	32.549	126	239.24	181	1025.2
17	1.9380	72	33.972	127	246.66	182	1048.9
18	2.0644	73	35.448	128	254.25	183	1073.0
19	2.1978	74	36.978	129	262.04	184	1097.5
20	2.3388	75	38.563	130	270.02	185	1122.5
21	2.4877	76	40.205	131	278.20	186	1147.9
22	2.6447	77	41.905	132	286.57	187	1173.8
23	2.8104	78	43.665	133	295.15	188	1200.1
24	2.9850	79	45.487	134	303.93	189	1226.9
25	3.1690	80	47.373	135	312.93	190	1254.2
26	3.3629	81	49.324	136	322.14	191	1281.9
27	3.5670	82	51.342	137	331.57	192	1310.1
28	3.7818	83	53.428	138	341.22	193	1338.8
29	4.0078	84	55.585	139	351.09	194	1368.0
30	4.2455	85	57.815	140	361.19	195	1397.6
31	4.4953	86	60.119	141	371.53	196	1427.8
32	4.7578	87	62.499	142	382.11	197	1458.5
33	5.0335	88	64.958	143	392.92	198	1489.7
34	5.3229	89	67.496	144	403.98	199	1521.4
35	5.6267	90	70.117	145	415.29	200	1553.6
36	5.9453	91	72.823	146	426.85	201	1586.4
37	6.2795	92	75.614	147	438.67	202	1619.7
38	6.6298	93	78.494	148	450.75	203	1653.6
39	6.9969	94	81.465	149	463.10	204	1688.0
40	7.3814	95	84.529	150	475.72	205	1722.9
41	7.7840	96	87.688	151	488.61	206	1758.4
42	8.2054	97	90.945	152	501.78	207	1794.5
43	8.6463	98	94.301	153	515.23	208	1831.1
44	9.1075	99	97.759	154	528.96	209	1868.4
45	9.5898	100	101.32	155	542.99	210	1906.2
46	10.094	101	104.99	156	557.32	211	1944.6
47	10.620	102	108.77	157	571.94	212	1983.6
48	11.171	103	112.66	158	586.87	213	2023.2
49	11.745	104	116.67	159	602.11	214	2063.4
50	12.344	105	120.79	160	617.66	215	2104.2
51	12.970	106	125.03	161	633.53	216	
52	13.623	107	129.39	162	649.73	217	
53	14.303	108	133.88	163	666.25	218	
54	15.012	109	138.50	164	683.10	219	

Table 3-1

Summary of Maximum NCT Temperatures

Component	Maximum Calculated Temp.		Maximum Allowable Temperature (°F)
	Location (Node Nos.)	Value (°F)	
Fire Shield	40,028	160.6	185(1)
Outer Shell	1,376	161.3	(2)
Inner Shell	10,521	161.5	(2)
Lead	14,411	161.4	622(3)
Baseplate	2,430	162.3	(2)
Primary Lid	37,675	162.2	(2)
Secondary Lid	27,023	162.6	(2)
Primary Seal	25,430	161.6	180(5)
Secondary Seal	37,678	162.2	180(5)
Vent Seal	34,802	161.8	180(5)
Impact Limiter	27,594	161.9	(2)
Cask Cavity	2,029	197.87	(4)
Waste Container	2,041	197.92	(2)

NOTES:

(1) Based on the requirements of 10CFR71.43(g)
(2) Set by stress conditions.
(3) Melting point of lead.
(4) Used for establishing the cask maximum normal operating pressure (MNOP).
(5) Established based in 110% of the maximum calculated temperature.

Table 3-2

Summary of Maximum Hypothetical Fire Temperatures

Component	Maximum Calculated Temp.			Maximum Allowable Temperature (°F)
	Location (Node Nos.)	Time (Sec.)	Value (°F)	
Fire Shield	42,910	1,800	1,392	N.A
Outer Shell	12,531	1,800.3	464.4	800
Inner Shell	8,015	4,461.7	295.5	800
Lead	14,338	4,461.7	295.8	622(1)
Baseplate	2,430	936.48	206.3	800
Primary Lid	37,675	612.66	202.9	800
Secondary Lid	27,023	1,566.13	192.6	800
Primary Lid Seals	25,430	18,225	212.4	235(2)
Secondary Lid Seals	37,678	24,000	202.9	235(2)
Vent Seal	34,802	24,000	206.9	235(2)
Impact Limiter	27,594	24,000	205.1	500(4)
Cask Cavity	(3)	1,800	320.5	(5)
Waste Contents	2,013	40,289	239.7	(6)

NOTES:

(1) Lead melting point temperature.

(2) Established based in 110% of the maximum calculated temperature.

(3) Obtained from the temperature contour plot. See Figure 19.

(4) Temperature at which the foam material shows 0% thermal decomposition. Obtained from the General Plastics' sales brochure.

(5) Temperature used for calculating the cavity pressure.

(6) Waste contents temperature is obtained for reference purpose.

Table 3-3

Summary of Maximum Pressures during NCT and HAC Fire Test

Condition	Maximum Pressure (psig)	Reference
NCT	35.0	Section 3.3.2
HAC Fire Test	155	Section 3.4.3

Table 3-4

Temperature-Independent Metal Thermal Properties

Material	Property	Reference: Page	Value
Steel	Density	4: 536	0.2824 lb/in^3
	ε (Outside)	2: 648	0.8
	ε (Inside)	5:133	0.15
Lead	Density	4: 535	0.4109 lb/in^3
	Spec. Heat	4: 535	0.0311 Btu/lb-°F
	Melting Point	6: B-29	621.5 °F

Table 3-5

Temperature-Dependent Metal Thermal Properties

Temp. (°F)	**Stainless Steel** (Ref. 7)		**Carbon Steel** (Ref.7)		**Lead** (Ref.8)
	Sp. Heat Btu/lb-°F	**Conductivity** $\times 10^{-3}$ Btu/sec-in-°F	**Sp. Heat** Btu/lb-°F	**Conductivity** $\times 10^{-3}$ Btu/sec-in-°F	**Conductivity** $\times 10^{-3}$ Btu/sec-in-°F
70	0.117	0.199	0.104	0.813	0.465
100	0.117	0.201	0.106	0.803	0.461
150	0.120	0.208	0.109	0.789	0.455
200	0.122	0.215	0.113	0.778	0.448
250	0.125	0.222	0.115	0.762	0.441
300	0.126	0.227	0.118	0.748	0.435
350	0.128	0.234	0.122	0.731	0.428
400	0.129	0.241	0.124	0.715	0.422
450	0.130	0.245	0.126	0.701	0.415
500	0.131	0.252	0.128	0.683	0.409
550	0.132	0.257	0.131	0.667	0.402
600	0.133	0.262	0.133	0.648	0.395
650	0.134	0.269	0.135	0.632	0.389
700	0.135	0.273	0.139	0.616	0.389
750	0.136	0.278	0.142	0.600	0.389
800	0.136	0.282	0.146	0.583	0.389
900	0.138	0.294	0.154	0.551	0.389
1,000	0.139	0.306	0.163	0.519	0.389
1,100	0.141	0.315	0.172	0.484	0.389
1,200	0.141	0.324	0.184	0.451	0.389
1,300	0.143	0.336	0.205	0.417	0.389
1,400	0.144	0.345	0.411	0.380	0.389
1,500	0.145	0.354	0.199	0.363	0.389

Table 3-6

Temperature-Dependent Air Thermal Properties

Temp. (°F)	Air (Ref.4)		
	Density $\times 10^{-5}$ lb/in^3	**Sp. Heat** Btu/lb-°F	**Conductivity** $\times 10^{-7}$ Btu/sec-in-°F
70	4.3507	0.2402	3.4491
100	4.1117	0.2404	3.5787
150	3.7517	0.2408	3.9028
200	3.4676	0.2414	4.1759
250	3.2361	0.2421	4.4468
300	3.0307	0.2429	4.7037
350	2.8310	0.2438	4.9560
400	2.6730	0.2450	5.2037
450	2.5220	0.2461	5.4491
500	2.3964	0.2474	5.6875
550	2.2778	0.2490	5.9213
600	2.1684	0.2511	6.1435
650	2.0706	0.2527	6.3634
700	1.9803	0.2538	6.5810
750	1.8981	0.2552	6.7894
800	1.8177	0.2568	6.9954
900	1.6898	0.2596	7.4097
1,000	1.5712	0.2628	7.8032
1,100	1.4722	0.2659	8.1759
1,200	1.3848	0.2689	8.5440
1,300	1.3044	0.2717	8.8981
1,400	1.2350	0.2742	9.2847
1,500	1.1707	0.2766	9.7060

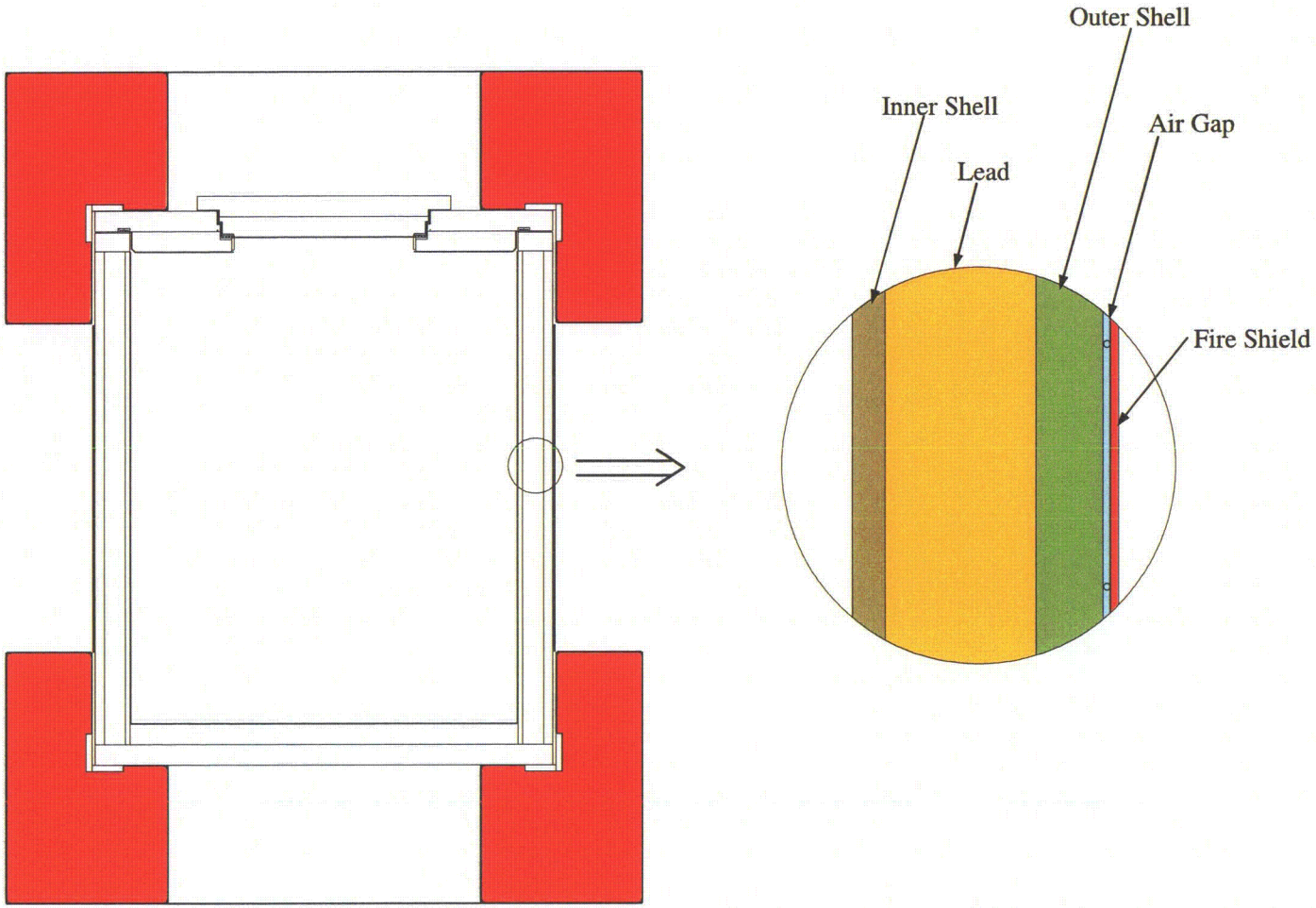

Figure 3-1
8-120B Cask Design Features Important to Thermal Performance

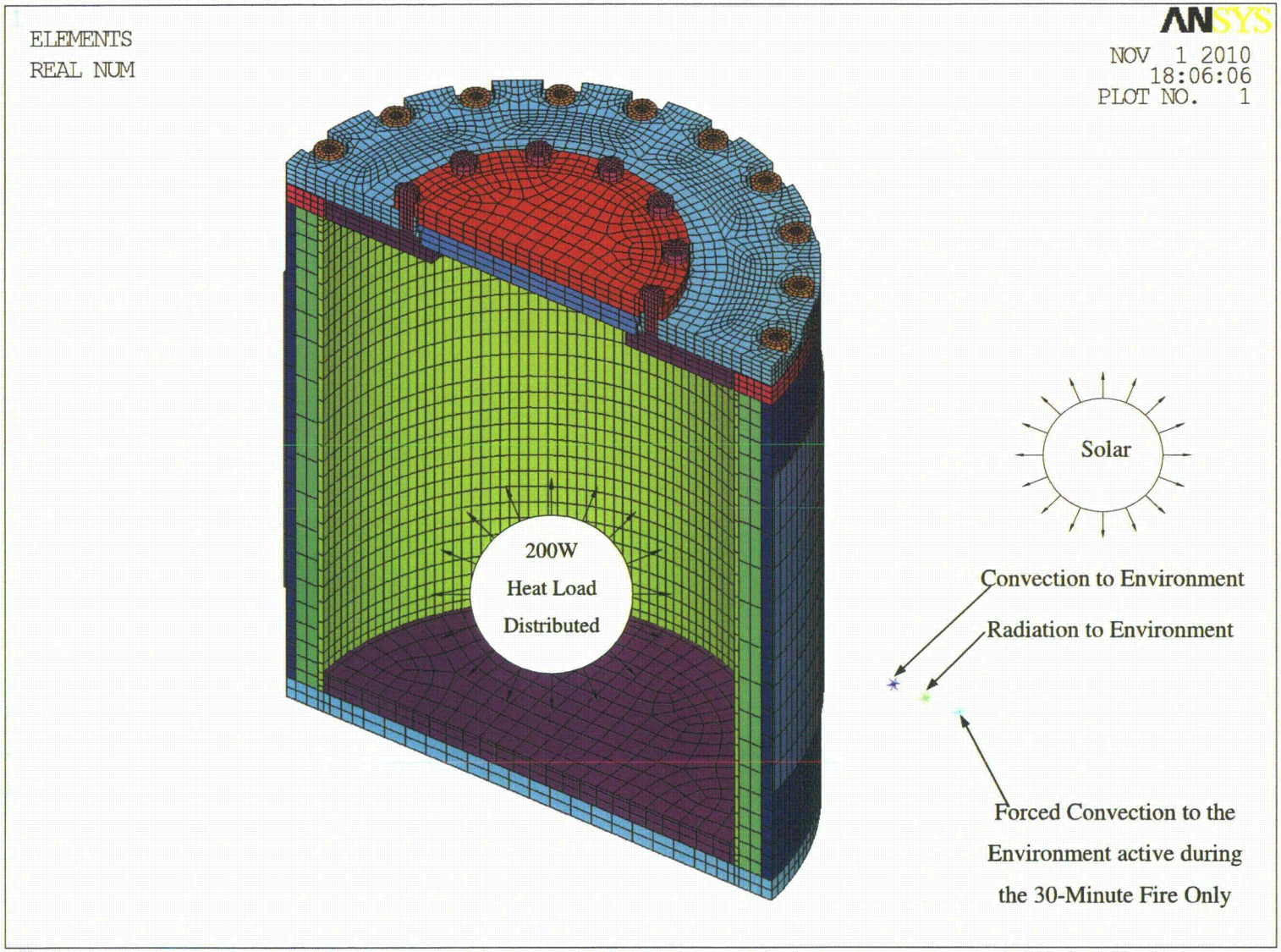

Figure 3-2
Finite Element Model of the 8-120B Cask Used for the Thermal Analyses

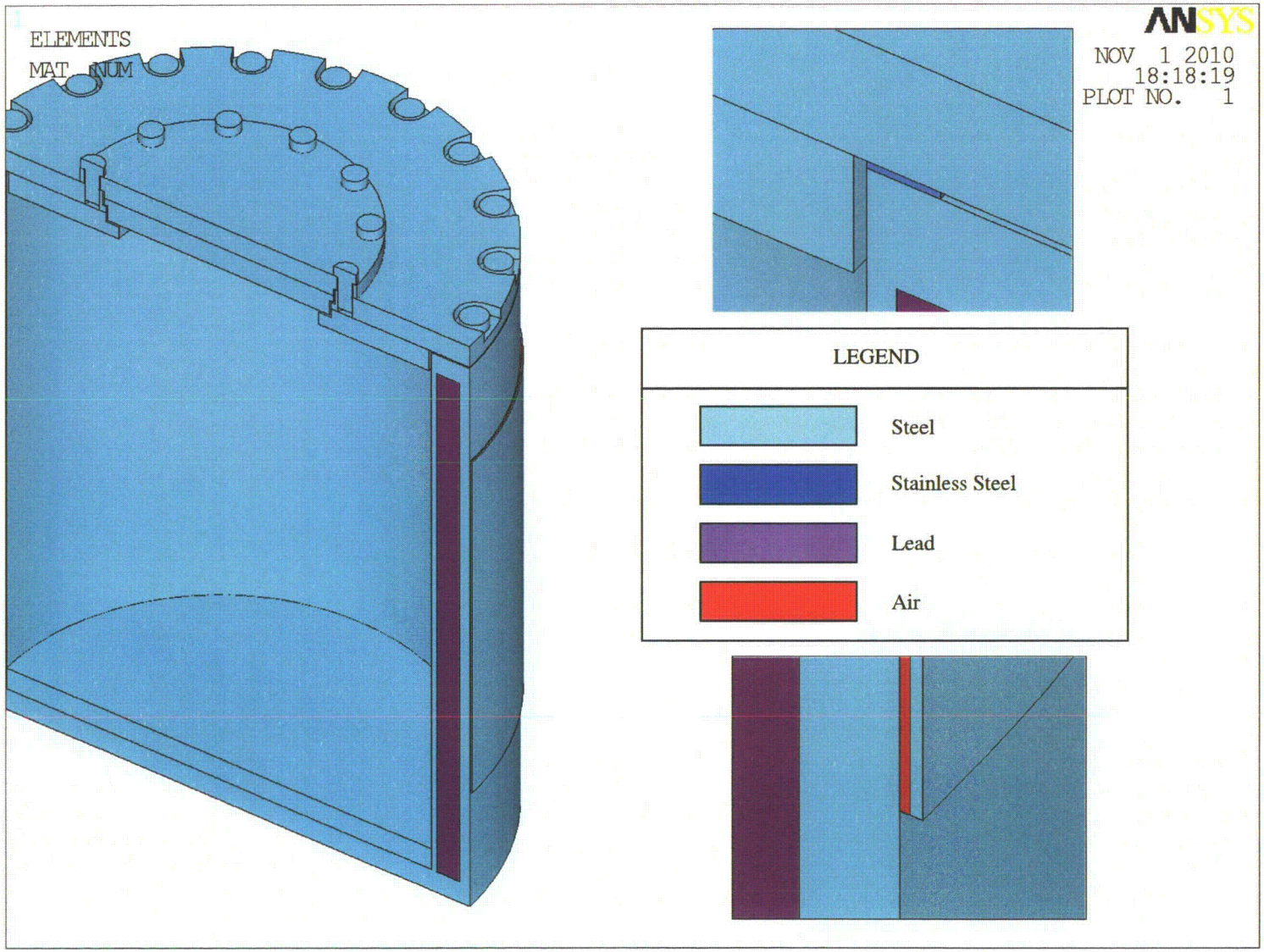

Figure 3-3
Materials Used in the Finite Element Model

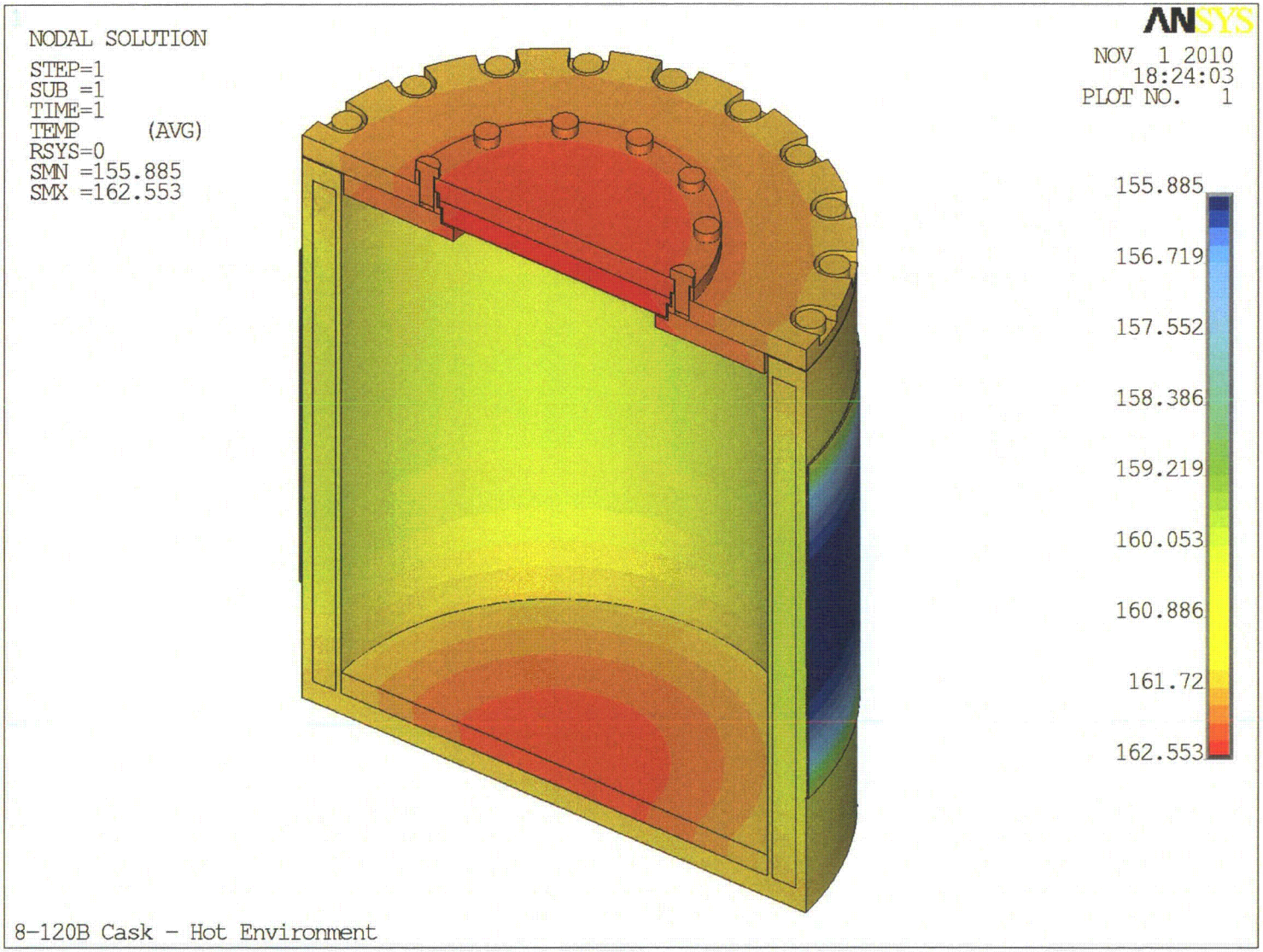

Figure 3-4
Temperature Distribution – Hot Environment

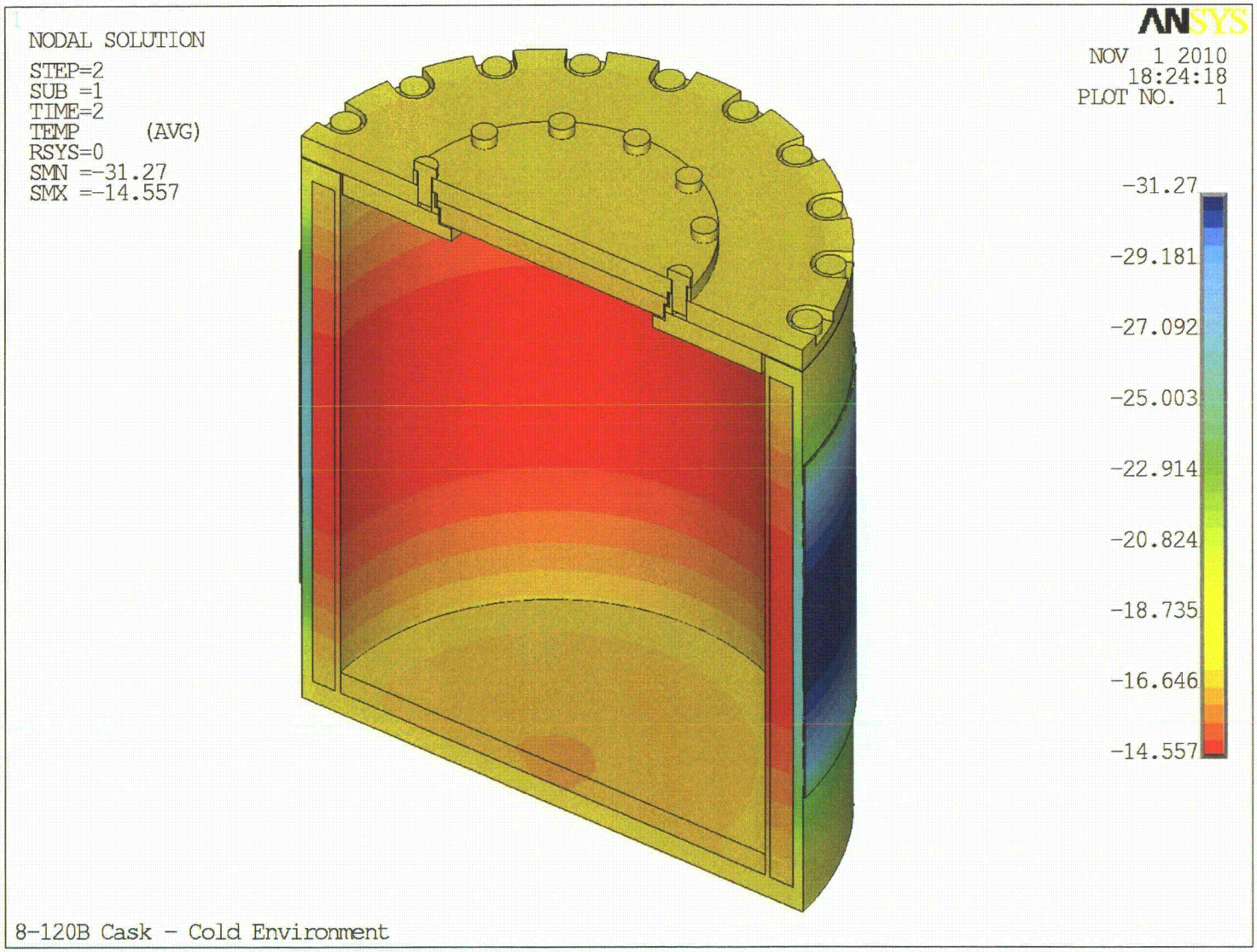

Figure 3-5
Temperature Distribution – Cold Environment

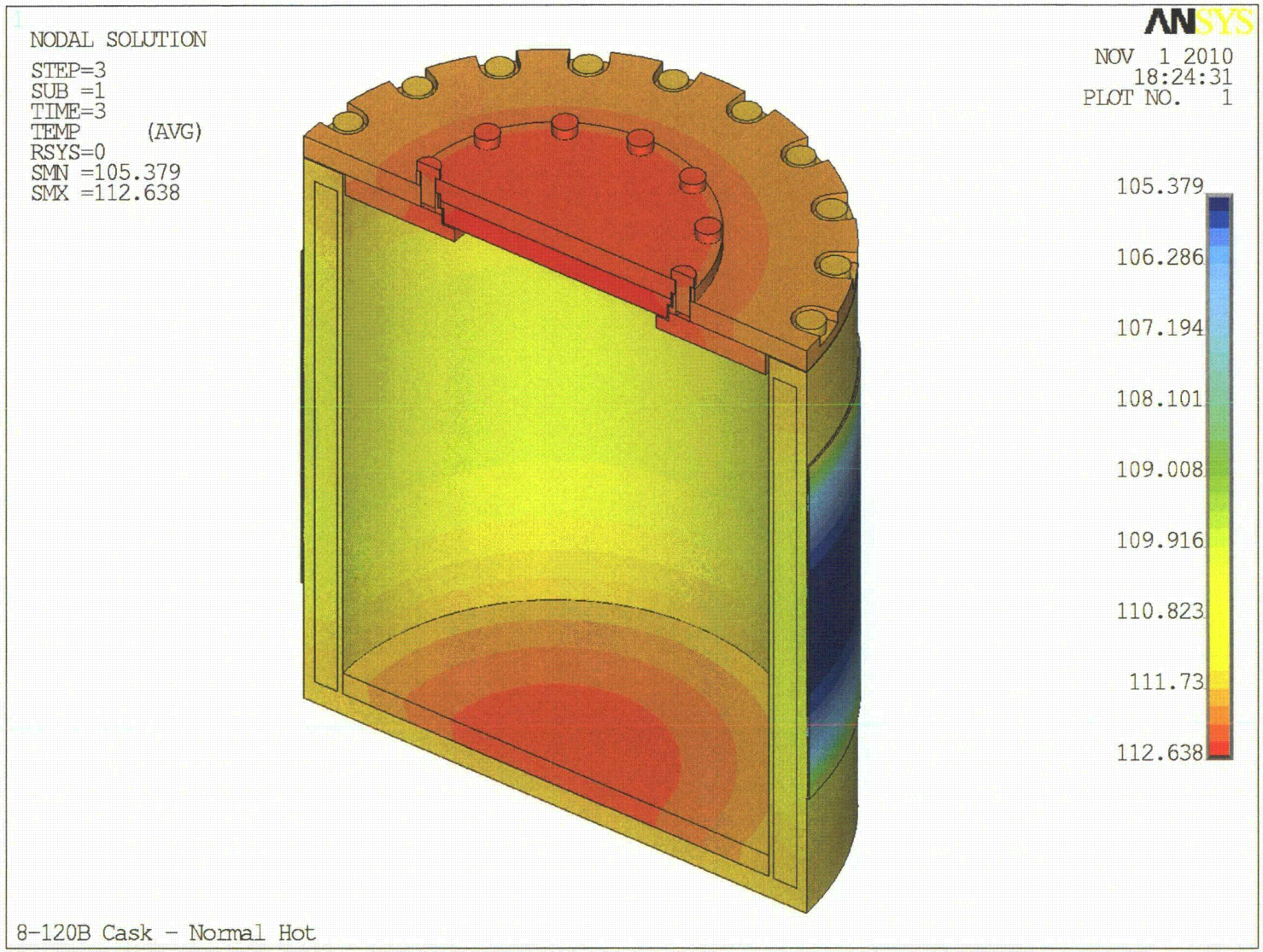

Figure 3-6
Temperature Distribution – Normal Hot

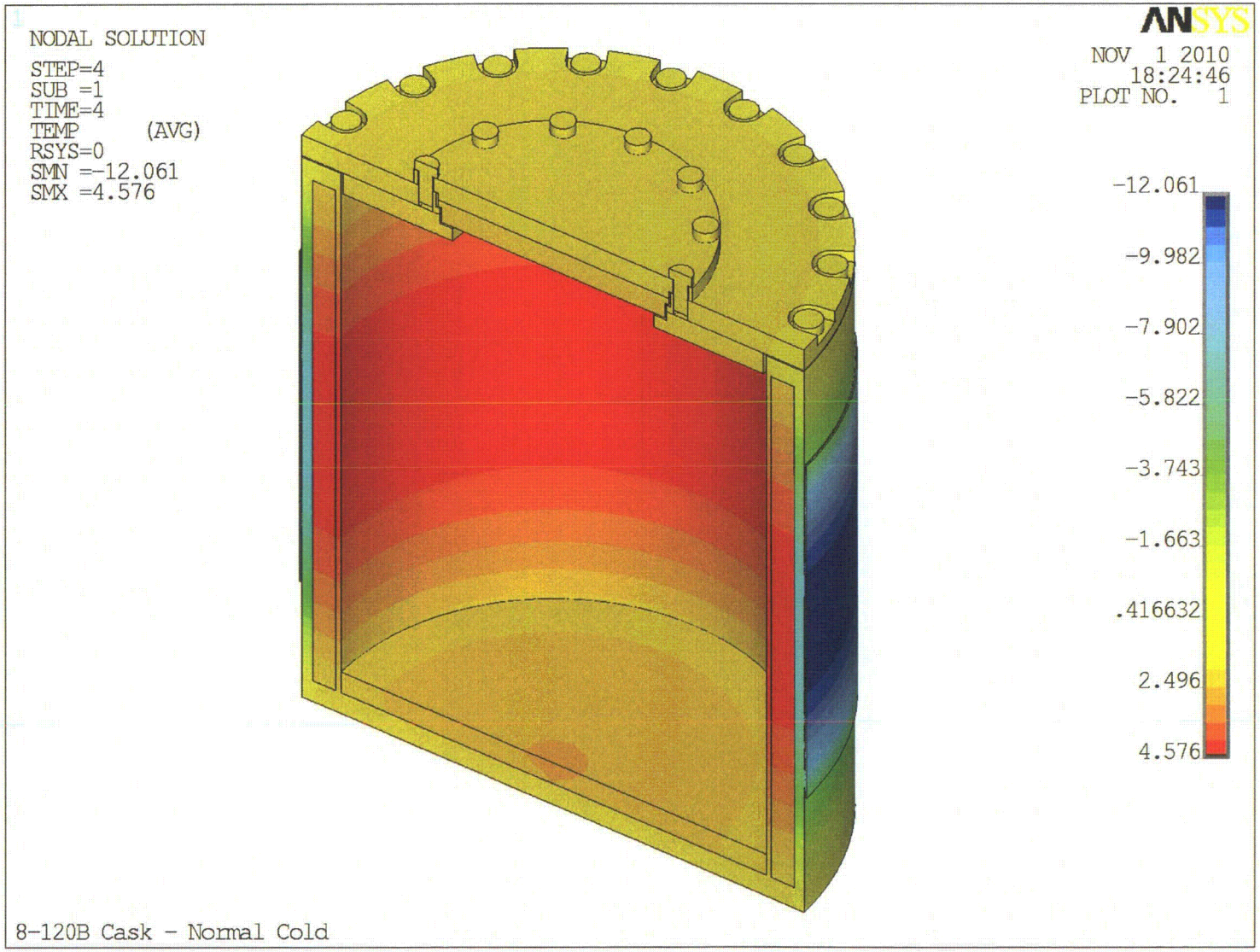

Figure 3-7
Temperature Distribution – Normal Cold

Figure 3-8
Temperature Distribution in the Cask Cavity– Hot Environment

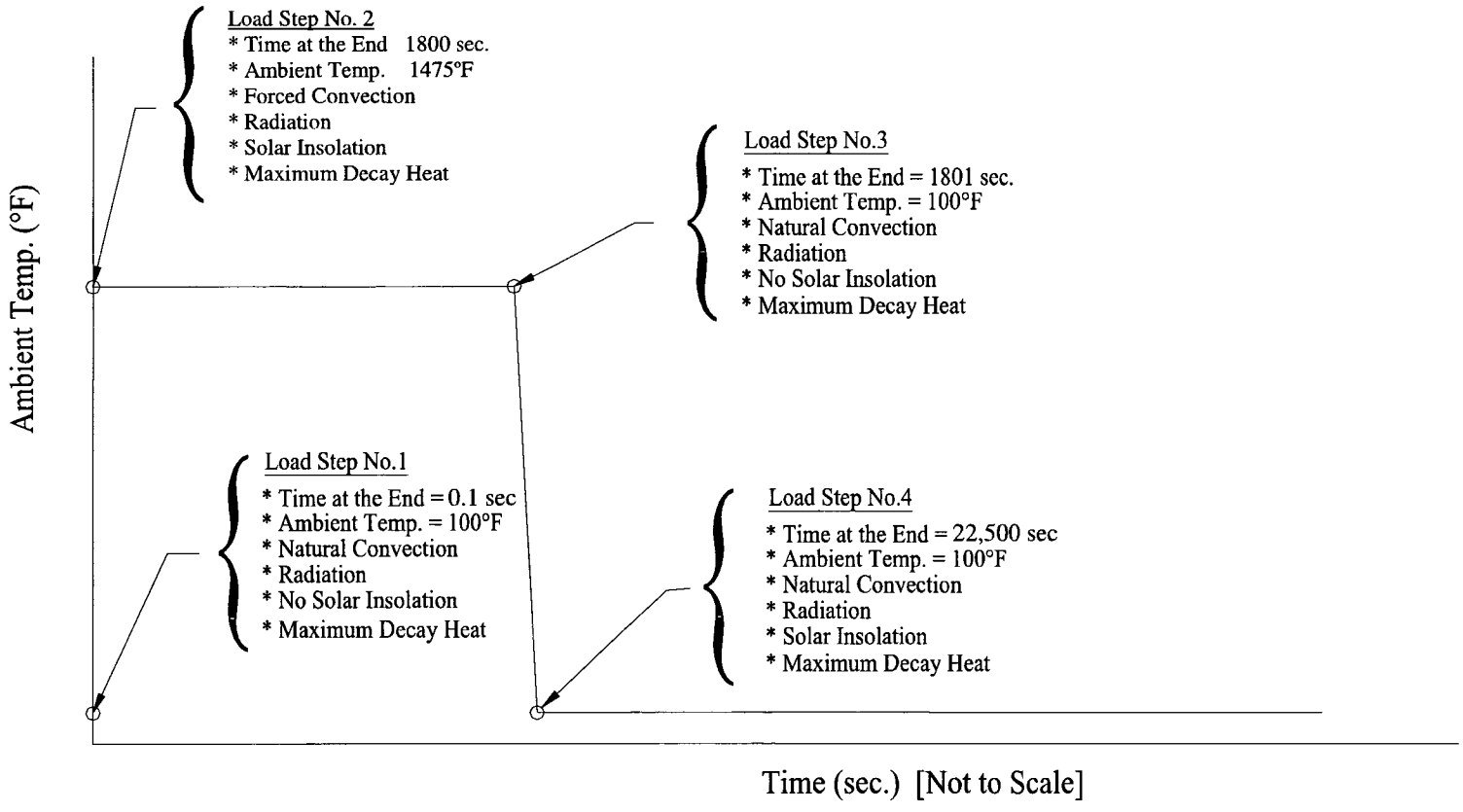

Figure 3-9
HAC Fire Analysis Load Steps and Boundary Conditions

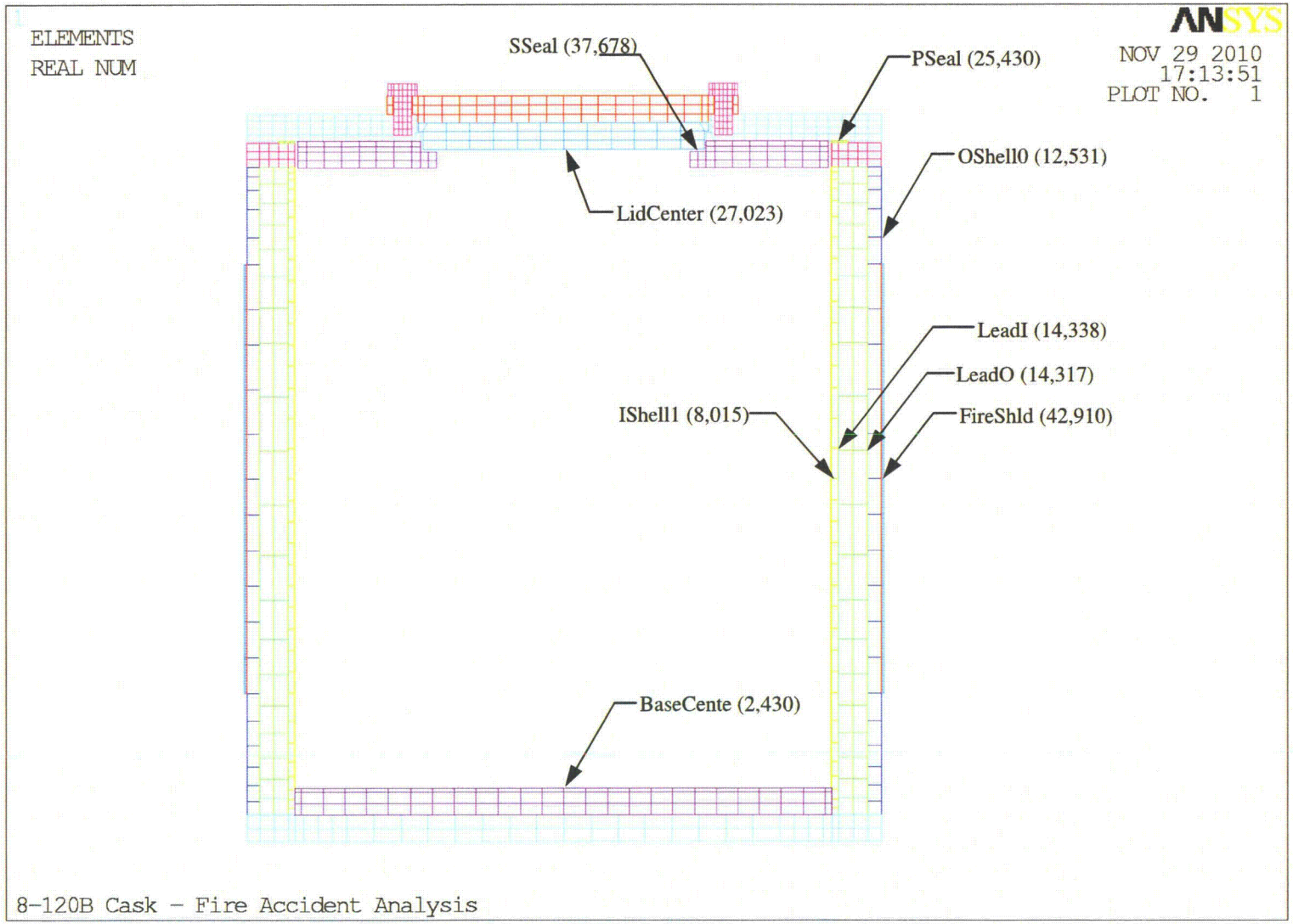

Figure 3-10
Identification of the Nodes where Time-History is Monitored

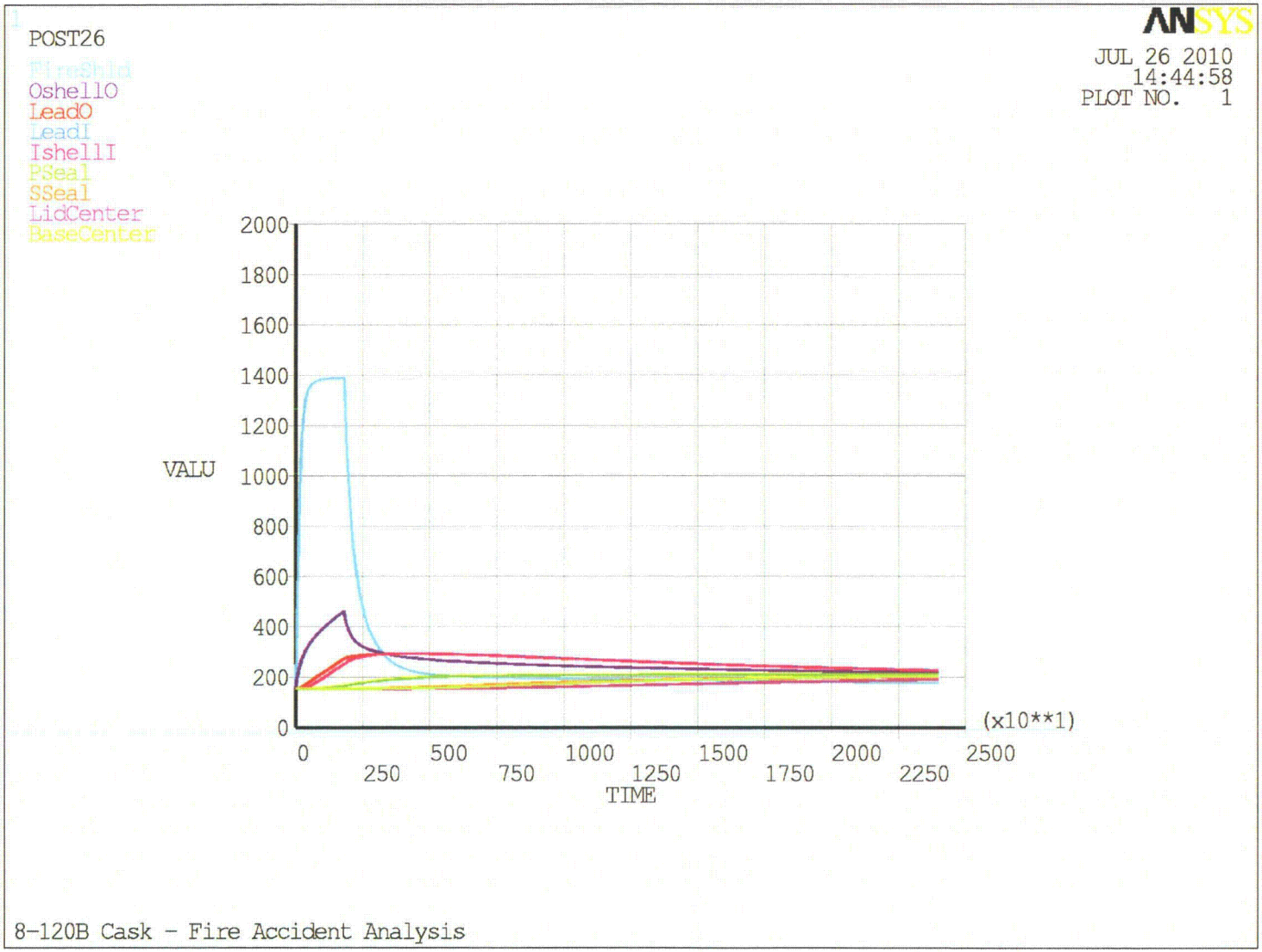

Figure 3-11
Temperature Time-History Plot in Various Components of the Cask

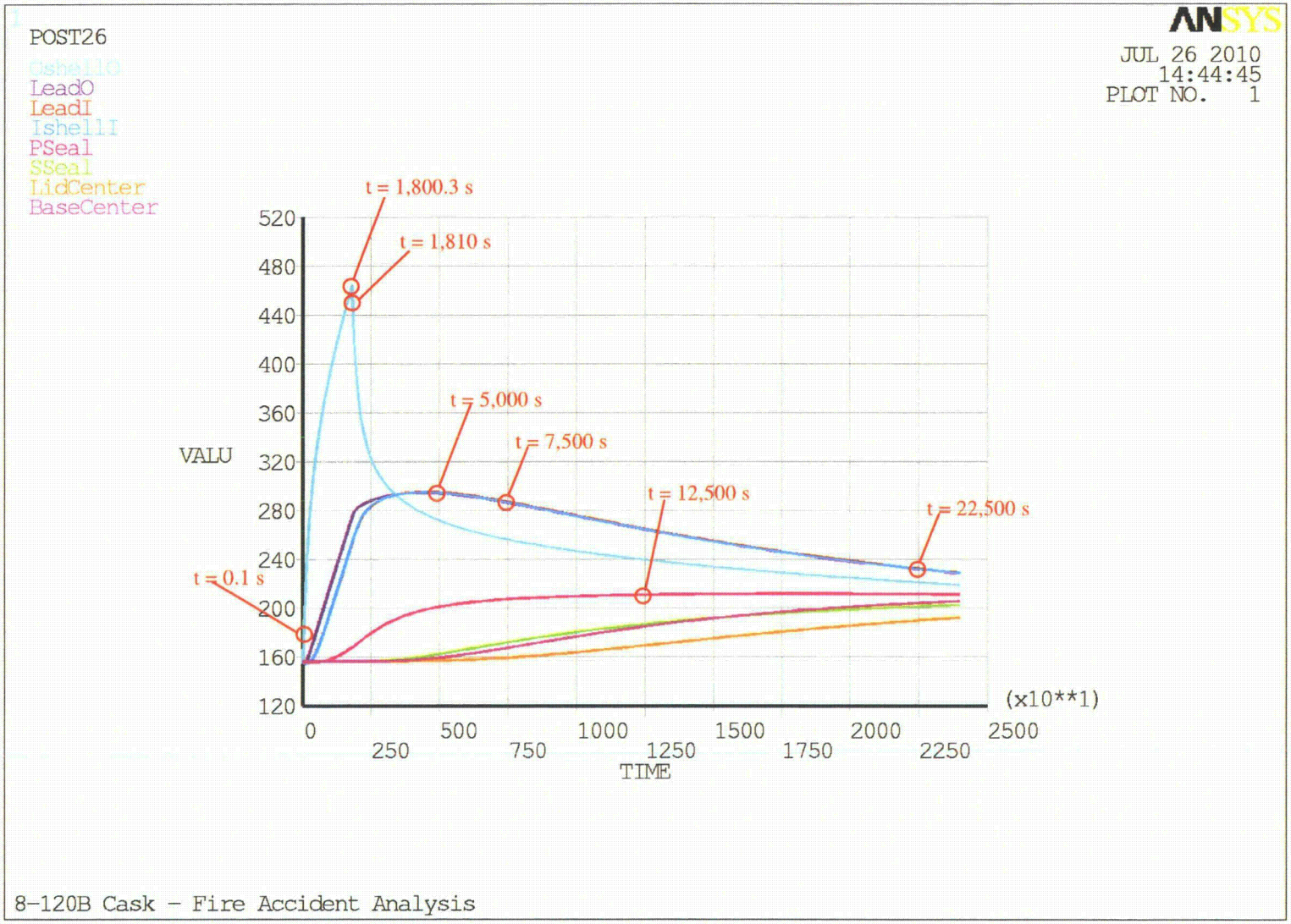

Figure 3-12
Temperature Time-History Plot in Various Components of the Cask (Not Under Direct Contact with the Fire)

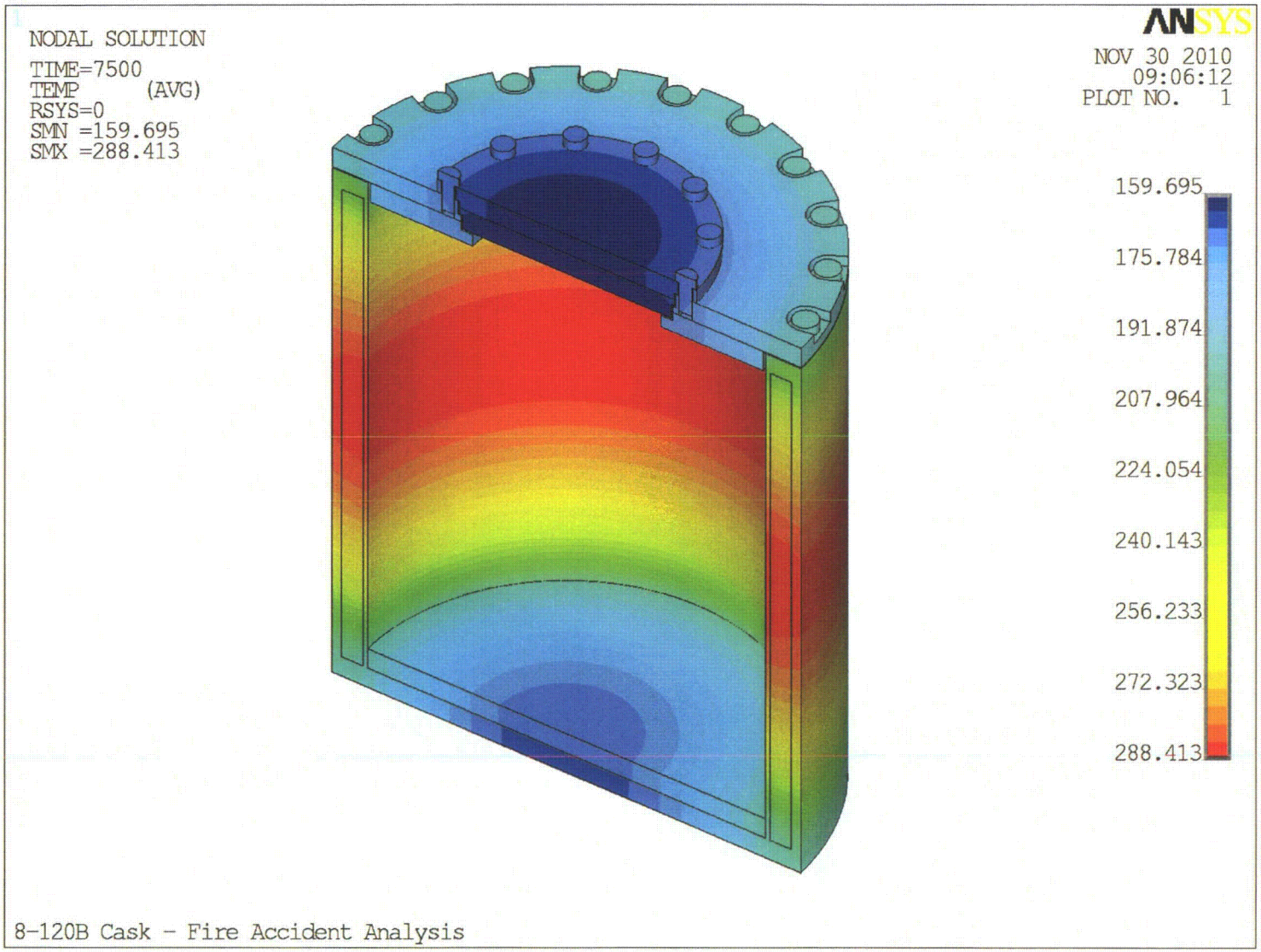

Figure 3-13
Temperature Distribution – 7,500 Sec. After the Start of the Fire
(Please refer to Reference 3-10 for temperature contour plots at various other times)

Figure 3-14
Temperature Distribution in the Cask Cavity – 40,289 Sec. After the Start of the Fire
(From 2-d Model)

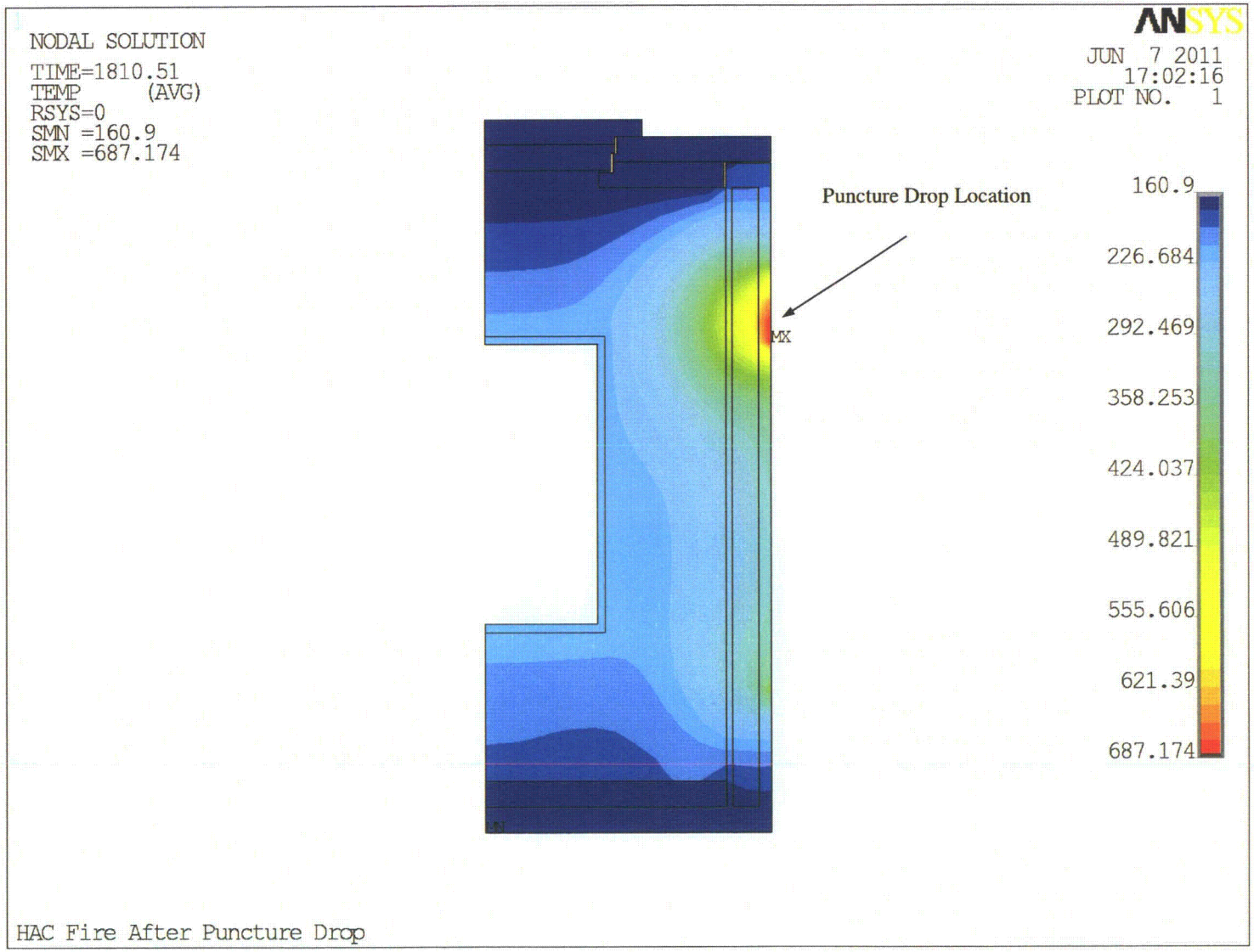

Figure 3-15
Temperature Distribution in the Cask with Puncture Drop Damage – 7,500 Sec. After the Start of the Fire (From 2-d Model)

4.0 Containment

This chapter describes the containment configuration of the Model CNS 8-120B Package for Normal Transport and Hypothetical Accident Conditions.

4.1 Description of Containment System

4.1.1 Containment Vessel

The package containment vessel is defined as the inner shell of the shielded transport cask, together with the associated lid, o-ring seals and lid closure bolts. The inner shell of the cask or containment vessel consists of a right circular cylinder of 62 inches inner diameter and 75 inches inside height. The shell is fabricated of ¾" thick carbon steel plate, ASTM A516-70. At the base, the cylindrical shell is attached to a circular end plate with full penetration welds. The primary lid is attached to the cask body with twenty (20) equally spaced 2-8 UN bolts. A secondary lid covers an opening in the primary lid and is attached to the primary lid using twelve (12) equally spaced 2-8 UN bolts. See Section 4.1.4 for closure details.

4.1.2 Containment Penetration

There are three penetrations of the containment vessel. These are (1) the primary lid with the containment boundary of the primary lid's inner o-ring; (2) the secondary lid with the containment boundary of the secondary lid's inner o-ring; and (3) the cask vent port located in the primary lid. A vent port penetrates the primary lid into the main cask cavity. The vent penetration is sealed with a Parker Stat-O-Seal. The primary and secondary lids are sealed with elastomeric o-rings.

4.1.3 Welds and Seals

The containment vessel is fabricated using full penetration groove welds. Seals are described in Sections 4.1.2 and 4.1.4.

4.1.4 Closure

The primary lid closure consists of two 3-1/4" thick laminated plates, stepped to fit over and within the top edge of the cylindrical body. The lid is supported at the perimeter of the cylindrical body by a thick plate (bolt ring) welded to the top of the inner and outer cylindrical body walls. This plate contains a 14-gauge stainless steel ring at a location, which corresponds to the sealing surface for the o-rings mounted in the lid. The lid is attached to the cask body by twenty (20) equally spaced 2-8 UN bolts. These bolts are torqued to 500 ft-lbs ± 10 % (lubricated). Two (2) solid elastomeric o-rings are retained in machined grooves at the lid perimeter. Groove dimensions prevent over-compression of the o-rings by the closure bolt pre-load forces and hypothetical accident impact forces. The cask is fitted with a secondary lid of similar construction attached to the primary lid with twelve (12) equally spaced identical bolts. The secondary lid is also sealed with two (2) solid, elastomeric o-rings in machined grooves.

The vent penetration is sealed with a Parker Stat-O-Seal, which is used beneath the heads of the hex head cap screws. Table 4.1 gives the torque values for the cap screws.

Location	Size (in.)	Torque Values (ft-lbs, ± 10% lubricated)
Vent Seal Bolt	1/2	20
Primary Lid	2-8UN	500
Secondary Lid	2-8UN	500

TABLE 4.1. Bolt and Cap Screw Torque Requirements

4.2 CONTAINMENT UNDER NORMAL CONDITIONS OF TRANSPORT

The 8-120B package is designed, fabricated, and leak tested to preclude release of radioactive materials in excess of the limits prescribed in 10CFR71.51(a)(1).

Of the permitted contents discussed in Section 1, two are considered in the following calculations as representative of the various types and forms permitted in the 8-120B; powdered solids and irradiated hardware. In this section and Section 4.2.1 below, the maximum permitted reference leakage rates (as defined in ANSI N14.5 – 1997 [Ref. 4.1]) for normal and hypothetical accident conditions are calculated for powdered solids and irradiated hardware waste forms, and the most restrictive of these (ie, the smallest leakage rate permitted) is taken as the reference leakage rate for the 8-120B cask and the basis for the acceptance criteria for leak testing. It is shown that the reference leakage rate (L_R) for the 8-120B cask is 1.54×10^{-6} ref-cm^3/sec, and that the release limits specified in 10CFR 71.51(a) (1) are met by limiting the release rate of the 8-120B to less than this value.

As discussed above, the most limiting type of radioactive waste contents permitted in the 8-120B is either powdered solids or irradiated hardware. The maximum permitted volumetric and reference leakage rates for Normal Conditions of Transport (NCT) are calculated for powdered solids and irradiated hardware ($L_{R_N_PS}$ and $L_{R_N_IH}$, respectively). Similar calculations are performed in Section 4.3 for Hypothetical Accident Conditions (HAC) ($L_{R_A_PS}$ and $L_{R_A_IH}$, respectively). The most restrictive of these four values is taken to be the maximum permitted reference leakage rate, L_R.

4.2.1 Maximum Permitted Leak Rate

In this section the maximum permitted leakage rate under Normal Conditions of Transport is calculated for the 8-120B package. 10CFR71.51(a)(1) states that the containment requirements for normal conditions of transport are:

> *...no loss or dispersal of radioactive contents, as demonstrated to a sensitivity of $10^{-6}A_2$ per hour, no significant increase in external radiation levels, and no substantial reduction in the effectiveness of the packaging.*

ANSI N14.5-1997 (Ref 4.1) states that the permissible leak rate shall be determined by Equation 4-1 below:

$$L := \frac{R}{C} \cdot \frac{cm^3}{sec} \qquad \text{Eqn. 4-1}$$

Where:

L = permissible volumetric leak rate (cm^3/sec)
R = package containment requirements (Ci/sec)
C = activity per unit volume of the medium that could escape from the containment system (Ci/cm^3)

For normal conditions of transport:

$R_N := A_2 \cdot 10^{-6} \cdot \frac{1}{hr} \quad \Rightarrow \quad R_N = 2.78 \times 10^{-10} \frac{A_2}{sec}$ 10CFR71

Determine the volume of the 8-120B cavity using dimensions from SAR drawing (Ref. 4.2):

$L_{cavity} := 75 \cdot in \qquad L_{cavity} = 190.5 \cdot cm$

$D_{cavity} := 61.8 \cdot in \qquad D_{cavity} = 156.972 \cdot cm$

The void volume of a typical hardware shipment and a powdered solids shipment are, respectively, 68% and 37% of the cask cavity volume. For leak rate calculations, the void volume (V_{cavity}) is conservatively assumed to be 25% of the cavity volume. Therefore,

$$V_{cavity} := \frac{(.25)\pi \cdot D_{cavity}^2 \cdot L_{cavity}}{4} \quad \Rightarrow \quad V_{cavity} = 9.217 \times 10^5 \cdot cm^3$$

In Sections 4.2.2 and 4.2.3 below, the maximum permitted volumetric leak rates under normal conditions of transport (L_N) are calculated for powdered solids and irradiated hardware respectively, and each is then converted into a reference leak rates (L_{R_N}).

4.2.2 Containment Under Normal Conditions of Transport (Powdered Solids)

Note: the following calculation for L_{N_PS} follows the methodology in NUREG/CR-6487 (Ref. 4.3)

C_{NPS} = concentration of releasable material during normal conditions of transport, C_i/cm^3

ρ = density of powder aerosol, g/cm^3

$\rho = 1 \times 10^{-6}$ g/cm^3 from NUREG/CR-6487 (Ref. 4.3)

Assume the mass (M) of the powdered solid is 60 grams and the activity (A) is 3000 A_2.

S_A = specific activity of the releasable material, A_2/g; = A/M = 50 A_2/g

$$C_{NP} := S_A \cdot \rho$$

Using Eqn. 4-1:

$$L_{N_PS} := \frac{R_N}{C_{NPS}}$$

Then, $L_{N_PS} = 5.556 \times 10^{-6}$ cm^3/sec **Maximum permitted volumetric leakage rate, normal conditions, powdered solids under the condition that the mass exceeds 60 grams or S_A is less than 50.**

Next, determine the Reference Leakage Rate, $L_{R_N_PS}$, normal conditions, powdered solids, for a volumetric leak rate L_{N_PS}:

$\mu_{air} := 0.0214 \cdot cP$ $\quad M_{air} := 29.0 \cdot \frac{gm}{mole}$ $\quad$ Ref. 4.1

$a := 0.6 \cdot cm$ $\quad$ assumed length for hole leaking air (equals o-ring diameter)

For normal conditions of transport:

$T_N = 180$ deg F $\quad$ MNOP = $P_{u_N} = 35$ psig $\quad$ from Chapter 3

$P_{u_N} := 3.38$ atm

$P_{d_N} := 1.0 \cdot atm$

$$P_{a_N} := \frac{P_{u_N} + P_{d_N}}{2} \qquad P_{a_N} = 2.19 at$$

Use Eqn. B.3, B.4, and B.5 in ANSI N14.5 - 1997. Determine the diameter of a hole, D_{max1} that would leak L_{N_PS}.

$L_{N_PS} := 5.56 \cdot 10^{-6} \cdot \frac{cm^3}{sec}$ $\quad$ From above.

$$F_{mn}(D_{max}) := \frac{\left[3.8 \cdot 10^3 \cdot (D_{max} \cdot cm)^3 \cdot \sqrt{\frac{T_N \cdot gm}{M_{air} \cdot K \cdot mole}}\right] \cdot cm}{a \cdot P_{a_N} \cdot sec}$$ Eqn B.3 from ANSI N14.5 - 1997

Also,

$$F_{cn}(D_{max}) := \frac{2.49 \cdot 10^6 \cdot (D_{max} \cdot cm)^4 \cdot cP}{a \cdot \mu_{air} \cdot atm \cdot sec}$$ Eqn B.4 from ANSI N14.5 - 1997

Use Eqn. B.5 from ANSI N14.5 - 1997. Let D_{max1} represent the diameter of the hole that will leak L_{N_PS}:

Solve for D_{max1}:

$$L(D_{max1}) := \left[\left(F_{cn}(D_{max1}) + F_{mn}(D_{max1})\right) \cdot \left(P_{u_N} - P_{d_N}\right) \cdot \frac{P_{a_N}}{P_{u_N}} \right] - L_{N_PS}$$

$D_{max1} = 3.57 \times 10^{-4}$ cm

Now calculate $L_{R_N_PS}$ based on D_{max1}. At standard conditions:

$P_{u_S} := 1.0 \cdot atm$ $\quad$ $P_{d_S} := 0.1 \cdot atm$

$P_{a_S} = 0.55\ atm$ $\quad$ $T_S := 298 \cdot K$

Eqns B.3, B.4, and B.5 at standard conditions become:

$$F_{mstd}(D_{max}) := \frac{3.81 \cdot 10^3 \cdot (D_{max} \cdot cm)^3 \cdot \sqrt{\frac{T_S \cdot gm}{M_{air} \cdot K \cdot mole}} \cdot cm}{a \cdot P_{a_S} \cdot sec}$$

Simplify this equation:

$$F_{mstd}(D_{max}) \rightarrow 37010.092359370447894 \cdot D_{max}^{\ 3} \cdot \frac{cm^3}{atm \cdot sec}$$

$$F_{cstd}(D_{max}) := \frac{2.49 \cdot 10^6 \cdot D_{max}^{\ 4} \cdot cm^4 \cdot cP}{a \cdot \mu_{air} \cdot atm \cdot sec}$$

Simplify this equation:

$$F_{cstd}(D_{max}) \rightarrow 224324324.32432432432 \cdot D_{max}^{\ 4} \cdot \frac{cm^3}{atm \cdot sec}$$

Therefore, Eqn. B.5 at standard conditions and a hole diameter D_{max1} is:

$$L_{R_N_PS}(D_{max1}) := \left(F_{cstd}(D_{max1}) + F_{mstd}(D_{max1})\right) \cdot \left(P_{u_S} - P_{d_S}\right) \cdot \frac{P_{a_S}}{P_{u_S}}$$

Eqn B.5 from ANSIN14.5 - 1997

Thus,

$$L_{R_N_P}(D_{max1}) = 2.64 \times 10^{-6} \frac{cm^3}{sec}$$

Standard leak rate, normal conditions, powdered solids.

4.2.3 Containment Under Normal Conditions of Transport (Irradiated Hardware)

Assume that the worst case source term for irradiated hardware is control rod blades having the same type and level of surface contamination as spent fuel, and that the potentially releasable contents from the control rod blades is entirely from this surface contamination. The surface contamination on the control rod blades that is equivalent to spent fuel is characterized in NUREG/CR-6487 (Ref. 4.3).

The following information was derived from Ref. 4.3, except as noted:

- bounding value for surface activity; worst case is for BWR fuel, $S_B = 1254 \times 10^{-6}$ Ci/cm^2
- surface area of control rod blade, $SA_B = 44{,}500$ cm^2, cruciform shape has 4 blade surfaces, blade width = 9.8", length conservatively assumed to be 175", A = 4 x 9.8" x 175", see Ref. 4.3
- A_2 for BWR fuel crud, normal transport conditions = 11.0 Ci
- fraction of surface activity that can spall off the surface of a blade and therefore is potentially releasable, normal transport conditions, $f_N = .15$

In addition, conservatively set the weight of control rod blade at 200 lbs, Ref. 4.3.

Given:

- weight capacity of 8-120B cask = 14680 lbs. (Chapter 1)
- number of control rod blades that can be transported in the 8-120B; assume 100% packing efficiency; N
- C_{NIH} = activity concentration in the cavity that could potentially escape during normal conditions of transport, irradiated hardware, C_i/cm^3
- total surface activity available for release on the surface of the control rod blades, normal transport conditions, RL_N:
- number of control rod blades in the cavity = N

N=73 blades

N = 14680/200

$f_N := .15$

$S_B := 1254 \cdot 10^{-6} \cdot \frac{C_i}{cm^2}$

$SA_B := 44500 \cdot cm^2$

$RL_N := N \cdot S_B \cdot SA_B \cdot f_N \quad \Rightarrow \quad RL_N = 6.11 \times 10^2 \; C_i$

$C_{NIH} := \frac{RL_N}{V_{cavity} \cdot (11.0)} \quad \Rightarrow \quad C_{NIH} = 6.027 \times 10^{-5} \cdot cm^{-3}$

from Eqn. 1-1 above:

$$L_{N_IH} := \frac{R_N}{C_{NIH}} \qquad L_{N_I} = 4.609 \times 10^{-6} \frac{cm^3}{sec}$$

Maximum permitted volumetric leakage rate, normal conditions of transport, for irradiated hardware.

Next, determine the Reference Leakage Rate, $L_{R_N_IH}$, normal conditions, irradiated hardware, for a volumetric leak rate L_{N_IH}:

Follow the same steps used above. First, determine a D_{max2} that would leak L_{N_IH}:

Use Eqn. 4-2:

$$L(D_{max2}) := \left[\left(F_{cn}(D_{max2}) + F_{mn}(D_{max2})\right) \cdot \left(P_{u_N} - P_{d_N}\right) \cdot \frac{P_{a_N}}{P_{u_N}} \right] - L_{N_IH}$$

Solve this equation for D_{max2}:

$$D_{max2} := 3.4 \cdot 10^{-4} cm$$

Now substitute D_{max2} into Eqn. B.5 and determine $L_{R_N_IH}$ at standard conditions:

$$L_{R_N_IH}(D_{max2}) := \left(F_{cstd}(D_{max2}) + F_{mstd}(D_{max2})\right)\cdot\left(P_{u_S} - P_{d_S}\right)\cdot\frac{P_{a_S}}{P_{u_S}}$$

$L_{R_N_IH}(D_{max2}) = 2.20 \times 10^{-6}$ cm^3/sec **Standard leak rate, normal conditions, irradiated hardware.**

4.3 CONTAINMENT UNDER HYPOTHETICAL ACCIDENT CONDITIONS OF TRANSPORT (TYPE B PACKAGES)

In this section the maximum permitted leakage rates under Hypothetical Accident Conditions are calculated for the 8-120B package. 10CFR71.51(a)(2) states that the containment requirements for Hypothetical Accident Conditions are:

> *...no escape of krypton-85 exceeding 10A_2 in 1 week, no escape of other radioactive material exceeding a total amount A_2 in 1 week, and no external radiation dose rate exceeding 10 mSv/h (1 rem/h) at 1 m (40 in) from the external surface of the package.*

Following the methodology from Section 4.2 in Sections 4.3.1 and 4.3.2 below, the maximum permitted volumetric leakage rates under Hypothetical Accident Conditions are calculated for powdered solids and irradiated hardware, L_{A_PS} and L_{A_IH} respectively. In Section 4.3.1 the reference leakage rate corresponding to L_{A_PS}, $L_{R_A_PS}$, is calculated, and in Section 4.3.2 the reference leakage rate corresponding L_{A_IH}, $L_{R_A_IH}$, is calculated.

In Section 4.4, $L_{R_A_PS}$ and $L_{R_A_IH}$ are compared to the reference leakage rates for Normal Conditions of Transport calculated in Section 4.2.1 to determine the most restrictive, and thus the reference air leakage rate for the 8-120.

$R_A := 1\cdot\frac{A_2}{week}$ $\qquad R_A = 1.65\times10^{-6}\frac{A_2}{sec}$ $\qquad$ 10CFR71

4.3.1 Containment Under Hypothetical Accident Conditions (Powdered Solids)

Use the same parameters as Section 4.2.2:

C_{APS} = concentration of releasable materials during hypothetical accident conditions, C_i/cm^3

$C_{APS} := C_{NPS}$

Using Eqn 1-1:

$$L_{A_PS} := \frac{R_A}{C_{APS}}$$

$L_{A_PS} = 0.033$ cm^3/sec **Volumetric leakage rate, hypothetical accident conditions, powdered solids**

Next, determine the reference leakage rate, $L_{R_A_PS}$, accident conditions, powdered solids, for a volumetric leak rate L_{A_PS}:

$P_{d_A} := 1 \cdot atm$ $\mu_{air} := 0.0185 \cdot cP$ $M_{air} := 29.0 \cdot \frac{gm}{mole}$ Ref. 4.1

$a := 0.6 \cdot cm$ assumed length for hole leaking air (equals o-ring diameter)

For hypothetical accident conditions:

$T_A = 325$ deg F HACP = $P_{u_A} = 155$ psig

$P_{u_A} := 155$ psig From Section 3

$P_{u_A}(x) := (x \cdot psig + 14.7) \cdot psi$

$P_{u_A} := 11.6 \cdot atm$

$P_{d_A} := 1 \cdot atm$

$P_{a_A} := \frac{P_{u_A} + P_{d_A}}{2}$ $P_{a_A} = 6.28$ atm

Equations B.3 and B.4 at accident conditions are as follows:

$$F_{mA}(D_{max}) := \frac{3.8 \cdot 10^3 \cdot (D_{max} \cdot cm)^3 \cdot \sqrt{\frac{T_A \cdot gm}{M_{air} \cdot K \cdot mole}} \cdot cm}{a \cdot P_{a_A} \cdot sec}$$

Eqn B.3 from ANSI N14.5 - 1997

$$F_{mA}(D_{max}) \rightarrow \frac{3913.1984257554438542 \cdot D_{max}^3 \cdot cm^3}{atm \cdot sec}$$

$$F_{cA}(D_{max}) := \frac{2.49 \cdot 10^6 \cdot (D_{max} \cdot cm)^4 \cdot cP}{a \cdot \mu_{air} \cdot atm \cdot sec} \quad F_{cA}(D_{max}) \rightarrow \frac{1.8526785714285714286e8 \cdot D_{max}^4 \cdot cm^3}{atm \cdot sec}$$

Eqn B.4 from ANSI N14.5 - 1997

Let D_{max3} represent the diameter of the hole that will leak L_{A_PS}:

$$L_{A_PS} := 0.033 \cdot \frac{cm^3}{sec}$$

$$L(D_{max3}) := \left[\left(F_{cA}(D_{max3}) + F_{mA}(D_{max3})\right) \cdot \left(P_{u_A} - P_{d_A}\right) \cdot \frac{P_{a_A}}{P_{u_A}} \right] - L_{A_PS}$$

Solve this equation for D_{max3}:

$$D_{max3} := 2.4 \cdot 10^{-3} \ cm$$

Substitute this value of D_{max3} into Eqn B.3 at standard conditions:

$$L_{R_A_PS}(D_{max3}) := \left(F_{cstd}(D_{max3}) + F_{mstd}(D_{max3})\right) \cdot \left(P_{u_S} - P_{d_S}\right) \cdot \frac{P_{a_S}}{P_{u_S}}$$

$$L_{R_A_PS}(D_{max3}) = 0.004 \frac{cm^3}{sec}$$ **Standard leak rate, accident conditions, powered solids.**

4.3.2 Containment Under Hypothetical Accident Conditions (Irradiated Hardware)

(See Section 4.4 for the basic assumptions regarding control rod blades and irradiated hardware.) For accident conditions:

- A_2 for BWR fuel, accident conditions = 11.0 Ci (Ref. 4.3)
- fA = 1.0 (Ref. 4.3) fraction of surface activity potentially that can spall off surface of a blade and therefore is potentially releasable under accident conditions,

C_{AIH} = activity concentration in the cavity that could potentially escape during accident conditions, irradiated hardware, C_i/cm^3

$RL_A := N \cdot S_B \cdot SA_B \cdot f_A \quad RL_A = 4.07 \times 10^3 \cdot C_i$

$C_{AIH} := \frac{RL_A}{V_{cavity} \cdot (11.0)} \qquad C_{AIH} = 4.02 \times 10^{-4} \frac{A_2 \cdot C_i}{c^3}$

$L_{A_IH} := \frac{R_A}{C_{AIH}} \quad L_{A_IH} = 4.12 \times 10^{-3} \cdot \frac{cm^3}{sec}$

Volumetric leak rate, Hypothetical Accident Conditions, Irradiated hardware

Next, determine the reference leakage rate, $L_{R_A_IH}$, accident conditions, irradiated hardware, for a volumetric leak rate L_{A_IH}:

Follow the same steps used in Section 4.3.1 above. First, determine a D_{max4} that would leak L_{A_IH}:

$L_{A_IH} := 4.12 \cdot 10^{-3} \cdot \frac{cm^3}{sec}$ From above.

$$L(D_{max4}) := \left[\left(F_{cA}(D_{max4}) + F_{mA}(D_{max4})\right) \cdot \left(P_{u_A} - P_{d_A}\right) \cdot \frac{P_{a_A}}{P_{u_A}} \right] - L_{A_IH}$$

Solve this equation for D_{max4}

$D_{max4} := 1.40 \cdot 10^{-3}$ cm

Now substitute D_{max4} into Eqn B.5 and determine $L_{R_A_IH}$ at standard conditions:

$$L_{R_A_IH}(D_{max4}) := \left(F_{cstd}(D_{max4}) + F_{mstd}(D_{max4})\right) \cdot \left(P_{u_S} - P_{d_S}\right) \cdot \frac{P_{a_S}}{P_{u_S}}$$

$L_{R_A_IH}(D_{max4}) = 4.77 \times 10^{-4} \cdot \frac{cm^3}{sec}$ **Standard leak rate, accident conditions, irradiated hardware.**

4.4 Reference Air Leakage Rate

The following table summarizes results in Sections 4.2 and 4.3 above:

	Max. Volumetric Leak Rate (cm^3/sec)	Max. Hole Diameter (cm)	Reference Leak Rate (cm^3/sec)
Normal Conditions of Transport, Powdered Solids	$L_{N_PS} = 5.56 \times 10^{-6}$	$D_{max1} = 3.57 \times 10^{-4}$	$L_{R_N_PS} = 2.64 \times 10^{-6}$
Normal Conditions of Transport, Irradiated Hardware	$L_{N_IH} = 4.61 \times 10^{-6}$	$D_{max2} = 3.4 \times 10^{-4}$	$L_{R_N_IH} = 2.20 \times 10^{-6}$
Hypothetical Accident Conditions, Powdered Solids	$L_{A_PS} = 0.033$	$D_{max3} = 2.40 \times 10^{-3}$	$L_{R_A_PS} = 0.004$
Hypothetical Accident Conditions, Irradiated Hardware	$L_{A_IH} = 4.12 \times 10^{-3}$	$D_{max4} = 1.40 \times 10^{-3}$	$L_{R_A_IH} = 4.77 \times 10^{-4}$

The reference leak rate for powdered solids was determined based on the assumption that the powdered solid source has a mass of at least 60 grams or the SA is less than 50. With these constraints, $L_{R_N_PS}$ is not the most restrictive leak rate. The most restrictive reference leak rate is $L_{R_N_IH}$, for normal conditions of transport, irradiated hardware, and will be the reference leak rate for the cask. Therefore, for the 8-120B cask:

$$L_R := 2.20 \cdot 10^{-6} \cdot \frac{ref \cdot cm^3}{sec}$$ **8-120B cask reference air leakage rate**

4.5 Determination of Equivalent Reference Leakage Rate for R-134a Gas

The purpose of this calculation is to determine the allowable leak rate using the R-134a halogen gas that may be used to perform the annual verification leak tests on the 8-120B cask. This halogen gas is now in widespread use as a replacement gas for R-12 in many industrial applications.

This calculation uses formulas presented in ANSI N14.5 - 1997.

$$L_R = 2.2 \times 10^{-6} \frac{cm^3}{sec}$$

As calculated above, maximum diameter hole through the O-ring corresponding to this leakage rate is:

$$D_{MAX} := D_{max2} \cdot cm \quad \Rightarrow \quad D_{MAX} = 3.4 \times 10^{-4} \cdot cm$$

Determine the equivalent air/R134a mixture (L_{mix}) that would leak from D_{MAX} during a leak test. Assume the cask void is first evacuated to 20" Hg vacuum (9.92" Hg abs) and then pressurized to 25 psig (2.7 atm) with an air/R134a mixture.

$P_{mix} := 2.701 \cdot atm \qquad P_{air} := 9.92 \cdot in_Hg = 0.332 \cdot atm$

$P_{R134a} := P_{mix} - P_{air} \qquad \Rightarrow \qquad P_{R134a} = 2.37 \cdot atm$

$P_d := 1.0 \cdot atm$

$$P_a := \frac{P_{mix} + P_d}{2} \qquad \Rightarrow \qquad P_a = 1.85 \cdot atm$$

The properties of R134a are :

$$M_{R134a} := 102 \cdot \frac{gm}{mole}$$

$$\mu_{R134a} := 0.012 \cdot cP$$

$$M_{mix} := \frac{M_{R134a} \cdot P_{R134a} + M_{air} \cdot P_{air}}{P_{mix}} \qquad M_{mix} = 93.04 \cdot \frac{gm}{mole} \qquad \text{Eqn. B7 - ANSI N14.5}$$

$$\mu_{mix} := \frac{\mu_{air} \cdot P_{air} + \mu_{R134a} \cdot P_{R134a}}{P_{mix}} \qquad \mu_{mix} = 0.0128 \cdot cP \qquad \text{Eqn. B8 - ANSI N14.5}$$

Determine L_{mix} as a function of temperature. Assume the viscosities of air and R134a do not change significantly over the range of temperatures evaluated:

$T := 273, 278 .. 328 \ ^{o}K$ Temperature range for test: 32°F to 130°F

$$F_c := \frac{2.49 \cdot 10^6 \cdot D_{MAX}^4 \cdot cP \cdot ref}{a \cdot \mu_{mix} \cdot sec \cdot atm} \qquad \text{then,} \qquad F_c = 4.541 \times 10^{-6} \cdot \frac{cm^3}{atm \cdot sec}$$

$$F_m(T) := \frac{3.81 \cdot 10^3 \cdot D_{MAX}^3 \cdot \sqrt{\frac{T}{M_{mix}}} \cdot cm \cdot gm^{0.5}}{a \cdot P_a \cdot mole^{0.5} \cdot sec}$$

$$L_{mix}(T) := \left(F_c + F_m(T)\right)\cdot\left(P_{mix} - P_d\right)\cdot\frac{P_a}{P_{mix}}$$

$$T_F(T) := \left[(T - 273)\cdot\frac{9}{5} + 32\right]\cdot F$$

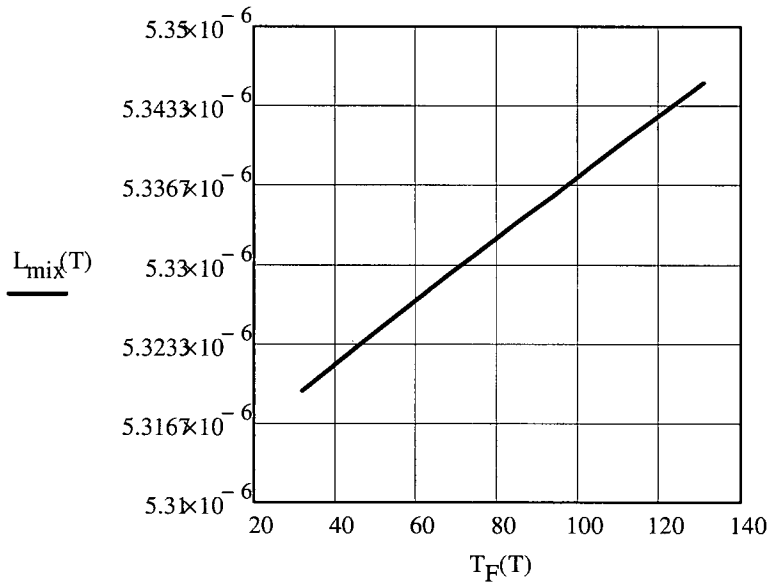

Fig.4.1 - Allowable R-134a/Air Mixture Test Leakage, cm^3/sec, versus test temperature, deg.F

The R-134a component of this leak rate can be determined by multiplying the leak rate of the mixture by the ratio of the R-134a partial pressure to the total pressure of the mix, as follows.

$$L_{R134a}(T) := L_{mix}(T)\cdot\frac{P_{R134a}}{P_{mix}}$$

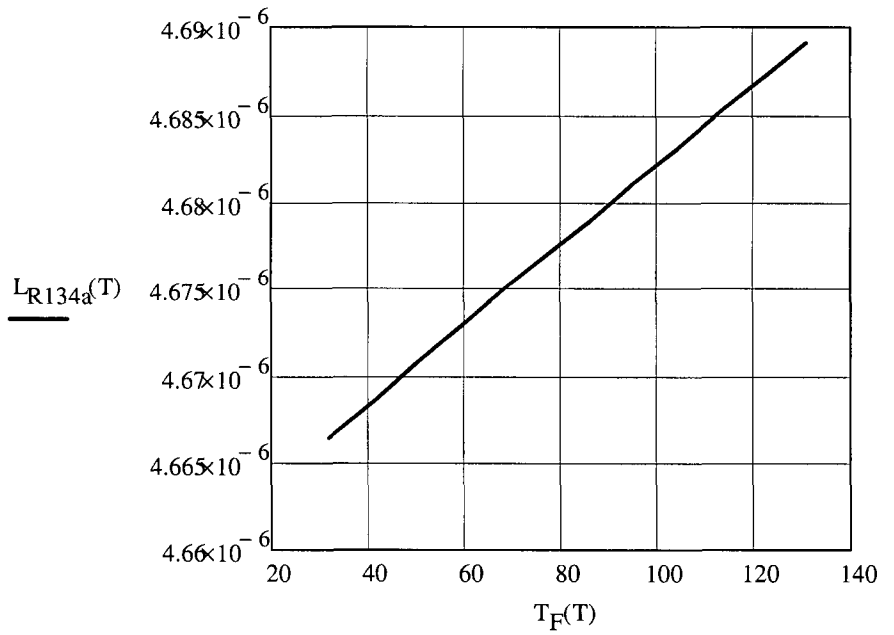

Fig. 4.2 - Allowable R-134a Test Leakage, cm^3/sec, versus Test Temperature, °F

Determine the equivalent mass flow rate for L_{R134a} in oz/yr:

$$N(T) := \frac{P_{R134a} \cdot V}{R_o \cdot T}$$ Ideal Gas Law

where,

$$R_o := \frac{82.05 \cdot cm^3 \cdot atm}{mole} \qquad V := 1 \cdot cm^3$$

This data can then be used to convert the volumetric leak rate for R-134a calculated above to a mass leak rate. By dividing N by V, the number of moles per unit volume can be multiplied by the molecular weight of the gas and the maximum allowable volumetric leak rate to determine the maximum allowable mass leak rate, as a function of test temperature as shown in the graph below. The conversion from grams per second to ounces per year is also shown below.

$$\frac{gm}{sec} = 1.11 \times 10^6 \frac{oz}{yr}$$ Conversion of gm/sec to oz/yr

$$L(T) := L_{R134a}(T) \cdot \frac{N(T)}{V} \cdot M_{R134a}$$

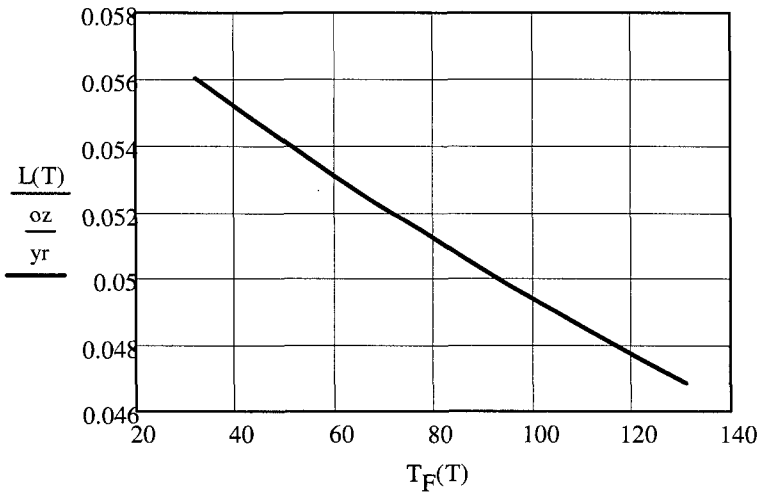

Fig. 4.3 - Allowable R-134a Test Leakage, oz/yr, versus Test Temperature, °F

Figure 4.4 can be used to determine the allowable leak rate based on the temperature at the time of the test. A simplified version of the equation can be used to validate the curve:

$$L(T_F) = 4.872 \times 10^{-2} \times (^5/_9 \times T_F + 255.2)^{-0.5} + 15.28 \times (^5/_9 \times T_F + 255.2)^{-1}$$

According to ANSI N14.5 methodology, the maximum allowable leak rate must be divided by 2 to determine the minimum sensitivity for the test. A graph of the required sensitivity in oz/yr is presented below:

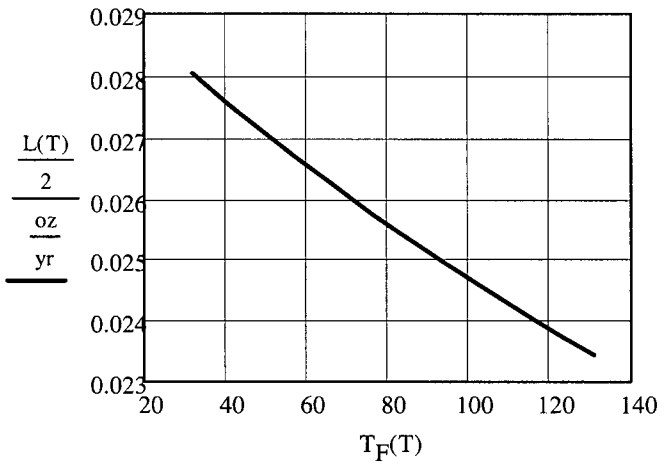

Fig. 4.4 - Allowable R-134a test leakage sensitivity, oz/yr, versus test temperature, °F

A simplified version of the equation can be used to validate the sensitivity curve:

$$L(T_F)/2 = 2.436 \times 10^{-2} \times (^5/_9 \times T_F + 255.2)^{-0.5} + 7.64 \times (^5/_9 \times T_F + 255.2)^{-1}$$

4.6 Determination of Equivalent Reference Leakage Rate for Helium Gas

The purpose of this calculation is to determine the allowable leak rate using the Helium gas that may be used to perform the annual verification leak tests on the 8-120B cask.

This calculation uses formulas presented in ANSI N14.5 - 1997.

$$L_R = 2.2 \times 10^{-6} \frac{cm^3}{sec}$$

As calculated above, maximum diameter hole through the O-ring corresponding to this leakage rate is:

$$D_{MAX} := D_{max2} \cdot cm \qquad \Rightarrow \qquad D_{MAX} = 3.4 \times 10^{-4} \cdot cm$$

Determine the equivalent air/helium mixture (L_{mix}) that would leak from D_{MAX} during a leak test. Assume the cask void is first evacuated to 20" Hg vacuum (9.92" Hg abs) and then pressurized to 1 psig (1.07 atm) with an air/helium mixture.

$P_{air} = 0.33\,atm$ $\quad P_d = 0.01\,at$ $\quad P_{mix} = 1.07\,at$

$$P_{He} := P_{mix} - P_{air}$$

$$P_a := \frac{P_{mix} + P_d}{2} \qquad P_a = 0.54\,atm$$

$$M_{He} := 4.0 \cdot \frac{g}{mol}$$ ANSI N14.5 - 1997

$$\mu_{He} := 0.0198 \cdot cP$$ ANSI N14.5 - 1997

$$M_{mi} := \frac{M_{He} \cdot P_{He} + M_{air} \cdot P_{air}}{P_{mi}} \qquad M_{mix} = 11.75\ \frac{gm}{mole}$$ Eqn. B7 - ANSI N14.5

$$\mu_{mi} := \frac{\mu_{air} \cdot P_{air} + \mu_{He} \cdot P_{He}}{P_{mi}} \qquad \mu_{mi} = 0.019\,cP$$ Eqn. B8 - ANSI N14.5

Determine L_{mix} as a function of temperature. Assume the viscosities of air and Helium do not change significantly over the range of temperatures evaluated:

$T := 273, 278 .. 328\ {}^{\circ}K$ Temperature range for test: 32°F to 130°F

$$F_c := \frac{2.49 \cdot 10^6 \cdot D_{MAX}^4 \cdot cP \cdot std}{a \cdot \mu_{mix} \cdot sec \cdot atm}$$ Eqn. B3 – ANSI N14.5

$$F_m(T) := \frac{3.81 \cdot 10^3 \cdot D_{MAX}^3 \cdot \sqrt{\frac{T}{M_{mix}}} \cdot cm \cdot gm^{0.5}}{a \cdot P_a \cdot mole^{0.5} \cdot sec}$$ Eqn. B4 – ANSI 14.5

$$L_{mix}(T) := \left(F_c + F_m(T)\right) \cdot \left(P_{mix} - P_d\right) \cdot \frac{P_a}{P_{mix}}$$ Equation B5, ANSI N14.5

$$T_F(T) := \left[(T - 273)\cdot\frac{9}{5} + 32\right]\cdot F$$

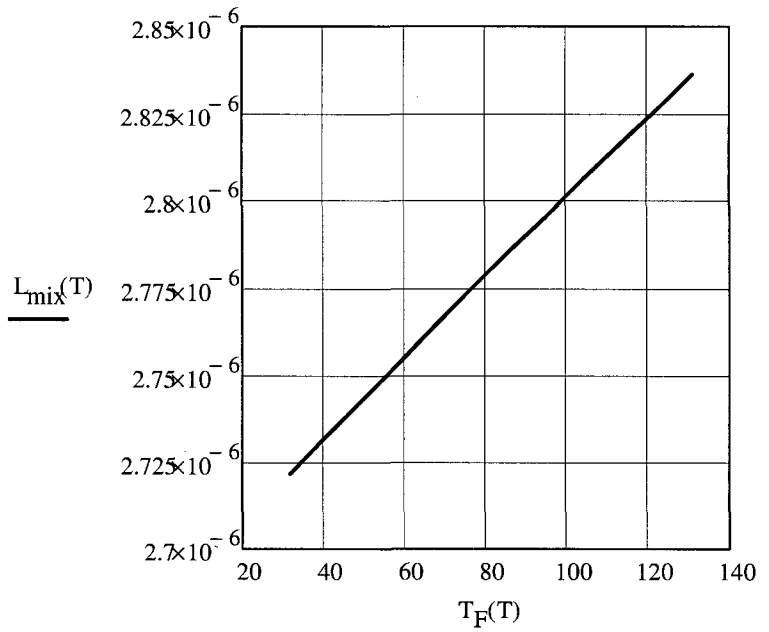

Fig. 4.5 - Allowable He/Air Mixture Test Leakage, cm^3/sec, versus test temperature, °F

The Helium component of this leak rate can be determined by multiplying the leak rate of the mixture by the ratio of the Helium partial pressure to the total pressure of the mix, as follows.

$$L_{He}(T) := L_{mix}(T)\cdot\frac{P_{He}}{P_{mix}}$$

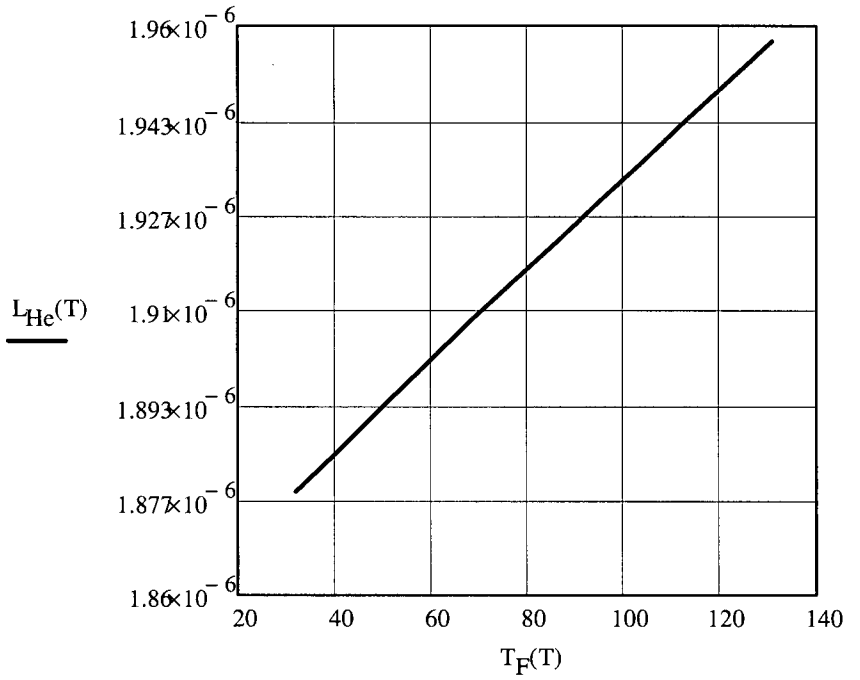

Fig. 4.6 - Allowable He Test Leakage, cm^3/sec, versus test temperature, °F

Figure 4.6 can be used to determine the allowable leak rate based on the temperature at the time of the test. A simplified version of the equation can be used to validate the curve:

$$L_{He}(T_F) = 2.114 \times 10^{-6} + 5.193 \times 10^{-8} \times (^5/_9 \times T_F + 255.2)^{0.5}$$

According to ANSI N14.1 methodology, the maximum allowable leak rate must be divided by 2 to determine the minimum sensitivity for the test. A graph of the required sensitivity is presented below.

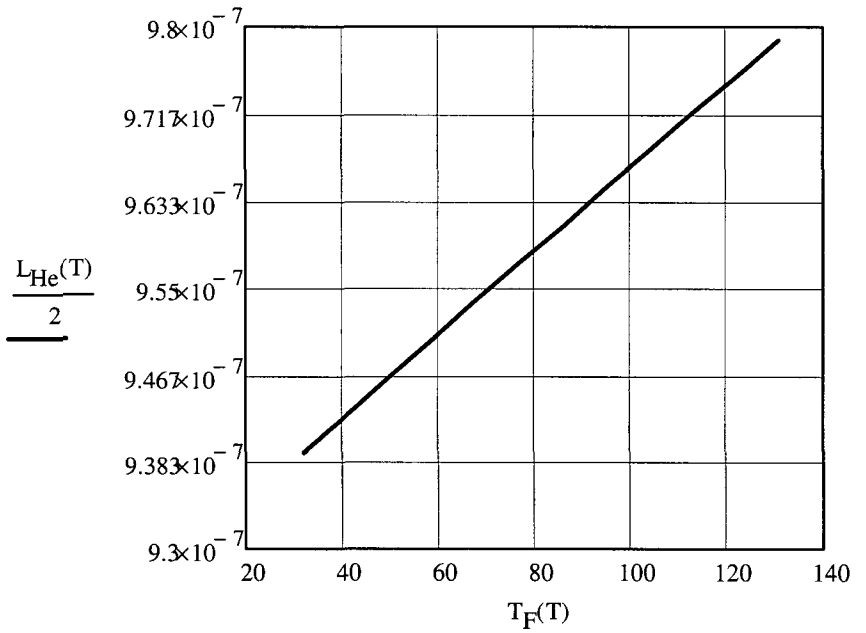

Fig. 4.7 - Allowable helium test leakage sensitivity, cm^3/sec, versus test temperature, °F

A simplified version of the equation can be used to validate the sensitivity curve:

$$L_{He}(T_F) = (2.114 \times 10^{-6} + 5.193 \times 10^{-8} \times (^5/_9 \times T_F + 255.2)^{0.5}) \div 2$$

4.7 Determining Time for Pre-Shipment Leak Test Using Air or Nitrogen

The pre-shipment leak test is to be performed by the pressure drop test method using air or nitrogen. The test will be performed on the closure lid, and may also be performed on the vent port if this has been operated since the last test. In this section the minimum hold time for each of the tests is determined.

4.7.1 Minimum Hold Time for Closure Lid

The pre-shipment leak test is performed by charging the annulus between the O-rings of the closure lid with air at 18 psig and holding the pressure for the prescribed time. The maximum volume of the test manifold is 10 cm^3, which is added to the annulus volume.
The annulus between the O-rings is 1/8" deep and 1/8" wide with a center-line diameter (primary lid) of 63 $^7/_8$". The volume of the annulus is:

$$ID_{ann} := \left[(63.875) - \frac{1}{8}\right]\cdot in \quad \Rightarrow \quad ID_{ann} = 63.75\cdot in$$

$$OD_{ann} := \left(63.875 + \frac{1}{8}\right)\cdot in \quad \Rightarrow \quad OD_{ann} = 64.00\cdot in$$

$$V_{ann} := \frac{\pi}{4}(.125\cdot in)\left(OD_{ann}^{\ 2} - ID_{ann}^{\ 2}\right)$$

$$V_{ann} = 3.14\cdot in^3 \quad \Rightarrow \quad V_{ann} = 51.38\cdot cm^3$$

$$V_T := V_{ann} + 10\ cm^3 \qquad V_T = 61.4\ cm^3$$

Use Equation B.14 from ANSI N14.5 to determine the required hold time given the maximum permitted leak rate, where:

L = atm-cm^3 of air at standard conditions
V_{ann} = gas volume in the test annulus
T_s = reference absolute temperature, 298°K
H = test duration, hrs
P_s = standard pressure, 1 atm
P_1 = gas pressure in annulus at start of test, 1.232 atm (18.1 psig)
P_2 = gas pressure in annulus at end of test, 1.225 atm (18.0 psig)
T_1 = gas temperature in annulus at start of test, ^{o}K
T_2 = gas temperature in annulus at end of test, ^{o}K

$T_s := 298 \cdot K$ $\quad T_1 := T_s$ $\quad T_2 := T_s$

$P_s := 1 \cdot atm$

$P_1 - P_2 = P_{delta}$ Maximum permitted P_d = sensitivity of pressure gage:

$P_{delta} := .1 \cdot psi$ $\quad P_{delta} = 0.007 \cdot atm$

$$L := \frac{V_T \cdot T_s}{3600 \cdot H \cdot P_s} \cdot \left(\frac{P_1}{T_1} - \frac{P_2}{T_2} \right) \cdot \frac{cm^3}{sec}$$ **Eqn. 4.7-1**

The maximum permitted sensitivity for the pre-shipment leak test as prescribed in ANSI N14.5 - 1997 is 10^{-3} ref-cm^3/sec. From Equation B.17 in ANSI N14.5, the maximum permitted leak rate when the sensitivity is prescribed is:

$L \leq S/2$ therefore,

$$L := \frac{10^{-3}}{2} \cdot \frac{cm^3}{sec}$$

Rearrange Eqn 4.7-1 to solve for H:

$$H := \frac{V_T \cdot T_s \cdot P_{delta}}{3600 \cdot \frac{sec}{hr} \cdot L \cdot P_s \cdot T_s}$$ **Eqn. 4.7-2**

$H = 13.92 \cdot min$

For conservatism, the test will be conducted for 15 minutes.

The smaller diameter secondary lid will be conservatively tested for the same time as the primary.

4.7.2 Minimum Hold Time for Vent Port

Volume of vent port cavity:

$$V_{vent} := \frac{\pi}{4}(1.875 \cdot in)^2 \cdot 1.125 \cdot in$$

Volume of seal plug head inside vent port cavity:

$$V_{seal} := \frac{\pi}{4}(1.5 \cdot in)^2 \cdot (1 \cdot in)$$

$$V_{test} := V_{vent} - V_{seal} \qquad V_{test} = 21.945 \cdot cm^3$$

$$V_T := V_{test} + 31.6 \cdot cm^3$$

$$H := \frac{V_T \cdot T_s \cdot P_{delta}}{3600 \cdot \frac{sec}{hr} \cdot L \cdot P_s \cdot T_s} \qquad H = 0.202 \cdot hr \qquad H = 12.145 \cdot min$$

For conservatism, the test will be conducted for 15 minutes.

4.8 Leakage Rate Tests for Type B Packages

The following leakage tests are conducted on the 8-120B package as required by ANSI N14.5:

Table 4.2
Leakage Tests of the 3-60B Package

Test	Frequency	Test Gas	Acceptance Criteria	Procedure
Maintenance	After maintenance, repair (such as weld repair), or replacement of components of the containment system.	R-134a, or helium (optional)	$\leq L_R^*$	8.2.2.1
Fabrication	Prior to first use of the 8-120B.			8.1.4
Periodic	Within 12 months prior to each shipment.			8.2.2.1
Pre-Shipment	Before each shipment, after the contents are loaded and the package is closed.**	nitrogen or air (optional)	sensitivity $\leq 10^{-3}$ ref-cm^3/sec	8.2.2.2

* Adjusted for the individual properties of the test gas; sensitivity is $\leq L_R/2$.

**The pre-shipment leak test is not required for contents that meet the definition of low specific activity material or surface contaminated objects in 10CFR71.4, and also meet the exemption standard for low specific activity material and surface contaminated objects in 10CFR71.14(b)(3)(i).

As shown in Table 4.2, the Maintenance, Fabrication, and Periodic leakage tests may be performed using R-134a, or helium as the tracer gas. The acceptance criterion for these tests is the reference air leakage rate, L_R, which is calculated in Section 4.4. An equivalent maximum permissible leakage rate to L_R has been calculated in Sections 4.5 and 4.6 for R-134a and He, respectively, adjusting for individual properties for the gas plus the test pressure and temperature. The equivalent leakage becomes the acceptance criteria for the particular gas being used to perform the test.

The Fabrication leakage tests are performed on the entire containment boundary including the closure lid, the vent port, the cask inner shell and base plate, and associated weldings. The procedure for performing the leakage tests is described in Section 8.1.4.

The Maintenance and Periodic leakage tests are performed on the closure lid and the vent port. The detailed procedure for performing these tests is given in 8.2.2.1, but generally they will be conducted as follows:

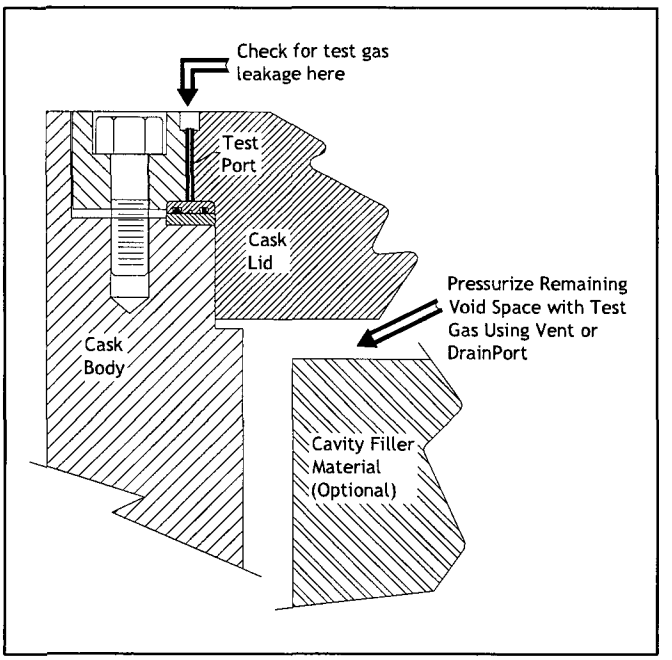

Fig. 4.8 - Periodic Leak Test of Closure Lid

- Pressurize the void space in the cavity with a test gas using the vent port in the lid. Some of the volume of the cavity may be temporarily filled to reduce the volume of test gas required to conduct the test.
- Check for leaks of the inner (containment boundary) O-ring using the test port in the lid.

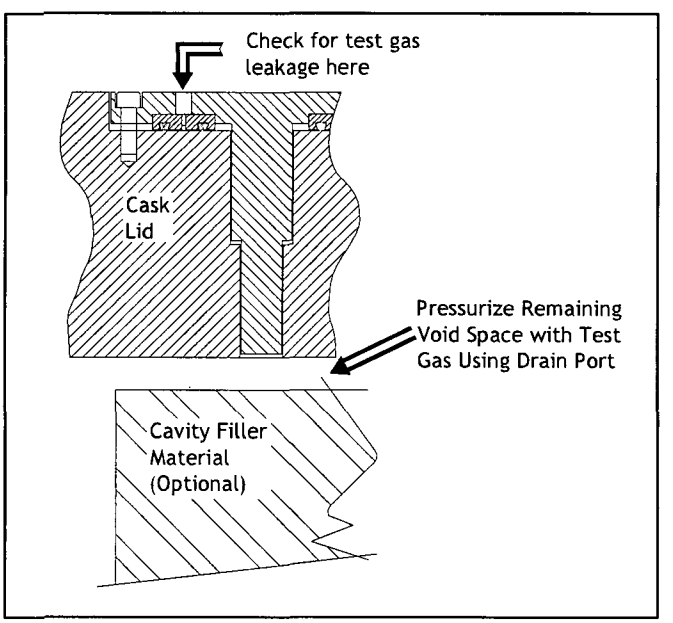

Fig. 4.9 - Periodic Leak Test of Vent Port

- Pressurize the void space in the cavity with a test gas using the drain port. Some of the volume of the cavity may be temporarily filled to reduce the volume of test gas required to conduct the test.
- Check for leaks of the inner (containment boundary) vent port cover plate O-ring

4.9 Periodic Verification Leak Rate Determination for Leaktight Status

4.9.1 Introduction

The purpose of this section is to describe the method for performing a periodic leak test to demonstrate meeting the leaktight criterion per ANSI N14.5-1997. This test method is only applicable to a 8-120B cask with butyl rubber o-rings and ethylene propylene seals.

4.9.2 Test Conditions

The test is performed with a mass spectrometer leak detector. The test is conducted on the 8-120B by evacuating the cask cavity to at least 90% vacuum then pressurizing the cask cavity with helium (+1 psig, -0 psig). The annulus between the o-rings is evacuated until the vacuum is sufficient to operate the helium mass spectrometer leak detector and the helium concentration in the annulus is monitored. The acceptance criterion is 1.0×10^{-7} atm-cm^3/sec of air (leaktight). The detector sensitivity must be less than or equal to 5.0×10^{-8} atm-cm^3/sec. Similar tests are performed on the vent port.

4.10 References

4.1 American National Standard for Leakage Tests on Packages for Shipment of Radioactive Materials, American National Standards Institute, Inc., New York, ANSI N14.5-1997, 1997.

4.2 8-120B Drawing, C-002-12CV01-001, Energy*Solutions*, 2010

4.3 Containment Analysis for Type B Packages Used to Transport Various Contents, LLNL, NUREG/CR-6487, 1996

Appendix 4.1

Properties of R-134a

Technical Information

P134a

DuPont™ Suva®
refrigerants

DuPont HFC-134a

Properties, Uses, Storage, and Handling

DuPont™ Suva® 134a refrigerant
DuPont™ Suva® 134a (Auto) refrigerant
DuPont™ Formacel® Z-4 foam expansion agent
DuPont™ Dymel® 134a aerosol propellant

DUPONT®

The miracles of science™

Physical Properties of HFC-134a

Physical Properties	Unit	HFC-134a
Chemical Name		Ethane, 1,1,1,2-Tetrafluoro
Chemical Formula		CH_2FCF_3
Molecular Weight	—	102.03
Boiling Point at 1 atm (101.3 kPa or 1.013 bar)	°C °F	–26.1 –14.9
Freezing Point	°C °F	–103.3 –153.9
Critical Temperature	°C °F	101.1 213.9
Critical Pressure	kPa lb/in² abs	4060 588.9
Critical Volume	m³/kg ft³/lb	1.94×10^{-3} 0.031
Critical Density	kg/m³ lb/ft³	515.3 32.17
Density (Liquid) at 25°C (77°F)	kg/m³ lb/ft³	1206 75.28
Density (Saturated Vapor) at Boiling Point	kg/m³ lb/ft³	5.25 0.328
Heat Capacity (Liquid) at 25°C (77°F)	kJ/kg·K or Btu/(lb) (°F)	1.44 0.339
Heat Capacity (Vapor at Constant Pressure) at 25°C (77°F) and 1 atm (101.3 kPa or 1.013 bar)	kJ/kg·K or Btu/(lb) (°F)	0.852 0.204
Vapor Pressure at 25°C (77°F)	kPa bar psia	666.1 6.661 96.61
Heat of Vaporization at Boiling Point	kJ/kg Btu/lb	217.2 93.4
Thermal Conductivity at 25°C (77°F) Liquid	W/m·K Btu/hr·ft°F	0.0824 0.0478
Vapor at 1 atm (101.3 kPa or 1.013 bar)	W/m·K Btu/hr·ft°F	0.0145 0.00836
Viscosity at 25°C (77°F) Liquid Vapor at 1 atm (101.3 kPa or 1.013 bar)	 mPa·S (cP) mPa·S (cP)	 0.202 0.012
Solubility of HFC-134a in Water at 25°C (77°F) and 1 atm (101.3 kPa or 1.013 bar)	wt%	0.15
Solubility of Water in HFC-134a at 25°C (77°F)	wt%	0.11
Flammability Limits in Air at 1 atm (101.3 kPa or 1.013 bar)	vol %	None
Autoignition Temperature	°C °F	770 1,418
Ozone Depletion Potential	—	0
Halocarbon Global Warming Potential (HGWP) (For CFC-11, HGWP = 1)		0.28
Global Warming Potential (GWP) (100 yr ITH. For CO_2, GWP = 1)		1,200
TSCA Inventory Status	—	Reported/Included
Toxicity AEL* (8- and 12-hr TWA)	ppm (v/v)	1,000

* AEL (Acceptable Exposure Limit) is an airborne inhalation exposure limit established by DuPont that specifies time-weighted average concentrations to which nearly all workers may be repeatedly exposed without adverse effects.

Note: kPa is absolute pressure.

SUVA®

REFRIGERANTS

PART II

PRODUCT INFORMATION

Transport Properties of SUVA® Refrigerants:

SUVA® 134a
SUVA® 123

Viscosity
Thermal Conductivity
and
Heat Capacity
for the
Liquid and Vapor

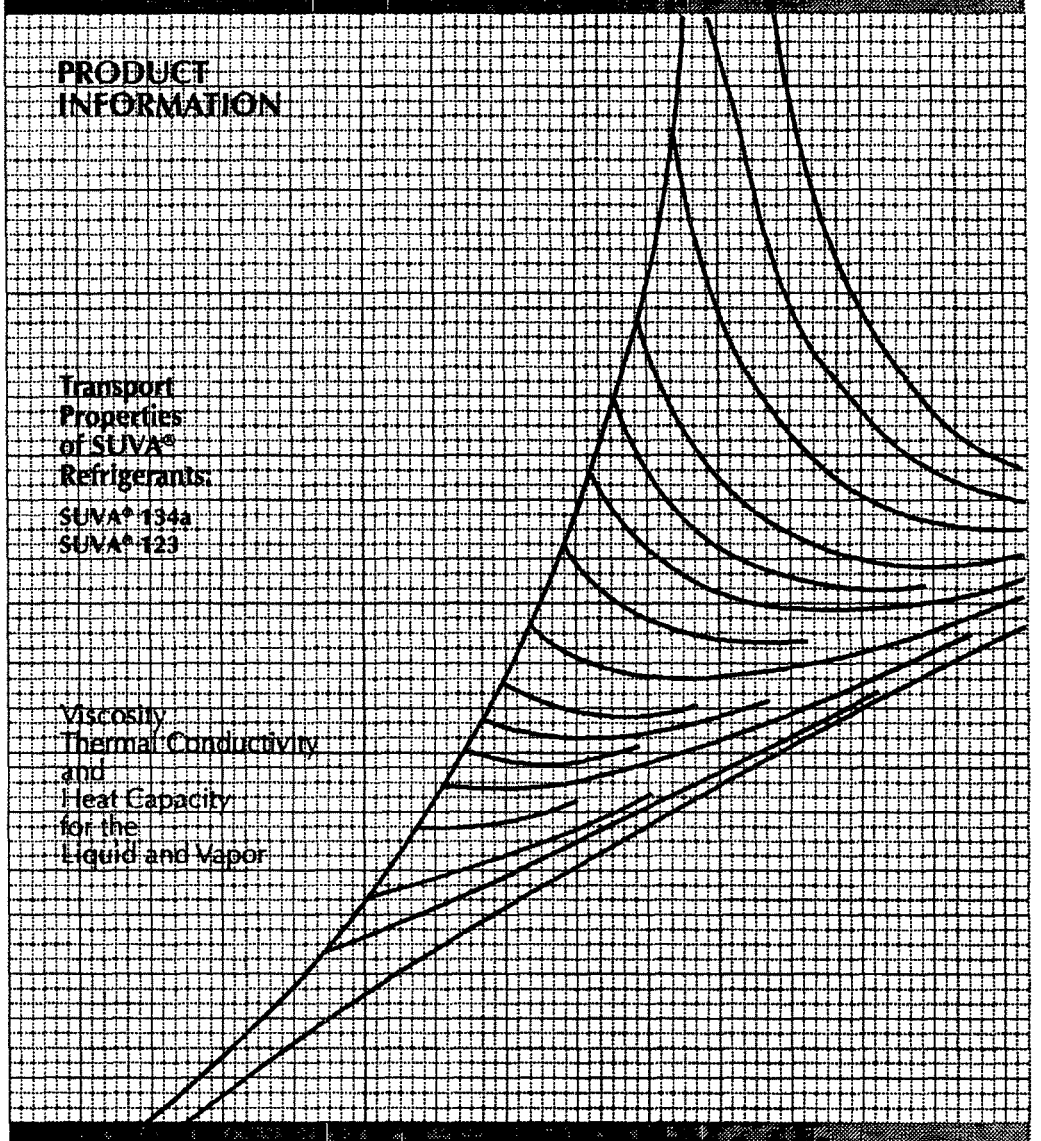

DUPONT

Vapor Viscosity at Atmospheric Pressure

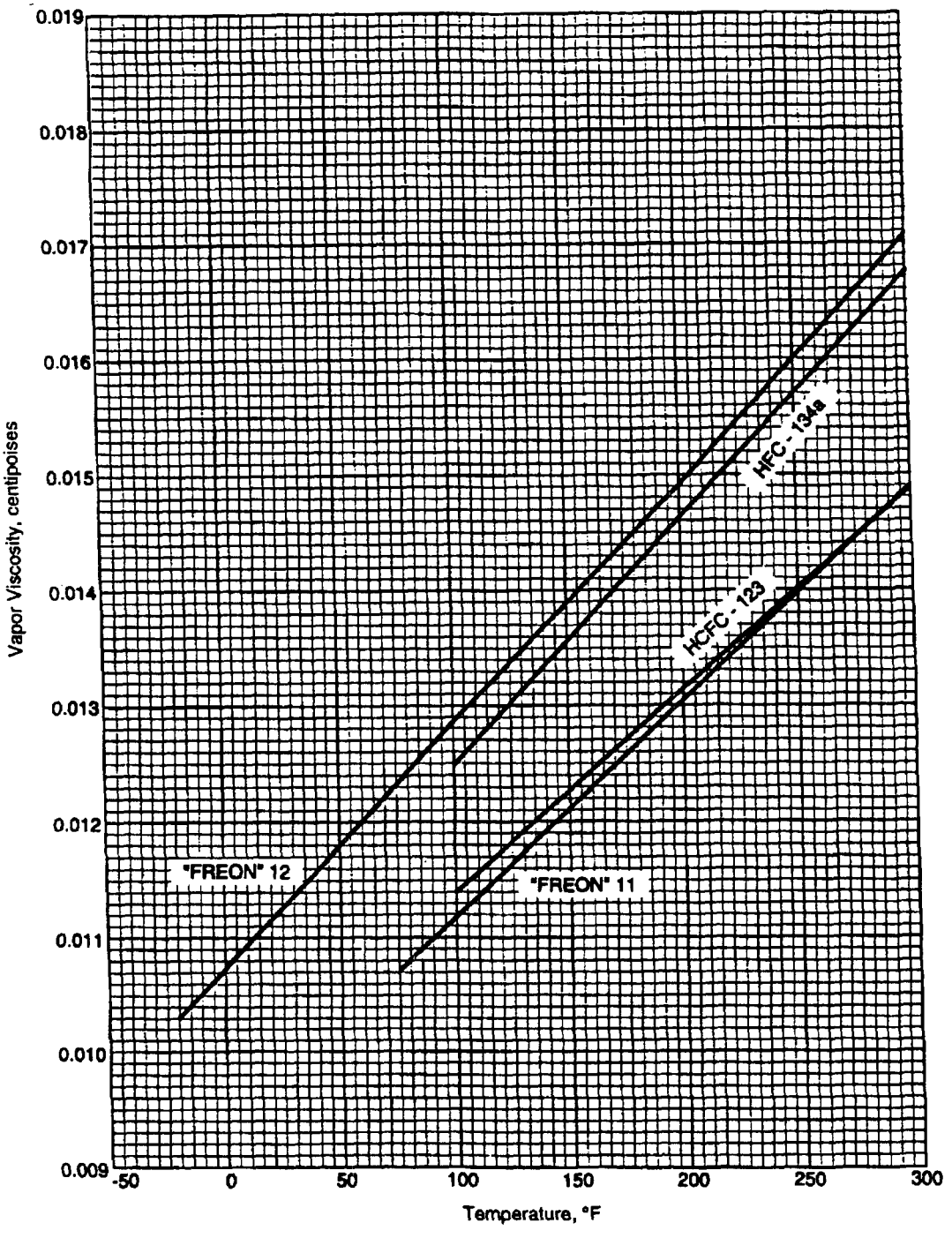

5.0 SHIELDING EVALUATION

5.1 Description of Shielding Design

The Model 8-120B packaging consists of a lead and steel containment vessel which provides the necessary shielding for the various radioactive materials to be shipped within the package. (Refer to Section 1.2.3 for packaging contents.) Tests and analysis performed under chapters 2.0 and 3.0 have demonstrated the ability of the containment vessel to maintain its shielding integrity under normal conditions of transport. Prior to each shipment, radiation readings will be taken based on individual loadings to assure compliance with applicable regulations as determined in 10CFR71.47 (see Section 7.1, step 13c).

The 8-120B will be operated under "exclusive use" such that the contents in the cask will not create a dose rate exceeding 200 mrem/hr on the cask surface, or 10 mrem/hr at two meters from the outer lateral surfaces of the vehicle. The package shielding must be sufficient to satisfy the dose rate limit of 10CFR71.51(a) (2) which states that any shielding loss resulting from the hypothetical accident will not increase the external dose rate to more than 1000 mrem/hr at one meter from the external surface of the cask.

5.1.1 Shielding Design Features

The cask side wall consists of an outer 1.5 inch thick steel shell surrounding 3.35 inches of lead and an inner containment shell wall of 0.75 inch thick steel. Total material shield thickness is 2.25 inches of steel and 3.35 inches of lead.

The primary cask lid consists of two layers of 3.25 inch thick steel, giving a total material shield thickness of 6.5 inches of steel. This lid closure is made in a stepped configuration to eliminate radiation streaming at the lid/cask body interface.

A secondary lid is located at the center of the main lid, covering a 29.0 inch opening. The secondary lid is constructed of two 3.25 inch steel plates with multiple steps machined in the secondary lid. These match steps in the primary lid, eliminating radiation streaming pathways.

5.1.2 Maximum Radiation Levels

Table 5.1 gives both normal and accident condition dose rates for the maximum activity Co-60 and Cs-137 source in the cask.

Table 5.1 - Summary of Maximum Dose Rates (mrem/hr)

TABLE WITHHELD UNDER 10 CFR 2.390

The following assumptions were used to develop the values given in the table.

5.1.2.1 **Normal Conditions**

The source is modeled as a point source (diameter=1 cm, height=1 cm) at the geometric center of the cask cavity.

5.1.2.2 **Accident Conditions**

(1) Lead slump resulting from the accident drop analysis gives dose rates that bound those from the other accident tests

(2) The source is modeled as a point source in contact with the inner shell and in contact with the lid at a location nearest to the region of lead slump. This geometry conservatively evaluates the dose rate for the HAC scenario, since this source location will give the maximum dose rate.

5.1.2.2 **Conclusion**

For the Co-60 point source case, the maximum allowable payload gamma source strength is governed by the 1000 mrem/hr dose rate limit that applies on the vertical plane one meter from the cask body side, under HAC. The results determine a maximum allowable source strength of 2.58×10^{12} gammas/sec (34.9 Ci) for that isotope. At this source strength, the results show a dose rate of exactly 1000 mrem/hr on the HAC one meter side plane, and dose rates that are well under their regulatory limits at all other locations.

For the Cs-137 point source case, the maximum allowable payload gamma source strength is also governed by the 1000 mrem/hr dose

rate limit that applies on the vertical surface one meter from the cask body side, under HAC. The results determine a maximum allowable source strength of 1.12 x 10^{13} gammas/sec (365.1 Ci) for that isotope. At this source strength, the results show a dose rate of exactly 1000 mrem/hr on the HAC one meter side plane, and dose rates that are well under their regulatory limits at all other locations.

As the results do not exceed the allowable dose rates, the 8-120B cask meets the shielding requirements of 10 CFR Part 71.

5.2 Source Specification

5.2.1 Gamma Source

A unit (1.0 gamma/sec) point source is placed in the cask. For NCT, the source is placed at the cask center. For HAC, the source is placed at the top outside corner of the cask cavity (directly across from the gap at the top of the lead). The dose rate from the unit source is determined at the cask outer surface, at 2m from the 8' wide trailer, and at 1m from the cask surface. The ratio between the dose limit and the calculated value is determined. The maximum source is set equal to the activity of the unit source times the smallest ratio of the limit to the calculated dose rate from the unit source. This maximum source is the largest activity source that meets both the NCT and HAC dose limits. Two gamma sources are evaluated, Co-60 and Cs-137. The photon energy and abundance of the sources are shown in Table 5.2.

Table 5.2 – Photon Energy and Abundance

Radionuclide	**Photon Energy**	**Abundance**
	MeV	**# of Gamma/decay**
^{60}Co	1.176	1
	1.333	1
^{137}Cs	0.662	0.85

For point sources, the maximum allowable 8-120B cask gamma source strength is 2.58 x 10^{12} gammas/sec (34.9 Ci) for Co-60, and 1.12 x 10^{13} gammas/sec (365.1 Ci) for Cs-137.

5.2.2 Neutron Source

There are no significant sources of neutron radiation in the radioactive materials carried in the CNS 8-120B cask that result in measureable neutron doses outside the cask.

5.3 Model Specification

5.3.1 Description of Radial and Axial Shielding Configuration

Normal Conditions of Transport (NCT)
The walls of the 8-120B cask, 0.75" inner and 1.5" outer steel walls, with a 3.35" lead layer between, are modeled as cylindrical shells around the cavity cylinder. The base and lid of the cask are two 3.25" steel plates, for a total thickness of 6.5". This geometry is shown in Figure 5.1; the impact limiters are not shown. The cask is transported upright, i.e., with the axis of the cylinder vertical. Doses are evaluated at contact with the cask sidewall, the impact limiter surface, and at 2m from the 8' wide trailer.

Figure 5.1 Cask Model

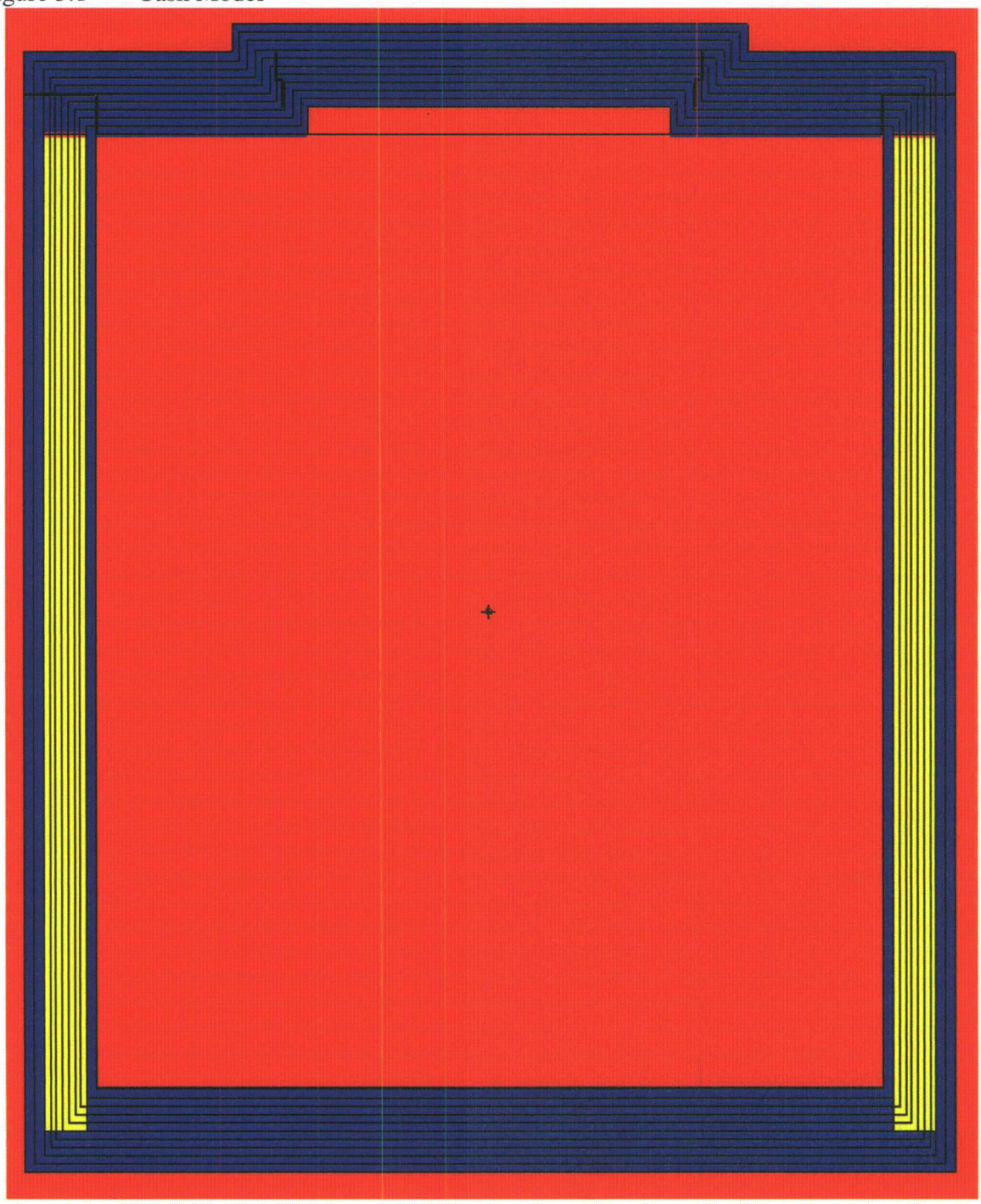

Hypothetical Accident Conditions (HAC)
As discussed in Chapter 2, the hypothetical accident 30' drop results in a 0.15" lead slump and the puncture drop causes a local ½" thinning of the lead layer. The impact limiters are conservatively ignored. The HAC model is shown in Figure 5.2. Doses are determined at 1 m from the sidewall and the lid.

Figure 5.2 – HAC Cask Model

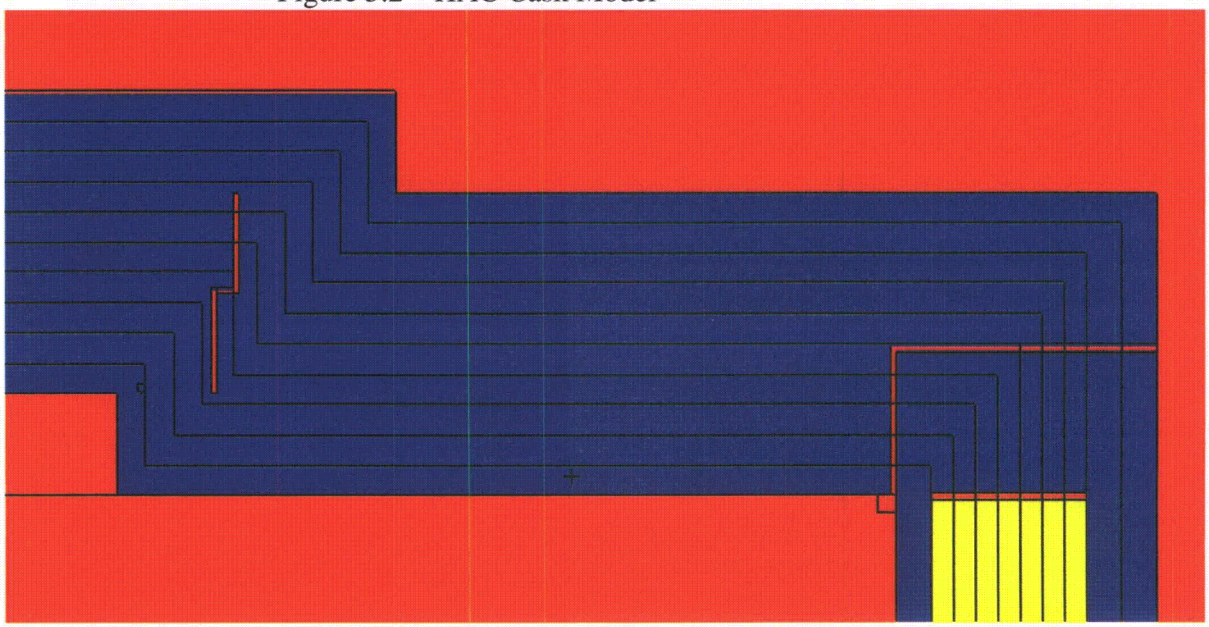

See Reference 5.7.2 for additional details of the MCNP models.

5.3.2 Material Properties

The compositions and densities of the materials modeled in the shielding analyses are described in Table 5.3 below. The table also lists the MCNP material/cross-section identifier (ZAID) for each modeled material. The density of air is taken from Input #3.are shown in below.

Table 5.3 – Material Composition and Density

Material	Total Density (g/cc)	Composition	MCNP ZAID
Carbon Steel	7.82	99% Fe 1% C	26000.04p 8000.04p
Lead	11.34	100% Pb	82000.04p
Air	0.001205	76.508% N 23.479% O 0.013% C	7000.04p 8000.04p 6000.04p

5.4 Shielding Evaluation

5.4.1 Methods

The gamma dose rates were calculated using MCNP Version 5, rev. 1.51, using the source described in Section 5.2 and the geometry described in Section 5.3. For the normal condition of transport (NCT) cases, dose rates are tallied on the vertical surface two meters from the package/transporter side (i.e., 322 cm from the cask centerline), on the package surface which includes the impact limiter side and end surfaces (as well as an equal radius cylindrical surface that extends between them)

and on the cask body side and end surfaces. For the HAC case, the dose rates are tallied at two locations on the surface one meter from the cask body. One location lies on the radial one meter surface, directly across from the source point (viewing the source point through the lead slump gap. The second location lies on the top one meter surface, directly above the source point, viewing the source point through the gap between the radial cask body and the lower part of the primary cask lid.

5.4.2 Input and Output Data

The MCNP input and output files are found in Reference 5.7.3. The input file lists the inputs that define the source dimensions, shield dimensions, materials and density, and source spectrum.

5.4.3 Flux-to-Dose-Rate Conversion

The flux to exposure rate conversion factors are listed in Table 5.4 (Ref. 5.7.1).

Table 5.4 Gamma-Ray-Flux-To-Dose-Rate Conversion Factors (ANSI/ANS-1977)

Gamma Energy (MeV)	DCV (rem/hr) per (γ/cm^2-sec)
0.015	1.95E-06
0.025	8.01E-07
0.045	3.17E-07
0.08	2.61E-07
0.15	3.79E-07
0.30	7.59E-07
0.50	1.15E-06
0.65	1.44E-06
0.75	1.60E-06
0.90	1.83E-06
1.25	2.32E-06
1.75	2.93E-06
2.5	3.72E-06
3.5	4.63E-06
4.5	5.42E-06
5.5	6.19E-06
6.5	6.93E-06
7.5	7.66E-06
9.0	8.77E-06
12.0	1.10E-05

5.4.4 External Radiation Levels

The results for the Co-60 and Cs-137 point source NCT and HAC cases are presented in the tables below. These analyses model a unit (1.0 gamma/sec) point source in the center of the cask cavity. The Co-60 gamma source consist of 50% 1.176 MeV gammas and 50% 1.333 MeV gammas. The Cs-137 source is 100% 0.662 MeV gammas.

Dose rates are calculated over the cask exterior surfaces for which 10CFR71 dose rate limits apply, as well as other locations (for informational purposes). The peak dose rate calculated on each defined surface is presented in the table, along with its location on the surface. The HAC case dose rates are shown in the last two rows of the table (all other rows present NCT results). For HAC, the peak dose rates seen on the planes one meter from the cask body side and top surfaces are presented. The peak dose rate calculated one meter above the cask top will bound the peak dose rates one meter from the cask bottom (due to the presence of the cask body/lid gap). The peak dose rates in the vicinity of the lead slump bound the dose rates resulting from the puncture drop damage.

The per-source-gamma MCNP-output dose rates (presented in the 2nd table column) are then all scaled up by the largest cask source strength that would still yield peak dose rates that meet the regulatory limits at all cask exterior locations. The calculation of this source strength (or scaling factor) is shown below in Tables 5.5a and 5.5b, for the Co-60 and Cs-137 cases, respectively. The scaled dose rates are then presented, for each location, in the table. In the following column, the 10CFR71 dose rate limit (if any) that applies for each surface (or location) is also listed.

The last three columns of the table present information about where the dose rate result can be found in the MCNP output files. The name of the MCNP output file is given, along with the Tally number and Tally segment where the peak dose rate listed in the table is presented.

Table 5.5a Co-60 Point Source NCT and HAC Cask Dose Rates

Location	Unit Source Peak Dose Rate (mrem/hr)	MCNP Relative Error	Peak Dose Rate Tally Segmt Location*	Scaled Dose Rate (mrem/hr)	10CFR71 Dose Rate Limit (mrem/hr)	MCNP Output File Name	MCNP Output Tally No.	Peak Dose Tally Segmt. #
Side 2 meter plane	2.95E-12	0.0039	Z = 0-10 cm	7.6	10	Co60-NCTo	f2	2
Top impact limiter top surface	4.35E-11	0.0152	R = 10-15 cm	112.2	200	Co60-NCTo	f22	2
Bottom impact limiter bottom surface	4.73E-11	0.0051	R = 0-10 cm	122.0	200	Co60-NCTo	f32	1
Package side surface**	4.41E-11	0.0037	Z = 0-10 cm	113.8	200	Co60-NCTo	f42	2
Cask body bottom surface	1.12E-10	0.0072	R = 0-10 cm	289.0	NA	Co60-NCTo	f52	1
Cask lower (primary) lid top surface	5.59E-11	0.0120	R = 51-55 cm	144.2	NA	Co60-NCTo	f62	2
Cask upper (secondary) lid top surf.	1.00E-10	0.0239	R = 0-10 cm	258.0	NA	Co60-NCTo	f72	1
Primary Lid Seal	1.04E-09	0.0139	Seal Location	2,683	N/A	Co60-NCTo	f82	2
Secondary Lid Seal	7.83E-09	0.0267	Seal Location	20,201	N/A	Co60-NCTo	f4	N/A
One meter from cask body side (HAC)	3.88E-10	0.0243	Z= 90-100 cm	1,000	1000	Co60-HACo	f2	1
One meter from cask body top (HAC)	2.11E-10	0.0125	R = 73-83 cm	544.4	1000	Co60-HACo	f12	1

*Z=0 corresponds to the elevation of the cask midplane (and the point source). R=0 corresponds to the cask centerline.
** Includes both the cask body side (radial) surface and the impact limiter radial surfaces

$$\text{Scaling Factor} = \frac{1000}{3.88\text{E-}10} = 2.58\text{E+}12$$

Table 5.5b Cs-137 Point Source NCT and HAC Cask Dose Rates

Location	Unit Source Peak Dose Rate (mrem/hr)	MCNP Relative Error	Peak Dose Rate Tally Segmt Location*	Scaled Dose Rate (mrem/hr)	10CFR71 Dose Rate Limit (mrem/hr)	MCNP Output File Name	MCNP Output Tally No.	Peak Dose Tally Seg #
Side 2 meter plane	3.49E-14	0.0109	Z = 290-300 cm	0.4	10	Cs137-NCT-Sideo	f2	31
Top impact limiter top surface	3.49E-12	0.0068	R = 0-10 cm	39.1	200	Cs137-NCT-endso	f2	1
Bottom impact limiter bottom surface	3.86E-12	0.0022	R = 0-10 cm	43.2	200	Cs137-NCT-endso	f12	1
Package side surface**	2.99E-13	0.0101	Z = 90-100 cm	3.3	200	Cs137-NCT-Sideo	f22	11
Cask body bottom surface	9.21E-12	0.0025	R = 0-10 cm	103.2	NA	Cs137-NCT-endso	f22	1
Cask lower (primary) lid top surface	4.05E-12	0.0050	R = 51-55 cm	45.4	NA	Cs137-NCT-endso	f32	2
Cask upper (secondary) lid top surf.	8.43E-12	0.0084	R = 0-10 cm	94.4	NA	Cs137-NCT-endso	f42	1
Primary Lid Seal	2.64E-10	0.0040	Seal Location	2,957	N/A	Cs137-NCT-endso	f52	2
Secondary Lid Seal	3.75E-09	0.0062	Seal Location	42,000	N/A	Cs137-NCT-endso	f4	N/A
One meter from cask body side (HAC)	8.91E-11	0.0243	Z = 90-100 cm	1,000	1000	Cs137-HACo	f2	1
One meter from cask body top (HAC)	2.91E-11	0.0115	R = 73-83 cm	326.2	1000	Cs137-HACo	f12	1

*Z=0 corresponds to the elevation of the cask midplane (and the point source). R=0 corresponds to the cask centerline.
**Includes both the cask body side (radial) surface and the impact limiter radial surfaces.

$$\text{Scaling Factor} = \frac{1000}{8.91\text{E-}11} = 1.12\text{E+}13$$

5.5 Activity Limits

5.5.1 Gamma Activity Limits

Using the cask model described in 5.3, a sensitivity analysis was performed to determine the maximum activity that can be contained in the 8-120B and meet the dose rate limits of 10 CFR 71.47 and 71.51.

The maximum allowable cask gamma source strength (in gammas.sec) is calculated as a function of gamma energy (see Ref. 5.7.2 for detailed discussion of the sensitivity analysis). Two source configurations were modeled, a point source, centered within the cask cavity for NCT, a point source in the top corner of the cask cavity for HAC, and an evenly distributed gamma source with a cask cavity payload density of 1.0 g/cc. For each case, and for each gamma energy level, the gamma source strength that would yield the maximum allowable dose rate is calculated for the 2-meter side plane, the top impact limiter top surface, and the HAC one meter plane for the point source case. The lowest source strength is then established as the maximum allowable source strength. The maximum allowable source strengths are presented graphically, as a function of gamma energy, for the point and unit density cases in Figure 5-3.

5.5.2 Beta Activity Limits

Beta particles lose their energy continuously as they pass through matter, emitting Bremsstrahlung photons over their range. These Bremsstrahlung photons, however, have the potential to be significant contributors to package dose rates because the allowable (3000 A_2) source activity for betas can be much higher than for gamma emitters (e.g., as much as 42,000 Ci of 32P vs. 4144 Ci of 137Cs). The method for qualifying significant 8-120B beta emitters is to represent the beta emitter as an equivalent photon emitter and treat it like any other photon energy line per the methods described in 5.5. Since the equivalent photon activity is less than 1% of the beta activity, this method is only applied to beta sources with activities greater than 10 times the most restrictive gamma source limit or 2E+12 betas per second. See Ref. 5.7.2 for additional details and validating calculations.

The beta source can be converted to an equivalent photon source by:

$$S_\lambda = S_\beta \cdot \frac{S_\lambda}{S_\beta} \text{ where}$$

S_γ = equivalent monoenergetic gamma source, γ/sec, at the maximum beta energy E_{max}.

S_β = beta source, β/sec, at the beta energy spectrum for the nuclide of interest

and

$$\frac{S_\lambda}{S_\beta} = (\textit{fraction of energy converted from betas to photons})\left(\frac{\textit{beta } E_{avg}}{\textit{photon energy}}\right)$$

Conservatively assume all photons are at the beta maximum energy E_{max}, the energy ratio becomes:

$$\frac{S_\lambda}{S_\beta} = f\left(\frac{E_{avg}}{E_{\max}}\right)$$

where

E_{avg} = average energy of the beta source distribution, MeV

E_{max} = maximum energy of the source distribution, MeV.

The fraction of the incident beta energy that is converted to photon energy, f, is given by (Ref. 5.7.4)

$$f \cong 3.5 \times 10^{-4} ZE_{\max}$$

where

f = the fraction of the incident beta energy that is converted to photon energy,

Z = atomic number of the absorber

So

$$\frac{S_\lambda}{S_\beta} = 3.5\times10^{-4} ZE_{\max}\left(\frac{E_{avg}}{E_{\max}}\right)$$

The resulting equation to convert a beta source to an equivalent photon source at the beta's maximum energy is therefore:

$$S_\lambda = S_\beta\left(3.5\times10^{-4} ZE_{avg}\right)$$

For iron absorber (i.e., the inner surface of the cask cavity, or metallic contents), Z=26, and the equation simplifies to $f \cong 9.1\times10^{-3} E_{avg}$. This is conservative for lower Z absorbers (resins, etc.). If the contents are higher Z, then the first equation should be used with an appropriate Z.

The proposed method for qualifying significant 8-120B beta emitters is to represent the beta emitter as an equivalent photon emitter and treat it like any other photon energy line per the methods described in the remainder of this calculation. In this way, significant beta emitters can be accounted for along with other gamma emitters. The procedure is as follows:

- look up the beta E_{avg} and E_{max},
- Calculate the equivalent gamma source, S_β x9.1E-03 x $E_{\beta avg}$
- look up the allowable 8-120B photon source term at E_{max}
  (this very conservatively assumes all Bremsstrahlung energy is emitted at the beta E_{max}),
- divide the allowable source by the equivalent gamma source.
- If the result is less than 1, the content is acceptable.

This procedure is included in Chapter 7 Attachment 1 for establishing limits for large activity beta sources.

Figure 5-3 - Maximum Activity for Point and Unit Payload Density Distributed Sources

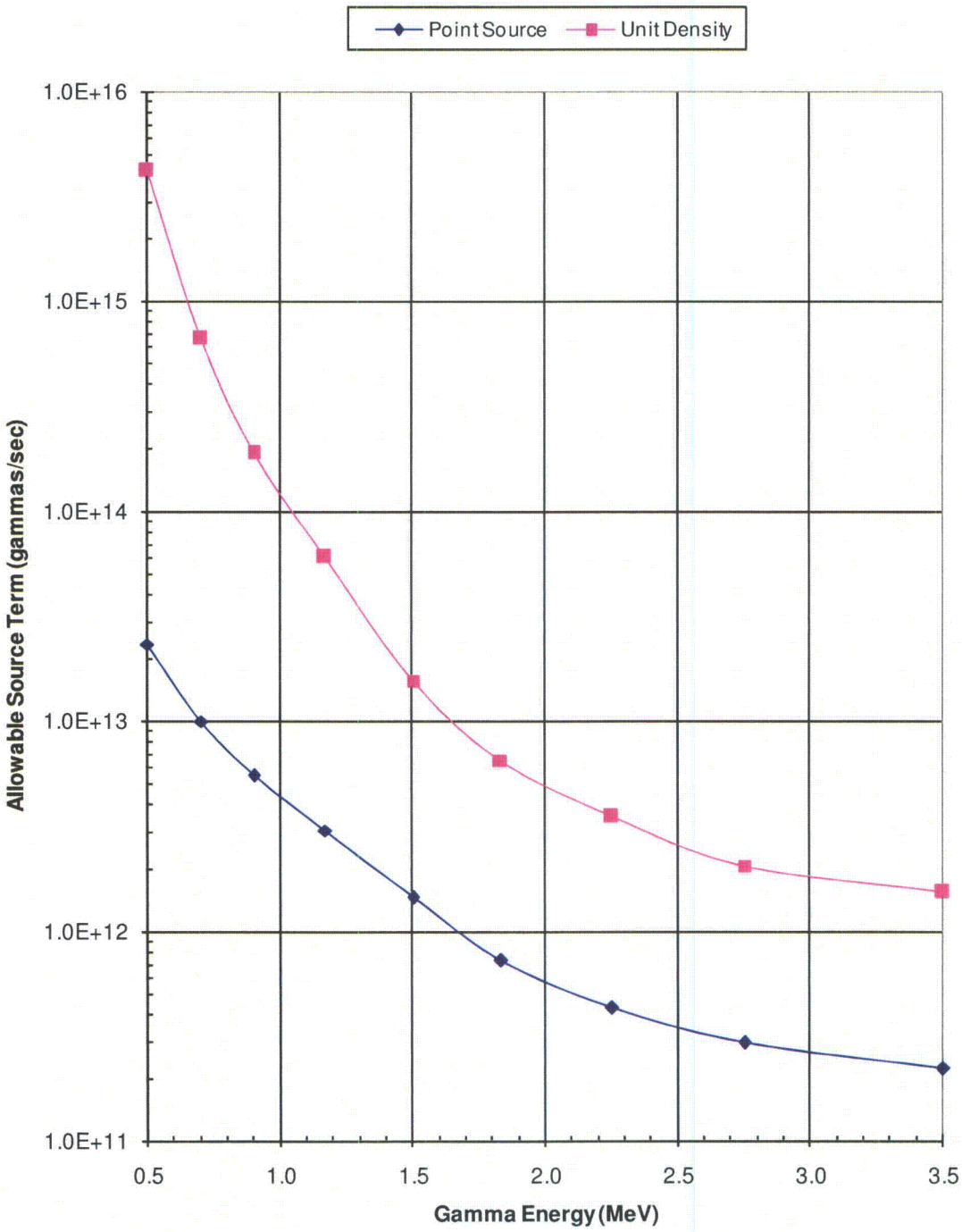

Similar calculations are performed for the other six distributed source, payload density cases. The maximum allowable source strength results for the other six density values are compared to that calculated for the unit density (1.0 g/cc) case, for each gamma energy level. The result is a payload density correction factor (to the allowable source strength) that is plotted as a function of gamma energy level and payload density. For the 3.5 MeV energy group, the calculation was done for an

aluminum payload, since that was more conservative in that energy group. All allowable sources were reduced by a margin of 5% for conservatism. The results of these analyses are presented in Figure 5-4.

Figure 5-4 - Density Correction Factor vs. Gamma Energy & Payload Density

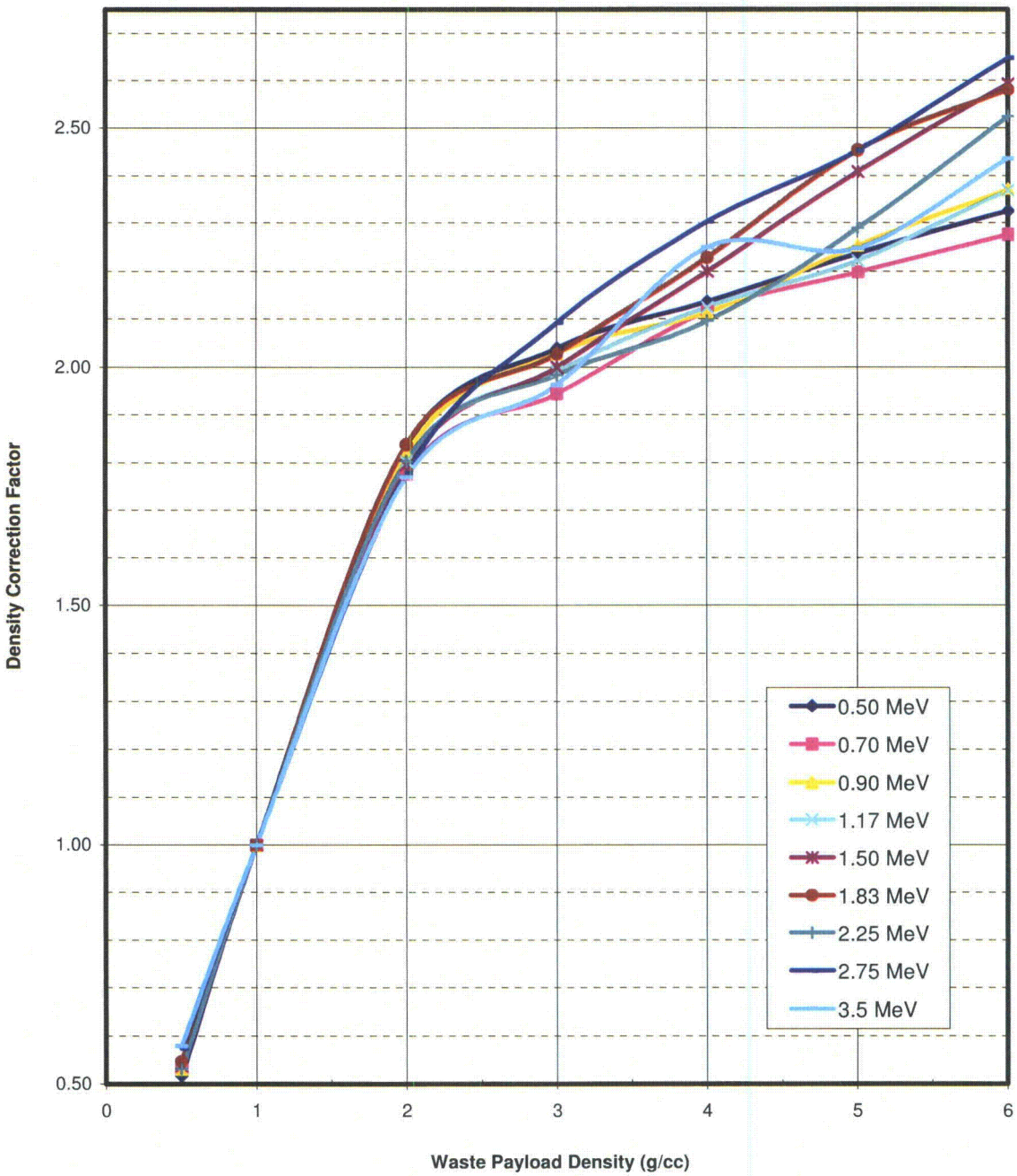

The maximum activity plot and the DCF, if applicable, are used to determine the maximum activity for any contents. A procedure for determining the maximum activity is provided in Chapter 7.

5.6 Conclusion

The cask shielding must be able to limit the dose rate to the limits of 10 CFR 71.47 and 71.51. This section demonstrates compliance with this requirement. Structural analysis (Section 2.0) demonstrates that the cask wall will not fail during the hypothetical accident. However, lead slump may occur during a drop giving an isolated region in the sidewall without lead. Lead slump cannot occur in the lid or bottom of the cask since lead is not present in these parts of the cask. With application of the gamma activity limits from Section 5.5, the contents will meet the dose rate limits.

5.7 References

5.7.1 ANSI/ANS 6.1.1-1977, "Neutron and Gamma-Ray Flux-to-Dose-Rate Factors."
5.7.2 ES Calculation, NU-391 Rev. 1, "8-120B Shielding Response"
5.7.3 MCNP Input and Output files
5.7.4 Cember, H., "Introduction to Health Physics," Pergamon Press, 2nd Ed.

6.0 CRITICALITY EVALUATION

Not applicable to the 8-120B package.

7.0 OPERATING PROCEDURE

This chapter describes the general procedure for loading and unloading of the 8-120B Cask.

The maximum permissible activity, for gamma emitting radionuclides, is the maximum activity in gammas/sec, determined per Attachment 1. For other radionuclide contents, the maximum activity is that which meets the decay heat limit of 200 watts and the A_2 limit of 3000. Radioactive contents are to be transported as exclusive use, per 10 CFR 71.4.

For contents that could radiolytically generate combustible hydrogen, see Attachment 2 for instructions on determination of hydrogen concentration.

Powdered solids shipments require the cask to be leaktight. The most recent periodic leak test must meet the requirements of Chapter 4, Section 4.9, Periodic Verification Leak Rate Determination for Leaktight Status.

7.1 Loading the Packaging

<u>Note:</u> Prior to loosening the impact limiter ratchet binders, inspect the exterior of the cask for damage, e.g., large dents, gouges, tears to the impact limiter skin and thermal shield. Contact EnergySolutions if damage is present.

7.1.1 Loosen and disconnect ratchet binders from upper impact limiter.

7.1.2 Using suitable lifting equipment, remove upper impact limiter assembly. Care should be exercised to prevent damage to impact limiter during handling and storage.

7.1.3 Determine if cask must be removed from trailer for loading purposes. To remove cask from trailer:

7.1.3.1 Disconnect cask to trailer tie-down equipment.

7.1.3.1.1 Inspect cask lifting ear bolts for defects. Obtain replacement bolts as specified on the drawing listed in 5(a)(3) of the CoC for any bolts that show cracking or other visual signs of distress.

7.1.3.1.2 Inspect cask lifting ear threaded holes for defects. Contact Energy*Solutions* if any bolt holes show signs of cracking or visual signs of distress.

7.1.3.2 Attach cask lifting ears and torque bolts to 200 ft-lbs. ± 20 ft-lbs. lubricated.

NOTE: The cables used for lifting the cask must have a true angle, with respect to the horizontal of not less than 60°.

7.1.3.3 Using suitable lifting equipment, remove cask from trailer and the lower impact limiter and place cask in level loading position.

NOTE: The cables used for lifting the cask must have a true angle, with respect to the horizontal of not less than 60°.

NOTE: In certain circumstances, loading may be accomplished through the secondary lid, into a pre-positioned waste liner that has been properly shored or into pre-positioned shoring, while the primary lid remains on the cask. Alternate "(A)" steps have been included to accommodate this situation.

7.1.4 Loosen and remove the twenty (20) bolts, which secure the primary lid to cask body.

7.1.4A Loosen and remove the twelve (12) bolts, which secure the secondary lid to the primary lid.

7.1.5 Inspect the bolts for defects. Obtain replacement bolts as specified on the drawing listed in 5(a)(3) of the CoC for any bolts that show cracking or other visual signs of distress.

NOTE: The cables used for lifting either lid must have a true angle, with respect to the horizontal, of not less than 45°.

7.1.6 Remove primary lid from cask body using suitable lifting equipment. Care should be taken during lid handling operations to prevent damage to cask or lid seal surfaces.

7.1.6A Remove secondary lid from cask body using suitable lifting equipment. Care should be taken during lid handling operations to prevent damage to cask or lid seal surfaces.

7.1.7 Inspect the bolts holes for defects. Contact Energy*Solutions* for any bolt holes that show signs of cracking or visual signs of distress.

7.1.8 Inspect cask interior for damage, loose materials or moisture. Clean and inspect seal surfaces. Replace seals when defects or damage is noted which may preclude proper sealing. Contact EnergySolutions if damage is present.

NOTE: Radioactively contaminated liquids may be pumped out or removed by use of an absorbent material. Removal of any material from inside the cask shall be performed under the supervision of qualified health physics personnel with the necessary H.P. monitoring and radiological health safety precautions and safeguards.

NOTE: When seals are replaced, leak testing is required as specified in section 8.2.2.1.

NOTE: Verify intended contents meet the requirements of the Certificate of Compliance.

NOTE: Ensure the contents, secondary container, and packaging are chemically compatible, i.e., will not react to produce flammable gases.

7.1.9 Place disposable liner, drums or other containers into the pre-positioned shoring and install additional shoring or bracing, if necessary, to restrict movement of contents during normal transport.

7.1.9A Process liner as necessary, and cap using standard capping devices.

7.1.10 Clean and inspect lid seal surfaces.

7.1.11 Replace the primary lid on the cask body. Secure the lid by hand tightening the twenty (20) primary lid bolts.

7.1.11.1 Torque, using a star pattern, the twenty (20) primary lid bolts (lubricated) to 250 ft-lbs. ± 25 ft-lbs.

7.1.11.2 Re-Torque, using a star pattern, the twenty (20) primary lid bolts (lubricated) to 500 ft-lbs. ± 50 ft-lbs.

7.1.11A Replace the secondary lid on the primary lid. Secure the lid by hand tightening the twelve (12) secondary lid bolts.

7.1.11.1A Torque, using a star pattern, the twelve (12) secondary lid bolts (lubricated) to 250 ft-lbs. ± 25 ft-lbs.

7.1.11.2A Re-torque, using a star pattern, the twelve (12) secondary lid bolts (lubricated) to 500 ft-lbs. ± 5 0 ft-lbs.

7.1.12 Replace the vent port cap screw and seal (if removed) and torque to 20 ft-lbs. ± 2 ft-lbs.

NOTE: Leak test the primary lid and secondary lid O-rings and the vent port in accordance with Section 8.2.2.2, prior to shipment of the package loaded with greater than "Type A" quantities of radioactive material. For content exemptions of this test, refer to the current Certificate of Compliance No. 9168.

7.1.13 If cask has been removed from trailer, proceed as follows to return cask to trailer:

7.1.13.1 Using suitable lifting equipment, lift and position, cask into lower impact limiter on trailer in the same orientation as removed.

7.1.13.2 Unbolt and remove cask lifting ears.

7.1.13.3 Reconnect cask to trailer using tie-down equipment.

7.1.14 Using suitable lifting equipment, lift, inspect for damage, and install upper impact limiter assembly on cask in the same orientation as removed.

7.1.15 Attach and hand tighten ratchet binders between upper and lower impact limiter assemblies.

7.1.16 Cover lift lugs as required.

7.1.17 Inspect package for proper placards and labeling.

7.1.18 Complete required shipping documentation.

7.1.19 Prior to shipment of a loaded package, the following shall be confirmed:

7.1.19.1 That the licensee who expects to receive the package containing materials in excess of Type A quantities specified in 10 CFR 20.1906(a) meets and follows the requirements of 10 CFR 20.1906, as applicable.

7.1.19.2 That trailer placarding and cask labeling meet DOT specifications (49 CFR 172).

7.1.19.3 That the provisions of 10 CFR 71.87 are met including that the external radiation dose rates are less than or equal to 200 millirem per hour (mrem/hr) at the surface and less than or equal to 10 mrem/hr at 2 meters in accordance with 10 CFR 71.47. Perform sufficient surveys to ensure that a non-uniform distribution of radioactivity does not cause the surface or 2m limit to be exceeded.

The SAR thermal analysis demonstrates that by meeting the 200w decay heat limit, the temperature requirement of 10 CFR 71.43(g) is met. No temperature survey is required.

7.1.19.4 That all security seals are properly installed.

7.1.19.5 Prior to shipping a loaded package, inspect the exterior of the cask for damage, e.g., large dents, gouges, tears to the impact limiter skin and thermal shield. Contact Energy*Solutions* if damage is present.

7.2 Unloading the Package

In addition to the following sequence of events for unloading a package, packages containing quantities of radioactive material in excess of Type A quantities specified in 10 CFR 20.1906(a) shall be received, monitored, and handled by the licensee receiving the package in accordance with the requirements of 10 CFR 20.1906, as applicable. Identification of packages containing greater than Type A quantities can be made by review of the shipping papers accompanying the shipment.

7.2.1 Move the unopened package to an appropriate level unloading area.

7.2.2 Perform an external examination of the unopened package. Record any significant observations.

7.2.3 Remove security seal(s), as required.

7.2.4 Loosen and disconnect ratchet binders from the upper impact limiter assembly.

7.2.5 Remove upper impact limiter assembly using caution not to damage the cask or impact limiter assembly.

7.2.6 If cask must be removed from trailer, refer to Step 7.1.3.

7.2.7 Loosen and remove the twenty (20) primary lid bolts.

NOTE: The cables used for lifting the lid must have a true angle with respect to the horizontal of not less than 45 degrees.

7.2.8 Using suitable lifting equipment, lift lid from cask using care during handling operations to prevent damage to cask and lid seal surfaces.

7.2.9 Remove contents.

NOTE: Radioactively contaminated liquids may be pumped out or removed by use of an absorbent material. Removal of any material from inside the cask shall be performed under the supervision of qualified health physics personnel with the necessary H.P. monitoring and radiological health safety precautions and safeguards.

7.2.10 Assemble packaging in accordance with loading procedure (7.1.10 through 7.1.19).

7.3 Preparation of Empty Packaging for Transport

7.3.1 Confirm the cavity is empty of contents are far as practicable

7.3.2 Survey the interior; decontaminate the interior if the limits of 10 CFR 173.428(e) are exceeded

7.3.3 Install the lid.

7.3.3.1 Install the lid closure bolts.

7.3.3.2 Torque, using a star pattern, the twenty (20) primary lid bolts (lubricated) to 250 ft-lbs. ± 25 ft-lbs.

7.3.3.3 Re-Torque, using a star pattern, the twenty (20) primary lid bolts (lubricated) to 500 ft-lbs. ± 50 ft-lbs.

7.3.4 Re-install the vent port cap screw with the seal. Torque the vent port cap screw to 20±2 ft-lbs.

7.3.5 Decontaminate the exterior surfaces of the cask as necessary.

7.3.6 Inspect the exterior and confirm it is unimpaired.

7.3.7 Install the impact limiters.

7.3.8 Attach the tamper-indicating seals.

7.3.9 Confirm the requirements of 49 CFR 173.428 are met.

Attachment 1
Determination of Acceptable Activity
(see Chapter 5 for the derivation of the gamma activity limits)

1. Determine the total activity in the contents.
2. Determine if the content should be considered a distributed source or a point source. A distributed source is one that meets the definition of "essentially uniformly distributed" from NUREG-1608 and has a volume of at least 7.5 ft^3. Content that is not distributed shall be considered a point source. If the content is a distributed source, determine the density (ρ) of the content, in g/cm^3.
3. For contents that include beta sources with activities (A_β) above 2E+12 betas/sec, convert the beta source to an equivalent gamma source. The equivalent gamma activity, A_γ, equals A_β x9.1E-03 x $E_{\beta avg}$ in photons per sec. The photon energy equals the max β energy. Include the result in the photon source determined per Step 4.
4. Calculate the total gamma/sec for the contents by photon energy. Determine the photons per second for each photon energy, ignoring photon energies below 0.3 MeV. If any photons have energies above 3.5 MeV, the material is unacceptable for transport in the cask. For contents with a large number of gammas, the gammas may be grouped into energy groups and the photons per second determined for the group. Typical energy groupings (in MeV) are: 0.25-0.35, 0.35-0.45, 0.45-0.55, 0.55-0.7, 0.7-0.9, 0.9-1.25, 1.25-1.75, 1.75-2.5, and 2.5-3.5.
5. Determine the unit density gamma activity limit for each photon energy (or for each energy group using the limit at the maximum energy of each photon group) from Step 3 using the plot in Figure A-1. For gamma energies below 0.5 MeV, use the value at 0.5 MeV. Use the point source or the distributed source limit as appropriate, as determined from Step 2.
6. If the content is a distributed source, determine the Density Correction Factor (DCF) using the plot in Figure A-2. The applicable DCF is the smallest value at a particular density from the range of energy curves. If the density is above 6, use the DCF for 6. If the density is less than 0.5, use the DCF at 0.5. Multiply the unit density gamma limit by the DCF to determine the specific density gamma limit.
7. Calculate the sum of fractions, i.e., divide the gamma/sec for each photon energy (or for each energy group) by the limit for that energy (or group) and sum the fractions.
8. If the sum is less than 1.0, the contents meet the activity limits of the CoC.
9. <u>Caution</u>: To ensure compliance, a sum of less than 0.9 is recommended.

Figure A-1 - Maximum Activity for Point and Unit Payload Density Distributed Sources

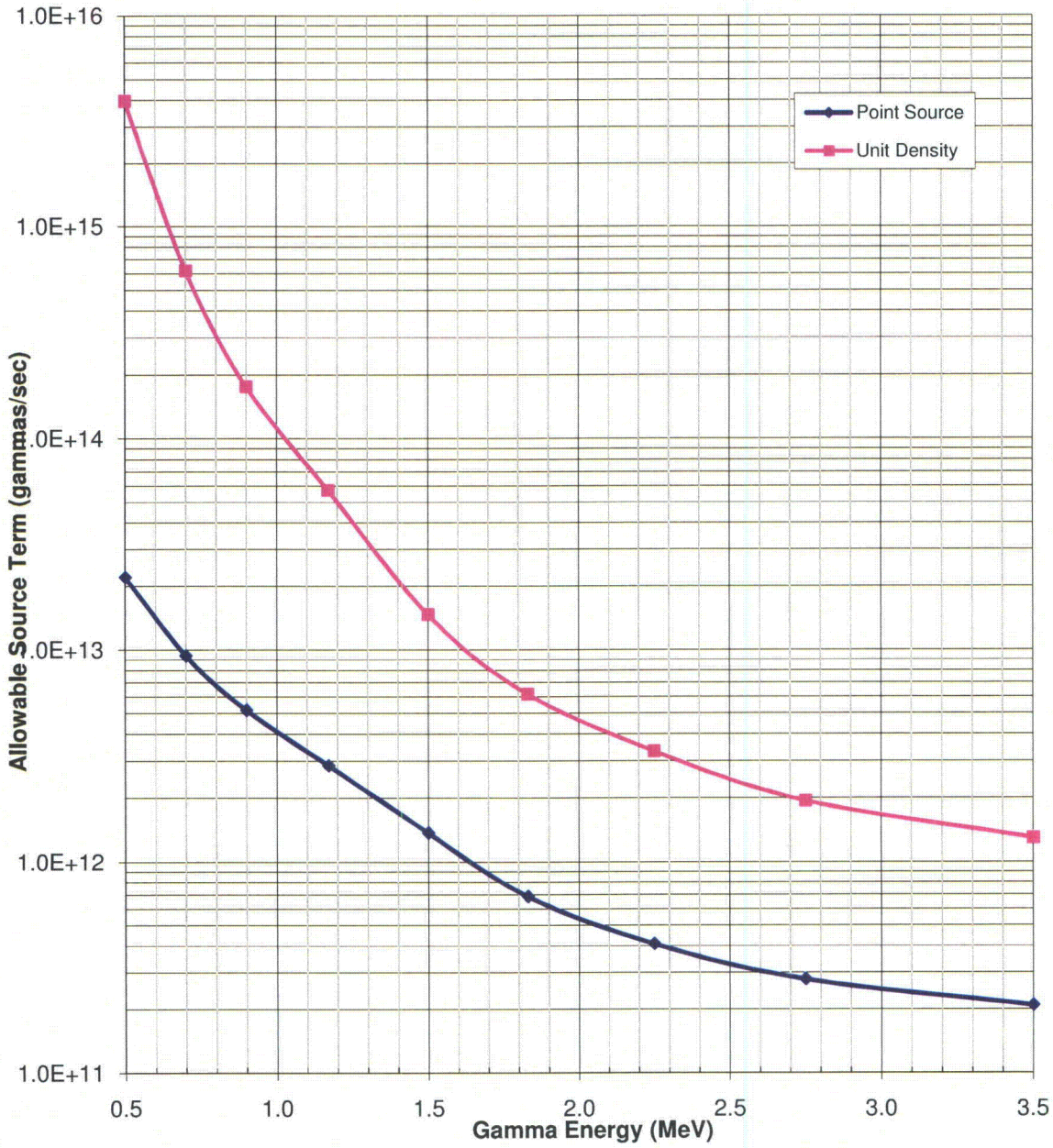

Figure A-2 - Density Correction Factor vs. Gamma Energy & Payload Density

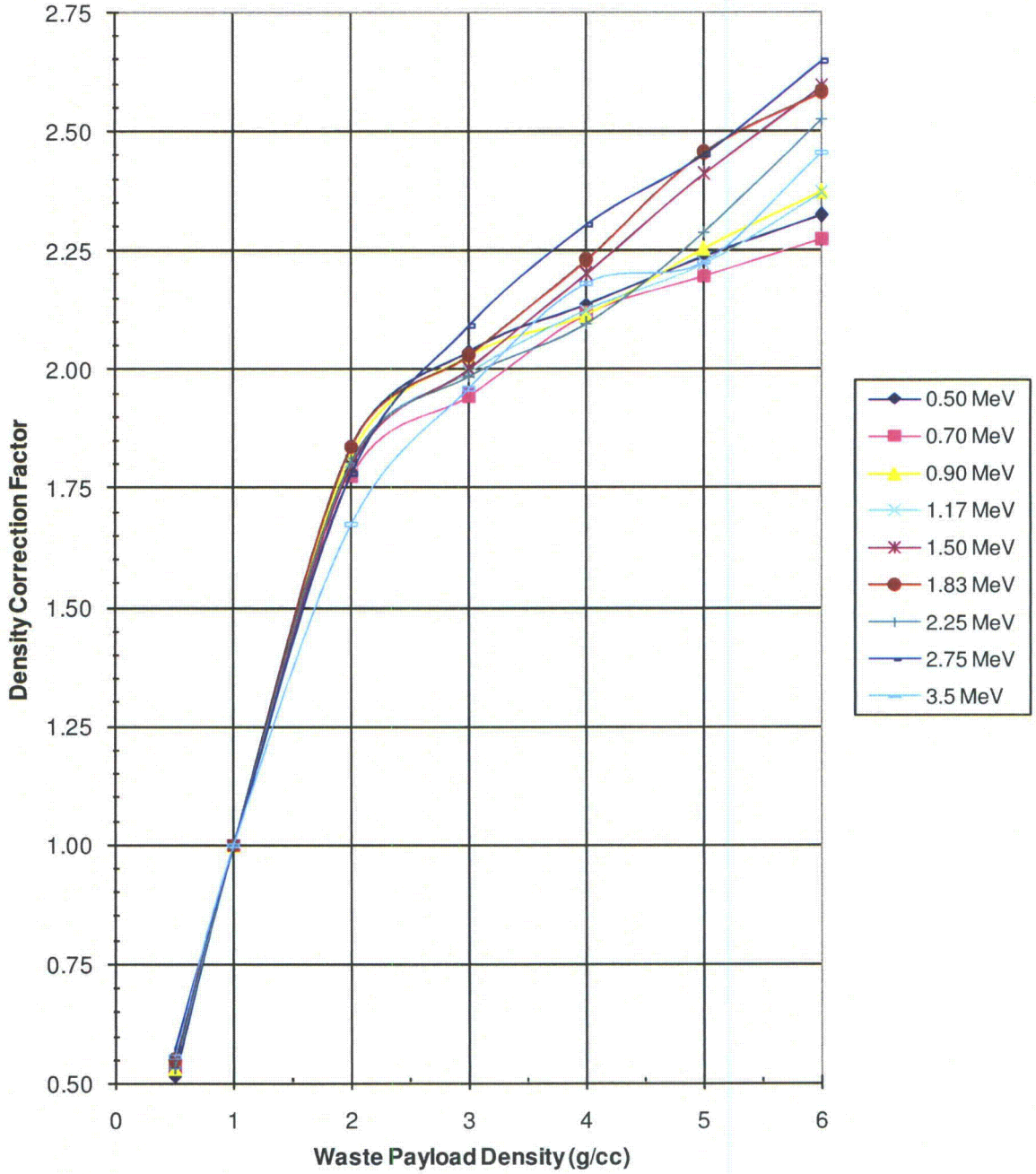

Example 1 - Determine the acceptability of a 50 Ci Mn-54 source. The source is a metal capsule 2 cm in diameter and 10 cm long.

Step 1 The activity is 50 Ci
Step 2 The content is not a distributed source
Step 3 The content does not include beta sources.
Step 4 Mn-54 produces 1.0 gammas per decay with an energy of 0.8.35 MeV. The total gamma/sec is 3.7E+10 d/sec per Ci x 1.0 gamma/d x 50Ci = 1.85E+12 gamma/sec.
Step 5 The limit for energy 0.835 for a point source is 6.0E+12.
Step 6 NA
Step 7 Sum = 1.85E+12 / 6.0+12 = 0.31
Step 8 Sum is less than 1. The content meets the activity limits.

Example 2 – Determine the acceptability of a 100 ft^3 secondary container containing solidified process waste. The activity is uniformly distributed. The measured weight of the filled container is 13,100 lbs. The isotopic activity, determined by analysis of samples of the waste, is: ^{60}Co-5 Ci, ^{137}Cs-10 Ci, ^{55}Fe-50 Ci, ^{54}Mn-4 Ci, ^{90}Sr-8 Ci

Step 1 The activity is 77 Ci
Step 2 The contents are a distributed source. The calculated density is 2.1 g/cm^3.
Step 3 The beta source activity is less than 2E+12 beta/sec.
Step 4 See Table below
Step 5 See Table below
Step 6 See Table below
Step 7 See Table below

Group No.	Group Max Energy (MeV)	Activity (photons/sec)	Unit Density Limit (photons/sec)	DCF (ρ=2.1)	Specific Density Limit (photons/sec)	F
1	0.35	0.0E+00	4.0E+15	1.8E+00	7.2E+15	0.0E+00
2	0.45	0.0E+00	6.2E+14	1.8E+00	1.1E+15	0.0E+00
3	0.55	0.0E+00	1.8E+14	1.9E+00	3.3E+14	0.0E+00
4	0.7	3.2E+11	5.8E+13	1.8E+00	1.0E+14	3.0E-03
5	0.9	1.5E+11	1.5E+13	1.9E+00	2.7E+13	5.4E-03
6	1.25	1.9E+11	6.2E+12	1.9E+00	1.1E+13	1.6E-02
7	1.75	1.9E+11	3.4E+12	1.9E+00	6.4E+12	2.9E-02
8	2.5	0.0E+00	2.0E+12	1.9E+00	3.6E+12	0.0E+00
9	3.5	0.0E+00	1.3E+12	1.7E+00	2.2E+12	0.0E+00
						5.4E-02

Step 8 F is less than 1. Thus, the contents meet the activity limits.

Example 3 - Determine the acceptability of a 60 Ci P-32 source. The source is a metal capsule 2 cm in diameter and 10 cm long.

1. The activity is 60 Ci
2. The content is not a distributed source
3. The content is a beta source with A_β =2.22E+12 β/s. E_{max}=1.71 MeV. E_{avg}=0.7 MeV. A_γ=2.22E+12 x 9.1E-03*0.7=1.41E+10 γ/s.
4. P-32 does not produce any direct gamma. The equivalent gamma source from Bremsstralung produces 1.41E+10 gammas per sec with an energy of 1.71 MeV.
5. The limit for energy 1.71 MeVfor a point source is 8.7E+11.
6. NA
7. Sum = 1.41E+10 / 8.7E+11 = 0.02
8. Sum is less than 1. The content meets the activity limits.

Example 4 – Determine the acceptability of a 100 ft^3 secondary container containing solidified process waste. The activity is uniformly distributed. The measured weight of the filled container is 13,100 lbs. The isotopic activity, determined by analysis of samples of the waste, is: ^{60}Co-5 Ci, ^{137}Cs-10 Ci, ^{55}Fe-50 Ci, ^{54}Mn-4 Ci, ^{90}Sr-30 Ci

Step 1 The activity is 99 Ci

Step 2 The contents are a distributed source. The calculated density is 2.1 g/cm^3.

Step 3 The content is a beta source with A_β =2.22E+12 β/s, which includes the beta from Y-90. E_{max}= 0.546 and 1.71 MeV. E_{avg}= 0.18 and 0.9 MeV. A_{Sr}=1.11E+12 x 9.1E-03*0.18=1.82E+09 γ/s. A_Y=1.11E+12 x 9.1E-03*0.9=9.09E+09 γ/s.

Step 4 See Table below

Step 5 See Table below

Step 6 See Table below

Step 7 See Table below

Group No.	Group Max Energy (MeV)	Activity (photons/sec)	Unit Density Limit (photons/sec)	DCF (ρ=2.1)	Specific Density Limit (photons/sec)	F
1	0.35	0.0E+00	4.0E+15	1.8E+00	7.2E+15	0.0E+00
2	0.45	0.0E+00	6.2E+14	1.8E+00	1.1E+15	0.0E+00
3	0.55	1.8E+09	1.8E+14	1.9E+00	3.3E+14	5.5E-06
4	0.7	3.2E+11	5.8E+13	1.8E+00	1.0E+14	3.0E-03
5	0.9	1.5E+11	1.5E+13	1.9E+00	2.7E+13	5.4E-03
6	1.25	1.9E+11	6.2E+12	1.9E+00	1.1E+13	1.6E-02
7	1.75	1.9E+11	3.4E+12	1.9E+00	6.4E+12	3.0E-02
8	2.5	0.0E+00	2.0E+12	1.9E+00	3.6E+12	0.0E+00
9	3.5	0.0E+00	1.3E+12	1.7E+00	2.2E+12	0.0E+00
						5.5E-02

Step 8 F is less than 1. Thus, the contents meet the activity limits.

Attachment 2
Determination of Hydrogen Concentration

1. Determine the radionuclide concentration in the contents.
   For any package containing materials with radioactivity concentration not exceeding that for LSA, ensure the shipment occurs within 10 days of preparation, or within 10 days of venting the secondary container.
   For packages which satisfy the previous conditions, go to step 11, otherwise continue with step 2.

2. Determine the secondary package(s) void volume and the cask cavity void volume.

3. Identify the secondary container(s) vent path, if applicable

4. Determine the quantity of hydrogenous contents

5. Determine the G value of the hydrogenous contents per NUREG/CR-6673[1], Section 3.

6. Determine the energy deposition rate in the hydrogenous contents

7. Determine the hydrogen generation rate per NUREG/CR-6673, Section 4.2

8. Determine the effective hydrogen transport rate due to diffusion for the vent path; see NUREG/CR-6673, Section 4.1

9. Determine the shipping time to reach a hydrogen concentration of 5% in the package; see NUREG/CR-6673, Section 4.2.2.1 and Appendix F, Example #4.

10. If the time to reach 5% concentration is more than double the expected shipping time, the shipment meets the hydrogen concentration requirement.

11. Authorize the shipment

1

B. L. Anderson et al. *Hydrogen Generation in TRU Waste Transportation Packages* , NUREG/CR-6673, Lawrence Livermore National Laboratory, Livermore, CA, February 2000

8.0 ACCEPTANCE TESTS AND MAINTENANCE PROGRAM

Acceptance tests for Configurations 1 and 2 have different weld examination and leak tests than Configuration 3. Maintenance is the same for all configurations.

8.1 ACCEPTANCE TESTS – CONFIGURATIONS 1 AND 2 (CASKS FABRICATED BEFORE APRIL 1, 1999)

Prior to the first use of the 8-120B package fabricated to Configuration 1 or 2, the following tests and evaluations will be performed.

8.1.1 Visual Examination

The package will be examined visually for any adverse conditions in materials or fabrication. Welds shall be examined for compliance to the drawings. Weld integrity shall be verified by visual examination and magnetic particle or dye penetrant. NDE examinations shall be performed by an ASME Certified inspector. Acceptance criteria for NDE shall be according to ASME Code Section III, Div. 1-Section NB5342 or NB5352 as applicable.

8.1.2 Structural Tests

No structural testing is required.

8.1.3 Leak Tests

This test shall be performed prior to acceptance and operation of a newly fabricated package in accordance with ASTM E-427 using a leak detector capable of detecting the applicable leak rates specified in Figures 4.3 and 4.7 in Chapter 4. Calibration of the leak detector shall be performed using a leak rate standard traceable to NIST. The standard's setting shall correspond to the approved leak rates specified in Figures 4.3 and 4.7 in Chapter 4.

All four containment boundary penetrations must be tested.

- The volume above the vent port Stat-O-Seal
- The volume between the drain line plug and interior of the cask
- The annulus between the o-ring seals of the primary lid
- The annulus between the o-ring seals of the secondary lid

All four of these volumes must be evacuated to a minimum vacuum of 20" Hg, and then be pressurized to a minimum pressure of 25 psig with pure dichlorodifluoromethane (R-12) or 1,1,1,2 – tetrafluoroethane (R-134a). Use the detector probe to "sniff" the following areas:

- The vent port penetration on the underside of the primary lid
- Around the head of the cap screw that plugs the drain line
- Interior side of the inner o-ring for the primary lid
- Interior side of the inner o-ring for the secondary lid

Leak detection shall be in accordance with the specifications of ASTM E-427.

Any condition, which results in leakage in excess of the applicable values specified in Figures 4.3 and 4.7 in Chapter 4 shall be corrected.

8.1.4 Component Tests

Gaskets and seals will be procured and examined in accordance with the Energy*Solutions* Quality Assurance Program.

8.1.5 Test for Shielding Integrity

Shielding integrity of the package will be verified by gamma scan or gamma probe methods to assure the package is free of significant voids in the poured lead shield annulus. All gamma scanning will be performed on a 4-inch square or less grid system. The acceptance criteria will be that measurements which indicate that the lead layer is less than the minimum specified on the drawing shall not be acceptable.

8.1.6 Thermal Acceptance Tests

No thermal acceptance testing will be performed on the 8-120B package. Refer to the Thermal Evaluation, Chapter 3.0 of the report.

8.2 ACCEPTANCE TESTS – CONFIGURATION 3 (CASKS FABRICATED AFTER APRIL 1, 1999)

Prior to the first use of an 8-120B package fabricated to Configuration 3, the following tests and evaluations will be performed:

8.2.1 Visual Inspections and Measurements

Throughout the fabrication process, confirmation by visual examination and measurement are required to be performed to verify that the 8-120B packaging dimensionally conforms to the drawing referenced in the current Certificate of Compliance for the 8-120B.

The packaging is also required to be visually examined for any adverse conditions in materials or fabrication that would not allow the packaging to be assembled and operated per Section 7.0 or tested in accordance with the requirements of Section 8.0.

Throughout the fabrication process, the fabricator shall request approval from Energy*Solutions* prior to implementation of any options allowed in the drawing.

8.2.2 Weld Examinations

8.2.2.1 Containment boundary welds identified on drawing C-110-E-0007 are required to be inspected and are required to meet the acceptance requirements of ASME Code, Section III, Division I, Subsection ND, Article ND-5000.

8.2.2.2 The Containment Boundary welds listed below shall be inspected by radiographic examination (RT) in accordance with ASME Code Section III – Division I, Subsection ND-5200, with weld acceptance per ASME Code, Section III, Division I, Subsection ND, Article ND-5320. In lieu of RT examination, the weld may be examined by ultrasonic examination (UT) plus magnetic particle examination (MT) per ASME Code, Section III, Division I, Subsection ND, Article ND-5330 and Article ND-5340 respectively only as permitted by ASME Code, Section III, Division I, Subsection ND, Article ND-5279.

On drawing C-110-E-0007, the welds to be examined by RT or UT+MT per above provisions are:

a. Weld between Item 3, Inner Cask Shell and Item 4, Bolting Ring.
b. Weld between Item 3, Inner Cask Shell and Item 5A, Cask Bottom Plate.
c. Any seam welds on Item 3, Inner Cask Shell.
d. Weld between Item 17, and Item 18, Primary Lid.

The Containment boundary welds listed below are required to be inspected by liquid penetrant examination (PT), as noted, and are required to meet the acceptance requirements of ASME Code, Section III, Division I, Subsection ND, Article ND-5350.

On drawing C-110-E-0007, the welds to be examined by PT are:

e. Weld between Item 9, Primary Lid Seal Seating Plate and Item 4, Bolting Ring.
f. Any seam welds on Item 9, Primary Lid Seal Seating Plate.
g. Weld between Item 21, O-Ring Seal Plate and Item 17, Primary Lid.
h. Weld between Item 21, O-Ring Seal Plate and Item 36, Secondary Lid.
i. Weld between Item 19, Secondary Lid Seal Seating plate and Item 18, Primary Lid.
j. Weld between Item 19 and Item 20 Secondary Lid Seal Seating Area.
k. Any seam welds on Items 19 or 20 Secondary Lid Seal Seating Area.

8.2.2.3 Non-containment boundary welds on drawing C-110-E-0007 are required to be inspected and are required to meet the acceptance requirements of ASME Code, Section III, Division I, Subsection NF, Article NF-5000.

Non-containment boundary welds identified on drawing C-110-E-0007 as MT are required to be inspected in accordance with ASME Code Section III – Division I, Subsection NF-5230, and are required to meet the acceptance requirements of ASME Code, Section III, Division I, Subsection NF, Article NF-5340.

On drawing C-110-E-0007, the welds to be examined by MT are:

a. Weld between Item 5, Cask Bottom Inner Plate and Item 3, Inner Cask Shell.
b. Weld between Item 5, Cask Bottom Inner Plate and Item 5A, Cask Bottom Plate.
c. Weld between Item 1, Outer Cask Shell and Item 4, Bolting Ring.
d. Weld between Item 36, and Item 37, Secondary Lid.
e. Any seam welds on Item 1, Outer Cask Shell.

8.2.2.4 The Non-containment boundary welds listed below are required to be inspected by magnetic particle examination (MT) in accordance with ASME Code Section III – Division I, Subsection NF-5230, after the root pass and after the cover pass and are required to meet the acceptance requirements of ASME Code, Section III, Division I, Subsection NF, Article NF-5340.

On drawing C-110-E-0007, the welds to be examined by MT (Root Pass) and MT (After Cover Pass) are:

a. Weld between Item 5B, Cask Bottom Plate and Item 1, Outer Cask Shell.
b. Weld between Item 5A and Item 5B, Cask Bottom Plate.

8.2.2.5 Welds on lifting and tiedown lugs identified on drawing C-110-E-0007 are required to be inspected by magnetic particle examination (MT) and are required to meet the acceptance

requirements of ASME Code, Section III, Division I, Subsection ND, Article ND-5340 or NF, Article NF-5340. Inspection shall be before and after 150% load test.

8.2.3 Structural and Pressure Tests

A pressure test of the containment system will be performed as required by 10CFR71.85. As determined in Section 3.4.4, the maximum normal operating pressure for the cask cavity is 35 psig; therefore the minimum test pressure will be 1.5 x 35 = 52.5 psig. The hydrostatic test pressure will be held for a minimum of 10 minutes prior to initiation of any examinations. Following the 10 minute hold time, the cask body, lid and lid/body closure shall be examined for leakage. Any leaks, except from temporary connections, will be remedied and the test and inspection will be repeated. After depressurization and draining, the cask cavity and seal areas will be visually inspected for cracks and deformation. Any cracks or deformation will be remedied and the test and inspection will be repeated.

8.2.4 Leakage Tests

The Fabrication Leakage Test shall be performed prior to acceptance and operation of packages fabricated after January 1, 2011.

8.2.4.1 General requirements

- Testing method – Per ANSI N-14.5 in accordance with ASTM E-427 if using a halogen leak detector or ASTM E-499 if using a helium leak detector.
- Test Sensitivity – the test method must be capable of meeting the appropriate sensitivity requirements specified in Figures 4.4 or 4.7 in Section 4.0. Calibration of the leak detector shall be performed using a leak rate standard traceable to NIST.
- The leak standard's setting shall correspond to the approved leak test rate (see Section 4.0).
- Any condition, which results in leakage in excess of the maximum allowable leak rate specified in Figures 4.3 or 4.6 (depending on the test gas used), shall be corrected and re-tested.

8.2.4.2 Testing of the entire containment boundary will be performed prior to lead pour to allow access to all containment welds. The containment boundary includes: the inner shell, the cask bottom base plate (BOM 5A), the bolting ring, the lids, the O-ring seal plates of both lids, the inner O-ring of both lids, and the vent port cap screw and its seal.

- (Optional) Insert the sealed metal cavity filler canister into the cask cavity. Verify the canister does not obstruct the vent penetration. The metal must be chemically compatible with the cask liner and the test gas.
- Assemble the cask lids per Section 7.1.
- Evacuate the cask cavity to 20" Hg vacuum, minimum (sealed metal cavity filler canister may be used within the cask cavity)
- Pressurize the cask cavity to a minimum pressure of:
  1) 25 psig with pure 1,1,1,2 – tetrafluoroethane (R-134a),
     or
  2) 1 psig with pure helium.
- Check for leakage of the inner shell and base plate components
- Measure the leakage of the inner (containment) O-ring via the test port in each lid.
- Check for leakage at the vent port.

8.2.5 Component and Material Tests

Energy*Solutions* will apply its USNRC approved 10CFR71 Appendix B Quality Assurance Program, which implements a graded approach to quality based on a component's or material's importance to safety to assure all materials used to fabricate and maintain the 8-120B are procured with appropriate documentation which meet the appropriate tests and acceptance criteria for packaging materials.

This includes as example:
ASTM steel material used for shells, lids, bolts, etc. will comply with and meet ASTM manufacturing requirements.
Seals will meet requirements of ES-C-038, which is included in Appendix 8.3.1.
The impact limiter foam will meet the requirements of ES-M-175, which is included in Appendix 8.3.1.

8.2.6 Shielding Tests

Shielding integrity of the packaging will be verified by gamma scan to assure the packaging has a lead shielding layer equal to or greater than the minimum specified on the drawing. All gamma scanning will be performed on a 4-inch square or less grid system. The acceptance criteria will be that measurements indicating the lead layer is less than the minimum specified on the drawing shall not be acceptable. Any results not meeting this requirement will be remedied and the test and inspection will be repeated.

8.2.7 Thermal Tests

No thermal acceptance testing will be performed on the 8-120B packaging. Refer to the Thermal Evaluation, Section 3.0 of this report.

8.2.8 Miscellaneous Tests

No miscellaneous testing will be performed on the 8-120B packaging.

8.3 MAINTENANCE PROGRAM

Energy*Solutions* operates an ongoing preventative maintenance program for all shipping packages. The 8-120B package will be subjected to routine and periodic inspection and tests as outlined in this section and the approved procedure based on these requirements. Defective items are replaced or remedied, including testing, as appropriate.

Examples of inspections performed prior to each use of the cask include:

Cask Seal Areas: O-rings are inspected for any cracks, tears, cuts, or discontinuities that may prevent the O-ring from sealing properly. O-ring seal seating surfaces are inspected to ensure they are free of scratches, gouges, nicks, cracks, etc. that may prevent the O-ring from sealing properly. Defective items are replaced or remedied, as appropriate and tested in accordance with Section 8.3.2.

Cask bolts, bolt holes, and washers are inspected for damaged threads, severe rusting or corrosion pitting. Defective items are replaced or remedied, as appropriate.

Lift Lugs and visible lift lug welds are inspected to verify that no deformation of the lift lug is evident and that no obvious defects are visible. Defective items are replaced or remedied, as appropriate and tested in accordance with Section 8.2.2.5.

8.3.1 Structural and Pressure Tests

No routine or periodic structural or pressure testing will be performed on the 8-120B packaging.

8.3.2 Leakage Tests

8.3.2.1 Periodic and Maintenance Leak Test.

The 8-120B packaging shall have been leak tested as described below within the preceding 12-month period before actual use for shipment and after maintenance, repair (such as weld repair), or replacement of components of the containment system.

The 8-120B packaging seals shall have been replaced within the 12-month period before actual use for shipment.

General requirements

- Testing method – Per ANSI N-14.5 in accordance with ASTM E-427 if using a halogen leak detector or ASTM E-499 if using a helium leak detector.
- Test Sensitivity – the test method must be capable of meeting the appropriate sensitivity requirements specified in Figures 4.4 or 4.7 or in Section 4.8. Calibration of the leak detector shall be performed using a leak rate standard traceable to NIST.
- The leak standard's setting shall correspond to the approved leak test rate (see Section 4.0).
- Any condition, which results in leakage in excess of the appropriate maximum allowable leak rate specified in Figures 4.3, 4.6 or Section 4.8, shall be corrected and re-tested.

Testing of the Lids and Vent

- (Optional) Insert the sealed metal cavity filler canister into the cask cavity. Verify the canister does not obstruct the vent penetration. The metal must be chemically compatible with the cask liner and the test gas.
- Assemble the cask lids per Section 7.1.
- Evacuate the cask cavity to 20" Hg vacuum (minimum) or 90% vacuum for the leak tight test.
- Pressurize the cask cavity to a minimum pressure of:
  1) 25 psig with pure 1,1,1,2 – tetrafluoroethane (R-134a),
     or
  2) 1 psig with pure helium.
- Measure the leakage of the inner (containment) O-ring via the test port in each lid.
- Measure the leakage of the vent port.

Testing of the Lids – Optional Method

- Assemble the cask lids per Section 7.1.
- Connect to the O-ring test port on the lid and evacuate the annulus between the cask lid O-rings to 20" Hg vacuum (minimum)
- Pressurize the O-ring annulus to a minimum pressure of 25 psig with pure 1,1,1,2 – tetrafluoroethane (R-134a),
- Check for leakage of the inner (containment) O-ring by moving a detector probe along the interior surface of the inner seal according to the specifications of ASTM E-427.

Testing of the Vent – Optional Method

- Assemble the cask Vent Port Cap Screw and Seal per Section 7.1.
- With the vent port cover (Item 30) removed, connect to and evacuate the volume above (lid exterior) the Vent Port Cap Screw and Seal (Items 26 and 27) to 20" Hg vacuum (minimum)
- Pressurize the volume to a minimum pressure of 25 psig with pure 1,1,1,2 – tetrafluoroethane (R-134a),
- Check for leakage of the Vent Port Cap Screw and Seal by moving a detector probe along the interior surface of the Primary Lid in the area of the vent port according to the specifications of ASTM E-427.

The requirements for Periodic and Maintenance Leak Testing of the 8-120B are summarized in Table 8.1.

Table 8.1
Periodic and Maintenance Leak Test of 8-120B

Component	Test Gas	Max. Leak Rate	Minimum Sensitivity	Test Pressure	Procedure	Alternate Procedure
Lid	R-134a	Fig. 4.3	Fig. 4.4	Evacuate cask cavity to 20" Hg then pressurize to 25 psig.	After pressurizing the cask cavity with the test gas, check for gas leakage from the cask Lid inner O-ring using the cask Lid test port.	After pressurizing between the lid O-ring annulus with the test gas, check for gas leakage from the cask Lid inner O-ring using a detector probe.
	Helium	Fig. 4.6	Fig. 4.7	Evacuate cask cavity to 20" Hg, or 90% vacuum for the leak tight test, then pressurize to 1 psig.	After pressurizing the cask cavity with the test gas, check for gas leakage from the cask Lid inner O-ring using the cask Lid test port.	N/A
Vent Port	R-134a	Fig. 4.3	Fig. 4.4	Evacuate cask cavity to 20" Hg then pressurize to 25 psig.	After pressurizing the cask cavity with the test gas, check for gas leakage from the Vent Port and Seal.	After pressurizing the volume above the Vent Port Cap Screw and Seal with the test gas, check for gas leakage from the vent penetration on the inner side of the lid using a detector probe.
	Helium	Fig. 4.6	Fig. 4.7	Evacuate cask cavity to 20" Hg, or 90% vacuum for the leak tight test, then pressurize to 1 psig.	After pressurizing the cask cavity with the test gas, check for gas leakage from the Vent Port Cap Screw and Seal.	N/A

8.3.2.2 Pre-Shipment Leak Test

a. This test is required before each shipment of Type B material quantities. The test will verify that the containment system has been assembled properly.

Note: The pre-shipment leak test is not required before a shipment if the contents meet the definition of low specific activity materials or surface contaminated objects in 10CFR71.4, and also meet the exemption standard for low specific activity materials or surface contaminated objects in 10CFR71.14(b)(3)(i).

b. The test will be performed by pressurizing the annulus between the O-ring seals of each lid, or inlet to the vent port with dry air or nitrogen.

Note: The pre-shipment leak test is typically performed using a test manifold that may be constructed from tubing, fittings, isolation valves and a pressure gauge. Any test apparatus used for this test must have an internal volume, with isolation valves closed and the apparatus connected to the test port location, of less than or equal to 10 cm^3 to achieve the required test sensitivity for the hold time specified in Section 8.3.2.2.d.

Note: If air is used for the test, the air supply should be clean and dry. If it is not, or if the quality of the air supply is uncertain, the test should be performed with nitrogen to ensure reliable results.

c. The test shall be performed using a pressure gauge, accurate within 1%, or less, of full scale.

d. The test pressure shall be applied for at least 15 minutes for the lid or vent port. A drop in pressure of greater than the minimum detectable amount shall be cause for test failure. The maximum sensitivity of the gauge shall be 0.1 psig.

e. Sensitivity at the test conditions is equivalent to the prescribed procedure sensitivity of 10^{-3} ref-cm^3/sec based on dry air at standard conditions as defined in ANSI N14.5-1997 (See Section 4.5 for the determination of the test conditions).

Table 8.2 summarizes pre-shipment leak test requirements for the 8-120B:

Table 8.2
Pre-Shipment Leak Test of 8-120B Components

Component	Hold Time	Procedure
Lid	15 min.	Connect test manifold to the test port. Pressurize void between O-rings with the test gas, close the isolation valves and hold for the minimum hold time. A drop in pressure of greater than the minimum detectable amount shall be cause for test failure.
Vent Port	15 min.	Remove the threaded cap covering the vent port. Connect test manifold to the vent port. Pressurize the seal and head of the vent port cap screw for the minimum hold time. A drop in pressure of greater than the minimum detectable amount shall be cause for test failure.

8.3.3 Component and Material Tests

Cask seals (O-rings) are inspected each time the cask lids or vent port cap screw are removed. Inspection and replacement of the seal is discussed in Section 8.3.

New seals are lightly coated with a lightweight lubricant such as Parker Super O-Lube or equivalent prior to installation. The lubricant will minimize deterioration or cracking of the elastomer during usage and tearing if removal from the dovetail groove is necessary for inspection. Coating the exposed surfaces of installed lid seals with the lightweight lubricant immediately prior to closing the lid can help to minimize deterioration or cracking of the seal during use. Excess lubricant should be wiped off before closing the lid.

Painted surfaces, identification markings, and match marks used for closure orientation shall be visually inspected to ensure that painted surfaces are in good condition, identification markings are legible, and that match marks used for closure orientation remain legible and are easy to identify.

Visible cask external and cavity welds shall be inspected within twelve months prior to use to verify that the welds specified by the applicable cask drawing are present and that no obvious weld defects are visible. If paint is covering these welds, the inspection may be completed without removing the paint.

8.3.4 Thermal Tests

No periodic or routine thermal testing will be performed on the 8-120B packaging.

8.3.5 Miscellaneous Tests

8.3.5.1 Repair of Bolt Holes

Threaded inserts may be used for repair of bolt holes. The following steps shall be performed for each repair using a threaded insert.

a. Install threaded insert(s), sized per manufacturer's recommendation, per the manufacturer's instructions.

b. At a minimum, each repaired bolt hole(s) will be tested for proper installation by assembling the joint components where the insert is used and tightening the bolts to their required torque value.

Note: If the repair is to bolt holes for lifting components, then a load test will also be performed to the affected components equal to 150% of maximum service load.

c. Each threaded insert shall be visually inspected after testing to insure that there is no visible damage or deformation to the insert.

8.3.6 APPENDICES

8.3.6.1 Appendix

Polyurethane Foam Specification ES-M-175
(available on request)

8-120B Seal Specification ES-C-038
(available on request)