U.S. NUCLEAR REGULATORY COMMISSION

October 2013
Revision 2

Technical Lead
F. X. Talbot

REGULATORY GUIDE

OFFICE OF NUCLEAR REGULATORY RESEARCH

REGULATORY GUIDE 1.79

(Draft was issued as DG-1253 dated May 2011)

PREOPERATIONAL TESTING OF EMERGENCY CORE COOLING SYSTEMS FOR PRESSURIZED-WATER REACTORS

A. INTRODUCTION

Purpose

This revision of regulatory guide (RG) 1.79 describes the general scope and depth the staff of the U.S. Nuclear Regulatory Commission (NRC) considers acceptable for demonstrating compliance with the NRC regulations identified below as they relate to preoperational testing of features in the emergency core cooling systems (ECCSs) of pressurized water reactors (PWRs). This RG also describes methods the NRC staff finds acceptable for preoperational testing of ECCS structures, systems, and components (SSCs). Appendix A of this RG contains a discussion of the ECCS for the current fleet of PWRs as well as diagrams and descriptions of the ECCS for advanced PWR designs including the U.S. Advanced Pressurized-Water Reactor, U.S. Evolutionary Power Reactor, and AP1000.

Applicable Rules and Regulations

This RG describes preoperational testing methods acceptable to the NRC staff specifically for ECCSs in PWRs. This RG is applicable to all PWRs licensed under Title 10 of the *Code of Federal Regulations,* Part 50, "Domestic Licensing of Production and Utilization Facilities" (10 CFR Part 50) (Ref. 1) or 10 CFR Part 52, "Licenses, Certifications, and Approvals for Nuclear Power Plants" (Ref. 2).

Nuclear power plant SSCs must be tested to quality standards commensurate with their importance to safety. Criterion XI, "Test Control," of Appendix B, "Quality Assurance Criteria for Nuclear Power Plants and Fuel Reprocessing Plants," to 10 CFR Part 50 requires licensees to establish a testing program to identify and perform all tests needed to demonstrate that SSCs will perform satisfactorily in service. This testing program is to be conducted in accordance with written test procedures that incorporate the requirements and acceptance criteria in applicable design documents. The ECCS functions to be tested are those necessary to ensure that specified design functions of the ECCS are met during any condition of normal operation, including abnormal operating occurrences, or because of postulated accident conditions.

Written suggestions regarding this guide or development of new guides may be submitted through the NRC's public Web site under the Regulatory Guides document collection of the NRC Library at http://www.nrc.gov/reading-rm/doc-collections/reg-guides/contactus.html.

Electronic copies of this regulatory guide, previous versions of this guide, and other recently issued guides are available through the NRC's public Web site under the Regulatory Guides document collection of the NRC Library at http://www.nrc.gov/reading-rm/doc-collections/. The regulatory guide is also available through the NRC's Agencywide Documents Access and Management System (ADAMS) at http://www.nrc.gov/reading-rm/adams.html, in ADAMS at Accession No. ML113540207. The regulatory analysis may be found in ADAMS at Accession No. ML113540212 and the staff responses to the public comments on DG-1253 may be found in ADAMS at Accession No. ML13007A389.

Related Guidance

- RG 1.68, "Initial Test Programs for Water-Cooled Nuclear Power Plants" describes a method acceptable to the NRC staff for complying with the Commission's regulations with regard to preoperational testing of nuclear power plant SSCs that perform functions important to safety.

- RG 1.79.1, "Initial Test Program of Emergency Core Cooling Systems for New Boiling-Water Reactors" describes methods that the NRC staff finds acceptable for initial plant testing of the Isolation Condenser System, Reactor Core Isolation Cooling System, and ECCS SSCs for boiling water reactors.

- RG 1.82, "Water Sources for Long-Term Recirculation Cooling Following a Loss-of-Coolant Accident," includes regulatory positions on design criteria, performance standards, and analysis methods on ECCS water sources that relate to all water-cooled reactor types.

- RG 1.205, "Risk-Informed, Performance-Based Fire Protection for Existing Light-Water Nuclear Power Plants," provides additional guidance for the coordination and testing of protective breakers to prevent thermal overload of electrical motors.

Purpose of Regulatory Guides

The NRC issues RGs to describe to the public methods that the staff considers acceptable for use in implementing specific parts of the agency's regulations, to explain techniques that the staff uses in evaluating specific problems or postulated accidents, and to provide guidance to applicants. Regulatory guides are not substitutes for regulations and compliance with them is not required. Methods and solutions that differ from those set forth in RGs will be deemed acceptable if they provide a basis for the findings required for the issuance or continuance of a permit or license by the Commission.

Paperwork Reduction Act

This RG contains information collection requirements covered by 10 CFR Part 50 and 10 CFR Part 52 that the Office of Management and Budget (OMB) approved under OMB control numbers 3150-0011 and 3150-0151, respectively. The NRC may neither conduct nor sponsor, and a person is not required to respond to, an information collection request or requirement unless the requesting document displays a currently valid OMB control number.

B. DISCUSSION

Reason for Revision

The NRC issued Revision 1 of RG 1.79, "Preoperational Testing of Emergency Core Cooling Systems for Pressurized Water Reactors" (Ref. 3) in September 1975 to provide guidance to licenses and help ensure that PWRs licensed under the requirements of 10 CFR Part 50 properly test the ECCS before beginning normal operations. This RG is being revised to address the preoperational testing requirements for newer designs of PWRs including PWRs licensed under 10 CFR Part 52. The NRC has also added some operating experience changes to improve the ability of the testing program to identify potential ECCS component failures before plant startup.

Background

The NRC staff concluded that additional guidance should be provided regarding the scope of ECCS preoperational tests as a result of the NRC's design certification of the AP1000 and the ongoing NRC review of the design certification applications for the U.S. Evolutionary Power Reactor (U.S. EPR) and the U.S. Advanced PWR (US-APWR). The NRC staff also concluded that this RG should include additional guidance for ECCS preoperational tests based on recent operating experience from PWRs.

Standards Endorsed in this Guide

This RG endorses, in part, the use of one or more codes or standards developed by external organizations, and other third party guidance documents. These codes, standards, and third party guidance documents may contain references to other codes, standards, or third party guidance documents ("secondary references"). If a secondary reference has itself been incorporated by reference into NRC regulations as a requirement, then licensees and applicants must comply with that standard as set forth in the regulation. If the secondary reference has been endorsed in a RG as an acceptable approach for meeting an NRC requirement, then the standard constitutes a method acceptable to the NRC staff for meeting that regulatory requirement as described in the specific RG. If the secondary reference has neither been incorporated by reference into NRC regulations nor endorsed in a RG, then the secondary reference is neither a legally-binding requirement nor a "generic" NRC approval as an acceptable approach for meeting an NRC requirement. However, licensees and applicants may consider and use the information in the secondary reference, if appropriately justified and consistent with applicable NRC requirements.

Harmonization with International Standards

The International Atomic Energy Agency (IAEA) has established a series of safety guides and standards constituting a high level of safety for protecting people and the environment. IAEA safety guides present international good practices and increasingly reflect best practices to help users striving to achieve high levels of safety. Pertinent to this RG, IAEA Safety Guide NS-G-1.9, "Design of the Reactor Coolant System and Associated Systems in Nuclear Power Plants" (Ref. 4), issued in 2004, addresses design considerations for the ECCS in Sections 4.68 through 4.91. The NRC has an interest in facilitating the harmonization of standards used domestically and internationally. In this case there are many similar elements between this RG and the corresponding section of the safety guide. This RG consistently implements and details the principles and basic safety aspects provided in the IAEA safety guide.

General Discussion of Preoperational Testing Program

A comprehensive preoperational test program of the ECCS should ensure that it will accomplish its intended functions when required. The program should cover all test-related activities, including:

1. the development of test descriptions, test objectives, and specific acceptance criteria,
2. the preparation of test procedures,
3. the conduct of the tests and acquisition of system and component performance data, and
4. the resolution of deficiencies and deviations from expected performance.

The test program should include prerequisites for completion of construction tests and preoperational tests in coordination with the startup test group approval of test procedures, test configuration and test initiation. In accordance with RG 1.68, "Initial Test Programs for Water-Cooled Nuclear Power plants," (Ref. 5), Staff Regulatory Guidance C.4, the applicant or licensee's approved test procedures should be made available to NRC approximately 60 days before their intended use.

NRC Regulatory Issue Summary (RIS) 2013-09, "NRC Endorsement of NEI 09-10, Revision 1a-A, Guidelines for Effective Prevention and Management of System Gas Accumulation" (Ref. 6) endorses Nuclear Energy Institute (NEI) topical report No. 09-10, "Guidelines for Effective Prevention and Management of System Gas Accumulation," Rev. 1a-A, (Ref. 7) as an acceptable and recommended approach to managing gas accumulation in power reactor piping systems. The NRC staff uses this guidance when evaluating the applicant or licensee's treatment of gas accumulation concerns. As a prerequisite to ECCS preoperational tests, the licensee or applicant should verify that all types of non-condensable gases (i.e., air, hydrogen, nitrogen, oxygen, etc.) in the ECCS systems are kept to an acceptable level. This verification should be accomplished by performing nondestructive examination techniques, opening vent valves to remove non-condensable gases, or by other methods justified through an engineering evaluation. The engineering evaluation should consider void volume, void transport to pumps and pump void acceptance criteria and include performance of void transport analysis. The evaluation should document the rationale and determination that gas intrusion into the ECCS system would not adversely affect the ability of the system to perform its function. If non-condensable gases are vented through high-point vent valves, verify closure of the valves before starting the ECCS pumps (active PWR plants designs only). For the AP1000 passive plant ECCS designs with vent valves, if applicable, verify closure of the vent valves before starting the system.

As part of the design process prior to completing ECCS Technical Specification (TS) surveillance tests at power, the applicant or licensee should use the guidance in RG 1.82, "Water Sources for Long-Term Recirculation Cooling Following a Loss-of-Coolant Accident," (Ref. 8) to evaluate the susceptibility of active and passive ECCS to debris flow blockage. The ECCS strainer structure should include access openings and other design features, as required, to facilitate inspection of the strainer structures, any vortex suppressors, and the pump section piping inlets.

The guidance in RG 1.82 should be used to evaluate the susceptibility of active PWR ECCS plant designs to debris flow blockage and support an engineering evaluation of data collection from ECCS preoperational tests used to determine the adequacy of ECCS pump required test flow rates and Net Positive Suction Head (NPSH) needed to maintain core cooling. The engineering evaluation should include an evaluation of the susceptibility of the these ECCS suction strainers to debris flow blockage that can affect required ECCS pump performance and verify that the pumps can perform their intended safety function over the full range of postulated conditions up to and including design basis accident conditions.

Passive ECCS designs, such as the AP1000, should use the guidance in RG 1.82 to evaluate debris flow blockage with the exception that no evaluation of ECCS pump performance is needed. The engineering evaluation of the effects of passive ECCS debris flow blockage verified that the passive ECCS can achieve adequate core cooling over the full range of postulated conditions up to and including design basis accident conditions.

C. STAFF REGULATORY GUIDANCE

The test program should include tests and analyses for pump and valve capabilities. This test program should determine acceptable pump and valve performance under system flow, pressure, and temperature conditions as close to design as practical that allows analysis to demonstrate capability over the full range of operating conditions from normal operations to design basis accident conditions. For additional details, see Staff Regulatory Guidance C.2.b and C.2.c below.

1. System Testing

The preoperational testing of the ECCS should include the tests described below. Staff Regulatory Guidance for component-specific testing is described in Staff Regulatory Guidance item C.2 of this RG.

a. High-Pressure Safety Injection (Current Fleet of PWRs and US-APWR)

The preoperational test program should test each train of the High Pressure Safety Injection (HPSI) under both cold and simulated hot operating conditions before fuel loading. The tests below should verify all critical parameter acceptance criteria that are required for HPSI to meet its design basis.

(1) Flow Test - Cold Conditions. The reactor vessel may be open and flooded with the reactor coolant system (RCS) pressure at essentially atmospheric (zero gauge pressure) conditions. No attempt should be made to control the temperature of the water in the storage tank or in the accumulators. This test demonstrates system and component capability by injecting water[1] from the water storage tank into the reactor vessel through various combinations of injection legs and pumps.

(a) This test should be initiated by the safety injection signal with affected auxiliary systems in their standard operating mode.

(b) Testing should demonstrate that flow rates delivered through each injection flow path using all pump combinations are within the design specifications. Proper system activation time and sequencing should also be verified. Those plants that use this scheme to handle the loss-of-coolant accident (LOCA) should demonstrate the capability of the HPSI pumps to take suction from the low-pressure safety injection (LPSI) pumps.

(c) Testing should verify that pump motors will not trip off under flow conditions as close to design as practical and that adequate design margin exists between trip points and all operating conditions for the pump motors.

(d) Testing should verify that the electric power supply meets test acceptance criteria under all applicable design basis loading conditions.

(e) Verify proper operation of system valves. For additional details, see Staff Regulatory Guidance C.2.b below.

(2) Flow Test—Hot Conditions. The intent of this test is to demonstrate, by injecting water into the primary system at operating pressure and temperature conditions, that emergency core cooling water can be delivered into the reactor under conditions as close to design as practical that allows analysis to demonstrate capability over the full range of operating conditions from normal operations to design basis event conditions.

1 Because borated water is not made up until the hot functional testing program is completed, the use of unborated water is acceptable for this test.

(a) The reactor vessel should be closed and the RCS filled and maintained at the acceptable operating pressure and temperature level. The water level in the pressurizer should be as low as practical. Actuation of the safety injection signal should initiate system operation.

(b) This test should verify the capability of all HPSI pumps to deliver water as required under postulated accident conditions, based on test results and analysis using as-built HPSI pumps and system head-capacity curves. In addition, proper operation of the power operated valves and check valves should be verified.

(c) Any planned or unplanned actuation of the HPSI that results in the injection of cold fluid into the hot RCS should be documented in the preoperational test records discussed in Staff Regulatory Guidance C.3 of this guide.

b. Medium-Pressure Safety Injection (Westinghouse Four-Loop PWRs, U.S. EPR)

The preoperational test program should test the performance of critical components of the medium-pressure safety injection (MPSI) system (for those plants so equipped) under cold and simulated hot operating conditions before fuel loading.

(1) Flow Test – Cold Conditions. Flow testing of the MPSI system should be conducted in a manner similar to that for the HPSI system (see Staff Regulatory Guidance C.1.a.(1) above).

(2) Recirculation Test – Cold Conditions. If MPSI can be used to directly take suction from the containment sump, the recirculation test discussed in Staff Regulatory Guidance C.1.c.(2) below should be performed.

(3) Flow Test – Hot Conditions. Flow testing of the MPSI system should be conducted in a manner similar to that for the HPSI and LPSI system (see Staff Regulatory Guidance C.1.a.(2) and C.2.c.(2)).

c. Low-Pressure Safety Injection (LPSI) (Current Fleet of PWRs, U.S. EPR)

(1) Flow Test – Cold Conditions. Flow testing of the LPSI system should be conducted in a manner similar to that for the HPSI system (see Staff Regulatory Guidance C.1.a.(1) above).

(2) Recirculation Test – Cold Conditions. This test should demonstrate the ability of the injection pumps to recirculate cooling water from the containment floor or sump into the RCS and should cover any aspects of the design where both ECCS trains utilize a common component such as a containment emergency sump. This test should also demonstrate the capability to realign the valves for recirculation mode.

(a) Testing should verify proper vortex control in the suction lines from the sump and acceptable pressure drops in filtering mechanism, suction lines, and valves. Water level should be at a minimum level that may exist when recirculation flow from a containment emergency sump is initiated under actual accident conditions when assessing vortex behavior. To avoid RCS contamination, the sump water may be discharged to external drains or other systems.

(b) Testing should verify that the available net positive suction head (NPSH) is greater than that required for the pumps to achieve their design function by monitoring acceptable pump performance. Containment pressure and pump fluid temperature do not have to be controlled, but the NPSH available should be minimized based on the maximum design pumped fluid temperature and the minimum design containment pressure before the postulated LOCA. The postulated effect of debris should be considered when evaluating test results since test conditions and actual accident conditions may differ. For additional details on pump test guidance, see Staff Regulatory Guidance C.2.c. below.

(c) Testing should demonstrate proper operation of the containment sump instrumentation by simulating the containment flood-up water levels.

(d) Verify proper operation of system valves. For additional details, see Staff Regulatory Guidance C.2.b. below.

d. Core Flooding (Current Fleet of PWRs, US-APWR, U.S. EPR) (For AP1000 design, see Staff Regulatory Guidance position C.1.f. below.)

(1) Flow Test – Cold Conditions. This test should demonstrate proper system actuation and flow rates. For this test, the accumulators should be discharged one at a time into the reactor vessel after being filled to their normal level and pressurized with gas. Accumulator pressure and temperature are not critical, and the test may be conducted at any pressure up to normal pre-charge pressure. Test results for flow rates should be adjusted for the actual test pressure and temperature versus the design temperature and pressure. These tests apply to all passive injection systems.

(2) Isolation Valve Test. At some facilities, the accumulator isolation valves receive a confirmatory open signal whenever the safety injection signal is activated. This ensures that inadvertent valve closures do not prevent operation of the core flooding system. At facilities that have this design feature, testing should demonstrate that the valve will open under the maximum differential pressure conditions and maximum expected accumulator pre-charge pressures. This test should be conducted using both normal and emergency power supplies.

(3) Flow Test – Hot Conditions. This test should verify that check valves subject to higher-than-ambient temperatures during power operation will function properly at the higher temperatures. Any planned or unplanned actuation of core flooding that results in the injection of cold fluid into the hot RCS should be documented in the preoperational test records discussed in Staff Regulatory Guidance C.3 of this guide.

(a) Initially, the RCS and the accumulators should be at their normal operating temperature and pressure, with the RCS pressure higher than the accumulator pressure. Each accumulator injection train should be tested individually or simultaneously by opening the isolation valve and then slowly decreasing RCS pressure and temperature until the check valves operate as indicated by a decrease in the fluid level of each accumulator. To minimize the thermal cycling, the isolation valve should be closed as soon as check valve operation is verified.

(b) If the operability of these valves at high temperature is demonstrated during a different phase of the testing program, this specific test may be eliminated.

e. Emergency Letdown System (US-APWR)

The emergency letdown system (ELS) flow and isolation test verifies safe preparation for maintenance on the reactor pressure vessel and steam generators by draining down and isolating the RCS. During safe-shutdown seismic events, when the chemical volume and control system letdown is isolated from the RCS, ELS provides water to the refueling water storage pit (RWSP). Water from the RWSP then flows to the safety injection system (SIS) pumps.

(1) Flow and Isolation Test – Cold Conditions. This test should verify the ELS flow and isolation functions. Flow testing should be conducted in a manner similar to that for the LPSI system (see Staff Regulatory Guidance C.1.c.(1) above).

(2) Flow and Isolation Test – Hot Conditions. This test should demonstrate the ability of the ELS motor operated valves to control and throttle flow to the RWSP and supply depressurized water to the SIS. The test should successfully demonstrate adequate RCS water level in the pressurizer. When the system design includes isolation requirements for in-service conditions, this functional test should include actuation methods and actuation completion time requirements. This test is performed in combination with the SIS hot functional flow test similar to the HPSI hot functional flow test above (see Staff Regulatory Guidance C.1.a.(2).

f. Passive Core Cooling System—Safety Injection (AP1000)[2]

(1) Preoperational Instrumentation Control Test – Cold Conditions: This preoperational test should demonstrate proper operation of the system logic functions.

(2) Flow Tests – Cold Conditions. This test should verify the ability of the passive core cooling system (PCCS) components (core makeup tanks (CMTs), accumulators, in-containment refueling water storage tank (IRWST), containment sump, automatic depressurization system (ADS), and their associated piping and valves) to perform their intended safety function:

(a) Verify test acceptance criteria are met for flow resistance of each CMT injection line, accumulator injection line, IRWST tank injection line, the ADS stage flow paths and each of the flow paths from the IRWST to each containment sump, as well as from each containment sump to the reactor.

(b) Verify test acceptance criteria are met for operation of the vacuum breakers in the ADS discharge lines.

(c) Verify proper operation of system valves. For additional details, see Staff Regulatory Guidance C.2.b. below.

(d) Verify test acceptance criteria are met for operation of the containment sump instrumentation by simulating the containment flood-up water levels.

2 This RG does not include testing guidance for first-plant-only or first-three-plant-only tests for the AP1000 design. For additional details, see RG 1.68, Appendix A, Sections A-6 and A-7.

(e) Verify test acceptance criteria are met for operation of the CMT level instrumentation during drain down testing of the CMTs.

(3) Flow Tests – Hot Conditions.

During hot functional PCCS testing, the following should be verified:

(a) Verify test acceptance criteria are met for operation of the ADS Stage 1, 2, and 3 components, including the spargers, by blowing down the RCS to the IRWST.

(b) Verify test acceptance criteria are met for operation of the CMTs during transition from the recirculation mode to the drain down mode of operation.

(c) Any planned or unplanned actuation of the PCCS that results in the injection of cold fluid into the hot RCS should be documented in the preoperational test records discussed in Staff Regulatory Guidance C.3. of this guide below.

g. Passive Core Cooling System—Emergency Makeup and Boron Makeup (AP1000)

(1) Flow Test – Cold Conditions. System actuation and flow rates are verified to meet test acceptance criteria by the following test of the CMTs. Determine the resistance of the CMT cold-leg balance lines and check the appropriate acceptance criteria by filling the CMTs with flow from the cold legs. This test is normally performed by filling the cold, depressurized RCS using a constant, measured discharge flow from the normal RHR pumps. The RCS is maintained at a constant level above the top of the cold-leg balance line(s). The normal RHR system flow rate and the differential pressure across the cold leg balance lines are used to determine the acceptance criteria resistance of the balance lines. Verify proper operation of system valves. For additional details, see Staff Regulatory Guidance C.2.b. below.

(2) Flow Tests - Hot Conditions. The PCCS emergency makeup and boron makeup function is verified by the following test of the CMTs. During hot functional testing of the RCS, the CMT cold-leg balance line piping water temperature at various locations should be recorded to verify that the water in this line is sufficiently heated to initiate recirculation flow through the CMTs.

h. Passive Core Cooling System—Emergency Core Decay Heat Removal (AP1000)

(1) Flow Test—Hot Conditions. Testing should verify the PCCS emergency core decay heat removal function by testing of the passive RHR (PRHR) heat exchanger.

(a) During hot functional testing of the RCS, record the piping water temperature for the heat exchanger supply and return lines and verify that natural circulation flow initiates.

(b) Testing should verify the heat transfer capability of the PRHR heat exchanger while the RCS is being cooled from hot-shutdown conditions with the reactor coolant pumps not running. The heat transfer rate measured in the test should be adjusted to account for differences in the hot-leg and IRWST temperatures.

(c) Testing should verify proper operation of the PRHR heat exchanger and its heat transfer capability with every reactor coolant pump running. The heat transfer rate measured in the test should be adjusted to account for differences in the hot leg and IRWST temperatures.

2. Component Testing

The components of the systems involved in the system tests described in Staff Regulatory Guidance C.1. should be tested, either in conjunction with the system tests or by independent component tests. Components that are common to the ECCS and other systems should be tested according to whichever systems have the more stringent criteria. For the preoperational systems tests noted above, the component (e.g., pumps, valves, piping, etc.) tests are normally performed at the operating temperature and pressure conditions noted for each system test (e.g., preoperational flow tests - cold or hot conditions). If the component is not fully tested in the preoperational system test phase, then separate component or systems tests at the low power or power ascension test phase may be performed to fully test the component to demonstrate the satisfaction of the test acceptance criteria. For additional details on low power and power ascension tests, see RG 1.68. Performance data should be recorded and the following items should be verified:

a. Instrumentation

(1) Verify test acceptance criteria are met for operation of initiating instrumentation in various combinations of logic and instrument channel trip.

(2) Verify test acceptance criteria are met for functioning of instrumentation and alarms used to monitor system availability. Instruments and alarms should be calibrated and tested before plant startup.

b. Valves

(1) Verify test acceptance criteria are met for operation of system valves (e.g., power-operated valves and check valves), including response times with the applicable energy source (e.g., air/nitrogen supply or electric power source) at system flow, pressure, and temperature conditions as close to design as practical that allows analysis to demonstrate capability over the full range of operating conditions from normal operations to design basis accident conditions. Valve operation testing should include opening and closing valves with operating switches, valve status indication, and travel timing, if applicable. Verification of valve position should include a method that ensures the valve disk is in its proper position as well as proper control room indication. Verify valves open, close and throttle to their correct valve position and meet design, test and leakage acceptance criteria.

(2) With the exception of pyrotechnic-actuated (squib) valves that are addressed in (3) below, verify valve operation under maximum expected differential pressure and flow conditions (consistent with system test limitations) with evaluation of sufficient valve-specific diagnostic data to demonstrate that each valve is capable of performing its safety function over the full range of operating conditions from normal operations to design-basis accident conditions.

(3) Verify the capability of squib valves by initiating the actuator control circuitry for each valve to demonstrate acceptable electrical parameters with the charge removed from the

valve, by performing external and internal examinations for structural integrity and presence of foreign material and fluids, and by firing a sample of pyrotechnic charges from the valve population in a test fixture to demonstrate their design-basis capability. Verify that the squib valve receives a simulated signal at the valve electrical leads that is capable of actuating the valve. Verify, by analysis or other simulated test, that the squib valve flow resistance is consistent with the flow path resistance.

c. Pumps

(1) Proper operation of injection pumps and motors in all design operating modes.

(2) Verify that test acceptance criteria are met for available NPSH by monitoring acceptable pump performance under system flow, pressure and temperature conditions as close to design as practical that allows analysis to demonstrate capability over the full range of operating conditions from normal operation to design basis accident conditions to provide reasonable assurance that the NPSH requirements are satisfied during pump operation. Some indications of insufficient NPSH available might include erratic or decreasing pump motor current, erratic flow or flow less than expected due to vaporization, gas intrusion or flow blockage on the suction side of the pump, or frequent adjustments to the pump discharge valves to maintain a constant flow rate.

The test should also verify, by inspection, that no foreign material has entered into the pump to ensure that performance degradation does not occur and verify that there is no debris in the sump and the pump suction strainer is not clogged with debris so that pump failures or other system degradation does not occur. The inspection provides verification that foreign material/debris has not entered the system during construction and may involve inspecting and removing a temporary test strainer or inspecting and cleaning of a permanent pump suction strainer (if one is installed) and need not necessitate a pump disassembly.

(3) Verify test acceptance criteria are met for individual pump capacity and discharge head for the full range of pump operation, including minimum recirculation flow.

(4) Verify test acceptance criteria are met for pump response time (time to reach rated flow conditions) under voltage and frequency as close to design minimum values as practical.

(5) Verify test acceptance criteria are met for vibration levels. ASME Code for Operation and Maintenance of Nuclear Power Plants (OM Code) (Ref. 9) in Subsection ISTB, "In-service Testing of Pumps in Light-Water Reactor Nuclear Power Plants," as incorporated by reference in 10 CFR 50.55a, specifies preservice and inservice testing of pumps, including monitoring pump vibration in units of either pump displacement or pump velocity with acceptance criteria for both units of measurement. NUREG-1482, "Guidelines for Inservice Testing at Nuclear Power Plants," (Ref. 10) also provides guidance for pump vibration monitoring.

d. Motors

(1) Verify that test acceptance criteria are met for pump motor performance under system flow, pressure and temperature conditions as close to design as practical that allows analysis to demonstrate capability over the full range of operating conditions from normal operations to design basis accident conditions to provide reasonable assurance that the

NPSH requirements are satisfied by monitoring motor performance during pump operation. Some indications of insufficient NPSH available might include erratic or decreasing pump motor current.

(2) Verify that test acceptance criteria are met for pump motor start sequence, overspeed protection, and adequate margins between motor running currents and protective breaker ratings. RG 1.205, "Risk-Informed, Performance-Based Fire Protection for Existing Light-Water Nuclear Power Plants," (Ref. 11), Regulatory Position C.3.3, "Circuit Analysis," provides additional guidance for the coordination and testing of protective breakers to prevent thermal overload of electrical motors.

(3) Verify that test acceptance criteria are met for pump response time (time to reach rated flow conditions) under motor voltage and frequency as close to minimum design values as practical.

e. Controls

(1) Verify test acceptance criteria are met for operation of controls, including controls that transfer pump suction. The tests should also verify separately and independently each channel or bus to identify any failures or losses of redundancy. Testing should include all backup and redundant controls.

(2) Verify test acceptance criteria are met for operation of interlocks and equipment protective devices in pump and valve controls.

f. Power Supplies

(1) Verify test acceptance criteria are met for operation of normal and all alternative electric power supplies used for system valves, pumps, and motors, with analysis to confirm capability under degraded voltage and frequency.

(2) Verify test acceptance criteria are met for operation of automatic and manual power transfer switches.

g. System Piping and Supports

(1) Verify test acceptance criteria are met for system piping movements under system startup conditions and during steady-state operation. The ASME Boiler and Pressure Vessel (B&PV) Code, Section III, Subsections NB/NC/ND-3620, "Design Considerations," and NB/NC/ND 3622.3, "Vibration," (Ref. 12) provides a methodology for testing, monitoring, evaluating, and controlling piping system vibration.

(2) Verify test and examination criteria are met for dynamic restraints in the ECCS using the provisions in Subsection ISTD, "Preservice and Inservice Examination and Testing of Dynamic Restraints (snubbers) in Light-Water Reactor Nuclear Power Plants," of the ASME OM Code as incorporated by reference in 10 CFR 50.55a.

(3) To meet the requirements in 10 CFR 50, Appendix A, GDC 4, ECCS piping and piping support test acceptance criteria should include the dynamic effects associated with flow instabilities and loads (e.g., water hammer). NUREG-0927, "Evaluation of Water Hammer Occurrences in Nuclear Power Plants," (Ref.13), NUREG-0800, "Standard

Review Plan for the Review of Safety Analysis Reports for Nuclear Power Plants," (Ref. 14) SRP Sections 3.9.3, 5.4.6 and 5.4.7 provide guidance for meeting the ASME Boiler and Pressure Vessel Code, Section III design requirements for piping loads (including water hammer), and for preventing and mitigating water hammer in ECCS piping connected to the RCS. ECCS piping and piping support design features and operating experience should be provided to prevent water hammer damage caused by such mechanisms as voided lines.

3. Documentation

The preoperational testing program should be documented in a summary report and retained as part of the plant historical record. This summary report should include the following:

a. a listing and description of the objectives of each test;

b. a description of how each test was conducted;

c. the parameters monitored;

d. complete comparisons and evaluations against design predictions or system performance requirements for the HPSI flow tests, the MPSI flow tests, the LPSI flow and recirculation tests, the core flooding tests, the ELS flow and isolation tests, and the AP1000 PCCS safety injection tests, emergency makeup and boron makeup tests, and emergency core decay heat removal tests;

e. any discrepancies or deficiencies noted;

f. any unplanned actuations of ECCS due to design deficiencies, human errors, operational deficiencies and lessons learned from these events;

g. system modifications and corrective actions required;

h. appropriate justification for acceptance of systems or components not in conformance with design predictions or performance requirements;

i. any unexpected or unusual conditions during test observations; and

j. conclusions.

Retention of the test procedures, data, and summaries by the licensee should be consistent with paragraph 9 of Appendix C to RG 1.68 and in accordance with GDC 1, "Quality Standards and Records," of Appendix A and Criteria XI, "Test Control," and XVII, "Quality Assurance Records," of Appendix B to 10 CFR Part 50.

D. IMPLEMENTATION

The purpose of this section is to provide information on how applicants and licensees[3] may use this guide and information regarding the NRC's plans for using this RG. In addition, it describes how the NRC staff complies with 10 CFR 50.109, "Backfitting" and any applicable finality provisions in 10 CFR Part 52, "Licenses, Certifications, and Approvals for Nuclear Power Plants."

Use by Applicants and Licensees

Applicants and licensees may voluntarily[4] use the guidance in this document to demonstrate compliance with the underlying NRC regulations. Methods or solutions that differ from those described in this RG may be deemed acceptable if they provide sufficient basis and information for the NRC staff to verify that the proposed alternative demonstrates compliance with the appropriate NRC regulations. Current licensees may continue to use guidance the NRC found acceptable for complying with the identified regulations as long as their current licensing basis remains unchanged.

Licensees may use the information in this RG for actions that do not require NRC review and approval such as changes to a facility design under 10 CFR 50.59, "Changes, Tests, and Experiments." Licensees may use the information in this RG or applicable parts to resolve regulatory or inspection issues.

Use by NRC Staff

The NRC staff does not intend or approve any imposition or backfitting of the guidance in this RG. The NRC staff does not expect any existing licensee to use or commit to using the guidance in this RG, unless the licensee makes a change to its licensing basis. The NRC staff does not expect or plan to request licensees to voluntarily adopt this RG to resolve a generic regulatory issue. The NRC staff does not expect or plan to initiate NRC regulatory action which would require the use of this RG. Examples of such unplanned NRC regulatory actions include issuance of an order requiring the use of the RG, requests for information under 10 CFR 50.54(f) as to whether a licensee intends to commit to use of this RG, generic communication, or promulgation of a rule requiring the use of this RG without further backfit consideration.

During regulatory discussions on plant specific operational issues, the staff may discuss with licensees various actions consistent with staff positions in this RG, as one acceptable means of meeting the underlying NRC regulatory requirement. Such discussions would not ordinarily be considered backfitting even if prior versions of this RG are part of the licensing basis of the facility. However, unless this RG is part of the licensing basis for a facility, the staff may not represent to the licensee that the licensee's failure to comply with the positions in this RG constitutes a violation.

If an existing licensee voluntarily seeks a license amendment or change and (1) the NRC staff's consideration of the request involves a regulatory issue directly relevant to this new or revised RG and (2) the specific subject matter of this RG is an essential consideration in the staff's determination of the acceptability of the licensee's request, then the staff may request that the licensee either follow the guidance in this RG or provide an equivalent alternative process that demonstrates compliance with the

3 In this section, "licensees" refers to licensees of nuclear power plants under 10 CFR Parts 50 and 52; and "applicants," refers to applicants for licenses and permits for (or relating to) nuclear power plants under 10 CFR Parts 50 and 52, and applicants for standard design approvals and standard design certifications under 10 CFR Part 52.

4 In this section, "voluntary" and "voluntarily" mean that the licensee is seeking the action of its own accord, without the force of a legally binding requirement or an NRC representation of further licensing or enforcement action.

underlying NRC regulatory requirements. This is not considered backfitting as defined in 10 CFR 50.109(a)(1) or a violation of any of the issue finality provisions in 10 CFR Part 52.

Additionally, an existing applicant may be required to comply with new rules, orders, or guidance if 10 CFR 50.109(a)(3) applies.

If a licensee believes that the NRC is either using this RG or requesting or requiring the licensee to implement the methods or processes in this RG in a manner inconsistent with the discussion in this Implementation section, then the licensee may file a backfit appeal with the NRC in this RG in a manner inconsistent with the discussion in this Implementation section, then the licensee may file a backfit appeal with the NRC in accordance with the guidance in NUREG-1409, "Backfitting Guidelines," (Ref. 15) and the NRC Management Directive 8.4, "Management of Facility-Specific Backfitting and Information Collection" (Ref. 16).

GLOSSARY OF ACRONYMS

ADAMS - Agency Document Access and Management System

ADS – Automatic Depressurization System

AP1000 – Advanced Passive 1000

ASME - American Society of Mechanical Engineers

CFR – Code of Federal Regulations

CMT – Core makeup tank

ECCS – Emergency Core Cooling System

HPSI- High Pressure Safety Injection

IRWST – In- Containment Refueling Water Storage Tank

LOCA- Loss of Coolant Accident

LPSI- Low Pressure Safety Injection

MPSI – Mid Pressure Safety Injection

NFPA – National Fire Protection Association

OMB – Office of Management and Budget

PCCS – Passive Core Cooling System

PRHR – Passive Residual Heat Removal

PWR _ Pressured Water Reactor

RG – Regulatory Guide

RCS – Reactor Coolant System

RHR – Residual Heat Removal

SRP – Standard Review Plan

SSCs – Structures, Systems and Components

US EPR - United States Evolutionary Power Reactor

US APWR – United States Advanced PWR

US NRC – Unites States Nuclear Regulatory Commission

The following list of additional acronyms is used in Appendix A of this guide including acronyms used in Figures A.2-1, A.3-1, A.4-1 and A.4-2:

ACCU – Accumulator

ACCUM – Accumulator

ADS – Automatic Depressurization System

CL – Cold Leg

HL – Hot Leg

HX – Heat Exchanger

IRWST – Inside Refueling Water Storage Tank

LHSI – Low Head (Pressure) Safety Injection

M – Motor

MHSI–Mid Head (Pressure) Safety Injection

N2 – Nitrogen Gas

PRHR – Passive Residual Heat Removal

PXS– Passive Core Cooling System

RCP – Reactor Coolant Pump

REFERENCES[5]

1. *U. S. Code of Federal Regulations* (CFR) "Domestic Licensing of Production and Utilization Facilities," Part 50, Chapter 1, Title 10, "Energy."

2. CFR, Licenses, Certifications, and Approvals for Nuclear Power Plants," Part 52, Chapter 1, Title 10, "Energy."

3. U.S. Nuclear Regulatory Commission (NRC), Regulatory Guide (RG) 1.79, "Preoperational Testing of Emergency Core Cooling Systems for Pressurized Water Reactors," Washington, D.C.

4. International Atomic Energy Agency (IAEA) Safety Standard Series Safety Guide No. NS-G-1.9, "Design of the Reactor Coolant System and Associated Systems in Nuclear Power Plants," Vienna, Austria, 2004.[6]

5. NRC, RG 1.68, "Initial Test Programs for Water-Cooled Nuclear Power Plants," Washington, D.C.

6. NRC Regulatory Issue Summary (RIS) 2013-09, "NRC Endorsement of NEI 09-10, Revision 1a-A, 'Guidelines for Effective Prevention and Management of System Gas Accumulation,'" issued August 23, 2013, Washington, D.C. (ADAMS Accession No. ML13178A152)

7. Nuclear Energy Institute (NEI) report 09-10, Revision 1a-A, "Guidelines for Effective Prevention and Management of System Gas Accumulation," Project No. 689, April 2013.[7] (ADAMS Accession No. ML13136A129)

8. NRC, RG 1.82, "Water Sources for Long-Term Recirculation Cooling Following a Loss-of-Coolant Accident," Washington, D.C.

9. American Society of Mechanical Engineers (ASME) Code for Operation and Maintenance of Nuclear Power Plants (OM Code), Subsection ISTB, "In-service Testing of Pumps in Light-Water Reactor Nuclear Power Plants," New York, NY. [8]

10. NRC, NUREG-1482, "Guidelines for Inservice Testing at Nuclear Power Plants," Washington DC. (ADAMS Accession No. ML112231412)

---

5 Publicly available NRC published documents are available electronically through the NRC Library on the NRC's public Web site at: http://www.nrc.gov/reading-rm/doc-collections/. The documents can also be viewed on-line or printed for a fee in the NRC's Public Document Room (PDR) at 11555 Rockville Pike, Rockville, MD; the mailing address is USNRC PDR, Washington, DC 20555; telephone (301) 415-4737 or (800) 397-4209; fax (301) 415-3548; and e-mail pdr.resource@nrc.gov.

6 Copies of International Atomic Energy Agency (IAEA) documents may be obtained through their Web site: WWW.IAEA.Org/ or by writing the International Atomic Energy Agency P.O. Box 100 Wagramer Strasse 5, A-1400 Vienna, Austria. Telephone (+431) 2600-0, Fax (+431) 2600-7, or E-Mail at Official.Mail@IAEA.Org

7 Publications from the Nuclear Energy Institute (NEI) are available at their Web site: http://www.nei.org/ or by contacting the headquarters at Nuclear Energy Institute, 1776 I Street NW, Washington DC 20006-3708, Phone: 202-739-800, Fax 202-785-4019.

8 Copies of American Society of Mechanical Engineers (ASME) standards may be purchased from ASME, Three Park Avenue, New York, NY 10016-5990; telephone (800) 843-2763. Purchase information is available through the ASME Web-based store at http://www.asme.org/Codes/Publications/.

11. NRC, RG 1.205, “Risk-Informed, Performance-Based Fire Protection for Existing Light-Water Nuclear Power Plants,” Washington, D.C.

12. ASME Boiler and Pressure Vessel (B&PV) Code, Section III, Section NB/NC/ND-3620, “Design Considerations,” NB/NC/ND-3622.3, “Vibration,” New York, NY.

13. NRC, NUREG-0927, “Evaluation of Water Hammer Occurrences in Nuclear Power Plants,” Washington, D.C. (ADAMS Accession No. ML071030267) (non-public)

14. NRC, NUREG-0800, “Standard Review Plan for the Review of Safety Analysis Reports for Nuclear Power Plants,” (SRP) Sections 3.9.3, 5.4.6 and 5.4.7. Washington, D.C.

15. NRC, NUREG-1409, “Backfitting Guidelines,” July 1990, Washington, D.C.

16. NRC, Management Directive (MD) 8.4, “Management of Facility-Specific Backfitting and Information Collection,” NRC, Washington, D.C.

BIBLIOGRAPHY

U.S. Nuclear Regulatory Commission Documents

Generic Letters

GL 85-22, "Potential for Loss of Post-LOCA Recirculation Capability Due to Insulation Debris Blockage," December 3, 1985. (ADAMS Accession No. ML031150731)

GL 98-04, "Potential for Degradation of the Emergency Core Cooling System and the Containment Spray System after a Loss-of Coolant Accident Because of Construction and Protective Coating Deficiencies and Foreign Material in Containment," July 14, 1998. (ADAMS Accession No. ML031110081)

GL 2004-02, "Potential Impact of Debris Blockage on Emergency Recirculation during Design Basis Accidents at Pressurized-Water Reactors, September 13, 2004." (ADAMS Accession No. ML042360586)

GL 2008-01, "Managing Gas Accumulation in Emergency Core Cooling, Decay Heat Removal, and Containment Spray Systems," January 11, 2008. (ADAMS Accession No. ML072910759)

Information Notices

IN 92-85, "Potential Failures of Emergency Core Cooling Systems Caused by Foreign Material Blockage," December 23, 1992. (ADAMS Accession No. ML031190717)

IN 93-34, "Potential for Loss of Emergency Cooling Function Due to a Combination of Operational and Post-LOCA Debris in Containment," April 26, 1993 (ADAMS Accession No. ML031070498)

IN 93-34, Supplement 1, "Potential for Loss of Emergency Cooling Function Due to a Combination of Operational and Post-LOCA Debris in Containment," May 6, 1993. (ADAMS Accession No. ML031210149)

IN 94-57, "Debris in Containment and the Residual Heat Removal System," August 12, 1994. (ADAMS Accession No. ML031060503)

IN 96-10, "Potential Blockage by Debris of Safety System Piping Which Is Not Used During Normal Operation or Tested during Surveillances," February 13, 1996. (ADAMS Accession No. ML031060270)

IN 97-76, "Degraded Throttle Valves in Emergency Core Cooling System Resulting from Cavitation-Induced Erosion during a Loss-of-Coolant Accident," October 30, 1997. (ADAMS Accession No. ML031050058)

IN 2006-20, "Foreign Material Found in the Emergency Core Cooling System," October 16, 2006. (ADAMS Accession No. ML062440467)

IN 2006-21, "Operating Experience Regarding Entrainment of Air into Emergency Core Cooling and Containment Spray Systems," September 21, 2006. (ADAMS Accession No. ML062570468)

Bulletins

Bulletin 93-02, "Debris Plugging of Emergency Core Cooling Suction Strainers," May 11, 1993. (ADAMS Accession No. ML031190684)

Licensee Event Reports

LER 50-323/1999-003-00, "Entry into Technical Specification 3.0.3 Due to Voiding in the Emergency Core Cooling System Caused by Inadequate Administrative Controls," November 24, 1999. (ADAMS Accession No. ML993400278)

LER 50-315/1999-013-01, "Safety Injection and Centrifugal Charging Throttle Valve Cavitation during LOCA Could Lead to ECCS Pump Failure," February 8, 2001. (ADAMS Accession No. ML010450136)

LER 50-413/2000-00,"Bypssed Compensatory Action on ECCS Pump Area Sump Pumps Caused Plant to be in a Condition Outside the Design Basis," February 10, 2000. (ADAMS Accession Number ML003693862)

LER 50-529/2000-003-00, "ECCS Surveillance Requirement Not Met Due to Inadequate Procedure," September 27, 2000. (ADAMS Accession No. ML003756884)

LER 50-311/2004-009, "ECCS Leakage Outside Containment Exceeds Dose Analysis Limits (23 Charging Pump)," October 13, 2004. (ADAMS Accession No. ML043570456)

LER 50-529/530/2005-005, "TS Required Reactor Shutdown—Limiting Condition for Operation 3.0.3 A, Inoperable ECCS, Containment Spray, and Refueling Water Tank," December 8, 2005. (ADAMS Accession No. ML053540220).

LER 50-301/2005-006, "Calculation Error in Model for ECCS Long Term Cooling," November 8, 2005. (ADAMS Accession N0. ML060230056)

APPENDIX A

EMERGENCY CORE COOLING SYSTEMS DESIGN DESCRIPTIONS

A.1 Emergency Core Cooling Systems for Current Pressurized-Water Reactors

The emergency core cooling system (ECCS) for the current fleet of PWRs uses a high-pressure safety injection (HPSI) system except for two four-loop Westinghouse PWRs that use a medium-pressure safety injection (MPSI) system. The ECCS for the current fleet of PWRs also uses core flooding and a low-pressure safety injection (LPSI) system.

A.2 U.S. Advanced Pressurized-Water Reactor Safety Injection System

The U.S. Advanced Pressurized-Water Reactor (US-APWR) ECCS consists of the safety injection system (SIS) (Figure A.2-1), which includes the high-pressure injection system, the accumulator system, and the emergency letdown system.

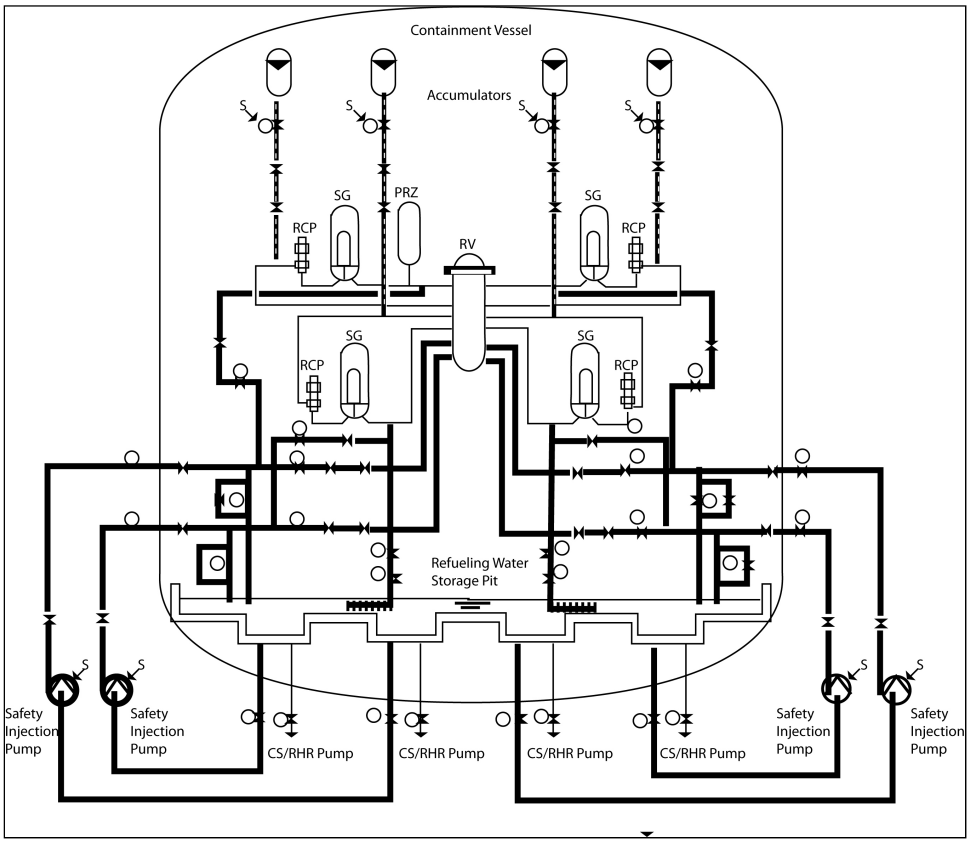

Figure A.2-1. US-APWR Safety Injection System

The ECCS is designed to perform the following major safety-related functions:

a. safety injection,
b. safe shutdown, and
c. containment pH control.

These functions are provided by safety-related equipment with redundancy to deal with single failure, environmental qualification, and protection from external hazards.

The ECCS automatically initiates with redundancy sufficient to ensure that these functions are accomplished, even in the unlikely event of the most limiting single failure occurring coincident with, or during, the event.

The SIS, in conjunction with the rapid insertion of the control rod cluster assemblies (reactor scram), provides protection during the following events:

a. loss-of-coolant accident (LOCA),
b. ejection of a control rod cluster assembly,
c. secondary steam system piping failure,
d. inadvertent opening of main steam relief or safety valve, and
e. steam generator tube rupture.

A.3 U.S. Evolutionary Power Reactor Safety Injection System

The ECCS for the U.S. Evolutionary Power Reactor (U.S. EPR) is the SIS (Figure A.3-1).

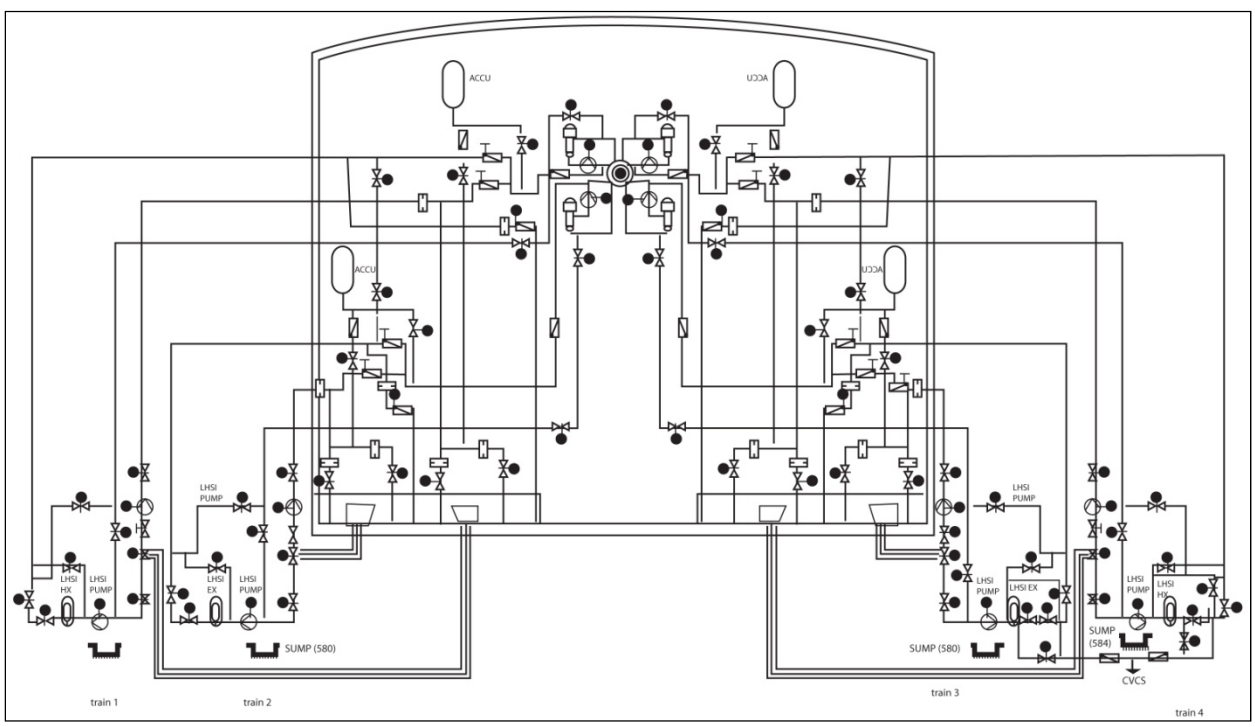

Figure A.3-1. U.S. EPR Safety Injection System

The SIS consists of four independent trains, designated trains 1, 2, 3, and 4, one supplying each reactor coolant loop. The four trains are separated into four safety divisions and are functionally identical. Each SIS train has separate MPSI and LPSI pump trains and an accumulator injection train. The MPSI and LPSI pump trains share an isolable suction line from the in-containment refueling water storage tank (IRWST). This three-way valve aligns the IRWST to both the MPSI and LPSI pump suctions when in the open position. The LPSI pump train includes a heat exchanger and a suction line from the reactor coolant system (RCS) hot leg for residual heat removal, which can be realigned for LPSI hot-leg injection. The discharge lines for all three MPSI, LPSI, and accumulator injection trains branch together to share an injection nozzle on their associated RCS cold leg.

Cross-connects between trains 1 and 2 and between trains 3 and 4, which are normally isolated by two motor-operated valves in series to maintain train separation, allows removal of individual trains from service for maintenance. Each cross-connect provides an alternate injection path for the train that remains in service. This configuration mitigates the effect of degraded safety injection caused by steam entrainment during a LOCA, when the only available LPSI connection (considering one is unavailable because of a single failure, another is out for maintenance, and another train feeds the broken loop) is adjacent to the broken leg. During such maintenance activities, the motor-operated valves for both cross-connects are secured open (breakers racked out) for protection against active single failures.

The component cooling water system is the cooling medium for the LPSI heat exchangers (all four trains), the MPSI pump motor coolers (all four trains), and the LPSI pump motor and seal coolers for trains 2 and 3. The safety chilled water system is the cooling medium for the LPSI pump motor and seal coolers for trains 1 and 4. The essential service water system serves as the final cooling medium, rejecting the heat transferred from the component cooling water system to the ultimate heat sink.

Electrical divisions 1 through 4 power the four SIS trains, respectively. Each electrical division is a separate and independent power supply housed and protected in its own shield building. Its assigned emergency diesel generator in the event of a loss of offsite power supplies each electrical division.

A.4 AP1000 Passive Core Cooling System

The ECCS for the AP1000 is the passive core cooling system (PCCS). The primary function of the PCCS is to provide emergency core cooling after postulated design-basis events. To accomplish this primary function, the PCCS is designed to perform the functions described in the following sections.

A.4.1 Safety Injection System

Figure A.4-1 shows the SIS, which provides safety injection to the RCS to provide adequate core cooling for the complete range of LOCAs, up to and including the double-ended rupture of the largest primary loop RCS piping.

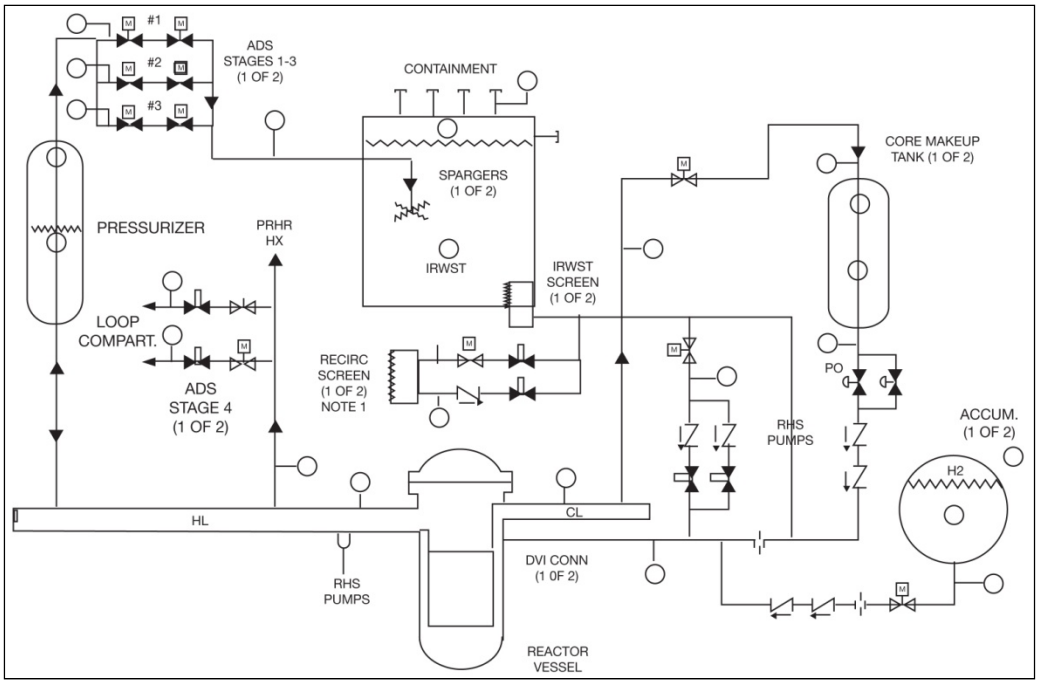

Figure A.4-1. AP1000 Passive Safety Injection System of the PCCS

A.4.2 Emergency Core Decay Heat Removal System

Figure A.4-2 shows the system that provides core decay heat removal during transients, accidents, or whenever normal heat removal paths are lost. This heat removal function is available for RCS conditions, including shutdowns. During refueling operations, when the IRWST is drained into the refueling cavity, other passive means of core decay heat removal are used.

A.4.3 Reactor Coolant System Emergency Makeup and Boration

This function provides RCS makeup and boron makeup during transients or accidents, when the normal RCS makeup supply from the chemical and volume control system is unavailable or is insufficient.

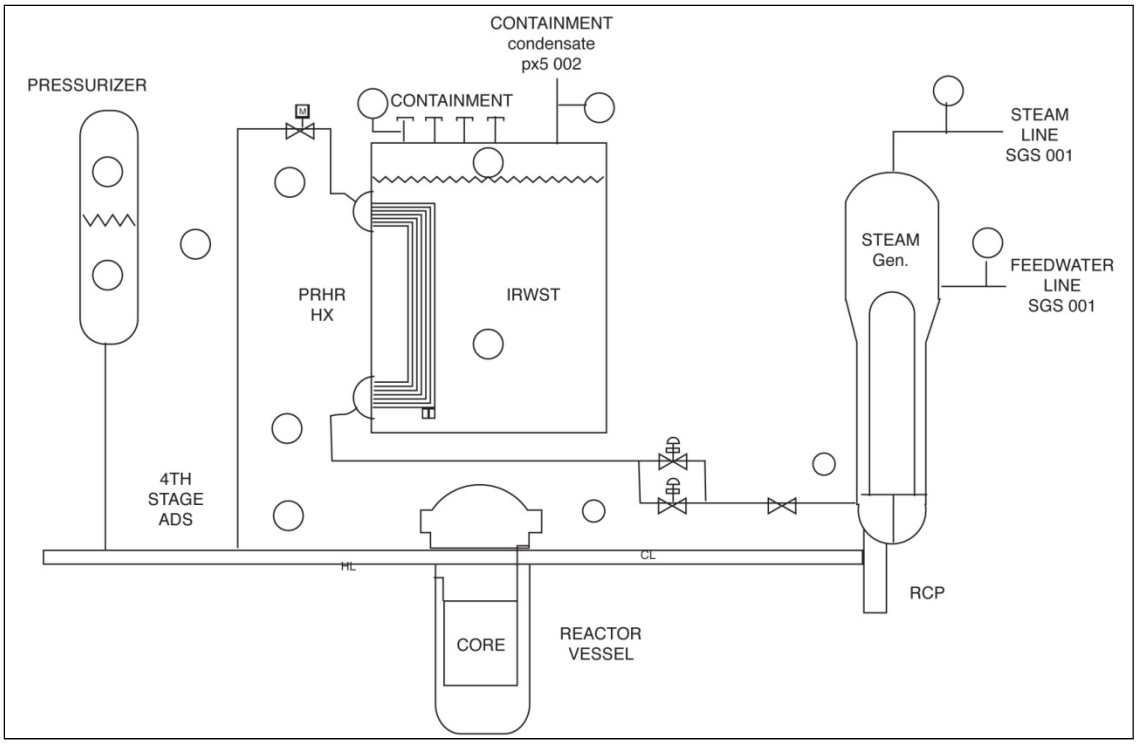

Figure A.4-2. AP1000 Passive Decay Heat Removal System of the PCCS

A.4.4 <u>Containment pH Control</u>

This function provides chemical addition during post-accident conditions to establish chemistry control of the water covering the core. This ensures that highly radioactive compounds do not evolve from the fuel cladding and prevents corrosion of containment equipment during long-term post-accident conditions.

The PCCS is designed to operate without the use of active equipment such as pumps and alternating current power sources. The PCCS depends on reliable passive components and processes, such as gravity injection and the expansion of compressed gases. The PCCS does require a one-time alignment of valves on actuation of the specific components.