U.S.NRC
UNITED STATES NUCLEAR REGULATORY COMMISSION
Protecting People and the Environment

Enhancing the Technical and Regulatory Bases for Extended Storage and Transportation of Spent Nuclear Fuel

December 14, 2011

James Rubenstone
Office of Nuclear Material Safety and Safeguards

U.S.NRC
UNITED STATES NUCLEAR REGULATORY COMMISSION
Protecting People and the Environment

Background

Regulating Extended Spent Fuel Storage and Transportation: Needs

- Potential changes to regulations and guidance
- Opportunity to improve integration of regulations and guidance governing the back end of the fuel cycle
- Development and application of risk-informed regulatory approaches

Regulating Extended Spent Fuel Storage and Transportation: Approach

- Enhance technical basis for regulating extended storage of spent nuclear fuel
  - Identify technical issues associated with long-term storage
  - Perform focused research on technical issues of regulatory significance
- Identify regulatory framework revisions needed
- As appropriate,
  - revise regulations
  - develop or revise guidance
  - develop staff capabilities

Regulating Extended Spent Fuel Storage and Transportation: Plans

- Phase 1: Identify technical and regulatory issues associated with extended spent fuel storage
- Phase 2: Perform focused research on technical issues and develop regulatory options as needed
- Phase 3: Regulatory framework revisions

Regulating Extended Spent Fuel Storage and Transportation: Timelines

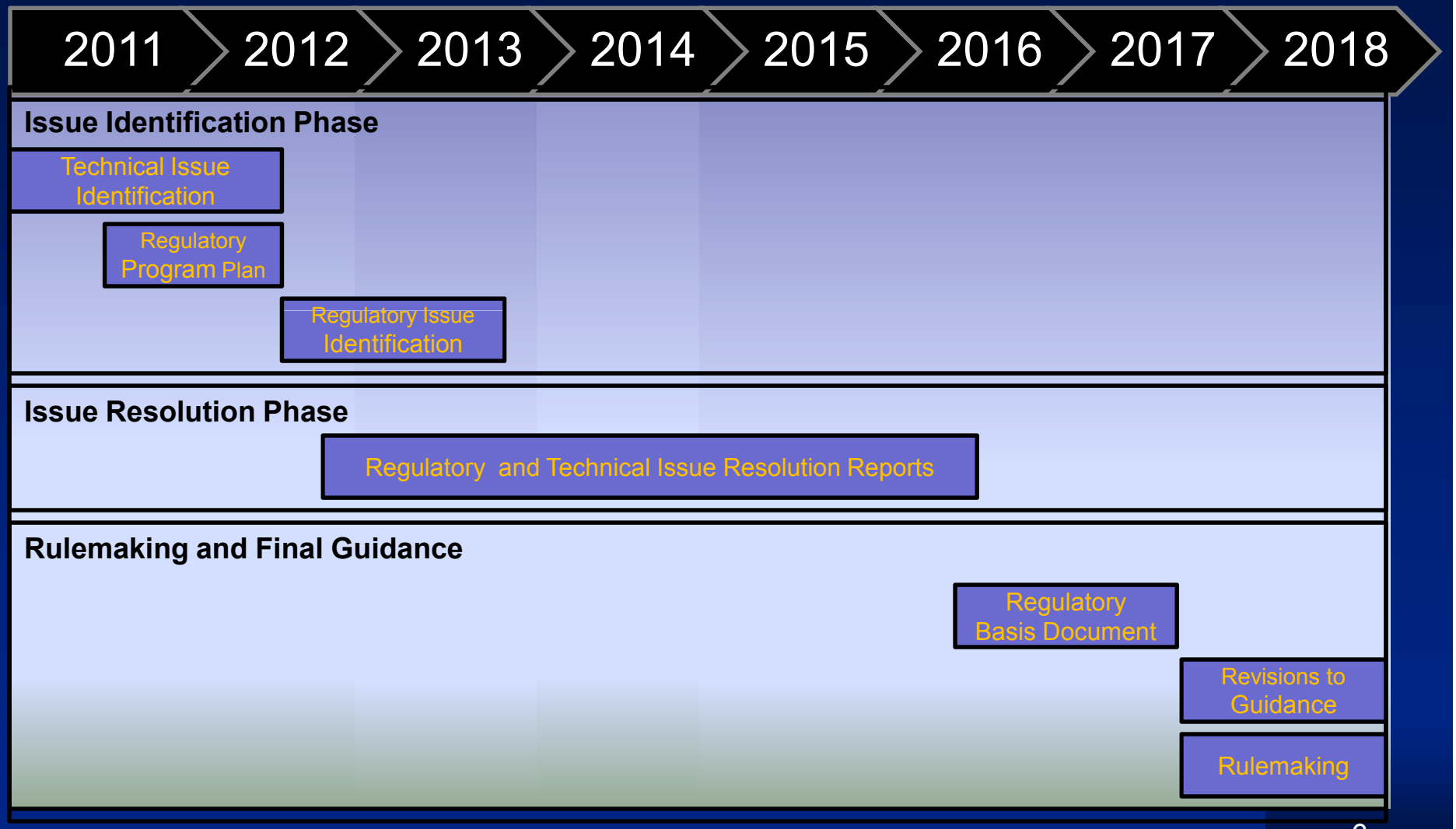

Extended Spent Fuel Storage and Transportation: Technical Issues Identification

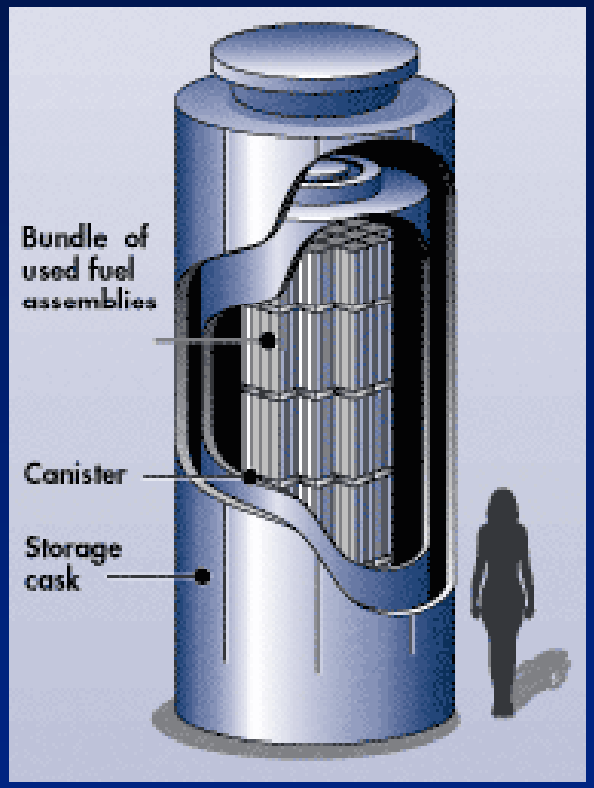

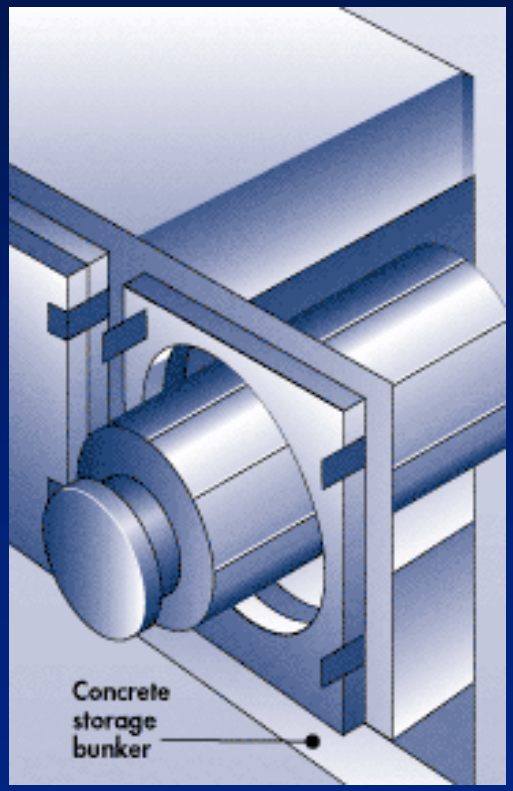

Potential Technical Issues

Cladding Integrity

- Safety Functions
  - Confinement (fission product barrier)
  - Physical integrity (retrievability and geometry control for criticality)

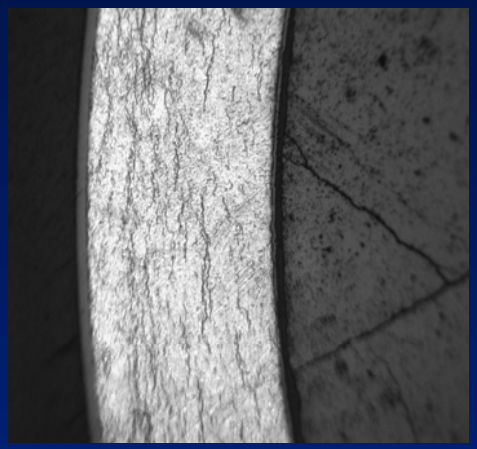

- Technical Challenges
  - Higher burnup levels
  - Temperature effects
  - New cladding types
  - In-situ monitoring in sealed canisters

Potential Technical Issues
Canister Integrity

- Safety Functions
  - Confinement
  - Criticality control

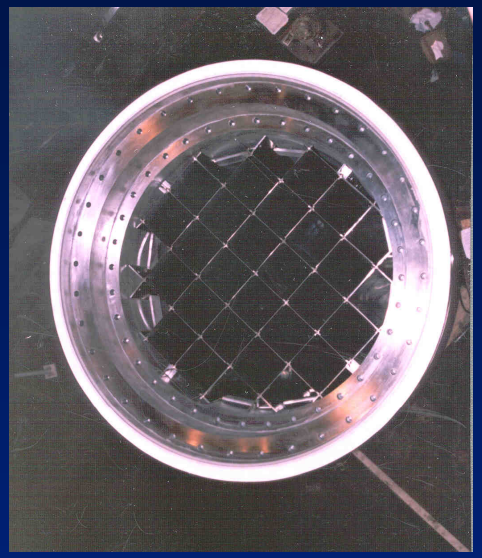

- Technical Challenges
  - Long-term corrosion
  - Basket properties
  - Absorber efficiency
  - Monitoring sealed internals

Potential Technical Issues
Overpack Performance

- Safety Functions
  - Shielding
  - Heat transfer

- Technical Challenges
  - Long-term degradation
  - Response to external natural events and external disruption

Current NRC Regulatory Framework for Storage

- Renewable Term Licenses
- Aging Management Plan
  - Time-limited aging analyses
  - Design for prevention
  - Monitoring
  - Maintenance
  - Corrective Actions

Potential Regulatory Issues

- Storage, transportation, and disposal integration
- Long term cladding integrity and retrievability
- Financial assurance issues

Regulating Extended Spent Fuel Storage and Transportation: Stakeholder Engagement Strategies

- Status Updates
- Reports for Comment
- Annual Meetings and Workshops

Summary

- Assuring safety and security as changes occur in the national strategy by developing predictable regulatory programs
- NRC is preparing to
  - develop a regulatory framework to better support long-term dry storage
  - coordinate EST technical basis work with environmental impact analysis for long-term update of Waste Confidence
- Opportunities for stakeholder input through public meetings, workshops, and draft reports