LICENSE RENEWAL APPLICATION

Hope Creek Generating Station

Facility Operating License No. NPF-57

This Page Intentionally Left Blank

TABLE OF CONTENTS

SECTION 1

Administrative Information

1.0 ADMINISTRATIVE INFORMATION 1-1

1.1 GENERAL INFORMATION – 10 CFR 54.19 1-1
1.1.1 Name of Applicant 1-1
1.1.2 Address of Applicant 1-1
1.1.3 Descriptions of Business or Occupation of Applicant 1-1
1.1.4 Descriptions of Organization and Management of Applicant 1-1
1.1.5 Class of License, Use of the Facility, and Period of Time for Which the License Is Sought 1-2
1.1.6 Earliest and Latest Dates for Alterations, If Proposed 1-2
1.1.7 Restricted Data 1-3
1.1.8 Regulatory Agencies 1-3
1.1.9 Local News Publications 1-3
1.1.10 Conforming Changes To Standard Indemnity Agreement 1-4

1.2 GENERAL LICENSE INFORMATION 1-5
1.2.1 Application Updates, Renewed Licenses, and Renewal Term Operation 1-5
1.2.2 Contact Information 1-5

1.3 PURPOSE 1-6

1.4 DESCRIPTION OF THE PLANT 1-6

1.5 APPLICATION STRUCTURE 1-7

1.6 ACRONYMS 1-10

1.7 GENERAL REFERENCES 1-14

SECTION 2

SCOPING AND SCREENING METHODOLOGY FOR IDENTIFYING STRUCTURES AND COMPONENTS SUBJECT TO AGING MANAGEMENT REVIEW, AND IMPLEMENTATION RESULTS

2.0 SCOPING AND SCREENING METHODOLOGY FOR IDENTIFYING STRUCTURES AND COMPONENTS SUBJECT TO AGING MANAGEMENT REVIEW, AND IMPLEMENTATION RESULTS 2.0-1

2.1 SCOPING AND SCREENING METHODOLOGY 2.1-1

2.1.1 Introduction 2.1-1
2.1.2 Information Sources Used for Scoping and Screening 2.1-4
2.1.3 Technical Basis Documents 2.1-5
2.1.4 Interim Staff Guidance Discussion 2.1-14
2.1.5 Scoping Procedure 2.1-16
2.1.6 Screening Procedure 2.1-25
2.1.7 Generic Safety Issues 2.1-31
2.1.8 Conclusion 2.1-32

2.2 PLANT LEVEL SCOPING RESULTS 2.2-1

2.3 SCOPING AND SCREENING RESULTS: MECHANICAL 2.3-1

2.3.1 Reactor Vessel, Internals, and Reactor Coolant System 2.3-1

2.3.1.1 Control Rods 2.3-2
2.3.1.2 Fuel Assemblies 2.3-5
2.3.1.3 Nuclear Boiler Instrumentation 2.3-8
2.3.1.4 Reactor Internals 2.3-14
2.3.1.5 Reactor Pressure Vessel 2.3-20
2.3.1.6 Reactor Recirculation System 2.3-25

2.3.2 Engineered Safety Features Systems 2.3-31

2.3.2.1 Automatic Depressurization System (ADS) 2.3-32
2.3.2.2 Containment Hydrogen Recombiner System 2.3-36
2.3.2.3 Core Spray System 2.3-40
2.3.2.4 Filtration, Recirculation, and Ventilation System 2.3-45
2.3.2.5 High Pressure Coolant Injection (HPCI) System 2.3-49
2.3.2.6 Hydrogen and Oxygen Analyzer System 2.3-56
2.3.2.7 Reactor Core Isolation Cooling (RCIC) System 2.3-60
2.3.2.8 Residual Heat Removal (RHR) System 2.3-67
2.3.2.9 Vacuum Relief Valve System 2.3-74

2.3.3 Auxiliary Systems 2.3-78

2.3.3.1 Chilled Water System 2.3-79

2.3.3.2 Closed Cycle Cooling Water System 2.3-84
2.3.3.3 Compressed Air System 2.3-95
2.3.3.4 Containment Inerting and Purging System 2.3-102
2.3.3.5 Control Area Chilled Water System 2.3-108
2.3.3.6 Control Rod Drive System 2.3-114
2.3.3.7 Control Room and Control Area HVAC Systems 2.3-120
2.3.3.8 Cranes & Hoists 2.3-126
2.3.3.9 Equipment and Floor Drainage System 2.3-130
2.3.3.10 Fire Protection System 2.3-136
2.3.3.11 Fire Pump House Ventilation System 2.3-143
2.3.3.12 Fresh Water Supply System 2.3-147
2.3.3.13 Fuel Handling and Storage System 2.3-151
2.3.3.14 Fuel Pool Cooling and Cleanup System 2.3-155
2.3.3.15 Hardened Torus Vent System 2.3-161
2.3.3.16 Hydrogen Water Chemistry System 2.3-165
2.3.3.17 Leak Detection and Radiation Monitoring System 2.3-170
2.3.3.18 Makeup Demineralizer System 2.3-177
2.3.3.19 Primary Containment Instrument Gas System 2.3-181
2.3.3.20 Primary Containment Leakage Rate Testing System 2.3-187
2.3.3.21 Process and Post-Accident Sampling Systems 2.3-193
2.3.3.22 Radwaste System 2.3-200
2.3.3.23 Reactor Building Ventilation System 2.3-205
2.3.3.24 Reactor Water Cleanup System 2.3-213
2.3.3.25 Remote Shutdown Panel Room HVAC System 2.3-220
2.3.3.26 Service Water Intake Ventilation System 2.3-223
2.3.3.27 Service Water System 2.3-227
2.3.3.28 Standby Diesel Generator Area Ventilation Systems 2.3-233
2.3.3.29 Standby Diesel Generators and Auxiliary Systems 2.3-240
2.3.3.30 Standby Liquid Control System 2.3-247
2.3.3.31 Torus Water Cleanup System 2.3-252
2.3.3.32 Traversing Incore Probe System 2.3-256

2.3.4 Steam and Power Conversion Systems 2.3-261

2.3.4.1 Condensate Storage and Transfer System 2.3-262
2.3.4.2 Feedwater System 2.3-268
2.3.4.3 Main Condenser System 2.3-274
2.3.4.4 Main Steam System 2.3-278

2.4 SCOPING AND SCREENING RESULTS: STRUCTURES 2.4-1

2.4.1 Auxiliary Boiler Building 2.4-2
2.4.2 Auxiliary Building Control/Diesel Generator Area 2.4-5
2.4.3 Auxiliary Building Service/Radwaste Area 2.4-10
2.4.4 Component Supports Commodity Group 2.4-16
2.4.5 Fire Water Pump House 2.4-21
2.4.6 Piping and Component Insulation Commodity Group 2.4-24
2.4.7 Primary Containment 2.4-27
2.4.8 Reactor Building 2.4-33
2.4.9 Service Water Intake Structures 2.4-41
2.4.10 Shoreline Protection and Dike 2.4-47

2.4.11 Switchyard 2.4-50
2.4.12 Turbine Building 2.4-53
2.4.13 Yard Structures 2.4-58

2.5 SCOPING AND SCREENING RESULTS: ELECTRICAL AND INSTRUMENTATION AND CONTROLS (I&C) SYSTEMS 2.5-1

2.5.1 Electrical/I&C Component Commodity Groups 2.5-1

2.5.2 Electrical Component Commodity Groups 2.5-3

2.5.2.1 Identification of Electrical Commodity Groups 2.5-3
2.5.2.2 Application of Screening Criterion 10 CFR 54.21(a)(1)(i) to the Electrical Component Commodity Groups 2.5-4
2.5.2.3 Elimination of Electrical Component Commodity Groups With No License Renewal Intended Functions 2.5-4
2.5.2.4 Application of Screening Criterion 10 CFR 54.21(a)(1)(ii) to Electrical Component Commodity Groups 2.5-5
2.5.2.5 Electrical Component Commodity Groups Subject to Aging Management Review 2.5-5
2.5.2.5.1 Cable Connections – Metallic Parts 2.5-5
2.5.2.5.2 Electrical Penetrations 2.5-6
2.5.2.5.3 Fuse Holders 2.5-6
2.5.2.5.4 High Voltage Insulators 2.5-6
2.5.2.5.5 Insulated Cables and Connections 2.5-6
2.5.2.5.6 Metal Enclosed Bus 2.5-7
2.5.2.5.7 Switchyard Bus and Connections, Transmission Conductors and Connections 2.5-7

SECTION 3

AGING MANAGEMENT REVIEW RESULTS

3.0 AGING MANAGEMENT REVIEW RESULTS 3.0-1

3.1 AGING MANAGEMENT OF REACTOR VESSEL, INTERNALS AND REACTOR COOLANT SYSTEMS 3.1-1

3.1.1 Introduction 3.1-1
3.1.2 Results 3.1-1

3.1.2.1 Materials, Environments, Aging Effects Requiring Management and Aging Management Programs 3.1-1

3.1.2.2 AMR Results for Which Further Evaluation is Recommended by the GALL Report 3.1-6

3.1.2.3 Time-Limited Aging Analyses 3.1-12

3.1.3 Conclusion 3.1-12

3.2 AGING MANAGEMENT OF ENGINEERED SAFETY FEATURES 3.2-1

3.2.1 Introduction 3.2-1
3.2.2 Results 3.2-1

3.2.2.1 Materials, Environments, Aging Effects Requiring Management and Aging Management Programs 3.2-2

3.2.2.2 AMR Results for Which Further Evaluation is Recommended by the GALL Report 3.2-12

3.2.2.3 Time-Limited Aging Analyses 3.2-18

3.2.3 Conclusion 3.2-18

3.3 AGING MANAGEMENT OF AUXILIARY SYSTEMS 3.3-1

3.3.1 Introduction 3.3-1
3.3.2 Results 3.3-2

3.3.2.1 Materials, Environments, Aging Effects Requiring Management and Aging Management Programs 3.3-4

3.3.2.2 AMR Results for Which Further Evaluation is Recommended by the GALL Report 3.3-38

3.3.2.3 Time-Limited Aging Analyses 3.3-54

3.3.3 Conclusion 3.3-54

3.4 AGING MANAGEMENT OF STEAM AND POWER CONVERSION SYSTEM 3.4-1

3.4.1 Introduction 3.4-1
3.4.2 Results 3.4-1

3.4.2.1 Materials, Environments, Aging Effects Requiring Management and Aging Management Programs 3.4-1

3.4.2.2 AMR Results for Which Further Evaluation is Recommended by the GALL Report 3.4-6

3.4.2.3 Time-Limited Aging Analyses 3.4-12

3.4.3 Conclusion 3.4-12

3.5 AGING MANAGEMENT OF CONTAINMENTS, STRUCTURES, AND COMPONENT SUPPORTS 3.5-1

3.5.1 Introduction 3.5-1
3.5.2 Results 3.5-1

3.5.2.1 Materials, Environments, Aging Effects Requiring Management and Aging Management Programs 3.5-2

3.5.2.2 AMR Results for Which Further Evaluation is Recommended by the GALL Report 3.5-20

3.5.2.3 Time-Limited Aging Analyses 3.5-40

3.5.3 Conclusion 3.5-40

3.6 AGING MANAGEMENT OF ELECTRICAL AND I&C 3.6-1

3.6.1 Introduction 3.6-1
3.6.2 Results 3.6-1

3.6.2.1 Materials, Environments, Aging Effects Requiring Management And Aging Management Programs 3.6-1

3.6.2.2 AMR Results for Which Further Evaluation is Recommended by the GALL Report 3.6-6

3.6.2.3 AMR Results Not Consistent With or Not Addressed in the GALL Report 3.6-12

3.6.3 Conclusion 3.6-14

SECTION 4

TIME-LIMITED AGING ANALYSES

4.0 TIME-LIMITED AGING ANALYSES 4-1

4.1 INTRODUCTION 4-1

4.1.1 Identification of TLAAs 4-1
4.1.2 Identification of Exemptions 4-3
4.1.3 Summary of Results 4-3

4.2 NEUTRON EMBRITTLEMENT OF THE REACTOR PRESSURE VESSEL AND INTERNALS 4-6

4.2.1 Reactor Pressure Vessel Materials Upper-Shelf Energy Reduction Due to Neutron Embrittlement 4-8
4.2.2 Adjusted Reference Temperature for Reactor Pressure Vessel Materials Due to Neutron Embrittlement 4-11
4.2.3 Reactor Pressure Vessel Analyses: Pressure - Temperature Limits 4-14
4.2.4 Reactor Pressure Vessel Circumferential Weld Examination Relief 4-15
4.2.5 Reactor Pressure Vessel Axial Weld Failure Probability 4-18
4.2.6 Reactor Pressure Vessel Core Reflood Thermal Shock Analysis 4-20
4.2.7 Reactor Internals Components 4-21

4.3 METAL FATIGUE OF THE REACTOR PRESSURE VESSEL, INTERNALS, AND REACTOR COOLANT PRESSURE BOUNDARY PIPING AND COMPONENTS 4-22

4.3.1 Reactor Pressure Vessel Fatigue Analyses 4-22
4.3.2 Reactor Pressure Vessel Internals Fatigue Analyses 4-29
4.3.3 Reactor Coolant Pressure Boundary Piping And Component Fatigue Analyses 4-30
4.3.4 Non-Class I Component Fatigue Analyses 4-35
4.3.5 Effects of Reactor Coolant Environment on Fatigue Life of Components and Piping (Generic Safety Issue 190) 4-36

4.4 ENVIRONMENTAL QUALIFICATION OF ELECTRICAL EQUIPMENT 4-39

4.5 LOSS OF PRESTRESS IN CONCRETE CONTAINMENT TENDONS 4-42

4.6 CONTAINMENT LINER PLATE, METAL CONTAINMENTS, AND PENETRATIONS FATIGUE ANALYSES 4-43

4.6.1 Fatigue Analysis of Primary Containment, Attached Piping, and Components 4-43
4.6.2 Primary Containment Process Penetrations and Bellows Fatigue Analysis 4-47
4.6.3 Vent Line Bellows 4-48

4.7 OTHER PLANT-SPECIFIC TIME LIMITED AGING ANALYSES 4-49

4.7.1 Crane Load Cycle Limit 4-49
4.7.2 Refueling Bellows Fatigue 4-50
4.7.3 Neutron Fluence-Induced Bolt Stress Relaxation - Jet Pump Auxiliary Spring Wedges and Slip Joint Clamps 4-51

4.8 REFERENCES 4-53

List of Appendices

APPENDIX A – UFSAR SUPPLEMENT

APPENDIX B – AGING MANAGEMENT PROGRAMS

APPENDIX C – RESPONSE TO BWRVIP APPLICANT ACTION ITEMS

APPENDIX D – TECHNICAL SPECIFICATION CHANGES (Not Used)

APPENDIX E – ENVIRONMENTAL REPORT FOR HOPE CREEK NUCLEAR GENERATING STATION

List of Tables

Table 2.1-1 Passive Structure and Component Intended Function Definitions 2.1-29

Table 2.2-1 Plant Level Scoping Results 2.2-2

Table 2.3.1-1 Components Subject to Aging Management Review - Control Rods 2.3-4
Table 2.3.1-2 Components Subject to Aging Management Review - Fuel Assemblies... 2.3-7
Table 2.3.1-3 Components Subject to Aging Management Review - Nuclear Boiler Instrumentation 2.3-13
Table 2.3.1-4 Components Subject to Aging Management Review - Reactor Internals.. 2.3-18
Table 2.3.1-5 Components Subject to Aging Management Review - Reactor Pressure Vessel 2.3-23
Table 2.3.1-6 Components Subject to Aging Management Review - Reactor Recirculation System 2.3-30

Table 2.3.2-1 Components Subject to Aging Management Review - Automatic Depressurization System (ADS) 2.3-35
Table 2.3.2-2 Components Subject to Aging Management Review - Containment Hydrogen Recombiner System 2.3-39
Table 2.3.2-3 Components Subject to Aging Management Review - Core Spray System 2.3-44
Table 2.3.2-4 Components Subject to Aging Management Review - Filtration, Recirculation, and Ventilation System 2.3-48
Table 2.3.2-5 Components Subject to Aging Management Review - High Pressure Coolant Injection (HPCI) System 2.3-54
Table 2.3.2-6 Components Subject to Aging Management Review - Hydrogen and Oxygen Analyzer System 2.3-59
Table 2.3.2-7 Components Subject to Aging Management Review - Reactor Core Isolation Cooling (RCIC) System 2.3-65
Table 2.3.2-8 Components Subject to Aging Management Review - Residual Heat Removal (RHR) System 2.3-73
Table 2.3.2-9 Components Subject to Aging Management Review - Vacuum Relief Valve System 2.3-77

Table 2.3.3-1 Components Subject to Aging Management Review - Chilled Water System 2.3-83
Table 2.3.3-2 Components Subject to Aging Management Review - Closed Cycle Cooling Water System 2.3-92
Table 2.3.3-3 Components Subject to Aging Management Review - Compressed Air System 2.3-101
Table 2.3.3-4 Components Subject to Aging Management Review - Containment Inerting and Purging System 2.3-107
Table 2.3.3-5 Components Subject to Aging Management Review - Control Area Chilled Water System 2.3-112
Table 2.3.3-6 Components Subject to Aging Management Review - Control Rod Drive System 2.3-119
Table 2.3.3-7 Components Subject to Aging Management Review - Control Room and Control Area HVAC Systems 2.3-125
Table 2.3.3-8 Components Subject to Aging Management Review - Cranes & Hoists ... 2.3-129

Table 2.3.3-9 Components Subject to Aging Management Review - Equipment and Floor Drainage System 2.3-135
Table 2.3.3-10 Components Subject to Aging Management Review - Fire Protection System 2.3-141
Table 2.3.3-11 Components Subject to Aging Management Review - Fire Pump House Ventilation System 2.3-146
Table 2.3.3-12 Components Subject to Aging Management Review - Fresh Water Supply System 2.3-150
Table 2.3.3-13 Components Subject to Aging Management Review - Fuel Handling and Storage System 2.3-154
Table 2.3.3-14 Components Subject to Aging Management Review - Fuel Pool Cooling and Cleanup System 2.3-160
Table 2.3.3-15 Components Subject to Aging Management Review - Hardened Torus Vent System 2.3-164
Table 2.3.3-16 Components Subject to Aging Management Review - Hydrogen Water Chemistry System 2.3-169
Table 2.3.3-17 Components Subject to Aging Management Review - Leak Detection and Radiation Monitoring System 2.3-176
Table 2.3.3-18 Components Subject to Aging Management Review - Makeup Demineralizer System 2.3-180
Table 2.3.3-19 Components Subject to Aging Management Review - Primary Containment Instrument Gas System 2.3-186
Table 2.3.3-20 Components Subject to Aging Management Review - Primary Containment Leakage Rate Testing System 2.3-192
Table 2.3.3-21 Components Subject to Aging Management Review - Process and Post-Accident Sampling Systems 2.3-199
Table 2.3.3-22 Components Subject to Aging Management Review - Radwaste System 2.3-204
Table 2.3.3-23 Components Subject to Aging Management Review - Reactor Building Ventilation System 2.3-212
Table 2.3.3-24 Components Subject to Aging Management Review - Reactor Water Cleanup System 2.3-218
Table 2.3.3-25 Components Subject to Aging Management Review - Remote Shutdown Panel Room HVAC System 2.3-222
Table 2.3.3-26 Components Subject to Aging Management Review - Service Water Intake Ventilation System 2.3-226
Table 2.3.3-27 Components Subject to Aging Management Review - Service Water System 2.3-232
Table 2.3.3-28 Components Subject to Aging Management Review - Standby Diesel Generator Area Ventilation Systems 2.3-239
Table 2.3.3-29 Components Subject to Aging Management Review - Standby Diesel Generators and Auxiliary Systems 2.3-245
Table 2.3.3-30 Components Subject to Aging Management Review - Standby Liquid Control System 2.3-251
Table 2.3.3-31 Components Subject to Aging Management Review - Torus Water Cleanup System 2.3-255
Table 2.3.3-32 Components Subject to Aging Management Review - Traversing Incore Probe System 2.3-260
Table 2.3.4-1 Components Subject to Aging Management Review - Condensate Storage and Transfer System 2.3-267
Table 2.3.4-2 Components Subject to Aging Management Review - Feedwater System 2.3-273

Table 2.3.4-3 Components Subject to Aging Management Review - Main Condenser System 2.3-277
Table 2.3.4-4 Components Subject to Aging Management Review - Main Steam System 2.3-283
Table 2.4-1 Components Subject to Aging Management Review - Auxiliary Boiler Building 2.4-4
Table 2.4-2 Components Subject to Aging Management Review - Auxiliary Building Control/Diesel Generator Area 2.4-8
Table 2.4-3 Components Subject to Aging Management Review - Auxiliary Building Service/Radwaste Area 2.4-14
Table 2.4-4 Components Subject to Aging Management Review - Component Supports Commodity Group 2.4-18
Table 2.4-5 Components Subject to Aging Management Review - Fire Water Pump House 2.4-23
Table 2.4-6 Components Subject to Aging Management Review - Piping and Component Insulation Commodity Group 2.4-26
Table 2.4-7 Components Subject to Aging Management Review - Primary Containment 2.4-31
Table 2.4-8 Components Subject to Aging Management Review - Reactor Building 2.4-38
Table 2.4-9 Components Subject to Aging Management Review - Service Water Intake Structures 2.4-45
Table 2.4-10 Components Subject to Aging Management Review - Shoreline Protection and Dike 2.4-49
Table 2.4-11 Components Subject to Aging Management Review - Switchyard 2.4-52
Table 2.4-12 Components Subject to Aging Management Review - Turbine Building 2.4-56
Table 2.4-13 Components Subject to Aging Management Review - Yard Structures 2.4-63

Table 2.5.2-1 Electrical Component Commodity Groups Subject to Aging Management Review 2.5-8

Table 3.0-1 Hope Creek Internal Service Environments 3.0-6
Table 3.0-2 Hope Creek External Service Environments 3.0-9

Table 3.1.1 Summary of Aging Management Evaluations for the Reactor Vessel, Internals, and Reactor Coolant System 3.1-14

Table 3.1.2-1 Nuclear Boiler Instrumentation System Summary of Aging Management Evaluation 3.1-41
Table 3.1.2-2 Reactor Internals Summary of Aging Management Evaluation 3.1-49
Table 3.1.2-3 Reactor Pressure Vessel Summary of Aging Management Evaluation 3.1-81
Table 3.1.2-4 Reactor Recirculation System Summary of Aging Management Evaluation 3.1-105

Table 3.2.1 Summary of Aging Management Evaluations for the Engineered Safety Features 3.2-20

Table 3.2.2-1 Containment Hydrogen Recombiner System Summary of Aging Management Evaluation 3.2-43
Table 3.2.2-2 Core Spray System Summary of Aging Management Evaluation 3.2-47

Table 3.2.2-3 Filtration, Recirculation, and Ventilation System Summary of Aging Management Evaluation 3.2-56
Table 3.2.2-4 High Pressure Coolant Injection (HPCI) System Summary of Aging Management Evaluation 3.2-62
Table 3.2.2-5 Hydrogen and Oxygen Analyzer System Summary of Aging Management Evaluation 3.2-87
Table 3.2.2-6 Reactor Core Isolation Cooling (RCIC) System Summary of Aging Management Evaluation 3.2-90
Table 3.2.2-7 Residual Heat Removal (RHR) System Summary of Aging Management Evaluation 3.2-114
Table 3.2.2-8 Vacuum Relief Valve System Summary of Aging Management Evaluation 3.2-125

Table 3.3.1 Summary of Aging Management Evaluations for the Auxiliary Systems 3.3-56

Table 3.3.2-1 Chilled Water System Summary of Aging Management Evaluation ... 3.3-110
Table 3.3.2-2 Closed Cycle Cooling Water System Summary of Aging Management Evaluation 3.3-115
Table 3.3.2-3 Compressed Air System Summary of Aging Management Evaluation 3.3-137
Table 3.3.2-4 Containment Inerting and Purging System Summary of Aging Management Evaluation 3.3-140
Table 3.3.2-5 Control Area Chilled Water System Summary of Aging Management Evaluation 3.3-143
Table 3.3.2-6 Control Rod Drive System Summary of Aging Management Evaluation 3.3-153
Table 3.3.2-7 Control Room and Control Area HVAC Systems Summary of Aging Management Evaluation 3.3-160
Table 3.3.2-8 Cranes & Hoists Summary of Aging Management Evaluation 3.3-166
Table 3.3.2-9 Equipment and Floor Drainage System Summary of Aging Management Evaluation 3.3-170
Table 3.3.2-10 Fire Protection System Summary of Aging Management Evaluation . 3.3-175
Table 3.3.2-11 Fire Pump House Ventilation System Summary of Aging Management Evaluation 3.3-197
Table 3.3.2-12 Fresh Water Supply System Summary of Aging Management Evaluation 3.3-199
Table 3.3.2-13 Fuel Handling and Storage System Summary of Aging Management Evaluation 3.3-202
Table 3.3.2-14 Fuel Pool Cooling and Cleanup System Summary of Aging Management Evaluation 3.3-206
Table 3.3.2-15 Hardened Torus Vent System Summary of Aging Management Evaluation 3.3-211
Table 3.3.2-16 Hydrogen Water Chemistry System Summary of Aging Management Evaluation 3.3-213
Table 3.3.2-17 Leak Detection and Radiation Monitoring System Summary of Aging Management Evaluation 3.3-216
Table 3.3.2-18 Makeup Demineralizer System Summary of Aging Management Evaluation 3.3-218
Table 3.3.2-19 Primary Containment Instrument Gas System Summary of Aging Management Evaluation 3.3-220

Table 3.3.2-20 Primary Containment Leakage Rate Testing System Summary of Aging Management Evaluation 3.3-224
Table 3.3.2-21 Process and Post-Accident Sampling Systems Summary of Aging Management Evaluation 3.3-227
Table 3.3.2-22 Radwaste System Summary of Aging Management Evaluation 3.3-231
Table 3.3.2-23 Reactor Building Ventilation System Summary of Aging Management Evaluation 3.3-234
Table 3.3.2-24 Reactor Water Cleanup System Summary of Aging Management Evaluation 3.3-239
Table 3.3.2-25 Remote Shutdown Panel Room HVAC System Summary of Aging Management Evaluation 3.3-253
Table 3.3.2-26 Service Water Intake Ventilation System Summary of Aging Management Evaluation 3.3-257
Table 3.3.2-27 Service Water System Summary of Aging Management Evaluation .. 3.3-260
Table 3.3.2-28 Standby Diesel Generator Area Ventilation Systems Summary of Aging Management Evaluation 3.3-272
Table 3.3.2-29 Standby Diesel Generators and Auxiliary Systems Summary of Aging Management Evaluation 3.3-277
Table 3.3.2-30 Standby Liquid Control System Summary of Aging Management Evaluation 3.3-291
Table 3.3.2-31 Torus Water Cleanup System Summary of Aging Management Evaluation 3.3-297
Table 3.3.2-32 Traversing Incore Probe System Summary of Aging Management Evaluation 3.3-301

Table 3.4.1 Summary of Aging Management Evaluations for the Steam and Power Conversion System 3.4.13

Table 3.4.2-1 Condensate Storage and Transfer System Summary of Aging Management Evaluation 3.4-34
Table 3.4.2-2 Feedwater System Summary of Aging Management Evaluation 3.4-39
Table 3.4.2-3 Main Condenser System Summary of Aging Management Evaluation 3.4-44
Table 3.4.2-4 Main Steam System Summary of Aging Management Evaluation 3.4-46

Table 3.5.1 Summary of Aging Management Evaluations for Structures and Component Supports 3.5-41

Table 3.5.2-1 Auxiliary Boiler Building Summary of Aging Management Evaluation 3.5-66
Table 3.5.2-2 Auxiliary Building Control/Diesel Generator Area Summary of Aging Management Evaluation 3.5-73
Table 3.5.2-3 Auxiliary Building Service/Radwaste Area Summary of Aging Management Evaluation 3.5-91
Table 3.5.2-4 Component Supports Commodity Group Summary of Aging Management Evaluation 3.5-112
Table 3.5.2-5 Fire Water Pump House Summary of Aging Management Evaluation 3.5-150
Table 3.5.2-6 Piping and Component Insulation Commodity Group Summary of Aging Management Evaluation 3.5-159
Table 3.5.2-7 Primary Containment Summary of Aging Management Evaluation 3.5-162
Table 3.5.2-8 Reactor Building Summary of Aging Management Evaluation 3.5-175

Table 3.5.2-9 Service Water Intake Structures Summary of Aging Management Evaluation 3.5-201
Table 3.5.2-10 Shoreline Protection and Dike Summary of Aging Management Evaluation 3.5-227
Table 3.5.2-11 Switchyard Summary of Aging Management Evaluation 3.5-229
Table 3.5.2-12 Turbine Building Summary of Aging Management Evaluation 3.5-242
Table 3.5.2-13 Yard Structures Summary of Aging Management Evaluation 3.5-255

Table 3.6.1 Summary of Aging Management Programs for the Electrical Components Evaluated in Chapter VI of NUREG-1801 ..... 3.6-15

Table 3.6.2-1 Electrical Commodities Summary of Aging Management Evaluation 3.6-20

Table 4.1-1 Time-Limited Aging Analyses Applicable to HCGS 4-4
Table 4.1.3-1 Review of Analyses Listed in NUREG-1800, Tables 4.1-2 and 4.1-3 4-5
Table 4.2.1-1 HCGS USE Assessment for 56 EFPY 4-10
Table 4.2.2-1 56 EFPY Adjusted Reference Temperatures for HCGS Reactor Pressure Vessel Materials 4-13
Table 4.2.4-1 Effects of Irradiation on Reactor Pressure Vessel Circumferential Weld Properties for HCGS 4-17
Table 4.2.5-1 Effects for Irradiation on Reactor Pressure Vessel Axial Weld Properties for HCGS 4-19
Table 4.3.1-1 HCGS Reactor Pressure Vessel Design Transients and 60-Year Cycle Projections 4-26
Table 4.3.1-2 Fatigue Monitoring Locations for HCGS Reactor Pressure Vessel Components and Estimated CUFs 4-28
Table 4.3.3-1 Fatigue Monitoring Locations for HCGS RCPB Piping Components and Estimated CUFs 4-33
Table 4.3.5-1 Environmental Fatigue Results for HCGS for NUREG/CR-6260 Components 4-38
Table 4.6.1-1 Fatigue Monitoring Locations for HCGS Primary Containment and Estimated CUFs 4-46

List of Figures

Figure 2.1-1 Hope Creek Scoping and Screening Flowchart 2.1-3

Figure 2.1-2 Hope Creek Offsite Power for SBO 2.1-13

1.0 ADMINISTRATIVE INFORMATION

1.1 GENERAL INFORMATION - 10 CFR 54.19

1.1.1 NAME OF APPLICANT

PSEG Nuclear LLC hereby applies for a renewed operating license for Hope Creek Generating Station (Hope Creek).

1.1.2 ADDRESS OF APPLICANT

PSEG Nuclear LLC
80 Park Plaza, T4B
Newark, NJ 07102

1.1.3 DESCRIPTIONS OF BUSINESS OR OCCUPATION OF APPLICANT

PSEG Nuclear LLC is a Delaware limited liability company formed to own and operate nuclear generating stations. PSEG Nuclear LLC is a wholly owned subsidiary of PSEG Power LLC, a Delaware limited liability company which is wholly owned by Public Service Enterprise Group Incorporated (PSEG), a corporation formed under the laws of the State of New Jersey. PSEG Nuclear LLC is the licensed operator of Hope Creek, which is the subject of this application. The current Hope Creek operating license (Facility Operating License No. NPF-57) expires at midnight on April 11, 2026. PSEG Nuclear LLC will continue as the licensed operator of Hope Creek under the renewed operating licenses.

Hope Creek is owned 100 percent by PSEG Nuclear LLC.

1.1.4 DESCRIPTIONS OF ORGANIZATION AND MANAGEMENT OF APPLICANT

PSEG Nuclear LLC

PSEG Nuclear LLC is organized under the laws of the State of Delaware. PSEG Nuclear LLC's principal place of business is in Hancock's Bridge, NJ. PSEG Power LLC is a Delaware limited liability company, wholly owned by Public Service Enterprise Group Incorporated (PSEG), a corporation formed under the laws of the State of New Jersey with their headquarters and principal place of business in Newark, NJ. PSEG is a publicly traded corporation whose shares are widely traded on the New York Stock Exchange.

All of the Directors and principal officers of PSEG Nuclear LLC, PSEG Power LLC and PSEG are U.S. citizens. Neither PSEG Nuclear LLC, PSEG Power LLC nor its parent, PSEG, is owned, controlled, or dominated by an alien, a foreign

corporation, or a foreign government. The Directors and principal officers of PSEG Nuclear LLC and their addresses are presented below:

Board of Directors (PSEG Nuclear LLC)		
Name	**Title**	**Address**
Clarence J. Hopf, Jr.	Director	PSEG Nuclear LLC 80 Park Plaza, T4B Newark, NJ 07102
Thomas P. Joyce	Director	PSEG Nuclear LLC 80 Park Plaza, T4B Newark, NJ 07102
Richard P. Lopriore	Director	PSEG Nuclear LLC 80 Park Plaza, T4B Newark, NJ 07102

Principal Officers (PSEG Nuclear LLC)		
Name	**Title**	**Address**
Thomas P. Joyce	President and Chief Nuclear Officer	PSEG Nuclear LLC One Alloway Creek Neck Rd. Hancock's Bridge, NJ 08038
Robert C. Braun	Site Vice President, Salem	PSEG Nuclear LLC One Alloway Creek Neck Rd. Hancock's Bridge, NJ 08038
John F. Perry	Site Vice President, Hope Creek	PSEG Nuclear LLC One Alloway Creek Neck Rd. Hancock's Bridge, NJ 08038
Carl J. Fricker	Vice President, Operations Support	PSEG Nuclear LLC One Alloway Creek Neck Rd. Hancock's Bridge, NJ 08038

1.1.5 CLASS OF LICENSE, USE OF THE FACILITY, AND PERIOD OF TIME FOR WHICH THE LICENSE IS SOUGHT

PSEG Nuclear LLC requests renewal of the Class 103 operating license for Hope Creek (License No. NPF-57), for a period of 20 years beyond the expiration of the current license. Approval of this License Renewal request would extend the operating license for Hope Creek from midnight April 11, 2026 until midnight April 11, 2046. Hope Creek would continue to generate electric power during the period of extended operation. PSEG Nuclear LLC also requests the renewal of specific licenses under 10 CFR Parts 30, 40, and 70 that are subsumed in the current operating license.

1.1.6 EARLIEST AND LATEST DATES FOR ALTERATIONS, IF PROPOSED

No plant alterations or modifications have been identified as necessary in connection with this application.

1.1.7 RESTRICTED DATA

With regard to the requirements of 10 CFR 54.17(f), this application does not contain any "Restricted Data," as that term is defined in the Atomic Energy Act of 1954, as amended, or other defense information, and it is not expected that any such information will become involved in these licensed activities.

In accordance with the requirements of 10 CFR 54.17(g), the applicant will not permit any individual to have access to, or any facility to possess restricted data or classified national security information until the individual and/or facility has been approved for such access under the provisions of 10 CFR Parts 25 and/or 95.

1.1.8 REGULATORY AGENCIES

PSEG Nuclear LLC recovers the costs incurred from operating Hope Creek in its own wholesale rates. The Federal Energy Regulatory Commission (FERC) regulates the interstate sales of electricity generated at Hope Creek:

Federal Energy Regulatory Commission
888 First St. N.E.
Washington, DC 20426

1.1.9 LOCAL NEWS PUBLICATIONS

News publications in circulation near Hope Creek that are considered appropriate to give reasonable notice of the application are as follows:

Today's Sunbeam
93 Fifth Street
Salem, NJ 08079
856-935-1500

Gloucester County Times
309 South Broad Street
Woodbury, NJ 08096
856-845-3300

Bridgeton News
100 East Commerce Street
Bridgeton, NJ 08302
856-451-1000

The News Journal
P.O. Box 15505
Wilmington, DE 19850
302-324-2500

1.1.10 CONFORMING CHANGES TO STANDARD INDEMNITY AGREEMENT

10 CFR 54.19(b) requires that "each application must include conforming changes to the standard indemnity agreement, 10 CFR 140.92, Appendix B, to account for the expiration term of the proposed renewed license." The current indemnity agreement (No. BX08-05) for Hope Creek states in Article VII that the agreement shall terminate at the time of expiration of that license specified in Item 3 of the Attachment to the agreement, which is the last to expire; provided that, except as may otherwise be provided in applicable regulations or orders of the Commission, the term of this agreement shall not terminate until all the radioactive material has been removed from the location and transportation of the radioactive material from the location has ended as defined in subparagraph 5(b), Article I. Item 3 of the Attachment to the indemnity agreement includes license number NPR-57. Applicant requests that any necessary conforming changes be made to Article VII and Item 3 of the Attachment, and any other sections of the indemnity agreement as appropriate to ensure that the indemnity agreement continues to apply during both the terms of the current license and the terms of the renewed license. Applicant understands that no changes may be necessary for this purpose if the current license number is retained.

1.2 GENERAL LICENSE INFORMATION

1.2.1 APPLICATION UPDATES, RENEWED LICENSES, AND RENEWAL TERM OPERATION

In accordance with 10 CFR 54.21(b), during NRC review of this application, an annual update to the application to reflect any change to the current licensing basis that materially affects the contents of the license renewal application will be provided.

In accordance with 10 CFR 54.21(d), PSEG Nuclear LLC will maintain a summary list in the Hope Creek Updated Final Safety Analysis Report (UFSAR) of activities that are required to manage the effects of aging for the systems, structures, or components in the scope of license renewal during the period of extended operation and summaries of the time-limited aging analyses evaluations.

1.2.2 CONTACT INFORMATION

Any notices, questions, or correspondence in connection with this filing should be directed to:

C. Fricker
Vice President - Operations Support
PSEG Nuclear LLC
One Alloway Creek Neck Road
Hancock's Bridge, NJ 08038

with copies to:

C. Neely
Director, Regulatory Affairs
PSEG Nuclear LLC
One Alloway Creek Neck Road
Hancock's Bridge, NJ 08038

J. Stavely
Manager, License Renewal
PSEG Nuclear LLC
One Alloway Creek Neck Road
Hancock's Bridge, NJ 08038

M. Gallagher
Vice President License Renewal Projects
Exelon Nuclear LLC
200 Exelon Way
Kennett Square, PA 19348

1.3 PURPOSE

This document provides information required by 10 CFR Part 54 to support the application for renewed licenses for Hope Creek. The application contains technical information required by 10 CFR 54.21 and environmental information required by 10 CFR 54.23. The information contained herein is intended to provide the NRC with an adequate basis to make the findings required by 10 CFR 54.29.

1.4 DESCRIPTION OF THE PLANT

Hope Creek Generating Station is a single-unit facility located at the southern end of Artificial Island in Lower Alloways Creek Township, Salem County, New Jersey. Philadelphia is approximately 64 km (40 mi) northeast and Salem, New Jersey, is 13 km (8 mi) northeast of the site. The Hope Creek Generating Station was originally planned to be a two unit BWR station. During the construction phase of the project, a decision was made to cancel Unit 2 but complete construction of the power block. Those areas of the Unit 2 power block are classified as cancelled structures within the UFSAR.

Hope Creek occupies about 62 hectares (153 acres) of approximately 300 hectares (740 acres) owned by PSEG Nuclear LLC on Artificial Island. The Salem Generating Station, Units 1 and 2 (Salem Units 1 & 2) are also located within this 300-hectare (740-acre) parcel.

The Hope Creek reactor is a single cycle, forced recirculation boiling water reactor supplied by General Electric with a Mark I containment. The reactor produces steam for direct use in the steam turbine. The primary containment is of a Mark I design that consists of a drywell, a suppression chamber in the shape of a torus and a connecting vent system between the drywell and the suppression chamber. Hope Creek was initially licensed to operate at a rated power level of 3,293 MWt. License Amendment No. 131, dated 7/30/2001, authorized a 1.4 percent increase in the licensed rated power level to 3,339 MWt. License Amendment No. 174, dated 5/14/2008, authorized a further 15 percent increase in licensed rated power level to 3,840 MWt.

Also located on Artificial Island are Salem Units 1 & 2, which are operated by PSEG Nuclear LLC, and are jointly owned by PSEG Nuclear LLC and Exelon Generation LLC. There are no Salem Units 1 & 2 systems, structures, or components (SSCs) that are relied upon for the operation of Hope Creek. There are interconnections between the Salem and Hope Creek fire protection systems (Section 2.3.3.10) and the electrical transmission network, Salem-Hope Creek Tie Line (Figure 2.1-2).

1.5 APPLICATION STRUCTURE

This license renewal application is structured in accordance with Regulatory Guide 1.188, "Standard Format and Content for Applications to Renew Nuclear Plant Operating Licenses," and NEI 95-10, "Industry Guideline for Implementing the Requirements of 10 CFR Part 54 - The License Renewal Rule". In addition, Section 3, Aging Management Review Results and Appendix B, Aging Management Programs, are structured to address the guidance provided in NUREG-1800, "Standard Review Plan for Review of License Renewal Applications for Nuclear Power Plants". NUREG-1800 references NUREG-1801, "Generic Aging Lessons Learned (GALL) Report." NUREG-1801 was used to determine the adequacy of existing aging management programs and which existing programs should be augmented for license renewal. The results of the aging management review, using NUREG-1801, have been documented and are illustrated in table format in Section 3, "Aging Management Review Results," of this application.

The application is divided into the following major sections:

Section 1 – Administrative Information

This section provides the administrative information required by 10 CFR 54.17 and 10 CFR 54.19. This section describes the plant and states the purpose for this application. Included in this section are the names, addresses, business descriptions, and organization and management descriptions of the applicant, as well as other administrative information. This section also provides an overview of the structure of the application, general references, and a listing of acronyms used throughout the application.

Section 2 – Scoping and Screening Methodology for Identifying Structures and Components Subject to Aging Management Review, and Implementation Results

This section describes and justifies the methods used in the integrated plant assessment to identify those structures and components subject to an aging management review in accordance with the requirements of 10 CFR 54.21(a)(2). These methods consist of: 1) scoping, which identifies the systems, structures, and components that are within the scope of 10 CFR 54.4(a), and 2) screening under 10 CFR 54.21(a)(1), which identifies those in-scope structures and components that perform their intended function without moving parts or a change in configuration or properties, and that are not subject to replacement based on a qualified life or specified time period. Additionally, the results for systems and structures are described in this section. Scoping results are presented in Section 2.2, "Plant Level Scoping Results." Screening results are presented in Sections 2.3, 2.4, and 2.5.

The screening results consist of lists of components, component groups, and structures that require aging management review. Brief descriptions of mechanical systems and structures within the scope of license renewal are provided as background information. Mechanical system and structure intended functions are provided for in-scope systems and structures. For each

in-scope system and structure, components requiring an aging management review are identified, associated component intended functions are identified, and appropriate reference to the Section 3 Tables where the aging management review results are provided.

Selected structural and electrical components, such as component supports and electrical cables, were evaluated as commodities. Under the commodity approach, selected structural and electrical component groups were evaluated based upon common environments and materials. Structural and Electrical components requiring an aging management review are presented in Sections 2.4 and 2.5, respectively. Component intended functions and references to the applicable Section 3 Tables are provided.

Section 3 – Aging Management Review Results

10 CFR 54.21(a)(3) requires a demonstration that the effects of aging will be adequately managed so that the intended functions will be maintained consistent with the current licensing basis throughout the period of extended operation. Section 3 presents the results of the aging management reviews. Section 3 is the link between the scoping and screening results provided in Section 2 and the aging management programs provided in Appendix B.

Aging management review results are presented in tabular form, in a format in accordance with NUREG-1800, "Standard Review Plan for Review of License Renewal Applications." For mechanical systems, aging management review results are provided in Sections 3.1 through 3.4 for the Reactor Vessel, Internals, and Reactor Coolant System, Engineered Safety Features Systems, Auxiliary Systems, and Steam and Power Conversions Systems, respectively. Aging management review results for Containments, Structures, and Component Supports are provided in Section 3.5. Aging management review results for Electrical Commodity Groups are provided in Section 3.6.

Tables are provided in each of these sections in accordance with NUREG-1800, which provide aging management review results for components, materials, environments, and aging effects which are addressed in NUREG-1801, and information regarding the degree to which the proposed aging management programs are consistent with those recommended in NUREG-1801.

Section 4 – Time-Limited Aging Analyses

Time-limited aging analyses (TLAAs), as defined by 10 CFR 54.3, are listed in this section. This section includes each of the TLAAs identified in the NRC Standard Review Plan for License Renewal Applications and in plant-specific analyses. This section includes a summary of the time-dependent aspects of the analyses. A demonstration is provided to show that the analyses remain valid for the period of extended operation, the analyses have been projected to the end of the period of extended operation, or the effects of aging on the intended function(s) will be adequately managed for the period of extended operation, consistent with 10 CFR 54.21(c)(1)(i)-(iii).

Appendix A –Updated Final Safety Analysis Report Supplement

As required by 10 CFR 54.21(d), the Updated Final Safety Analysis Report (UFSAR) supplement contains a summary of activities credited for managing the effects of aging for the period of extended operation. In addition, summary descriptions of time-limited aging analyses evaluations are provided.

Appendix B – Aging Management Programs

Appendix B describes the programs and activities that are credited for managing aging effects for components or structures during the period of extended operation based upon the aging management review results provided in Section 3 and the time-limited aging analyses results provided in Section 4.

Section B.2.1 and B.3 of Appendix B discuss those programs that are contained in Section XI and Section X of NUREG-1801, respectively. A description of the aging management program is provided and a conclusion based upon the results of an evaluation to each of the ten elements provided in NUREG-1801. In some cases, exceptions and justifications for managing aging are provided for specific NUREG-1801 elements. Additionally, operating experience related to the aging management program is provided.

Section B.2.2 of Appendix B also addresses each of the ten program elements for programs that are credited for managing aging that are not evaluated in NUREG-1801.

Appendix C – BWRVIP Applicant Action Items

This Appendix provides the requested responses to applicant action items contained in the NRC safety evaluation reports associated with NRC-approved Boiling Water Reactor Vessel and Internals Program reports.

Appendix D – Technical Specification Changes

This Appendix satisfies the requirement in 10 CFR 54.22 to identify technical specification changes or additions necessary to manage the effects of aging during the period of extended operation. There were no Technical Specification Changes identified necessary to manage the effects of aging during the period of extended operation.

Appendix E – Environmental Information

This Appendix satisfies the requirements of 10 CFR 54.23 to provide a supplement to the environmental report that complies with the requirements of subpart A of 10 CFR Part 51 for Hope Creek.

1.6 ACRONYMS

Acronym	Meaning
AMP	Aging Management Program
AMR	Aging Management Review
ASME	American Society of Mechanical Engineers
ASTM	American Society for Testing and Materials
ATWS	Anticipated transients without scram
ARI	Alternate rod injection
BWR	Boiling Water Reactor
BWRVIP	Boiling Water Reactor Vessel Internals Project
CASS	Cast austenitic stainless steel
CFR	Code of Federal Regulations
CLB	Current licensing basis
CRD	Control Rod Drive
CUF	Cumulative Usage Factor
DBA	Design basis accident
DBD	Design basis document
DBE	Design basis event
DOT	United States Department of Transportation
EAF	Environmentally Assisted Fatigue
ECCS	Emergency Core Cooling System
EFPY	Effective full-power years
EHC	Electro-Hydraulic Control
EPRI	Electric Power Research Institute

Acronym	Meaning
EQ	Environmental qualification
FAC	Flow-accelerated corrosion
FHAR	Fire Hazards Analysis Report
FSSD	Fire safe shutdown
GALL	Generic Aging Lessons Learned Report NUREG 1801
GL	Generic Letter
GSI	Generic Safety Issue
HCGS	Hope Creek Generating Station
HELB	High energy line break
HEPA	High efficiency particulate air
HPCI	High Pressure Coolant Injection
HVAC	Heating, ventilation, and air conditioning
HX	Heat exchanger
I & C	Instrumentation and controls
IASCC	Irradiation-assisted stress corrosion cracking
IEEE	Institute of Electrical and Electronics Engineers
IGSCC	Intergranular stress corrosion cracking
IN	Information Notice
INPO	Institute of Nuclear Power Operations
IPA	Integrated plant assessment
ISI	Inservice inspection
ISG	Interim Staff Guidance
IST	In-service testing
LBB	Leak before break

Acronym	Meaning
LER	Licensee event report
LLRT	Local leak rate test
LOCA	Loss-of-coolant accident
LRA	License renewal application
MCC	Motor control center
MIC	Microbiologically-influenced corrosion
MOV	Motor-operated valve
MSIV	Main Steam Isolation Valve
MWt	Megawatts thermal
NEI	Nuclear Energy Institute
NEMA	National Electrical Manufacturer's Association
NFPA	National Fire Protection Association
NEIL	Nuclear Electric Insurance Limited
NRC	Nuclear Regulatory Commission
OE	Operating experience
OSHA	Occupational Safety and Health Administration
P&ID	Piping and instrumentation diagram
PM	Preventive maintenance
PTS	Pressurized Thermal Shock
P-T curves	Pressure-temperature limit curves
PWR	Pressure Water Reactor
RCIC	Reactor Core Isolation Cooling
RCPB	Reactor coolant pressure boundary
RG	Regulatory guide

Acronym	Meaning
RHR	Residual Heat Removal
RT_{NDT}	Reference temperature nil-ductility transition
RWCU	Reactor Water Clean Up
SACS	Safety & Turbine Auxiliary Cooling System
SBO	Station Black Out
SCC	Stress corrosion cracking
SGS	Salem Generating Station
SLC	Standby Liquid Control
SRP	Standard Review Plan
SRV	Safety relief valve
SSCs	Systems, structures, and components
SSE	Safe shutdown earthquake
TID	Total integrated dose
TLAAs	Time-limited aging analyses
UFSAR	Updated Final Safety Analysis Report
UHS	Ultimate heat sink
USE	Upper-shelf energy

1.7 GENERAL REFERENCES

1.7.1 10 CFR 54, "Requirements for Renewal of Operating Licenses for Nuclear Power Plants."

1.7.2 NEI 95-10, "Industry Guidelines for Implementing the Requirements of 10 CFR Part 54 – The License Renewal Rule," Revision 6, June 2005.

1.7.3 Regulatory Guide 1.188, "Standard Format and Content for Applications to Renew Nuclear Power Plant Operating Licenses", Rev 1, September 2005.

1.7.4 NUREG-1800, "Standard Review Plan for Review of License Renewal Applications for Nuclear Power Plants" United States Nuclear Regulatory Commission, Rev 1, September 2005.

1.7.5 NUREG-1801, "Generic Aging Lessons Learned (GALL) Report," United States Nuclear Regulatory Commission, Rev 1, September 2005.

1.7.6 10 CFR 50.48, "Fire Protection."

1.7.7 10 CFR 50.49, "Environmental Qualification of Electric Equipment Important to Safety for Nuclear Power Plants."

1.7.8 10 CFR 50.62, "Requirements for Reduction of Risk From Anticipated Transients Without Scram (ATWS) Events for Light-Water-Cooled Nuclear Power Plants."

1.7.9 10 CFR 50.63, "Loss of All Alternating Current Power."

1.7.10 10 CFR 50.61, "Pressurized Thermal Shock."

1.7.11 10 CFR 50.65, "Requirements for Monitoring the Effectiveness of Maintenance at Nuclear Power Plants."

1.7.12 10 CFR 50, Appendix B, "Quality Assurance Criteria for Nuclear Power Plants and Fuel Reprocessing Plants."

1.7.13 10 CFR 51, "Environmental Protection Regulations for Domestic Licensing and Related Regulatory Functions."

1.7.14 NUREG-0800, Section 9.5.1, Appendix B, Supplemental Fire Protection Review Criteria for License Renewal, United States Nuclear Regulatory Commission, Revision 5, March 2007.

1.7.15 NUREG-0933, A Prioritization of Generic Safety Issues, U.S. Nuclear Regulatory Commission, August 2008.

1.7.16 Plant Support Engineering: License Renewal Electrical Handbook, Revision 1 to EPRI Report 1003057. EPRI, Palo Alto, CA, 2007. 1013475.

1.7.17 Aging Effects for Structures and Structural Components (Structural Tools), Revision 1. EPRI, Palo Alto, CA, 2003. 1002950.

2.0 SCOPING AND SCREENING METHODOLOGY FOR IDENTIFYING STRUCTURES AND COMPONENTS SUBJECT TO AGING MANAGEMENT REVIEW, AND IMPLEMENTATION RESULTS

This section describes the process for identifying structures and components subject to aging management review in the Hope Creek Generating Station license renewal integrated plant assessment. For the systems, structures and components (SSCs) within the scope of license renewal, 10 CFR 54.21(a)(1) requires the license renewal applicant to identify and list those structures and components subject to Aging Management Review (AMR). 10 CFR 54.21(a)(2) further requires that the methods used to implement the requirements of 10 CFR 54.21(a)(1) be described and justified. Section 2 of this application satisfies these requirements.

The process is performed in two steps. *Scoping* refers to the process of identifying the plant systems and structures that are to be included in the scope of license renewal in accordance with 10 CFR 54.4. The intended functions that are the bases for including the systems and structures in the scope of license renewal are also identified during the scoping process. *Screening* is the process of determining which components associated with the in scope systems and structures are subject to an aging management review in accordance with 10 CFR 54.21(a)(1) requirements. A detailed description of the Hope Creek scoping and screening process is provided in Section 2.1.

The scoping and screening methodology is consistent with the guidelines presented in NEI-95-10, Industry Guidelines for Implementing the Requirements of 10 CFR Part 54 – The License Renewal Rule, Rev. 6 (reference 1.7.2). The plant level scoping results identify the systems and structures within the scope of license renewal in Section 2.2. The screening results identify structures and components subject to aging management review in the following LRA sections:

- Section 2.3 for mechanical systems
- Section 2.4 for structures
- Section 2.5 for electrical/I&C systems

2.1 SCOPING AND SCREENING METHODOLOGY

2.1.1 INTRODUCTION

This introduction provides an overview of the scoping and screening process used at the Hope Creek Generating Station. Subsequent sections provide details of how the process was implemented.

The methodology began with scoping. The initial step in the scoping process was to define the entire plant in terms of systems and structures. These systems and structures were evaluated against the scoping criteria in 10 CFR 54.4(a)(1), (a)(2), and (a)(3), to determine if they perform or support a safety related intended function, or perform functions that demonstrate compliance with the requirement of one of the five license renewal regulated events. For the systems and structures determined to be in scope, the intended functions that are the bases for including them in scope were also identified. Scoping evaluations are documented in a System and Structure Scoping Report.

If any portion of a system or structure met the scoping criteria of 10 CFR 54.4, the system or structure was included in the scope of license renewal. Mechanical systems and structures were then further evaluated, to determine those mechanical and structural components that perform or support the identified intended functions. The in scope boundaries of mechanical systems and structures were developed and are described in Sections 2.3 and 2.4. These boundaries are also depicted on the license renewal Boundary Drawings. The in scope boundaries of the mechanical systems and structures are highlighted in color. In scope structures and mechanical components are shown in green, except nonsafety-related mechanical components that are in scope to preclude physical or spatial interaction, or provide structural support to safety-related SSCs, which are shown in red. Additional details on scoping evaluations and boundary drawing development are provided in Section 2.1.5.

All electrical components within in scope mechanical and electrical systems were included in the scope of license renewal as electrical commodities. Consequently, further system evaluations to determine which electrical components were required to perform or support the system intended functions were not required. Additional details on electrical and I&C system scoping are provided in Section 2.1.5.

After completion of the scoping and boundary evaluations, the screening process evaluated the in scope structures and components to identify the long-lived, passive structures and components subject to an aging management review, along with the structure and component passive intended functions. Additional details on the screening process are provided in Section 2.1.6.

Selected components, such as component supports and passive electrical components, were more effectively scoped and screened as commodities. As such, they were not evaluated with the individual system or structure, but were evaluated collectively as a commodity group. Commodity groups are identified in Table 2.2-1. The passive electrical commodities are identified in Section 2.5. Commodity groups utilized are consistent with NUREG-1800 Table 2.1-5 and previous license renewal applications accepted by the NRC.

Figure 2.1-1 provides a flowchart of the general scoping and screening process for mechanical systems, structures and electrical systems.

FIGURE 2.1-1
Hope Creek Scoping and Screening Flowchart

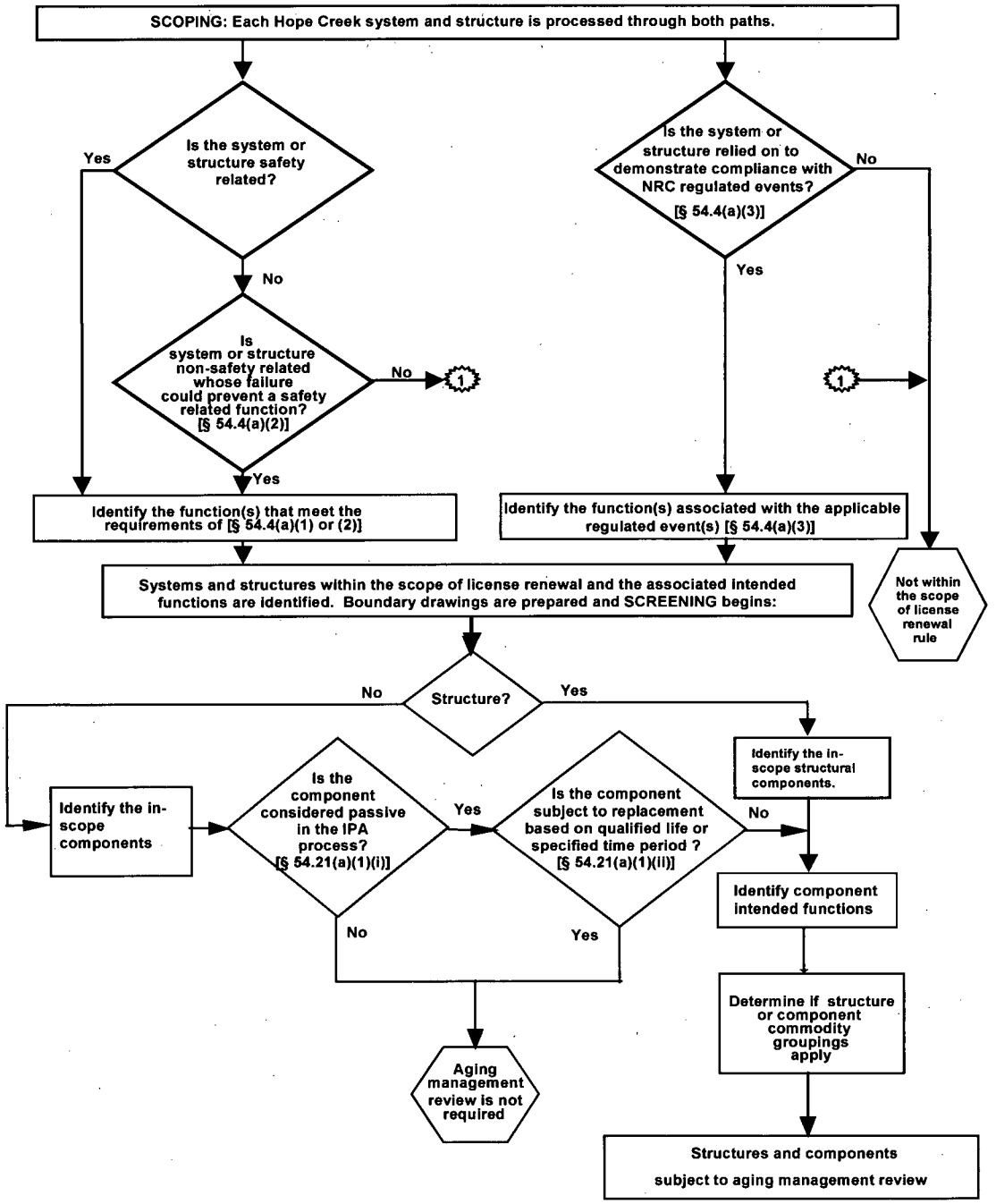

2.1.2 INFORMATION SOURCES USED FOR SCOPING AND SCREENING

A number of different current license basis (CLB) and design basis information sources were utilized in the scoping and screening process. The CLB for Hope Creek is consistent with the definition provided in 10 CFR 54.3. The significant source documentation is discussed below.

These source documents are available in hard copy or electronic format. Document records such as licensing correspondence and NRC Safety Evaluation Reports are available in a searchable database, such that applicable documents can be identified and located by searching the appropriate topic.

2.1.2.1 Updated Final Safety Analysis Report

The Hope Creek Updated Final Safety Analysis Report (UFSAR) follows the established guidelines published in NUREG-0800, "Standard Review Plan for the Review of Safety Analysis Reports for Nuclear Power Plants," dated July 1981. The Hope Creek UFSAR has since been updated regularly in accordance with the requirements of 10 CFR 50.71(e). The UFSAR provided significant input for system and structure descriptions and functions.

2.1.2.2 Fire Hazards Analysis Report

The Fire Hazards Analysis Report (FHAR) describes the fire protection configuration for the confinement, detection, and extinguishment of fires, and demonstrates the capability to achieve and maintain safe shutdown conditions in the event of a fire, in support of the Fire Protection Program functions.

2.1.2.3 Environmental Qualification Master List

The scope of the electrical equipment and components that must be environmentally qualified for use in a harsh environment at Hope Creek is identified in the SAP database. The database includes a listing of equipment and components, and includes fields that identify specific equipment information such as manufacturer, plant location and qualification level. The Environmental Qualification (EQ) data is located in the Component Data Module of the SAP database, which is discussed in section 2.1.2.6. The SAP database EQ data field is a design quality field, which means the data is controlled and has been verified accurate.

2.1.2.4 Maintenance Rule Database

The Maintenance Rule Database documents the results of Maintenance Rule scoping for Hope Creek systems and structures. The Maintenance Rule Database provided an additional source of information to identify system and structure functions.

2.1.2.5 Configuration Baseline Documents

System Configuration Baseline Documents are available for selected Hope Creek systems. The Configuration Baseline Documents are historical documents that provide detailed descriptions of the associated system design basis, including system functions and design requirements, with references to controlled source documents. The system Configuration Baseline Document and source documents were reviewed during the system scoping review.

2.1.2.6 Controlled Plant Component Database

Hope Creek maintains a controlled plant component database that contains component level design and maintenance information. The plant component database is called the *Systeme, Anwendungen und Produkte in der Datenverarbeitung* ["Systems, Applications and Products in Data Processing"] (SAP). The SAP database lists plant components at the level of detail for which discrete maintenance or modification activities typically are performed. At Hope Creek, the SAP database provides a comprehensive listing of plant components. Component type and unique component identification numbers identify each component in the database.

2.1.2.7 Other CLB References

NRC Safety Evaluation Reports include NRC staff review of Hope Creek licensing submittals. Some of these documents may contain licensee commitments.

Licensing correspondence includes relief requests, Licensee Event Reports, and responses to NRC communications such as NRC bulletins, generic letters or enforcement actions. Some of these documents may contain licensee commitments.

Engineering drawings provide system, structure and component configuration details for Hope Creek. These drawings were used in conjunction with the plant component database records to support scoping and screening evaluations.

Engineering evaluations and calculations can provide additional information about the requirements or characteristics associated with the evaluated systems, structures or components.

2.1.3 TECHNICAL BASIS DOCUMENTS

Technical basis documents were prepared in support of the license renewal project. Engineers experienced in nuclear plant systems, programs and operations prepared the basis documents. Basis documents contain technical evaluations and bases for decisions or positions associated with license renewal requirements as described below. Basis documents are prepared, reviewed and approved in accordance with controlled project procedures, and are based on the CLB source documents described in Section 2.1.2.

The following sections describe the technical basis documents associated with the Hope Creek scoping and screening methodology.

2.1.3.1 License Renewal Systems and Structures List

One of the first steps necessary to begin the license renewal scoping process was to identify a comprehensive list of systems and structures to be evaluated for license renewal scoping. While there exists a variety of document sources that identify and list Hope Creek systems and structures, no single source provided the comprehensive list in a format appropriate for 10 CFR 54.4 license renewal system and structure scoping. Therefore, a basis document was prepared to establish a comprehensive list of license renewal systems and structures, and to document the basis for the list. Starting with the systems and structures list contained in an approved procedure, the list was reviewed against the SAP database, the Hope Creek UFSAR, plant design drawings, the maintenance rule database, and other plant design documents. Plant systems and structures were arranged into logical groupings for scoping reviews, and the groupings were defined as license renewal systems and structures. Components evaluated as commodity groups were also identified. The basis document assures all plant structures and components included in the scoping review are associated with a system, structure or commodity group.

The basis document grouped license renewal systems and structures into the following categories:

- Reactor Vessel, Internals, and Reactor Coolant System
- Engineered Safety Features
- Auxiliary Systems
- Steam and Power Conversion System
- Electrical and Instrumentation and Control (I&C) Systems
- Containment, Structures, and Component Supports

This grouping of the Hope Creek license renewal systems and structures is based on the Hope Creek UFSAR and the guidance of NUREG-1801 "Generic Aging Lessons Learned (GALL) Report." The complete list of systems, structures and commodity groups evaluated for license renewal is provided in Section 2.2 of this application.

Certain structures and equipment were excluded at the outset because they are not considered to be systems, structures or components that are part of the CLB, do not have design or functional requirements related to the 10 CFR 54.4(a)(1), (a)(2) or (a)(3) scoping criteria. These include: driveways and parking lots, temporary equipment, health physics equipment, portable measuring and testing equipment, tools and motor vehicles.

2.1.3.2 Identification of Safety-Related Systems and Structures

Safety-related systems and structures are included in the scope of license renewal in accordance with 10 CFR 54.4(a)(1) scoping criterion. Hope Creek plant components that have been classified as safety-related are identified as "Q" in the controlled quality classification data field in the SAP database. Hope

Creek quality classification procedures were reviewed against the license renewal "Safety-related" scoping criterion in 10 CFR 54.4(a)(1), to confirm that Hope Creek safety-related classifications are consistent with license renewal requirements. This review is included in a technical basis document. The basis document also provides a summary list of the systems and structures that are safety-related at Hope Creek. These systems and structures are included in the scope of license renewal under the 10 CFR 54.4(a)(1) scoping criterion.

The Hope Creek quality classification procedure definition of safety-related (Q) is as follows:

All safety-related structures, systems, and components required to assure:

- *Integrity of reactor coolant boundary.*
- *Capability to shut down the reactor and maintain it in a safe shutdown condition.*
- *Capability to prevent or mitigate the consequences of an accident which could result in potential off-site exposure comparable to the guidelines of 10 CFR 100.*
- *Retaining of fuel temperature within design limits by maintaining fuel coolant inventory and temperature within design limits.*
- *Control of the concentration of combustible gases in the containment system within established limits."*

This definition is technically equivalent to 10 CFR 54.4(a)(1) for the purposes of license renewal scoping. The wording differences are addressed as follows:

Design Basis Events

The Hope Creek procedure definition does not specifically refer to design basis events, while 10 CFR 54.4(a)(1) refers to design basis events as defined in 10 CFR 50.49(b)(1). For Hope Creek license renewal, an additional technical basis document was prepared to confirm that all applicable design basis events were considered. The basis document includes a review of all systems or structures that are relied upon to remain functional during and following design-basis events as defined in 10 CFR 50.49 (b)(1). This includes confirming that design basis internal and external events including design basis accidents, anticipated operational occurrences, and natural phenomena as described in the current licensing basis are considered when scoping for license renewal. Safety-related systems and structures required to support 10 CFR 54.4(a)(1) functions are included in the scope of license renewal under 10 CFR 54.4(a)(1). Nonsafety-related systems and structures required to support 10 CFR 54.4(a)(1) functions are included in the scope of license renewal under 10 CFR 54.4(a)(2).

Exposure Limits

The Hope Creek quality classification procedure definition of safety-related refers to 10 CFR 100 for accident exposure limits. The license renewal rule refers to 10 CFR 50.34(a)(1), 10 CFR 50.67(b)(2), or 10 CFR 100.11, as applicable. These different exposure limit requirements appear in three different Code sections to address similar accident analyses performed by licensees for different reasons. The exposure limit requirements in 10 CFR 50.34(a)(1) are applicable to facilities seeking a construction permit, and are therefore not applicable to Hope Creek license renewal. The exposure limit requirements in 10 CFR 50.67(b)(2) are applicable to facilities seeking to revise the current accident source term used in their design basis radiological analyses. The Hope Creek UFSAR refers to both 10 CFR 50.67 and 10 CFR 100 for accident exposure limits. Hope Creek alternate radiological source term methodology was applied (in accordance with Reg. Guide 1.183) to the design basis accident analyses and therefore utilizes 10 CFR 50.67 dose acceptance criteria. The alternate radiological source term methodology for post-accident radiological analysis of certain events allows credit for some nonsafety-related components as plate-out surfaces or holdup volumes. Nonsafety-related components credited in post-accident radiological analyses for plate-out or holdup are included in scope under 10 CFR 54.4(a)(2).

The Hope Creek definition of safety-related includes two additional criteria that are not included in 10 CFR 54.4(a)(1). SSCs required to meet these additional criteria are included in scope for 10 CFR 54.4(a)(1). Therefore, the Hope Creek definition of safety-related is consistent with the 10 CFR 54.4(a)(1) definition for the purposes of identifying the safety-related SSCs that are within the scope of license renewal.

When supplemented with the broad review of CLB design basis events, the Hope Creek quality classification procedure definition of "safety-related" is consistent with 10 CFR 54.4(a)(1), and results in a comprehensive list of safety-related systems and structures that were included in the scope of license renewal. This is consistent with NUREG-1800 Section 2.1.3.1.1.

2.1.3.3 10 CFR 54.4(a)(2) Scoping Criteria

All nonsafety-related systems, structures, and components whose failure could prevent satisfactory accomplishment of any of the functions identified under 10 CFR 54.4 (a)(1), were included in the scope of license renewal in accordance with 10 CFR 54.4(a)(2) requirements. To assure complete and consistent application of this scoping criterion, a technical basis document was prepared.

This license renewal scoping criteria requires consideration of the following:

1. Nonsafety-related SSCs required to support a safety-related 10 CFR 54.4(a)(1) function.

2. Nonsafety-related systems connected to and providing structural support for a safety-related SSC.

3. Nonsafety-related systems with a potential for spatial interaction with safety-related SSCs.

The first item is addressed during the scoping process, by identifying the nonsafety-related systems and structures required to support the accomplishment of a safety-related intended function under 10 CFR 54.4(a)(1), and then including these supporting systems and structures in scope of license renewal under 10 CFR 54.4(a)(2).

The remaining two items concern nonsafety-related systems with potential physical or spatial interaction with safety-related systems, structures and components. Scoping of these systems is the subject of NEI 95-10 Appendix F. To assure complete and consistent application of 10 CFR 54.4(a)(2) requirements and NEI 95-10, a technical basis document was prepared. The basis document includes a review of the CLB references relevant to physical or spatial interactions.

The basis document describes the Hope Creek approach to scoping of nonsafety-related systems with a potential for physical or spatial interaction with safety-related SSCs. Hope Creek chose to implement the preventive option as described in NEI 95-10. The basis document provides appropriate guidance to assure that license renewal scoping for 10 CFR 54.4(a)(2) met the requirements of the license renewal rule and NEI 95-10. See Section 2.1.5.2 for additional discussion of the application of this scoping criterion.

2.1.3.4 Scoping for Regulated Events

Technical basis documents were prepared to address license renewal scoping of SSCs relied on in safety analyses or plant evaluations to perform a function that demonstrates compliance with the Commission's regulations for Fire Protection, Environmental Qualification, Anticipated Transients Without Scram and Station Blackout. The Commission's regulations for pressurized thermal shock are not applicable to the Hope Creek boiling water reactor design. These basis documents are summarized below:

Fire Protection

All systems, structures and components relied on in safety analyses or plant evaluations to perform a function that demonstrates compliance with the Commission's regulations for fire protection (10 CFR 50.48) are included in the scope of license renewal in accordance with 10 CFR 54.4(a)(3) requirements.

The scope of systems and structures required for the fire protection program to comply with the requirements of 10CFR50.48 includes:

- Systems and structures required to demonstrate post-fire safe shutdown capabilities
- Systems and structures required for fire detection and suppression

- Systems and structures required to meet commitments made to Appendix A of Branch Technical Position (BTP) APCSB 9.5-1

Recent NRC guidance, including NUREG-0800 Section 9.5.1 Appendix B (reference 1.7.14) states that the scope of 10 CFR 50.48 goes beyond the protection of safety-related equipment, and also includes fire protection systems, structures and components needed to minimize the effects of a fire and to prevent the release of radioactive material to the environment. Fire protection system and structure scoping for Hope Creek is performed consistent with this guidance, and is documented in the technical basis document.

The fire protection technical basis document summarizes results of a detailed review of the plant's fire protection program documents that demonstrate compliance with the requirements of 10 CFR 50.48. The basis document provides a list of systems and structures credited in the plant's fire protection program documents. For the listed systems and structures, the basis document also identifies appropriate CLB references. The identified systems and structures are included in the scope of license renewal under the 10 CFR 54.4(a)(3) scoping criteria.

The fire detection and suppression systems at Hope Creek are plant-wide systems that protect a wide variety of plant equipment. Not all portions of these systems are required to demonstrate compliance with 10 CFR 50.48. Some portions of the fire detection and suppression systems protect plant areas in which a fire would not impact any equipment important to safety, or significantly increase the risk of radioactive releases to the environment. Portions of the fire suppression and detection systems that are not included in the scope of license renewal are identified in the technical basis document. Those portions of fire detection and suppression systems that are not included in scope can be isolated from the remaining in scope system by closing the associated isolation valve. The isolation valve is included within the scope of license renewal.

Environmental Qualification

Criterion 10 CFR 54.4(a)(3) requires that all systems, structures and components relied on in safety analyses or plant evaluations to perform a function that demonstrates compliance with the Commission's regulations for environmental qualification (10 CFR 50.49) be included in the scope of license renewal.

The Hope Creek Environmental Qualification (EQ) program includes safety-related electrical equipment, nonsafety-related electrical equipment whose failure under postulated environmental conditions could prevent satisfactory accomplishment of safety functions of the safety-related equipment, and certain post-accident monitoring equipment, as defined in 10 CFR 50.49(b)(1), 10 CFR 50.49(b)(2), and 10 CFR 50.49(b)(3) respectively. This equipment is included in the scope of license renewal.

The environmental qualification basis document summarizes the results of a review of Hope Creek EQ program documents. The EQ basis document provides a list of systems that include EQ components. The EQ basis document also provides a list of structures that provide the physical boundaries

for the postulated harsh environments, and contain environmentally qualified electrical equipment. These systems and structures are included in the scope of license renewal under the 10 CFR 54.4(a)(3) scoping criteria.

Anticipated Transients Without Scram

Criterion 10 CFR 54.4(a)(3) requires that all systems, structures and components relied on in safety analyses or plant evaluations to perform a function that demonstrates compliance with the Commission's regulations for anticipated transients without scram (10 CFR 50.62) be included in the scope of license renewal.

An Anticipated Transient Without Scram (ATWS) is a postulated operational transient that generates an automatic scram signal, accompanied by a failure of the reactor protection system to shutdown the reactor.

For boiling water reactors (BWR), the following requirements apply:

1. Each BWR must have an alternate rod injection (ARI) system with redundant scram air header exhaust valves. The ARI system must be independent of the existing reactor trip system.

2. Each BWR must have a standby liquid control system with defined boron injection capabilities. Standby liquid control system automatic initiation is not required for plants issued a construction permit before July 26, 1984, unless already installed.

3. Each BWR must have equipment to trip the recirculation pumps automatically under conditions indicative of an ATWS.

The ATWS basis document summarizes the results of a review of the Hope Creek current licensing basis with respect to ATWS. Hope Creek has a Redundant Reactivity Control System (RRCS) that is designed to mitigate the potential consequences of an ATWS event. The system consists of remote control panels, their associated ATWS detection and actuation logic and the necessary interface logic to the Reactor Recirculation System, the Feed water Control System, the Reactor Water Cleanup System, the Standby Liquid Control (SLC) System, and the Alternate Rod Insertion (ARI) components of the Control Rod Drive System required to perform specific functions in response to an ATWS event. Hope Creek also has an adequately sized standby liquid control system that is initiated automatically by the RRCS logic when needed.

The ATWS basis document provides a list of the systems required by 10 CFR 50.62 to reduce the risk from ATWS events. The basis document also provides a list of structures that provide physical support and protection for the ATWS systems. These systems and structures are included in the scope of license renewal under the 10 CFR 54.4(a)(3) scoping criteria.

Station Blackout

Criterion 10 CFR 54.4(a)(3) requires that all systems, structures and components relied upon in safety analyses or plant evaluations to perform a

function that demonstrates compliance with the Commission's regulations for station blackout (10 CFR 50.63) be included in the scope of license renewal.

A station blackout (SBO) event is a complete loss of alternating current (AC) electric power to the essential and nonessential switchgear buses in a nuclear power plant (i.e., loss of the offsite electric power system concurrent with generator trip and unavailability of the onsite emergency AC power sources). SBO does not include the loss of available AC power to buses fed by station batteries through inverters or by alternate AC sources, nor does it assume a concurrent single failure or design basis accident.

The Hope Creek satisfies the requirement of 10 CFR 50.63 as an AC-independent, 4-hour coping plant. Hope Creek capabilities, commitments and analyses that demonstrate compliance with 10 CFR 50.63 are documented in UFSAR Section 1.15.1 and in NRC safety evaluation reports and correspondence related to the SBO rule.

The NUREG-1800 guidance on scoping of equipment relied on to meet the requirements of the SBO rule (10 CFR 50.63) for license renewal has been incorporated into the Hope Creek scoping methodology. In accordance with the NUREG-1800 requirements, the SSCs required to recover from the SBO event are included in the scope of license renewal. Recovery is defined as the repowering of the plant AC distribution system from offsite sources or onsite emergency AC sources.

For Hope Creek, this includes the portion of the plant electrical system used to connect the in scope AC distribution system equipment to offsite power and by definition recover from an SBO event. For Hope Creek, the boundary between the electrical transmission network and the plant electrical distribution system and equipment has been defined at the circuit breakers between the switchyard bus and the offsite transmission lines. These connections are at the 30X, 31X, 50X, 51X, 60X, and 61X 500kV circuit breakers. These circuit breakers are the isolation devices between the plant electrical distribution system and the offsite electrical transmission network and are in scope. Included in the scope of license renewal on the plant side of this boundary are: switchyard bus and connections, transmission conductors and connections, high voltage insulators, substation structures and supports, inaccessible medium voltage cables, metal enclosed bus, insulated cables and connections, and cable connections (metallic parts). See Figure 2.1-2.

The SBO basis document summarizes the results of a review of the Hope Creek current licensing basis with respect to station blackout. The basis document provides lists of systems and structures credited in Hope Creek SBO evaluations. For the listed systems and structures, the basis document also identifies appropriate CLB references. These systems and structures are included in the scope of license renewal under the 10 CFR 54.4(a)(3) scoping criteria.

Figure 2.1-2
Hope Creek Offsite Power for SBO

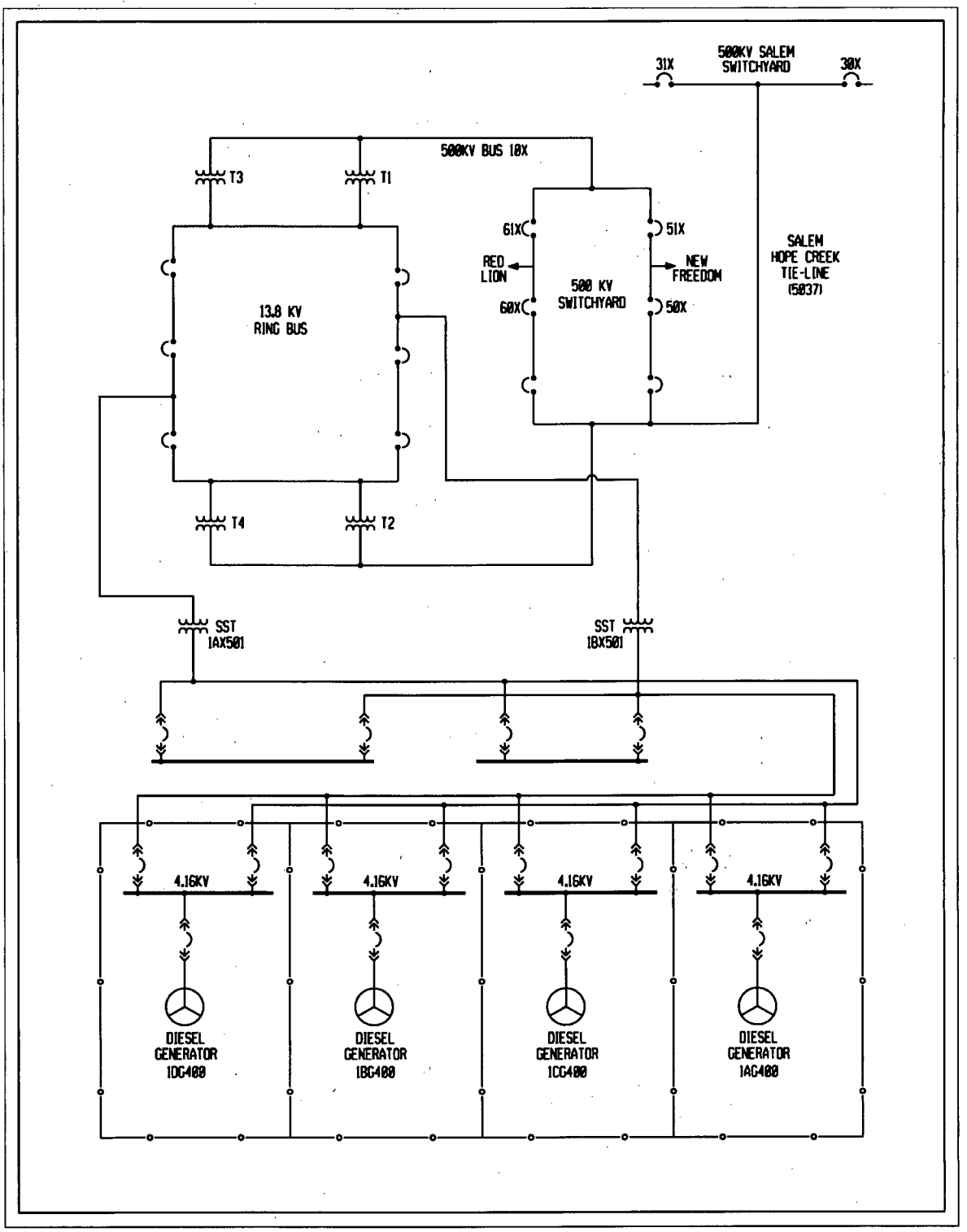

2.1.4 INTERIM STAFF GUIDANCE DISCUSSION

The NRC has encouraged applicants for license renewal to address proposed Interim Staff Guidance (ISG) issues in license renewal applications. The following is the complete list of ISG issues that have not been incorporated in current license renewal guidance documents as of March 2009.

LR-ISG-19B	Cracking of Nickel-alloy Components in the Reactor Coolant Pressure Boundary
LR-ISG-2006-01	Corrosion of the Mark I Steel Containment Drywell Shell
LR-ISG-2006-02	Staff Guidance on Acceptance Review for Environmental Requirements
LR-ISG-2006-03	Staff Guidance for Preparing Severe Accident Mitigation Alternatives (SAMA) Analyses
LR-ISG-2007-01	Updating the LR-ISG Process to Include References to the Environmental Review Guidance Documents, References for the Recent Publication of Revision 1 of the License Renewal Guidance Documents, and Minor Revisions to Be Consistent with Current Staff Practices
LR-ISG-2007-02	Changes to Generic Aging Lesson Learned (GALL) Report Aging Management Program (AMP) XI.E6, "Electrical Cable Connections Not Subject to 10 CFR 50.49 Environmental Qualification Requirements"

The following sections provide a summary discussion of each of the ISG issues:

2.1.4.1 Cracking of Nickel-alloy Components in the Reactor Coolant Pressure Boundary (LR-ISG-19B)

This ISG is only applicable to pressurized water reactors and is therefore not applicable to the Hope Creek boiling water reactor.

2.1.4.2 Corrosion of the Mark I Steel Containment Drywell Shell (LR-ISG-2006-01)

This LR-ISG provides interim guidance to applicants for license renewal for a plant with a BWR Mark I steel containment to provide a plant-specific aging management program that addresses the potential loss of material due to corrosion in the inaccessible areas of their Mark I steel containment drywell shell for the period of extended operation. In conducting the aging management review and developing the plant-specific aging management program for the drywell shell, the LR-ISG requires the applicant to consider six (6) recommended actions based upon plant design and operating experience. Hope Creek conducted an aging review of inaccessible areas of its Mark I containment considering plant design and operating experience, discussed above. Hope Creek concluded that plant-specific activities are required to ensure loss of material in inaccessible areas of the drywell shell is adequately

managed or mitigated consistent with the LR-ISG-2006-01 guidance. This review is discussed in Section 3.5.2.2.1.4.

2.1.4.3 Staff Guidance on Acceptance Review for Environmental Requirements (LR-ISG-2006-02)

The NRC staff has promulgated for public comment proposed guidance for this issue. The guidance of this LR-ISG consists of an environmental report (ER) acceptance review checklist for use by the NRC staff. Hope Creek has prepared the license renewal environmental report in accordance with the requirements summarized in LR-ISG-2006-02.

2.1.4.4 Staff Guidance for Preparing Severe Accident Mitigation Alternatives (SAMA) Analyses (LR-ISG-2006-03)

The NRC staff has issued final guidance for this issue. The Hope Creek severe accident mitigation alternatives analysis provided as a part of Appendix E to this application is consistent with the guidance of NEI 05-01, Severe Accident Mitigation Alternatives (SAMA) Analysis Guidance Document, as discussed in this Interim Staff Guidance.

2.1.4.5 Updating the LR-ISG Process to Include References to the Environmental Review Guidance Documents, References for the Recent Publication of Revision 1 of the License Renewal Guidance Documents, and Minor Revisions to Be Consistent with Current Staff Practices (LR-ISG-2007-01)

The NRC staff is developing this ISG. No guidance has yet been promulgated.

2.1.4.6 Changes to Generic Aging Lesson Learned (GALL) Report Aging Management Program (AMP) XI.E6, "Electrical Cable Connections Not Subject to 10 CFR 50.49 Environmental Qualification Requirements" (LR-ISG-2007-02)

The NRC staff has promulgated for public comment proposed guidance for this issue. Hope Creek has addressed the September 6, 2007 draft of LR-ISG-2007-02 in the aging management program Electrical Cable Connections not Subject to 10 CFR 50.49 Environmental Qualification Requirements, which is described in Appendix B.2.1.39.

2.1.5 SCOPING PROCEDURE

The scoping process is the systematic process used to identify the Hope Creek systems, structures and components within the scope of the license renewal rule. The scoping process was initially performed at the system and structure level, in accordance with the scoping criteria identified in 10 CFR 54.4(a). System and structure functions and intended functions were identified from a review of the source CLB documents. In scope boundaries were established and documented in the scoping evaluations, based on the identified intended functions. The in scope boundaries form the basis for identification of the in scope components, which is the first step in the screening process described in Section 2.1.6. System and structure scoping evaluations are documented and have been retained in a license renewal database. The system and structure scoping results are provided in Section 2.2.

The Hope Creek scoping process began with the development of a comprehensive list of plant systems and structures, as described in Section 2.1.3.1. The systems and structures were grouped into one of the following categories:

- Reactor Vessel, Internals, and Reactor Coolant System
- Engineered Safety Features
- Auxiliary Systems
- Steam and Power Conversion System
- Electrical and Instrumentation and Control (I&C) Systems
- Containment, Structures, and Component Supports

Each Hope Creek system and structure was then scoped for license renewal using the criteria of 10 CFR 54.4(a). These criteria are briefly identified as follows:

- Title 10 CFR 54.4(a)(1) – Safety-related
- Title 10 CFR 54.4(a)(2) – Non-safety-related affecting safety-related
- Title 10 CFR 54.4(a)(3) – The five regulated events:
  - Fire Protection (10 CFR 50.48)
  - Environmental Qualification, EQ (10 CFR 50.49)
  - Pressurized Thermal Shock (10 CFR 50.61) (PWRs only)
  - Anticipated Transient Without Scram, ATWS (10 CFR 50.62)
  - Station Blackout, SBO (10 CFR 50.63)

The application of each of these criteria is discussed in Section 2.1.5.1, Section 2.1.5.2 and Section 2.1.5.3 below:

2.1.5.1 Safety-Related – 10 CFR 54.4(a)(1)

In accordance with 10 CFR 54.4(a)(1), the systems, structures and components within the scope of license renewal include:

Safety-related systems, structures, and components which are those relied upon to remain functional during and following design-basis events (as defined in 10 CFR 50.49(b)(1)) to ensure the following functions –

(i) The integrity of the reactor coolant pressure boundary;

(ii) The capability to shutdown the reactor and maintain it in a safe shutdown condition; or

(iii) The capability to prevent or mitigate the consequences of accidents which could result in potential offsite exposures comparable to those referred to in 10 CFR 50.34(a)(1), 10 CFR 50.67(b)(2), or 10 CFR 100.11, as applicable.

At Hope Creek, the safety-related plant components are identified in the SAP database. The safety-related classifications in the Hope Creek SAP database were established using a controlled procedure, with classification criteria nearly identical to the above 10 CFR 54.4(a)(1) criteria. The classification criteria differences were evaluated in a license renewal basis document (see Section 2.1.3.2) and accounted for during the license renewal scoping process.

Safety-related classifications for systems and structures are based on system and structure descriptions and analyses in the UFSAR, or on design basis documents such as engineering drawings, evaluations or calculations. Safety-related structures are those structures listed in the UFSAR and classified as Seismic Category I. Systems and structures that are identified as safety-related in the UFSAR or in design basis documents have been classified as satisfying criteria of 10 CFR 54.4(a)(1) and have been included within the scope of license renewal. Safety-related components in the SAP database were also reviewed and the system or structure associated with the safety-related component was included in scope under 10 CFR 54.4(a)(1) criterion. The review also confirmed that all plant conditions, including conditions of normal operation, abnormal operational transients, design basis accidents, internal and external events, and natural phenomena for which the plant must be designed, were considered for license renewal scoping.

2.1.5.2 Nonsafety-Related Affecting Safety-Related – 10 CFR 54.4(a)(2)

In accordance with 10 CFR 54.4(a)(2), the systems, structures and components within the scope of license renewal include –

- All nonsafety-related systems, structures and components whose failure could prevent satisfactory accomplishment of any of the functions identified in 10 CFR 54.4(a)(1)(i), (ii) or (iii).

This scoping criterion requires an assessment of nonsafety-related SSCs with respect to the following application or configuration categories:

- Functional support for safety-related SSC 10 CFR 54.4(a)(1) functions
- Connected to and provide structural support for safety-related SSCs
- Potential for spatial interactions with safety-related SSCs

- Mitigative plant design features used to exclude SSCs from the scope of license renewal

Each of these four categories are discussed below:

Functional Support for Safety-Related SSC 10 CFR 54.4(a)(1) Functions

This category addresses nonsafety-related SSCs that are required to function in support of a safety-related SSC intended function. The functional requirement distinguishes this category from the other categories, where the nonsafety-related SSCs are required only to maintain adequate integrity to preclude structural failure or spatial interactions. The nonsafety-related SSCs that were included in scope under this review, to support a safety-related SSC in performing a 10 CFR 54.4(a)(1) intended function, are identified on the license renewal boundary drawings in green.

The Hope Creek UFSAR and other CLB documents were reviewed to identify nonsafety-related systems or structures required to support satisfactory accomplishment of a safety-related function. Nonsafety-related systems or structures credited in CLB documents to support a safety-related function have been included within the scope of license renewal. Hope Creek classifies systems that are required to perform or support a safety-related function as safety-related, with the following exceptions:

- The normal compressed air supply to the fuel pool gate seals is nonsafety-related. Nonsafety-related compressed air cylinders provide a back up source of air that is automatically isolated from the normal supply by check valves.

- Nonsafety-related Main Steam piping downstream of the outboard main steam isolation valves up to the turbine stop valves is credited for plate-out surface in some post-accident radiological analyses.

- The nonsafety-related Main Condenser is credited for holdup volume in some post-accident radiological analyses.

These nonsafety-related systems were included in the scope of license renewal under 10 CFR 54.4(a)(2).

As an additional confirmation of scoping under this 10 CFR 54.4(a)(2) category, a supporting system review was completed as part of the scoping process. The scoping process was performed on a system and structure basis. The scoping evaluation for each system and structure was documented on a System and Structure Scoping Report. When a system was included in scope under 10 CFR 54.4(a)(1), the scoping evaluation included the identification of any additional systems required to support the safety-related system intended functions. It was then confirmed that these identified supporting systems were also included in scope. Except as identified above, the Hope Creek systems required to support 10 CFR 54.4(a)(1) functions are classified safety-related at Hope Creek, and as such included in the scope of license renewal under 10 CFR 54.4(a)(1). The identification of supporting systems was not required for structures, as structural intended functions do not rely on supporting systems.

The next three 10 CFR 54.4(a)(2) scoping categories are the subject of NEI 95-10 Appendix F. The guidance requires that, when demonstrating that failures of nonsafety-related systems would not adversely impact the ability to maintain intended functions, a distinction must be made between nonsafety-related systems that are connected to safety-related systems and those that are not connected to safety-related systems. For a nonsafety-related piping system that is connected and provides structural support to a safety-related piping system, the nonsafety-related piping and supports should be included within the scope of license renewal up to and including the first anchor point past the safety-nonsafety interface.

For nonsafety-related systems which are not connected to safety-related piping or components, or are beyond the first seismic anchor past the safety/nonsafety interface, but have a spatial relationship such that their failure could adversely impact on the performance of a safety-related SSC's intended function, there are two scoping options: a mitigative option or a preventive option. When mitigative features (e.g., pipe whip restraints, jet impingement shields, spray and drip shields, seismic supports, flood barriers) are provided to protect safety-related SSCs from failures of nonsafety-related SSCs, this demonstration should show that mitigating devices are adequate to protect safety-related SSCs from failures of nonsafety-related SSCs regardless of failure location. If this level of protection can be demonstrated, then only the mitigative features need to be included within the scope of license renewal. However, if it cannot be demonstrated that the mitigative features are adequate to protect safety-related SSCs from the consequences of failures of nonsafety-related SSCs, then the preventive option is used, which requires that the nonsafety-related SSC be brought into the scope of license renewal.

The methodology for identification of Hope Creek SSCs that satisfy the 10 CFR 54.4(a)(2) scoping criterion was based on a review of applicable CLB documents, as well as plant specific and industry operating experience. The preventive option is used to demonstrate that safety-related SSCs are adequately protected from failure of nonsafety-related SSCs.

Connected to and Provide Structural Support for Safety-Related SSCs

For nonsafety-related piping connected to safety-related piping, the nonsafety-related piping was assumed to provide structural support to the safety-related piping, unless otherwise confirmed by a review of the installation details.

The nonsafety-related piping was included in scope for 10 CFR 54.4(a)(2), up to one of the following:

1. The first seismic anchor. Only true anchors that ensure forces and moments are restrained in three orthogonal directions are credited.
2. An anchored component (e.g., pump, heat exchanger, tank, etc.) that is designed not to impose loads on connecting piping. The anchored component is included in the scope of license renewal as it has a structural support function for the safety-related piping.

3. A flexible connection that is considered a pipe stress analysis model end point when the flexible connection effectively decouples the piping system (i.e., does not support loads or transfer loads across it to connecting piping).

4. A free end of nonsafety-related piping, such as a drain pipe that ends at an open floor drain.

5. For nonsafety-related piping runs that are connected at both ends to safety-related piping, the entire run of nonsafety-related piping is included in scope.

6. A branch line off of a header where the moment of inertia of the header is greater than 15 times the moment of inertia of the branch. The header is treated as an anchor.

These scoping boundaries are determined from review of the physical installation details, design drawings or seismic analysis calculations.

Failure in the nonsafety-related piping beyond the above anchor locations would not impact structural support for the safety-related piping. The associated piping and components included in the scope of license renewal are identified on the license renewal boundary drawings in red. Note that if the connected nonsafety-related piping system contains water, steam or oil, then the in scope boundary may extend beyond the locations described above due to potential spatial interaction.

Potential for Spatial Interactions with Safety-Related SSCs

Nonsafety-related systems that are not connected to safety-related piping or components, or are beyond the first seismic anchor past the safety/nonsafety interface, and have a spatial relationship such that their failure could adversely impact the performance of a safety-related SSC intended function, must be evaluated for license renewal scope in accordance with 10 CFR 54.4(a)(2) requirements. As described in NEI 95-10 Appendix F, there are two options when performing this scoping evaluation: a mitigative option and a preventive option.

The mitigative option involves crediting plant mitigative features (e.g., pipe whip restraints, jet impingement shields, spray and drip shields, seismic supports, flood barriers) to protect safety-related SSCs from failures of nonsafety-related SSCs. This option requires a demonstration that the mitigating features are adequate to protect safety-related SSCs from failures of nonsafety-related SSCs regardless of failure location. If this level of protection can be demonstrated, then only the mitigative features need be included within the scope of license renewal.

The preventive option involves identifying the nonsafety-related SSCs that have a spatial relationship such that failure could adversely impact the performance of a safety-related SSC intended function, and including the identified nonsafety-related SSC in the scope of license renewal without consideration of plant mitigative features.

Hope Creek applied the preventive option for 10 CFR 54.4(a)(2) scoping.

The preventive option as implemented at Hope Creek is based on a "spaces" approach for scoping of nonsafety-related systems with potential for spatial interaction with safety-related SSCs. Potential spatial interaction is assumed in structures that contain active or passive SSCs that have safety-related functions. The structures of concern for potential spatial interaction were identified based on a review of the CLB to determine which structures contained active or passive safety-related SSCs. Plant walkdowns were performed as required to confirm that all structures containing safety-related SSCs are identified. It is assumed that nonsafety-related SSCs within these structures may be located in proximity to safety-related SSCs.

For structures that contain safety-related SSCs, there may be selected rooms within the structure that do not contain any safety-related components within the room. In a few of these cases, spatial interaction was addressed by confirming that no safety-related components are located within the room, thereby eliminating spatial interaction concerns within these rooms. CLB document reviews and plant walkdowns were utilized as appropriate to confirm that these rooms did not contain safety-related SSCs.

Nonsafety-related piping and components that contain water, oil, or steam, and are located inside structures that contain safety-related SSCs, are included in scope for potential spatial interaction under criterion 10 CFR 54.4(a)(2), unless located in an excluded room. High-energy lines located within structures that contain safety-related equipment are included in the scope of license renewal, under 10 CFR 54.4 (a)(1) or (a)(2), depending on their safety classification. Safety-related high-energy lines are in scope under 10 CFR 54.4 (a)(1), and nonsafety-related high-energy lines are in scope under 10 CFR 54.4 (a)(2). Potential spatial interaction due to leakage or spray is assumed for system pressure as low as atmospheric. System piping and components operating below atmospheric pressure, i.e., under vacuum conditions, do not pose a potential spray hazard and are therefore not included in the scope of license renewal for potential spatial interaction with safety-related equipment. Supports for all nonsafety-related SSCs within these structures are included in scope.

Nonsafety-related piping and components that contain water, oil, or steam are not excluded from scope unless it can be demonstrated that they are not in proximity to safety-related SSCs. This is demonstrated by confirming that there are no safety-related SSCs located within the same space (structure, room or enclosure) as the nonsafety-related piping or component containing water, oil, or steam. This demonstration is based on confirming that there are physical barriers (floors, walls) completely separating the nonsafety-related piping or component from safety-related SSCs, thereby preventing the potential spatial interaction. The structural barrier components are included in scope. No credit is taken for separation by distance alone without a physical barrier capable of preventing the spatial interaction.

Air and gas systems (non-liquid) are not a hazard to other plant equipment, and have therefore been determined not to have spatial interactions with safety-related SSCs. SSCs containing air or gas cannot adversely affect safety-

related SSCs due to leakage or spray, since gas systems contain no liquids that could spray or leak onto safety-related systems to cause shorts or other malfunctions. Gas systems at Hope Creek do not contain sufficient energy to cause pipe whip or jet impingement. Thus the nonsafety-related systems containing air or gas are not included in the scope of license renewal for spatial interaction. The supports are included in scope to prevent the nonsafety-related piping from falling down and potentially impacting safety-related SSCs.

The piping systems included in the scope of license renewal under 10 CFR 54.4(a)(2) for potential spatial interaction with safety-related SSCs are identified on the license renewal Boundary Drawings in red.

Mitigative Plant Design Features Used to Exclude SSCs from the Scope of License Renewal

None.

2.1.5.3 Regulated Events – 10 CFR 54.4(a)(3)

In accordance with 10 CFR 54.4(a)(3), the systems, structures and components within the scope of license renewal include –

> *All systems, structures and components relied on in safety analyses or plant evaluations to perform a function that demonstrates compliance with the Commission's regulations for fire protection (10 CFR 50.48), environmental qualification (10 CFR 50.49), pressurized thermal shock (10 CFR 50.61), anticipated transients without scram (10 CFR 50.61), and station blackout (10 CFR 50.63).*

The regulation for pressurized thermal shock (10 CFR 50.61) is applicable to pressurized water reactors only, and is therefore not applicable the Hope Creek boiling water reactor. For each of the other four applicable regulations, a technical basis document was prepared to provide input into the scoping process. Each of the regulated event basis documents (described in Section 2.1.3.4) identify the systems and structures that are relied upon to demonstrate compliance with the applicable regulation. The basis documents also identify the source documentation used to determine the scope of components within the system that are credited to demonstrate compliance with each of the applicable regulated events. Guidance provided by the technical basis documents was incorporated into the system and structure scoping evaluations, to determine the SSCs credited for each of the regulated events. SSCs credited in the regulated events have been classified as satisfying criteria of 10 CFR 54.4(a)(3) and have been included within the scope of license renewal.

2.1.5.4 System and Structure Intended Functions

For the systems and structures in the scope of license renewal, the intended functions that are the bases for including them within the scope of license renewal are identified and documented in the scoping evaluation. The system or structure intended functions are based on the applicable CLB reference documents. For systems, the system level intended function descriptions

associated with 10 CFR 54.4(a)(1) were standardized based on nuclear safety criteria for boiling water reactors as documented in industry standard ANSI/ANS-52.1-1983. This provided for consistent function application and appropriate level of detail for system level function descriptions. The component level passive intended functions are those structure and component passive functions that are necessary to support the system and structure intended functions. The structure and component intended functions are further described in Section 2.1.6.2, below.

2.1.5.5 Scoping Boundary Determination

Systems and structures that are included in the scope of license renewal are then further evaluated to determine the population of in scope structures and components. This part of the scoping process is also a transition from the scoping process to the screening process. The process for evaluating mechanical systems is different from the process for structures, primarily because the plant design document formats are different. Mechanical systems are depicted primarily on the system piping and instrumentation diagram (P&ID) that show the system components and their functional relationships, while structures are depicted on physical drawings. Electrical and I&C components of in scope electrical and in scope mechanical systems are placed into commodity groups and are screened as commodities. Scoping boundaries for mechanical systems, electrical systems and structures are therefore described separately.

Mechanical Systems

For mechanical systems, the mechanical components that support the system intended functions are included in the scope of license renewal and are depicted on the applicable system piping and instrumentation diagram. Mechanical system piping and instrumentation diagrams are marked up to create license renewal boundary drawings showing the in scope components. Components that are required to support a safety-related function, or a function that demonstrates compliance with one of the license renewal regulated events, are identified on the system piping and instrumentation diagrams by green highlighting. Nonsafety-related components that are connected to safety-related components and are required to provide structural support at the safety/non-safety interface, or components whose failure could prevent satisfactory accomplishment of a safety-related function due to spatial interaction with safety-related SSCs, are identified by red highlighting. A computer sort and download of associated system components from the SAP database confirms the scope of components in the system. Plant walkdowns were performed when required for additional confirmation.

Structures

For structures, the structural components that support the intended functions are included in the scope of license renewal. The structural components are identified from a review of applicable plant design drawings of the structure. Plant walkdowns were performed when required for additional confirmation. A single site plan layout drawing is marked up to create a license renewal boundary drawing showing the in scope structures.

Electrical and I&C Systems

Electrical and I&C systems, and electrical components within mechanical systems, did not require further system evaluations to determine which components were required to perform or support the identified intended functions. A bounding scoping approach is used for electrical equipment. All electrical components within in scope systems were included in the scope of license renewal. In scope electrical components were placed into commodity groups and were evaluated as commodities during the screening process as described in Section 2.1.6.

A single electrical boundary drawing was prepared to schematically show the portions of the plant electrical distribution system that are included in the scope of license renewal. The electrical boundary drawing shows the main plant electrical distribution busses, interfaces with the on-site emergency power supplies, and boundary with the electrical transmission network.

2.1.6 SCREENING PROCEDURE

Once the SSCs within the scope of license renewal have been determined, the next step is to determine which structures and components are subject to an aging management review.

2.1.6.1 Identification of Structures and Components Subject to AMR

The requirement to identify structures and components subject to an aging management review is specified in 10 CFR 54.21(a)(1), which states:

Each application must contain the following information:

(a) An integrated plant assessment (IPA). The IPA must –

(1) For those systems, structures, and components within the scope of this part, as delineated in §54.4, identify and list those structures and components subject to an aging management review. Structures and components subject to an aging management review shall encompass those structures and components—

(i) *That perform an intended function, as described in §54.4, without moving parts or without a change in configuration or properties. These structures and components include, but are not limited to, the reactor vessel, the reactor coolant system pressure boundary, steam generators, the pressurizer, piping, pump casings, valve bodies, the core shroud, component supports, pressure retaining boundaries, heat exchangers, ventilation ducts, the containment, the containment liner, electrical and mechanical penetrations, equipment hatches, seismic Category I structures, electrical cables and connections, cable trays, and electrical cabinets, excluding, but not limited to, pumps (except casing), valves (except body), motors, diesel generators, air compressors, snubbers, the control rod drive, ventilation dampers, pressure transmitters, pressure indicators, water level indicators, switchgears, cooling fans, transistors, batteries, breakers, relays, switches, power inverters, circuit boards, battery chargers, and power supplies; and*

(ii) That are not subject to replacement based on a qualified life or specified time period.

Structures and components that perform an intended function without moving parts or without a change in configuration or properties are defined as passive for license renewal. Passive structures and components that are not subject to replacement based on a qualified life or specified time period are defined as long-lived for license renewal. The screening procedure is the process used to identify the passive, long-lived structures and components in the scope of license renewal and subject to aging management review.

NUREG-1800, "Standard Review Plan for Review of License Renewal Applications for Nuclear Power Plants" and NEI 95-10, Appendix B were used as

the basis for the identification of passive structures and components. Most passive structures and components are long-lived. In the few cases where a passive component is determined not to be long-lived, such determination is documented in the screening evaluation and, if applicable, on the associated license renewal boundary drawing.

The Hope Creek structures and components subject to aging management review have been identified in accordance with the requirements of 10 CFR 54.21(a)(1) described above. The process implemented to meet these requirements for mechanical systems, structures and electrical systems and components is described as follows:

Mechanical Systems

The mechanical system screening process began with the results from the scoping process. For in scope mechanical systems, the completed scoping packages include written descriptions and marked up system piping and instrumentation diagrams that clearly identify the in scope system boundary for license renewal. The marked up system piping and instrumentation diagrams are called boundary drawings for license renewal. These system boundary drawings were carefully reviewed to identify the passive, long-lived components, and the identified components were then entered into the license renewal database. Component listings from the SAP database were also reviewed to confirm that all system components were considered. In cases where the system piping and instrumentation diagram did not provide sufficient detail, such as for some large vendor supplied components (e.g., compressors, emergency diesel generators), the associated component drawings or vendor manuals were also reviewed. Plant walkdowns were performed when required for confirmation. Finally, the identified list of passive, long-lived system components was benchmarked against previous license renewal applications containing a similar system.

Mechanical components are screened with the system in which they were scoped. The only exception involves heat exchangers and coolers, which often involve different system fluids on either side of the heat transfer surface. Heat exchangers and coolers are screened as follows:

1. With the exception of heat exchangers and coolers that are in scope only for 10 CFR 54.4 (a)(2) spatial interactions, the materials, environments and aging effects on both sides of the heat transfer surfaces are evaluated with the system that performs the cooling function. This convention was chosen because the significant aging effects and associated aging management program activities are generally associated with the cooling system side.

2. For heat exchangers and coolers that are in scope for 10 CFR 54.4 (a)(2) only, the portions of the heat exchanger or cooler with the potential for spatial interaction are a function of the design and the process fluid. Therefore, each side of the heat exchanger or cooler is evaluated separately with the system associated with the process environment.

Containments, Structures, and Component Supports

The structure screening process also began with the results from the scoping process. For in scope structures, the completed scoping packages include written descriptions of the structure. If only selected portions of the structure are in scope, the in scope portions are described in the scoping evaluation. The associated structure drawings were carefully reviewed to identify the passive, long-lived structures and components, and the identified structures and components were then entered into the license renewal database. Component listings from the SAP database were also reviewed to confirm that all structural components were considered. Plant walkdowns were performed when required for confirmation. Finally, the identified list of passive, long-lived structures and components was benchmarked against previous license renewal applications.

Electrical and I&C Components

Screening of electrical and I&C components used a bounding approach as described in NEI 95-10. Electrical commodity groups were identified without regard to system. Electrical and I&C components/commodity groups are subject to aging management review, unless they are determined to not be in scope at the system level. The commodity groups subject to an aging management review are identified by applying the criteria of 10 CFR 54.21(a)(1). This method provides the most efficient means for determining the electrical commodity groups subject to an aging management review since many electrical and I&C components/commodity groups are active.

The sequence of steps and special considerations for identification of electrical components that require an aging management review is as follows:

1. Electrical and I&C components in use in license renewal in scope systems at Hope Creek were identified and listed. The listing provided by NEI 95-10 Appendix B is the basis for this list. Electrical and I&C components were organized into commodity groups such as circuit breakers, switches, and cables. Individual components were not identified. The electrical and I&C component commodity groups were identified from a review of plant documents, controlled drawings, the plant equipment database (SAP), and interface with the parallel mechanical and civil/structural screening efforts.

2. Following the identification of the electrical component commodity groups, the criterion of 10 CFR 54.21(a)(1)(i) was applied to identify component commodity groups that perform their functions without moving parts or without a change in configuration or properties (referred to as "passive" components). These components were identified utilizing the guidance of NEI 95-10 and the EPRI License Renewal Electrical Handbook.

3. Electrical commodity groups that perform no license renewal intended functions were not considered further because they do not require aging management review.

4. The screening criterion found in 10 CFR 54.21(a)(1)(ii) excludes those components or commodity groups that are subject to replacement based on a qualified life or specific time period from the requirements of an aging

management review. The 10 CFR 54.21(a)(1)(ii) screening criterion was applied to those components and commodity groups that were not previously eliminated by the application of the 10 CFR 54.21(a)(1)(i) screening criterion. Components and commodity groups included in the plant environmental qualification (EQ) program are replaced on a specified interval based on a qualified life. Components and commodity groups in the EQ program do not meet the "long-lived" criteria of 10 CFR 54.21(a)(1)(ii) and are "short-lived" per the regulatory definition, and are therefore not subject to an aging management review.

5. Components which support or interface with electrical components, for example, cable trays, conduits, instrument racks, panels and enclosures, are assessed as civil/structural components in Section 2.4.

The electrical components that require an aging management review are the separate electrical components that are not a part of a larger active component. For example, the wiring, terminal blocks, and connections located internal to a circuit breaker cubicle were considered to be part of the circuit breaker. Accordingly, the circuit breaker is screened, but not the individual internal parts.

The passive commodity groups that are not subject to replacement based on a qualified life or specified time period are subject to an aging management review. For Hope Creek, the electrical commodity groups that require an AMR are identified in Section 2.5.

2.1.6.2 Passive Intended Function Definitions

The intended functions that the components and structures must fulfill are those functions that are the bases for including them within the scope of license renewal. A component function is an intended function if it must perform that function for the system to be able to perform the system intended function(s). For example, pressure boundary failure of a component would cause loss of inventory from the system, and the system would subsequently be unable to perform its intended function(s). Structures and components may have multiple intended functions. Hope Creek has considered multiple intended functions where applicable, consistent with the staff guidance provided in Table 2.1-3 of NUREG-1800, "Standard Review Plan for Review of License Renewal Applications for Nuclear Power Plants" (Reference 1.7.4).

Table 2.1-1 provides expanded definitions of structure and component passive intended functions identified in this application.

Table 2.1-1 Passive Structure and Component Intended Function Definitions

Passive Intended Function	Definition
Absorb Neutrons	Absorb neutrons
Direct Flow	Provide spray shield or curbs for directing flow
Electrical Continuity	Provide electrical connections to specified sections of an electrical circuit to deliver voltage, current, or signals
Expansion/Separation	Provide for thermal expansion and/or seismic separation
Filter	Provide filtration
Fire Barrier	Provide rated fire barrier to confine or retard fire from spreading to or from adjacent areas of the plant
Flood Barrier	Provide flood protection barrier (internal and external flood event)
Heat Transfer	Provide heat transfer
HELB/MELB Shielding	Provide shielding against high energy line breaks (HELB), and protective features for medium energy line breaks (MELB)
Insulation - Electrical	Insulate and support an electric conductor
Leakage Boundary	Nonsafety-related component that maintains mechanical and structural integrity to prevent spatial interactions that could cause failure of safety-related SSCs. This function includes the required structural support when the nonsafety-related leakage boundary piping is also attached to safety-related piping.
Maintain Adhesion	Provides adhesion to the substrate
Mechanical Closure	Provide closure of components. Typically used with bolting.
Missile Barrier	Provide missile barrier (internal or external missiles)
Pipe Whip Restraint	Provide pipe whip restraint
Pressure Boundary	Provide pressure-retaining boundary so that sufficient flow at adequate pressure is delivered, or provide fission product barrier for containment pressure boundary, or provide containment isolation for fission product retention. This intended function also includes the containment, holdup and plateout function for the Main Steam and Main Condenser systems.

Table 2.1-1 Passive Structure and Component Intended Function Definitions

Passive Intended Function	Definition
Pressure Relief	Provide overpressure protection
Shelter, Protection	Provide shelter/protection for structures and components within the scope for 10 CFR 54.4(a)(1), (a)(2), or (a)(3).
Shielding	Provide shielding against radiation
Spray	Convert fluid into spray
Structural Pressure Boundary	Provide pressure boundary or essentially leak tight barrier to protect public health and safety in the event of any postulated design basis events.
Structural Support	Provide structural support for structures and components within the scope for 10 CFR 54.4(a)(1), (a)(2), or (a)(3) or provide structural integrity to preclude nonsafety-related component interactions that could prevent satisfactory accomplishment of a safety-related function.
Structural Support to maintain core configuration and flow distribution	Provide structural support of fuel assemblies, control rods, and incore instrumentation, to maintain core configuration and flow distribution.
Thermal Insulation	Control of heat loss to preclude overheating of nearby safety-related SSCs, 10 CFR 54.4 (a)(2)
Throttle	Provide flow restriction
Vibration Isolation	Provide flexible support to minimize the impact of vibration
Water retaining boundary	Provide an essentially water leak tight boundary

2.1.6.3 Stored Equipment

Equipment that is stored on site for installation in response to a design basis event is considered to be within the scope of license renewal. At Hope Creek, certain fire scenarios utilize stored portable ventilation equipment to facilitate smoke removal following a fire. The stored portable ventilation equipment is listed in controlled station procedures. These components are confirmed available and in good operating condition by periodic surveillance test and inspections. Tools and supplies used to place the stored equipment in service are not in the scope of license renewal.

2.1.6.4 Consumables

The evaluation process for consumables is consistent with the guidance provided in NUREG-1800 Table 2.1-3. Consumables have been divided into the following four categories for the purpose of license renewal: (a) packing, gaskets, component seals, and O-rings; (b) structural sealants; (c) oil, grease, and component filters; and (d) system filters, fire extinguishers, fire hoses, and air packs.

- Group (a) subcomponents (packing, gaskets, seals, and O-rings): Based on ANSI B31.1 and the ASME B&PV Code Section III, the subcomponents of pressure retaining components as shown above are not pressure-retaining parts. Therefore, these subcomponents are not relied on to form a pressure-retaining function and are not subject to an AMR.
- Group (b) structural sealants: AMRs were required for structural sealants in in scope structures. A summary of the AMR results is presented in Section 2.4.
- Group (c) subcomponents (oil, grease, and component filters): These components are short lived and are periodically replaced. Various plant procedures are used in the replacement of oil, grease, and filters in components that are in scope for license renewal. These components are not subject to an AMR.
- Group (d) consumables (system filters, fire extinguishers, fire hoses, and air packs): System Ventilation filters are replaced in accordance with plant procedures based on vendor manufacturers' requirements and system testing. Fire extinguishers, self-contained breathing air packs and fire hoses are within the scope of license renewal, but are not subject to aging management because they are replaced based on condition. These components are periodically inspected in accordance with National Fire Protection Association (NFPA) standards. These standards require replacement of equipment based on their condition or performance during testing and inspection. The periodic inspections are implemented by controlled Hope Creek procedures. These components are subject to replacement based on NFPA standards implemented by controlled procedures, and are therefore not long-lived and not subject to an aging management review.

2.1.7 GENERIC SAFETY ISSUES

In accordance with the guidance in NEI 95-10 and Appendix A.3 of NUREG-1800, "Standard Review Plan for Review of License Renewal Applications for Nuclear Power Plants," review of NRC generic safety issues (GSIs) as part of the license renewal process is required to satisfy 10 CFR 54.29. This guidance suggests that GSIs involving issues related to license renewal aging management reviews or TLAAs should be addressed in the license renewal Application. Based on Nuclear Energy Institute (NEI) and NRC guidance, NUREG-0933 and previous license renewal applicants, the following GSIs are addressed for Hope Creek license renewal:

- GSI-156.6.1, Pipe Break Effects on Systems and Components - This GSI involves assumed high energy line breaks in which the effects of the resulting pipe break prevent the operation of mitigating systems, such as the containment or safety injection systems, that are required to mitigate the effects of the break. The GSI is only indirectly related to aging of piping systems, because the probability of failure of a piping system is affected by degradation, including metal fatigue that occurs over time. The aspects of pipe breaks that are associated with degradation are addressed in the aging management review tables associated with mechanical systems in Chapter 3.0 and in the TLAA evaluations of piping components in Chapter 4.0.

- GSI 168, Environmental Qualification of Electrical Equipment – This GSI has been closed by the NRC, as stated in Letter ACRSR-2028 from John T. Larkins, Executive Director of the Advisory Committee on Reactor Safeguards to William D. Travers, Executive Director for Operations, USNRC. EQ is addressed as a TLAA in Section 4.4.

- GSI 190, Fatigue Evaluation of Metal Components for 60-year Plant Life – This GSI addresses fatigue life of metal components and was closed by the NRC. In the closure letter, however, the NRC concluded that licensees should address the effects of reactor coolant environment on component fatigue life as aging management programs are formulated in support of license renewal. Accordingly, the issue of environmental effects on component fatigue life is addressed in Section 4.3.

NUREG-0933 (Reference 1.7.15) was reviewed and there are no new generic issues that involve issues related to license renewal aging management reviews or TLAAs.

2.1.8 CONCLUSION

The scoping and screening methodology described above was used for the Hope Creek IPA to identify the systems, structures, and components that are within the scope of license renewal and require an aging management review. The methodology is consistent with and satisfies the requirements of 10 CFR 54.4 and 10 CFR 54.21(a)(1).

This Page Intentionally Left Blank

2.2 PLANT LEVEL SCOPING RESULTS

Table 2.2-1 lists the Hope Creek systems, structures and commodity groups that were evaluated to determine if they were within the scope of license renewal, using the methodology described in Section 2.1. A reference to the section of the application that contains the scoping and screening results is provided for each in-scope mechanical system, structure and commodity group in the Table. A reference to the applicable Hope Creek UFSAR Section is provided for electrical systems and not in scope mechanical systems.

Table 2.2-1 Plant Level Scoping Results

System, Structure or Commodity Group	In Scope for License Renewal?	Comments
Reactor Vessel, Internals, and Reactor Coolant System		
Control Rods	Yes	2.3.1.1
Fuel Assemblies	Yes	2.3.1.2
Nuclear Boiler Instrumentation	Yes	2.3.1.3
Reactor Internals	Yes	2.3.1.4
Reactor Pressure Vessel	Yes	2.3.1.5
Reactor Recirculation System	Yes	2.3.1.6
Engineered Safety Features		
Automatic Depressurization System (ADS)	Yes	2.3.2.1
Containment Hydrogen Recombiner System	Yes	2.3.2.2
Core Spray System	Yes	2.3.2.3
Filtration, Recirculation, and Ventilation System	Yes	2.3.2.4
High Pressure Coolant Injection (HPCI) System	Yes	2.3.2.5
Hydrogen and Oxygen Analyzer System	Yes	2.3.2.6
Reactor Core Isolation Cooling (RCIC) System	Yes	2.3.2.7
Residual Heat Removal (RHR) System	Yes	2.3.2.8
Vacuum Relief Valve System	Yes	2.3.2.9
Auxiliary Systems		
Auxiliary Building Service and Radwaste HVAC Systems	No	UFSAR Section 9.4.3.1
Auxiliary Steam System	No	UFSAR Section 9.5.9
Chilled Water System	Yes	2.3.3.1
Closed Cycle Cooling Water System	Yes	2.3.3.2
Compressed Air System	Yes	2.3.3.3
Containment Inerting and Purging System	Yes	2.3.3.4

Table 2.2-1 Plant Level Scoping Results

System, Structure or Commodity Group	In Scope for License Renewal?	Comments
Control Area Chilled Water System	Yes	2.3.3.5
Control Rod Drive System	Yes	2.3.3.6
Control Room and Control Area HVAC Systems	Yes	2.3.3.7
Cranes & Hoists	Yes	2.3.3.8
Drywell Air Cooling System	No	UFSAR Section 9.4.5
Elevators & Manlifts	No	UFSAR Section 9.5
Equipment and Floor Drainage System	Yes	2.3.3.9
Fire Protection System	Yes	2.3.3.10
Fire Pump House Ventilation System	Yes	2.3.3.11
Fresh Water Supply System	Yes	2.3.3.12
Fuel Handling and Storage System	Yes	2.3.3.13
Fuel Pool Cooling and Cleanup System	Yes	2.3.3.14
Hardened Torus Vent System	Yes	2.3.3.15
Hydrogen Water Chemistry System	Yes	2.3.3.16
Leak Detection and Radiation Monitoring System	Yes	2.3.3.17
Makeup Demineralizer System	Yes	2.3.3.18
Miscellaneous Ventilation Systems	No	UFSAR Section 9.4
Primary Containment Instrument Gas System	Yes	2.3.3.19
Primary Containment Leakage Rate Testing System	Yes	2.3.3.20
Process and Post-Accident Sampling Systems	Yes	2.3.3.21
Radwaste System	Yes	2.3.3.22
Reactor Building Ventilation System	Yes	2.3.3.23
Reactor Water Cleanup System	Yes	2.3.3.24
Remote Shutdown Panel Room HVAC System	Yes	2.3.3. 25
Service Water Intake Ventilation System	Yes	2.3.3.26

Table 2.2-1 Plant Level Scoping Results

System, Structure or Commodity Group	In Scope for License Renewal?	Comments
Service Water System	Yes	2.3.3.27
Sewage Treatment System	No	UFSAR Section 9.2.4
Standby Diesel Generator Area Ventilation Systems	Yes	2.3.3.28
Standby Diesel Generators and Auxiliary Systems	Yes	2.3.3.29
Standby Liquid Control System	Yes	2.3.3.30
Torus Water Cleanup System	Yes	2.3.3.31
Traversing Incore Probe System	Yes	2.3.3.32
Steam and Power Conversion System		
Circulating Water System	No	UFSAR Section 10.4.5
Condensate Storage and Transfer System	Yes	2.3.4.1
Condensate System	No	UFSAR Section 10.4
Feedwater System	Yes	2.3.4.2
Main Condenser Air Extraction System	No	UFSAR Section 10.4.2
Main Condenser System	Yes	2.3.4.3
Main Generator and Auxiliary System	No	UFSAR Section 10.2.2.
Main Steam System	Yes	2.3.4.4
Main Turbine and Auxiliary System	No	UFSAR Section 10.2
Containment, Structures, and Component Supports		
Auxiliary Boiler Building	Yes	2.4.1
Auxiliary Building Control/Diesel Generator Area	Yes	2.4.2
Auxiliary Building Service/Radwaste Area	Yes	2.4.3
Circulating Water Structures	No	Comment 1
Component Supports Commodity Group	Yes	2.4.4
Fire Water Pump House	Yes	2.4.5

Table 2.2-1 Plant Level Scoping Results

System, Structure or Commodity Group	In Scope for License Renewal?	Comments
Fresh Water Pump Houses	No	Comment 2
Fuel Oil Storage Facilities	No	Comment 3
Gas Station and Fuel Storage Facilities	No	Comment 4
Hazardous Materials Storage Facilities	No	Comment 5
Maintenance Buildings and Shops	No	Comment 6
Materials Storage Facilities	No	Comment 7
Meteorological Tower Structures	No	Comment 8
Office Buildings	No	Comment 9
Piping and Component Insulation Commodity Group	Yes	2.4.6
Primary Containment	Yes	2.4.7
Radwaste Storage Facilities	No	Comment 10
Reactor Building	Yes	2.4.8
Security Structures	No	Comment 11
Service Water Intake Structures	Yes	2.4.9
Sewage Treatment Plant Facilities	No	Comment 12
Shoreline Protection and Dike	Yes	2.4.10
Storage Facilities	No	Comment 13
Switchyard	Yes	2.4.11
Telephone Structures	No	Comment 14
Turbine Building	Yes	2.4.12
Yard Structures	Yes	2.4.13
Electrical and Instrumentation and Control (I&C) Systems		
120 VAC Vital Power System	Yes	UFSAR Section 8.3.1
13.8 KV Station Power System	Yes	UFSAR Section 8.2
24/125/250 V Station DC Power System	Yes	UFSAR Section 8.3.2

Table 2.2-1 Plant Level Scoping Results

System, Structure or Commodity Group	In Scope for License Renewal?	Comments
4.16 KVAC System	Yes	UFSAR Section 8.3.1
480 V Auxiliary System	Yes	UFSAR Section 8.3.1
7.2 KVAC System	No	UFSAR Section 8.3.1
Communication System	Yes	UFSAR Section 9.5.2
Containment Isolation System	Yes	UFSAR Section 7.3.1
Control Room Complex System	Yes	UFSAR Section 7.1
Electrical Commodities	Yes	2.5.2.5
Freeze Protection System	Yes	UFSAR Section 9.5
Grounding & Cathodic Protection Systems	Yes	UFSAR Section 8.3.1.1.5
Lighting System	Yes	UFSAR Section 9.5.3
Miscellaneous Instruments & Control Systems	No	UFSAR Section 7.7
Neutron Monitoring System	Yes	UFSAR Section 7.6.1.4
Offsite 500 KVAC Power System	Yes	UFSAR Section 8.2.1
Reactor Protection System	Yes	UFSAR Section 7.2
Redundant Reactivity Control System	Yes	UFSAR Section 7.6
Remote Shutdown System	Yes	UFSAR Section 7.4.1
Security System	No	UFSAR Section 13.7
Source Range Monitoring System	No	UFSAR Section 7.7.1.1.2.2

Comments:

1. The Circulating Water Structures are nonsafety-related and separated from safety-related systems, structures, and components such that their failure would not impact a safety-related function. The purpose of the Circulating Water Structures is to provide physical support, shelter, and protection for the Circulating Water System components that provide cooling water to the main condenser. The Circulating Water Structures do not perform an intended function for license renewal and are not in the scope of license renewal.

2. The Fresh Water Pump Houses are classified nonsafety-related and separated from safety-related systems, structures, and components such that their failure would not impact a safety-related function. The purpose of the Fresh Water Pump Houses is to provide structural support, shelter and protection for the nonsafety-related Fresh Water Supply System components and its supporting systems. The Fresh Water Pump Houses do not perform an intended function for license renewal and are not in the scope of license renewal.

3. The Fuel Oil Storage Facilities are nonsafety-related and separated from safety-related systems, structures, and components such that their failure would not impact a safety-related function. The purpose of the Fuel Oil Storage Facilities is to provide physical support, shelter and protection, and fluid containment for the fuel oil tanks and fuel oil system components. The Fuel Oil Storage Facilities do not perform an intended function for license renewal and are not in the scope of license renewal.

4. The Gas Station and Fuel Storage Facilities are nonsafety-related and separated from safety-related systems, structures, and components such that their failure would not impact a safety-related function. The purpose of the Gas Station and Fuel Storage Facilities is to provide physical support, shelter and protection, and fluid containment for the gasoline and diesel refuel tanks and pump stations of the Salem Units 1 and 2 and Hope Creek Generating Stations. The Gas Station and Fuel Storage Facilities do not perform an intended function for license renewal and are not in the scope of license renewal.

5. The Hazardous Materials Storage Facilities are nonsafety-related and separated from safety-related systems, structures, and components such that their failure would not impact a safety-related function. The purpose of the Hazardous Materials Storage Facilities is to provide support, shelter, and protection for storage and handling of hazardous materials for both the Salem Units 1 and 2 and Hope Creek Generating Stations. The Hazardous Materials Storage Facilities do not perform an intended function for license renewal and are not in the scope of license renewal.

6. The Maintenance Buildings and Shops are nonsafety-related and separated from safety-related systems, structures, and components such that their failure would not impact a safety-related function. The purpose of the Maintenance Buildings and Shops is to provide support, shelter, and protection for site maintenance personnel and their office space and shop area in support of the Salem Units 1 and 2 and Hope Creek Generating Stations. The Maintenance Buildings and Shops do not perform an intended function for license renewal and are not in the scope of license renewal.

7. The Materials Storage Facilities are nonsafety-related and separated from safety-related systems, structures, and components such that their failure would not impact a safety-related function. The purpose of the Materials Storage Facilities is to provide support, shelter, and protection for stored plant material and equipment, records storage, office space, conference

rooms and supporting facilities, the plant simulators and a fitness center of the Salem Units 1 and 2 and Hope Creek Generating Stations. The Materials Storage Facilities do not perform an intended function for license renewal and are not in the scope of license renewal.

8. The Meteorological Tower Structures are nonsafety-related and separated from safety-related systems, structures, and components such that their failure would not impact a safety-related function. The purpose of the Meteorological Tower Structures is to provide support, shelter and protection for the various meteorological instrumentations utilized to obtain the site meteorological data for the Salem Units 1 and 2 and Hope Creek Generating Stations. The Meteorological Tower Structures do not perform an intended function for license renewal and are not in the scope of license renewal.

9. The Office Buildings are nonsafety-related and separated from safety-related systems, structures, and components such that their failure would not impact a safety-related function. The purpose of the Office Buildings is to provide support, shelter, and protection for plant personnel and facilities that utilize office space, conference rooms and their supporting facilities for the Salem Units 1 and 2 and Hope Creek Generating Stations. The Office Buildings do not perform an intended function for license renewal and are not in the scope of license renewal.

10. The Radwaste Storage Facilities include the Low Level Radwaste Storage Facility and the Independent Spent Fuel Storage Installation. The Low Level Radwaste Storage Facility is nonsafety-related and separated from safety-related systems, structures, and components such that its failure would not impact a safety-related function. The purpose of the Low Level Radwaste Storage Facility is to provide a safe, secure space for temporary storage of low level radwaste generated by the Salem Units 1 and 2 and Hope Creek Generating Stations. The Low Level Radwaste Storage Facility does not perform an intended function and is not in scope for license renewal.

    The Independent Spent Fuel Storage Installation (ISFSI), used by both by the Salem Units 1 and 2 and Hope Creek Generating Stations, consists of reinforced concrete storage pads, a cask fab and staging pad, drainage system, temperature monitoring system, security systems, perimeter intrusion detection system and commercial grade enclosure founded on a concrete foundation. The ISFSI is designed to 10 CFR 72.212 requirements, licensed under general provisions of 10 CFR 72.210, and is not subject to 10 CFR 54 requirements.

11. The Security Structures are nonsafety-related and separated from safety-related systems, structures, and components such that their failure would not impact a safety-related function. The purpose of the Security Structures is to provide support, shelter, and protection for the plant security force and equipment required to control access into the protected area, surrounded by a perimeter fence, as required by 10 CFR 73. The Security Center also provides access and security control point to the protected area. The

Security Structures do not perform an intended function for license renewal and are not in the scope of license renewal.

12. The Sewage Treatment Plant Facilities are nonsafety-related and separated from safety-related systems, structures, and components such that their failure would not impact a safety-related function. The purpose of the Sewage Treatment Plant Facilities is to provide support, shelter and protection for the process systems for treating sanitary waste generated by the Salem Units 1 and 2 and Hope Creek Generating Stations. The Sewage Treatment Plant Facilities do not perform an intended function for license renewal and are not in the scope of license renewal.

13. The Storage Facilities are nonsafety-related and separated from safety-related systems, structures, and components such that their failure would not impact a safety-related function. The purpose of the Storage Facilities is to provide physical support, shelter, and protection for the asphalt storage tank, the boiler and their supporting system components. The Storage Facilities do not perform an intended function for license renewal and are not in the scope of license renewal.

14. The Telephone Structures are nonsafety-related and separated from safety-related systems, structures, and components such that their failure would not impact a safety-related function. The purpose of the Telephone Structures is to provide support, shelter, and protection for the Salem Units 1 and 2 and Hope Creek Generating Stations telecommunication systems. The Telephone Structures do not perform an intended function for license renewal and are not in the scope of license renewal.

This Page Intentionally Left Blank

2.3 SCOPING AND SCREENING RESULTS: MECHANICAL

2.3.1 REACTOR VESSEL, INTERNALS, AND REACTOR COOLANT SYSTEM

The following systems are addressed in this section:

Control Rods (2.3.1.1)
Fuel Assemblies (2.3.1.2)
Nuclear Boiler Instrumentation (2.3.1.3)
Reactor Internals (2.3.1.4)
Reactor Pressure Vessel (2.3.1.5)
Reactor Recirculation System (2.3.1.6)

2.3.1.1 Control Rods

System Purpose

The Control Rods are replaceable, mechanical components consisting of cruciform-shaped stainless steel assemblies containing neutron-absorbing material, designed to be used for flux shaping and for reactivity control during reactor startup, power level changes, and shutdown. The Hope Creek reactor contains 185 control rods. The purpose of the control rod is to absorb neutrons in the reactor core, thereby providing the means to adjust core power shape, compensate for reactivity changes caused by fuel and burnable poison depletion, and fully shutdown the nuclear reaction. They accomplish this purpose, in conjunction with their positioning system (evaluated with the Control Rod Drive System), by providing continuous regulation of the core excess reactivity and reactivity distribution, and by providing sufficient reactivity compensation to render the reactor adequately subcritical from its most reactive condition.

System Operation

The Control Rods are comprised of four stainless steel wings assembled in a cruciform configuration. Each wing assembly is constructed of stainless steel material with boron carbide and/or hafnium as absorbing material. Each control rod has a handle assembly located at the top, and a velocity limiter at the bottom. The velocity limiter is designed to limit control rod free-fall velocity yet have a minimal restricting effect on motion during control rod insertion. The velocity limiter is a fabricated conically shaped assembly permanently attached to the bottom of the absorber section of the control rod, and contains the socket assembly for attachment of the control rod to the control rod drive. The velocity limiter acts as a large clearance piston in the control rod guide tube (evaluated with Reactor Internals) to restrict free-fall velocity of the control rod. In this manner, the energy release associated with the positive reactivity insertion during a control rod drop accident can not exceed an evaluated maximum, which results in no system damage and presents minimal offsite dose consequences. The restrictive force presented by the velocity limiter during control rod insertion is sufficiently low that a reactor scram will result in a high rate of negative reactivity insertion.

The Control Rod Drive System positions the control rods axially in the core, from fully inserted to fully withdrawn or to any of a number of intermediate positions. Each control rod location is in the center of a group of four fuel assemblies (evaluated with Fuel Assemblies), comprising a "cell". Each control rod is capable of being individually positioned, but the usual practice is to position groups of control rods throughout the core to provide reactivity adjustment and flux shaping for optimum power distribution and fuel utilization. Near the end of an operating cycle when core excess reactivity is at a minimum, all control rods are withdrawn to maintain rated reactor power (or highest achievable power if lower than rated) until scheduled shutdown for refueling. Control rod absorption of neutrons chemically depletes the absorber material, and control rod lifetime is monitored. Upon reaching prescribed thresholds, control rods are scheduled for replacement during refueling outages.

For more detailed information, see UFSAR Sections 4.1, 4.2 and 4.6.

System Boundary

The Control Rod license renewal boundary consists of the entire control rod and velocity limiter assembly.

Not included in the scoping boundary of the Control Rods is the Control Rod Drive System and the Fuel Assemblies, which are separately evaluated as license renewal systems, and the control rod guide tubes, which are evaluated with Reactor Internals.

Reason for Scope Determination

The Control Rods meet 10 CFR 54.4(a)(1) because they are safety-related components that are relied upon to remain functional during and following design basis events. The Control Rods are not in scope under 10 CFR 54.4(a)(2) because failure of nonsafety-related portions of the Control Rods would not prevent satisfactory accomplishment of function(s) identified for 10 CFR 54.4(a)(1). The Control Rods are not in scope under 10 CFR 54.4(a)(3) because they are not relied upon in safety analyses or plant evaluations to perform a function that demonstrates compliance with the Commission's regulations for Fire Protection (10 CFR 50.48), Environmental Qualification (10 CFR 50.49), Anticipated Transients Without Scram (10 CFR 50.62), or Station Blackout (10 CFR 50.63).

System Intended Functions

1. Introduce negative reactivity to achieve or maintain subcritical reactor condition. Control Rods are inserted in the reactor core to introduce negative reactivity. 10 CFR 54.4(a)(1)

UFSAR References

4.1
4.2
4.6

License Renewal Boundary Drawings

Not Required

Table 2.3.1-1 Control Rods
Components Subject to Aging Management Review

Component Type	Intended Function
Control Rods (Short-lived)	Control Rods are short-lived and are not subject to aging management review

Aging management review results are not applicable for these components.

2.3.1.2 Fuel Assemblies

System Purpose

The Fuel Assemblies are high integrity components containing the fissionable material that sustains the nuclear reaction when the reactor core is made critical. The purpose of the fuel assemblies is to allow efficient heat transfer from the nuclear fuel to the reactor coolant and to maintain structural integrity providing a controllable, coolable bundle geometry and fission product barrier. They accomplish this purpose by satisfying the thermal-mechanical, nuclear, and hydraulic requirements of the nuclear fuel design conditions within the reactor.

The Hope Creek reactor contains 764 fuel assemblies. During each refueling outage, approximately one-third of the highest depletion bundles are replaced and the positions of the remaining bundles are shuffled as required by the nuclear core design to optimize cycle energy, operating conditions, and fuel economics. Cycle-specific evaluations of the thermal-mechanical design known as supplemental reload licensing submittals are produced to assure that the safety and operational requirements of the fuel product line are met.

System Operation

Each Fuel Assembly is comprised of a fuel bundle and a channel that surrounds it. The fuel rods of each bundle are spaced and supported in a square array by the stainless steel upper and lower tie plates and intermediately placed Zircaloy spacer assemblies. The upper tie plate has a handle used for transferring the bundle from one location to another. The lower tie plate has a nosepiece, which supports the fuel assembly in the reactor. The lower tie plate may incorporate a debris filter grid. The fuel rods used in the assembly consist of high-density ceramic uranium dioxide fuel pellets stacked within Zircaloy cladding, evacuated and backfilled with helium and sealed with welded Zircaloy end plugs. The core reload design specifies the U-235 pellet enrichments used to reduce local peak-to-average fuel rod power ratios. Selected fuel rods within each reload bundle may also incorporate gadolinium as burnable poison. Three types of fuel rods may be used in a fuel bundle; a standard fuel rod with pin-type ends, tie rods with threaded ends that engage the lower tie plate and extend through the upper tie plate to be fastened with nuts and lock tabs, and part-length rods that by design do not extend the full length of the bundle. Water rods may be located in the center of the bundle array, and are used to provide increased neutron moderation.

The bundle channel is fabricated from Zircaloy and provides the flow path outer periphery for bundle coolant flow, supplies structural stiffness to the bundle and transmits seismic loadings to the core internal structures, provides a heat sink during a LOCA, and supplies a surface for control rod guidance within the reactor core. A channel fastener attaches the channel to the bundle at the upper tie plate. Finger springs may be used at the channel-to-lower tie plate interface to control bypass flow. Channels may be a uniform thickness or a thick-thin design with heavier gauge corners and lighter gauge side surfaces. Channel spacing is provided by means of spacer buttons located on the upper portion of the channel.

The above description is representative of fuel assemblies from a typical fuel vendor utilized in the reactor core. Fuel assemblies manufactured by other fuel vendors are used in the reactor core but are not specially described here since the differences in the fuel assemblies construction would not affect the scoping results for fuel assemblies.

For more detailed information, see UFSAR Sections 3.9.5, 4.1.2.1 and 4.2.

System Boundary

The Fuel Assembly license renewal boundary consists of the entire fuel bundle and channel assembly.

Not included in the scoping boundary of the Fuel Assemblies are the fuel support pieces, top guide, or other core internal structures, which are evaluated with Reactor Internals.

Reason for Scope Determination

The Fuel Assemblies meet 10 CFR 54.4(a)(1) because they are safety-related components that are relied upon to remain functional during and following design basis events. The Fuel Assemblies are not in scope under 10 CFR 54.4(a)(2) because failure of nonsafety-related portions of the Fuel Assemblies would not prevent satisfactory accomplishment of function(s) identified for 10 CFR 54.4(a)(1). The Fuel Assemblies are not in scope under 10 CFR 54.4(a)(3) because they are not relied upon in safety analyses or plant evaluations to perform a function that demonstrates compliance with the Commission's regulations for Fire Protection (10 CFR 50.48), Environmental Qualification (10 CFR 50.49), Anticipated Transients Without Scram (10 CFR 50.62), or Station Blackout (10 CFR 50.63).

System Intended Functions

1. Maintain reactor core assembly geometry. The Fuel Assemblies assure integrity of the nuclear fuel configuration, maintaining a coolable geometry and providing a cladding barrier to contain the fission products released from the fuel throughout the design life of the fuel rod. 10 CFR 54.4(a)(1)

UFSAR References

3.9.5
4.1.2.1
4.2

License Renewal Boundary Drawings

Not Required

Table 2.3.1-2 Fuel Assemblies
Components Subject to Aging Management Review

Component Type	Intended Function
Fuel Assemblies (Short-lived)	Fuel Assemblies are short-lived and are not subject to aging management review

Aging management review results are not applicable for these components.

2.3.1.3 Nuclear Boiler Instrumentation

System Purpose

Nuclear Boiler Instrumentation is an instrumentation system designed to provide the means to measure parameters of reactor vessel level, pressure, temperature, core flow, core plate differential pressure, primary containment (drywell) pressure, main condenser pressure, and main turbine first stage pressure.

The purpose of Nuclear Boiler Instrumentation is to provide signals to the Reactor Protection System, Redundant Reactivity Control System and the various emergency core cooling system logic, for initiation of protective system functions such as reactor scram, emergency core cooling and engineered safety feature systems, primary containment isolation, recirculation pump trip, and alternate rod insertion. Additionally, Nuclear Boiler Instrumentation provides reactor vessel level inputs to the feedwater control system for reactor vessel level control. Nuclear Boiler Instrumentation also provides the operator with indications to support procedural activities performed during normal and post-accident operation. It accomplishes these purposes by utilizing specific instruments to monitor reactor vessel level, pressure, temperature, core flow, core plate differential pressure, primary containment pressure, main condenser pressure, and main turbine first stage pressure.

System Operation

Nuclear Boiler Instrumentation is comprised of sensing lines, flow restricting orifices, isolation valves, excess flow check valves, transmitters, condensing chambers, and instruments.

Reactor vessel level is measured by comparing the actual water level in the reactor vessel (variable leg) to a constant height of water column in the reference leg. Both the variable leg and the reference leg experience the same applied steam pressure from the reactor vessel. Steam from the vessel enters the reference leg and condenses in a chamber to keep the reference leg filled with water, with overflow returned to the vessel. The Control Rod Drive System also provides a constant source of make-up water (backfill) to the reference legs to prevent displacement of reference leg water when non-condensable gases come out of solution. Instrument calibrations compensate for temperature-induced variations in the reference legs as required. The difference in the measured pressures is processed into the reactor vessel level measurement.

Reactor vessel pressure is measured by pressure instruments utilizing the same piping that is used to measure the pressure in the reactor vessel level instrument reference legs.

Reactor vessel temperature is measured through thermocouples mounted in specific locations on the reactor vessel shell, heads, flange, skirt, and feedwater nozzles to provide indication of the vessel metal temperature (evaluated with the Miscellaneous Instruments & Control Systems).

Core plate differential pressure is measured by instrumentation that compares pressures below and above the core plate. The pressure below core plate is also used as the common jet pump discharge pressure (high pressure) for determination of jet pump flow and for the high pressure input for reactor bottom head drain differential pressure. The pressure above core plate is used by the Control Rod Drive System for indication of reactor vessel pressure.

Core flow is measured by instrumentation that determines the total flow through the jet pumps. Each jet pump flow is measured through a tap on the jet pump diffuser below the slip fit section (low pressure). This low pressure is compared to the common jet pump discharge pressure (high pressure) to produce a pressure differential that is converted to a flow signal. The signals for the ten jet pumps in each recirculation loop are summed by the jet pump loop flow summer to determine the jet pump loop flow. The two jet pump loop flows are summed to determine the core flow. Each of the four fully calibrated jet pumps (two per recirculation loop) has one additional pressure tap that is located on the bottom of the jet pump diffuser (high pressure). This high pressure is compared to the low pressure from the tap on the pump diffuser below the slip fit section to produce a pressure differential that is converted to a flow signal. These flow signals are used in the calibration of the two jet pump loop flow summers.

Primary containment (drywell) pressure is measured by pressure transmitters connected to sensing lines open to primary containment atmosphere.

Main condenser pressure is measured by pressure transmitters connected to sensing lines.

Main turbine first stage pressure is measured by pressure transmitters connected to sensing lines.

For more detailed information, see UFSAR Section 5.1.

System Boundary

The boundary of the Nuclear Boiler Instrumentation license renewal system begins at the individual reactor vessel nozzles and other attachment points, continues through the condensing chambers (for reference legs), instrument piping and tubing, and ends with the instrument(s) to which the sensing lines are routed. The boundary for the wide range level instrument reference leg begins with its condensing chamber, since the Main Steam System includes the reactor vessel head vent piping up to the condensing chamber (evaluated with the Main Steam System).

For attachment points on the Reactor Pressure Vessel, the associated instrument nozzle is evaluated separately for license renewal with the Reactor Pressure Vessel license renewal system.

The boundary for the core plate differential pressure instrumentation begins at the sensing line attachment point on the Reactor Pressure Vessel. The core plate differential pressure sensing line is a pipe-in-pipe arrangement that has an inner and outer pipe. The inner pipe begins below the core plate while the outer pipe begins above the core plate. The sensing line continues through the instrument piping and tubing and ends with the associated instruments. The Nuclear Boiler Instrumentation license renewal system includes the portion of the sensing line external of the Reactor Pressure Vessel. The portion of the sensing line internal to the Reactor Pressure Vessel is evaluated separately for license renewal with the Reactor Internals license renewal system.

The boundary for the primary containment (drywell) pressure instrumentation begins at the sensing line attachment points to the primary containment. These sensing lines continue through the instrument piping and tubing and end with the pressure transmitters.

The boundary for the main condenser pressure instrumentation begins at the sensing line attachment points to the main condenser. These sensing lines continue through the instrument piping and tubing and end with the pressure transmitters.

The boundary for the main turbine first stage pressure instrumentation begins at the sensing line attachment points to the high pressure turbine. These sensing lines continue through the instrument piping and tubing and end with the pressure transmitters.

The Nuclear Boiler Instrumentation license renewal system boundary includes all associated piping, condensing chambers, isolation valves, excess flow check valves and instruments for monitoring the specific parameters. All associated piping, components, and instrumentation contained within the flow path described above are included in the system boundary.

Also included in the license renewal scoping boundary of Nuclear Boiler Instrumentation are those portions of nonsafety-related piping and equipment that extend beyond the safety-related/nonsafety-related interface up to the location of the first seismic anchor, or to a point no longer in proximity to equipment performing a safety-related function, whichever extends furthest. This includes the nonsafety-related portions of the system located within the Reactor Building. Included in this boundary are pressure retaining components relied upon to preserve the leakage boundary intended function of this portion of the system. For more information, refer to the license renewal boundary drawings for identification of this boundary, shown in red.

Not included in the scoping boundary of the Nuclear Boiler Instrumentation license renewal system are the instruments that provide signals for steam line pressure (evaluated with the Main Steam System) and instrumentation associated with reactor head seal leakage (evaluated with the Main Steam System). The thermocouples monitoring reactor vessel temperature are evaluated with the Miscellaneous Instruments & Control Systems and are not included in the scoping boundary of the Nuclear Boiler Instrumentation license renewal system. As previously discussed, not included in the scoping boundary of the Nuclear Boiler Instrumentation license renewal system is the reactor vessel head vent piping up to the wide range level instrument condensing chamber, since this piping is evaluated with the Main Steam System. Also not included in the scoping boundary of the Nuclear Boiler Instrumentation license renewal system are the instruments that provide signals to the Reactor Water Cleanup System and the post accident liquid and gas sampling system (evaluated with the Process and Post-Accident Sampling System).

Not included in the scoping boundary of the Nuclear Boiler Instrumentation System are the following interfacing systems, which are separately evaluated as license renewal systems:

Control Rod Drive System
Main Steam System
Process and Post-Accident Sampling System
Reactor Internals
Reactor Pressure Vessel
Reactor Water Cleanup System

Reason for Scope Determination

Nuclear Boiler Instrumentation meets 10 CFR 54.4(a)(1) because it is a safety-related system that is relied upon to remain functional during and following design basis events. It meets 10 CFR 54.4(a)(2) because failure of nonsafety-related portions of the system could prevent satisfactory accomplishment of function(s) identified for 10 CFR 54.4(a)(1). It also meets 10 CFR 54.4(a)(3) because it is relied upon in the safety analyses or plant evaluations to perform a function that demonstrates compliance with the Commission's regulation for Fire Protection (10 CFR 50.48), Environmental Qualification (10 CFR 50.49), Anticipated Transient Without Scram (10 CFR 50.62), and Station Blackout (10 CFR 50.63).

System Intended Functions

1. Provide reactor coolant pressure boundary. Reactor Vessel pressure and differential pressure sensing lines attach to reactor vessel nozzles or other reactor coolant pressure boundary piping. 10 CFR 54.4(a)(1)

2. Sense process conditions and generate signals for reactor trip or engineered safety features actuation. Provides input signals to reactor protection system, emergency core coolant system, and containment isolation for reactor control to prevent safety limits from being exceeded. 10 CFR 54.4(a)(1)

3. Provide primary containment boundary. Sensing lines penetrating primary containment are provided with isolation valves and excess flow check valves. 10 CFR 54.4(a)(1)

4. Resist nonsafety-related SSC failure that could prevent satisfactory accomplishment of a safety related function. 10 CFR 54.4(a)(2)

5. Relied upon in safety analyses or plant evaluations to perform a function that demonstrates compliance with the Commission's regulations for Fire Protection (10 CFR 50.48). Nuclear Boiler Instrumentation provides process variables for monitoring and controls to ensure that safe shutdown of the reactor can be achieved during fire conditions. 10 CFR 54.4(a)(3)

6. Relied upon in safety analyses or plant evaluations to perform a function that demonstrates compliance with the Commission's regulations for Environmental Qualification (10 CFR 50.49). Nuclear Boiler Instrumentation has components that are in the Environmental Qualification Program. 10 CFR 54.4(a)(3)

7. Relied upon in safety analyses or plant evaluations to perform a function that demonstrates compliance with the Commission's regulations for Anticipated Transients Without Scram (10 CFR 50.62). Nuclear Boiler Instrumentation piping is used by the Redundant Reactivity Control System to generate signals for Alternate Rod Insertion. 10 CFR 54.4(a)(3)

8. Relied upon in safety analyses or plant evaluations to perform a function that demonstrates compliance with the Commission's regulations for Station Blackout (10 CFR 50.63). Nuclear Boiler Instrumentation provides input signals for High Pressure Coolant Injection System and Reactor Core Isolation Cooling System initiations. 10 CFR 54.4(a)(3)

UFSAR References

5.1
7.4
7.7.1.3
Appendix 9.A

License Renewal Boundary Drawings

LR-M-01-1, Sheet 1
LR-M-38-0, Sheet 1
LR-M-42-1, Sheet 1
LR-M-44-1, Sheet 1
LR-M-46-1, Sheet 2

Table 2.3.1-3 Nuclear Boiler Instrumentation
Components Subject to Aging Management Review

Component Type	Intended Function
Bolting	Mechanical Closure
Bolting (Class 1)	Mechanical Closure
Class 1 Piping, Fittings and Branch Connections < NPS 4"	Pressure Boundary
Condensing Chamber (Class 1)	Pressure Boundary
Piping and Fittings	Leakage Boundary
Piping and Fittings	Pressure Boundary
Restricting Orifices (Class 1)	Pressure Boundary
Restricting Orifices (Class 1)	Throttle
Valve Body	Leakage Boundary
Valve Body	Pressure Boundary
Valve Body (Class 1)	Pressure Boundary

The aging management review results for these components are provided in:

Table 3.1.2-1 Nuclear Boiler Instrumentation
Summary of Aging Management Evaluation

2.3.1.4 Reactor Internals

System Purpose

The Reactor Internals are a mechanical system, whose components are contained within the reactor pressure vessel and extend beyond the reactor pressure vessel to form a portion of the reactor coolant pressure boundary.

The Reactor Internals consist of the core shroud, core plate, core spray lines and spargers, fuel supports, control rod drive assemblies, instrumentation dry tubes, jet pump assemblies, steam dryer assembly, and the top guide.

The purpose of the reactor internals system is to provide support for the core and other internal components, maintain the fuel in a coolable geometry during normal and accident conditions, provide proper distribution of the coolant delivered to the vessel, provide a floodable volume, and maintain the reactor coolant pressure boundary. It accomplishes this by providing support and spacing of the fuel, control rod blades, and control rod drives, to assure both coolant flow and capability to add negative reactivity. It also accomplishes this by providing delivery of emergency core cooling to the reactor fuel through its piping and distribution components. A floodable volume is maintained by the configuration of the internal components. It also extends beyond the reactor pressure vessel to form a pressure boundary for connecting the control rod drives and the incore neutron flux monitoring devices.

System Operation

The shroud is a stainless steel cylinder that surrounds the reactor core and provides a barrier to separate the upward flow of the coolant through the reactor core from the downward recirculation flow. Bolted on top of the shroud is the steam separator assembly, which forms the top of the core discharge plenum. This provides a mixing chamber before the steam-water mixture enters the steam separator. The steam dryer is located above the steam separator. It is supported by steam dryer support brackets welded to the reactor pressure vessel wall and is held down by steam dryer hold down brackets in the reactor vessel top head.

The shroud support (which is composed of a cylinder, plate and legs), join the bottom of the shroud to the vessel wall. The shroud support provides an annular baffle between the reactor pressure vessel and the shroud. The shroud support carries all the vertical weight of the shroud, shroud head and steam separators, top guide, core plate, the peripheral fuel assemblies, and the jet pump diffusers. The jet pump assemblies provide a continuous internal circulation of reactor coolant. The jet pump diffusers penetrate the shroud support to introduce the coolant to the inlet plenum below the core. The combination of the shroud, shroud support and jet pump assemblies ensure a floodable volume for the reactor core should a break occur in the recirculation piping.

The core plate is a circular stainless steel plate with bored holes, which is stiffened with a rim and beam structure. The core plate provides lateral support and guidance for the control rod guide tubes, in-core flux monitor guide tubes, peripheral fuel supports, and startup neutron sources. The entire assembly is bolted to a support ledge on the lower portion of the shroud.

The top guide is formed by a series of stainless steel beams joined at right angles to form square openings and fastened to a peripheral rim of the core shroud. Each opening provides

lateral support for the fuel assemblies. Wedge blocks between the top guide and the shroud wall provide lateral restraint. The control rod guide tubes extend up from the control rod drive housing through holes in the core plate. Each tube is designed as a lateral guide for the control rod and as the vertical support for the fuel support piece, which holds the four fuel assemblies surrounding the control rod. Except for the weight of the peripheral fuel assemblies, the entire weight of the fuel is carried by the guide tubes, and is transmitted to the bottom head through the Control Rod Drive (CRD) housings and stub tubes. For more detail see UFSAR Section 3.9.5.

System Boundary

The boundary for the reactor internals includes all components that are inside the reactor vessel except the fuel assemblies and the control blades, both of which are short-lived components and are evaluated separately in the Fuel Assemblies and Control Rods license renewal systems. This includes the major components described above plus additional components such as the feedwater spargers, the core spray piping and spargers, low pressure coolant injection couplings, core plate differential pressure sensing line, incore nuclear instrumentation tubes, and reactor internals modification/repair hardware. The incore instrumentation (SRM - Source Range Monitoring, IRM - Intermediate Range Monitoring, LPRM - Local Power Range Monitor, and TIP - Traveling In-core Probe) is evaluated as separate license renewal systems.

The following components of reactor internals perform a safety related function and therefore are within the scope of license renewal: the shroud, shroud support and access hole cover, core spray piping and spargers, low pressure coolant injection couplings, core plate and core plate bolts, fuel supports, control rod guide tubes and housings, top guide, jet pumps, and incore flux monitor guide tubes and housings. The steam dryer is also included in the scope of license renewal. The steam dryer does not perform a safety related function (based on industry experience), however, it is included in the license renewal scope, because failure of the steam dryer could potentially prevent satisfactory accomplishment of the safety related functions.

The following components of reactor internals are not required to support intended functions and are not included within the scope of license renewal: the feedwater sparger; the shroud head and steam separator assembly, core plate differential sensing lines, the standby liquid control / core dp internal piping, and the surveillance sample holders. A safety assessment for these components has been performed and reported in BWRVIP-06. The evaluation concluded that these components do not perform a safety related function. This report also concluded that failure of these components will not result in consequential failure of any safety related equipment.

The control rod drive mechanisms are separately evaluated with the license renewal system Control Rod Drive System. The reactor vessel, vessel nozzles, vessel instrumentation penetrations, control rod drive stub tubes, and thermal sleeves are separately evaluated with the license renewal system Reactor Pressure Vessel. The incore neutron flux monitors are evaluated separately with the Neutron Monitoring System.

Reason for Scope Determination

The Reactor Internals System meets 10 CFR 54.4(a)(1) because it is a safety-related system that is relied upon to remain functional during and following design basis events. It meets 10 CFR 54.4(a)(2) because failure of nonsafety-related portions of the system could prevent satisfactory accomplishment of function(s) identified for 10 CFR 54.4(a)(1). It also meets 10 CFR 54.4(a)(3) because it is relied upon in safety analyses or plant evaluations to perform a function that demonstrates compliance with the Commission's regulations for Fire Protection (10 CFR 50.48), Anticipated Transients Without Scram (10 CFR 50.62), and Station Blackout (10 CFR 50.63). The Reactor Internals System is not relied upon in any safety analyses or plant evaluations to perform a function that demonstrates compliance with the Commission's regulations for Environmental Qualification (10 CFR 50.49).

System Intended Functions

1. Provide reactor coolant pressure boundary. The control rod drive housings and incore flux monitor housings are part of the reactor coolant pressure boundary. 10 CFR 54.4(a)(1)

2. Maintain reactor core assembly geometry and a floodable volume. The reactor internal components in conjunction with the reactor vessel are designed to provide physical support for the fuel, steam dryer and other components and to maintain fuel configuration and clearances during normal and accident conditions. Maintain geometry within the reactor to ensure core reactivity control and core flooding, and core cooling capability. 10 CFR 54.4(a)(1)

3. Provide emergency core cooling where the equipment provides coolant directly to the core. The core spray piping and spargers and low pressure coolant injection couplings distribute emergency core cooling flow to the reactor core. 10 CFR 54.4(a)(1)

4. Resist non-safety related SSC failure that could prevent satisfactory accomplishment of a safety related function. Nonsafety-related portions of the system that are required for structural support could interact with safety-related portions of the system. 10 CFR 54.4(a)(2)

5. Relied upon in safety analyses or plant evaluations to perform a function that demonstrates compliance with the Commission's regulations for Fire Protection (10 CFR 50.48). The core spray sparger and piping inside the reactor vessel is credited for cooling in the fire safe shutdown analysis. 10 CFR 54.4(a)(3)

6. Relied upon in safety analyses or plant evaluations to perform a function that demonstrates compliance with the Commission's regulations for Anticipated Transients Without Scram (10CFR50.62). Standby Liquid Control System injects through the core spray piping and spargers. 10 CFR 54.4(a)(3)

7. Relied upon in safety analyses or plant evaluations to perform a function that demonstrates compliance with the Commission's regulations for Station Blackout (10 CFR 50.63). High pressure coolant injection injects through the core spray piping and spargers. 10 CFR 54.4(a)(3)

UFSAR References

1.2.4.1
3.9.5
5.1.6
5.3
5.4.1
9A.5

License Renewal Boundary Drawings

Not Required

Table 2.3.1-4 **Reactor Internals**
Components Subject to Aging Management Review

Component Type	Intended Function
Core Shroud and Core Plate (Access hole cover-welded covers)	Structural Support to maintain core configuration and flow distribution
Core Shroud and Core Plate (Core Shroud-Upper, Central, Lower)	Pressure Boundary
Core Shroud and Core Plate (Core Shroud-Upper, Central, Lower)	Structural Support
Core Shroud and Core Plate (Core plate, core plate bolts, peripheral fuel supports)	Structural Support to maintain core configuration and flow distribution
Core Shroud and Core Plate (LPCI coupling)	Direct Flow
Core Shroud and Core Plate (Shroud support cylinder, plate, column)	Pressure Boundary
Core Shroud and Core Plate (Shroud support cylinder, plate, column)	Structural Support to maintain core configuration and flow distribution
Core Spray Lines and Spargers (Core spray lines (headers), spray rings, spray nozzles, thermal sleeve)	Direct Flow
Fuel Supports and Control Rod Drive Assemblies (Control rod drive housing)	Pressure Boundary
Fuel Supports and Control Rod Drive Assemblies (Control rod drive housing)	Structural Support to maintain core configuration and flow distribution
Fuel Supports and Control Rod Drive Assemblies (Control rod guide tube)	Structural Support to maintain core configuration and flow distribution
Fuel Supports and Control Rod Drive Assemblies (Orificed fuel support)	Structural Support to maintain core configuration and flow distribution
Instrumentation (IRM dry tubes, SRM dry tubes)	Pressure Boundary
Instrumentation (IRM dry tubes, SRM dry tubes)	Structural Support
Instrumentation (Incore neutron flux monitor guide tubes)	Structural Support
Instrumentation (Incore neutron flux monitor housing)	Pressure Boundary
Instrumentation (Incore neutron flux monitor housing)	Structural Support

Component Type	Intended Function
Jet Pump Assemblies (Riser brace,beam/bolt assembly, riser pipe, inlet, mixer, restrainer bracket, wedge, diffuser and tailpipe, adapter/lower ring, auxiliary spring wedges and slip joint clamps/bolts)	Pressure Boundary
Jet Pump Assemblies (Riser brace,beam/bolt assembly, riser pipe, inlet, mixer, restrainer bracket, wedge, diffuser and tailpipe, adapter/lower ring, auxiliary spring wedges and slip joint clamps/bolts)	Structural Support
Steam Dryers	Structural Support
Top Guide	Structural Support to maintain core configuration and flow distribution

The aging management review results for these components are provided in:

Table 3.1.2-2 Reactor Internals
Summary of Aging Management Evaluation

2.3.1.5 Reactor Pressure Vessel

System Purpose

The Reactor Pressure Vessel contains the reactor core, the reactor internals, and reactor core coolant moderator.

The Reactor Pressure Vessel is a normally operating system designed to contain the reactor coolant and facilitate the transfer of heat from the core. The Reactor Pressure Vessel, in conjunction with the reactor internals, provides a floodable volume to assure adequate core cooling in the event of a breach in the coolant boundary external to the reactor pressure vessel. The Reactor Pressure Vessel also provides support for the connected reactor coolant pressure boundary piping.

The Reactor Pressure Vessel consists of the following major components: the cylindrical vessel shell and flange, the top head and flange, the bottom head, welds, nozzles, safe ends, closure studs, internal supports, and external supports, including the steel skirt assembly. The Reactor Pressure Vessel is in scope for license renewal. The Reactor Pressure Vessel has interfaces with other systems that are not in the license renewal boundary of the Reactor Pressure Vessel, and are evaluated separately. These systems are the Core Spray, Feedwater, Main Steam, Nuclear Boiler Instrumentation, Reactor Internals, Reactor Recirculation, Reactor Water Cleanup, and the Residual Heat Removal System.

The purpose of the Reactor Pressure Vessel is to form part of the reactor coolant boundary and to serve as a radioactive material barrier during normal operations and following abnormal operational transients and accidents. The Reactor Pressure Vessel accomplishes its purpose through its cylindrical vessel shell and flange, the top head and flange, the bottom head, welds, nozzles, safe ends, closure studs, internal supports, and external supports, including the steel skirt assembly.

The top of the skirt is welded to the bottom of the vessel. The base of the skirt is continuously supported by a ring girder fastened to a concrete foundation, which carries the load through the drywell to the Reactor Building foundation slab.

System Operation

The Reactor Pressure Vessel is comprised of the cylindrical vessel shell and flange, the top head and flange, the bottom head, welds, nozzles, safe ends, closure studs, internal supports, and external supports, including the steel skirt assembly.

The vessel flanges are sealed with two concentric metal seal rings designed to permit no detectable leakage.

The nozzle for the Standby Liquid Control pipe was designed to minimize thermal shock effects on the reactor vessel. However, the Standby Liquid Control system discharge has not been routed to this nozzle as the standby liquid control system utilizes core spray loop "A" to inject poison. The control rod drive return nozzle was capped and was not used for its original design function and the reactor head spray piping and spray nozzle have been removed as part of a modification and a blind flange installed.

For additional details see UFSAR Sections 1.2.4, 3.9.5, 4.1, 5.1, 5.3, and 9A.5.

System Boundary

The boundary for the Reactor Pressure Vessel includes the vessel shell and flange, top head and flange, bottom head, vessel closure studs and nuts, vessel nozzles (bottom head drain, core spray, control rod drive return, feedwater, head spray, head vent, instrumentation, jet pump instrumentation, low pressure coolant injection, main steam, recirculation inlet and outlet, seal leak detection, spare, and standby liquid control/core DP), nozzle safe ends and welds, nozzle thermal sleeves (core spray, feedwater, low pressure coolant injection and recirculation inlet), vessel penetrations (control rod drive stub tubes and incore housings), vessel skirt, vessel shell course welds, and the vessel attachment welds.

Not included in the scoping boundary of the Reactor Pressure Vessel are the following interfacing systems that are evaluated separately:

Core Spray System
Feedwater System
Main Steam System
Nuclear Boiler Instrumentation System
Reactor Internals
Reactor Recirculation System
Reactor Water Cleanup System
Residual Heat Removal System

Reason for Scope Determination

The Reactor Pressure Vessel meets 10 CFR 54.4(a)(1) because it is a safety-related system that is relied upon to remain functional during and following design basis events. The Reactor Pressure Vessel is not in scope under 10 CFR 54.4(a)(2) because there are no nonsafety-related components whose failure could prevent satisfactory accomplishment of function(s) identified for 10 CFR 54.4(a)(1). The Reactor Pressure Vessel is in scope under 10 CFR 54.4(a)(3) because it is relied upon in safety analyses or plant evaluations to perform a function that demonstrates compliance with the Commission's regulations for Fire Protection (10 CFR 50.48), Anticipated Transients Without Scram (10 CFR 50.62) and Station Blackout (10 CFR 50.63). The Reactor Pressure Vessel is not relied upon in any safety analyses or plant evaluations to perform a function that demonstrates compliance with the Commission's regulation for Environmental Qualification (10 CFR 50.49).

System Intended Functions

1. Provide reactor coolant pressure boundary. The reactor pressure vessel maintains the integrity of the reactor coolant pressure boundary. The reactor pressure vessel provides structural support for connected reactor coolant pressure boundary piping. 10CFR54.4(a)(1)

2. Maintain reactor core assembly geometry. The reactor pressure vessel in conjunction with the reactor internals provides physical support for the core and other reactor vessel internals. The arrangement provides a means to distribute coolant to the fuel assemblies in the core, it provides a floodable volume to ensure the core can be adequately cooled in the event of a

breach in the coolant boundary external to the reactor pressure vessel, and also ensures deformation is limited to ensure control rods and emergency cooling systems can perform their intended safety functions. 10CFR54.4(a)(1)

3. Relied upon in safety analyses or plant evaluations to perform a function that demonstrates compliance with the Commission's regulations for Fire Protection (10CFR50.48). The reactor pressure vessel is credited in the fire safe shutdown analysis. 10CFR54.4(a)(3)

4. Relied upon in safety analyses or plant evaluations to perform a function that demonstrates compliance with the Commission's regulations for Anticipated Transients Without Scram (10 CFR 50.62). The reactor pressure vessel is credited in the Anticipated Transients Without Scram analysis. 10CFR54.4(a)(3)

5. Relied upon in safety analyses or plant evaluations to perform a function that demonstrates compliance with the Commission's regulations for Station Blackout (10 CFR 50.63). The reactor pressure vessel is credited in the Station Blackout analysis. 10CFR54.4(a)(3)

UFSAR References

1.2.4
3.9.5
4.1
5.1
5.3
9A.5

License Renewal Boundary Drawings

Not Required

Table 2.3.1-5 Reactor Pressure Vessel Components Subject to Aging Management Review

Component Type	Intended Function
Bolting (Class 1) Head Spray, Spare Flanges, CRDs, and Incore Neutron Monitors	Mechanical Closure
Bolting (Class 1) Top Head Studs and Nuts	Mechanical Closure
Nozzle (Bottom Head Drain)	Pressure Boundary
Nozzle (CRD Return)	Pressure Boundary
Nozzle (Core Spray)	Pressure Boundary
Nozzle (Feedwater)	Pressure Boundary
Nozzle (Head Spray)	Pressure Boundary
Nozzle (Head Vent)	Pressure Boundary
Nozzle (Instrumentation - Beltline)	Pressure Boundary
Nozzle (Instrumentation)	Pressure Boundary
Nozzle (Jet Pump Instrumentation)	Pressure Boundary
Nozzle (Low Pressure Coolant Injection)	Pressure Boundary
Nozzle (Main Steam)	Pressure Boundary
Nozzle (Recirculation Inlet & Outlet)	Pressure Boundary
Nozzle (Seal Leak Detection)	Pressure Boundary
Nozzle (Spare on Head)	Pressure Boundary
Nozzle (Standby Liquid Control / Core DP)	Pressure Boundary
Nozzle Safe Ends and Welds (Core Spray)	Pressure Boundary
Nozzle Safe Ends and Welds (Feedwater)	Pressure Boundary
Nozzle Safe Ends and Welds (Head Spray)	Pressure Boundary
Nozzle Safe Ends and Welds (Jet Pump Instrumentation)	Pressure Boundary
Nozzle Safe Ends and Welds (Low Pressure Coolant Injection)	Pressure Boundary
Nozzle Safe Ends and Welds (Main Steam)	Pressure Boundary
Nozzle Safe Ends and Welds (Recirculation Inlet and Outlet)	Pressure Boundary
Nozzle Safe Ends and Welds (Seal Leak Detection, Spare, & Head Vent)	Pressure Boundary

Component Type	Intended Function
Nozzle Safe Ends and Welds (Standby Liquid Control / Core DP)	Pressure Boundary
Nozzle Thermal Sleeves (Core Spray)	Direct Flow
Nozzle Thermal Sleeves (Feedwater)	Direct Flow
Nozzle Thermal Sleeves (Low Pressure Coolant Injection)	Direct Flow
Nozzle Thermal Sleeves (Recirculation Inlets)	Direct Flow
Penetration (CRD Stub Tubes)	Pressure Boundary
Penetration (CRD Stub Tubes)	Structural Support
Penetration (Incore Housings)	Pressure Boundary
Reactor Coolant Pressure Boundary Components	Pressure Boundary
Reactor Vessel (Bottom Head)	Pressure Boundary
Reactor Vessel (External Attachments)	Structural Support
Reactor Vessel (Intermediate, Lower Intermediate and Lower Shell Sections)	Pressure Boundary
Reactor Vessel (Internal Attachments)	Structural Support
Reactor Vessel (Shell Flange, Upper and Upper Intermediate Shell Sections)	Pressure Boundary
Reactor Vessel (Top Head and Flange)	Pressure Boundary

The aging management review results for these components are provided in:

Table 3.1.2-3 Reactor Pressure Vessel
Summary of Aging Management Evaluation

2.3.1.6 Reactor Recirculation System

System Purpose

The Reactor Recirculation System is a normally operating mechanical system that provides forced circulation of reactor coolant through the core for heat removal and the ability to maintain a reactor vessel floodable volume in the event of a piping integrity failure. The system consists of the Reactor Recirculation main loop piping, recirculation pumps and motors, recirculation motor generator sets, recirculation system flow control, and recirculation pump trip logic. The main loop piping, recirculation pumps, and recirculation pump trip are in scope for license renewal. However the motor generator sets, recirculation pump motor, and flow control portions of the system are not required to perform intended functions and are not in scope. System components within the reactor vessel are described in the Reactor Internals.

The purpose of the Reactor Recirculation System is to provide forced circulation of reactor coolant through the core, providing a means to control reactor power within a limited range without the need for manipulation of the control rods. It accomplishes this purpose by delivering recirculated drive water flow to the reactor vessel through two separate pumped loops, each with an individually controllable variable speed pump, five jet pump risers, and ten jet pumps.

System Operation

The Reactor Recirculation System is comprised of two separate recirculation loops and has been sized to provide a total drive flow capacity required to develop the necessary core flow at rated load. Each loop contains suction and discharge piping, a motor operated suction isolation valve, motor driven recirculation pump, motor operated discharge isolation valve, and associated instrumentation and drain valves. Each recirculation pump is a centrifugal unit with a mechanical cartridge-type two-stage shaft seal. Each recirculation pump is driven by a variable speed motor powered by a recirculation motor generator set, comprised of a constant speed motor, synchronous generator, interconnecting variable speed fluid coupling, and associated instrumentation and controls. Under normal reactor power conditions, both recirculation loops are in operation, with both pumps operating at the same speed.

The flowpath for recirculated coolant through each of the loops is as follows: reactor coolant enters the vessel annulus region, the area between the shroud and the vessel wall, and then exits the Reactor Vessel through the loop's outlet nozzle and into the recirculation pump suction piping. The coolant then passes through the recirculation pump and exits to a distribution header. From the distribution header, flow is split between five jet pump risers. Each jet pump riser enters the vessel and discharges through two jet pump nozzles as drive flow. This drive flow mixes with coolant from the annulus region (driven flow) in the jet pump throat and exits the jet pump in the lower head area as total flow. Flow then passes through orifices at the bottom of the core and flows upward through the core where bulk boiling produces steam. The steam-water mixture enters the moisture separators and the steam dryers. The water separated from the steam flows downward to the annulus region where it mixes with the incoming feedwater. The coolant flows downward in the annulus region to the outlet nozzles, repeating the flow path. The recirculation pump motor oil cooler and recirculation pump seal cooler are provided cooling water from the reactor auxiliaries cooling plant system that is part of the Closed Cycle Cooling Water System. These coolers are not in the scope of license renewal because these coolers are physically enclosed and do not have

the potential for spatial interaction with components. The motor air cooler receives cooling water from the Chilled Water System and is evaluated with the Chilled Water System.

Recirculation pump speed and flow control is accomplished by varying the speed of the motor generator set generator. This is performed by a speed control unit consisting of an operator for each fluid coupling scoop tube, an electric tachometer on each generator shaft, a remote manual speed controller for each motor generator set, a master remote control device for both pumps, and associated electronic equipment. The operating speed of both pumps is normally adjusted individually with the manual speed controller. The tachometer on each generator shaft provides a feedback signal for comparison of actual versus selected speeds.

Recirculation Pump Trip is an instrument-controlled function of the Reactor Recirculation System that decreases the pressure and temperature transient during certain transients or an Anticipated Transient Without Scram event by tripping circuit breakers between the motor generator set and the reactor coolant pump. The Reactor Protection System and Redundant Reactivity Control System (separately evaluated as license renewal systems) each supply a signal to the Recirculation Pump Trip Logic causing a trip of both recirculation pumps.

For more detailed information, see UFSAR sections 5.1.7, 5.4.1, 6.2.4.1, 7.6.1, and 7.7.1.

System Boundary

The Reactor Recirculation System includes the main recirculation flowpath, which begins at the attachment points to the reactor vessel outlet nozzles, continues through the suction piping, suction valves, recirculation pump casings, discharge valves and discharge piping back to the attachment points to the inlet nozzles on the vessel. All associated piping, components and instrumentation within the flowpath described above are included in the system evaluation. Also included are the recirculation pump seals and associated piping and instrument lines up to and including the instruments outside of containment.

Included in the Reactor Recirculation System license renewal scoping boundary is the recirculation pump trip logic. The recirculation pump trip logic is an instrument-controlled function of the Redundant Reactivity Control System and the Reactor Protection System. This portion of the system supports performance of the Reactor Recirculation System intended function and is in scope for license renewal. The components of the recirculation pump trip logic are evaluated as electrical commodities.

Included in the license renewal scoping boundary of the Reactor Recirculation System are those portions of nonsafety-related piping and equipment that extend beyond the safety-related/nonsafety-related interface up to the location of the first seismic anchor, or to a point no longer in proximity to equipment performing a safety-related function, whichever extends furthest. This includes the nonsafety-related portions of the system located within the Reactor Building and Primary Containment. Included in this boundary are pressure retaining components relied upon to preserve the leakage boundary intended function of this portion of the system. For more information, refer to the License Renewal Boundary Drawings for identification of this boundary, shown in red.

Not included in the Reactor Recirculation System boundary is piping inside the reactor vessel and jet pumps that are being evaluated with the Reactor Internals. Also not included in this system boundary is the recirculation pump motor air cooler that is being evaluated with the Chilled Water System.

Not included in the scope of license renewal are the recirculation pump motor oil cooler and recirculation pump seal cooler because these coolers are physically enclosed and do not have the potential for spatial interaction with components.

Not included in the Reactor Recirculation System scoping boundary are the following interfacing systems, which are separately evaluated as license renewal systems:

Residual Heat Removal System
Reactor Water Cleanup System
Closed Cycle Cooling Water System
Chilled Water System
Equipment and Floor Drainage System
Process and Post-Accident Sampling System
Control Rod Drive System

Not included in the scope of license renewal are the recirculation motor generator sets, located in the turbine building, as this portion of the system does not perform an intended function and is not located within an area in proximity of components performing a safety-related function. Components that are not required to support the leakage boundary intended function or any other intended function are not included in the scope of license renewal.

Reason for Scope Determination

The Reactor Recirculation System meets 10 CFR 54.4(a)(1) because it is a safety related system that is relied upon to remain functional during and following design basis events. It meets 10 CFR 54.4(a)(2) because failure of nonsafety-related portions of the system could prevent satisfactory accomplishment of function(s) identified for 10 CFR 54.4(a)(1). It also meets 10 CFR 54.4(a)(3) because it is relied upon in the safety analyses and plant evaluations to perform a function that demonstrates compliance with the Commission's regulations for Fire Protection (10 CFR 50.48), Environmental Qualification (10 CFR 50.49) and Anticipated Transient Without Scram (10 CFR 50.62). Pressure boundary integrity of the Reactor Recirculation System is also relied upon in the safety analyses and plant evaluations to perform a function that demonstrates compliance with the Commission's regulation for Station Blackout (10 CFR 50.63).

The function of the motor generator set and recirculation flow control portions of the Reactor Recirculation System is to provide regulated electrical power to operate the recirculation pump motors. These portions of the system are not in scope under 10 CFR 54.4(a)(1) because they are nonsafety-related systems that are not relied upon to remain functional during and following design basis events. The motor generator set portion is not in scope under 10 CFR 54.4(a)(2) because failure of nonsafety-related portions of the system could not prevent satisfactory accomplishment of function(s) identified for 10 CFR 54.4(a)(1). The motor generator set and recirculation flow control portions are not in scope under 10 CFR 54.4(a)(3) because they are not relied upon in safety analyses and plant evaluations to perform a function that demonstrates compliance with the Commission's regulations for Fire Protection (10 CFR 50.48), Environmental Qualification (10 CFR 50.49), Anticipated Transient Without Scram (10 CFR 50.62), or Station Blackout (10 CFR 50.63).

System Intended Functions

1. Provide reactor coolant pressure boundary. The Reactor Recirculation System connects directly to the Reactor Pressure Vessel. 10 CFR 54.4(a)(1)

2. Sense process conditions and generate signals for reactor trip or engineered safety features actuations. Provides flow biasing to the neutron monitoring portion of the Reactor Protection System. 10 CFR 54.4(a)(1)

3. Provides primary containment boundary. Piping from instrument taps exit the containment and have dual automatic or one manual globe isolation valve with either excess flow check valves or swing check valves. 10 CFR 54.4(a)(1)

4. Resist nonsafety-related SSC failure that could prevent satisfactory accomplishment of a safety-related function. The Reactor Recirculation System includes nonsafety-related water filled lines in the Reactor Building that have the potential for spatial interaction (spray or leakage) with safety-related SSCs. 10 CFR 54.4(a)(2)

5. Relied upon in safety analyses or plant evaluations to perform a function that demonstrates compliance with the Commission's regulations for Fire Protection (10 CFR 50.48). The recirculation pump discharge valves must be closed to support shutdown cooling operation. 10 CFR 54.4(a)(3)

6. Relied upon in safety analyses or plant evaluations to perform a function that demonstrates compliance with the Commission's regulations for Environmental Qualification (10 CFR 50.49). The Reactor Recirculation system includes environmentally qualified electrical components. 10 CFR 54.4(a)(3)

7. Relied upon in safety analyses or plant evaluations to perform a function that demonstrates compliance with the Commission's regulations for Anticipated Transients Without Scram (10 CFR 50.62). The Recirculation Pump Trip breakers are tripped to minimize the transient. 10 CFR 54.4(a)(3)

8. Relied upon in safety analyses or plant evaluations to perform a function that demonstrates compliance with the Commission's regulations for Station Blackout (10 CFR 50.63). The Reactor Recirculation System flow instrumentation is credited in the Station Blackout analysis. 10 CFR 54.4(a)(3)

UFSAR References

1.15.1
5.1.7
5.4.1
6.2.4.1
7.6.1
7.7.1

License Renewal Boundary Drawings

LR-M-23-1, Sheet 2
LR-M-43-1, Sheet 1
LR-M-51-1, Sheet 1
LR-M-51-1, Sheet 2
LR-M-53-1, Sheet 1
LR-M-87-1, Sheet 2

Table 2.3.1-6 **Reactor Recirculation System**
Components Subject to Aging Management Review

Component Type	Intended Function
Bolting	Mechanical Closure
Bolting (Class 1)	Mechanical Closure
Class 1 Piping, Fittings and Branch Connections < NPS 4"	Pressure Boundary
Flow Device	Leakage Boundary
Heat Exchanger Components (Motor Air Cooler)	Evaluated with the Chilled Water System
Piping and Fittings	Leakage Boundary
Piping and Fittings	Pressure Boundary
Piping and Fittings (Class 1)	Pressure Boundary
Pump Casing (Class 1)	Pressure Boundary
Restricting Orifices (Class 1)	Pressure Boundary
Restricting Orifices (Class 1)	Throttle
Thermowell (Class 1)	Pressure Boundary
Valve Body	Leakage Boundary
Valve Body	Pressure Boundary
Valve Body (Class 1)	Pressure Boundary

The aging management review results for these components are provided in:

Table 3.1.2-4 Reactor Recirculation System
Summary of Aging Management Evaluation

2.3.2 ENGINEERED SAFETY FEATURES SYSTEMS

The following systems are addressed in this section:

- Automatic Depressurization System (ADS) (2.3.2.1)
- Containment Hydrogen Recombiner System (2.3.2.2)
- Core Spray System (2.3.2.3)
- Filtration, Recirculation, and Ventilation System (2.3.2.4)
- High Pressure Coolant Injection (HPCI) System (2.3.2.5)
- Hydrogen and Oxygen Analyzer System (2.3.2.6)
- Reactor Core Isolation Cooling (RCIC) System (2.3.2.7)
- Residual Heat Removal (RHR) System (2.3.2.8)
- Vacuum Relief Valve System (2.3.2.9)

2.3.2.1 Automatic Depressurization System (ADS)

System Purpose

The Automatic Depressurization System (ADS) is a standby emergency core cooling system (ECCS) designed to automatically depressurize the reactor pressure vessel (RPV) during a small break loss of coolant accident (LOCA), in the event the High Pressure Coolant Injection System is inoperable or cannot maintain water level in the RPV. The ADS also reduces RPV pressure to allow the low pressure emergency core cooling systems (Core Spray System and the low pressure coolant Injection mode of the Residual Heat Removal System) to restore reactor pressure vessel level and maintain adequate core cooling.

The purpose of the ADS is to provide automatic depressurization of the RPV in the event of a small break in the reactor coolant pressure boundary where coolant inventory cannot be maintained and reactor pressure vessel pressure remains above the design capability of the low pressure emergency core cooling systems. It accomplishes this purpose by opening of five of the fourteen nuclear pressure relief system safety relief valves to depressurize the reactor pressure vessel to the suppression pool.

Operation of ADS is credited in the 10 CFR 50 Appendix K evaluation. No single failure in the system will prevent the ADS from performing its design basis function.

System Operation

The Automatic Depressurization System (ADS) is comprised of logic relays, timers and instrumentation that receive process signal input and provide actuation signals to the five Nuclear Pressure Relief System Safety Relief Valves (SRVs). Each safety relief valve assembly consists of a main valve, a pilot valve and a solenoid operator.

The ADS automatic depressurization function and the manual operation of the SRVs are all controlled through the ADS logic network. During normal reactor operation (ADS in standby), the SRVs are closed. ADS initiation for automatic depressurization begins after sensing simultaneous occurrence of high drywell pressure, low-low-low water level in the reactor pressure vessel, and high discharge pressure from either core spray or residual heat removal pumps. There is a time delay before the SRVs open to allow for operator action to prevent ADS-initiated opening of the SRVs if appropriate.

When the ADS energizes the SRV pilot solenoids, Primary Containment Instrument Gas (PCIG) pressure is admitted to the pneumatic actuator of the SRV pilot assembly, causing the valve to open. Steam flows down the discharge header (evaluated with the Main Steam System) to the torus and exits below the surface of the water through quenchers (evaluated with the Main Steam System). The 125 VDC portion of the 24/125/250 V Station DC Power System provides the source of electrical power to the ADS relay logic and the SRV solenoids.

A valve position monitoring system allows the status of the SRVs to be ascertained from the Control Room. Accelerometers and temperature monitoring instrumentation are used to determine whether SRVs are relieving steam to the torus.

For more detailed information, see UFSAR Section 7.3.1.1.1.2.

System Boundary

The Automatic Depressurization System boundary is electrical, and is comprised of the logic relays, sensors, timers, and instrumentation that receive process signal input and provide actuation signals to the five (5) safety relief valves. The mechanical system boundary, which includes the safety relief valves, vacuum breakers, inlet and discharge piping, quenchers in the torus, and associated components are evaluated with the Main Steam System. The mechanical system boundary also includes the pneumatic piping, accumulators, solenoid valves and associated components that are evaluated with the Primary Containment Instrument Gas System.

Not included in the Automatic Depressurization System license renewal scoping boundary are the following interfacing systems, which are separately evaluated as license renewal systems:

Primary Containment Instrument Gas System
Core Spray System
Main Steam System
Residual Heat Removal System

Reason for Scope Determination

The Automatic Depressurization System meets 10 CFR 54.4(a)(1) because it is a safety-related system that is relied upon to remain functional during and following design basis events. It does not meet 10 CFR 54.4(a)(2) because failure of nonsafety-related portions of the system could not prevent satisfactory accomplishment of function(s) identified for 10 CFR 54.4(a)(1). It meets 10 CFR 54.4(a)(3) because it is relied upon in safety analyses or plant evaluations to perform a function that demonstrates compliance with the Commission's regulations for Fire Protection (10 CFR 50.48), Environmental Qualification (10 CFR 50.49), and Station Blackout (10 CFR 50.63). The Automatic Depressurization System is not relied upon in any safety analyses or plant evaluations to perform a function that demonstrates compliance with the Commission's regulation for Anticipated Transient Without Scram (10 CFR 50.62).

System Intended Functions

1. Provide emergency core cooling where the equipment provides coolant directly to the core. ADS reduces reactor coolant pressure to allow other low-pressure systems to inject into the core. 10 CFR 54.4(a)(1)

2. Sense process conditions and generate signals for reactor trip or engineered safety features actuation. ADS includes reactor water level sensors and the associated activation logic. 10 CFR 54.4(a)(1)

3. Relied upon in safety analyses or plant evaluations to perform a function that demonstrates compliance with the Commission's regulations for Fire Protection (10 CFR 50.48). Operation of the ADS associated SRVs is credited in the safe shutdown analysis. 10 CFR 54.4(a)(3)

4. Relied upon in safety analyses or plant evaluations to perform a function that demonstrates compliance with the Commission's regulations for Environmental Qualification (10 CFR 50.49). Components from the ADS system are in the EQ program. 10 CFR 54.4(a)(3)

5. Relied upon in safety analyses or plant evaluations to perform a function that demonstrates compliance with the Commission's regulations for Station Blackout (10 CFR 50.63). The ADS system valves are used to initiate cooldown during shutdown and system instrumentation is used to monitor plant conditions during coping. 10 CFR 54.4(a)(3)

UFSAR References

7.3.1.1.1.2
6.3

License Renewal Boundary Drawings

Not Required

Table 2.3.2-1 Automatic Depressurization System (ADS) Components Subject to Aging Management Review

Component Type	Intended Function
No Mechanical Components	Not Applicable

Aging management review results are not applicable for this system.

2.3.2.2 Containment Hydrogen Recombiner System

System Purpose

The Containment Hydrogen Recombiner System is a license renewal system designed to control hydrogen and oxygen concentrations in the Primary Containment postulated to be generated following a beyond design basis accident. Buildup of hydrogen and oxygen concentrations could result in hydrogen burns and/or hydrogen detonations that could jeopardize primary containment integrity. The Containment Hydrogen Recombiner System accomplishes this purpose by processing the drywell gas and recombining available oxygen with available hydrogen by thermal recombination. The Containment Hydrogen Recombiner System is part of the containment atmosphere control plant system.

The Containment Hydrogen Recombiner System is a manually initiated safety-related system that will automatically isolate on a containment isolation signal. The isolation signal can be overridden to re-open the isolation valves.

System Operation

The Containment Hydrogen Recombiner System is comprised of two separate and redundant trains, each capable of recombining hydrogen and oxygen at a rate in excess of their expected post loss-of-coolant-accident production. Each containment hydrogen recombiner train has a blower assembly, which provides the motive force to transport the drywell atmosphere to the recombiner reaction chamber for processing and then provides a return flow path to the torus. The main heater in each containment hydrogen recombiner train is used to raise the operating temperature to the reaction temperature required to allow spontaneous recombination of hydrogen and oxygen. During operation of the Containment Hydrogen Recombiner System, the drywell pressure would lower and the torus pressure would increase due to taking suction from the drywell and providing a return flowpath to the torus. The torus to drywell vacuum breakers of the Vacuum Relief Valve System limit the differential pressure increase. Exhaust gases are cooled by the mixing of these gases with a water spray in the throat region of a venturi. The mixing water spray is provided by the Residual Heat Removal System. The hot exhaust gases from the main heaters are cooled while the mixing water spray absorbs enough heat to produce water vapor. The exhaust gases, and newly formed water vapor are directed to the water separator. The recirculation line is taken off the top of the water separator to ensure mostly dry gases are returned to the blower suction or torus. The remaining exhaust gases and water vapor for each hydrogen recombiner train are discharged through a sloped piping line, through two automatic containment isolation valves, and return to the torus through two piping attachment points. The train "A" hydrogen recombiner return goes to an attachment point on the containment prepurge cleanup system supply line to the torus. The train "B" hydrogen recombiner return goes to an attachment point on the containment prepurge cleanup system return line from the torus.

The power source for each containment hydrogen recombiner skid and the containment hydrogen recombiner containment isolation valves is from the 480 V Auxiliary System. The power source for the heaters is from the 120 VAC Vital Power System.

The containment isolation valves within the Containment Hydrogen Recombiner System, as well as the Residual Heat Removal System water supply isolation valves automatically close upon receiving an isolation signal from the Primary Containment Isolation System. Signals

that generate valve isolations are: high containment pressure, low-low reactor water level, and reactor building high radiation. These isolating signals can be overridden to allow reestablishing the hydrogen recombining process.

The Containment Hydrogen Recombiner System is started and removed from service manually.

For more detailed information, see UFSAR Section 6.2.5.2.4.

System Boundary

The Containment Hydrogen Recombiner System boundary begins at an attachment point to the containment prepurge cleanup system drywell supply and return lines. The Containment Hydrogen Recombiner System has two separate trains. The train "A" of the containment hydrogen recombiner supply line tees off at an attachment point upstream of the containment prepurge cleanup system return line inboard isolation valve, at the top region of the drywell. The train "B" of the containment hydrogen recombiner system supply line tees off at an attachment point downstream of the containment prepurge cleanup system supply line inboard isolation valve, at mid elevation of the drywell. The system boundary from each drywell suction point continues through two in-series containment isolation valves to each hydrogen recombiner skid, which includes a motor operated valve, blower, spiral/coiled heater pipe, reaction chamber, spray cooler, eductor and water separator. The system boundary continues from each hydrogen recombiner skid through two independent containment isolation valves and the boundary terminates through an attachment point on the containment prepurge cleanup system supply and return paths to and from the torus, respectively. The attachment point from train "A" to the containment prepurge cleanup system supply line to the torus is downstream of the two containment isolation valves. The attachment point from the train "B" return to the containment prepurge cleanup system return line from the torus is upstream of the two containment isolation valves.

In addition the system boundary includes the portion of the cooling water piping from the Residual Heat Removal System attachment point to the containment hydrogen recombiner system spray coolers.

All associated piping, components, and instrumentation contained within the flow path described above are included in the Containment Hydrogen Recombiner System boundary.

Not included in the Containment Hydrogen Recombiner System scoping boundaries are the following interfacing systems, which are separately evaluated as license renewal systems:

Containment Inerting and Purging System
Reactor Building Ventilation System
Residual Heat Removal System

Reason for Scope Determination

The Containment Hydrogen Recombiner System meets 10 CFR 54.4(a)(1) because it is a safety-related system that is relied upon to remain functional during and following design basis events. The Containment Hydrogen Recombiner System is not in scope under 10 CFR 54.4(a)(2) because failure of nonsafety-related portions of the system would not prevent satisfactory accomplishment of function(s) identified for 10 CFR 54.4(a)(1). The Containment

Hydrogen Recombiner System meets 10 CFR 54.4(a)(3) because it is relied upon in safety analyses or plant evaluations to perform a function that demonstrates compliance with the Commission's regulations for Environmental Qualification (10 CFR 50.49). The Containment Hydrogen Recombiner System is not relied upon in any safety analyses or plant evaluations to perform a function that demonstrates compliance with the Commission's regulation for Fire Protection (10 CFR 50.48), Anticipated Transient Without Scram (10 CFR 50.62), or Station Blackout (10 CFR 50.63).

System Intended Functions

1. Provide primary containment boundary. The Containment Hydrogen Recombiner System includes primary containment isolation valves that close on high drywell pressure, low-low reactor water level, and Reactor Building exhaust high radiation. 10 CFR 54.4(a)(1)

2. Control combustible gas mixtures in the primary containment atmosphere. The Containment Hydrogen Recombiner System is used to control and reduce hydrogen and oxygen concentrations under post Loss-of-Coolant-Accident conditions. 10 CFR 54.4 (a)(1)

3. Relied upon in safety analyses or plant evaluations to perform a function that demonstrates compliance with the Commission's regulations for Environmental Qualification (10 CFR 50.49). The limit switches associated with the Primary Containment isolation valves within the Containment Hydrogen Recombiner System are Environmentally Qualified. 10 CFR 54.4(a)(3)

UFSAR References

6.2.5
7.3.1.1.6

License Renewal Boundary Drawings

LR-M-57-1, Sheet 1
LR-M-58-1, Sheet 1

Table 2.3.2-2 Containment Hydrogen Recombiner System Components Subject to Aging Management Review

Component Type	Intended Function
Bolting	Mechanical Closure
Eductor	Pressure Boundary
Fan Housing	Pressure Boundary
Flow Element	Pressure Boundary
Piping and Fittings	Pressure Boundary
Spray Nozzles	Pressure Boundary
Spray Nozzles	Spray
Strainer Body	Pressure Boundary
Tanks (Reaction Chamber)	Pressure Boundary
Tanks (Water Separator)	Pressure Boundary
Thermowell	Pressure Boundary
Valve Body	Pressure Boundary

The aging management review results for these components are provided in:

Table 3.2.2-1 Containment Hydrogen Recombiner System Summary of Aging Management Evaluation

2.3.2.3 Core Spray System

System Purpose

The Core Spray System is a standby low pressure emergency core cooling system designed to provide cooling water for removal of decay heat from the reactor core following a postulated Loss-of-Coolant Accident (LOCA). Large-to-intermediate pipe breaks in the reactor coolant system result in a reactor pressure reduction sufficient to permit the Core Spray System to achieve its rated injection flow to limit fuel clad maximum temperature. To accommodate the remaining intermediate-to-small pipe breaks the Core Spray System also functions, in conjunction with the Automatic Depressurization System, to limit fuel clad temperature during a LOCA when the reactor vessel is not rapidly depressurized and the High Pressure Coolant Injection System, Reactor Core Isolation Cooling System, Feedwater System or Control Rod Drive System cannot adequately cool the reactor core. In this manner, the Core Spray System provides core cooling such that the maximum allowable fuel clad temperature limit is not reached for the entire spectrum of postulated LOCAs. The Core Spray System provides a supply of cooling water to the reactor core that is independent of the High Pressure Coolant Injection System, Reactor Core Isolation Cooling System, Feedwater System or Control Rod Drive System and the Core Spray System can be operated on emergency power.

The purpose of the Core Spray System is to provide for the post-LOCA removal of decay heat from the reactor core so that fuel clad temperature limits are maintained for the entire spectrum of postulated LOCAs. The Core Spray System accomplishes this purpose by delivering a low-pressure spray pattern over the fuel following a LOCA, which limits peak clad temperature. The Core Spray System operation is initiated automatically by either reactor low water level or high drywell pressure, or can be initiated manually.

The Core Spray System is a two-loop system. No single failure in the Core Spray System can cause both loops to malfunction. Operation of the Core Spray System loops is credited in the 10 CFR 50 Appendix K evaluation.

System Operation

The Core Spray System is comprised of two independent cooling loops, each providing 100 percent capacity. Each loop consists of two centrifugal pumps, each with a suction header from the torus that contains one suction isolation valve, a common discharge header, two motor operated isolation valves, one air operated check valve, a spray sparger in the reactor vessel just above the core, associated piping, valves, instrumentation and controls. The core spray pumps suction is through strainers located in the torus. The discharge is through the system isolation valves into spray spargers (evaluated with Reactor Internals). Each Core Spray System loop contains full flow test, minimum flow pump protection features, and a discharge header over-pressure protection relief valve. Flow and pressure instrumentation are provided in the control room for each loop. All motor operated valves in the main flowpath of each loop are normally open during system standby, with the exception of a downstream motor isolation valve in the discharge header located outside the drywell. The core spray system piping and components in the pressure boundary are considered an extension of the primary containment boundary.

During normal plant operation, the Core Spray System is in a ready standby condition. In this mode the Residual Heat Removal System's jockey pump runs continuously to maintain the core spray pump discharge line filled with water.

Upon receipt of the initiation signal, all core spray pumps in each Core Spray System loop start. Initiation of both loops of the Core Spray System occurs upon receipt of a high drywell pressure or low reactor vessel level signal. These signals also start standby diesel generators, in order to supply power to the core spray pumps in the event of loss of normal electric power supply. The Core Spray System can also be initiated manually. Once the reactor pressure drops below a preset value and the Core Spray System actuation signal is present, the motor operated isolation valves in the discharge headers receive a permissive signal to open. Opening of the motor operated isolation valves in the discharge headers completes the flowpath, and injection water from the two loops enters the vessel through two penetrations. The two core spray headers (evaluated with Reactor Internals) enter the Reactor Pressure Vessel through penetration nozzles inside the reactor vessel. Each core spray header internal pipe (also evaluated with Reactor Internals) then divides into a semicircular header with a downcomer at each end which turns through the core shroud near the top. A semicircular sparger is attached to each of the four outlets to make two nearly complete circles, one above the other. Short, elbow nozzles are spaced around the spargers to spray the water radially onto the tops of the fuel assemblies.

The main flow path for each Core Spray System loop takes suction from the torus through two core spray pumps, continuing through the two outboard motor isolation valves, through the inboard air operated stop check valve, and into the reactor vessel for discharge onto the core through the associated spray sparger.

After Core Spray System flow has been established into the vessel, the torus provides an essentially unlimited supply of cooling water. Water discharged from a pipe break inside the drywell will overflow through the drywell vents into the torus. An alternate supply of cooling water for the Core Spray System is the condensate storage tank through closed manual valves located at the suction of each core spray pump. The condensate storage tank is evaluated with the Condensate Storage and Transfer System. During Core Spray System operation, the heat being absorbed by the water that flows back to the torus is transferred to the ultimate heat sink by the heat exchangers in the Residual Heat Removal System.

The equipment area cooling system, which is part of the Reactor Building Ventilation System, is an engineered safeguard ventilation system that provides standby supplementary cooling to the each Core Spray pump room. Each Core Spray System pump room is provided with two coolers sized to extract the heat generated by pump operation. Cooling water supplied to these coolers from the safety and turbine auxiliary cooling system and is evaluated with the Closed Cycle Cooling Water System. Air flow path for these coolers is evaluated with the Reactor Building Ventilation System. Operation of these coolers is required to support the Core Spray System safety-related function.

For more detailed information, see UFSAR Sections 6.3.2 and 6.3.2.2.3.

System Boundary

The Core Spray System scoping boundary begins with the strainers in the torus and includes the Core Spray pumps that take suction through individual suction headers from each strainer, continuing through the suction isolation valves, through the pump to the discharge piping into

two common headers each containing two outboard motor operated isolation valves outside of containment, continues through the inboard air operated stop check valve inside containment, and terminates where each core spray loop spray sparger is attached to the reactor vessel nozzle. Included in this boundary is a full flow test line on each loop and pressure relief valve line on each common discharge header that goes back to the torus. All associated piping, components, and instrumentation contained within the flowpath discussed above are included in the system boundary.

Included in the license renewal boundary of the Core Spray System are those portions of nonsafety-related piping and equipment that extend beyond the safety-related/nonsafety-related interface up to the location of the first seismic anchor, or to a point no longer in proximity to equipment performing a safety-related function, whichever extends furthest. This includes the nonsafety-related portions of the system located within the Reactor Building. Included in this boundary are pressure retaining components relied upon to preserve the leakage boundary intended function of this portion of the system. For more information, refer to the license renewal boundary drawing for identification of this boundary, shown in red.

Not included are the piping and spargers located inside the reactor vessel, which are included in the Reactor Internals scoping boundary.

Not included in the Core Spray System license renewal scoping boundary are the following interfacing systems, which are separately evaluated as license renewal systems:

Automatic Depressurization System
Residual Heat Removal System
High Pressure Coolant Injection System
Primary Containment Instrument Gas System
Primary Containment
Condensate Storage and Transfer System
Reactor Internals
Reactor Pressure Vessel

Reason for Scope Determination

The Core Spray System meets the scoping requirements of 10 CFR 54.4(a)(1) because it is a safety-related system which is relied upon to remain functional during and following design basis events. It meets 10 CFR 54.4(a)(2) because failure of nonsafety-related portions of the system could prevent satisfactory accomplishment of function(s) identified for 10 CFR 54.4(a)(1). It does meet 10 CFR 54.4(a)(3) because it is relied upon in the safety analyses or plant evaluations to perform a function that demonstrates compliance with the Commission's regulations for Fire Protection (10 CFR 50.48), Environmental Qualification (10 CFR 50.49), Anticipated Transient Without Scram (10 CFR 50.62) and Station Blackout (10 CFR 50.63).

System Intended Functions

1. Provide reactor coolant pressure boundary. The Core Spray System provides isolation from the reactor coolant pressure boundary. 10 CFR 54.4(a)(1)

2. Sense process conditions and generate signals for reactor trip or engineered safety features actuation. The Core Spray System includes the associated actuation logic. 10 CFR 54.4(a)(1)

3. Provide emergency core cooling where the equipment provides coolant directly to the core. The Core Spray System provides the emergency core cooling system function to limit peak clad temperatures below 2200 deg F, maintain local oxidization of clad to a thickness not exceeding seventeen percent of unoxidized clad, limit hydrogen generation from the metal-water reaction to not greater than one percent of the calculated value for the total metal-water reaction hydrogen generation, maintain a coolable geometry, and provide long term cooling. Minimum flow capability provides pump protection to assure capability of emergency core cooling system function. Core Spray System operates with Automatic Depressurization System to accommodate entire spectrum of postulated LOCA breaks. 10 CFR 54.4(a)(1)

4. Provide primary containment boundary. The Core Spray System injection piping contains valves, which are considered containment isolation devices. 10 CFR 54.4(a)(1)

5. Resist nonsafety-related system, stucture or component failure that could prevent satisfactory accomplishment of a safety-related function. The Core Spray System includes nonsafety-related water filled lines in the Reactor Building that have the potential for spatial interactions (spray or leakage) with safety-related system, stucture or components. 10 CFR 54.4(a)(2)

6. Relied upon in safety analyses or plant evaluations to perform a function that demonstrates compliance with the Commission's regulations for Fire Protection (10 CFR 50.48). Core Spray System is part of Appendix R shut down method. 10 CFR 54.4(a)(3)

7. Relied upon in safety analyses or plant evaluations to perform a function that demonstrates compliance with the Commission's regulations for Environmental Qualification (10 CFR 50.49). Core Spray System has components that are in the Environmental Qualification program. 10 CFR 54.4(a)(3)

8. Relied upon in safety analyses or plant evaluations to perform a function that demonstrates compliance with the Commission's regulations for Anticipated Transients Without Scram (10 CFR 50.62). Core Spray System provides a flow path for Standby Liquid Control System injection. 10 CFR 54.4(a)(3)

9. Relied upon in safety analyses or plant evaluations to perform a function that demonstrates compliance with the Commission's regulations for Station Blackout (10 CFR 50.63). Core Spray System lines provide a flow path for High Pressure Coolant Injection System. 10 CFR 54.4(a)(3)

<u>UFSAR References</u>

6.3.2
6.3.2.2.3

<u>License Renewal Boundary Drawings</u>

LR-M-41-1, Sheet 1
LR-M-52-1, Sheet 1
LR-M-55-1, Sheet 1

Table 2.3.2-3 Core Spray System
Components Subject to Aging Management Review

Component Type	Intended Function
Bolting	Mechanical Closure
Bolting (Class 1)	Mechanical Closure
Class 1 Piping, Fittings and Branch Connections < NPS 4"	Pressure Boundary
Cyclone Separator (on Core Spray pump)	Pressure Boundary
Flow Element	Pressure Boundary
Piping and Fittings	Leakage Boundary
Piping and Fittings	Pressure Boundary
Piping and Fittings (Class 1)	Pressure Boundary
Pump Casing (Core Spray)	Pressure Boundary
Restricting Orifices	Pressure Boundary
Restricting Orifices	Throttle
Restricting Orifices (Class 1)	Pressure Boundary
Restricting Orifices (Class 1)	Throttle
Strainer	Filter
Strainer	Pressure Boundary
Valve Body	Leakage Boundary
Valve Body	Pressure Boundary
Valve Body (Class 1)	Pressure Boundary

The aging management review results for these components are provided in:

Table 3.2.2-2 Core Spray System
Summary of Aging Management Evaluation

2.3.2.4 Filtration, Recirculation, and Ventilation System

System Purpose

The Filtration, Recirculation & Ventilation System (FRVS) is a plant engineered safety feature (ESF) ventilation system that recirculates, filters and exhausts the air in the Reactor Building following a loss of coolant accident (LOCA), or other high radioactivity accident, to reduce the concentration of radioactive halogens and particulates.

The Filtration, Recirculation, and Ventilation System consists of two subsystems, the recirculation system and the ventilation system, that are required to perform post-accident, safety-related functions simultaneously. The recirculation system, located inside the Reactor Building, is designed to recirculate and filter the air in the Reactor Building following a LOCA, or other high radioactivity accident, to reduce the reduces offsite doses significantly below 10 CFR 100 guidelines. Upon Reactor Building isolation, the recirculation system is actuated and recirculates the Reactor Building air through filters for cleanup. This is the initial cleanup system before discharge is made via the ventilation system. The ventilation system, also located inside the Reactor Building, maintains the building at a negative pressure with respect to the outdoors. The system takes suction from the discharge duct of the recirculation system and discharges the air through filters to the outdoors via a vent at the top of the Reactor Building.

During normal operation, the Reactor Building Ventilation System is operating and the FRVS is in standby. During a postulated accident or abnormal occurrence, the FRVS is automatically actuated. The FRVS can also be started manually from the main control room. The FRVS is supplied with diesel generator power automatically during a LOCA coincident with loss of offsite power (LOP).

System Operation

The recirculation system consists of six 25 percent capacity recirculation fans and filter trains connected to ducts, controls, and instrumentation. It is connected in parallel with the Reactor Building Ventilation System (RBVS), to the extensive supply and exhaust duct network within the Reactor Building. All six FRVS recirculation units include fan inlet vanes and isolation dampers, moisture separators to recirculate the Reactor Building air, electric heating coils, high efficiency particulate air (HEPA) filters, charcoal filters, HEPA afterfilters, and water cooling coils. Upon a LOCA signal, all six FRVS recirculation units start and handle the total building free volume at three percent per minute. There are two designed standby units that are manually stopped and re-aligned to "Auto" mode. The standby units start automatically upon loss of flow of any one of the four operating units. Four of the six FRVS recirculation units recirculate the Reactor Building air for at least 10 minutes after a LOCA signal. Cooling provided by the four operating FRVS recirculation units limit the expansion and temperature of the Reactor Building air following a LOCA.

Upon receipt of a FRVS recirculation fan start signal, the associated fan's air supply and exhaust dampers automatically open, in addition the fan's inlet vane automatically operates to maintain the required flow through the filter units. The safety auxiliaries cooling plant system (SACS) cooling water valve to the unit's cooling coils automatically opens to provide cooling. The cooling coils are provided with water from SACS, which is evaluated with the Closed Cycle Cooling Water System. One of the two SACS cooling water loops supplies water to the

three cooling coils while the redundant loop supplies the three remaining coils. The arrangement ensures that even with one of the SACS cooling water loop failure, three FRVS recirculating cooling coils will continue to function.

The ventilation system consists of two 100 percent capacity centrifugal fans, filter trains, ducts, controls, and instrumentation. Each fan is provided with inlet vanes and isolation dampers. One ventilation unit runs while the other is on standby. Each ventilation unit takes the discharge from the FRVS recirculation system and processes the air through a charcoal filter and HEPA filter. It exhausts to the outdoors through a vent located at the top of the Reactor Building to maintain a negative pressure relative to the atmosphere greater or equal to 0.25 inches of water column. The exhaust is monitored for radioactivity before release to the environment.

The ventilation system automatically starts upon receipt of a reactor isolation signal. Upon receipt of a start signal, the associated fan's air supply and exhaust dampers automatically open, in addition the fan's inlet vane automatically operates to maintain the required air flow through the filter unit. The unit's heater is automatically energized. The air exhaust dampers and air bypass dampers automatically control air flow to either the environment or back to the FRVS recirculation system. The air exhaust and bypass dampers operate to maintain the Reactor Building at a negative 0.25 inches of water column.

For more detailed information, see UFSAR Section 6.8.

System Boundary

The Filtration, Recirculation & Ventilation System (FRVS) boundary begins at the main exhaust header of the Reactor Building Ventilation System where it is drawn into the FRVS recirculation system. It continues through the recirculation fans and filter trains to the FRVS ventilation system, continuing through the ventilation fan, ventilation filter and associated ductwork. The boundary ends at the vent located at the top of the reactor building or can be re-circulated back to the FRVS recirculation system via air exhaust dampers or air bypass dampers.

Not included in the Filter, Recirculation and Ventilation System license renewal scoping boundary are the following interfacing systems, which are separately evaluated as license renewal systems:

Closed Cycle Cooling Water System
Reactor Building Ventilation System

Reason for Scope Determination

The Filtration, Recirculation & Ventilation System meets 10 CFR 54.4(a)(1) because it is a safety-related system that is relied upon to remain functional during and following design basis events. It does not meet 10 CFR 54.4(a)(2) because failure of nonsafety-related portions of the system would not prevent satisfactory accomplishment of function(s) identified for 10 CFR 54.4(a)(1). It also meets 10 CFR 54.4(a)(3) because it is relied upon in the safety analyses or plant evaluations to perform a function that demonstrates compliance with the Commission's regulations for Environmental Qualification (10 CFR 50.49) and Station Blackout (10 CFR 50.63). The Filtration, Recirculation & Ventilation System is not relied upon in any safety analyses or plant evaluations to perform a function that demonstrates compliance with the

Commission's regulation for Fire Protection (10 CFR 50.48) and Anticipated Transient Without Scram (10 CFR 50.62).

System Intended Functions

1. Provide secondary containment boundary. Provides for controlled, elevated release of filtered building atmosphere under accident conditions. 10 CFR 54.4(a)(1)

2. Control and treat radioactive materials released to the secondary containment. Minimize ground level release of airborne radioactive materials by maintaining a negative pressure in the Reactor Building. 10 CFR 54.4(a)(1)

3. Relied upon in safety analyses or plant evaluations to perform a function that demonstrates compliance with the Commission's regulations for Environmental Qualification (10 CFR 50.49). The Filtration, Recirculation, and Ventilation System includes environmentally qualified components. 10 CFR 54.4(a)(3)

4. Relied upon in safety analyses or plant evaluations to perform a function that demonstrates compliance with the Commission's regulations for Station Blackout (10 CFR 50.63). The Filtration, Recirculation, and Ventilation System is designed to satisfy its designed safety function on loss of power. 10 CFR 54.4(a)(3)

UFSAR References

6.8

License Renewal Boundary Drawings

LR-M-76-1, Sheet 1
LR-M-83-1, Sheet 1
LR-M-84-1, Sheet 1

Table 2.3.2-4 Filtration, Recirculation, and Ventilation System Components Subject to Aging Management Review

Component Type	Intended Function
Bird Screen	Filter
Bolting	Mechanical Closure
Damper Housing	Pressure Boundary
Door Seal	Pressure Boundary
Ducting and Components	Pressure Boundary
Fan Housing	Pressure Boundary
Filter Housing	Pressure Boundary
Flexible Connection	Pressure Boundary
Flow Element	Pressure Boundary
Heat Exchanger Components (FRVS Recirc cooling coils)	Evaluated with the Closed Cycle Cooling Water System
Piping and Fittings	Pressure Boundary
Tanks (Drum Trap)	Pressure Boundary
Thermowell	Pressure Boundary
Valve Body	Pressure Boundary

The aging management review results for these components are provided in:

Table 3.2.2-3 Filtration, Recirculation, and Ventilation System Summary of Aging Management Evaluation

2.3.2.5 High Pressure Coolant Injection (HPCI) System

System Purpose

The High Pressure Coolant Injection (HPCI) System is a standby high pressure Emergency Core Cooling System (ECCS) designed to ensure that the reactor core is not uncovered if there is a small break in the reactor coolant pressure boundary that does not result in rapid depressurization of the reactor vessel. This permits the plant to be safely shut down, by maintaining sufficient reactor vessel water inventory while the reactor vessel is depressurized. The HPCI System continues to operate until the reactor vessel is depressurized to the point at which low pressure coolant injection and/or core spray system operation can maintain core cooling. The HPCI System also fulfills the objectives of the Reactor Core Isolation Cooling (RCIC) System, in the event RCIC becomes isolated or otherwise inoperative. The HPCI System provides a supply of cooling water to the reactor core, which maintains the reactor vessel water level above the top of the core and prevents Automatic Depressurization System actuation. The HPCI System supplies make-up water to the reactor vessel through one of the core spray spargers and one of the feedwater headers. HPCI can be operated on DC emergency power without the need for AC emergency power.

The HPCI System consists of the following plant systems: High Pressure Coolant Injection System and the High Pressure Coolant Injection Turbine Steam System. The HPCI System is in scope for License Renewal. However, portions of the HPCI System are not required to perform intended functions and are not in scope. The HPCI System has several interfaces with other systems that are not in the license renewal boundary of the HPCI System.

The primary purpose of the HPCI System is to provide sufficient coolant to the reactor vessel to prevent excessive fuel clad temperatures in the event of a small break LOCA that does not result in rapid depressurization of the reactor vessel. The HPCI System accomplishes this purpose by delivering sufficient high pressure flow to maintain reactor vessel inventory and ensures that the reactor core is not uncovered. The HPCI System operation is initiated automatically by either reactor low-low water level or high drywell pressure, or can be initiated manually.

The HPCI System is a single loop system that is not single failure proof. Operation of the HPCI System is credited in the 10 CFR 50 Appendix K evaluation.

System Operation

The High Pressure Coolant Injection (HPCI) System consists of a steam turbine driven HPCI pump assembly and associated system piping, valves, controls, and instrumentation. The HPCI pump assembly consists of a single stage booster pump and a double stage main pump. Both pumps are mounted on a common skid and connected in series in the system flow path. The booster pump is driven through a reduction gear mechanism by the HPCI turbine that drives the HPCI pump.

The HPCI booster pump takes suction from either the condensate storage tank or the suppression pool, through the suppression pool strainer, and discharges to the suction of the HPCI pump. The HPCI pump discharges to the reactor pressure vessel through the core spray sparger connected to core spray pumps A and C. The HPCI pump also discharges to the reactor pressure vessel through feedwater line "A" header. A minimum flow bypass

system is provided to protect the pump while operating against a closed discharge valve. This minimum flow bypass directs the HPCI pump discharge to the suppression pool.

During normal plant operation, the HPCI System is in a ready 'standby' condition. In this mode the HPCI jockey pump runs continuously to maintain the HPCI pump discharge line filled with water. The Condensate Storage and Transfer System supplies demineralized water for filling of the HPCI System and can also be used to maintain HPCI pump discharge piping full if the jockey pump is out of service. Additionally, the turbine steam supply line is kept warm by admitting reactor steam up to the HPCI turbine steam supply shutoff valve. Condensate is drained to the main condenser through a drain pot and steam trap.

Initiation of the HPCI System occurs upon receipt of a high drywell pressure or low-low reactor water level signal. The HPCI System can also be manually initiated. Once the HPCI System actuation signal is present, the vacuum pump starts and the auxiliary oil pump starts to open the HPCI turbine stop valve, which delivers steam to the HPCI turbine driving the HPCI pump assembly. In addition, the actuation signal also provides a permissive signal to open the following motor operated valves: turbine steam supply valve, turbine control valve, condensate storage tank suction valve, HPCI pump discharge valve, HPCI pump discharge valve to Core Spray header, HPCI pump discharge valve to feedwater header, barometric condenser/lube oil cooler cooling water supply valve and the HPCI minimum flow valve. Additionally, the HPCI test return valve to the condensate storage tank, HPCI/RCIC test return valve to the condensate storage tank, and the vacuum pump discharge valve to the main condenser all close upon receipt of an initiation signal.

The HPCI System main flow path initially takes suction from the condensate storage tank. If the water level in the condensate storage tank falls below a predetermined level or the suppression pool water level is high, the pump suction is automatically transferred to the suppression pool. This transfer may also be made from the main control room using manual controls. When the pump suction has been transferred to the suppression pool, a closed loop is established for recirculation of water escaping from a break in the reactor coolant pressure boundary following a postulated LOCA.

The heat being absorbed by the water in the torus is transferred to the ultimate heat sink by the heat exchangers in the Residual Heat Removal System and the Closed Cycle Cooling Water System. After the HPCI System flow has been established into the vessel, the suppression pool provides an essentially unlimited supply of cooling water.

The HPCI turbine is driven by steam from the reactor vessel generated by decay and residual heat. The steam is extracted from main steam line "C" upstream of the main steam isolation valves. The inboard and outboard HPCI containment isolation valves in the steam line to the HPCI turbine are normally open. This keeps the piping to the turbine at an elevated temperature to permit rapid startup of the HPCI System. The inboard isolation valve has a bypass line containing a normally closed valve. This bypass line permits pressure equalization and drainage around the isolation valve and downstream line warm-up prior to opening of the isolation valve.

A condensate drain pot is provided upstream of the HPCI turbine steam supply shutoff valve to prevent this line from filling with water. The drain pot normally routes the condensate to the main condenser. However, upon receipt of an HPCI System initiation signal, or upon loss of control air pressure, isolation valves on the condensate line automatically close to prevent loss of steam.

Exhaust steam from the HPCI turbine is discharged below the surface of the suppression pool. Condensate from the turbine exhaust line and from the turbine casing, ring, seat and chest drains is collected in the turbine exhaust drain pot. The collected condensate is discharged through an orifice to the HPCI barometric condenser. Steam from the HPCI turbine gland seals is vented to and condensed in the barometric condenser. The HPCI gland seal condenser vacuum pump maintains the barometric condenser under vacuum conditions and removes non-condensable gases, which are normally pumped to the Filtration, Recirculation, and Ventilation System. During HPCI System testing, the non-condensable gases can be routed to the main condenser. The barometric condenser, gland seal condenser vacuum pump and associated piping and valves prevent contaminated steam from leaking into the HPCI room atmosphere during turbine operation, and are not required to support HPCI System operation. The gland seal condenser vacuum pump and associated piping and valves contain non-condensable gasses and are not required to support any intended functions. Therefore, the gland seal condenser vacuum pump and associated piping and valves are not in scope for license renewal.

A full-flow test line is provided to permit transfer of condensate water from and to the condensate storage tank for testing of the HPCI System during normal plant operation.

The HPCI System is provided with pump room coolers to extract the heat generated by pump and turbine operation. Cooling water supplied to these coolers is evaluated with the Closed Cycle Cooling Water System. The airflow path for these coolers is evaluated with the Reactor Building Ventilation System. Operation of these coolers is required to support the HPCI System safety-related function.

For more detailed information, see UFSAR Section 6.3.

System Boundary

The HPCI System boundary for water injection begins with the HPCI suction lines from the condensate storage tank and the suppression pool strainer. It continues through to the HPCI booster pump and HPCI main pump. The discharge path runs from the output side of the HPCI main pump to the Core Spray System Train "A" sparger and the Feedwater System "A" line connections outside the primary containment. Included are all piping and components that feed the HPCI booster pump and the HPCI main pump. The discharge path also includes a minimum flow line to the torus and a flow test return line to the condensate storage tank.

Also included in the HPCI System boundary is the keep fill jockey pump that takes suction from the condensate storage tank and discharges to the HPCI supply header.

The HPCI boundary for the steam supply begins with the HPCI steam supply attachment piping at the "C" main steam line and continues through the inboard and outboard HPCI containment isolation valves, HPCI steam admission stop and control valves, continues through the HPCI turbine, and the HPCI turbine exhausts to the torus. Auxiliary subsystems include gland seal, drain pots, turbine oil, and turbine cooling water.

All associated piping, components and instrumentation, contained within flow paths and subsystems described above are included in the HPCI System evaluation boundary.

Also included in the HPCI System boundary is the suppression pool level instrumentation and the condensate storage tank level instrumentation necessary to provide signals to initiate the automatic swap of the HPCI suction source from the condensate storage tank to the suppression pool.

Included in the license renewal boundary of the HPCI System are those portions of nonsafety-related piping and equipment that extend beyond the safety-related/nonsafety-related interface up to the location of the first seismic anchor, or to a point no longer in proximity to equipment performing a safety-related function, whichever extends furthest. This includes the nonsafety-related portions of the system located within the Reactor Building. Included in the boundary are pressure retaining components located in the Reactor Building relied upon to preserve the leakage boundary intended function of the system. For more information, refer to the license renewal boundary drawing for identification of this boundary, shown in red.

Not included in the scope of license renewal are the piping and components associated with the HPCI gland seal condenser vacuum pump. This includes the suction piping from the barometric condenser vacuum tank through the HPCI gland seal condenser vacuum pump to the reactor building exhaust and main condenser, including the recirculation piping from the vacuum pump back to the vacuum tank. This portion of the system is not safety-related and is not required to function to support operability of the HPCI System. In addition, since this portion of the system contains gas it does not support the system's leakage boundary intended function. Therefore, this portion of the HPCI System is not required to perform an intended function and is not included in the scope of license renewal.

Not included in the HPCI license renewal scoping boundary are the following interfacing systems, which are separately evaluated as license renewal systems:

Condensate Storage and Transfer System
Core Spray System
Feedwater System
Main Steam System
Primary Containment

Reason for Scope Determination

The High Pressure Coolant Injection System meets 10 CFR 54.4(a)(1) because it is a safety-related system that is relied upon to remain functional during and following design basis events. It meets 10 CFR 54.4(a)(2) because failure of nonsafety-related portions of the system could prevent satisfactory accomplishment of function(s) identified for 10 CFR 54.4(a)(1). It also meets 10 CFR 54.4(a)(3) because it is relied upon in the safety analyses or plant evaluations to perform a function that demonstrates compliance with the Commission's regulations for Fire Protection (10 CFR 50.48), Environmental Qualification (10 CFR 50.49), and Station Blackout (10 CFR 50.63). The High Pressure Coolant Injection System is not relied upon in any safety analyses or plant evaluations to perform a function that demonstrates compliance with the Commission's regulation for Anticipated Transient Without Scram (10 CFR 50.62).

System Intended Functions

1. Provide reactor coolant pressure boundary. The High Pressure Coolant Injection System steam supply includes reactor coolant pressure boundary piping. 10 CFR 54.4(a)(1)

2. Provide emergency core cooling where the equipment provides coolant directly to the core. The High Pressure Coolant Injection System provides high pressure coolant flow to the reactor vessel. 10 CFR 54.4(a)(1)

3. Provide primary containment boundary. The High Pressure Coolant Injection System includes piping and valves that are part of the primary containment boundary. 10 CFR 54.4(a)(1)

4. Sense process conditions and generate signals for reactor trip or engineered safety features actuation. The High Pressure Coolant Injection System includes suppression pool and condensate storage tank level instrumentation to perform automatic swap of the High Pressure Coolant Injection system suction source from the condensate storage tank to the suppression pool. 10 CFR 54.4(a)(1)

5. Resist nonsafety-related SSC failure that could prevent satisfactory accomplishment of a safety-related function. The High Pressure Coolant Injection System includes nonsafety-related water filled lines in the Reactor Building that have the potential for spatial interactions (spray or leakage) or structurally interact with safety-related SSCs. 10 CFR 54.4(a)(2)

6. Relied upon in safety analyses or plant evaluations to perform a function that demonstrates compliance with the Commission's regulations for Fire Protection (10 CFR 50.48). The High Pressure Coolant Injection System supports Appendix R Safe Shutdown. 10 CFR 54.4(a)(3)

7. Relied upon in safety analyses or plant evaluations to perform a function that demonstrates compliance with the Commission's regulations for Environmental Qualification (10 CFR 50.49). The High Pressure Coolant Injection System includes environmentally qualified electrical components. 10 CFR 54.4(a)(3)

8. Relied upon in safety analyses or plant evaluations to perform a function that demonstrates compliance with the Commission's regulations for Station Blackout (10 CFR 50.63). The High Pressure Coolant Injection System can be operated without AC power during a station blackout event to provide coolant to the reactor vessel. 10 CFR 54.4(a)(3)

UFSAR References

UFSAR 6.3
5.4.6

License Renewal Boundary Drawings

LR-M-08-0, Sheet 1
LR-M-41-1, Sheet 1
LR-M-49-1, Sheet 1
LR-M-51-1, Sheet 1
LR-M-55-1, Sheet 1
LR-M-56-1, Sheet 1

Table 2.3.2-5 High Pressure Coolant Injection (HPCI) System Components Subject to Aging Management Review

Component Type	Intended Function
Bolting	Mechanical Closure
Bolting (Class 1)	Mechanical Closure
Class 1 Piping, Fittings and Branch Connections < NPS 4"	Pressure Boundary
Condensing Chamber (Class 1)	Pressure Boundary
Filter Housing	Pressure Boundary
Flow Element	Pressure Boundary
Flow Element (HPCI Steam Flow Venturi) (Class 1)	Pressure Boundary
Gearbox	Pressure Boundary
Heat Exchanger Components (Lube Oil Cooler)	Heat Transfer
Heat Exchanger Components (Lube Oil Cooler)	Pressure Boundary
Hoses	Pressure Boundary
Piping and Fittings	Leakage Boundary
Piping and Fittings	Pressure Boundary
Piping and Fittings	Structural Support
Piping and Fittings (Class 1)	Pressure Boundary
Pump Casing (HPCI booster pump)	Pressure Boundary
Pump Casing (HPCI pump)	Pressure Boundary
Pump Casing (Jockey Pump)	Pressure Boundary
Pump Casing (Turbine Aux Oil Pump)	Pressure Boundary
Pump Casing (Turbine Main Oil Pump)	Pressure Boundary
Pump Casing (Vacuum Tank Condensate Pump)	Leakage Boundary
Restricting Orifices	Leakage Boundary
Restricting Orifices	Pressure Boundary
Restricting Orifices	Throttle
Restricting Orifices (Class 1)	Pressure Boundary
Restricting Orifices (Class 1)	Throttle
Sight Glasses	Leakage Boundary
Sight Glasses	Pressure Boundary
Sparger	Spray
Strainer	Filter

Component Type	Intended Function
Strainer	Pressure Boundary
Strainer Body	Pressure Boundary
Tank (Turbine Lube Oil Reservoirs)	Pressure Boundary
Tank (Vacuum Tank)	Leakage Boundary
Thermowell	Pressure Boundary
Turbine Casing	Pressure Boundary
Valve Body	Leakage Boundary
Valve Body	Pressure Boundary
Valve Body (Class 1)	Pressure Boundary

The aging management review results for these components are provided in:

Table 3.2.2-4 High Pressure Coolant Injection (HPCI) System Summary of Aging Management Evaluation

2.3.2.6 Hydrogen and Oxygen Analyzer System

System Purpose

The Hydrogen and Oxygen Analyzer System is a license renewal system and is part of the containment atmosphere control plant system. The Hydrogen and Oxygen Analyzer System is a safety-related system and is in scope for license renewal. However, portions of the Hydrogen and Oxygen Analyzer System are not required to perform intended functions and are not in scope. The Hydrogen and Oxygen Analyzer System has several interfaces with other systems that are not in the license renewal boundary of the Hydrogen and Oxygen Analyzer System.

The Hydrogen and Oxygen Analyzer System is a gas sampling system, consisting of two identical redundant trains, designed to monitor the hydrogen and oxygen concentration in the Primary Containment during accident conditions. The Hydrogen and Oxygen Analyzer System includes a permanently connected torus supplementary oxygen analyzer panel in the "A" train between the torus sample incoming and return lines. Additionally, the Hydrogen and Oxygen Analyzer System includes a portable drywell supplementary oxygen analyzer panel that can be connected through the Leak Detection and Radiation Monitoring System.

The purpose of the Hydrogen and Oxygen Analyzer System is to monitor the primary containment atmosphere to ensure that oxygen and hydrogen levels do not approach flammability limits. The Hydrogen and Oxygen Analyzer System accomplishes this purpose post accident and during normal power operations. During post accident operation, the Hydrogen and Oxygen Analyzer System processes a drywell atmosphere sample through one of two redundant hydrogen and oxygen analyzer loops. During normal power operation, the Hydrogen and Oxygen Analyzer System is in the standby mode, except for calibration or maintenance, and the supplementary oxygen monitoring portion of the Hydrogen and Oxygen Analyzer System is in service to monitor the oxygen concentration of the atmosphere in the drywell and torus areas. The purpose of the supplementary oxygen analyzers is to provide an alternate method of monitoring torus and drywell oxygen concentration.

The Hydrogen and Oxygen Analyzer System is started and removed from service manually.

System Operation

The Hydrogen and Oxygen Analyzer System is comprised of two identical redundant analyzer trains and two supplementary oxygen analyzer panels as backup to the redundant channels. Each redundant train consists of a hydrogen and oxygen analyzer cell, sample pump, indicators, recorder, system trouble alarm, calibration and reagent gas bottles and valves, and a control switch with indicating lights for the manual containment isolation valves. The indicators, recorders, alarms and control switches are located in the main control room. The Hydrogen and Oxygen Analyzer System is initiated manually. Sample gases are drawn from drywell head region, drywell cylindrical region and torus airspace through the analyzer cells by a diaphragm pump located in each analyzer panel. Each analyzer train can only sample one sample point at one time, at the discretion of the operator. All sample lines are electrically heat traced.

Two supplementary oxygen analyzers provide backup to the hydrogen and oxygen analyzers for the purpose of drywell oxygen monitoring and torus oxygen monitoring. Oxygen monitoring

during normal operation is accomplished by analyzing grab samples taken either through the supplementary torus oxygen analyzer, or through the supplementary drywell oxygen analyzer. The supplementary torus oxygen analyzer is permanently connected in the "A" train between the torus sample incoming and return lines of the hydrogen and oxygen analyzer panel, which can be utilized for torus oxygen sampling. The supplementary drywell oxygen analyzer is portable, and attaches directly to the drywell noble gas monitor grab sampler using quick disconnects within the Leak Detection and Radiation Monitoring System.

The supplementary torus oxygen analyzer is comprised of an oxygen analyzer, and a diaphragm sample pump, which draws and pressurizes the gas sample. Additionally the torus oxygen analyzer has a refrigerant and dryer assembly to remove moisture from sample stream.

Containment isolation valves for the Hydrogen and Oxygen Analyzer System automatically close upon high drywell pressure, low-low reactor water level, or reactor building ventilation exhaust high radiation. Closure of the containment isolation valves will result in isolation of the redundant hydrogen and oxygen analyzers, as well as the supplementary oxygen analyzer for the torus. The containment isolation valves can be individually opened manually from the main control room to reestablish a sample flow path to the Hydrogen and Oxygen Analyzer System.

For more detailed information, see UFSAR Section 6.2.5.2.5.

System Boundary

The Hydrogen and Oxygen Analyzer System boundary for each hydrogen and oxygen analyzer train begins at the sample line inlets located at two regions in the drywell, one in the drywell head region and one in the drywell cylindrical region, and one region in the torus air space, and continues through the hydrogen and oxygen analyzers. Flow from each region passes through two motor operated containment isolation valves, and then enters the corresponding hydrogen and oxygen analyzer train through electrically heat traced sample lines. Containment sample gases are then routed through parallel hydrogen and oxygen analyzer cells located within the analyzer train in the Reactor Building. Sample gases are drawn through the analyzer cells by a diaphragm pump located in the analyzer panel. Sample gas and recombined moisture exhaust is then routed back to the containment through a return line to the torus, where the Hydrogen and Oxygen Analyzer System boundary ends. The return line to the torus airspace is equipped with two motor operated containment isolation valves followed by a hand operated normally open globe valve. Included in the system boundary is a supplementary oxygen analyzer installed permanently between the sample line from the torus and discharge line to the torus on the "A" hydrogen and oxygen analyzer train. The primary containment isolation valves, which isolate this hydrogen and oxygen analyzer train, also isolate the supplementary oxygen analyzer. All associated piping, components, and instrumentation contained within the boundaries described above are included within the system evaluation boundary.

Not included in the Hydrogen and Oxygen Analyzer System license renewal scoping boundaries are the following systems or structures, which are evaluated separately:

Primary Containment
Leak Detection and Radiation Monitoring System (plant leak detection system)
Containment Isolation System

The supplementary oxygen analyzer portion of the Hydrogen and Oxygen Analyzer System, exclusive of its containment isolation boundaries, does not support the intended functions of the Hydrogen and Oxygen Analyzer System and is not included within the scope of license renewal.

Reason for Scope Determination

The Hydrogen and Oxygen Analyzer System meets 10 CFR 54.4(a)(1) because it is a safety-related system that is relied upon to remain functional during and following design basis events. The Hydrogen and Oxygen Analyzer System is not in scope under 10 CFR 54.4(a)(2) because failure of nonsafety-related portions of the system would not prevent satisfactory accomplishment of function(s) identified for 10 CFR 54.4(a)(1). It also meets 10 CFR 54.4(a)(3) because it is relied upon in safety analyses or plant evaluations to perform a function that demonstrates compliance with the Commission's regulations for Environmental Qualification (10 CFR 50.49) and Station Blackout (10 CFR 50.63). The Hydrogen and Oxygen Analyzer System is not relied upon in any safety analyses or plant evaluations to perform a function that demonstrates compliance with the Commission's regulation for Fire Protection (10 CFR 50.48), or Anticipated Transient Without Scram (10 CFR 50.62).

System Intended Functions

1. Provide primary containment boundary. The Hydrogen and Oxygen Analyzer System includes primary containment isolation valves that close on high drywell pressure, low-low reactor water level, and reactor building exhaust high radiation. 10 CFR 54.4(a)(1)

2. Control combustible gas mixtures in the primary containment atmosphere. The Hydrogen and Oxygen Analyzer System analyzes the primary containment post loss-of-coolant-accident for hydrogen and oxygen concentration. 10 CFR 54.4 (a)(1)

3. Relied upon in safety analyses or plant evaluations to perform a function that demonstrates compliance with the Commission's regulations for Environmental Qualification (10 CFR 50.49). The limit switches associated with the primary containment isolation valves within the Hydrogen and Oxygen Analyzer System are environmentally qualified. 10 CFR 54.4(a)(3)

4. Relied upon in safety analyses or plant evaluations to perform a function that demonstrates compliance with the Commission's regulations for Station Blackout (10 CFR 50.63). Provides miscellaneous instrumentation used by plant station blackout procedure to monitor plant conditions during coping, shutdown and restoration. 10 CFR 54.4(a)(3)

UFSAR References

6.2.5.2.5
7.3.1.1.6.3

License Renewal Boundary Drawings

LR-M-57-1, Sheet 1

Table 2.3.2-6 Hydrogen and Oxygen Analyzer System Components Subject to Aging Management Review

Component Type	Intended Function
Bolting	Mechanical Closure
Filter Housing	Pressure Boundary
Flow Device	Pressure Boundary
Heat Exchanger Components (Air Cooled - H2O2 Analyzer)	Heat Transfer
Heat Exchanger Components (Air Cooled - H2O2 Analyzer)	Pressure Boundary
Piping and Fittings	Pressure Boundary
Pump Casing (H2O2 Analyzer)	Pressure Boundary
Restricting Orifices	Pressure Boundary
Restricting Orifices	Throttle
Valve Body	Pressure Boundary

The aging management review results for these components are provided in:

Table 3.2.2-5 Hydrogen and Oxygen Analyzer System Summary of Aging Management Evaluation

2.3.2.7 Reactor Core Isolation Cooling (RCIC) System

System Purpose

The Reactor Core Isolation Cooling (RCIC) System is a standby high pressure safety-related system designed to ensure that sufficient reactor water inventory is maintained in the reactor vessel to allow for adequate core cooling. This prevents reactor fuel from overheating when (1) the reactor is isolated and maintained in the hot standby condition, (2) the reactor is isolated and accompanied by loss of the coolant flow from the feedwater system or (3) the reactor is shutdown under condition of loss of the normal feedwater system and prior to operation of the shutdown cooling system. The RCIC System supplies make-up water to the reactor vessel through a connection to the feedwater line when the reactor vessel is isolated from the main condenser. The water is distributed through the feedwater spargers to obtain mixing with the hot water or steam within the reactor vessel. RCIC can be operated on DC emergency power without the need for AC emergency power.

The RCIC System consists of the following plant systems: reactor core isolation cooling system and the reactor core isolation cooling turbine steam system. The RCIC System is in scope for License Renewal. However, portions of the RCIC System are not required to perform intended functions and are not in scope. The RCIC System has several interfaces with other systems that are not in the license renewal boundary of the RCIC System.

The primary purpose of the RCIC System is to provide sufficient coolant to the reactor vessel to prevent excessive fuel clad temperatures during a reactor shutdown in which feedwater flow is not available. The RCIC System accomplishes this purpose by delivering sufficient high pressure flow to maintain reactor vessel inventory and to ensure that the reactor core is not uncovered. The RCIC System operation is initiated automatically by reactor low low water level or can be initiated manually.

The RCIC System is a single loop system that is not single failure proof. Operation of the RCIC System is not credited in the 10 CFR 50 Appendix K evaluation.

System Operation

The Reactor Core Isolation Cooling (RCIC) System consists of a steam turbine, turbine driven pump, piping, valves, controls, and instrumentation.

The RCIC pump takes suction from either the condensate storage tank, through a common line to the HPCI pump suction, or the suppression pool, through the suppression pool strainer. The RCIC pump discharges to the reactor pressure vessel through the 'B' main feedwater line. A minimum flow bypass line is provided to protect the pump while operating against a closed discharge valve. This minimum flow bypass flowpath directs the RCIC pump discharge to the suppression pool.

During normal plant operation, the RCIC System is in a ready 'standby' condition. In this mode the RCIC jockey pump runs continuously to maintain the RCIC pump discharge line filled with water. The Condensate Storage and Transfer System supplies demineralized water for the filling of the RCIC System and can also be used to maintain RCIC pump discharge piping full if the jockey pump is out of service. Additionally, the turbine steam supply line is kept warm by admitting reactor steam up to the RCIC turbine steam supply shutoff valve. Condensate is

drained to the main condenser through a drain pot and steam trap.

Initiation of the RCIC System occurs upon receipt of a reactor low water level signal. The RCIC System can also be manually initiated. Once the RCIC System actuation signal is present, the turbine steam supply valve opens and the turbine ramps up to speed to drive the RCIC pump assembly. In addition, the test bypass valve to the condensate storage tank receives a close signal, the vacuum pump discharge drain valve closes and the vacuum pump starts.

The RCIC System main flow path initially takes suction from the condensate storage tank. If the water level in the condensate storage tank falls below a predetermined level or the suppression pool water level is high, the pump suction is automatically transferred to the suppression pool. This transfer may also be made from the main control room using manual controls.

The RCIC turbine is driven by steam from the reactor vessel generated by decay and residual heat. The steam is extracted from main steam line "A" upstream of the main steam isolation valves. The inboard and outboard RCIC containment isolation valves in the steam line to the RCIC turbine are normally open. This keeps the piping to the turbine at an elevated temperature to permit rapid startup of the RCIC System. The inboard isolation valve has a bypass line containing a normally closed valve. This bypass line permits pressure equalization and drainage around the isolation valve and downstream line warm-up prior to opening of the isolation valve.

A condensate drain pot is provided upstream of the RCIC turbine steam supply shutoff valve to prevent this line from filling with water. The drain pot normally routes the condensate to the main condenser. However, upon receipt of an RCIC System initiation signal, or upon loss of control air pressure, isolation valves on the condensate line automatically close to prevent loss of steam.

Exhaust steam from the RCIC turbine is discharged below the surface of the suppression pool. Condensate from the turbine exhaust line and from the turbine casing, ring, seat and chest drains is collected in the turbine exhaust drain pot. The collected condensate is discharged through an orifice to the RCIC gland seal condenser. Steam from the RCIC turbine gland seals is vented to and condensed in the gland seal condenser. The RCIC gland seal condenser vacuum pump maintains the gland seal condenser under vacuum conditions and removes non-condensable gases, which are normally pumped to the Filtration, Recirculation, and Ventilation System. The barometric condenser vacuum tank condensate pump maintains condensate level in the barometric condenser. The vacuum tank condensate pump takes suction from the vacuum tank and discharges to the suction of the RCIC pump when the RCIC System is in operation, or to the clean radwaste when the system is in the standby mode. The vacuum tank condensate pump automatically starts on a high level signal from the condenser vacuum tank and will automatically shut off when the high level signal is no longer present. The pump can also be manually started.

The gland seal condenser, gland seal condenser vacuum pump and associated piping and valves prevent contaminated steam from leaking into the RCIC room atmosphere during turbine operation.

A full-flow test line is provided to permit transfer of demineralized water from and to the condensate storage tank for testing of the RCIC System during normal plant operation.

The RCIC System is provided with pump room coolers to extract the heat generated by pump and turbine operation. Cooling water supplied to these coolers is evaluated with the Closed Cycle Cooling Water System. The airflow path for these coolers is evaluated with the Reactor Building Ventilation System. Operation of these coolers is required to support the RCIC System safety-related function.

For more detailed information, see UFSAR Section 5.4.6.

System Boundary

The RCIC System boundary for the water injection begins with the RCIC suction lines from the condensate storage tank and the suppression pool strainer. It continues through to the RCIC pump. The discharge path runs from the discharge side of the RCIC pump to the 'B' main feedwater line connection outside the primary containment. The discharge path also includes a minimum flow line to the torus and a flow test return line to the condensate storage tank.

Also included in the RCIC System boundary is the keep fill jockey pump that takes suction from the condensate storage tank supply header and discharges to the RCIC pump discharge header.

The RCIC boundary for the steam supply begins with the RCIC steam supply attachment piping at the 'A' Main Steam line and continues through the inboard and outboard RCIC containment isolation valves, RCIC steam admission stop valve and control valves, continues through the RCIC turbine, and the RCIC turbine exhausts to the suppression pool. Auxiliary systems include gland seal, drain pots, turbine oil, and turbine cooling water.

All associated piping, components and instrumentation, contained within flow paths and subsystems described above are included in the RCIC System evaluation boundary.

Also included in the RCIC System boundary is the condensate storage tank level instrumentation necessary to provide signals to initiate the swap of the RCIC suction source from the condensate storage tank to the suppression pool.

Included in the license renewal boundary of the RCIC System are those portions of nonsafety-related piping and equipment that extend beyond the safety-related/nonsafety-related interface up to the location of the first seismic anchor, or to a point no longer in proximity to equipment performing a safety-related function, whichever extends furthest. This includes the nonsafety-related portions of the system located within the Reactor Building. Included in the boundary are pressure retaining components located in the Reactor Building relied upon to preserve the leakage boundary intended function of the system. For more information, refer to the license renewal boundary drawing for identification of this boundary, shown in red.

Also included in the license renewal scoping boundary of the RCIC System are those portions of nonsafety-related piping and equipment that extend beyond the safety-related/nonsafety-related interface up to the location of the first seismic anchor. Included in this boundary are components relied upon to preserve the structural support intended function of this portion of the system, such as the piping and components associated with the RCIC gland seal condenser vacuum pump. This includes the suction piping from the barometric condenser vacuum tank through the RCIC gland seal condenser vacuum pump to the main condenser, including the recirculation piping from the vacuum pump back to the vacuum tank. For more

information, refer to the License Renewal Boundary Drawing for identification of this boundary, shown in red.

Not included in the RCIC license renewal scoping boundary are the following interfacing systems, which are separately evaluated as license renewal systems:

Condensate Storage and Transfer System
Condensate System
Feedwater System
Main Steam System
Primary Containment

Reason for Scope Determination

The Reactor Core Isolation Cooling system meets 10 CFR 54.4(a)(1) because it is a safety-related system that is relied upon to remain functional during and following design basis events. It meets 10 CFR 54.4(a)(2) because failure of nonsafety-related portions of the system could prevent satisfactory accomplishment of function(s) identified for 10 CFR 54.4(a)(1). It also meets 10 CFR 54.4(a)(3) because it is relied upon in the safety analyses or plant evaluations to perform a function that demonstrates compliance with the Commission's regulations for Fire Protection (10 CFR 50.48), Environmental Qualification (10 CFR 50.49), and Station Blackout (10 CFR 50.63). The Reactor Core Isolation Cooling system is not relied upon in any safety analyses or plant evaluations to perform a function that demonstrates compliance with the Commission's regulation for Anticipated Transient Without Scram (10 CFR 50.62).

System Intended Functions

1. Provide reactor coolant pressure boundary. The RCIC steam line and the pump discharge line include reactor coolant pressure boundary piping. 10 CFR 54.4 (a)(1)

2. Remove residual heat from the reactor coolant system. The RCIC System provides high pressure coolant flow to the reactor vessel. 10 CFR 54.4 (a)(1)

3. Provide primary containment boundary. The RCIC System includes piping and valves that are part of the primary containment boundary. 10 CFR 54.4(a)(1)

4. Sense process conditions and generate signals for reactor trip or engineered safety features actuation. The RCIC System includes suppression pool and condensate storage tank level instrumentation to perform automatic swap of the RCIC suction source from the condensate storage tank to the suppression pool. 10 CFR 54.4(a)(1)

5. Resist nonsafety-related SSC failure that could prevent satisfactory accomplishment of a safety-related function. The RCIC System includes nonsafety-related water filled lines in the Reactor Building that have the potential for spatial interactions (spray or leakage) or structurally interact with safety-related SSCs. 10 CFR 54.4(a)(2)

6. Relied upon in safety analyses or plant evaluations to perform a function that demonstrates compliance with the Commission's regulations for Fire Protection. (10 CFR 50.48) The RCIC System supports Appendix R Safe Shutdown. 10 CFR 54.4(a)(3)

7. Relied upon in safety analyses or plant evaluations to perform a function that demonstrates compliance with the Commission's regulations for Environmental Qualification. (10 CFR 50.49) The RCIC System includes environmentally qualified electrical components. 10 CFR 54.4(a)(3)

8. Relied upon in safety analyses or plant evaluations to perform a function that demonstrates compliance with the Commission's regulations for Station Blackout. (10 CFR 50.63) The RCIC System can be operated without AC power during a station blackout event to provide coolant to the reactor vessel. 10 CFR 54.4(a)(3)

UFSAR References

5.4.6

License Renewal Boundary Drawings

LR-M-08-0, Sheet 1
LR-M-49-1, Sheet 1
LR-M-50-1, Sheet 1
LR-M-51-1, Sheet 2

Table 2.3.2-7 Reactor Core Isolation Cooling (RCIC) System Components Subject to Aging Management Review

Component Type	Intended Function
Bolting	Mechanical Closure
Bolting (Class 1)	Mechanical Closure
Class 1 Piping, Fittings and Branch Connections < NPS 4"	Pressure Boundary
Drain Traps	Leakage Boundary
Filter Housing	Pressure Boundary
Flow Element	Pressure Boundary
Flow Element (Class 1)	Pressure Boundary
Heat Exchanger Components (Lube Oil Cooler)	Heat Transfer
Heat Exchanger Components (Lube Oil Cooler)	Pressure Boundary
Hoses	Pressure Boundary
Piping and Fittings	Leakage Boundary
Piping and Fittings	Pressure Boundary
Piping and Fittings	Structural Support
Piping and Fittings (Class 1)	Pressure Boundary
Pump Casing (Jockey Pump)	Pressure Boundary
Pump Casing (RCIC Gland Seal Cond. Vacuum Pump)	Structural Support
Pump Casing (RCIC Pump)	Pressure Boundary
Pump Casing (Turbine Aux Oil Pump)	Pressure Boundary
Pump Casing (Turbine Main Oil Pump)	Pressure Boundary
Pump Casing (Vacuum Tank Condensate Pump)	Leakage Boundary
Restricting Orifices	Pressure Boundary
Restricting Orifices	Throttle
Restricting Orifices (Class 1)	Pressure Boundary
Restricting Orifices (Class 1)	Throttle
Sight Glasses	Leakage Boundary
Sight Glasses	Pressure Boundary
Sparger (Turbine Exhaust)	Spray
Strainer	Filter
Strainer	Pressure Boundary
Strainer Body	Pressure Boundary

Component Type	Intended Function
Tank (Turbine Lube Oil Reservoirs)	Pressure Boundary
Tank (Vacuum Tank)	Leakage Boundary
Thermowell	Pressure Boundary
Turbine Casing	Pressure Boundary
Valve Body	Leakage Boundary
Valve Body	Pressure Boundary
Valve Body	Structural Support
Valve Body (Class 1)	Pressure Boundary

The aging management review results for these components are provided in:

Table 3.2.2-6 Reactor Core Isolation Cooling (RCIC) System Summary of Aging Management Evaluation

2.3.2.8 Residual Heat Removal (RHR) System

System Purpose

Residual Heat Removal System is a low pressure emergency core cooling system designed to provide cooling water for removal of fission product heat from the reactor core and primary containment following postulated design bases events or normal operation. Large-to-intermediate pipe breaks in the reactor coolant system result in a reactor pressure reduction sufficient to permit the Residual Heat Removal System to achieve its rated injection flow to limit fuel clad maximum temperature. To accommodate the remaining intermediate-to-small pipe breaks, the Residual Heat Removal System also functions, in conjunction with the Automatic Depressurization System, to limit fuel clad temperature during a LOCA when the reactor vessel is not rapidly depressurized and the High Pressure Coolant Injection (HPCI) System, Reactor Core Isolation Cooling (RCIC) System, Feedwater System or Control Rod Drive System cannot adequately cool the reactor core. In this manner, the Residual Heat Removal System provides core cooling such that the maximum allowable fuel clad temperature limit is not reached for the entire spectrum of postulated LOCAs. With the exception of the shutdown suction, shutdown return, and head spray line, the entire Residual Heat Removal System is part of the emergency core cooling system and the primary containment cooling function.

The Residual Heat Removal System has three primary and two secondary functions of operation. The first two primary purposes of the Residual Heat Removal System are to provide for the post design bases events fission product heat removal from the reactor core so that fuel clad temperature limits is maintained and remove heat from primary containment to ensure structural pressure and temperature limits are maintained. The Residual Heat Removal System accomplishes the two primary purpose by the low pressure coolant injection and containment spray modes which deliver low-pressure coolant to the reactor vessel, limiting peak clad temperature to less than the maximum allowable limit, and to primary containment, maintaining the structure temperature and pressure less than its maximum design limit. Fission product decay heat is removed from the core and primary containment by the Residual Heat Removal System and is transported to the torus. The Residual Heat Removal heat exchangers remove the heat from the torus and transfer the heat to the safety auxiliary cooling system, which is evaluated in the Closed Cycle Cooling Water System.

The third primary purpose of the Residual Heat Removal System is to remove the decay and sensible heat from the reactor primary system to permit cold shutdown for refueling. The Residual Heat Removal System accomplishes this purpose in the shutdown cooling mode by manually opening valves that have piping interconnections with Reactor Recirculation System suction piping, directing flow through the Residual Heat Removal heat exchangers which removes heat from the reactor and returns the flow to Reactor Recirculation discharge piping, therefore allowing shutdown.

The two secondary purposes of the Residual Heat Removal System are to augment fuel pool cooling by removing decay heat of the spent fuel and to provide an alternate source of water from a non-NSSS intertie between the Station Service Water System and the Residual Heat Removal System piping which allows water to flood the reactor containment during the period following a LOCA.

The emergency core cooling system low pressure coolant injection mode of the Residual Heat Removal System operation is initiated automatically by either reactor low-low-low water level or high drywell pressure, or can be initiated manually. The other modes of the Residual Heat Removal system are manually initiated.

No single failure in the Residual Heat Removal System can cause all four loops to malfunction. Operation of the Residual Heat Removal System loops is credited in the 10 CFR 50 Appendix K evaluations.

System Operation

The Residual Heat Removal System is comprised of four independent loops. Each loop contains a motor driven pump, piping, valves, instrumentation, and controls. Each loop takes suction from the torus and is capable of discharging water to the reactor vessel via separate low-pressure coolant injection nozzles. Each Residual Heat Removal System loop contains full flow test, keep-fill, and minimum flow pump protection features. Flow and pressure instrumentation are provided in the control room for each loop. In addition, there are residual heat removal pump discharge header crossties between loops with two manual isolation valves. The purpose of these crossties is to permit alternate decay heat removal. Two of the residual heat removal loops have heat exchangers that are each cooled by an independent loop of the safety auxiliaries cooling system, which is evaluated in the Closed Cycle Cooling Water System. The two residual heat removal heat exchanger loops can also take suction from the Reactor Recirculation System suction or the fuel pool and can discharge into the reactor recirculation pump discharge, fuel pool cooling discharge, or to the torus and drywell spray spargers

The Residual Heat Removal System has six modes of operation. Each mode is discussed separately to provide clarity. First is operating in the ECCS low pressure coolant injection mode. The Residual Heat Removal System functions in conjunction with other emergency core cooling system to restore and maintain reactor coolant inventory following a LOCA. The low pressure coolant injection mode provides water from the torus directly to the reactor vessel. Second is the primary containment spray mode that supplies water from the torus directly to the free air space of the torus and drywell. Directing spray flow to the air space condenses the steam and thereby reduces containment pressure and temperature. Torus cooling is the third mode. Heat is removed from the torus to ensure the Residual Heat Removal System's ability to perform temperature and pressure suppression and to maintain containment integrity. The fourth mode is shutdown cooling which pumps the water from reactor recirculation suction piping through the residual heat removal heat exchangers and returns the water to the respective recirculation discharge loop. The fuel pool cooling assist mode is the fifth mode of operation. The Residual Heat Removal System can be manually aligned to provide cooling for the spent fuel pool if additional cooling is required. Finally, the sixth mode is alternate injection. If other sources are not available for reactor pressure vessel level restoration or flooding, the Service Water System can be aligned to the Residual Heat Removal System to supply water to the reactor pressure vessel.

The Residual Heat Removal System (emergency core cooling system) takes suction from the torus through strainers. The emergency core cooling system discharge is through the system isolation valves, to the reactor vessel or spray spargers into the Primary Containment. The emergency core cooling system low pressure coolant injection flow path into the reactor vessel for each Residual Heat Removal System is suction through the strainer in the torus, through four residual heat removal pumps, continuing through the outboard motor isolation valve,

through the inboard air-operated check valve, and into the reactor vessel for discharge onto the core through the associated reactor vessel nozzle. All motor-operated valves in the emergency core cooling system low pressure coolant injection flow path of each loop are normally open during system standby, with the exception of a downstream motor isolation valve in the discharge header located outside the drywell. The flow path for primary containment spray is essentially the same as the emergency core cooling system low pressure coolant injection flow path except flow is diverted to the drywell and torus spray hearers. The Residual Heat Removal System piping and components in the pressure boundary are considered an extension of the primary containment boundary. Upon receipt of the initiation signal, all residual heat removal pumps in each Residual Heat Removal System loop starts.

Initiation of the four emergency core cooling system loops of the Residual Heat Removal System occurs upon receipt of a high drywell pressure or low-low-low reactor vessel level signal. These signals also start the emergency diesel generators, in order to supply power to the RHR pumps in the event of loss of normal electric power supply. The Residual Heat Removal System (emergency core cooling system) low pressure coolant injection loop can also be initiated manually. Once the reactor pressure drops below a preset value and the Residual Heat Removal System actuation signal is present, the motor-operated isolation valves in the discharge headers receive a permissive signal to open. Opening of the motor-operated isolation valves in the discharge headers completes the flowpath, and injection water from the four loops enters the reactor vessel through four penetrations.

After Residual Heat Removal System flow has been established into the vessel, the torus provides an essentially unlimited supply of cooling water. Water discharged from a pipe break inside the drywell will overflow through the drywell vents into the torus. During Residual Heat Removal System operation, the heat being absorbed by the water that flows back to the torus is transferred to the ultimate heat sink through the safety auxiliaries cooling system by the heat exchangers in the Residual Heat Removal System.

In the residual heat removal torus cooling mode of operation the Residual Heat Removal System has the capability of providing cooling of the water in the torus by manual operation of a motor operated valve to direct water from the torus pool through the residual heat removal pumps and heat exchanger and return the water to the torus pool.

The equipment area cooling system, which is part of the Reactor Building Ventilation System, is a safety related ventilation system that provides standby supplementary cooling to each Residual Heat Removal System pump room, where normal ventilation requirements would be excessive, in order to relieve the equipment heat gain. Each Residual Heat Removal System pump room is provided with two coolers sized to extract the heat generated by pump operation. Cooling water is supplied to these coolers from the safety and turbine auxiliaries cooling system and is evaluated with the Closed Cycle Cooling Water System. Air flow path for these coolers is evaluated with the Reactor Building Ventilation System.

For more detailed information, see UFSAR sections 5.4.7 and 6.3.

System Boundary

The Residual Heat Removal System has several piping flow paths that are part of this system boundary. The Residual Heat Removal System boundary begins with the strainers in the torus and includes residual heat removal pumps that take suction through individual suction headers from each strainer, continuing through the suction isolation valves, through the pump to the

discharge piping with one outboard motor operated isolation valves outside of containment, continues through the inboard air operated check valve inside containment, and terminates where each residual heat removal loop is attached to the reactor vessel nozzle. Included are the primary containment spray lines that are connected to the residual heat removal pump discharge lines. Also included in this boundary is the minimum flow line full flow test line on each loop, pressure relief valve line on each discharge line that goes back to the torus, the cross tie line, and the piping keep-fill pumps and lines. The keep-fill piping takes suction from the suction side of the residual heat removal pumps, through the keep-fill pump back into the to the residual heat removal pump discharge piping, continues to the discharge side of the residual heat removal pumps and the Core Spray System. The Residual Heat Removal System boundary also includes the suction piping from the Reactor Recirculation System, through the residual heat removal pumps to the residual heat removal heat exchangers and return to the reactor recirculation discharge piping. The boundary with the Fuel Pool Cooling and Cleanup and the Service Water Systems are at the normally closed isolation valve to the attachment point on these systems where the piping is attached to these systems. All associated piping, components, and instrumentation contained within the flowpath discussed above are included in the system boundary.

Also included in the license renewal scoping boundary of the Residual Heat Removal System are those portions of nonsafety-related piping and equipment that extend beyond the safety-related/nonsafety-related interface up to the location of the first seismic anchor, or to a point no longer in proximity to equipment performing a safety-related function, whichever extends furthest. This includes the nonsafety-related portions of the system located within the Reactor Building. Included in this boundary are pressure retaining components relied upon to preserve the leakage boundary intended function of this portion of the system. For more information, refer to the License Renewal Boundary Drawing for identification of this boundary, shown in red.

Not included in the scope of the license renewal are the reactor vessel nozzles, which are evaluated with the Reactor Pressure Vessel, and downstream piping located inside the reactor vessel, which is evaluated with the Reactor Internals scoping boundary.

Not included in the Residual Heat Removal license renewal scoping boundary are the following interfacing systems, which are separately evaluated as license renewal systems:

Closed Cycle Cooling Water System
Compressed Air System
Condensate Storage and Transfer System
Core Spray System
Fuel Pool Cooling and Cleanup System
Primary Containment
Primary Containment Instrument Gas System
Reactor Internals
Reactor Pressure Vessel
Reactor Recirculation System
Service Water System

Reason for Scope Determination

The Residual Heat Removal System meets the scoping requirements of 10 CFR 54.4(a)(1) because it is a safety-related system which is relied upon to remain functional during and following design basis events. It meets 10 CFR 54.4(a)(2) because failure of nonsafety-related portions of the system could prevent satisfactory accomplishment of function(s) identified for 10 CFR 54.4(a)(1). It does meet 10 CFR 54.4(a)(3) because it is relied upon in the safety analyses or plant evaluations to perform a function that demonstrates compliance with the Commission's regulations for Fire Protection (10 CFR 50.48), Environmental Qualification (10 CFR 50.49), and Station Blackout (10 CFR 50.63). The Residual Heat Removal System is not relied upon in any safety analyses or plant evaluations to perform a function that demonstrates compliance with the Commission's regulation for Anticipated Transient Without Scram (10 CFR 50.62).

System Intended Functions

1. Provide reactor coolant pressure boundary. The Residual Heat Removal System provides isolation from the reactor coolant pressure boundary. 10 CFR 54.4(a)(1)

2. Sense process conditions and generate signals for reactor trip or engineered safety features actuation. The Residual Heat Removal System includes the associated actuation logic. 10 CFR 54.4(a)(1)

3. Remove residual heat from the reactor coolant system. The Residual Heat Removal System has torus water heat removal capabilities following a LOCA that transfers the energy to the ultimate heat sink via the safety and auxiliary cooling system by the heat exchangers in the Residual Heat Removal System. 10 CFR 54.4 (a)(1)

4. Provide emergency core cooling where the equipment provides coolant directly to the core. The Residual Heat Removal System provides the emergency core cooling system function to limit peak clad temperatures below 2200° F, maintain local oxidization of clad to a thickness not exceeding seventeen percent of unoxidized clad, limit hydrogen generation from the metal-water reaction to not greater than one percent of the calculated value for the total metal-water reaction hydrogen generation, maintain a coolable geometry, and provide long term cooling. Minimum flow capability provides pump protection to assure capability of emergency core cooling system function. 10 CFR 54.4 (a)(1)

5. Provide primary containment boundary. The Residual Heat Removal System piping contains valves, which are considered containment isolation devices. 10 CFR 54.4 (a)(1)

6. Provide emergency heat removal from primary containment and provide containment pressure control. Residual Heat Removal System has the capability to remove heat energy and maintain the Primary Containment pressure and temperature within acceptable limits following a LOCA. 10 CFR 54.4 (a)(1)

7. Resist nonsafety-related SSC failure that could prevent satisfactory accomplishment of a safety-related function. The Residual Heat Removal system includes nonsafety-related water filled lines in the Reactor Building that have the potential for spatial interactions (spray or leakage) with safety-related SSCs. 10 CFR 54.4(a)(2)

8. Relied upon in safety analyses or plant evaluations to perform a function that demonstrates compliance with the Commission's regulations for Fire Protection (10 CFR 50.48). Residual Heat Removal System is part of Appendix R shut down method. 10 CFR 54.4(a)(3)

9. Relied upon in safety analyses or plant evaluations to perform a function that demonstrates compliance with the Commission's regulations for Environmental Qualification (10 CFR 50.49). Residual Heat Removal System has components that are in the Environmental Qualification program. 10 CFR 54.4(a)(3)

10. Relied upon in safety analyses or plant evaluations to perform a function that demonstrates compliance with the Commission's regulations for Station Blackout (10 CFR 50.63). Residual Heat Removal System lines provide a containment isolation function. 10 CFR 54.4(a)(3)

UFSAR References

5.4.7
6.3
6.3.2.2.4

License Renewal Boundary Drawings

LR-M-10-1, Sheet 2
LR-M-23-1, Sheet 2
LR-M-38-0, Sheet 1
LR-M-41-1, Sheet 1
LR-M-43-1, Sheet 1
LR-M-51-1, Sheet 1
LR-M-51-1, Sheet 2
LR-M-52-1, Sheet 1
LR-M-58-1, Sheet 1
LR-M-87-1, Sheet 2

Table 2.3.2-8 Residual Heat Removal (RHR) System Components Subject to Aging Management Review

Component Type	Intended Function
Bolting	Mechanical Closure
Bolting (Class 1)	Mechanical Closure
Class 1 Piping, Fittings and Branch Connections < NPS 4"	Pressure Boundary
Cyclone Separator (on RHR Pump)	Pressure Boundary
Flow Element	Pressure Boundary
Heat Exchanger Components (RHR)	Evaluated with the Closed Cycle Cooling Water System
Piping and Fittings	Leakage Boundary
Piping and Fittings	Pressure Boundary
Piping and Fittings (Class 1)	Pressure Boundary
Pump Casing (Jockey)	Pressure Boundary
Pump Casing (RHR)	Pressure Boundary
Restricting Orifices	Pressure Boundary
Restricting Orifices	Throttle
Restricting Orifices (Class 1)	Pressure Boundary
Restricting Orifices (Class 1)	Throttle
Sight Glasses	Leakage Boundary
Spray Nozzles	Spray
Strainer	Filter
Strainer	Pressure Boundary
Thermowell	Pressure Boundary
Valve Body	Leakage Boundary
Valve Body	Pressure Boundary
Valve Body (Class 1)	Pressure Boundary

The aging management review results for these components are provided in:

Table 3.2.2-7 Residual Heat Removal (RHR) System Summary of Aging Management Evaluation

2.3.2.9 Vacuum Relief Valve System

System Purpose

The license renewal Vacuum Relief Valve System is part of the containment atmosphere control plant system. The Vacuum Relief Valve System consists of two independent subsystems, the torus to drywell pressure relief subsystem and the reactor building to torus pressure relief subsystem.

The torus to drywell pressure relief subsystem is designed to prevent torus water from backing up into the drywell during various reactor leakage and suppression condensation modes. The purpose of the torus to the drywell pressure relief subsystem is to prevent the drywell pressure from dropping significantly below the pressure in the torus airspace, and to prevent exceeding design external pressures of the drywell. The torus to drywell pressure relief subsystem is comprised of vacuum breakers that accomplish their purpose by automatically venting non-condensable gas (carryover to the torus during an accident) back to the drywell from the torus.

The reactor building to torus pressure relief subsystem limits the torus negative pressure relative to the Reactor Building pressure. This subsystem limits drywell negative pressures relative to the Reactor Building pressure and permits gas flow only inward from the Reactor Building to the Primary Containment. The reactor building to torus pressure relief subsystem is comprised of vacuum breakers that accomplish their purpose by opening automatically at a predetermined differential pressure.

System Operation

The Primary Containment is provided with a Vacuum Relief Valve System to equalize the pressure between the drywell and the torus, and between the torus and the Reactor Building. The Vacuum Relief Valve System assures that the external design pressure limits of the two chambers are not exceeded. The design bases accident is the complete instantaneous circumferential break of one of the recirculation suction lines while the reactor is at rated power. The air-steam mixture is vented to the torus. Within the first few seconds, drywell air is swept into the torus water space. Because of the high velocity steam within the vents, the air cannot diffuse back into the drywell and it is effectively forced into the torus water space. After blowdown is complete, steam is present in the drywell. As the steam condenses on various surfaces and the drywell spray is activated, the drywell pressure drops. This allows the torus to drywell vacuum breakers to open admitting the gas from the torus air space into the drywell, thus equalizing the pressures.

The torus to drywell pressure relief subsystem is comprised of eight self-actuating vacuum breaker assemblies, each connected between the torus and a drywell vent line. These valves permit flow from the torus air space into the drywell to torus vent line air space, when pressure differential between the torus and drywell is sufficient to open the check valve. The check valve prevents air from flowing in the opposite direction. The Vacuum Relief Valve System prevents the external design pressure limits of the two chambers from being exceeded.

The reactor building to torus relief subsystem is comprised of two sets of vacuum breaker assemblies located 180 degrees apart on top of the torus. Each set consists of a self-actuated swing check valve and a pneumatic operated butterfly valve. The check valve permits air to flow from the Reactor Building into the torus, when pressure differential between the Reactor

Building and torus air pressure is sufficient to open the valve. Cooling of the torus can cause negative pressure to develop. The check valve prevents air from flowing in the opposite direction. A butterfly valve on each path provides positive isolation of the Primary Containment. A differential pressure switch between the Reactor Building and torus opens the air-operated valve automatically.

For more detailed information, see UFSAR Section 7.3.1.1.6.

System Boundary

The torus to drywell pressure relief subsystem boundary begins at the eight connections to the drywell vent header, and continues through the swing check valves and terminates at the inlet to the check valve, which is open to the torus air space.

The reactor building to torus vacuum relief breaker subsystem starts at a vent opening in the Reactor Building and terminates at a point downstream of the containment isolation valves on the containment prepurge cleanup system supply lines to the torus. Not included in the boundary is the portion of piping downstream of this connection point all the way to the torus, which is evaluated separately in the Containment Inerting and Purging System license renewal system boundary. Also, not included in the vacuum relief valve system boundary are the gas supplies to the host pneumatic components or users. The host pneumatic components or users are the torus to drywell vacuum breakers and the reactor building to torus vacuum relief breakers. The gas supplies to the Vacuum Relief Valve System are evaluated in the Primary Containment Instrument Gas System package.

All associated piping, components, and instrumentation contained within the flowpath described above are included in the Vacuum Relief Valve System.

Not included in the Vacuum Relief Valve System scoping boundaries are the following interfacing systems, which are separately evaluated as license renewal systems:

Compressed Air System
Containment Inerting and Purging System
Primary Containment Instrument Gas System
Reactor Building Ventilation System (containment prepurge cleanup subsystem)

Reason for Scope Determination

The Vacuum Relief Valve System meets 10 CFR 54.4(a)(1) because it is a safety-related system that is relied upon to remain functional during and following design basis events. The Vacuum Relief Valve System is not in scope under 10 CFR 54.4(a)(2) because failure of nonsafety-related portions of the system would not prevent satisfactory accomplishment of function(s) identified for 10 CFR 54.4(a)(1). The Vacuum Relief Valve System meets 10 CFR 54.4(a)(3) because it is relied upon in safety analyses or plant evaluations to perform a function that demonstrates compliance with the Commission's regulations for Environmental Qualification (10 CFR 50.49). The Vacuum Relief Valve System is not relied upon in any safety analyses or plant evaluations to perform a function that demonstrates compliance with the Commission's regulation for Fire Protection (10 CFR 50.48), Anticipated Transient Without Scram (10 CFR 50.62), or Station Blackout (10 CFR 50.63).

System Intended Functions

1. Provide primary containment boundary. The Vacuum Relief Valve System includes primary containment isolation valves that close to prevent the release of radioactive contamination through system lines. 10 CFR 54.4(a)(1)

2. Provide emergency heat removal from primary containment and provide containment pressure control. The torus to drywell pressure relief subsystem of the Vacuum Relief Valve system prevents exceeding design external pressures of drywell, and the reactor building to torus vacuum breaker subsystem of the Vacuum Relief Valve System prevents exceeding the design external pressure of the torus. 10 CFR 54.4(a)(1)

3. Control combustible gas mixtures in the primary containment atmosphere. The Vacuum Relief Valve System is used for post accident combustible gas control of the primary containment atmosphere. 10 CFR 54.4 (a)(1)

4. Relied upon in safety analyses or plant evaluations to perform a function that demonstrates compliance with the Commission's regulations for Environmental Qualification (10 CFR 50.49). The limit switches associated with the torus to drywell vacuum breakers and the reactor building to torus vacuum breakers are Environmentally Qualified. 10 CFR 54.4(a)(3)

UFSAR References

7.3.1.1.6

License Renewal Boundary Drawings

LR-M-57-1, Sheet 1

Table 2.3.2-9 Vacuum Relief Valve System
Components Subject to Aging Management Review

Component Type	Intended Function
Bolting	Mechanical Closure
Piping and Fittings	Pressure Boundary
Valve Body	Pressure Boundary

The aging management review results for these components are provided in:

Table 3.2.2-8 Vacuum Relief Valve System
Summary of Aging Management Evaluation

2.3.3 AUXILIARY SYSTEMS

The following systems are addressed in this section:

- Chilled Water System (2.3.3.1)
- Closed Cycle Cooling Water System (2.3.3.2)
- Compressed Air System (2.3.3.3)
- Containment Inerting and Purging System (2.3.3.4)
- Control Area Chilled Water System (2.3.3.5)
- Control Rod Drive System (2.3.3.6)
- Control Room and Control Area HVAC Systems (2.3.3.7)
- Cranes & Hoists (2.3.3.8)
- Equipment and Floor Drainage System (2.3.3.9)
- Fire Protection System (2.3.3.10)
- Fire Pump House Ventilation System (2.3.3.11)
- Fresh Water Supply System (2.3.3.12)
- Fuel Handling and Storage System (2.3.3.13)
- Fuel Pool Cooling and Cleanup System (2.3.3.14)
- Hardened Torus Vent System (2.3.3.15)
- Hydrogen Water Chemistry System (2.3.3.16)
- Leak Detection and Radiation Monitoring System (2.3.3.17)
- Makeup Demineralizer System (2.3.3.18)
- Primary Containment Instrument Gas System (2.3.3.19)
- Primary Containment Leakage Rate Testing System (2.3.3.20)
- Process and Post-Accident Sampling Systems (2.3.3.21)
- Radwaste System (2.3.3.22)
- Reactor Building Ventilation System (2.3.3.23)
- Reactor Water Cleanup System (2.3.3.24)
- Remote Shutdown Panel Room HVAC System (2.3.3.25)
- Service Water Intake Ventilation System (2.3.3.26)
- Service Water System (2.3.3.27)
- Standby Diesel Generator Area Ventilation Systems (2.3.3.28)
- Standby Diesel Generators and Auxiliary Systems (2.3.3.29)
- Standby Liquid Control System (2.3.3.30)
- Torus Water Cleanup System (2.3.3.31)
- Traversing Incore Probe System (2.3.3.32)

2.3.3.1 Chilled Water System

System Purpose

The Chilled Water System is a closed-loop system designed to provide demineralized cooling water to plant air handling and cooling units during normal operation in the Reactor, Auxiliary, and Turbine Buildings. Included in the Chilled Water System is chemical treatment equipment designed to minimize corrosion by maintaining demineralized water quality. Large portions of the Chilled Water System are not required to perform intended functions and are not in scope.

The purpose of the Chilled Water System is to remove heat from the following loads during various modes of reactor operation: Auxiliary Building Service and Radwaste HVAC System (auxiliary building service area air supply cooling coils, auxiliary building solid radwaste area air supply cooling coils, radwaste area coolers, radwaste supply cooling coils), Drywell Air Cooling System (drywell unit coolers), Main Condenser Air Extraction System (mechanical vacuum pump seal water coolers), Miscellaneous Ventilation Systems (feedwater heater room coolers, primary and secondary condensate pump room unit coolers, turbine building supply unit cooling coils), Process and Post-Accident Sampling System (iso-thermal bath, turbine building cooling water mixing skid), Equipment and Floor Drainage System (drywell equipment drain sump cooler), Reactor Building Ventilation System (control rod drive facility unit coolers, steam tunnel unit coolers, reactor building ventilation system supply unit coolers), Reactor Recirculation System (reactor recirculation pump motor air coolers). The Chilled Water System accomplishes this purpose by transferring heat from these loads to the chiller units, which reject the heat from the chilled water to the turbine auxiliary cooling system portion of the Closed Cycle Cooling Water System. Flow and temperature control is achieved through both local and remote manual manipulation of the chilled water system valves.

System Operation

The Chilled Water System is comprised of three one-half capacity pumps, and four one-third capacity skid mounted chillers. Each chiller consists of one condenser unit, one compressor motor, one evaporator, one pump-out unit and one storage tank. Additional components in the Chilled Water System include the chemical treatment system, a head tank, various air cooling coils, and necessary controls and support equipment.

The chilled water system circulation pumps discharge to a common header, which branches into the chiller supply header. From this header, the water enters the chiller unit evaporators where heat is rejected from the water to the chiller unit refrigerant. The chilled water is returned to the common supply header for parallel redistribution to various systems and components throughout the plant. Chilled water from various cooled systems and components flows into a common return header and is routed to the suction of the chilled water circulation pumps. Heat absorbed by the chiller unit refrigerant is rejected to the turbine auxiliary cooling system portion of the Closed Cycle Cooling Water System. One circulation pump and one chiller are normally in standby.

The chemical treatment system is comprised of a chemical feed tank, a mechanical duplex side stream filter, an activated carbon side stream filter, and a side stream mixed bed demineralizer. The chemical feed tank provides a means of adding corrosion inhibiting chemicals to the system. Water is drawn from the discharge header of the chilled water circulation pumps and the solution is injected upstream of the pumps in the common pump

suction header. The chemical addition tank is not currently used.

A head tank is provided at the high point of the system to provide net positive suction head for the chilled water circulation pumps and is sized to hold the expected maximum expansion of the Chilled Water System. Makeup to the head tank from the Makeup Demineralizer System can be added manually or by an automatic level control valve. Makeup flowrate is monitored and recorded to provide an indication of chilled water system leakage.

The chilled water pumps, the chilled water chiller units, and the chemical treatment system are located within the Turbine Building. The Chilled Water System supply penetrates the Primary Containment at two safety-related penetrations to provide two independent loops of the chilled water cooling to the Drywell Air Cooling System (drywell unit coolers), Equipment and Floor Drainage System (drywell sump cooler), and Reactor Recirculation System (reactor recirculation pump motor air cooler). The return from the Primary Containment loads exits the Primary Containment through two other safety-related penetrations. Each of the chilled water system supply and return flow lines, into and out of the Primary Containment, is equipped with inboard and outboard motor operated valves in series. These safety-related valves automatically close upon either low-low-low reactor level, high drywell pressure, or core spray initiation. Deliberate operator action is required to reopen these isolation valves.

The loss-of-coolant-accident signal results in loss of the Chilled Water System due to loss of the turbine auxiliary cooling system. The reactor auxiliary cooling system portion of the Closed Cycle Cooling Water System provides backup for the Chilled Water System loads within the Primary Containment (drywell coolers, drywell equipment sump cooler, recirculation pumps motor air coolers) upon a loss-of- offsite-power event. The chilled water circulation pumps and chillers trip in response to loss-of-offsite-power.

The Chilled Water System starts manually, but once started its operation is automatic. The standby chilled water circulation pump starts automatically on low flow conditions through either one of the operating pumps. The standby chiller requires operator action. The motive force for the chilled water circulation pumps, chiller compressors and motor operated valves is nonsafety-related AC power.

For more detailed information, see UFSAR Section 9.2.7.

System Boundary

The Chilled Water System boundary begins at the chilled water system circulation pumps and continues through the water chillers and through all the cooled loads (auxiliary building service area air supply cooling coils, auxiliary building solid radwaste area air supply cooling coils, control rod drive facility unit coolers, drywell equipment drain sump cooler, drywell unit coolers, feedwater heater room coolers, iso-thermal bath, mechanical vacuum pump seal water coolers, primary and secondary condensate pump room unit coolers, radwaste area coolers, radwaste supply cooling coils, reactor building ventilation system supply unit coolers, reactor recirculation pump motor air coolers, steam tunnel coolers, turbine building cooling water mixing skid, and turbine building supply unit cooling coil). The boundary continues from the cooled loads back to the suction of the chilled water system circulation pumps. Included in the boundary are the chilled water system chemical treatment equipment, the chilled water system head tank, and the chilled water system primary containment isolation valves. All associated piping, components, and instrumentation contained within the flow path described above are also included in the chilled water system boundary.

Included in the license renewal boundary of the Chilled Water System are those portions of nonsafety-related piping and equipment that extend beyond the safety-related and nonsafety-related interface up to the location of the first seismic anchor, or to a point no longer in proximity to equipment performing a safety-related function, whichever extends furthest. This includes the nonsafety-related portions of the system located within Auxiliary Building, Primary Containment, and the Reactor Building. Also included in the boundary are the pressure retaining components located in the Auxiliary Building, Primary Containment and the Reactor Building relied upon to preserve the leakage boundary intended function of this portion of the system. For more information, refer to the license renewal boundary drawing for identification of this boundary, shown in red.

Not included in the scope of license renewal for leakage boundary is the drywell equipment drain sump cooling coil. This cooler is internal to component or enclosed panel and do not create the potential for spatial interaction (leakage or spray) with safety related equipment. Also not included in the scope of license renewal for leakage boundary is the reactor building ventilation supply unit coolers. These coolers are located in the Auxiliary Building Radwaste Area, and do not create the potential for spatial interaction (leakage or spray) with safety related equipment.

Not included in the Chilled Water System license renewal scoping boundaries are the following interfacing systems, which are separately evaluated as license renewal systems:

Auxiliary Building Service and Radwaste HVAC Systems
Closed Cycle Cooling Water System
Compressed Air System (Instrument (Control) Air System)
Drywell Air Cooling System
Equipment and Floor Drainage System
Leak Detection and Radiation Monitoring System (Plant Leak Detection System)
Main Condenser Air Extraction System
Makeup Demineralizer System
Miscellaneous Ventilation System
Process and Post-Accident Sampling System
Radwaste System
Reactor Building Ventilation System
Reactor Recirculation System

Not included in the scope of license renewal is the portion of the Chilled Water System located in the Turbine Building and Auxiliary Building Radwaste Area, as these portions of the system are not located within an area in proximity of components performing a safety-related function. Components that are not required to support the system's leakage boundary intended functions are not included in the scope of license renewal.

The Chilled Water System supports the primary containment boundary intended function. This portion of the system includes the chilled water supply and return penetrations, inboard and outboard containment isolation valves and interconnecting piping. The motor operated containment isolation valves are environmentally qualified and support the environmental qualification intended function.

Reason for Scope Determination

The Chilled Water System meets 10 CFR 54.4(a)(1) because portions of the system are safety-related that are relied upon to remain functional during and following design basis events. It meets 10 CFR 54.4(a)(2) because failure of nonsafety-related portions of the system could prevent satisfactory accomplishment of function(s) identified for 10 CFR 54.4(a)(1). It also meets 10 CFR 54.4(a)(3) because it is relied upon in the safety analyses or plant evaluations to perform a function that demonstrates compliance with the Commission's regulations for Environmental Qualification (10 CFR 50.49). The Chilled Water System is not relied upon in any safety analyses or plant evaluations to perform a function that demonstrates compliance with the Commission's regulations for Fire Protection (10 CFR 50.48), Anticipated Transient Without Scram (10 CFR 50.62) or Station Blackout (10 CFR 50.63).

System Intended Functions

1) Provide primary containment boundary. The Chilled Water System includes primary containment isolation valves that close on high drywell pressure, reactor low-low-low level or core spray initiation. 10 CFR 54.4(a)(1)

2) Resist nonsafety-related SSC failure that could prevent satisfactory accomplishment of a safety-related function. The Chilled Water System has piping and other components within the Auxiliary Building, Primary Containment, and Reactor Building that have the potential for spatial interaction (spray or leakage) with safety-related components. 10 CFR 54.4(a)(2)

3) Relied upon in safety analyses or plant evaluations to perform a function that demonstrates compliance with the Commission's regulations for Environmental Qualification (10 CFR 50.49). The system has components that are environmentally qualified. 10 CFR 54.4(a)(3)

UFSAR References

9.2.7

License Renewal Boundary Drawings

LR-M-23-1, Sheet 2
LR-M-43-1, Sheet 1
LR-M-61-1, Sheet 2
LR-M-83-1, Sheet 1
LR-M-84-1, Sheet 1
LR-M-87-1, Sheet 2
LR-M-87-1, Sheet 5

Table 2.3.3-1 Chilled Water System
Components Subject to Aging Management Review

Component Type	Intended Function
Bolting	Mechanical Closure
Flexible Connection	Leakage Boundary
Flow Device	Leakage Boundary
Flow Element	Leakage Boundary
Heat Exchanger Components (CRD Facility Unit Coolers)	Leakage Boundary
Heat Exchanger Components (DW Cooler)	Leakage Boundary
Heat Exchanger Components (Recirc Pump Motor Air Cooler)	Leakage Boundary
Heat Exchanger Components (Steam Tunnel Coolers)	Leakage Boundary
Piping and Fittings	Leakage Boundary
Piping and Fittings	Pressure Boundary
Pump Casing (CRD Facility Chilled Water Pump)	Leakage Boundary
Restricting Orifices	Leakage Boundary
Thermowell	Leakage Boundary
Valve Body	Leakage Boundary
Valve Body	Pressure Boundary

The aging management review results for these components are provided in:

Table 3.3.2-1 Chilled Water System
Summary of Aging Management Evaluation

2.3.3.2 Closed Cycle Cooling Water System

System Purpose

The Closed Cycle Cooling Water System is a normally operating closed-loop mechanical system designed to provide demineralized cooling water to various safety-related and nonsafety-related equipment within the plant. Included in the Closed Cycle Cooling Water System is chemical treatment equipment designed to minimize corrosion by maintaining demineralized water quality.

The Closed Cycle Cooling Water System is in scope for license renewal. However, portions of the Closed Cycle Cooling Water System are not required to perform intended functions and are not in scope. The Closed Cycle Cooling Water System has several interfaces with other systems that are not in the license renewal boundary of the Closed Cycle Cooling Water System.

The Closed Cycle Cooling Water System consists of the following two independent plant systems: safety and turbine auxiliary cooling plant system and reactor auxiliary cooling plant system.

Safety and Turbine Auxiliary Cooling System

The safety and turbine auxiliary cooling plant system is designed to provide a heat sink for engineered safety features equipment and turbine generator auxiliary equipment by circulating cooling water in a closed loop system. The safety and turbine auxiliary cooling plant system consists of two subsystems, the safety-related safety auxiliary cooling plant system and the nonsafety-related turbine auxiliary cooling plant system. Heat is rejected to the Service Water system through the safety auxiliary cooling system heat exchangers. The safety auxiliary cooling plant system heat exchangers are evaluated with the Service Water System. These heat exchangers, along with the chemical addition tanks, expansion tanks, demineralizers and circulating pumps, are part of the safety auxiliary cooling system. These components also service the turbine auxiliary cooling system, which is an independent loop designed to be isolated from the safety auxiliary cooling system during emergency conditions.

The purpose of the safety auxiliary cooling plant system is to remove heat from the following safety-related loads, located within the Reactor Building and Auxiliary Building, during various modes of reactor operation: Residual Heat Removal System (pumps, room unit coolers and heat exchangers), Standby Diesel Generators and Auxiliary Systems (emergency diesel generators and their room coolers), Fuel Pool Cooling and Cleanup System (heat exchangers), High Pressure Coolant Injection System (pump room unit coolers), Reactor Core Isolation Cooling System (pump room unit coolers), Core Spray System (pump room unit coolers), Reactor Building Ventilation System (filtration, recirculation, and ventilation system cooling coils and recirculation trains), Control Room and Control Area HVAC System (control room chillers, safety-related panel room chillers), Primary Containment Instrument Gas System (compressor coolers), and Process and Post-Accident Sampling System (coolers). Large portions of the safety auxiliary cooling plant system are required to perform intended functions and are in the scope of license renewal.

The purpose of the turbine auxiliary cooling plant system is to remove heat from the following nonsafety-related loads within the Turbine Building to meet the turbine generator auxiliary

cooling requirements during normal operation and normal shutdown conditions: service air compressors, secondary condensate pump motor bearing coolers, condenser compartment unit coolers, reactor feed pump turbine lube oil coolers, mezzanine pipe chase unit coolers, turbine building sample station coolers, turbine building chiller condensers and pump out unit coolers, recirculation motor generator set fluid coupler and lube oil coolers, main turbine lube oil coolers, electro-hydraulic control hydraulic fluid coolers, isophase bus duct coolers, generator stator coolers, alterrex air cooler, generator hydrogen coolers, and plant heating steam condensate coolers. The turbine auxiliary cooling plant system is located within the Turbine Building. The turbine auxiliary cooling plant system is not required to perform intended functions and is not in the scope of license renewal.

The safety and turbine auxiliary cooling plant system accomplishes its purposes by transferring heat from these loads to the Service Water System, through the safety auxiliary cooling plant system heat exchangers. Flow and temperature control is achieved through manual/remote manipulation of system valves.

Reactor Auxiliary Cooling Plant System

The purpose of the reactor auxiliary cooling plant system is to remove heat from the following non-essential (non-engineered safety feature) loads located in the Reactor Building, Auxiliary Building, Radwaste Building, and Turbine Building, that can carry radioactive fluids: Control Rod Drive System (pumps), Radwaste System (Reactor Building equipment drain coolers), Main Condenser Extraction System (feed gas cooler condensers), Chilled Water System (backup to drywell unit coolers; the reactor recirculation pump motor coolers, drywell equipment drain sump cooler, steam tunnel cooler), Process and Post-Accident Sampling System (coolers), and Compressed Air System (backup to the emergency instrument air after-cooler and moisture separator). The reactor auxiliary cooling plant system accomplishes its purpose by transferring heat from these loads to the Service Water System, through the reactor auxiliary cooling plant system heat exchangers. Flow and temperature control is achieved through both local and remote manipulation of system valves. A portion of the reactor auxiliary cooling plant system containing the primary containment isolation valves is safety-related and supports the primary containment boundary intended function.

System Operation

Safety and Turbine Auxiliary Cooling Plant System

The safety auxiliary cooling plant system is comprised of two full capacity redundant closed loops with a potential to cross-connect the two loops. Each safety auxiliary cooling plant system loop is comprised of two one-half capacity pumps, two one-half capacity heat exchangers, chemical addition tank, expansion tank, demineralizer, accumulator, and associated controls and support equipment. The pumps in each safety auxiliary cooling plant system loop discharge into a common supply header. Coolant from this supply header is distributed to the components cooled by each safety auxiliary cooling plant system loop. After passing through the equipment being cooled, the water flows back through the return header and through the shell side of the safety auxiliary cooling plant heat exchangers to the suction of the circulating pumps. The safety auxiliary cooling plant system heat exchangers are cooled by the Service Water System.

Each loop is equipped with an expansion tank located at the high point of the system and is sized to accommodate expansion and contraction of system water volume due to temperature

variations. Makeup to the expansion tank from the Makeup Demineralizer System can be added manually or by an automatic level control valve. Makeup flow rate is monitored and recorded to provide an indication of system leakage. The Service Water System can provide emergency makeup to the safety auxiliary cooling plant system through the discharge line of the expansion tank.

The chemical treatment equipment includes a chemical addition tank installed on each loop of the safety auxiliary cooling plant system. Each tank has an inlet to allow the addition of required chemicals, which can then be injected into the system. However, the chemical addition tanks currently are not being used to inject chemicals into the system. The safety and turbine auxiliary cooling plant system includes two filter demineralizers in the safety auxiliary cooling system and two filter demineralizers in the turbine auxiliary cooling system.

Each safety auxiliary cooling plant system loop is provided with a hydro-pneumatic accumulator in the supply and return headers from the safety auxiliary cooling plant system to the turbine auxiliary cooling plant system, to protect the safety auxiliary cooling plant system piping from being over-pressurized due to a pressure transient resulting from a pipe break in the turbine auxiliary cooling plant system loop.

The turbine auxiliary cooling plant system will automatically isolate from the safety auxiliary cooling plant system whenever there is indication of a pipe break in either system, as determined by decreasing water level in the two expansion tanks. On low level in only one expansion tank, the turbine auxiliary cooling plant system will remain in service but the safety auxiliary cooling plant system will automatically swap over to the loop that is not affected.

During normal plant conditions one safety auxiliary cooling plant system loop, with both pumps in service, is operating while the other loop is in automatic standby. Under loss-of-coolant-accident conditions or loss-of-offsite-power conditions the safety auxiliary cooling plant system heat removal capability is increased by starting the standby pumps and opening the associated heat exchanger inlet valves. The non-essential loads will be isolated. Start of any safety auxiliary coolant plant system pump will result in opening of its associated heat exchanger inlet valves. Also, any safety auxiliary cooling plant system pump stop will result in closure of the respective safety auxiliary cooling/turbine auxiliary cooling loop supply and return isolation valves.

The turbine auxiliary cooling plant system performs a nonsafety-related function. The turbine auxiliary cooling plant system loads are supplied by the safety auxiliary cooling plant system loop flow through a single supply header, after going through a hydro-pneumatic accumulator. The turbine auxiliary cooling system includes two demineralizers which provide an alternate method of corrosion prevention within the safety and turbine auxiliary cooling system. The turbine auxiliary cooling plant system isolation valves close and the system isolates upon initiation of any of the following conditions: loss-of-offsite power, loss-of-coolant-accident, or low level in both of the safety auxiliary cooling plant system expansion tanks. Additionally, the safety auxiliary cooling plant system/turbine auxiliary cooling plant system supply isolation valves will automatically close upon either a trip of the respective safety auxiliary cooling plant system pump or a low level in their associated expansion tank on the safety auxiliary cooling plant system loop. This signal can be overridden to allow continuation of turbine auxiliary cooling plant system operation.

Reactor Auxiliary Cooling Plant System

The reactor auxiliary cooling plant system is a closed cooling water system comprised of three parallel one-half capacity cooling water pumps, two parallel one-half capacity heat exchangers, a heat exchanger bypass flow control valve, one expansion tank, one chemical addition tank, two demineralizers, and associated valves, piping, controls and support equipment.

Discharge from the reactor auxiliary cooling plant system pumps merge into a common header. Coolant from this common header is then distributed to the components cooled by the reactor auxiliary cooling plant system. After passing through the equipment being cooled, the water flows back through the return header and through the shell side of the reactor auxiliary cooling plant heat exchangers to the suction of the circulating pumps. The reactor auxiliary cooling plant system heat exchangers are cooled by the Service Water System.

The reactor auxiliary cooling plant system head tank (or expansion tank) taps into the system on the common pump suction header. The head tank is located at a high point of the system and is sized to accommodate expansion and contraction of system water volume due to temperature variations. Makeup to the expansion tank from the Makeup Demineralizer System can be added manually or by an automatic level control valve.

The reactor auxiliary cooling plant system chemical treatment tank has an inlet to allow the addition of required chemicals, which can then be injected into the system. The reactor auxiliary cooling plant system chemical addition tank is not being used to inject chemicals in to the system. A preferred alternate method of reactor auxiliary cooling plant system water treatment has been established to eliminate the need for removing chemicals from the system prior to maintenance activities. This alternate water treatment system is comprised of two demineralizers tied into the reactor auxiliary cooling plant system lines supplying the emergency instrument air compressors. The demineralizers and one skid rack with instrumentation and controls, located in the Turbine Building, maintain low conductivity water in the reactor auxiliary cooling plant system, providing an acceptable means of corrosion control.

The system is normally operated with two of the three circulating pumps and both heat exchangers in service. A bypass line around the heat exchangers is equipped with a thermostatically controlled valve, which is used to control the reactor auxiliary cooling plant system supply temperature. A tap off the common pump discharge header directs a stream of reactor auxiliary cooling plant system water to the radiation monitoring system to detect inleakage of any contaminates which could foul the station Service Water System.

The reactor auxiliary cooling plant system has no safety-related function (other than for containment isolation) and is not required to operate following a loss-of-coolant-accident. Upon a loss-of-coolant-accident signal, the reactor auxiliary cooling plant system heat exchangers are automatically isolated from the balance of the Service Water System and two of the reactor auxiliary cooling plant system pumps (A and B), which are connected to safety-related buses, are tripped. An operating reactor auxiliary cooling plant system pump (C), which is not connected to a safety-related bus, will continue to operate. Upon a loss-of-offsite-power event all reactor auxiliary cooling plant system pumps trip, but the two reactor auxiliary cooling plant system pumps that are powered from the safety-related buses restart automatically. Also, upon initiation of either loss-of-offsite-power or loss-of-coolant-accident, the reactor building isolation valves located within the reactor auxiliary cooling plant system

will automatically isolate. Upon initiation of a loss-of-coolant-accident, all reactor auxiliary cooling plant system isolation valves will automatically close. The systems that require reactor auxiliary cooling during a loss-of-offsite-power event are: reactor recirculation pump seal coolers, reactor recirculation pump motor oil cooler, control rod drive pump thrust bearing and gear box oil coolers, emergency instrument air compressor heat exchangers and reactor water cleanup pump coolers. The reactor auxiliary cooling plant system has connections to supply cooling water to the drywell coolers as a backup to the Chilled Water System. This backup is automatic following a loss-of-offsite-power without a loss-of-coolant-accident.

For additional information, see UFSAR Section 9.2.2 and 9.2.8.

System Boundary

Safety and Turbine Auxiliary Cooling Plant System

The safety auxiliary cooling plant system boundary begins at the discharge of the safety auxiliary cooling plant system circulating pumps and continues through all the cooled loads (residual heat removal pump seal coolers, residual heat removal pump bearing coolers, residual heat removal heat exchangers, supply side accumulator, residual heat removal pump room coolers, filtration, recirculation and ventilation system cooling coils, containment instrument gas compressor coolers, fuel pool heat exchangers, core spray pump room unit coolers, high pressure coolant injection pump room unit coolers, reactor core isolation cooling pump room unit coolers, emergency diesel generator room coolers, emergency diesel generator intercoolers, emergency diesel generator jacket water heat exchangers, emergency diesel generator lube oil heat exchangers, control room chillers, 1E panel room chillers, radiological monitoring sample loops, and the turbine auxiliary cooling plant system loads through the supply and return side accumulators). The boundary continues through the return header from the cooled loads, through the shell side of the safety auxiliary cooling plant system heat exchangers and terminates at the suction of the circulating pumps. Also included in the boundary of the safety auxiliary cooling plant system is the expansion tank, the accumulators, the demineralizers and associated piping, valves and instrumentation. Additionally, included in the system boundary is the portion of safety auxiliary cooling plant system piping that provides input to the Leak Detection and Radiation Monitoring System.

The turbine auxiliary cooling plant system boundary begins at the safety auxiliary cooling plant system pumps combined discharge header at the entrance to the Turbine Building and continues through all the cooled loads within the Turbine Building (station air compressors, main turbine lube oil coolers, EHC hydraulic fluid coolers, generator stator coolers, generator hydrogen coolers, reactor recirculation pump M-G set coolers, reactor feed pump turbine lube oil coolers, iso-phase bus coolers, alterrex air cooler, process sampling coolers, mezzanine pipe chase coolers, condenser compartment coolers, turbine building chillers, secondary condensate pump motor bearing coolers, and plant heating system condenser coolers). The boundary continues from the cooled loads through the return header and terminates at the entrance to the Auxiliary Building.

All associated piping, components, and instrumentation contained within the flowpath described above are also included in the safety and turbine auxiliary cooling plant system boundary.

Reactor Auxiliary Cooling Plant System

The reactor auxiliary cooling plant system boundary begins at the reactor auxiliary cooling plant system circulating pumps discharge and continues through all the cooled loads (reactor water cleanup system pumps seal coolers, reactor water cleanup non-regenerative heat exchangers, reactor recirculation pump seal coolers, reactor recirculation pump motor oil coolers, control rod drive pump seal coolers, reactor building equipment drain sump coolers, off-gas recombiner feed gas cooler condensers, reactor building sampling station cooler, emergency instrument air compressor, breathing air compressor, and off-gas system refrigeration machine, off-gas system charcoal compartment refrigeration). The boundary continues through the return header from the cooled loads, through the shell side of the reactor auxiliary cooling plant system heat exchangers and terminates at the suction of the circulating pumps. Included in the boundary of the reactor auxiliary cooling plant system is the heat exchanger bypass line, the expansion tank, the chemical addition tank and the demineralizers. Also included in the reactor auxiliary cooling plant system boundary is the piping, components, and instrumentation contained within the flowpath described above. Additionally, included in the system boundary is the portion of reactor auxiliary cooling plant system piping that provides input to the Leak Detection and Radiation Monitoring System.

Included in the license renewal boundary of the Closed Cycle Cooling Water System are those portions of nonsafety-related piping and equipment that extend beyond the safety-related/nonsafety-related interface up to the location of the first seismic anchor, or to a point no longer in proximity to equipment performing a safety-related function, whichever extends furthest. This includes the nonsafety-related portions of the system located within the Reactor Building and Auxiliary Building. Included in this boundary are the pressure retaining components relied upon to preserve the leakage boundary intended function of this portion of the system. For more information, refer to the license renewal boundary drawing for identification of this boundary, shown in red.

Not included in the scope of license renewal is the portion of the Closed Cycle Cooling Water System located within the Turbine Building, as these portions of the system are not located within an area in proximity to components performing a safety-related function. Also, not included in the scope of license renewal are the reactor building equipment drain sump coolers and the reactor recirculation pump motor oil coolers and seal coolers, as these components are physically enclosed and do not have the potential for spatial interaction with components performing a safety related function.

Not included in the Closed Cycle Cooling Water System license renewal scoping boundaries are the following interfacing systems, which are separately evaluated as license renewal system:

Auxiliary Steam System
Chilled Water System
Compressed Air System
Condensate System
Control Rod Drive System
Control Room and Control Area HVAC System
Core Spray System
Equipment and Floor Drainage System
Feedwater System
Filtration, Recirculation and Ventilation System

Fuel Pool Cooling and Cleanup System
High Pressure Coolant Injection System
Leak Detection and Radiation Monitoring System
Main Condenser Extraction System
Makeup Demineralizer System
Primary Containment Instrument Gas System
Process and Post-Accident Sampling System
Radwaste System
Reactor Building Ventilation System
Reactor Core Isolation Cooling System
Residual Heat Removal System
Reactor Recirculation System
Reactor Water Cleanup System
Service Water System
Standby Diesel Generators and Auxiliary System

Reason for Scope Determination

The Closed Cycle Cooling Water System meets 10 CFR 54.4(a)(1) because portions of the system are safety-related that are relied upon to remain functional during and following design basis events. It meets 10 CFR 54.4(a)(2) because failure of nonsafety-related portions of the system could prevent satisfactory accomplishment of function(s) identified for 10 CFR 54.4(a)(1). It also meets 10 CFR 54.4(a)(3) because it is relied upon in safety analyses or plant evaluations to perform a function that demonstrates compliance with the Commission's regulations for Environmental Qualification (10 CFR 50.49), Fire Protection (10 CFR 50.48), and Station Blackout (10 CFR 50.63). The Closed Cycle Cooling Water System is not relied upon in any safety analyses or plant evaluations to perform a function that demonstrates compliance with the Commission's regulation for Anticipated Transient Without Scram (10 CFR 50.62).

System Intended Functions

1. Provide heat removal from safety related heat exchangers. The safety auxiliary cooling plant system portion of the Closed Cycle Cooling Water System removes heat from safety related systems and heat exchangers, such as fuel pool heat exchangers, and residual heat removal heat exchangers. 10 CFR 54.4(a)(1)

2. Provide primary containment boundary. The reactor auxiliary cooling plant system portion of the Closed Cycle Cooling Water System includes primary containment isolation valves that close on high drywell pressure, or reactor low-low-low level. 10 CFR 54.4(a)(1)

3. Resist nonsafety-related SSC failure that could prevent satisfactory accomplishment of a safety-related function. The Closed Cycle Cooling Water System includes nonsafety-related piping and components within the Reactor Building, Auxiliary Building, and Primary Containment that have the potential for spatial interaction (spray or leakage) with safety-related components. 10 CFR 54.4(a)(2)

4. Relied upon in safety analyses or plant evaluations to perform a function that demonstrates compliance with the Commission's regulations for Environmental Qualification (10 CFR 50.49). The system has components that are Environmentally Qualified. 10 CFR 54.4(a)(3)

5. Relied upon in safety analyses or plant evaluations to perform a function that demonstrates compliance with the Commission's regulations for Fire Protection (10 CFR 50.48). The system has components that are relied upon to meet the fire protection requirements. 10 CFR 54.4(a)(3)

6. Relied upon in safety analyses or plant evaluations to perform a function that demonstrates compliance with the Commission's regulations for Station Blackout (10 CFR 50.63). The system has components that support systems needed for recovery after the station blackout is cleared. 10 CFR 54.4(a)(3)

UFSAR References

9.2.2
9.2.8

License Renewal Boundary Drawings

LR-M-10-1, Sheet 2
LR-M-11-1, Sheet 1
LR-M-11-1, Sheet 2
LR-M-11-1, Sheet 3
LR-M-11-1, Sheet 4
LR-M-12-1, Sheet 1
LR-M-12-1, Sheet 2
LR-M-13-1, Sheet 1
LR-M-23-1, Sheet 2
LR-M-30-1, Sheet 1
LR-M-30-1, Sheet 2
LR-M-30-1, Sheet 3
LR-M-38-0, Sheet 1
LR-M-43-1, Sheet 1
LR-M-44-1, Sheet 1
LR-M-46-1, Sheet 1
LR-M-53-1, Sheet 1
LR-M-59-1, Sheet 1
LR-M-61-1, Sheet 2
LR-M-83-1, Sheet 1
LR-M-87-1, Sheet 2
LR-M-88-1, Sheet 1
LR-M-90-1, Sheet 1
LR-M-90-1, Sheet 2
LR-M-90-1, Sheet 3

Table 2.3.3-2 Closed Cycle Cooling Water System Components Subject to Aging Management Review

Component Type	Intended Function
Bolting	Mechanical Closure
Filter Housing	Leakage Boundary
Flow Device	Leakage Boundary
Flow Element	Leakage Boundary
Flow Element	Pressure Boundary
Heat Exchanger Components (1E Panel Room Chillers - Condensers)	Heat Transfer
Heat Exchanger Components (1E Panel Room Chillers - Condensers)	Pressure Boundary
Heat Exchanger Components (CRD Pump Cooler)	Leakage Boundary
Heat Exchanger Components (CS Pump Room Coolers)	Heat Transfer
Heat Exchanger Components (CS Pump Room Coolers)	Pressure Boundary
Heat Exchanger Components (Control Room Chillers - Condenser)	Heat Transfer
Heat Exchanger Components (Control Room Chillers - Condenser)	Pressure Boundary
Heat Exchanger Components (DG Intercoolers and Injectors)	Heat Transfer
Heat Exchanger Components (DG Intercoolers and Injectors)	Pressure Boundary
Heat Exchanger Components (DG Jacket Water)	Heat Transfer
Heat Exchanger Components (DG Jacket Water)	Pressure Boundary
Heat Exchanger Components (DG Lube Oil)	Heat Transfer
Heat Exchanger Components (DG Lube Oil)	Pressure Boundary
Heat Exchanger Components (DG Room Coolers)	Heat Transfer
Heat Exchanger Components (DG Room Coolers)	Pressure Boundary
Heat Exchanger Components (FRVS Cooling Coils)	Heat Transfer
Heat Exchanger Components (FRVS Cooling Coils)	Pressure Boundary

Component Type	Intended Function
Heat Exchanger Components (Fuel Pool Cooling)	Heat Transfer
Heat Exchanger Components (Fuel Pool Cooling)	Pressure Boundary
Heat Exchanger Components (Fuel Pool Cooling)	Structural Support
Heat Exchanger Components (HPCI Pump Room Cooler)	Heat Transfer
Heat Exchanger Components (HPCI Pump Room Cooler)	Pressure Boundary
Heat Exchanger Components (PCIG Compressor Inter & After coolers)	Heat Transfer
Heat Exchanger Components (PCIG Compressor Inter & After coolers)	Pressure Boundary
Heat Exchanger Components (RACS)	Leakage Boundary
Heat Exchanger Components (RCIC Pump Room Coolers)	Heat Transfer
Heat Exchanger Components (RCIC Pump Room Coolers)	Pressure Boundary
Heat Exchanger Components (RHR Pump Motor Bearing Cooler)	Heat Transfer
Heat Exchanger Components (RHR Pump Motor Bearing Cooler)	Pressure Boundary
Heat Exchanger Components (RHR Pump Room Coolers)	Heat Transfer
Heat Exchanger Components (RHR Pump Room Coolers)	Pressure Boundary
Heat Exchanger Components (RHR Pump Seal Cooler)	Heat Transfer
Heat Exchanger Components (RHR Pump Seal Cooler)	Pressure Boundary
Heat Exchanger Components (RHR)	Heat Transfer
Heat Exchanger Components (RHR)	Pressure Boundary
Heat Exchanger Components (RWCU Non-Regen)	Leakage Boundary
Heat Exchanger Components (RWCU Pedestal)	Leakage Boundary
Heat Exchanger Components (RWCU Pump HX)	Leakage Boundary
Heat Exchanger Components (SACS)	Evaluated with the Service Water System

Component Type	Intended Function
Heat Exchanger Components (Thermo-siphon)	Heat Transfer
Heat Exchanger Components (Thermo-siphon)	Pressure Boundary
Piping and Fittings	Leakage Boundary
Piping and Fittings	Pressure Boundary
Piping and Fittings	Structural Support
Pump Casing (RACS)	Leakage Boundary
Pump Casing (SACS)	Pressure Boundary
Restricting Orifices	Pressure Boundary
Restricting Orifices	Throttle
Sensor Element	Leakage Boundary
Sensor Element	Pressure Boundary
Strainer Body	Leakage Boundary
Tanks (RACS Chemical Addition)	Leakage Boundary
Tanks (RACS Head Tank)	Leakage Boundary
Tanks (SACS Chemical Addition)	Leakage Boundary
Tanks (SACS Demineralizers)	Leakage Boundary
Tanks (SACS Expansion)	Pressure Boundary
Tanks (Supply/Return Side Accumulator, Integral Attachments)	Pressure Boundary
Thermowell	Leakage Boundary
Thermowell	Pressure Boundary
Valve Body	Leakage Boundary
Valve Body	Pressure Boundary

The aging management review results for these components are provided in:

Table 3.3.2-2 Closed Cycle Cooling Water System
Summary of Aging Management Evaluation

2.3.3.3 Compressed Air System

System Purpose

The Compressed Air System is a normally operating system designed to provide clean and dry compressed air in support of plant operation.

The Compressed Air System is in scope for license renewal. However, major portions of the system are not required to perform license renewal intended functions and are not in scope. The Compressed Air System has several interfaces with other systems that are not in the license renewal boundary of the Compressed Air System.

The Compressed Air System consists of the following plant systems: the service/instrument air plant system and the breathing air plant system. The breathing air plant system is no longer in use but is described and evaluated because portions of the system still exists in the plant.

The purpose of the service/instrument air plant system is to provide clean and dry compressed air to pneumatically operated instruments and valves. To accomplish this purpose, this system takes air from outside of the Turbine Building, and processes the air through air compressors, intercooler/aftercoolers/moisture separator, air receivers, and air dryers for distribution to components in support of plant operation. The purpose of the breathing air plant system was to provide compressed air for plant personnel during maintenance for respiratory supply and pneumatic tools, however this system was abandoned in place and is no longer used.

System Operation

Service/Instrument Air Plant System

The service/instrument air plant system is comprised primarily of piping, valves, compressors, intercoolers/ aftercoolers/moisture separator, air receivers, accumulators, regulators, tubing, air dryers and filters. It begins at the air intake filter/silencer to the compressors and terminates at the attachment points to the host pneumatic components which are the supplied pneumatic instruments, air operated valves and other air operator components. There are two air compressors and one emergency instrument air compressor that process the air for both the service and instrument air loads.

Compressed air from the service air plant system is supplied through a single header with one service air receiver common to both service air compressors, all located in the Turbine Building. Each of the two full capacity service air compressors has an air intake filter/silencer, an intercooler and an aftercooler. The service air compressors provide compressed air to the service air system receiver. Compressed air from the service air plant system receiver charges the instrument air supply line and is sent to the instrument air plant system dryers and filters. In addition, an emergency instrument air compressor unit also provides compressed air to the instrument air plant system dryers and filters prior to distribution as processed compressed air.

The compressed air passes through three full capacity instrument air dryer packages that are provided in the instrument air system before distribution as processed compressed air. Each dryer package consists of a prefilter, heatless desiccant type dryer, and an afterfilter. The

dryers and filters are located in the Turbine Building. Two air receivers for the instrument air are also provided downstream of the dryers. The dryer and filter charge lines then charge the two instrument air supply headers. Manual shutoff valves are provided in the headers and at the connections of smaller headers/taps from which instrument air is supplied to the plant pneumatic components. Two headers supply the Reactor Building instrument air. One supplies the outboard Main Steam Isolation Valves (MSIVs) in the outboard MSIV room. The other supplies the Reactor Building loads and provides a connection to the drywell. The Auxiliary Building, Turbine Building, Auxiliary Boiler and other miscellaneous areas are also provided with compressed air.

During normal plant operation, the service air compressors operate continuously to supply service and instrument air needed to support plant operations. The service air compressors keep all the service and instrument air receivers charged with compressed air. The instrument and service air receivers supply the individual pneumatic components throughout the plant. Instrument air is required for normal plant operation that includes certain important functions such as maintaining the control rod scram valves closed. Upon loss of air, the scram valves will open, causing the control rods to insert and shut down the reactor. Where required, pneumatically operated components are designed to fail safe upon loss of air or are provided with safety-related accumulators to provide a stored volume of compressed air when the compressors or other nonsafety-related sections of the instrument air system are unavailable. Accumulators are isolated by safety-related check valves to ensure backup air for components credited to function during or following design basis events.

Instrument air is required for normal control room chiller operation by maintaining the control valve to the chiller open. Upon loss of air due to the failure of nonsafety-related sections of the instrument air system, the required air can be provided with safety-related nitrogen/air cylinders and associated safety-related piping and valves which are evaluated with the Compressed Air System.

Service air is required to support the fuel pool cooling intended function by inflating the gate seals to provide a watertight seal. These gate seals are located at the interfaces of the reactor well to fuel pool, the cask pit to fuel pool, and the reactor well to dryer-separator pool. A rack of compressed air cylinders is installed in the Reactor Building to provide back-up air supply to these seals. The compressed air cylinders tie into the service air piping upstream of each of the seal supply regulator valves. All associating piping, components and instrumentation contained within the flow path as described are evaluated with the Compressed Air System.

Other important design features in the service/instrument air plant systems include the service air penetration (P27) for the drywell and the instrument air supply to the equipment hatch (C2) at the drywell boundary. The service air drywell penetration, although not in use during power operation, has piping that penetrates the drywell and performs the primary containment boundary intended function. This penetration is isolated during normal operation by two safety-related manual isolation valves. One locked closed valve is inside the drywell and the other locked closed valve is outside the drywell. Similarly, the instrument air supply piping to the equipment hatch also performs a primary containment boundary intended function. This supply piping to the equipment hatch located at the drywell boundary (C2) is provided by the instrument air plant system and is isolated during normal operation by a locked closed manual isolation valve. Drywell penetration P27 and equipment hatch C2 will be evaluated as part of the Primary Containment license renewal structure. The piping and isolation valves associated with penetration P27 and equipment hatch C2 will be evaluated as part of the Compressed Air license renewal system.

The following components of the service/instrument plant system are not required to function for safe shutdown of the plant and do not have any license renewal intended function: the air intake filter/silencer, service air compressors, intercoolers/aftercoolers/moisture separator, air receivers, dryers, filters, headers, valves and piping up to the attachment points to the safety related valves for the Main Steam System and drywell penetration/equipment hatch. These components do not perform any intended functions and are not included in the scope of license renewal. These components are not safety-related, do not have the ability to affect safety related SSCs and provide no function for safe shutdown of the plant.

Breathing Air Plant System

The breathing air plant system was designed to provide compressed air to plant personnel, however, this system was abandoned in place and is no longer used. The breathing air system, however, includes a line that penetrates the drywell. This line is isolated during reactor operation by two manual normally closed gate valves, one inside and one outside primary containment. In addition to these two isolation valves, this line is blocked off by spectacle flanges during plant operation.

The breathing air plant system is not required to operate to support a license renewal intended function, but is included within the scope of license renewal because this plant system includes piping that penetrates the drywell at penetration 31 and performs a primary containment boundary intended function. Penetration 31 will be assessed as part of the Primary Containment license renewal structure. The manual valve inside and outside of primary containment, the spectacle flange and line that penetrates containment will be evaluated as part of this Compressed Air license renewal system.

For more detailed information, see UFSAR Section 9.3.1.

System Boundary

The license renewal scoping boundary of the Compressed Air System consists of the service/instrument and breathing air plant systems, as follows:

Service/Instrument Air Plant System

This plant system begins at the air intake filter/silencer for the service air compressors and continues through the instrument air dryers and filters that discharge into the Turbine Building air headers. The system boundary also includes piping downstream of the instrument air dryers, main instrument air header, instrument air receivers, connections of smaller headers, manual shutoff valves, pressure reducing valves, check valves, accumulators and all associated piping components and instrumentation. The system boundary terminates at the attachment points to the host pneumatic components.

Not included in the Compressed Air System scoping boundary are the host pneumatic components which are pneumatic instrumentation, air operated valves and other components supplied by the Compressed Air System in systems such as: Main Steam, Containment Inerting and Purging, Reactor Building Ventilation, Condensate Storage and Transfer Systems and Closed Cycle Cooling Water System. The host pneumatic components are separately evaluated in their associated license renewal systems.

Not included in the scope of license renewal is the portion of the service/instrument air plant system from the air intake filter/silencer, air compressors, intercoolers/ aftercoolers/moisture separator, air receiver, dryers, filters, headers, valves and branch piping up to the attachment points to the safety-related check valves of the Main Steam System or to the locked closed manual isolation valves associated with the drywell penetration and equipment hatch. This portion is not required to support license renewal intended functions and is not included within the scope of license renewal. The loss of this portion will not compromise the ability of any safety-related system or component to mitigate the consequences of an accident or event as defined in 10 CFR 54.4(a).

Not included in the scope of license renewal is the portion of the service/instrument air plant system that provides compressed air to various nonsafety-related users, including local nonsafety-related nitrogen storage cylinders installed to allow operation of nonsafety-related pneumatic component when the Compressed Air system is not available.

The service/instrument air plant system supports the intended function of providing motive power to safety-related components requiring air for operation by providing compressed air from safety-related accumulators or safety-related nitrogen/air cylinders. Thus, those portions of the system that are in the scope of license renewal start at the safety-related isolation check valves upstream of the individual safety-related accumulator that supplies the in-line solenoid valves and ends at the attachment point to the safety-related valve actuators in the Main Steam System.

Similarly, a portion of the Compressed Air System boundary includes the piping that supports the Closed Cycle Cooling Water System. The portion that is in the scope of license renewal starts at the safety-related check valve, which is upstream of the safety-related nitrogen/air cylinders that supply the pressure regulator valves, and ends at the safety-related isolation valves of the control room chillers. Additionally the drywell penetration P27, equipment hatch C2 and associated safety-related supply line piping and safety-related isolation valves are in the scope of license renewal for their containment boundary intended function.

Service air is required to support the fuel pool cooling intended function by inflating the gate seals to provide a watertight seal. These gate seals are located at the interfaces of the reactor well to fuel pool, the cask pit to fuel pool, and the reactor well to dryer-separator pool. This portion of the system boundary begins at the service air supply line and continues through the branch connection point for the back-up compressed air cylinders, service air supply station, check valves, gate seal regulator valve, pressure relief valve, and then ends at the gate seals. All associating piping, components and instrumentation contained within the flow path as described are in the scope of the Compressed Air license renewal system. The boundary excludes the gate seals, which are evaluated with the Reactor Building Structure for license renewal.

Breathing Air Plant System

The breathing air plant system begins at the air intake to the breathing air compressor. The system boundary includes the air dryer, air receiver and filters that discharge into the Turbine Building air header. The system boundary terminates at the plant connections for the compressed air in Reactor Building, Turbine Building and Auxiliary Building. This plant system is abandoned in place and no longer used.

Not included in the scope of license renewal is the major portion of the system, which is abandoned in place and no longer used to provide compressed air to the plant. This portion of the system does not perform any license renewal intended function and is therefore not in the scope of license renewal.

The breathing air plant system does, however, support the intended function of primary containment boundary. The only portion of the breathing air plant system that supports an intended function and is in the scope of license renewal is the line that penetrates the drywell at drywell penetration P31. This portion of the plant system includes the manual valves, spectacle flange and piping line that penetrate the containment.

For the Compressed Air System, also included in the license renewal scoping boundary are those portions of nonsafety-related piping and equipment that extend beyond the safety-related/nonsafety-related interface up to the location of the first seismic anchor. Included in this boundary are components relied upon to preserve the structural support intended function of this portion of the system. For more information, refer to the license renewal boundary drawing for identification of this boundary, shown in red.

Not included in the scoping boundary of the Compressed Air System are items such as drywell penetration and equipment hatch which are separately evaluated with the Primary Containment structure for license renewal.

Not included in the Compressed Air System license renewal scoping boundary is the following interfacing system, which is separately evaluated as a license renewal system:

Closed Cycle Cooling Water System

Reason for Scope Determination

The Compressed Air System meets 10 CFR 54.4(a)(1) because it is a safety-related system that is relied upon to remain functional during and following design basis events. It meets 10 CFR 54.4(a)(2) because failure of nonsafety-related portions of the system could prevent satisfactory accomplishment of function(s) identified for 10 CFR 54.4(a)(1). It also meets 10 CFR 54.4(a)(3) because it is relied upon in safety analyses or plant evaluations to perform a function that demonstrates compliance with the Commission's regulation for Environmental Qualification (10 CFR 50.49). The Compressed Air System is not relied upon in any safety analyses or plant evaluations to perform a function that demonstrates compliance with the Commission's regulation for Fire Protection (10 CFR 50.48), Anticipated Transient Without Scram (10 CFR 50.62) or Station Blackout (10 CFR 50.63).

System Intended Functions

1. Provide primary containment boundary. Supply lines penetrating primary containment are provided with isolation valves. 10 CFR 54.4(a)(1)

2. Provide motive power to safety-related components. Safety-related accumulators are connected to air operated pneumatic components. 10 CFR 54.4(a)(1)

3. Resist nonsafety-related SSC failure that could prevent satisfactory accomplishment of a safety-related function. This includes nonsafety-related piping and components credited to provide compressed air to the Fuel Pool and Reactor Well gate seals. This also includes

components relied upon to preserve the structural support intended function associated with safety-related/nonsafety-related interfaces. 10 CFR 54.4(a)(2)

4. Relied upon in safety analyses or plant evaluations to perform a function that demonstrates compliance with the Commission's regulations for Environmental Qualification (10 CFR 50.49). The Compressed Air System includes components that are in the Environmental Qualification Program. 10 CFR 54.4(a)(3)

UFSAR References

9.3.1

License Renewal Boundary Drawings

LR-M-11-1, Sheet 4
LR-M-12-1, Sheet 2
LR-M-15-0, Sheet 4
LR-M-15-1, Sheet 1
LR-M-41-1, Sheet 1
LR-M-53-1, Sheet 2

Table 2.3.3-3 Compressed Air System
Components Subject to Aging Management Review

Component Type	Intended Function
Accumulator	Pressure Boundary
Bolting	Mechanical Closure
Hoses	Pressure Boundary
Piping and Fittings	Pressure Boundary
Piping and Fittings	Structural Support
Valve Body	Pressure Boundary
Valve Body	Structural Support

The aging management review results for these components are provided in:

Table 3.3.2-3 Compressed Air System
Summary of Aging Management Evaluation

2.3.3.4 Containment Inerting and Purging System

System Purpose

The Containment Inerting and Purging System is a license renewal system that is part of the containment atmosphere plant system. The Containment Inerting and Purging System is a pressurized gas system designed to maintain an inert atmosphere within the primary containment during plant operations to preclude energy releases from a possible hydrogen-oxygen reaction following a postulated loss-of-coolant-accident. The inert environment also precludes the possibility of an exposure fire within the primary containment. The Containment Inerting and Purging System is only credited during normal operation to inert the drywell. This system is not credited to provide makeup during a design basis event.

The purpose of the Containment Inerting and Purging System is to provide a means of reducing the oxygen concentration in the containment for normal power operations and a means of reestablishing oxygen concentration to normal life supporting levels to allow access to the primary containment. To ready the primary containment for power operation, the Containment Inerting and Purging System accomplishes the purpose of inerting by introducing nitrogen from the liquid nitrogen vaporizer to displace the oxygen from the free volume in the primary containment. The Containment Inerting and Purging System depends on the Drywell Air Cooling System to provide effective containment atmosphere mixing, since the Containment Inerting and Purging System does not have any fans. Also, the Containment Inerting and Purging System depends on the torus to drywell portion of the Vacuum Relief Valve System for effective mixing of the torus atmosphere. Liquid nitrogen is provided to the nitrogen vaporizer from the liquid nitrogen storage tank in the Main Condenser Air Extraction System.

To ready the primary containment for shutdown, the Containment Inerting and Purging System accomplishes the purpose of purging or de-inerting through interfacing with the containment prepurge cleanup system portion of the Reactor Building Ventilation System. The valves on the containment prepurge cleanup system supply and return lines to and from the drywell and torus are opened and the containment prepurge fan is started to initiate purging.

The Containment Inerting and Purging System is started manually.

System Operation

The Containment Inerting and Purging System is comprised of a liquid nitrogen vaporizer system located in the Auxiliary Building that consists of a nitrogen vaporizer, a flow control valve, and system flow, pressure and temperature instruments, and a nitrogen supply header that provides nitrogen to the rest of the system through two headers located in the Reactor Building. The liquid nitrogen vaporizer system portion of the Containment Inerting and Purging System receives liquid nitrogen from the nitrogen storage portion of the Main Condenser Air Extraction System located outside the building. The portion of the Containment Inerting and Purging System located in the Auxiliary Building is not in scope, as this portion does not serve any intended function.

Within the Reactor Building the Containment Inerting and Purging System is comprised of a one inch header and a six inch header, arranged in parallel, both originating downstream of a nitrogen supply header isolation valve in the Reactor Building. The six inch header, or the

nitrogen supply header, is used for primary containment inerting during plant startup. The one-inch header, or the makeup header, is used for nitrogen makeup to the primary containment during plant operation.

Additionally, within the Reactor Building the Containment Inerting and Purging System includes a containment prepurge cleanup system supply and return header to and from both torus and drywell. Each containment prepurge cleanup system supply and return header is comprised of an air operated primary containment inboard and outboard isolation valve. However, the containment prepurge cleanup system return header from the drywell includes an additional air operated containment isolation bypass valve on the primary containment vent path to the containment prepurge cleanup system.

The nitrogen supply header is comprised of a nitrogen flow control valve, a nitrogen supply header isolation valve, and system flow, pressure, and temperature instruments. The nitrogen makeup header is comprised of a nitrogen makeup supply isolation valve, and system flow, pressure, and temperature instruments. The nitrogen supply header provides nitrogen to the drywell and torus through a connection point in between the inboard and outboard containment isolation valves on containment prepurge cleanup supply lines to the drywell and torus, respectively. The nitrogen makeup to the drywell and torus takes place through a connection point between the inboard and outboard containment isolation valves on the Hydrogen and Oxygen Analyzer System supply line to the drywell and torus, respectively.

The Containment Inerting and Purging System provides inerting, makeup, purging and venting flow paths.

During the inerting process, nitrogen is introduced to the drywell and torus through the nitrogen supply header and the containment prepurge cleanup supply lines. The torus to drywell vacuum breakers are cycled to promote torus atmosphere mixing since there are no fans to provide this function. Additionally, the Drywell Cooling System is used to promote atmosphere mixing within the primary containment. While nitrogen is being admitted to the torus and drywell, air will be drawn through the containment prepurge cleanup return line from the drywell until the desired oxygen level in the primary containment is obtained.

During the makeup process, nitrogen will be admitted to the torus or drywell through the "B" train of the hydrogen and oxygen analyzer inboard containment sample valves to maintain the required oxygen level and pressure in the primary containment.

During the purging process, fresh air is supplied through the appropriate containment prepurge cleanup system inboard and outboard supply isolation valves, and the drywell and torus atmosphere is purged to the Reactor Building Ventilation System through the containment prepurge cleanup system return inboard and outboard isolation valves, and the drywell ventilation exhaust damper. The purging process takes place during periods of reactor shutdown to maintain a suitable environment for personnel occupancy of the primary containment.

During the venting process, the normal flow path is from the drywell or torus, depending on which is being vented, through inboard isolation valve located on the containment prepurge cleanup system return lines from the primary containment. After passing through the isolation valve, flow passes through a bypass valve. The bypass valve bypasses the outboard containment prepurge cleanup system isolation valve from the drywell or torus to the Reactor Building Ventilation System.

All remotely operated containment isolation valves in the Containment Inerting and Purging System are automatically closed by the Primary Containment Isolation System upon indications of high drywell pressure, low-low reactor water level or Reactor Building exhaust high radiation. These isolation signals can be overridden to enable inerting and purging.

For more detailed information see UFSAR Section 6.2.5.

System Boundary

The Containment Inerting and Purging System boundary begins at the liquid nitrogen supply to the liquid nitrogen vaporizer system, and it continues through the nitrogen vaporizer. The vaporized nitrogen continues through a flow control station, consisting of a flow control valve and a bypass valve, and then continues through a header that enters the remaining portion of the Containment Inerting and Purging System located within the Reactor Building. Within the Reactor Building the vaporized nitrogen continues through a nitrogen supply header isolation valve until it splits into two headers, the six inch nitrogen supply header and the one inch nitrogen makeup header.

The nitrogen supply header inlet flowpath includes a flow element, followed by a flow control valve and supply header isolation valve before splitting into two separate paths, one for nitrogen supply to the drywell and one for nitrogen supply to the torus. The nitrogen supply line to the drywell terminates at a point between two containment isolation valves on the containment prepurge cleanup system supply line that enters the spherical section of the drywell. The nitrogen supply line to the torus terminates at a point between two containment isolation valves on the containment prepurge cleanup system supply line to the torus.

The nitrogen makeup header inlet flowpath includes a flow element, followed by an isolation valve before it splits into two separate paths, one for nitrogen makeup to the drywell and one for nitrogen makeup to the torus. Nitrogen makeup to the drywell is through one of the two containment hydrogen and oxygen analyzer sample lines, on the "B" train, from the drywell that is located closer to the spherical region of the drywell. The nitrogen makeup to the drywell terminates at the hydrogen and oxygen analyzer sample line from the drywell. Nitrogen makeup to the torus is through one of the two hydrogen and oxygen analyzer sample lines, on the "B" train, from the torus that is located closer to the mid section of the torus. The nitrogen makeup to the torus terminates at the hydrogen and oxygen analyzer sample line.

The Containment Inerting and Purging System boundary continues through the containment prepurge cleanup system return lines from the drywell and torus. The Containment Inerting and Purging System return flowpath from the drywell is through the containment prepurge cleanup system return line from the cylindrical region of the drywell, which is equipped with containment isolation valves downstream of the connection point to the Hydrogen Recombiner System. The Containment Inerting and Purging System return flowpath from the torus is through the containment prepurge cleanup system return line from the torus, which is equipped with containment isolation valves downstream of the connection point to the Hydrogen Recombiner System, and also downstream of the connection point to the reactor building to torus vacuum relief valves. Between the containment isolation valves is the connection to the hardened torus vent line, which passes through the Reactor Building and vents to the atmosphere. Also included in the system boundary are those portions of the containment prepurge cleanup system supply and return lines that lead to the drywell and torus, up to and including the second containment isolation valve.

All associated piping, components, and instrumentation contained within the flowpath described above are included in the Containment Inerting and Purging System.

Also included in the license renewal scoping boundary of the Containment Inerting and Purging System are those portions of nonsafety-related piping and equipment that extend beyond the safety-related and nonsafety-related interface up to the location of the first seismic anchor. Included in this boundary are components relied upon to preserve the structural support intended function of this portion of the system. For more information, refer to the license renewal boundary drawing for identification of this boundary, shown in red.

Not included in the scope of license renewal is the liquid nitrogen vaporizor system portion of the Containment Inerting and Purging System, located within the Auxiliary Building, as this portion of the system does not support any intended functions.

Also, not included in the Containment Inerting and Purging System license renewal scoping boundaries are the following systems or structures, which are separately evaluated as license renewal systems:

Containment Hydrogen Recombiner System
Drywell Air Cooling System
Hardened Torus Vent System
Hydrogen and Oxygen Analyzer System
Main Condenser Air Extraction System
Primary Containment
Reactor Building Ventilation System (containment prepurge cleanup system)
Vacuum Relief Valve System (torus to drywell vacuum breakers)

Reason for Scope Determination

The Containment Inerting and Purging System meets 10 CFR 54.4(a)(1) because it is a safety-related system that is relied upon to remain functional during and following design basis events. It meets 10 CFR 54.4(a)(2) because failure of nonsafety-related portions of the system could prevent satisfactory accomplishment of function(s) identified for 10 CFR 54.4(a)(1). It also meets 10 CFR 54.4(a)(3) because it is relied upon in safety analyses or plant evaluations to perform a function that demonstrates compliance with the Commission's regulations for Environmental Qualification (10 CFR 50.49), Station Blackout (10 CFR 50.63) and Fire Protection (10 CFR 50.48). The Containment Atmosphere Control System is not relied upon in any safety analyses or plant evaluations to perform a function that demonstrates compliance with the Commission's regulation for Anticipated Transient Without Scram (10 CFR 50.62).

System Intended Functions

1. Provide Primary Containment boundary. The Containment Inerting and Purging System includes primary containment isolation valves that close on high drywell pressure, low-low reactor water level, and Reactor Building exhaust high radiation. 10 CFR 54.4(a)(1)

2. Control combustible gas mixtures in the Primary Containment atmosphere. The Containment Inerting and Purging System is only credited during normal operation to establish an inert drywell environment to preclude any release from a possible hydrogen-oxygen

reaction following a postulated loss-of-coolant-accident. This system is not required to function during a design basis event. 10 CFR 54.4 (a)(1)

3. Resist nonsafety-related SSC failure that could prevent satisfactory accomplishment of a safety-related function. Some portions of nonsafety sections of the nitrogen supply header and the nitrogen makeup header are relied upon to preserve the structural support intended function of this portion of the system. 10 CFR 54.4(a)(2)

4. Relied upon in safety analyses or plant evaluations to perform a function that demonstrates compliance with the Commission's regulations for Fire Protection (10 CFR 50.48). The inerted conditions within the primary containment prevents start of fire in the primary containment. 10 CFR 54.4(a)(3)

5. Relied upon in safety analyses or plant evaluations to perform a function that demonstrates compliance with the Commission's regulations for Environmental Qualification (10 CFR 50.49). The limit switches associated with the primary containment isolation valves within the Containment Inerting and Purging System are environmentally qualified. 10 CFR 54.4(a)(3)

6. Relied upon in safety analyses or plant evaluations to perform a function that demonstrates compliance with the Commission's regulations for Station Blackout (10 CFR 50.63). Provides miscellaneous instrumentation used by plant station blackout procedure to monitor plant conditions during coping, shutdown and restoration. 10 CFR 54.4(a)(3)

UFSAR References

6.2.5.2.1

License Renewal Boundary Drawings

LR-M-57-1, Sheet 1
LR-M-76-1, Sheet 1

Table 2.3.3-4 Containment Inerting and Purging System Components Subject to Aging Management Review

Component Type	Intended Function
Bolting	Mechanical Closure
Expansion Joints	Structural Support
Flow Element	Structural Support
Piping and Fittings	Pressure Boundary
Piping and Fittings	Structural Support
Valve Body	Pressure Boundary
Valve Body	Structural Support

The aging management review results for these components are provided in:

Table 3.3.2-4 Containment Inerting and Purging System Summary of Aging Management Evaluation

2.3.3.5 Control Area Chilled Water System

System Purpose

The Control Area Chilled Water System is a normally operating mechanical system designed to provide chilled water to plant ventilation cooling coils. The Control Area Chilled Water System consists of two plant systems: control room chilled water system and the safety-related panel room chilled water system. The purpose of the Control Area Chilled Water System is to provide cooling water to the safety-related and nonsafety-related ventilation systems for the Control Room and Control Area HVAC System and the Standby Diesel Generator Area Ventilation System. Chilled water is provided to the following ventilation system rooms: main control room, auxiliary equipment rooms, emergency switchgear rooms, safety auxiliary cooling pump rooms, class 1E panel rooms, technical support center and the remote shutdown panel room. The Control Area Chilled Water System accomplishes this purpose by providing a continuous supply of chilled water to the cooling coils for room cooling coils in the Control Room and Control Area Ventilations System and the Standby Diesel Area Ventilation System during normal and accident conditions. Each of the Control Area Chilled Water System plant systems consists of two independent 100 percent capacity chilled water loops to provide for complete mechanical redundancy. The redundant trains will start on the following conditions: low flow conditions indicated on in-service train, and on either high or low chilled water supply temperatures for the operating loop.

System Operation

The Control Area Chilled Water System consists of the following safety-related cooling and ventilation plant systems; control room chilled water plant system and the safety-related panel room chilled water plant system.

Control Room Chilled Water Plant System

The control room chilled water plant system consists of two independent 100 percent capacity chilled water loops, providing complete mechanical redundancy. One train is normally in operation and the other train is in standby. Each safety-related train consists of one water chiller, a full capacity recirculation pump, head tank, chemical addition tank, cooling coils, piping header, controls and instrumentation. The flow path begins at the pump, and continues to the water chiller evaporator, and is then distributed in parallel to the safety-related components cooled (control room a/c unit cooling coils, switchgear room cooling unit coils, control equipment room a/c unit cooling coils and safety auxiliary system room cooling unit cooling coils). The flowpath then leaves the equipment being cooled and flows through the return header and is routed back to the pump suction. The standby train automatically starts on failure of the in-service train, and on either high or low chilled water supply temperatures for the operating loop.

The control area water chiller is used to cool the closed loop water for the control room chilled water plant system. Each redundant train has a full capacity chiller and associated skid mounted equipment including the evaporator and condenser heat exchangers. The chilled water enters the tube side of the evaporator where it is cooled, and discharges to the common piping header to the cooled safety-related components. Refrigerant is used as the chiller cooling medium and heat is rejected to the chiller condenser. The cooling water supply to the chiller condenser is from the safety auxiliaries cooling plant system, which is evaluated with

the Closed Cycle Cooling Water System. The chiller compressor is an integral part of the active chiller assembly and is therefore not subject to license renewal Aging Management Review. The pumpout unit and storage tanks associated with each chiller are used for refrigerant transfer, machine evacuation and machine pressurizing for refrigerant charge during machine service periods and extended shutdown, and do not have a license renewal intended function.

Safety-Related Panel Room Chilled Water Plant System

The safety-related panel room chilled water plant system consists of two independent 100 percent capacity chilled water loops, providing complete mechanical redundancy. One train is normally in operation and the other train is in standby. Each safety-related train consists of one water chiller, a full capacity recirculation pump, head tank, chemical addition tank, chiller, cooling coils, piping, controls and instrumentation. The flow path begins at the pump, and continues to the water chiller evaporator and is then distributed in parallel to the components cooled (class 1E panel room supply a/c cooling coils, remote shutdown panel room cooling coil and technical support center a/c unit cooling coil). The flowpath then leaves the equipment being cooled and flows into a common return header and is routed back to the full capacity recirculation pump suction. The safety-related panel room chilled water plant system provides cooling to both safety-related and nonsafety-related compartments. The standby train automatically starts on low flow conditions indicated on the in-service train, and on either high or low chilled water supply temperatures for the operating loop.

The tech support center and 1E panel room water chiller is used to cool the closed loop water for the safety-related panel room chilled water plant system. Each redundant train has a full capacity chiller and associated skid mounted equipment including the evaporator and condenser heat exchangers. The chilled water enters the tube side of the evaporator where it is cooled and discharges to the common piping header and to the cooled components. Refrigerant is used as the cooling medium and heat is rejected to the chiller condenser. The cooling water supply to the chiller condenser is from the safety auxiliaries cooling plant system, which is evaluated with the Closed Cycle Cooling Water System. The chiller compressor is an integral part of the active chiller assembly and is therefore not subject to license renewal Aging Management Review.

For additional information see, UFSAR section: 9.2.7.2

System Boundary

Control Room Chilled Water Plant System

The control room chilled water plant system boundary begins at the inlet to the chilled water circulation pump, and continues through the tube side of the water chiller evaporator and through all the cooled loads (control room cooling coil, control equipment room coil, switchgear cooling coils and the safety auxiliary room cooling coils). The system boundary continues from the cooled loads back to the suction of the chilled water circulating pump. Also included in the system boundary are the head tank and chemical addition tank.

Safety-Related Panel Room Chilled Water Plant System

The safety-related panel room chilled water system boundary begins at the inlet to the chilled water circulation pump and continues through the tube side of the water chiller evaporator and

through all the cooled loads (remote shutdown panel cooling coil, technical support center cooling coil and the class 1E panel cooling coils). The system boundary continues from the cooled loads back to the suction of the chilled water circulating pump. Also included in the system boundary are the head tank and chemical addition tank.

The housings that provide structural support for the various ventilation system cooling coils supplied by the Control Area Chilled Water System, and which are required to support the ventilation system intended functions, are normally evaluated with the associated ventilation license renewal system. The technical support center supply unit ventilation system is part of the Auxiliary Building Service and Radwaste Area Ventilation license renewal system, which does not have any intended functions and is not in the scope of license renewal. The housing that provides structural support for the cooling coils associated with this ventilation unit in the Auxiliary Building Service and Radwaste Area Ventilation license renewal system will be evaluated with the Control Area Chilled Water System.

Not included in the scope of license renewal are the pumpout unit and storage tanks associated with each chiller which are used for refrigerant transfer, machine evacuation and machine pressurizing for refrigerant charge during machine service periods and extended shutdown. These components do not perform an intended function and are therefore not included in the scope of license renewal.

Not included in the Control Area Chilled Water System boundary are the following interfacing systems, which are separately evaluated as license renewal systems:

Closed Cycle Cooling Water System
Control Room and Control Area HVAC System
Makeup Demineralized System
Reactor Building Ventilation System
Standby Diesel Generator Area Ventilation System

Reason for Scope Determination

The Control Area Chilled Water System meets 10 CFR 54.4(a)(1) because it is a safety-related system that is relied upon to remain functional during and following design basis events. It meets 10 CFR 54.4(a)(2) because failure of nonsafety-related portions of the system could prevent satisfactory accomplishment of functions(s) identified for 10 CFR 54.4(a)(1). It also meets 10 CFR 54.4(a)(3) because it is relied upon in the safety analyses or plant evaluations to perform a function that demonstrates compliance with the Commission's regulation for Fire Protection (10 CFR 50.48). The Control Area Chilled Water System is not relied upon in any safety analysis or plant evaluations to perform a function that demonstrates compliance with the Commission's regulations for Environmental Qualification (10 CFR 50.49), Anticipated Transient Without Scram (10 CFR 50.62) or Station Blackout (10 CFR 50.63).

System Intended Functions

1. Maintain emergency temperature limits within areas containing safety-related components. The Control Area Chilled Water System and Standby Diesel Generator Area Ventilation System maintain the operating conditions for safety related equipment and components in the ventilation boundary. 10 CFR 54.4 (a)(1)

2. Resist nonsafety-related SSC failure that could prevent satisfactory accomplishment of a safety-related function. The demineralized water make-up piping to the head tanks are nonsafety-related but located in the vicinity of safety-related components. 10 CFR 54.4 (a)(2).

3. Relied upon in safety analysis or plant evaluations to perform a function that demonstrates compliance with the Commission's regulations for Fire Protection. (10 CFR 50.48) The Control Area Chilled Water System provides chilled water for safety related equipment compartments required during safe shutdown. 10 CFR 54.4(a)(3)

UFSAR References

9.2.7.2

License Renewal Boundary Drawings

LR-M-83-1, Sheet 1
LR-M-88-1, Sheet 1
LR-M-88-1, Sheet 2
LR-M-89-1, Sheet 1
LR-M-90-1, Sheet 1
LR-M-90-1, Sheet 2
LR-M-90-1, Sheet 3
LR-M-93-0, Sheet 2

Table 2.3.3-5 Control Area Chilled Water System Components Subject to Aging Management Review

Component Type	Intended Function
Bolting	Mechanical Closure
Fan Housing (TSC)	Structural Support
Flow Device	Leakage Boundary
Flow Element	Pressure Boundary
Heat Exchanger Components (1E Panel Room Cooling Coils)	Heat Transfer
Heat Exchanger Components (1E Panel Room Cooling Coils)	Pressure Boundary
Heat Exchanger Components (Condenser)	Evaluated with the Closed Cycle Cooling Water System
Heat Exchanger Components (Conrol Equipment Room Cooling Coil)	Heat Transfer
Heat Exchanger Components (Conrol Equipment Room Cooling Coil)	Pressure Boundary
Heat Exchanger Components (Contol Room Supply Cooling Coils)	Heat Transfer
Heat Exchanger Components (Contol Room Supply Cooling Coils)	Pressure Boundary
Heat Exchanger Components (Evaporator AK 400, BK 400, AK 403, BK 403)	Heat Transfer
Heat Exchanger Components (Evaporator AK 400, BK 400, AK 403, BK 403)	Pressure Boundary
Heat Exchanger Components (RSP Room Cooling Coils)	Heat Transfer
Heat Exchanger Components (RSP Room Cooling Coils)	Pressure Boundary
Heat Exchanger Components (SACS Room Cooling Coils)	Heat Transfer
Heat Exchanger Components (SACS Room Cooling Coils)	Pressure Boundary
Heat Exchanger Components (Switchgear Room Cooling Coils)	Heat Transfer
Heat Exchanger Components (Switchgear Room Cooling Coils)	Pressure Boundary
Heat Exchanger Components (TSC Coils)	Pressure Boundary
Piping and Fittings	Leakage Boundary
Piping and Fittings	Pressure Boundary
Piping and Fittings	Structural Support

Component Type	Intended Function
Pump Casing (Chilled Water Pump AP 400, BP 400, AP 414, BP 414)	Pressure Boundary
Rupture Disks	Pressure Boundary
Rupture Disks	Structural Support
Sight Glasses	Leakage Boundary
Sight Glasses	Pressure Boundary
Strainer	Filter
Strainer Body	Pressure Boundary
Tanks (Chem Feed AT 401, BT 401, AT 414, BT 414))	Leakage Boundary
Tanks (Head Tank AT 410, BT 410, AT413, BT 413)	Pressure Boundary
Thermowell	Pressure Boundary
Valve Body	Leakage Boundary
Valve Body	Pressure Boundary
Valve Body	Structural Support

The aging management review results for these components are provided in:

Table 3.3.2-5 Control Area Chilled Water System Summary of Aging Management Evaluation

2.3.3.6 Control Rod Drive System

System Purpose

The Control Rod Drive System is a high pressure, low flow system designed to rapidly insert all control rods into the core in response to manual action or an automatic signal from the Reactor Protection System, or the Redundant Reactivity Control System. Also, it incrementally positions control rods in response to signals from the Reactor Manual Control System. The Control Rod Drive System is in scope for license renewal. However, portions of the system are not required to perform intended functions and are not in scope.

The Control Rod Drive System consists of the following plant systems: control rod drive hydraulic system, and control rod drive removal and cleaning system. The primary purpose of the control rod drive hydraulic system is to rapidly insert negative reactivity to shut down the reactor under accident or transient conditions and to manage reactivity in the reactor core by inserting or withdrawing control rods at a limited rate, one rod at a time for power level control and flux shaping during normal reactor operation. The control rod drive hydraulic system accomplishes this by providing water at the required operating pressures to the control rod drives for cooling and for all types of control rod motion in response to inputs from the Reactor Manual Control System, Redundant Reactivity Control System and Reactor Protection System.

The secondary purpose of the Control Rod Drive System is to provide a water source for pump seal operation and makeup. This includes reactor recirculation pump seal purge and makeup water to the reactor water level reference leg condensing chambers.

System Operation

The Control Rod Drive System is comprised of control rod drive mechanisms and the control rod drive hydraulic system.

Each of the control rod drive mechanisms is a double acting, mechanically latched, hydraulic cylinder using reactor grade water as the operating fluid. Each control rod drive mechanism is capable of inserting or withdrawing the attached control rod at a slow, controlled rate, as well as providing rapid insertion in an emergency. A locking mechanism allows a drive to be positioned during stroking and will hold the control rod in a fixed position. Each control rod drive mechanism is an integral unit mounted vertically inside a drive housing, welded to a stub tube, which is welded into a reactor bottom head penetration (evaluated with the Reactor Vessel). The lower end of each drive housing terminates in a flange containing ports for attaching the hydraulic lines from the hydraulic control units, and a machined face which mates with a corresponding flange at the lower end of the control rod drive mechanism drive housing.

The control rod drive hydraulic system is comprised of AC powered drive water pumps, filters, control valves, piping and associated instrumentation and controllers. In normal operation, the Control Rod Drive System takes suction from the Condensate System or condensate storage tank through the control rod drive pump suction filters. One of the two control rod drive water pumps pressurizes condensate water, which is then passed through parallel drive water filters. The discharge from the filters supplies the hydraulic control units via the charging header, the drive water header, and the cooling water header, each at a different pressure. The charging

header supplies pressurized water to maintain the accumulators charged and ready for service in the event of a scram. Stored energy available from the nitrogen charged accumulators and from reactor pressure provides hydraulic power for rapid simultaneous insertion, or scram, of all control rods. The drive water header provides the control rod drive mechanisms with motive force for moving the control rods to manage reactivity in the reactor core. The cooling water header provides a constant flow of water to the control rod drive mechanisms to maximize the life of the internal seals. Minimum flow protection to the drive water pumps is provided by a line from the discharge of each pump to the condensate storage tank.

The control rod drive hydraulic system is arranged so that the equipment supporting each control rod drive mechanism is packaged into modular hydraulic control units, one hydraulic control unit module to each drive. The hydraulic control units receive signals from the Reactor Manual Control System, Redundant Reactivity Control System, or Reactor Protection System and direct water to and from the control rod drive mechanisms to move the control rods accordingly. Water exhausted from the control rod drive mechanisms is returned through the hydraulic control units to the exhaust water header and discharged into the control rod drive return header. Each control rod drive mechanism has its own separate control and scram devices. Solenoid operated valves on each hydraulic control unit direct air pressure from the instrument air system scram valve pilot air headers to the inlet and outlet scram valves on each hydraulic control unit to maintain them in a closed position during normal operation, or to vent them to atmosphere on a scram signal or loss of power.

The hydraulic control units are arranged into a north and a south bank, each of which discharges into its own scram discharge volume. Each scram discharge volume also includes an instrument volume with level instrumentation. The scram discharge volume receives reactor water exhausted from all the control rod drives during a scram. During a scram, the scram discharge volumes are isolated from equipment drains. During normal plant operation and following a scram, the scram discharge volumes are drained to the reactor building equipment drain sump.

The Control Rod Drive System also provides a flow path to provide high pressure water to the reactor recirculation pump seal purge and to provide makeup water to the Nuclear Boiler Instrumentation System reactor water level condensing chambers. It also includes a flow path from the Nuclear Boiler Instrumentation System that provides a reference of vessel pressure above the core plate for use with Control Rod Drive System differential pressure measurement instrumentation.

The Control Rod Drive System has two friction test stations with associated instrumentation, valves and piping used to test the scram times of control rods. The hydraulic control units are isolated from the friction test stations by manual valves when the test stations are not in use. Opening of manual valves to the test stations allows hydraulic control unit hydraulic pressure to be measured by the friction test station to identify any significant lengthening of control rod scram times.

For more detailed information, see UFSAR Sections 4.6 and 3.9.4.

System Boundary

The Control Rod Drive System suction side boundary begins at the Control Rod Drive System attachment points to the Condensate and Condensate Storage and Transfer Systems. The boundary continues through the control rod drive pump suction filters, control rod drive drive

water pumps, the drive water filters, to the hydraulic control units (including the inlet and outlet scram valves) and control rod drive mechanisms via the charging, drive water and cooling headers and back via the exhaust header. The boundary includes the suction piping, discharge piping, minimum flow line to the condensate storage tank connection, test bypass and stabilizing header lines, hydraulic control units, control rod drive mechanisms and control rod drive insert and withdraw lines up to the control rod drive housing flange. Included within the system boundary are the scram discharge volume and instrument volume, their associated piping, instruments, valves, vents and drains. Also included within the system boundary is the piping and valves associated with the reactor recirculation pump seal purge water supply up to and including the outboard containment isolation valves. The piping and valves, including the control rod drive backfill station associated with supplying control rod drive makeup water to the reactor water level instrumentation are also included in the system boundary up to the first safety related check valve. This check valve and associated downstream piping, valves and instruments are evaluated with the Nuclear Boiler Instrumentation System. Additional portions of the system included in the Control Rod Drive System boundary include the piping and valves associated with the friction test station, and the piping and valves associated with the sensing line for reactor pressure above core plate, beginning after the safety related manual isolation valve. This valve as well as the piping back to the reactor vessel are evaluated with the Nuclear Boiler Instrumentation System. All associated piping, components and instrumentation contained within the flow paths described above are included in the Control Rod Drive System boundary

Included in the license renewal scoping boundary of the Control Rod Drive System are those portions of nonsafety-related piping and equipment that extend beyond the safety-related to nonsafety-related interface up to the location of the first seismic anchor, or to a point no longer in proximity to equipment performing a safety-related function, whichever extends furthest. This includes the nonsafety-related portions of the system located within the Reactor Building and the Auxiliary Building. Included in this boundary are pressure retaining components relied upon to preserve the leakage boundary intended function of this portion of the system. For more information, refer to the license renewal boundary drawing for identification of this boundary, shown in red.

Not included in the Control Rod Drive System boundary are the control rod drive housings, which are evaluated with Reactor Internals, and stub tubes, which are evaluated with the Reactor Pressure Vessel. Also not included in the Control Rod Drive System license renewal scoping boundary are the following interfacing systems, which are evaluated as separate license renewal systems:

Control Rods
Compressed Air System
Equipment and Floor Drainage System
Condensate Storage and Transfer System
Closed Cooling Water System
Reactor Pressure Vessel
Reactor Recirculation System
Nuclear Boiler Instrumentation

Reason for Scope Determination

The Control Rod Drive System meets 10 CFR 54.4(a)(1) because it is a safety-related system that is relied upon to remain functional during and following design basis events. It meets 10 CFR 54.4(a)(2) because failure of nonsafety-related portions of the system could prevent satisfactory accomplishment of function(s) identified for 10 CFR 54.4(a)(1). It also meets 10 CFR 54.4(a)(3) because it is relied upon in the safety analyses or plant evaluations to perform a function that demonstrates compliance with the Commission's regulations for Fire Protection (10 CFR 50.48), Environmental Qualification (10 CFR 50.49), Anticipated Transient Without Scram (10 CFR 50.62), and Station Blackout (10 CFR 50.63).

System Intended Functions

1. Provide reactor coolant pressure boundary. The control rod drive mechanisms (CRDMs) are considered part of the reactor pressure boundary. 10 CFR 54.4(a)(1)

2. Introduce negative reactivity to make the reactor subcritical. The system inserts control rods from Reactor Protection System signals. 10 CFR 54.4(a)(1)

3. Provide primary containment boundary. The system provides containment isolation at each rod insert and withdraw line and at the reactor recirculation pump purge seal penetrations. 10 CFR 54.4(a)(1)

4. Resist nonsafety-related SSC failure that could prevent satisfactory accomplishment of a safety-related function. The system includes nonsafety-related piping within the Reactor and Auxilliary Buildings. 10 CFR 54.4(a)(2)

5. Relied upon in safety analyses or plant evaluations to perform a function that demonstrates compliance with the Commission's regulations for Fire Protection (10 CFR 50.48). The system is credited for reactor shutdown. 10 CFR 54.4(a)(3)

6. Relied upon in safety analyses or plant evaluations to perform a function that demonstrates compliance with the Commission's regulations for Environmental Qualification (10 CFR 50.49). The system includes containment isolation valves, which are part of the Environmental Qualification program. 10 CFR 54.4(a)(3)

7. Relied upon in safety analyses or plant evaluations to perform a function that demonstrates compliance with the Commission's regulations for Anticipated Transient Without Scram (10 CFR 50.62). The system is required to insert control rods using signals from the Redundant Reactivity Control System. 10 CFR 54.4(a)(3)

8. Relied upon in safety analyses or plant evaluations to perform a function that demonstrates compliance with the Commission's regulations for Station Blackout (10 CFR 50.63). The system is credited for reactor shutdown. 10 CFR 54.4(a)(3)

UFSAR References

3.9.4
4.6

License Renewal Boundary Drawings

LR-M-08-0, Sheet 2
LR-M-23-1, Sheet 2
LR-M-42-1, Sheet 1
LR-M-43-1, Sheet 1
LR-M-46-1, Sheet 1
LR-M-46-1, Sheet 2
LR-M-47-1, Sheet 1

Table 2.3.3-6 Control Rod Drive System
Components Subject to Aging Management Review

Component Type	Intended Function
Accumulator	Pressure Boundary
Bolting	Mechanical Closure
Filter Housing	Leakage Boundary
Flow Device	Leakage Boundary
Flow Element	Leakage Boundary
Gearbox	Leakage Boundary
Heat Exchanger Components (CRD Pump Gear Oil Cooler)	Leakage Boundary
Piping and Fittings	Leakage Boundary
Piping and Fittings	Pressure Boundary
Pump Casing (CRD)	Leakage Boundary
Restricting Orifices	Leakage Boundary
Rupture Disks	Pressure Boundary
Sensor Element	Leakage Boundary
Strainer Body	Leakage Boundary
Thermowell	Leakage Boundary
Valve Body	Leakage Boundary
Valve Body	Pressure Boundary

The aging management review results for these components are provided in:

Table 3.3.2-6 Control Rod Drive System
Summary of Aging Management Evaluation

2.3.3.7 Control Room and Control Area HVAC Systems

System Purpose

The Control Room and Control Area HVAC Systems is a mechanical system designed to provide normal and emergency ventilation to the control room and associated areas in the Auxiliary Building. The Control Room and Control Area HVAC System consists of the following plant systems: the control room supply, the control area exhaust, the control room emergency filter, the control equipment room supply, the control area battery exhaust, the control area smoke exhaust, the wing area supply, the wing area exhaust, elevator machine room wall exhaust fan and the compartment electric unit heaters.

The purpose of the Control Room and Control Area HVAC Systems is to maintain habitability conditions within the control room envelope (senior shift supervisors office, computer room, instructional viewing room, ready room, storage room and toilet rooms), maintain area temperatures within acceptable limits, maintain hydrogen concentrations for all battery rooms below 2%, and remove smoke and noxious gases in the event of a fire. The Control Area Ventilation System accomplishes this purpose by regulating temperature, humidity, and pressure during normal and accident conditions, and by providing adequate ventilation flow capacity.

The system monitors radiation levels at the outside air intakes, and automatically diverts the outside air supply through charcoal filter trains to provide a habitable environment for control room operators following a radiological release event. The filter trains can be operated by filtering a mixture of recirculation air and outside air or by filtering 100% recirculation air with no outside air (full recirculation mode). The Control Room and Control Area Ventilation System maintains room pressure above that of the adjacent areas to prevent in leakage into the main control room, except when the system is operating in the full recirculation mode.

System Operation

The control room supply and control area exhaust plant systems consists of redundant supply, exhaust and return air systems and air handling units used to maintain habitable conditions in the main control room and associated adjacent areas. Each redundant loop consists of a control room return air fan, supply fan, exhaust fan, electric heating coil, humidifier, cooling coil, filters, controls, detectors, instrumentation and distribution ductwork. The Control Area Chilled Water System supplies the chilled water for the cooling coils. The cooling coils are evaluated in the Control Area Chilled Water System. One of the redundant loops is normally operating with the other loop maintained in standby. During accident conditions, the control room emergency filter plant system is automatically placed into service.

The control room emergency filter plant system is safety-related and consists of two 100% filter trains. Each filter train consists of an electric heating coil, pre-filter, upstream and downstream HEPA filters and a charcoal absorber. Each control room emergency filter train operates in series with one control room supply fan unit and return unit. The control room emergency filter system is automatically initiated in the event of a LOCA or when a high radiation level is detected at the outside air intake. The system can be manually placed either into the full or partial recirculation mode. The control room emergency filter unit is completely redundant and is normally in a standby mode.

The control equipment room supply plant system provides ventilation, cooling and heating to diesel area HVAC equipment room and all elevations within the control area of the Auxiliary Building, except the main control room. The control equipment room supply system is safety-related and consists of two 100% capacity air handling units, each consisting of a fan, low efficiency pre-filter, cooling coils, an electric heater, high efficiency filter, controls, instrumentation and distribution ductwork. The Control Area Chilled Water System supplies the chilled water for the cooling coils. The cooling coils are evaluated in the Control Area Chilled Water System. The system filters and heats or cools a mixture of recirculated air and outside air. One of the redundant loops is normally operating with the other loop maintained in standby. Failure of the operating fan will automatically start the standby system.

The control area battery exhaust plant system consists of two 100% capacity exhaust fans, a control damper and tornado damper. This safety-related plant system is designed to maintain environmental conditions and exhaust potential hydrogen gasses generated in the battery compartments during normal and emergency conditions. One of the fans is normally in operation with the other fan in standby. Upon a low flow condition or an operating fan failure, the standby unit will automatically start.

The control area smoke exhaust plant system is a nonsafety-related system and consists of a single 100% capacity fan and associated ductwork. The system is normally maintained in standby. The system is available to exhaust smoke and fumes in the event of a fire in the control area of the Auxiliary Building. Smoke from an effected area is purged by manually opening the appropriate dampers and starting the fan. The control area smoke exhaust fan will only be placed into service on post fire conditions to remove smoke once a fire has been extinguished, however this exhaust fan is not required to perform an intended function for the Fire Protection Program.

The wing area supply and exhaust plant systems are not safety-related, and are designed to maintain the wing area within the auxiliary building at specified temperatures. The systems consist of two 50% supply and exhaust fans that are designed to run continuously during normal plant operation. The supply units provide a source of clean outside air, which flows through the filter unit consisting of an intake roughing and high capacity filters, steam heating coil, and supply ductwork.

Included in the Control Room and Control Area Ventilation System is the elevator machine room wall exhauster fan. The nonsafety-related elevator machine room wall exhauster flow path is from the machine room compartment directly to the outdoors when placed into operation. This nonsafety-related fan is a full capacity wall mounted fan and is manually started and stopped if ventilation of the compartment is required. Also included are the compartment electric unit heaters. These self contained heaters will automatically operate using local thermostats.

For more detailed information, see UFSAR sections 6.4 and 9.4.1.

System Boundary

The control room supply plant system boundary begins at the inlet louver, and continues to the inlet plenums containing the radiation and smoke detectors. The system boundary continues through tornado and inlet dampers and the supply ductwork, to the inlet to the control room return air fans, where the supply ductwork connects to the return air ductwork from the various areas of the control room. The system boundary continues through the control room return air

fans and leads to the supply ductwork of the control room supply unit. The control room supply unit includes the low and high efficiency filters, supply fans, chilled water cooling and electric heating coils and humidifier. The chilled water cooling coil is evaluated as part of the Control Area Chilled Water System. After exiting the control room supply unit, the system boundary connects to common discharge ductwork that distributes air to the various control room areas. The boundary ends at the discharge registers, located in the following rooms: computer room, control room, watch engineer room, storage room, ready room, instructional viewing room and console pit room. The 24" diameter reinforced concrete missile shield tube is evaluated as part of the Auxiliary Building/Diesel Generator Area structure for license renewal aging management review.

The control room exhaust plant system boundary begins at the control room area exhaust registers and continues to a common exhaust duct, through two isolation dampers, and continuing to the exhaust fans inlet. The system boundary continues through the fans and discharge ductwork and through the fan discharge damper and tornado damper and the boundary ends at the exhaust outside the building. The control room exhaust plant system is not safety-related, except for the isolation dampers, tornado damper and associated ductwork. The isolation dampers are required to close to isolate the control room envelope during accident conditions. The tornado damper closes in the event of severe weather, to provide tornado protection to the structure and enclosed safety-related systems. The isolation dampers, tornado damper and associated ductwork are included in the scope of license renewal. The remainder of the control room exhaust plant system, including the exhaust fans and fan inlet and discharge dampers, are not required to perform an intended function and are not in scope for license renewal.

The control room emergency filter plant system is safety-related. The boundary begins at the outdoor inlet isolation dampers, and includes the connecting ductwork to the inlet of the control room return air fan. The boundary continues to the inlet of the control room emergency filter supply fan and through the control room emergency filter unit, which include an electric heating coil, roughing filter, charcoal absorber and up stream and down stream HEPA filters and connecting ductwork, instruments and controls. The plant system boundary ends at the inlet connection to the control room supply unit.

The control equipment room supply plant system boundary begins at the outside air inlet louvers and continues to the inlet to the control equipment room supply units. The system boundary continues through the control equipment room supply units that include low and high efficiency filters, a fan, an electric heater, a cooling coil, and associated instruments and controls. The chilled water cooling coil will be evaluated as part of the Control Area Chilled Water System. After exiting the control equipment room supply unit, the system boundary continues through a common discharge duct and distributes air to various control room areas within the Auxiliary Building. Also included in the system boundary is the return air registers and ductwork that provide return air flow from the various control room areas to a connection with the control equipment room supply unit inlet ductwork.

The control area battery exhaust plant system boundary begins at the air inlet registers located in the battery rooms and continues through the exhaust ductwork to the inlet to the control area battery exhaust fans. The system boundary continues through the discharge ductwork from the fans and through the tornado dampers, and the system boundary ends at the outlet from the Auxiliary Building.

Not included in the scope of license renewal is the control area smoke exhaust plant system, wing area supply plant system, wing area exhaust plant system, elevator machine room exhaust fan and the compartment electric unit heaters of the Control Room and Control Area Ventilation System. These plant systems are not safety-related and do not perform or support license renewal intended functions, and are not included in the scope of license renewal.

Not included in the Control Room and Control Area Ventilation System license renewal scoping boundary are the following interfacing systems, which are evaluated as a separate license renewal systems:

Leak Detection and Radiation Monitoring System
Control Area Chilled Water System
Fire Protection System
Makeup Demineralizer System

Reason for Scope Determination

The Control Room and Control Area HVAC Systems meets 10 CFR 54.4(a)(1) because it is a safety-related system that is relied upon to remain functional during and following design basis events. The Control Room and Control Area HVAC System is not in scope under 10 CFR 54.4(a)(2) because failure of nonsafety-related portions of the system would not prevent satisfactory accomplishment of functions(s) identified for 10 CFR 54.4(a)(1). It also meets 10 CFR 54.4(a)(3) because it is relied upon in safety analyses or plant evaluations to perform a function that demonstrates compliance with the Commission's regulations for Fire Protection (10 CFR 50.48) and Station Blackout (10 CFR 50.63). The Control Room and Control Area Ventilation System is not relied upon in any safety analyses or plant evaluations to perform a function that demonstrates compliance with the Commission's regulations for Environmental Qualification (10 CFR 50.49), or Anticipated Transient Without Scram (10 CFR 50.62).

System Intended Functions

1. Maintain emergency temperature limits within areas containing safety-related components. The Control Room and Control Area Ventilation System maintains operating conditions for safety related equipment within required limits. 10 CFR 54.4(a)(1)

2. Provide centralized area for control and monitoring of nuclear safety-related equipment. The Control Room and Control Area Ventilation System supports the control room envelope, which is designed to provide habitability of the control room under all design conditions. 10 CFR 54.4(a)(1)

3. Relied upon in safety analysis or plant evaluations to perform a function that demonstrates compliance with the Commission's regulations for Fire Protection. (10 CFR 50.48) The Control Room and Control Area Ventilation System provides ventilation for equipment required during safe shutdown. 10 CFR 54.4(a)(3)

4. Relied upon in safety analyses or plant evaluations to perform a function that demonstrates compliance with the Commission's regulations for Station Blackout. (10 CFR 50.63) The Control Room and Control Area Ventilation System maintains control room habitability during coping and restoration. 10 CFR 54.4(a)(3)

UFSAR References

9.4.1
6.4

License Renewal Boundary Drawings

LR-M-89-1, Sheet 1

Table 2.3.3-7 Control Room and Control Area HVAC Systems Components Subject to Aging Management Review

Component Type	Intended Function
Bird Screen	Filter
Bolting	Mechanical Closure
Damper Housing	Pressure Boundary
Door Seal	Pressure Boundary
Drain Traps	Pressure Boundary
Ducting and Components	Pressure Boundary
Electric Heaters (Housing)	Pressure Boundary
Fan Housing	Pressure Boundary
Filter Housing	Pressure Boundary
Flexible Connection	Pressure Boundary
Flow Element	Pressure Boundary
Heat Exchanger Components (Control Room Supply)	Evaluated with the Control Area Chilled Water System
Louver	Pressure Boundary
Nozzle	Spray
Piping and Fittings	Pressure Boundary
Sensor Element (In-Duct Radiation Detector)	Pressure Boundary
Thermowell	Pressure Boundary
Valve Body	Pressure Boundary

The aging management review results for these components are provided in:

Table 3.3.2-7 Control Room and Control Area HVAC Systems Summary of Aging Management Evaluation

2.3.3.8 Cranes & Hoists

System Purpose

Cranes and Hoists consists of load handling bridge cranes, jib cranes, lifting devices, and hoists provided throughout the facility to support operation and maintenance activities. Cranes and Hoists include the cranes and hoists required to comply with the requirements of NUREG-0612, Control of Heavy Loads, and hoists for handling light loads. Major cranes include the reactor building polar crane and the turbine building crane.

The reactor building polar crane services the operating floor and is used to lift heavy loads such as the reactor closure head. The crane is also used to handle new fuel and transport the spent fuel cask. The reactor building polar crane main hoist and auxiliary hoist are designed to be single failure proof in conformance with NUREG-0554 and NUREG-0612. The crane is designed to include seismic loading for the OBE and SSE seismic events and is classified as seismic Category I.

The turbine building crane services the operating floor and is used to lift loads to support turbine repairs or maintenance. The crane is designed as seismic Category II.

The purpose of Cranes and Hoists is to safely move material and equipment as required to support operations and maintenance activities. The Cranes and Hoists accomplish this by compliance with NUREG-0612 and use of written procedures so damage resulting from a heavy load drop will not prevent safe shutdown of the reactor.

Included in the evaluation boundary of Cranes and Hoists are load handling systems in various areas of the facility. Cranes and hoists that are in the scope of NUREG-0612 are in scope for license renewal. Other cranes and hoists that are not in the scope of NUREG-0612 but travel in the vicinity of safety-related systems, structures, and components (SSCs) are also in scope for license renewal, if it is determined that their failure could impact a safety-related function. As a result, the following cranes and hoists are in scope for license renewal:

- reactor building polar crane
- personnel air lock hoist
- recirculation pump motor hoist
- high pressure coolant injection pump and turbine hoist
- reactor core isolation cooling pump and turbine hoist
- vacuum breaker valve removal hoist
- main steam line relief valve removal hoist
- inboard main steam isolation valve hoist
- main steam tunnel underhung crane
- diesel generator underhung crane
- intake structure gantry crane
- personnel lock shield removal hoist
- control rod drive service hoist
- safety auxiliary cooling system pumps hoist
- safety auxiliary cooling system heat exchanger hoists
- control rod drive transfer cask jib crane
- service water strainers trolley beam hoists
- service water crane

The boundary for Cranes and Hoists is limited to load bearing structural components such as, the bridge, the trolley, rail system (rails, rail clips, and rail fasteners), structural bolts, lifting devices, monorail beams, and jib crane structural members.

Cranes and hoists that were determined not in scope for license renewal are:

- reactor water clean-up filter/demineralizer hoist
- turbine building bridge crane
- feedwater heater removal hoist
- heating and ventilation equipment removal hoist
- motor-generator set hoist (recirculation pump motors)
- secondary condensate pump hoist
- reactor feed pump hoist
- water box removal hoist
- steam packing exhauster hoist
- turbine generator auxiliary crane
- chiller tube removal hoist
- emergency air compressor hoist
- main air compressor hoist
- vacuum pump water cooler hoist
- heat and cooling coil removal hoist
- solid radwaste monorail
- solid radwaste bridge crane
- demineralizer removal hoist
- demineralizer evaporator hoist
- equipment decontamination room hoist
- machine shop underhung crane
- waste evaporator recirculation pump hoist
- waste evaporator hoist
- recombiner system hoist
- feedwater flow straightener hoists
- steam jet air ejector hoist
- low level radwaste storage facility crane
- hydrogen bottles storage hoist
- demineralizer strainer basket hoist
- lock shield removal hoist
- 2 ton monorail in Torus

Failure of these cranes and hoists will not impact a safety-related intended function. Personnel lifts, pump up hydraulic lifts, two-man and one-man lifts are portable equipment and are not in scope for license renewal.

Not included in the evaluation boundary of Cranes and Hoists are the refueling platform, overhead crane structural support steel, and crane runway girders. The refueling platform is separately evaluated with the Fuel Handling and Storage System. The structural support concrete, steel and runway girders are included with the structure serviced by the crane.

For more detailed information, refer to UFSAR Section 9.1.4 and Section 9.1.5.

System Operation

Not Required

System Boundary

Not Required

Reason for Scope Determination

Cranes and Hoists meet 10 CFR 54.4(a)(1) because they are a safety-related system that is relied upon to remain functional during and following design basis events. They meet 10 CFR 54.4(a)(2) because failure of nonsafety-related portions of the system could prevent satisfactory accomplishment of function(s) identified for 10 CFR 54.4(a)(1). They do not meet 10 CFR 54.4(a)(3) because Cranes and Hoists are not relied upon in any safety analyses or plant evaluations to perform a function that demonstrates compliance with the Commission's regulation for Fire Protection (10 CFR 50.48), Environmental Qualification (10 CFR 50.49), Anticipated Transients Without Scram (10 CFR 50.62), or Station Blackout (10 CFR 50.63).

System Intended Functions

1. Provides physical support, shelter and protection for safety-related systems, structures, and components (SSCs). The reactor building polar crane is classified as safety-related (seismic category I) and is used to transport heavy loads over the irradiated fuel and above and near safety-related components. 10 CFR 54.4(a)(1)

2. Provides a safe means for handling safety-related components and loads above or near safety-related components. The other in scope cranes and hoists handle loads above or near safety-related components. 10 CFR 54.4(a)(2)

UFSAR References

9.1.4
9.1.5
Table 9.1-10

License Renewal Boundary Drawings

Not Required

Table 2.3.3-8 **Cranes & Hoists**
Components Subject to Aging Management Review

Component Type	Intended Function
Bolting	Structural Support
Crane/Hoist (Bridge / Trolley / Girders)	Structural Support
Crane/Hoist (Jib Crane Columns / Beams / Plates / Anchorage)	Structural Support
Crane/Hoist (Monorail Beams / Lifting Devices / Plates)	Structural Support
Crane/Hoist (Rail System)	Structural Support

The aging management review results for these components are provided in:

Table 3.3.2-8 Cranes & Hoists
Summary of Aging Management Evaluation

2.3.3.9 Equipment and Floor Drainage System

System Purpose

The Equipment and Floor Drainage System is a normally operating mechanical system designed to collect and transfer radioactive and nonradioactive liquid waste for processing or discharge to the cooling tower basin or Delaware River. The Equipment and Floor Drainage System consists of the following plant systems: building and equipment drains, decontamination facilities, building sewage, storm drainage, chemical waste, oily waste, normal drains, floor drain collection, and control rod drive removal and cleaning. The Equipment and Floor Drainage System is in scope for License Renewal. However, major portions of the Equipment and Floor Drainage System are not required to perform intended functions and are not in scope. The Equipment and Floor Drainage System has several interfaces with other systems that are not in the license renewal boundary of the Equipment and Floor Drainage System.

The plant systems that make up the Equipment and Floor Drainage System can be divided into three general groups: Radioactive Waste Drainage Systems, Nonradioactive Waste Drainage Systems, and Sewage and Storm Drainage Systems.

The radioactive waste drainage plant system consists of building and equipment drains, and control rod drive removal and cleaning, with the building and equipment drains consisting of the following subsystems: clean radwaste, dirty radwaste, decontamination radwaste, high conductivity radwaste, and oily radwaste. The radioactive drains transfer the collected water to the Radwaste System (evaluated separately as a license renewal system) for processing.

The nonradioactive waste drainage plant systems consist of chemical waste, oily waste, normal drains and floor drain collection. The nonradioactive drains transfer the collected water to the low volume and oily waste water treatment system, which is part of the Oily Waste system, for processing to meet New Jersey Pollution Discharge Elimination Systems permit limitations prior to discharge to the Delaware River.

The sewage and storm drainage plant systems consist of building sewage and storm drainage. Storm drainage is directed to the Delaware River. Building sewage is transferred to the sewage treatment plant, which is part of the building sewage system, for processing to meet New Jersey Pollution Discharge Elimination Systems permit limitations prior to discharge to the Delaware River.

The purpose of the Equipment and Floor Drainage System is to collect plant effluents and transfer them for the appropriate processing or discharge them to the cooling tower basin or Delaware River. The Equipment and Floor Drainage System accomplishes this purpose through the use of gravity drain lines, sumps, and pumps used to separate waste drainage based on the source point of the drainage. The Equipment and Floor Drainage System is designed to accommodate the volumes of fluids resulting from maintenance activities, system flushing, rinsing operations, and other plant work and is sized to minimize the potential for plant flooding.

No portions of the Equipment and Floor Drainage System are safety related. Portions of the oily waste system, normal drains system, and dirty radwaste subsystem are relied upon to perform a function that demonstrates compliance with the Commission's regulations for Fire

Protection. Portions of the remaining Equipment and Floor Drainage System piping and valves are in the scope of license renewal for spatial interaction only.

System Operation

The Equipment and Floor Drainage System is comprised of collection piping, equipment drains, floor drains, vents, traps, cleanouts, collection sumps, sump pumps, waste treatment components, and associated valves and instrumentation. Each sump, excluding the emergency sump in the Turbine Building, has a duplex pump arrangement. The backup pump starts after the water level rises above the first pump start level. The lead pump is alternated with each pump down cycle.

The plant systems that provide for collection and processing of various liquid wastes operate as listed below:

Radioactive Waste Drainage Systems:

The clean radwaste system collects liquid wastes of high chemical purity from the drywell, Reactor Building, Auxiliary Building, and Turbine Building. The drainage has hard piped connections to equipment drain funnels that convey the wastes by gravity to a sump in the respective enclosure. The sump pumps transfer the collected water to the Radwaste System (evaluated separately as a license renewal system). The drywell and reactor building equipment drain sumps, both portions of the clean radwaste subsystem, have pump out rate and level alarms (evaluated with Leak Detection and Radiation Monitoring System) used to detect reactor coolant pressure boundary leakage.

The dirty radwaste system collects liquid wastes of lower chemical purity from the drywell and the Reactor Building, Auxiliary Building, and Turbine Building. The drainage is collected by floor drains and equipment drain funnels and is conveyed by gravity to a sump in the respective enclosure. In the circulating water area of the turbine building, the floor drain sump is crosstied with the emergency sump to collect a flow rate input higher than the floor drain sump pump discharge capacity. The sump pumps transfer the collected water to the Radwaste System. The drywell and reactor building floor drain sumps, both portions of the dirty radwaste system, have pump out rate and level alarms (evaluated with Leak Detection and Radiation Monitoring System) used to detect reactor coolant pressure boundary leakage. The emergency core cooling system room drains are fitted with check valves in the drain lines that operate to prevent emergency core cooling system room flooding due to backflow through the drain system.

The high conductivity radwaste system collects liquid wastes of high conductivity from the Auxiliary and Turbine Buildings. The drainage is collected by floor drains and equipment drain funnels and is conveyed by gravity to a sump in the respective enclosure. The sump pumps transfer the collected water to the Radwaste System.

The decontamination radwaste system collects corrosive, potentially radioactive liquid wastes from the washdown and decontamination areas in the Reactor Building, Auxiliary Building, and Turbine Buildings and from floor and equipment drain filters, condensate and fuel pool filter demineralizers, and chemistry laboratory drains. The wastes are collected by floor drains and by hard piped connections to equipment drain funnels and are conveyed to the Radwaste System chemical waste tank located in the Auxiliary Building.

The oily radwaste system collects potentially radioactive, oil water mixtures from the reactor feed pump rooms, motor generator set rooms, lube oil reservoir area, lube oil storage tank areas, mezzanine/air equipment area, and lube oil reservoir rooms for the reactor feed pump turbine. The drainage is collected by floor drains and equipment drain funnels and is conveyed to the oil water separator located in the Turbine Building. The separated oil is discharged to 55-gallon drums, and the clarified effluent water is conveyed to the dirty radwaste drainage system in the Turbine Building.

The turbine building circulating water dewatering sump collects drainage that is potentially contaminated with tritium. Following sampling to confirm appropriately low contamination levels this water can be discharged to the cooling tower basin.

Nonradioactive Waste Drainage Systems:

The oily waste drainage system collects liquid wastes from the nonradioactive equipment areas in which oil is expected to be present. These areas include the circulating water pumphouse, Diesel Generator Building, transformer areas, oil circuit breaker areas, and Auxiliary Buildings.

The chemical waste drainage system collects liquid wastes containing nonradioactive chemicals and corrosive substances from equipment and floor drains in the sodium hypochlorite and sulphuric acid/caustic storage tank areas, diesel building HVAC units and chillers, and corridors outside diesel building battery rooms on elevation 163'.

The normal drains and floor drain collection systems collect liquid wastes from the nonradioactive equipment and floor drains. Condensate drainage from four radwaste area supply units may also be collected by the normal waste system.

Oily, chemical, normal drains, and floor drain collection systems drain to the low volume and oily waste treatment system in the yard.

Sewage and Storm Drainage Systems:

The Building Sewage system collects liquid wastes from all plant plumbing fixtures, with the exception of the lavatory basins and showers in the personnel decontamination area. Building Sewage drains to the Sewage Treatment system for treatment and discharge.

Storm drainage systems collect water from precipitation on enclosure roofs, areaways, the ground, and paved and unpaved surfaces outside the buildings. Storm water drains to the Delaware River.

For more detailed information, see UFSAR section 9.3

System Boundary

The Equipment and Floor Drainage System boundary begins with the input to the individual floor, equipment, or storm drains and continues through the collection system piping to the respective sump pump discharge or Radwaste System (radioactive wastes), or to the cooling tower basin or Delaware River (nonradioactive wastes). The boundary also includes the sewage treatment and oily waste processing equipment associated with these waste streams prior to their release.

The Equipment and Floor Drainage System supports the Fire Protection intended function. This portion of the system begins with the individual floor drain in the rooms containing safety-related equipment and continues through gravity drain to a sump in the Reactor Building, Auxiliary Building Control/Diesel Generator Area, or Intake Structure. This portion of the system ends at the respective sump inlet.

Also included in the license renewal scoping boundary of the Equipment and Floor Drainage System are those water filled portions of nonsafety-related piping and equipment located in proximity to equipment performing a safety-related function. This includes the nonsafety-related portions of the system located in the Primary Containment, Reactor Building, Auxiliary Building Control/Diesel Generator Area, and Intake Structure. Included in this boundary are pressure-retaining components relied upon to preserve the leakage boundary intended function of this portion of the system. For more information, refer to the license renewal boundary drawings for identification of this boundary, shown in red.

With the exception of a section of drain piping located in the Auxiliary Building Radwaste Area that is included in scope due to potential spatial interaction with the Remote Shutdown Panel, the remainder of the Equipment and Floor Drainage System piping and components associated with the Turbine Building, Auxiliary Building Service/Radwaste Area, Circulating Water pumphouse, Sewage Treatment system, low volume and oily waste treatment system, and piping not in the vicinity of safety-related equipment are not required to support intended functions. This portion of the Equipment and Floor Drainage System is not included in the scope of license renewal.

Not included in the Equipment and Floor Drainage System license renewal scoping boundary are the following interfacing systems which are separately evaluated as license renewal systems:

Chilled Water System
Circulating Water System
Leak Detection and Radiation Monitoring System
Closed Cycle Cooling Water System
Radwaste System

Reason for Scope Determination

The Equipment and Floor Drainage System does not meet 10 CFR 54.4(a)(1) because no portion of the system is safety-related and relied upon to remain functional during and following design basis events. It meets 10 CFR 54.4(a)(2) because failure of nonsafety-related portions of the system could prevent satisfactory accomplishment of function(s) identified for 10 CFR 54.4(a)(1). It also meets 10 CFR 54.4(a)(3) because it is relied upon in safety analyses and plant evaluations to perform a function that demonstrates compliance with the Commission's regulations for Fire Protection (10 CFR 50.48). The Equipment and Floor Drainage System is not relied upon in any safety analysis or plant evaluations to perform a function that demonstrates compliance with the Commission's regulation for Station Blackout (10 CFR 50.63), Environmental Qualification (10 CFR 50.49), or Anticipated Transient Without Scram (10 CFR 50.62).

System Intended Functions

1. Resist nonsafety related SSC failure that could prevent satisfactory accomplishment of a safety-related function. The Equipment and Floor Drainage System includes nonsafety-related water filled lines in the Primary Containment, Reactor Building and Auxiliary Building Control/Diesel Generator Area that have the potential for spatial interaction (spray or leakage) with safety-related SSCs. 10 CFR 54.4(a)(2)

2. Relied upon in safety analyses or plant evaluations to perform a function that demonstrates compliance with the Commission's regulations for Fire Protection. (10 CFR 50.48) The Equipment and Floor Drainage System is relied upon in the Fire Protection analysis to drain safety-related equipment rooms. 10 CFR 54.4(a)(3)

UFSAR References

1.2
1.8
3.4
5.2
6.2
9.1
9.3.3

License Renewal Boundary Drawings

LR-M-10-1, Sheet 1
LR-M-23-1, Sheet 2
LR-M-25-1, Sheet 1
LR-M-44-1, Sheet 1
LR-M-47-1, Sheet 1
LR-M-61-1, Sheet 1
LR-M-61-1, Sheet 2
LR-M-83-1, Sheet 1
LR-M-84-1, Sheet 1
LR-M-87-1, Sheet 5
LR-M-89-1, Sheet 1
LR-M-94-0, Sheet 1
LR-M-97-0, Sheet 5

Table 2.3.3-9 Equipment and Floor Drainage System Components Subject to Aging Management Review

Component Type	Intended Function
Bolting	Mechanical Closure
Drum Traps	Leakage Boundary
Piping and Fittings	Leakage Boundary
Piping and Fittings	Pressure Boundary
Tanks (Neutralizers and Oil Interceptor)	Leakage Boundary
Valve Body	Leakage Boundary
Valve Body	Pressure Boundary

The aging management review results for these components are provided in:

Table 3.3.2-9 Equipment and Floor Drainage System Summary of Aging Management Evaluation

2.3.3.10 Fire Protection System

System Purpose

The Fire Protection System is a normally operating mechanical system, designed for the rapid detection and suppression of a fire at the plant. The Fire Protection System is in scope for License Renewal. However, portions of the Fire Protection System are not required to perform intended functions and are not in scope.

The Fire Protection System consists of the fire protection water systems, carbon dioxide systems, halon system, foam system, portable fire extinguishers, and fire detection and signaling systems. These systems work in conjunction with the design of the physical plant design features to provide for overall protection for Hope Creek. The physical plant features consist of fire barriers, fire doors and fire rated enclosures.

The purpose of the Fire Protection System is to prevent fires from starting, promptly detect and suppress fires to limit damage, and in the event of a fire allow for safe shutdown to occur. The Fire Protection System accomplishes this purpose by providing fire protection equipment in the form of detectors, alarms, fire barriers and suppression for selected areas of the plant.

The Fire Protection System includes subsystems that can be actuated automatically and/or manually upon detection of a fire. The Hope Creek fire protection water system is physically connected to the Salem fire water protection system by the use of sectionalizing valves. The two systems are normally isolated from each other.

System Operation

The Fire Protection System is comprised of water, carbon dioxide, Halon and foam suppression systems described as follows:

The fire protection water system is supplied by one electric and one diesel driven fire pump, each are full 100% capacity pumps. Both pumps are housed in a building outside of the power block. Within this housing, both pumps are separated by a 3-hour firewall. These pumps are automatically started on low header pressure, and can be manually started remotely from the main control room or locally at the pumps. The diesel driven fire pump has its own fuel supply located next to the pump house. The portion of the fuel supply line from the outdoor tank to the diesel engine is provided with electrical heat tracing. Loss of the electric heat trace on the diesel fire pump fuel supply line does not change the operator response to a fire. The fuel supply is a blended mixture, which is appropriate for this climate to prevent gelling. Therefore, the electric heat trace is not required to support the intended functions of the Fire Protection System and is not included within the scope of license renewal. Both pumps take suction from two fire water storage tanks. Each fire pump has a discharge that connects to the main fire header loop. The pumps, tanks, discharge piping from the pumps, and controls are completely separate and redundant.

A fire jockey pump normally maintains fire water system pressure in the main fire header loop, with the electric and diesel fire pumps maintained in standby. The electric and diesel fire pump discharge lines connect with the underground main fire header loop. The fire header loop encircles the plant and provides fire protection water to the yard fire hydrants, fixed pipe water suppression systems and fire hose stations. The fire water enters the power block at

several locations from branch headers off the main fire header loop. The main fire header loop also supplies remote facilities away from the power block. Some of these locations are not in scope. Sectionalizing valves of the post indicator type are provided on the loop to allow isolation of the various sections for maintenance.

The fire water suppression systems include wet pipe sprinkler and deluge systems, pre-action water spray systems and manual pre-action water spray systems. Hose stations have been provided within the plant buildings and are located such that for safety-related areas of the plant, no single primary piping failure can impair the fire protection water system's ability to provide coverage for a single area. Adjacent area backup hose stations and available pumping capability provide added assurance that areas within the power block can be reached with an effective hose stream after any single piping failure.

A total carbon dioxide flooding system protects the Emergency Diesel Generator Rooms, Emergency Diesel Generator fuel oil storage tank rooms and the control equipment mezzanine. The turbine generator exciter bearings are protected by a separate high-pressure carbon dioxide system. Local temperature sensors actuate all carbon dioxide systems automatically. The carbon dioxide Fire Protection System is in scope for license renewal. However, the carbon dioxide hose reel portions of the carbon dioxide Fire Protection System are permanently valved out of service and are not required to perform intended functions and therefore, are not in scope.

A manually actuated total flooding Halon system provides fire protection for the main control room console and associated pit. Halon storage bottles are not permanently connected to the system discharge piping but stored in a room near the main control room. In the event there is a fire in either the console or pit, which cannot be extinguished by portable fire extinguishers, the Halon storage containers are hooked up to the discharge piping and the system is manually actuated.

A manually actuated mechanical foam system provides fire protection for the fuel oil storage tank located in the yard. A hose connection on the foam header is provided to supply the foam solution from a fire truck to the foam maker mounted onto the fuel oil storage tank.

Portable fire extinguishers are provided at strategic locations throughout Hope Creek and also in the vicinity of all safety-related pumps in accordance with NFPA guidelines. In general, dry chemical type fire extinguishers and carbon dioxide type fire extinguishers are provided at these locations. Pressurized water fire extinguishers are provided in the reactor building and service water intake structure to supplement the normally "dry" standpipe and hose station system in these areas. These extinguishers provide backup fire fighting capability only. Large wheeled dry type fire extinguishers are also available for use on large flammable liquid fires. These wheeled extinguishers are located near pumps that contain a substantial quantity of lubricating oils. These units also provide a supplement to the standpipe and hose station systems in these areas.

Early warning fire and smoke detection and signaling systems provide a means of detecting the presence of a fire and initiating an alarm in the main control room. In addition, some of these fire detection systems will automatically initiate the appropriate fire protection system. There are four types of detectors used at Hope Creek: ionization, flame, photoelectric and thermal detectors. Ionization detectors or incipient fire detectors (IFD) sound an alarm at the presence of invisible combustion products during the incipient stage of fire. Flame detectors respond directly to the infrared radiation emanating from a flame in areas where fire develops

rapidly. Photoelectric smoke detectors, which will respond to visible smoke, are used in areas where fire potential might exist and areas that are exposed to a radiation dose rate greater than that recommended for ionization detectors. Rate compensating thermal detection responds to area high temperature conditions. All of the detectors go to the fire protection status panel located in the main control room. The fire status panel provides an alarm to the main control room.

For more detailed information, see UFSAR Section 9.5 and Appendix 9A.

System Boundary

The boundary of the Fire Protection System begins at the two fire tanks, which supply water to the two 100% capacity pumps and the jockey pump. The discharge from each of the main fire pumps ties into the main fire header loop, which terminates at the suppression systems, hydrants and hose stations. Included in this boundary is a Salem cross connect from the Hope Creek fire protection main fire header loop that is physically connected and isolated from the Salem fire protection yard loop. The main fire header loop continues around the perimeter of the power block, and includes numerous branch lines that supply various sprinkler systems, hose stations and fire hydrants. One branch line connects to the fire protection hose stations and sprinkler systems to the Intake Structure. Sectionalizing post indicator type valves are provided on the main fire header loop to allow isolation of various sections for maintenance.

There are two separate carbon dioxide systems at Hope Creek Generating Station. The first system is for the total flooding carbon dioxide suppression system protecting three fire zones: the emergency diesel generators, emergency diesel generator fuel oil storage tank rooms and control equipment mezzanine areas. This system begins at the 17-ton carbon dioxide storage tank, and continues through the normally closed master control valve to a common distribution header. Each of the three fire zones has a feed distribution header to a normally closed discharge control valve to each room's spray nozzles. The second carbon dioxide system is for the local application of carbon dioxide for the oil piping located inside the main turbine generator exciter housing. The boundary starts at the 4-ton carbon dioxide storage tank and continues through a normally closed master control valve. Upon actuation, the carbon dioxide discharges through the header and into the spray nozzles discharging into the main generator housing.

The boundary for the halon suppression system that protects the main control room console and pit begins with the halon discharge piping including the flexible hose connections and continues through the normally closed discharge control valve. In case of fire, the halon storage cylinders are connected by the use of quick-connect hoses onto the console and pit piping and then to the spray nozzles.

The boundary of the mechanical foam fire protection system begins with the connector that joins the permanent piping to the fire truck and continues to the foam maker located at the fuel oil storage tank. The foam maker discharges directly into the top of the fuel oil storage tank.

Portable fire extinguishers are included in the boundary of this license renewal system scoping evaluation, however a flow path description is not applicable for this self-contained portable equipment. Portable fire extinguishers are provided in accordance with NML, NFPA 10, and OSHA regulations and recommendations. These extinguishers are routinely inspected and replaced by station procedures and are therefore not subject to aging management review.

All associated piping, components and instrumentation contained within the flow path described above are included in the system boundary. Also included in the system boundary are the physical plant design features that consist of fire barrier walls and slabs, fire barriers, fire doors and fire rated enclosures located in the Reactor Building, Auxiliary Building, Turbine Building, and Auxiliary Building Diesel Area and Service Radwaste Building. In addition, dikes around the unit substation transformers and the Fire Pump Diesel Fuel Oil Day Tank are included in the system boundary of the Fire Protection System.

The fire detection and signaling and associated circuitry are evaluated separately as electrical commodities.

Not included in the scope of the license renewal are the piping and components associated with the abandoned construction pumps in the Fire Water Pump House. The construction diesel driven fire pump, construction motor driven and construction service water pumps are isolated from the Fire Protection System by locked closed manual isolation valves and do not support the Fire Protection System's leakage boundary intended function. This portion of the system is nonsafety-related and is not required to function to support any Fire Protection System intended function. Therefore this portion of the Fire Protection System is not required to perform an intended function and is not in the scope of license renewal. Also not included in the scope of the license renewal are the fire protection equipment located in the following area: Circulating Water Pump Structure, Auxiliary Boiler Building, Guardhouse, some portions located in the Administrative Building, Nuclear Annex, and some remote area fire hydrants. These areas do not contain safety related components and are not required to support any Fire Protection System intended functions. Therefore, these portions of the Fire Protection System are not included in the scope of license renewal.

Not included in the Fire Protection System license renewal scoping boundary is the following interfacing systems, which are separately evaluated as a license renewal system:

Compressed Air System
Fresh Water Supply System

Reason for Scope Determination

The Fire Protection System is not in scope under 10 CFR 54.4(a)(1) because no portions of the system are safety-related or relied upon to remain functional during and following design basis events. The Fire Protection System is in scope under 10 CFR 54.4(a)(2) because failure of nonsafety-related portions of the system could prevent satisfactory accomplishment of function(s) identified for 10 CFR 54.4(a)(1). It meets 10 CFR 54.4(a)(3) because it is relied upon in the safety analyses or plant evaluations to perform a function that demonstrates compliance with the Commission's regulations for Fire Protection (10 CFR 50.48). The Fire Protection System is not relied upon in any safety analyses or plant evaluations to perform a function that demonstrates compliance with the Commission's regulation for Environmental Qualification (10 CFR 50.49), Anticipated Transient Without Scram (10 CFR 50.62) or Station Blackout (10 CFR 50.63).

System Intended Functions

1. Resist nonsafety-related SSC failure that could prevent satisfactory accomplishment of a safety-related function. Fire protection piping is located throughout the entire power block (Reactor Building, Auxiliary Building) and located at the Service Water Intake Structure. 10 CFR 54.4(a)(2)

2. Relied upon in safety analysis or plant evaluations to perform a function that demonstrates compliance with the Commission's regulations for Fire Protection (10 CFR 50.48). The Fire Protection System works in conjunction with fire barriers and other plant design features, and established safe shutdown systems and procedures to demonstrate compliance with fire protection regulations. The Fire Protection System provides fire detection, alarms and suppression for vital areas in the plant, to prevent significant release of radioactive material in the event of fire. 10 CFR 54.4(a)(3)

UFSAR References

9.5.1
Appendix 9A

License Renewal Boundary Drawings

LR-M-22-0, Sheet 1
LR-M-22-0, Sheet 2
LR-M-22-0, Sheet 3
LR-M-22-0, Sheet 4
LR-M-22-0, Sheet 5
LR-M-22-0, Sheet 6
LR-M-83-1, Sheet 1
LR-M-84-1, Sheet 1
LR-M-89-1, Sheet 1
LR-M-93-0, Sheet 2

Table 2.3.3-10 Fire Protection System
Components Subject to Aging Management Review

Component Type	Intended Function
Bird Screen (Fire Water Tank Vents)	Filter
Bolting	Mechanical Closure
Concrete Curbs	Direct Flow (Contains Oil Spills)
Damper Housing	Fire Barrier
Damper Housing	Pressure Boundary
Doors	Fire Barrier
Electric Heaters (Fire Water Storage Tank Heaters)	Pressure Boundary
Filter Housing	Pressure Boundary
Fire Barriers (Masonry Walls: Interior)	Fire Barrier
Fire Barriers (Penetration Seals)	Fire Barrier
Fire Barriers (Walls, Ceilings and Floors)	Fire Barrier
Fire Barriers (Wraps)	Fire Barrier
Fire Hydrant	Pressure Boundary
Flame Arrestor	Pressure Boundary
Flow Element	Pressure Boundary
Gas Bottles (Halon)	Pressure Boundary
Hose Manifold	Pressure Boundary
Hoses	Pressure Boundary
Odorizer	Pressure Boundary
Piping and Fittings	Pressure Boundary
Pump Casing (Jockey Pump)	Pressure Boundary
Pump Casing (Motor and Diesel Driven Fire Pumps)	Pressure Boundary
Restricting Orifices	Pressure Boundary
Restricting Orifices	Throttle
Spray Nozzles (Carbon Dioxide)	Spray
Spray Nozzles (Foam)	Spray
Spray Nozzles (Halon)	Spray
Sprinkler Heads	Pressure Boundary
Sprinkler Heads	Spray
Strainer	Filter
Strainer (Fire Pump Suction Strainers)	Filter
Strainer (Fire Water Tank Silt Stop)	Filter
Strainer Body	Pressure Boundary

Component Type	Intended Function
Tanks (CO2- 17 Ton)	Pressure Boundary
Tanks (CO2- 4 Ton)	Pressure Boundary
Tanks (Fire Diesel Fuel Oil)	Pressure Boundary
Tanks (Fire Water)	Pressure Boundary
Tanks (Retarding Chambers)	Pressure Boundary
Thermowell	Pressure Boundary
Valve Body	Pressure Boundary

The aging management review results for these components are provided in:

Table 3.3.2-10 Fire Protection System
Summary of Aging Management Evaluation

2.3.3.11 Fire Pump House Ventilation System

System Purpose

The Fire Water Pump House Ventilation System is an automatic air ventilation system designed to supply sufficient combustion air for the diesel driven fire pump engine. It is also designed to maintain the fire water pump house room air flows and temperatures in the building compartments within acceptable range by the use of louvers, heaters and roof exhaust fans.

The purpose of the Fire Water Pump House Ventilation System is to supply sufficient combustion air for the diesel fire pump. In addition, it maintains building room air temperature above freezing and will limit rise of room temperatures during the summer and maintain the equipment environment within the design temperature limits. The system accomplishes this purpose by utilizing ventilation louvers, electric unit heaters, exhaust fans and associated controls. The diesel driven fire pump compartment louver will open on a diesel driven fire pump engine start. Temperatures are maintained within the fire water pump house through heating using the compartment heaters and cooling using the compartment exhaust fans. The Fire Water Pump House Ventilation System is in scope for license renewal, however a portion of the system is not required to perform an intended function and is not in scope. This portion is the portion of the Fire Water Pump House Ventilation System that services the compartment that contains the abandoned construction diesel driven fire pump. The Fire Water Pump House Ventilation System is a stand-alone system located at the Fire Water Pump House.

System Operation

The Fire Water Pump House Ventilation System is located in the Fire Water Pump House. The Fire Water Pump House has three separate compartments. One compartment contains the Diesel Driven Fire Pump including the batteries required to start the diesel engine. The second compartment contains the full capacity Motor Driven Fire Pump and Jockey Pump. This compartment also contains the abandoned construction motor driven fire pump and construction service water pumps. The third compartment houses the abandoned construction diesel driven fire pump. There are a total of five roof exhaust fans above the three compartments. Two of the roof fans are located above the diesel driven fire pump compartment. Two additional fans are located above the motor driven fire pump and jockey pump compartment. The remaining fan, which is located above the abandoned construction diesel driven fire pump, is not in the scope of license renewal because it does not perform an intended function. Each of the three compartments has individual thermostats that automatically will start and stop the fans on increasing or decreasing compartment temperatures. There are four heaters located in the firewater pump house. One heater is located in the diesel driven fire pump compartment and one located in the abandoned construction diesel driven fire pump compartment. The remaining two heaters are located in the motor driven fire pump and jockey pump compartment. The heater in the compartment where the abandoned Construction diesel driven fire pump is housed is not in the scope of license renewal and does not perform an intended function.

The Fire Water Pump House Ventilation System maintains proper environmental temperature by the use of five exhaust fans that are normally maintained in the "auto" mode. The exhaust fans will ventilate the pump house upon increasing room temperatures as detected by indoor thermal detectors. These fans are mounted flush on the roof and are freestanding ventilators

with installed gravity shutters. Upon decreasing room temperatures the electric unit heaters will energize to prevent freezing. There is no pressure boundary associated with the electric unit heaters. Since there is no pressure boundary or housing associated with the electric unit heaters, this component type is not subject to an aging management review. Separate compartment thermostats within the pump house control the four electric heaters. There are a total of five louvers located on the exterior walls of the Fire Water Pump House. These louvers allow fresh air into the building and supply sufficient combustion air supply to the diesel driven fire pump. Upon a diesel driven fire pump engine start, the diesel driven fire pump engine compartment louver will automatically open, providing the engine with sufficient air for combustion. The one louver that is located on the exterior wall of the compartment that houses the abandoned construction diesel driven fire pump is not in the scope of license renewal and does not perform an intended function.

For more detailed information, see UFSAR Section 9.5.1.

System Boundary

The Fire Water Pump House Ventilation System begins with outside air entering into the building through the installed compartment louvers. The air continues into the room and can flow through the compartment heaters when necessary to prevent freezing. The air then flows through the compartment and up to the ceiling where the air finally exhausts outdoors through the roof exhaust fans.

Not included in the scope of license renewal is the portion of the Fire Water Pump House Ventilation System located in the compartment that contains the abandoned construction diesel driven fire pump. The construction diesel driven fire pump is abandoned equipment that does not perform an intended function and is not in the scope of license renewal. In addition, this compartment does not contain any other component types that are in the scope of license renewal. Therefore, the portion of the Fire Water Pump House Ventilation System that is located in the compartment that contains the abandoned construction diesel driven fire pump does not perform an intended function and is not in the scope of license renewal. This portion of the ventilation system includes one louver, an electric heater and an exhaust fan.

Not included in the scoping boundary of the Fire Water Pump House Ventilation System are the Fire Pump House Structure and Fire Protection System which are separately evaluated as license renewal structure/system:

Fire Water Pump House
Fire Protection System

Reason for Scope Determination

The Fire Water Pump House Ventilation System is not in scope under 10 CFR 54.4(a)(1) because no portions of the system are safety-related or relied on to remain functional during and following design basis events. The Fire Water Pump House Ventilation System is not in scope under 10 CFR 54.4(a)(2) because failure of nonsafety-related portions of the system would not prevent satisfactory accomplishment of function(s) identified for 10 CFR 54.4(a)(1). It meets 10 CFR 54.4(a)(3) because it is relied upon in the safety analysis or plant evaluations to perform a function that demonstrates compliance with the Commission's regulations for Fire Protection (10 CFR 50.48). The Fire Water Pump House Ventilation System is not relied upon in safety analyses or plant evaluations to perform a function that demonstrates compliance

with the Commission's regulations for Environmental Qualification (10 CFR 50.49), Anticipated Transient Without Scram (10 CFR 50.62), or Station Blackout (10 CFR 50.63).

System Intended Functions

1. Relied upon in safety analysis or plant evaluations to perform a function that demonstrates compliance with the Commission's regulations for Fire Protection (10 CFR 50.48). Adequate combustion air supply will be provided in the pump house for diesel engine combustion requirements. Proper temperatures will be maintained in the Fire Water Pump House compartments. This system accomplishes its purpose by use of ventilation exhaust fans, louvers and electric unit heaters. 10 CFR 54.4 (a)(3)

UFSAR References

9.5.1

License Renewal Boundary Drawings

LR-M-81-0, Sheet 1

Table 2.3.3-11 Fire Pump House Ventilation System Components Subject to Aging Management Review

Component Type	Intended Function
Fan Housing	Pressure Boundary
Louver	Pressure Boundary

The aging management review results for these components are provided in:

Table 3.3.2-11 Fire Pump House Ventilation System Summary of Aging Management Evaluation

2.3.3.12 Fresh Water Supply System

System Purpose

The intended function of the Fresh Water Supply System for license renewal is to maintain leakage boundary integrity to preclude system interactions. For this reason, this system's pressure retaining components located in proximity to other components performing safety-related functions have been included in the scope of license renewal. This system is not required to operate to support license renewal intended functions, and is in scope for potential spatial interaction.

The Fresh Water Supply System is a normally operating mechanical system. The purpose of the system is to supply water in sufficient quantities to satisfy the demand for station potable and makeup water, safety showers, eye washes and sanitary water. The license renewal Fresh Water Supply System consists of the fresh water and domestic (potable and sanitary) water plant systems. The portions of the Fresh Water Supply System that are evaluated for license renewal scope are the components in the Auxiliary Building Control/Diesel Generator Area and Reactor Building. The Fresh Water Supply System components that are not in scope are the components located in the Auxiliary Building Service/Radwaste area, Turbine Building or yard areas where there are no safety-related components. The Fresh Water Supply System has no safety-related function.

The Fresh Water Supply System accomplishes it's purpose using wells, pumps, piping, piping components, plumbing fixtures, tanks and valves.

System Operation

The Fresh Water Supply System flow path begins where the fresh water supply system pumps water from the wells to two firewater storage tanks, a fresh water storage tank and two 10,000 gallon domestic water storage tanks in the domestic (potable and sanitary) water systems that are located in the water treatment building. Hookup for portable chlorination is also available at the wellhead. Three pumps draw water from the domestic water storage tanks and discharge it to the domestic water hydropneumatic pressure tank. Under automatic control, the first, second, and third pumps are actuated according to preset levels in the hydropneumatic pressure tank to satisfy the water demand. An air compressor replaces the air in the hydropneumatic tank if the pressure in the tank is less than a predetermined value. The air compressor operates only after the pumps stop at the maximum high water level in the tank. From the hydropneumatic pressure tank, the distribution system supplies the water to plumbing fixtures, laundry rooms, safety showers, eye washes and washing stations where the Fresh Water Supply System flow path ends. The distribution system is routed throughout the Reactor Building, Turbine Building, Auxiliary Building Service/Radwaste Area, and the Auxiliary Building Control/Diesel Area.

The Fresh Water Supply System is not required to operate to support any license renewal intended functions, but is included in the scope of license renewal as the system is liquid filled and portions of the system are located within an area in proximity of components performing a safety-related function. The areas containing safety-related components are the Auxiliary Building Control/Diesel Area and the Reactor Building.

The Fresh Water Supply System components that are not in the scope of license renewal are the components located in the Auxiliary Building Service/Radwaste Area or Turbine Building, where there are no safety-related components, or located in the yard areas.

For more detailed information, see UFSAR Section 9.2.4.

System Boundary

The license renewal scoping boundary of the Fresh Water Supply System encompasses the liquid filled portion of the system that is located in proximity to equipment performing a safety-related function. This includes the liquid filled portions of the Fresh Water Supply System located within the Auxiliary Building Control/Diesel Area and Reactor Building that are in proximity of components performing a safety-related function. Included in this boundary are pressure retaining components relied upon to preserve the leakage boundary intended function of this system. For more information, refer to the license renewal boundary drawing for identification of this boundary, shown in red.

Not included in the scope of license renewal is the portion of the Fresh Water Supply System located in the Turbine Building and Auxiliary Building Service/Radwaste Area, as these portions of the system are not located within an area in proximity of components performing a safety-related function. Not included in this boundary are Fresh Water Supply System components located in bathroom and kitchen areas and storage rooms in the Auxiliary Building Control/Diesel Area because there are no safety-related components in these rooms. Components that are not required to support the system's leakage boundary intended functions are not included in the scope of license renewal.

Not included in the Fresh Water Supply System scoping boundary are the following interfacing systems, which are separately evaluated as license renewal systems:

Auxiliary Steam System
Condensate System
Equipment and Floor Drainage System (Sanitary Waste Disposal System)
Fire Protection System
Makeup Demineralizer System
Radwaste System

Reason for Scope Determination

The Fresh Water Supply System is not in scope under 10 CFR 54.4(a)(1) because no portions of the system are safety-related or relied upon to remain functional during and following design basis events. It meets 10 CFR 54.4(a)(2) because failure of nonsafety-related portions of the system could prevent satisfactory accomplishment of function(s) identified for 10 CFR 54.4(a)(1). The system is not in scope under 10 CFR 54.4(a)(3) because it is not relied upon in safety analyses or plant evaluations to perform a function that demonstrates compliance with the Commission's regulations for Fire Protection (10 CFR 50.48), Environmental Qualification (10 CFR 50.49), Anticipated Transient Without Scram (10 CFR 50.62), or Station Blackout (10 CFR 50.63).

System Intended Functions

1. Resist nonsafety-related SSC failure that could prevent satisfactory accomplishment of a safety-related function. The Fresh Water Supply System has potential for spatial interaction with safety related equipment within the Reactor Building and Auxiliary Building. 10 CFR 54.4(a)(2)

UFSAR References

9.2.4

License Renewal Boundary Drawings

LR-M-98-0, Sheet 1

Table 2.3.3-12 Fresh Water Supply System
Components Subject to Aging Management Review

Component Type	Intended Function
Bolting	Mechanical Closure
Piping and Fittings	Leakage Boundary
Valve Body	Leakage Boundary

The aging management review results for these components are provided in:

Table 3.3.2-12 Fresh Water Supply System
Summary of Aging Management Evaluation

2.3.3.13 Fuel Handling and Storage System

System Purpose

The Fuel Handling and Storage System consists of the spent fuel storage pool and racks, new fuel storage vault and racks, cask loading pit and spent fuel cask, and fuel handling equipment.

The spent fuel storage pool and cask loading pit are enclosed and an integral part of the Reactor Building. The spent fuel storage pool and cask loading pit are reinforced concrete structures, completely lined with seam welded stainless steel liner plate that serves as a watertight barrier. The pool contains high-density stainless steel racks for storage of spent fuel, equipped with Boral poison. The pool is filled with demineralized water, with about twenty-five feet of water covering the spent fuel storage racks for radiation shielding. This provides adequate shielding for normal building occupancy by operating personnel. The Fuel Pool Cooling and Cleanup System maintains water temperature within acceptable limits. That system is evaluated with the license renewal Fuel Pool Cooling and Cleanup System. The spent fuel storage pool communicates with the reactor well through the fuel transfer canal. Removable concrete plugs and gates are inserted in the canal opening to provide a watertight boundary; except during refueling when the reactor well is also flooded for underwater transfer of nuclear fuel. The spent fuel storage pool and the racks are classified as seismic category I structures.

The new fuel storage vault is located within the reactor building adjacent to the spent fuel storage pool. The reinforced concrete vault contains aluminum racks for dry storage of new fuel bundles. The new fuel storage vault and the racks are classified as seismic Category I structures.

Fuel handling equipment consists of the reactor building overhead bridge crane, fuel pool jib cranes, the refueling platform, fuel preparation machines, new fuel inspection stand, and special purpose tools for fuel and reactor servicing.

The reactor building overhead bridge crane is separately evaluated with the license renewal Cranes and Hoists System and is not described herein.

The refueling platform is a motor driven bridge and trolley which traverses the space between the reactor well and the spent fuel storage pool. The bridge travels on rails extending on both sides of the fuel storage pool and the reactor well. The trolley runs on rails located on top of the bridge. The fuel grapple is mounted on the trolley. Two auxiliary hoists are provided on the platform. The hoists are used with an assortment of refueling and component handling tools. Together with the fuel grapple, they perform necessary tasks with irradiated fuel and core components.

Two fuel preparation machines are mounted on the walls of the fuel storage pool. Each fuel preparation machine consists of a work platform, a frame, and a movable carriage. The frame and movable carriage are located below the normal water level in the spent fuel storage pool, thus providing a water shield for the fuel assemblies being handled.

Special purpose tools include control rod grapple tool, control rod latch tool, fuel support installation tool, instrument handling tool, channel bolt wrench, fuel bundle sampler, and other

tools specifically designed for handling nuclear fuel and for servicing reactor vessel internals during an outage.

The purpose of the Fuel Handling and Storage System is to support, transfer, and provide for storage of nuclear fuel in a manner that precludes inadvertent criticality and maintain shielding and cooling of spent fuel. The Fuel Handling and Storage System accomplishes this by spent fuel storage racks designed to maintain fuel in a subcritical configuration having a k(eff) less than or equal to 0.95. To preclude the possibility of raising spent fuel assemblies out of the water, the hoist incorporates redundant electrical limit switches and interlocks that prevent hoisting above the preset limit. In addition, the cables on the auxiliary hoists incorporate adjustable mechanical stops that jam the hoist cable against the hoist structure, which prevents further hoisting, if the limit switch interlock system fails. The special purpose tools facilitate handling and transfer of nuclear fuel, and assembly and disassembly of reactor vessel internals.

Included in the evaluation boundary of the Fuel Handling and Storage System are new and spent fuel storage racks, the refueling platform, fuel preparation machines, fuel pool jib cranes, new fuel inspection stand, and the special purpose tools. New and spent fuel storage racks are in scope of license renewal since they perform a safety-related function. The refueling platform is classified as a seismic category I structure, thus is in scope. The fuel preparation machines, fuel pool jib cranes and new fuel inspection stand are also in scope for license renewal because they are required to maintain structural integrity during a design basis seismic event (seismic II/I) to preclude interaction with nuclear fuel. Special purpose tools are used to support refueling activities, to facilitate transfer of nuclear fuel and to service the reactor vessel internals. They do not perform a license renewal intended function and are not in scope.

Not included in the evaluation boundary of the Fuel Handling and Storage System are the new fuel vault, the spent fuel storage pool and liner plate, cask storage pit and liner plate, gates and plugs, the reactor building overhead bridge crane, and supports for components and tools. The new fuel vault, the spent fuel storage pool and liner plate, cask storage pit and liner plate, and gates and plugs are separately evaluated with the license renewal Reactor Building structure. The reactor building overhead bridge crane is separately evaluated with the license renewal Cranes and Hoists. Supports for components are separately evaluated with the license renewal Component Supports Commodity Group.

For more detailed information, refer to UFSAR Sections 9.1.1, 9.1.2 and 9.1.4.

System Operation

Not Required

System Boundary

Not Required

Reason for Scope Determination

The Fuel Handling and Storage System meets 10 CFR 54.4(a)(1) because it is a safety-related system that is relied upon to remain functional during and following design basis events. It meets 10 CFR 54.4(a)(2) because failure of nonsafety-related portions of the

system could prevent satisfactory accomplishment of function(s) identified for 10 CFR 54.4(a)(1). The Fuel Handling and Storage System is not relied upon in any safety analyses or plant evaluations to perform a function that demonstrates compliance with the Commission's regulations for Fire Protection (10 CFR 50.48), Environmental Qualification (10 CFR 50.49), Anticipated Transients Without Scram (10 CFR 50.62), or Station Blackout (10 CFR 50.63).

System Intended Functions

1. Prevents criticality of fuel assemblies stored in the spent fuel pool. The spent fuel storage racks maintain fuel in a subcritical configuration, with a k(eff) less than or equal to 0.95. 10 CFR 54.4(a)(1)

2. Provides protection for safe storage of new and spent fuel. The spent fuel and the new fuel storage racks provide physical support, shelter and protection for the nuclear fuel. 10 CFR 54.4(a)(1)

3. Resist nonsafety-related SSC failure that could prevent satisfactory accomplishment of a safety-related function. The fuel preparation machines, fuel pool jib cranes, new fuel inspection stand and refueling platform are in scope for license renewal because they are required to maintain structural integrity during a design basis seismic event (Seismic II/I) to preclude interaction with nuclear fuel. 10 CFR 54.4 (a)(2)

UFSAR References

1.1
1.2
9.1

License Renewal Boundary Drawings

Not Required

Table 2.3.3-13 Fuel Handling and Storage System
Components Subject to Aging Management Review

Component Type	Intended Function
Bolting	Structural Support
Crane/hoist (Fuel Preparation Machine and New Fuel Inspection Stand)	Structural Support
Crane/hoist (Grapple/Mast for all bridges)	Structural Support
Crane/hoist (Rail System)	Structural Support
Crane/hoist (Refueling Platform and Jib Crane Columns / Beams / Plates / Anchorage)	Structural Support
Fuel Storage Racks (irradiated fuel)	Absorb Neutrons
Fuel Storage Racks (irradiated fuel)	Structural Support
Fuel Storage Racks (new fuel racks)	Structural Support

The aging management review results for these components are provided in:

Table 3.3.2-13 Fuel Handling and Storage System
Summary of Aging Management Evaluation

2.3.3.14 Fuel Pool Cooling and Cleanup System

System Purpose

The Fuel Pool Cooling and Cleanup System is a normally operating closed loop system designed to remove heat from the fuel storage pool and maintain fuel storage pool water clarity. This scoping evaluation does not include structures such as the fuel storage pool, reactor well, fuel cask storage pit, skimmer surge tanks and dryer-separator storage pool (evaluated with the Reactor Building Structure).

The purpose of the Fuel Pool Cooling and Cleanup System is to remove decay heat from spent fuel assemblies that are stored within the fuel storage pool during all modes of operation, to remove decay heat from the water inventory contained within the reactor well and dryer-separator storage pool during refuel outages, to minimize thermal stresses within the floor and walls of the fuel storage pool and maintain the chemistry of the fuel storage pool water inventory within acceptable EPRI guidelines. It accomplishes this by delivering recirculated water from the fuel pool during normal operation as well as from the reactor well, fuel cask storage pit and dryer-separator storage pool during refueling outage, which is pumped through the Fuel Pool Cooling and Cleanup System heat exchangers and filter-demineralizer system. The Fuel Pool Cooling and Cleanup System heat exchangers then remove the heat from the pools and transfer it to the Closed Cycle Cooling Water System. The heat exchangers are evaluated with the Closed Cycle Cooling Water System. The filter-demineralizer system maintains pool water purity and clarity by a combination of filtration and ion exchange.

The Fuel Pool Cooling and Cleanup System operation is a manually initiated system for spent fuel cooling and cleanup functions.

System Operation

The Fuel Pool Cooling and Cleanup System is comprised of two surge tanks, two half capacity fuel pool cooling water pumps, two half capacity fuel pool heat exchangers, two full capacity fuel pool filter-demineralizers, and a common discharge flow path back to the fuel storage pool diffusers. It also includes associated piping, valves, and instrumentation.

The main flow path of the Fuel Pool Cooling and Cleanup System starts where water from the fuel storage pool overflows via an adjustable weir into two cross-tied skimmer surge tanks (evaluated with the Reactor Building Structure). The skimmer surge tanks drain into a common suction header for the fuel pool cooling pumps. Two parallel flow paths exist from the header, each with a fuel pool cooling pump that takes suction from the header and discharges through heat exchangers. The fuel pool cooling heat exchangers are plate type heat exchangers with a hot and cold side. The hot side of the heat exchanger is the fuel pool cooling process side and the cold side of the heat exchanger is the closed cycle cooling water heat sink side. The heat exchangers are evaluated with the Closed Cycle Cooling Water System. A crosstie line exists on the pump discharge piping in order to operate either pump with either heat exchanger. The heat exchangers discharge into a common header, then through the fuel pool filter-demineralizer. The fuel pool filter-demineralizer discharges back into the fuel storage pool through two lines and diffusers at the bottom of the fuel pool. The filter-demineralizer can be bypassed when there is not an issue with water clarity. The return lines to the fuel storage pool that enter near the top have vacuum breaker vents to act as anti-

siphon devices, to preclude uncontrolled draining of the pool during a pipe break. The fuel pool liner drains are connected to the area under the fuel pool liner for leak detection.

During refueling outages, the reactor well is filled, and the gates are removed between the fuel storage pool and reactor well. The system circulates the fuel storage pool water inventory, as described above, and maintains the fuel storage pool water inventory at a predetermined temperature. Water flows, over two adjustable skimmer weirs located in the fuel storage pool and two skimmer weirs located in the reactor well, into the skimmer surge tanks. The Fuel Pool Cooling and Cleanup System removes decay heat from the spent fuel assemblies that are stored within the fuel storage pool, as well as, decay heat from the water inventory contained within the reactor well and dryer-separator storage pool during refueling operations. The Fuel Pool Cooling and Cleanup System may be aligned by manual valves to discharge into the reactor well and fuel cast storage pit (evaluated with the Reactor Building Structure). The water is pumped through the heat exchanger. Cooling water to the cold side of the heat exchangers is supplied from the Closed Cycle Cooling Water System (evaluated with the Closed Cycle Cooling Water System).

The following components operate only during outage periods; the piping and components downstream of the fuel pool filter-demineralizer outlet header valve because they are normally isolated from the Fuel Pool Cooling and Cleanup System by this normally closed valve, the piping and components associated with the reactor well drains and liner drains.

The Fuel Pool Cooling and Cleanup System can provide additional heat removal capabilities through an interface with the Residual Heat Removal System. In this mode, the Fuel Pool Cooling and Cleanup System may be aligned by manual valves to discharge into the Residual Heat Removal System and cooled water is returned from the Residual Heat Removal System to the Fuel Pool Cooling and Cleanup System into the two diffusers in the fuel storage pool.

In addition to reactor well and dryer-separator storage pools, there is also a fuel cask storage pit. It is used to discharge spent fuel into spent fuel shipping casks. Filling of the cask pool is normally done prior to spent fuel loading into the cask, and draining is normally accomplished after cask loading. The fuel cask storage pit is filled via the refueling fill line and drained through a condensate demineralizer or the fuel pool filter-demineralizers in the same manner as the refueling volume is filled and drained.

Normal makeup to the fuel storage pool is provided from the Condensate Storage Tank. Additional makeup can be provided from the service box for shipping cask washdown through the use of hoses. To prevent loss of Fuel Pool Cooling and Cleanup System cooling due to system water loss, and an unlikely condition where normal makeup is lost, a fuel pool water makeup line from Service Water System loop A or B ties into one of the fuel pool cooling and cleanup return lines immediately upstream of the point where it enters the fuel storage pool.

For more detailed information, see UFSAR Section 9.1.3.

System Boundary

During normal plant operations, the boundary of the Fuel Pool Cooling and Cleanup System begins at the attachment point of the suction piping to the skimmer surge tanks. It continues through the Fuel Pool Cooling and Cleanup System pumps, heat exchangers, filter-demineralizers and associated piping and valves, to the bottom of the fuel storage pool via

diffusers. The water spills over the fuel storage pool weirs and continuous to the attachment point of the skimmer surge tanks.

During refueling operations, the boundary begins at the attachment point of the suction piping to the skimmer surge tanks through the fuel pool cooling pumps and fuel pool cooling heat exchanger and returns to the common discharge flow path downstream of the filter-demineralizers. Included in the boundary is the piping that discharges into reactor well, fuel cask storage pit and fuel storage pool. When the removable blocks and gates are removed, water can flow from the reactor well to the dryer-separator storage, fuel cast storage pit, and fuel storage pools. Water returns to the skimmer surge tanks over the weirs in the fuel storage pool and through skimmer drain headers located in the reactor well and dryer-separator storage pool.

All associated piping, components and instrumentation contained within the flow paths described above are included in the system evaluation boundary.

Also included in the license renewal scoping boundary of the Fuel Pool Cooling and Cleanup System are those portions of nonsafety-related piping and equipment that extend beyond the safety-related/nonsafety-related interface up to the location of the first seismic anchor, or to a point no longer in proximity to equipment performing a safety-related function, whichever extends furthest. This includes the nonsafety-related portions of the system located within the Reactor Building. Also included in this boundary are pressure-retaining components located in the Reactor Building relied upon to preserve the leakage boundary intended function of the system. For more information, refer to the license renewal boundary drawing for identification of this boundary, shown in red.

The following items are not required for the cooling flow path for the Fuel Pool Cooling and Cleanup System but are included in the Fuel Pool Cooling and Cleanup System scoping boundary: skimmer drain header, storage pool drains and spent fuel pool liner drains.

Not included in the scoping boundary of the Fuel Pool Cooling and Cleanup System license renewal are items such as reactor well to dryer-separator pool gate, fuel cask storage pit to fuel storage pool gate, reactor well to fuel storage pool gate and associated gate seals, reactor well, skimmer surge tank, dryer-separator storage pool, fuel storage pool, fuel cast storage pit and their supporting structures, which are separately evaluated in the Reactor Building structure.

Not included in the Fuel Pool Cooling and Cleanup System license renewal scoping boundary are the following interfacing systems, which are separately evaluated as license renewal systems:

Service Water System
Compressed Air System
Condensate Storage and Transfer System
Closed Cycle Cooling Water System
Residual Heat Removal System
Radwaste System
Reactor Building
Torus Water Cleanup System
Process and Post Accident Sampling System

The Fuel Pool Cooling and Cleanup System supports the spent fuel pool cooling intended functions. This portion of the system includes a flow path from the fuel storage pool cooling skimmer surge tank continuing through the fuel pool cooling pumps and heat exchangers but allows bypass of the filter-demineralizers so that flow can be returned to the fuel storage pool. This closed loop flow path through the Fuel Pool Cooling and Cleanup System heat exchangers, which is cooled by Closed Cycle Cooling Water System, ensures the Fuel Pool Cooling and Cleanup System will perform this systems intended function. The heat exchangers are evaluated with the Closed Cycle Cooling Water System.

Reason for Scope Determination

The Fuel Pool Cooling and Cleanup System meets 10 CFR 54.4(a)(1) because it is a safety-related system that is relied upon to remain functional during and following design basis events. It meets 10 CFR 54.4(a)(2) because failure of non-safety-related portions of the system could prevent satisfactory accomplishment of function(s) identified for 10 CFR 54.4(a)(1). It also meets 10 CFR 54.4(a)(3) because it is relied upon in the safety analyses or plant evaluations to perform a function that demonstrates compliance with the Commission's regulation for Environmental Qualification (10 CFR 50.49). The Fuel Pool Cooling and Cleanup System is not relied upon in any safety analyses or plant evaluations to perform a function that demonstrates compliance with the Commission's regulation for Fire Protection (10 CFR 50.48), Anticipated Transient Without Scram (10 CFR 50.62), or Station Blackout (10 CFR 50.63).

System Intended Functions

1. Ensure adequate cooling in the spent fuel pool to maintain stored fuel within acceptable temperature limits. The Fuel Pool Cooling and Cleanup System operates continuously to circulate and cool the fuel pool water inventory and maintain the water inventory at a predetermined temperature. 10 CFR 54.4 (a)(1)

2. Resist nonsafety-related SSC failure that could prevent satisfactory accomplishment of a safety related function. The system contains nonsafety-related piping that has the potential to spatially and structurally interact with safety-related portions of this and other systems. 10 CFR 54.4(a)(2)

3. Relied upon in the safety analyses or plant evaluations to perform a function that demonstrates compliance with the Commission's regulation for Environmental Qualification (10 CFR 50.49). The Fuel Pool Cooling and Cleanup System includes components that are environmentally qualified. 10 CFR 54.4(a)(3)

UFSAR References

9.1.3

License Renewal Boundary Drawings

LR-M-08-0, Sheet 2
LR-M-10-1, Sheet 2
LR-M-44-1, Sheet 1
LR-M-51-1, Sheet 1
LR-M-51-1, Sheet 2
LR-M-53-1, Sheet 1
LR-M-53-1, Sheet 2

Table 2.3.3-14 Fuel Pool Cooling and Cleanup System Components Subject to Aging Management Review

Component Type	Intended Function
Bolting	Mechanical Closure
Diffuser	Direct Flow
Flow Element	Leakage Boundary
Flow Element	Pressure Boundary
Heat Exchanger Components (Fuel Pool Cooling and Cleanup)	Evaluated with the Closed Cycle Cooling Water System
Piping and Fittings	Leakage Boundary
Piping and Fittings	Pressure Boundary
Pump Casing (Fuel Pool Cooling Pump)	Pressure Boundary
Restricting Orifices	Pressure Boundary
Restricting Orifices	Throttle
Spray Nozzles (Fuel Storage Pool)	Spray
Thermowell	Pressure Boundary
Valve Body	Leakage Boundary
Valve Body	Pressure Boundary
Weir	Direct Flow

The aging management review results for these components are provided in:

Table 3.3.2-14 Fuel Pool Cooling and Cleanup System Summary of Aging Management Evaluation

2.3.3.15 Hardened Torus Vent System

System Purpose

The Hardened Torus Vent System is a hard piped vent system designed for venting the Primary Containment during severe accident sequences.

The purpose of the Hardened Torus Vent System is to vent the Primary Containment from the torus during severe accident sequences that involve loss of normal decay heat removal capability. The Hardened Torus Vent System accomplishes this purpose by providing a vent path from the torus to the environment through the containment prepurge cleanup system return header from the torus. This portion of the containment prepurge cleanup system is part of the Containment Inerting and Purging System.

The Hardened Torus Vent System is only used for conditions beyond the design basis events.

System Operation

The Hardened Torus Vent System is comprised of a hard pipe installed off of the containment prepurge cleanup system return header from the torus. Primary containment venting from the Hardened Torus Vent System is through a bypass line off of the containment prepurge cleanup system return header from the torus, which is located in between two containment isolation valves, through the isolation valve located on the hardened vent line, through a rupture disk, and to the environment at an elevated release point along the Reactor Building exterior cylindrical wall. Operation of the system from either the main control room or locally is performed manually in accordance with station abnormal operating procedures. Operation of the system requires opening of both the upstream containment isolation valve located on the containment prepurge cleanup system return header and the isolation valve located on the hardened vent line. Opening of these valves from the main control room can be performed when compressed air and power are available. A manual jack station located locally, outside the Primary Containment, provides for opening of these valves when power or compressed air is not available.

The Hardened Torus Vent System is designed for the mitigation of severe accident sequences that are beyond the design basis accidents in which decay heat removal capability is unavailable.

The torus was chosen as the vent path because of the beneficial scrubbing effect of the torus water. A rupture disk on the hardened vent line ensures that inadvertent opening of the vent line isolation valve will not result in radiation release to the environment.

For more detailed information, see UFSAR Section 6.2.5.

System Boundary

The Hardened Torus Vent System boundary begins at an attachment point on the containment prepurge cleanup system return header, in between the two containment isolation valves within the torus room. The boundary continues through a twelve inch pipe and through an isolation valve, through a set of radiation detectors, followed by a rupture disk and the

boundary terminates at an elevated release point in the environment along the Reactor Building exterior cylindrical wall.

Included in the license renewal scoping boundary of the Hardened Torus Vent System are those portions of nonsafety-related piping and equipment that extend beyond the safety-related and nonsafety-related interface up to the location of the first seismic anchor. Included in this boundary are components relied upon to preserve the structural support intended function of this portion of the system. For more information, refer to the license renewal boundary drawing for identification of this boundary, shown in red. Not included in the scope of license renewal is the portion of Hardened Torus Vent System located above the plant ground level, as this portion of the system is located beyond the seismic anchor point.

Not included in the Hardened Torus Vent System license renewal scoping boundaries are the following systems or structures, which are separately evaluated as license renewal systems or structures:

Containment Inerting and Purging System
Reactor Building Ventilation System (containment prepurge cleanup system)
Primary Containment
Reactor Building
Compressed Air System (plant instrument air system)

The Hardened Torus Vent System is designed for mitigation of severe accident sequences that are beyond the design basis accident. Beyond design basis accident events are not considered for license renewal scoping.

Reason for Scope Determination

The Hardened Torus Vent System meets 10 CFR 54.4(a)(1) because it is a safety-related system that is relied upon to remain functional during and following design basis events. It meets 10 CFR 54.4(a)(2) because failure of nonsafety-related portions of the system could prevent satisfactory accomplishment of function(s) identified for 10 CFR 54.4(a)(1). The Hardened Torus Vent System meets 10 CFR 54.4(a)(3) because it is relied upon in safety analyses or plant evaluations to perform a function that demonstrates compliance with the Commission's regulations for Environmental Qualification (10 CFR 50.49). The Hardened Torus Vent System is not relied upon in any safety analyses or plant evaluations to perform a function that demonstrates compliance with the Commission's regulation for Fire Protection (10 CFR 50.48), Anticipated Transient Without Scram (10 CFR 50.62), or Station Blackout (10 CFR 50.63).

System Intended Functions

1. Provide primary containment boundary. The Hardened Torus Vent System is equipped with a primary containment isolation valve. 10 CFR 54.4 (a)(1)

2. Resist nonsafety-related SSC failure that could prevent satisfactory accomplishment of a safety-related function. Portions of the Hardened Torus Vent System within the Reactor Building are nonsafety-related and provide structural support for attached safety-related piping. 10 CFR 54.4(a)(2)

3. Relied upon in safety analyses or plant evaluations to perform a function that demonstrates compliance with the Commission's regulations for Environmental Qualification (10 CFR 50.49). The limit switches associated with the primary containment isolation valves within the Hardened Torus Vent System are environmentally qualified. 10 CFR 54.4(a)(3)

UFSAR References

3.11
11.5.2.2.21
18.2.2
6.2.4.3.5

License Renewal Boundary Drawings

LR-M-57-1, Sheet 1

Table 2.3.3-15 Hardened Torus Vent System
Components Subject to Aging Management Review

Component Type	Intended Function
Bolting	Mechanical Closure
Piping and Fittings	Pressure Boundary
Piping and Fittings	Structural Support
Valve Body	Pressure Boundary

The aging management review results for these components are provided in:

Table 3.3.2-15 Hardened Torus Vent System
Summary of Aging Management Evaluation

2.3.3.16 Hydrogen Water Chemistry System

System Purpose

The intended function of the Hydrogen Water Chemistry System for license renewal is to maintain leakage boundary integrity to preclude system interactions. This system's pressure retaining components located in proximity to other components performing safety-related functions have been included in the scope of license renewal. This system is not required to operate to support license renewal intended functions, and is in scope for potential spatial interaction. The portions of the Hydrogen Water Chemistry System in scope are the components in the Reactor Building.

The Hydrogen Water Chemistry System consists of the following subsystems: hydrogen injection, oxygen injection, reactor recirculation hydrogen and oxygen analyzer panel and crack monitoring. The only portion of the Hydrogen Water Chemistry System that is in the Reactor Building and is in scope for potential spatial interaction is the reactor recirculation hydrogen and oxygen analyzer panel and crack monitoring subsystems. The hydrogen injection and oxygen injection subsystems are not in scope for potential spatial interaction, since the components for these subsystems are located in the turbine building or yard areas.

The purpose of the Hydrogen Water Chemistry System is to reduce the potential for intergranular stress corrosion cracking and flow-assisted corrosion. It accomplishes this by injecting hydrogen to reduce the potential for intergranular stress corrosion cracking, injecting oxygen to reduce flow-assisted corrosion, and monitoring for the concentration of dissolved hydrogen and oxygen in the reactor recirculation system.

System Operation

Reactor Recirculation Hydrogen and Oxygen Analyzer Panel Subsystem

The Hydrogen Water Chemistry System includes a reactor recirculation hydrogen and oxygen analyzer panel subsystem for dissolved hydrogen and dissolved oxygen. The Hydrogen Water Chemistry System reactor recirculation hydrogen and oxygen analyzer panel normal flow path begins downstream of process sampling system needle valve at the process sampling station in the Reactor Building and goes through six way valves and hydrogen and oxygen sensors in the filtration recirculation ventilation system vent room before being pumped back to the building and equipment drain system in Reactor Building where the system ends. The components for this plant system are enclosed in NEMA Type 12 electrical enclosures except the inlet line with a water bath and outlet line to the building and equipment drain system. There are also branch lines for calibration gas inlet and vent to the hydrogen and oxygen analyzer absorption column. This subsystem consists of an absorption column, vessels, instruments, pipes, tubes and valves.

This subsystem is not required to operate to support license renewal intended functions, but is included in the scope of license renewal as this liquid filled subsystem is located within an area in proximity of components performing a safety related function. This subsystem is located in the Reactor Building. However, the portion of the Hydrogen Water Chemistry System hydrogen and oxygen analyzer panel components that is contained within a NEMA 12 enclosure are not in scope since this enclosure will prevent spatial interaction with safety

related components. The branch lines for calibration gas inlet and vent are not in the scope of license renewal as they are gas filled and not liquid or steam filled.

Crack Monitoring Subsystem

The Hydrogen Water Chemistry System also includes a crack monitoring subsystem that is isolated and no longer in use. The Hydrogen Water Chemistry System crack monitoring system begins at the tee from the process sampling system in the Reactor Building sample station room and goes through the crack growth pressure vessel and a electrochemical potential pressure vessel in parallel with a bypass line around these vessels. The license renewal boundary for this system ends upstream of the flow element which provides an input signal to the reactor water cleanup differential flow detector. The flow element for reactor water cleanup differential flow leak detection system is evaluated with the license renewal Reactor Water Cleanup System.

This subsystem is not required to operate to support license renewal intended functions, but is included in the scope of license renewal as this liquid-filled subsystem is located within an area in proximity of components performing a safety-related function. This subsystem is located in the reactor building.

Hydrogen Injection Subsystem

The Hydrogen Water Chemistry hydrogen injection subsystem is provided for injecting gaseous hydrogen to provide intergranular stress corrosion cracking (IGSCC) protection of the recirculation piping.

This subsystem is not required to operate to support license renewal intended functions, and is not included in the scope of license renewal as this liquid filled subsystem is not located within an area in proximity of components performing a safety-related function. This subsystem is located in the Turbine Building or yard areas.

Oxygen Injection Subsystem

The Hydrogen Water Chemistry oxygen injection subsystem is provided to ensure that sufficient oxygen is present in the gaseous radwaste system to combine with the excess hydrogen. The oxygen injection subsystem injects oxygen upstream of the offgas recombiners to maintain the stoichiometric balance of oxygen and hydrogen. In order to maintain the desired dissolved oxygen level in the feedwater, a supplemental oxygen injection system (oxygen gas bottles) is also installed to reduce the potential for flow-assisted corrosion. This subsystem is not required to operate to support license renewal intended functions and is not in scope for potential spatial interaction, since the components for this subsystem are located in the Turbine Building or yard areas.

This subsystem is not required to operate to support license renewal intended functions, and is not included in the scope of license renewal as this liquid filled subsystem is not located within an area in proximity of components performing a safety-related function. This subsystem is located in the Turbine Building or yard areas.

For more detailed information, see UFSAR Sections 5.2.3.2, 9.5.1.1.11, 10.4.7.2.1 and 11.3.2.1.

System Boundary

The license renewal scoping boundary of the Hydrogen Water Chemistry System encompasses the liquid filled portion of the system that is located in proximity to equipment performing a safety-related function. This includes the liquid filled portions of the Hydrogen Water Chemistry System located within the Reactor Building. Included in this boundary are pressure retaining components relied upon to preserve the leakage boundary intended function of this system. For more information, refer to the license renewal boundary drawing for identification of this boundary, shown in red. Components that are not required to support the leakage boundary intended function are not included in the scope of license renewal.

Not included in the scope of license renewal is the portion of the Hydrogen Water Chemistry System hydrogen and oxygen analyzer panel components that are contained within a NEMA type 12 electrical enclosure, as this panel is nonsafety-related and physically shielded and does not have the potential for spatial interaction with components performing a safety-related function. Also not included in the scope of license renewal are the hydrogen injection and oxygen subsystems, as they are nonsafety-related and physically located in the Turbine Building and yard areas that do not have components performing a safety-related function.

Not included in the Hydrogen Water Chemistry System scoping boundary are the following interfacing systems, which are separately evaluated as license renewal systems:

Compressed Air System
Condensate System
Equipment and Floor Drainage System
Main Condenser Air Extraction System
Process and Post-Accident Sampling System
Reactor Water Cleanup System

Reason for Scope Determination

The Hydrogen Water Chemistry System is not in scope under 10 CFR 54.4(a)(1) because no portions of the system are safety-related or relied on to remain functional during and following design basis events. It meets 10 CFR 54.4(a)(2) because failure of nonsafety-related portions of the system could prevent satisfactory accomplishment of function(s) identified for 10 CFR 54.4(a)(1). The system is not in scope under 10 CFR 54.4(a)(3) because it is not relied upon in safety analyses or plant evaluations to perform a function that demonstrates compliance with the Commission's regulations for Fire Protection (10 CFR 50.48), Environmental Qualification (10 CFR 50.49), Anticipated Transients Without Scram (10 CFR 50.62), or Station Blackout (10 CFR 50.63).

System Intended Functions

1. Resist nonsafety-related SSC failure that could prevent satisfactory accomplishment of a safety-related function. The Hydrogen Water Chemistry System has potential for spatial interaction with safety-related equipment within the Reactor Building. 10 CFR 54.4(a)(2)

UFSAR References

5.2.3
9.5.1
10.4.7
11.3.2

License Renewal Boundary Drawings

LR-M-23-1, Sheet 2
LR-M-101-0, Sheet 3
LR-M-101-0, Sheet 4

Table 2.3.3-16 Hydrogen Water Chemistry System
Components Subject to Aging Management Review

Component Type	Intended Function
Bolting	Mechanical Closure
Flow Element	Leakage Boundary
Heat Exchanger Components (Sample Cooler 433)	Leakage Boundary
Piping and Fittings	Leakage Boundary
Tanks (CAV)	Leakage Boundary
Tanks (ECP)	Leakage Boundary
Valve Body	Leakage Boundary

The aging management review results for these components are provided in:

Table 3.3.2-16 Hydrogen Water Chemistry System
Summary of Aging Management Evaluation

2.3.3.17 Leak Detection and Radiation Monitoring System

System Purpose

The Leak Detection and Radiation Monitoring System is a normally operating instrumentation system that detects leaks from the reactor coolant pressure boundary and other plant systems as well as assesses overall plant radiological conditions at the facility. In addition, this system also detects the radiation level and the release of radioactivity in key locations throughout the plant.

The Leak Detection and Radiation Monitoring System is in the scope of license renewal. However, major portions of the system are not required to perform license renewal intended functions and are not in scope. The Leak Detection and Radiation Monitoring System has several interfacing systems that are not in the license renewal boundary of the Leak Detection and Radiation Monitoring System.

The Leak Detection and Radiation Monitoring System consists of the following two plant systems: leak detection plant system and radiation monitoring plant system.

The purpose of the leak detection plant system is to detect leaks and provide alarms at established leakage rate limits so that the affected system can be isolated if necessary. To accomplish this purpose, this system directly monitors the drywell for reactor coolant pressure boundary leakage as required by Regulatory Guide 1.45 and indirectly detects leakage from the reactor coolant pressure boundary and from other systems by monitoring the process variables.

The purpose of the radiation monitoring plant system is to detect the release of radioactivity, to monitor radiation levels and to provide alarms so that the general public and plant personnel can be protected from exposures in excess of those allowed by the applicable regulations. The system accomplishes this purpose by utilizing radiation detectors and associated instrumentation to monitor and indicate the radiation levels.

System Operation

Leak Detection Plant System

The leak detection plant system is comprised of instrumentation components including temperature sensors, flow elements, level elements, level transmitters, radiation monitors, acoustic sensors, pressure differential transmitters, flow transmitters, timers and associated tubing and valves. This system consists of two subsystems. The first subsystem, primary leak detection, monitors the drywell for reactor coolant pressure boundary leakage as required by Regulatory Guide 1.45. The second subsystem, secondary leak detection, indirectly detects leakage from the reactor coolant pressure boundary and from other systems by monitoring the process variables.

The primary leak detection subsystem includes the drywell leak detection radiation monitor, liquid leakage detection monitor and steam leakage detection monitor. The drywell leak detection radiation monitor is designed to measure the changes in the level of gaseous radioisotopes for the indication of leakage. This system operates by drawing samples of the drywell atmosphere continuously through a radioactive gas sampler that continuously monitors

the beta radiation. It also detects noble gases, which would be outgased from the primary coolant in the event of a boundary leak, thus indicating the presence of reactor coolant pressure boundary leakage. The radioactive gas sampler is connected to a local processor that performs radioactivity calculations. The sample flow then proceeds through the flow control devices and vacuum pump, and is discharged back to the Primary Containment. A high level of radioactivity will activate an alarm in the Main Control Room.

The liquid leakage detection monitor measures the drywell sump level for the liquid inventories in the drywell equipment drain sump and the drywell floor drain sump. A level transmitter is located in the drywell floor drain sump and drywell equipment drain sump. A level change in the sumps is converted to a flow rate by a microprocessor. Any change in the flow rate that exceeds the pre-established limit will activate an alarm in the Main Control Room. High level in the sumps and excessive pump running time will also activate an alarm in the Main Control Room. The sump pumps start automatically when a preset high water level is reached. They stop at a preset low water level. The sump pumps are evaluated in the Equipment and Floor Drainage license renewal system. The steam leakage detection monitor measures the liquid runoff from drywell cooler units. Two flow transmitters are used in the drywell air coolers condensate flow monitoring system. Each transmitter sends signals to a local processor, which calculates and determines the flow rate in the system. If a predetermined flow rate is exceeded, an alarm in the Main Control room is activated.

The secondary leak detection subsystem monitors leakage from the reactor coolant pressure boundary and other systems. When plant system leakage occurs on a system, such as RCIC, HPCI, RHR, RWCU, Main Steam, or Core Spray, the leakage can be detected through monitoring the process variables (e.g., ambient temperature, pressure, pressure differential, flow rate) with instruments such as temperature sensors, temperature elements, pressure transmitters, flow transducers, flow sensors, water level transmitters and associated switches. Flooding in pump rooms for various systems such as RCIC, HPCI, RHR, RWCU, Core Spray and SACS is also detected and alarmed with the use of water level switches and associated instrumentation. Some monitors also initiate actions such as system isolation.

Radiation Monitoring Plant System

The radiation monitoring plant system is comprised of the process radiation monitoring subsystem and the area radiation monitoring subsystem.

The process radiation monitoring subsystem consists of safety-related and nonsafety-related monitors. These monitors include the radiation monitoring system (RMS) for the following plant systems and processes:

Main steam line RMS
Refueling floor exhaust RMS
Reactor building ventilation and exhaust RMS
Control room ventilation RMS
Drywell atmosphere post-accident RMS
North plant vent RMS
South plant vent RMS
Filtration, recirculation, and ventilation RMS
Cooling tower blowdown RMS
Liquid radwaste RMS
Off-gas and off-gas treatment RMS

Turbine building compartment and exhaust RMS
Radwaste and gaseous radwaste exhaust RMS
Technical support center ventilation RMS
Drywell leak detection RMS
Reactor auxiliaries cooling system RMS
Safety auxiliaries cooling system RMS
Heating steam condensate RMS
Turbine building circulating water RMS
Hardened torus vent RMS

The process radiation monitoring subsystem monitors either directly utilize radiation detectors located inside or adjacent to the process piping being monitored, or utilize a sample piping system to extract and transport a sample to a monitoring station. All monitors interface with annunciator systems and dedicated displays to present radiological information to plant personnel. When the radioactivity in certain monitored systems exceeds established operating limits, the related process radiation monitoring subsystems provide alarms to plant operators. Some monitors also provide actions such as automatic isolation and system trip.

The safety auxiliaries cooling system (SACS) radiation monitor includes a sample chamber that is part of the SACS system pressure boundary, and this monitor is evaluated with the Closed Cycle Cooling Water System for aging management review. All other radiation monitors utilize radiation detectors located inside or adjacent to the process or sample piping being monitored, and do not have a pressure boundary intended function and are therefore considered active and not subject to aging management review.

The process radiation monitoring subsystem monitors that utilize a mechanical piping sampling system to extract a sample from the process for transport to the monitoring stations are north plant vent RMS, south plant vent RMS, filtration recirculation and ventilation RMS, hardened torus vent RMS, off-gas RMS, drywell leak detection RMS, reactor auxiliaries cooling system RMS and safety auxiliaries cooling system RMS. All of these monitors except the drywell leak detection monitor and the safety auxiliaries cooling system monitor are nonsafety-related. These nonsafety-related monitors do not support a license renewal intended function, and are not included in the scope of license renewal. The drywell leak detection monitor and safety auxiliaries cooling system monitor support a license renewal intended function, and are included in the scope of license renewal. The sample piping to and from the drywell leak detection monitor is evaluated for license renewal scoping with the leak detection plant system previously discussed in this license renewal scoping evaluation. The sample piping to and from the safety auxiliaries cooling system monitor is not included in this scoping evaluation but is evaluated separately for license renewal with the Closed Cycle Cooling Water System.

The area radiation monitoring subsystem consists of various area radiation monitors that are located throughout the plant. Each monitor is comprised of one or two radiation detectors, an associated local radiation processor, and a local indicator unit. The detectors are wall mounted and are located so that the radiation flux measurement is as representative as possible of the area. The monitor interfaces with annunciator systems and dedicated displays to present information on the area to plant personnel, locally and at selected points in the plant. When the radiation level in any monitored area exceeds established limits, the area radiation monitoring system supplements the personnel and area radiation survey provisions of the plant radiation protection program to ensure compliance with the applicable regulatory guidelines on personnel exposure. These devices are nonsafety-related. The area radiation

monitoring subsystem has no function related to the safe shutdown of the plant. The area radiation monitoring subsystem does not support a license renewal intended function and is not included in the scope of license renewal.

For more detailed information, see UFSAR Sections 11.5 and 12.3.4.

System Boundary

Leak Detection Plant System

The leak detection plant system consists of the primary leak detection and secondary leak detection subsystems. The primary leak detection subsystem directly monitors leakage through the drywell leak detection radiation monitor, liquid leakage detection monitor and steam leakage detection monitor. The secondary leak detection subsystem utilizes various instruments and associated circuitry to monitor process variables for leakage detection.

The boundary for the drywell leak detection radiation monitor begins at the sample supply attachment point to the drywell, and continues through the filter, radiation gas sampler, pump, radiation detector and then ends at the sample return attachment point to the drywell. The boundary includes all associated piping, components and instrumentation in the sampling flow path described above. Included in the scope for license renewal is the safety-related supply and return sample piping from the containment penetrations to the associated containment isolation valves. Not included in scope is the remainder of the boundry described above as that portion of the system provides a monitoring and alarm function only.

The boundary for the liquid leakage detection monitoring systems consists of instruments and associated circuitry, and a mechanical boundary description is not applicable. The piping and components for drywell equipment and floor drainage are evaluated separately for license renewal with the Equipment and Floor Drainage license renewal system.

The boundary for the steam leakage detection begins at the liquid runoff point from the drywell cooler units, continues through the flow element, and ends at the open pipe to the floor drain.

The secondary leak detection subsystem consists of instruments and associated circuitry, and a mechanical boundary description is not applicable. The various flow elements and other process sensing devices that are associated with the monitored system pressure boundary are evaluated with the respective system.

Radiation Monitoring Plant System

The majority of the radiation monitoring plant system consists of radiation detectors and associated circuitry, and a mechanical boundary description is not applicable. Some portions of the system utilize sample piping to transport samples to monitoring stations. These portions are not included in the scope of license renewal except for the sampling systems associated with the SACS RMS and the Drywell Leak Detection RMS. The SACS sample piping is not included in this scoping evaluation but is evaluated separately for license renewal with the Closed Cycle Cooling Water System. The Drywell Leak Detection sample piping is evaluated in this scoping evaluation with the leak detection plant system.

Included in the license renewal scoping boundary of the Leak Detection and Radiation Monitoring System are those portions of nonsafety-related piping and equipment that extend

beyond the safety-related/nonsafety-related interface up to the location of the first seismic anchor. Included in this boundary are components relied upon to preserve the structural support intended function of this portion of the system. Also included in the license renewal scoping boundary are those portions of nonsafety-related piping and equipment located in proximity to equipment performing a safety-related function. This includes the nonsafety-related portions of the system located within the Primary Containment. Included in this boundary are pressure retaining components relied upon to preserve the leakage boundary intended function of these portions of this system. For more information, refer to the license renewal boundary drawing for identification of this boundary, shown in red.

Not included in the Leak Detection and Radiation Monitoring System license renewal scoping boundary are the following interfacing systems, which are separately evaluated as a license renewal system:

Reactor Core Isolation Cooling System
High Pressure Coolant Injection System
Main Steam System
Reactor Water Cleanup System
Closed Cycle Cooling Water System
Nuclear Boiler Instrumentation System
Residual Heat Removal System
Core Spray System
Drywell Air Cooling System

Reason for Scope Determination

The Leak Detection and Radiation Monitoring System meets 10 CFR 54.4(a)(1) because it is a safety-related system that is relied upon to remain functional during and following design basis events. It meets 10 CFR 54.4(a)(2) because failure of nonsafety-related portions of the system could prevent satisfactory accomplishment of function(s) identified for 10 CFR 54.4(a)(1). It also meets 10 CFR 54.4(a)(3) because it is relied upon in safety analyses or plant evaluations to perform a function that demonstrates compliance with the Commission's regulation for Fire Protection (10 CFR 50.48), Environmental Qualification (10 CFR 50.49) and Station Blackout (10 CFR 50.63). The Leak Detection and Radiation Monitoring System is not relied upon in any safety analyses or plant evaluations to perform a function that demonstrates compliance with the Commission's regulation for Anticipated Transient Without Scram (10 CFR 50.62).

System Intended Functions

1. Provide primary containment boundary. Supply and return lines penetrating primary containment are provided with isolation valves. 10 CFR 54.4(a)(1)

2. Sense process conditions and generate signals for reactor trip or engineered safety features actuation. The Leak Detection and Radiation Monitoring System contains electronic instrumentation that monitors parameters for line break, radiation level and radioactivity concentration and initiates trip signals to isolate the monitored systems. 10 CFR 54.4(a)(1)

3. Resist nonsafety-related SSC failure that could prevent satisfactory accomplishment of a safety-related function. The safety-related/nonsafety-related interface has components relied upon to preserve the structural support intended function. 10 CFR 54.4(a)(2)

4. Relied upon in safety analyses or plant evaluations to perform a function that demonstrates compliance with the Commission's regulations for Fire Protection (10 CFR 50.48). The Leak Detection and Radiation Monitoring System is relied upon to support safe shutdown during fire conditions by preventing spurious isolation of the High Pressure Coolant Injection and Reactor Core Isolation Cooling systems. 10 CFR 54.4(a)(3)

5. Relied upon in safety analyses or plant evaluations to perform a function that demonstrates compliance with the Commission's regulations for Environmental Qualification (10 CFR 50.49). The Leak Detection and Radiation Monitoring System has components that are in the Environmental Qualification Program. 10 CFR 54.4(a)(3)

6. Relied upon in safety analyses or plant evaluations to perform a function that demonstrates compliance with the Commission's regulations for Station Blackout (10 CFR 50.63). The Leak Detection and Radiation Monitoring System is relied upon to support shutdown, coping and recovery during a station blackout event by preventing spurious isolation of the High Pressure Coolant Injection and Reactor Core Isolation Cooling systems. 10 CFR 54.4(a)(3)

UFSAR References

11.5
12.3.4

License Renewal Boundary Drawings

LR-M-25-1, Sheet 1

Table 2.3.3-17 Leak Detection and Radiation Monitoring System Components Subject to Aging Management Review

Component Type	Intended Function
Bolting	Mechanical Closure
Flow Element	Leakage Boundary
Piping and Fittings	Leakage Boundary
Piping and Fittings	Pressure Boundary
Piping and Fittings	Structural Support
Valve Body	Leakage Boundary
Valve Body	Pressure Boundary

The aging management review results for these components are provided in:

Table 3.3.2-17 Leak Detection and Radiation Monitoring System Summary of Aging Management Evaluation

2.3.3.18 Makeup Demineralizer System

System Purpose

The intended function of the Makeup Demineralizer System for license renewal is to maintain leakage boundary integrity to preclude system interactions. For this reason, this system's pressure retaining components located in proximity to other components performing safety-related functions have been included in the scope of license renewal. This system is not required to operate to support license renewal intended functions, and is in scope for potential spatial interaction. The portions of the Makeup Demineralizer System in scope are the components in the reactor and auxiliary buildings. The remainder is not in scope.

The purpose of the Makeup Demineralizer System is to demineralize fresh water from the station wells, store the demineralized water, and deliver demineralized water to plant services, as required. The demineralized water system is designed to provide demineralized water intermittently to various plant components. The system is manually initiated. After initiation, the demineralizer sequence is controlled automatically.

System Operation

The Makeup Demineralizer System consists of one makeup demineralizer having two trains. Each train consists of a cation exchanger, an anion exchanger, and a mixed bed exchanger. The Makeup Demineralizer System includes one vacuum degasifier vessel complete with three degasifier booster pumps and three degasifier vacuum pumps, four demineralized water storage tanks, one demineralized water jockey pump, two demineralized water transfer pumps, demineralized regeneration system that includes a resin cleaning tank, acid and caustic positive displacement pumps, caustic dilution hot water heater and associated piping, valves, and controls. The system also includes one makeup demineralizer regenerant waste tank complete with two regenerant waste pumps, two makeup demineralizer feed tanks, complete with three makeup demineralizer feed pumps, acid and caustic storage tanks in the condensate demineralizer system for regeneration associated piping and controls for all demineralizer operations.

The Makeup Demineralizer System begins upstream of the demineralizer feed tanks where the Fresh Water Supply System provides water to the tanks. It continues through the demineralization equipment to demineralized water storage tanks and supplies the demineralized water jockey pump and transfer pumps demineralized water. These pumps feed a common header, which then branches off to the systems being supplied. The Makeup Demineralizer System ends at the inlet to the systems receiving the demineralized water.

The systems in the reactor and auxiliary building that receive demineralized water from the Makeup Demineralizer System include Process and Post Accident Sampling, Standby Liquid Control, Closed Cycle Cooling Water, Standby Diesel Generators and Auxiliary, Chilled Water, Reactor Building Ventilation, and Auxiliary Building Service and Radwaste Ventilation Systems. As previously mentioned, the portions of the Makeup Demineralizer System in the Reactor Building and Auxiliary Building Control/Diesel Generator Area are in scope for potential spatial interaction.

The demineralized water in the four demineralized water storage tanks is used to fill the condensate storage tank prior to unit operation. The demineralizer water is also used prior to

unit operation for flushing and filling plant systems.

For more detailed information, see UFSAR Section 9.2.3.

System Boundary

The license renewal scoping boundary of the Makeup Demineralizer System encompasses the liquid filled portion of the system that is located in proximity to equipment performing a safety-related function. This includes the liquid filled portions of the Makeup Demineralizer System located within the Reactor and Auxiliary Buildings. Included in this boundary are pressure retaining components relied upon to preserve the leakage boundary intended function of this system. For more information, refer to the license renewal boundary drawing for identification of this boundary, shown in red. Components that are not required to support the system's leakage boundary intended function are not included in the scope of license renewal.

Not included in the Makeup Demineralizer System scoping boundary are the following interfacing systems, which are separately evaluated as license renewal systems:

Auxiliary Building Service and Radwaste Ventilation System
Auxiliary Steam System
Chilled Water System
Circulating Water System
Closed Cycle Cooling Water System
Condensate Storage and Transfer System
Control Room and Control Area HVAC Systems
Feedwater System
Fresh Water Supply System
Main Generator and Auxiliary System
Main Turbine and Auxiliary System
Miscellaneous Ventilation Systems
Process Sampling and Post-Accident Sampling System
Reactor Building Ventilation System
Service Water System
Standby Liquid Control System
Standby Diesel Generators and Auxiliary System

Reason for Scope Determination

The Makeup Demineralizer System is not in scope under 10 CFR 54.4(a)(1) because no portions of the system are safety related or relied on to remain functional during and following design basis events. The Makeup Demineralizer System is in scope under 10 CFR 54.4(a)(2) because failure of nonsafety-related portions of the system could prevent satisfactory accomplishment of function(s) identified for 10 CFR 54.4(a)(1). The system is not in scope under 10 CFR 54.4(a)(3) because it is not relied upon in safety analyses or plant evaluations to perform a function that demonstrates compliance with the Commission's regulations for Fire Protection (10 CFR 50.48), Environmental Qualification (10 CFR 50.49), Anticipated Transients Without Scram (10 CFR 50.62) or Station Blackout (10 CFR 50.63).

System Intended Functions

1. Resist nonsafety-related SSC failure that could prevent satisfactory accomplishment of a safety-related function. The Makeup Demineralizer System has potential for spatial interaction with safety-related equipment within the Reactor and Auxiliary Buildings. 10 CFR 54.4(a)(2)

UFSAR References

9.2.3

License Renewal Boundary Drawings

LR-M-10-1, Sheet 2
LR-M-11-1, Sheet 1
LR-M-13-1, Sheet 1
LR-M-18-0, Sheet 3
LR-M-23-1, Sheet 2
LR-M-30-1, Sheet 2
LR-M-48-1, Sheet 1
LR-M-89-1, Sheet 1
LR-M-90-1, Sheet 1
LR-M-90-1, Sheet 2
LR-M-90-1, Sheet 3
LR-M-93-0, Sheet 2

Table 2.3.3-18 Makeup Demineralizer System
Components Subject to Aging Management Review

Component Type	Intended Function
Bolting	Mechanical Closure
Piping and Fittings	Leakage Boundary
Valve Body	Leakage Boundary

The aging management review results for these components are provided in:

Table 3.3.2-18 Makeup Demineralizer System
Summary of Aging Management Evaluation

2.3.3.19 Primary Containment Instrument Gas System

System Purpose

The Primary Containment Instrument Gas System is a safety-related system designed to provide a continuous supply of dried, oil free, filtered compressed gas to pneumatic components inside primary containment during normal operations.

The Primary Containment Instrument Gas System is in scope for license renewal. A minor portion of the system is not required to perform license renewal intended functions and is not in scope. The Primary Containment Instrument Gas System has several interfacing systems that are not in the license renewal boundary of the Primary Containment Instrument Gas System.

The purpose of the Primary Containment Instrument Gas System is to provide clean and dried compressed gas to pneumatically operated instruments and valves. To accomplish this purpose, this system takes gas from inside of the Primary Containment or Reactor Building, and processes the gas through intake screen, filters, gas compressors, intercoolers/aftercoolers/moisture separators, thermo-siphons, gas dryers, gas receivers and gas headers for distribution to components in support of plant operation.

System Operation

The Primary Containment Instrument Gas System is comprised primarily of two redundant full capacity, skid mounted compressor trains. Each train consists of an inlet filter, compressor, intercooler/aftercooler/moisture separator, thermo-siphon, dryer prefilter, dryer, outlet filter, and receiver. All of the equipment is skid mounted (except the receiver) and located in the Reactor Building. The flow path begins at the intake screen to the compressor and terminates at the attachment points to the host pneumatic components or users, which are the supplied instruments, gas operated valves and other gas operated components. These host pneumatic components or users are evaluated in other associated license renewal systems.

The inlet gas passes through a full flow inlet particulate filter to each compressor. The compressor is a positive displacement three-cylinder, two-stage, single acting reciprocating compressor driven via belts from an electric motor. The gas compressor has cooling and lubricating oil support systems. Two of the three cylinders are for the first stage and the other cylinder is for the second stage. The gas supply is distributed evenly to the two first stage cylinders where the gas is compressed. The gas temperature increases due to the act of compression. The gas is routed through an intercooler and moisture separator to cool the gas and remove moisture prior to the second stage. After a second stage of compression, the gas is again routed through an aftercooler and moisture separator where it is cooled and moisture is removed before entering the dryer. The moisture separators utilize chevrons to rapidly change the direction of gas motion thereby trapping the heavier moisture, which is removed via an orifice to dirty radwaste.

When the gas is compressed by the compressor, there are two types of heat generated by the compressor. One is the heat due to friction of compressed metals in the cylinder; this heat is removed by the cylinder cooling system. The other is the heat of compression from the gas. This heat is removed by the cooling water system.

The compressor cylinder cooling system is comprised of a thermo-siphon, coolant reservoir and associated piping. The cooling water is supplied from the safety auxiliaries cooling plant system, which is part of the Closed Cycle Cooling Water license renewal system. As the coolant of water/glycol absorbs heat from the cylinder, a difference in density establishes natural circulation. After the heated coolant rejects heat to the cooling water of safety auxiliaries cooling plant system in the thermo-siphon, it returns to the original cooled state and completes the flow loop.

The compressor cooling water system is comprised of the intercooler and aftercooler and associated piping. The cooling water is supplied from the safety auxiliaries cooling plant system, which is part of the Closed Cycle Cooling Water license renewal system. Both the intercooler and aftercooler are tube and shell type heat exchangers. The compressed gas with high temperature flows through the shell side while the cooling water in the tube side removes the heat from the gas. The heat exchangers associated with the intercooler, aftercooler and thermo-siphon are evaluated for aging management as part of the Closed Cycle Cooling Water System.

The dryer package consists of a pre-filter, an outlet filter, solenoid operated valves, dual desiccant towers as well as piping and valves. The dryer package receives the compressed gas from the compressor, dries the gas via a heatless desiccant and then routes the dry gas into the receiver tank. The gas receiver tank feeds separate instrument gas headers inside the primary containment and reactor building. The users that obtain instrument gas from the gas headers include: main steam safety relief valves, main steam inboard isolation valves, chilled water valves for drywell coolers (unit cooler, equipment drain sump cooler, recirculation pump motor cooler), residual heat removal isolation valve and equalizer check valve, core spray isolation valve and equalizer check valve, drywell/torus vacuum relief valves and traversing incore probe drive mechanism/purge system. After leaving the receiver tanks but before continuing into the primary containment, branch connections are provided to the reactor building-to-torus vacuum breaker valve accumulators through motor operated emergency supply valves.

During normal plant operation, the two trains are interconnected downstream of the receivers isolation valves. Suction is taken from the drywell through a common suction line and intake screen. The gas compressors operate continuously to supply gas needed to support plant operations. Instrument gas is required to be provided to host components or users for normal plant operation that includes certain important functions such as opening the main steam safety relief valves when needed, closing chilled water valves for drywell coolers when needed, opening isolation and check valves for Residual Heat Removal and Core Spray when needed, supplying gas to the operators and accumulators of main steam inboard isolation valve, backing up the Compressed Air System for reactor building-to-torus vacuum breakers, and backing up the nitrogen bottles for traversing in-core probe drive mechanism. These host pneumatic components or users are evaluated in other associated license renewal systems.

In the event of a loss-of-offsite power, the compressors will trip and will not be automatically loaded onto the standby diesel generators. No changes to the system valve positions or modes for compressor operation are made to the system after restarting. When the drywell temperature increases enough to affect the Primary Containment Instrument Gas System temperatures, the compressor suction will be manually transferred from the drywell to the Reactor Building air space. All valves that could require a source of gas before the compressors are restarted are provided with individual accumulators to ensure operability.

During loss-of-coolant accident operation, the LOCA signal will close all of the primary containment isolation valves, the intertie line isolation valves, and the drywell header isolation valves. The plant operators as directed by procedure will restart the compressors and override the LOCA signal to establish a flow path to the safety relief valves including those controlled by the Automatic Depressurization System. However, the suction from the drywell is isolated and each compressor takes suction from inside of the Reactor Building through its own suction line and intake screen. Valves such as the safety relief valves, which may be required immediately following the LOCA but before restarting the Primary Containment Instrument Gas System, are provided with local accumulators to ensure availability.

One design feature in the Primary Containment Instrument Gas System is the instrument gas penetrations of the drywell at P-28A, P-28B, P-39, and J-211. These drywell penetrations have piping that penetrates the drywell and perform the primary containment boundary intended function. All of these penetrations except J-211 have two normally open automatic isolation valves that are located both inside and outside the drywell. Penetration J-211 has two normally open automatic isolation valves that are located on the outside of the drywell. Another design feature is the connection of Compressed Air System to the Primary Containment Instrument Gas System to support maintenance. This connected portion of Compressed Air System to the Primary Containment Instrument Gas System is not safety-related.

For more detailed information, see UFSAR Section 9.3.6.

System Boundary

The Primary Containment Instrument Gas System begins at the gas intake screen located inside the drywell, and continues through the containment penetration (P-39) and associated isolation valves. Outside the drywell, the system divides into two trains, and the boundary continues through the inlet filter to the gas compressor in each train, consisting of an intercooler, moisture separator and thermo-siphon. The boundary for each train continues through an aftercooler, additional moisture separator, prefilter, gas dryer, outlet filter and instrument gas receiver tank. Each train boundary continues through separate drywell penetrations (P-28A, P-28B) with associated isolation valves, to the redundant instrument gas headers inside the drywell. Each train includes a branch line connecting upstream of the separate drywell penetrations (P-28A, P-28B), that continues through a motor operated isolation valve and check valve to a gas accumulator. Each branch line boundary continues through a solenoid valve and ends at the connection to the reactor building-to-torus vacuum breaker butterfly valve air actuator in the Vacuum Relief Valve System. Each train also includes an additional gas intake screen that ties in upstream of the compressor inlet filter and is located outside the drywell in the Reactor Building.

Inside the drywell, each safety-related header boundary continues through branch connections to check valves, accumulators and solenoid valves supplying the main steam safety relief valves air actuators. Each header also continues past the main steam safety relief valves branch connections, through a safety-related isolation valve to the common nonsafety-related header, and then ends at the attachment points to the host pneumatic components or users. The common nonsafety-related header boundary includes a branch connection to the safety-related check valves, accumulators and air actuators on the inboard main steam isolation valves.

The Primary Containment Instrument Gas System boundary also includes a common intertie line between the redundant trains, connecting downstream of the instrument gas receiver tanks and continuing through the motor operated emergency supply crosstie valves. The intertie line includes a branch connection that continues through a common line to a torus penetration (J-211) and associated isolation valves and ends at the connection with the Vacuum Relief Valve System compressed gas supply to the torus to drywell vacuum breakers. The intertie line includes an additional branch connection that ends at the compressed gas supply connection to the Traversing Incore Probe System. The intertie line also includes a branch line that continues through a motor operated isolation valve and ends at the connection to the Compressed Air System.

All associated piping, components and instrumentation contained within the flow path described above are included in the system boundary.

Also included in the license renewal scoping boundary of the Primary Containment Instrument Gas System are those portions of nonsafety-related piping and equipment that extend beyond the safety-related/nonsafety-related interface up to the location of the first seismic anchor. Included in this boundary are components relied upon to preserve the structural support intended function of this portion of the system. For more information, refer to the license renewal boundary drawing for identification of this boundary, shown in red.

Not included in the scope of license renewal is the portion of the Primary Containment Instrument Gas System located inside the drywell, from the instrument gas containment supply header valves located downstream of the branch connection to the main steam safety relief valves, to the attachment points to the host pneumatic components or users, as this portion of the system is gas filled and is not safety-related.

Also not included in the Primary Containment Instrument Gas System scoping boundary are the host pneumatic components or users which consist of pneumatic instrumentation, pneumatically operated valves and other components supplied by the Primary Containment Instrument Gas System in the systems such as: Main Steam System, Vacuum Relief Valve System, Automatic Depressurization System, Traversing Incore Probe System, Chilled Water System, Residual Heat Removal System, and Core Spray System. The host pneumatic components or users are separately evaluated in their associated license renewal systems.

Not included in the Primary Containment Instrument Gas System license renewal scoping boundary are the following interfacing systems, which are separately evaluated as a license renewal system:

Closed Cycle Cooling Water System
Compressed Air System
Main Steam System
Vacuum Relief Valve System
Automatic Depressurization System
Reactor Protection System
Chilled Water System
Residual Heat Removal System
Core Spray System
Traversing Incore Probe System

Also not included in the scoping boundary of the Primary Containment Instrument Gas System are items such as drywell and torus penetrations, which are separately evaluated with the Primary Containment structure for license renewal scoping.

Reason for Scope Determination

The Primary Containment Instrument Gas System meets 10 CFR 54.4(a)(1) because it is a safety-related system that is relied upon to remain functional during and following design basis events. It meets 10 CFR 54.4(a)(2) because failure of nonsafety-related portions of the system could prevent satisfactory accomplishment of function(s) identified for 10 CFR 54.4(a)(1). It also meets 10 CFR 54.4(a)(3) because it is relied upon in the safety analyses or plant evaluations to perform a function that demonstrates compliance with the Commission's regulation for Fire Protection (10 CFR 50.48) and Environmental Qualification (10 CFR 50.49). The Primary Containment Instrument Gas System is not relied upon in any safety analyses or plant evaluations to perform a function that demonstrates compliance with the Commission's regulation for Anticipated Transient Without Scram (10 CFR 50.62) or Station Blackout (10 CFR 50.63).

System Intended Functions

1. Provide primary containment boundary. Supply lines penetrating primary containment are provided with isolation valves. 10 CFR 54.4(a)(1)

2. Provide motive power to safety-related components. Safety-related accumulators are connected to gas operated pneumatic components. 10 CFR 54.4(a)(1)

3. Resist nonsafety-related SSC failure that could prevent satisfactory accomplishment of a safety-related function. The safety-related/nonsafety-related interface has components relied upon to preserve the structural support intended function. 10 CFR 54.4(a)(2)

4. Relied upon in safety analyses or plant evaluations to perform a function that demonstrates compliance with the Commission's regulations for Fire Protection (10 CFR 50.48). The Primary Containment Instrument Gas System is required to supply compressed gas to pneumatic components to support safe shutdown for Fire Protection. 10 CFR 54.4(a)(3)

5. Relied upon in safety analyses or plant evaluations to perform a function that demonstrates compliance with the Commission's regulations for Environmental Qualification (10 CFR 50.49). The Primary Containment Instrument Gas System has components that are in the Environmental Qualification Program. 10 CFR 54.4(a)(3)

UFSAR References

9.3.6

License Renewal Boundary Drawings

LR-M-41-1, Sheet 1
LR-M-41-1, Sheet 2
LR-M-57-1, Sheet 1
LR-M-59-1, Sheet 1
LR-M-59-1, Sheet 2

Table 2.3.3-19 Primary Containment Instrument Gas System Components Subject to Aging Management Review

Component Type	Intended Function
Accumulator	Pressure Boundary
Bolting	Mechanical Closure
Compressor	Structural Support
Drain Traps	Structural Support
Filter Housing (Inlet, Outlet, Prefilter, Intake Screen)	Pressure Boundary
Filter Housing (Inlet, Outlet, Prefilter, Intake Screen)	Structural Support
Flow Element	Pressure Boundary
Heat Exchanger Components (PCIG Compressor Inter & After coolers)	Evaluated with the Closed Cycle Cooling Water System
Heat Exchanger Components (Thermo-Siphon)	Evaluated with the Closed Cycle Cooling Water System
Hoses	Pressure Boundary
Piping and Fittings	Pressure Boundary
Piping and Fittings	Structural Support
Tanks (Gas Dryer)	Pressure Boundary
Tanks (Moisture Separator)	Pressure Boundary
Tanks (Receiver)	Pressure Boundary
Valve Body	Pressure Boundary
Valve Body	Structural Support

The aging management review results for these components are provided in:

Table 3.3.2-19 Primary Containment Instrument Gas System Summary of Aging Management Evaluation

2.3.3.20 Primary Containment Leakage Rate Testing System

System Purpose

The Primary Containment Leakage Rate Testing (PCLRT) System is a license renewal system that provides the means to measure the leakage from the Primary Containment.

The Primary Containment Leakage Rate Testing System consists of the following subsystems: Type A Testing subsystem, Type B Testing subsystem and Type C Testing subsystem. The Type A Testing subsystem is used to pressurize the Primary Containment to a test pressure so that the integrated leakage rate of the containment can be determined and compared with the appropriate acceptance criteria. The determination of Primary Containment leakage is accomplished with a data acquisition center. The Type B Testing subsystem is used to pressurize and measure local leakage across pressure or leakage limiting boundaries other than valves. Similarly, the Type C Testing subsystem is used to pressurize and measure local leakage rates across containment isolation valves.

Portions of both Type A and B testing subsystems are in the scope of license renewal. The Type C testing subsystem is not in the scope of license renewal.

System Operation

Type A Testing Subsystem

This subsystem is comprised of a pressurization facility/connection unit and a data acquisition center. The pressurization facility contains test equipment used to perform integrated leakage rate testing of the Primary Containment boundary. The pressurization facility is not safety-related and is isolated from the Primary Containment during normal operation by test connection manual isolation valves. The connection unit that connects the pressurization facility to the Primary Containment is not safety-related and is gas-filled. The connection unit is normally isolated from the Primary Containment attachment point by a removable spool piece and isolated from the pressurization facility at a permanently installed connection point by test connection manual isolation valves.

The data acquisition center is a data collection and data calculation station. A portion of the data collection station is safety-related piping and valves. This portion includes the safety-related piping and three valves that are an extension from the Primary Containment and are located at penetrations J36C, J36D and J209. The penetrations will be evaluated under the license renewal Primary Containment structure. The piping and valves in the remaining portion of the data collection station that are located from the first seismic anchor to the flexible connection point are not safety-related. The data calculation station is not safety-related and is isolated from the primary containment during normal operation by closed manual isolation valves.

The portion of the data collection station associated with penetrations J36C, J36D and J209 as described above is required to function to support the (a)(1) Primary Containment intended function. This portion is included in the scope of license renewal because it is safety-related and will be evaluated as part of this Primary Containment Leakage Rate Testing license renewal system.

The pressurization facility/connection unit, nonsafety-related portion of data collection station, and data calculation station of the Type A Testing subsystem are not required to function to support license renewal intended functions. They are not included in the scope of license renewal because they are not safety-related and are isolated from the primary containment during normal operation.

Type B Testing Subsystem

This subsystem is comprised of various pressurization units and test units. The pressurization unit consists of test equipment used to perform the local leakage rate testing (LLRT) for the test unit. The pressurization unit is not safety-related and is isolated from the test unit during normal operation by manually closed isolation valves. The test unit is comprised of test components, piping and valves that connect the test components and pressurization unit. The test components are electrical penetration seals, mechanical penetration seals, mechanical expansion bellows, drywell airlock door and other Type B boundaries. These test components are evaluated with the Primary Containment Structure.

The portion of piping and valves between the test component and boundary valve is safety-related. This portion is required to function to support the (a)(1) Primary Containment intended function. It is included in the scope of license renewal because it is safety-related and will be evaluated as part of this Primary Containment Leakage Rate Testing license renewal system.

The pressurization unit and test unit associated with equipment hatch C2 and containment doors is evaluated in the Compressed Air System for license renewal scoping.

The pressurization unit is not required to function to support license renewal intended functions. It is not included in the scope of license renewal because it is not safety-related and is isolated from the test unit during normal operation by manually closed isolation valves.

Type C Testing Subsystem

This subsystem is comprised of various pressurization units and system containment isolation valve test units. The pressurization unit is test equipment used to perform the LLRT for the containment isolation valve test unit. The pressurization unit is not safety-related and is disconnected from the containment isolation valve test unit during normal operation. The system containment isolation valve test units allow connection and removal of the above described test equipment to perform Type C leakage rate testing on an associated containment isolation test volume. The test unit includes the system test connection piping, test manual isolation valves and associated system containment isolation valve test volume which is in other license renewal systems that include containment isolation valves in their system boundaries. These Type C containment isolation test units are evaluated with these other license renewal systems that have containment isolation valves in their system boundary.

The pressurization unit is not required to function to support license renewal intended functions. It is not included in the scope of license renewal because it is not safety-related and is disconnected from the test unit during normal operation.

For more detailed information, see UFSAR Section 6.2.6.

System Boundary

The license renewal scoping boundary of Primary Containment Leakage Rate Testing System (PCLRT) consists of the following Type A, B and C Testing subsystems.

Type A Subsystem

The Type A subsystem consists of the pressurization facility/connection unit and data acquisition center.

The boundary for the pressurization facility/connection unit begins at the permanently installed connection point for the pressurization facility. It continues through the connection unit and ends at the primary containment attachment point. This portion of the system is not safety-related and is not required to perform an intended function. In addition, since this portion of the system contains gas it does not support the system leakage boundary intended function. Therefore, this portion of the Primary Containment Leakage Rate Testing System is not required to perform an intended function and is not included in the scope of license renewal.

The boundary for the data acquisition center begins at the pressure sensing points inside the primary containment atmosphere and suppression chamber. It continues through their corresponding piping/valves at penetrations J36C, J36D and J209, first seismic anchor, isolation valves, flexible connection point and terminates at the data calculation station. The data calculation station and the portion from the first seismic anchor to the flexible connection point are not in scope because this portion of the system is not safety-related and is isolated during normal operation by manually closed isolation valves.

Type B Subsystem

The Type B subsystem boundary begins at the pressurization units that are disconnected from the test units during normal operation. The boundary continues through the piping and the boundary valve closest to each test component and terminates at the attachment points to each test component (e.g., penetration, expansion bellow and airlock door). These test components are evaluated with the Primary Containment Structure for license renewal scoping. The portion of the system between the inlet to the boundary valve closest to the test component and the attachment point of each test component (e.g., penetration, expansion bellow and airlock door) is safety-related, required to perform an intended function and is included in the scope of license renewal. The remaining portion of the system, from the pressurization units that are disconnected from the test units during normal operation to the first seismic anchor, is not safety-related. In addition, since this portion of the system contains gas it does not support the system leakage boundary intended function. Therefore, this portion of the system is not required to perform an intended function and is not included in the scope of license renewal.

Type C Subsystem

The pressurization unit for the Type C subsystem is not safety-related and is disconnected during normal operation. Therefore, this portion of the system is not required to perform an intended function and is not included in the scope of license renewal. As previously discussed, the Type C containment isolation valve test units are in other license renewal system boundaries and are evaluated with these other license renewal systems.

Also included in the license renewal scoping boundary of the Primary Containment Leakage Rate Testing System are those portions of nonsafety-related piping and equipment that extend beyond the safety-related/nonsafety-related interface up to the location of the first seismic anchor. Included in this boundary are components relied upon to preserve the structural support intended function of this portion of the system. For more information, refer to the license renewal boundary drawing for identification of this boundary, shown in red.

Not included in the scoping boundary of the Primary Containment Leakage Rate Testing System license renewal are items such as penetrations, penetration seals, expansion bellows, and airlock door seals, which are separately evaluated in the Primary Containment Structure.

Not included in the Primary Containment Leakage Rate Testing license renewal scoping boundary are the following interfacing systems, which are separately evaluated as license renewal systems:

Primary Containment
Compressed Air System

Reason for Scope Determination

The Primary Containment Leakage Rate Testing System meets 10 CFR 54.4(a)(1) because it is a safety-related system that is relied upon to remain functional during and following design basis events. It meets 10 CFR 54.4(a)(2) because failure of nonsafety-related portions of the system could prevent satisfactory accomplishment of function(s) identified for 10 CFR 54.4(a)(1). It also meets 10 CFR 54.4(a)(3) because it is relied upon in the safety analyses or plant evaluations to perform a function that demonstrates compliance with the Commission's regulation for Environmental Qualification (10 CFR 50.49). The Primary Containment Leakage Rate Testing System is not relied upon in any safety analyses or plant evaluations to perform a function that demonstrates compliance with the Commission's regulation for Fire Protection (10 CFR 50.48), Anticipated Transient Without Scram (10 CFR 50.62), or Station Blackout (10 CFR 50.63).

System Intended Functions

1. Provide primary containment boundary. Testing lines penetrating primary containment are provided with isolation valves. 10 CFR 54.4(a)(1)

2. Resist nonsafety-related SSC failure that could prevent satisfactory accomplishment of a safety related function. The safety-related/nonsafety-related interface has components relied upon to preserve the structural support intended function. 10 CFR 54.4(a)(2)

3. Relied upon in safety analyses or plant evaluations to perform a function that demonstrates compliance with the Commission's regulations for Environmental Qualification (10 CFR 50.49). The Primary Containment Leakage Rate Testing System has components that are in the Environmental Qualification Program. 10 CFR 54.4(a)(3)

UFSAR References

6.2.6

License Renewal Boundary Drawings

LR-M-55-1, Sheet 1
LR-M-60-1, Sheet 1

Table 2.3.3-20 Primary Containment Leakage Rate Testing System Components Subject to Aging Management Review

Component Type	Intended Function
Bolting	Mechanical Closure
Piping and Fittings	Pressure Boundary
Piping and Fittings	Structural Support
Valve Body	Pressure Boundary

The aging management review results for these components are provided in:

Table 3.3.2-20 Primary Containment Leakage Rate Testing System Summary of Aging Management Evaluation

2.3.3.21 Process and Post-Accident Sampling Systems

System Purpose

The Process and Post-Accident Sampling Systems is a normally operating system that consists of the process sampling plant system and the post-accident sampling system.

The process sampling plant system is designed to permit a representative sample to be taken from all process streams related to plant power operation and liquid radwaste processing. The sample is in a form which can be used in the laboratory and which safeguards against change in the constituents to be examined, minimizes the contamination and radiation at the sample point and reduces decay and sample line plateout as much as possible.

The purpose of the process sampling plant system is to monitor the operation of equipment, and to supply information for making operating decisions where these are influenced by water chemistry. It accomplishes this by collecting steam; gaseous and liquid samples throughout the facility. The intended function of the Process Sampling Plant System for license renewal is to maintain leakage boundary integrity to preclude system interactions. For this reason, portions of this system's pressure retaining components located in proximity to other components performing safety-related functions have been included in the scope of license renewal. This system is not required to operate to support license renewal intended functions, and portions of this system are in scope for potential spatial interaction.

Similarly, the post-accident plant sampling system is designed to obtain representative liquid and gas grab samples from the reactor coolant system and from the primary containment and reactor building atmospheres for radiological and chemical analysis under accident conditions. The grab samples are subsequently transported to the onsite laboratory for chemical and radioisotopic analysis or shipped offsite for analysis.

The purpose of the post-accident sampling plant system is to permit collection and processing of liquid and gaseous samples. The post-accident sampling plant system accomplishes its purpose by providing piping to collect these samples during normal and post-accident conditions, and a system to analyze the samples during post-accident conditions. The post-accident sampling plant system was originally installed to meet the requirements of Item II.B.3 of NUREG 0737. While no longer required by the Technical Specifications, the post-accident sampling plant system continues to be maintained and operation of the system is described in approved plant procedures. This system contains containment isolation valves that are required to operate to support license renewal intended functions, and portions of this system are in the scope of license renewal.

System Operation

Process Sampling Plant System

The process sampling plant system is comprised of three sample stations: reactor building sample station, auxiliary building sample station, and turbine building sample station. Each station provides the service of collecting and analyzing samples obtained from the plant systems in the respective building.

The process sampling station consists of centrally located, prefabricated, shop-assembled panels that contain sample conditioning equipment that reduces the pressure and controls the flow and temperature of the samples. All sample stations are provided with stainless steel sinks that are hooded and ventilated to remove entrained gases liberated during normal sampling. The sinks drain into one of three drainage systems, depending on the service of the water being sampled. The three drainage systems are clean radwaste system, dirty radwaste system and chemical radwaste drain system.

Exceptions to this include some drainage from the reactor building sample station, which is routed to the main condenser, and drainage from the Turbine Building sampling station, which is routed to the condensate drain tank. Where possible, automatic analyzers are used to measure critical analysis parameters. Data are recorded on strip chart recorders and in the plant computer. The grab sample facilities allow operators to collect samples for chemical or radiological analysis.

Sample flow rates to the analyzer and grab sample panels are designed to provide turbulent flow and to supply a representative sample. Where the sample temperature is too high, the sample will be cooled down through cooler prior to the analysis. The cooling water for the coolers are provided by the reactor auxiliaries cooling water plant system. Furthermore, if the temperature is a critical parameter for the sample analysis, an isothermal bath is available in the sample line. The cooling water for the isothermal bath is provided by the chilled water plant system.

The Reactor Building sample station collects and analyzes sample for the following plant systems: residual heat removal system, control rod drive hydraulic system, reactor recirculation system, reactor water cleanup system and cleanup filter/demineralizer system. This sample station is not required to operate to support license renewal intended functions, but is included in the scope of license renewal as this liquid filled station is located within an area adjacent to the components performing a safety related function.

The Auxiliary Building sample station collects and analyzes sample for the following plant systems: auxiliary steam, fuel pool filter demineralizer, liquid radwaste equipment drain processing, liquid radwaste floor drain processing, liquid radwaste chemical waste processing, liquid radwaste regenerant waste processing and solid waste collection. This sample station is not required to operate to support license renewal intended functions, and is not included in the scope of license renewal as this liquid filled station is not located within an area adjacent to the components performing a safety related function.

The Turbine Building sample station collects and analyzes sample for the following plant systems: chiller water system, feedwater, condensate and refueling water storage and transfer, vents and drains heaters, condensate demineralizer, condensate, main steam, and condensate pre-filter system. This sample station is not required to operate to support license renewal intended functions, and is not included in the scope of license renewal as this liquid filled station is not located within an area adjacent to the components performing a safety related function.

Post-Accident Sampling Plant System

The post-accident sampling plant system is primarily comprised of three subsystems: a liquid and gas sample station; a separate but interconnected rack mounted piping station; and a control panel with interconnecting and required panel wiring. A separate refrigeration unit is

provided for gas sample cooling purpose. The liquid and gas sample station are each contained in a separate shielded enclosure mounted on a common structure frame. Enclosed within the sample station are equipment trays that contain modularized liquid and gas samplers. The piping station that is installed within the reactor building includes sample coolers and control valves which select sample points. Demineralized water and nitrogen gas are provided as support systems for the post-accident sampling plant system.

The post-accident sampling plant system is designed to operate in two sampling modes: liquid sampling mode and gas sampling mode.

For liquid sampling mode, the liquid sample station collects a small liquid sample, large volume liquid sample, or dissolved gas sample from either the reactor coolant or suppression pool. Sample of reactor coolant is obtained from one jet pump instrument line when the reactor is at pressure. Alternatively, when the reactor is depressurized, sample can be obtained from the RHR pump discharge when in the shutdown cooling mode. Suppression pool sample is obtained from the residual heat removal pump discharge when in the suppression pool cooling mode. All samples are cooled prior to arrival at the sample station by small coolers of piping station located in reactor building. The cooling water for the coolers is supplied from safety auxiliaries cooling plant system. The liquid sample station is designed to allow demineralized water flushing of the system lines from a point in the piping station through the sampling needles. The liquid sample lines are flushed from a demineralized water tank, which is pressurized from the nitrogen gas supply. The purge flow is adjusted by the operator through control panel to maintain turbulent flow in the sample line. Flow is established to the sample station, through a four-way ball valve and back to the suppression pool after merging with the liquid as collected in the liquid collector. A radiation monitor in the sampling unit provides an assessment of sample activity level and also monitors the effectiveness of system flushing following sample operation. The residual dissolved gas will be vented into the Reactor Building atmosphere through the gas pump of gas sample station.

For gas sampling mode, the gas sample station collects the gas samples from the drywell, suppression chamber, or reactor building atmospheres. The gas as sampled from the mentioned is cooled by a refrigeration unit to remove moisture and associated iodine. Gas samples are analyzed onsite with a gamma spectrometer and a gas chromatograph. When purging the drywell and suppression chamber gas sample lines to obtain a representative sample, the flow is pumped back to the suppression chamber. During purging of the reactor building line and when flushing the sample panel lines with nitrogen, flow is pumped back to the Ractor Building. The gas sample lines are insulated and electrically heat traced. The heat tracing is evaluated as an electrical commodity.

The post-accident sampling plant system sampling line penetrations, although not in use during power operation, have piping that either connects to the existing primary containment penetration or penetrates the primary containment and performs a primary containment boundary intended function. Each of the penetrations is isolated during power operation by two safety-related automatic isolation valves. The piping and safety-related valves associated with penetrations will be in the scope of the Process and Post-Accident Sampling license renewal system.

For more detailed information, see UFSAR Section 9.3.2.

System Boundary

Process Sampling Plant System

The license renewal scoping boundary of the process sampling plant system encompasses the liquid filled portions of the system that are located in proximity to equipment performing a safety-related function. This includes the sample associated piping with the sampling stations located within the reactor building. Included in this boundary are pressure retaining components relied upon to preserve the leakage boundary intended function of this system. For more information, refer to the license renewal boundary drawings for identification of this boundary, shown in red.

Not included in the scope of license renewal are the piping and components located within the liquid sample station panel enclosures in the Reactor Building, as these enclosures do not contain safety-related equipment. The enclosures provide physical shielding, and the enclosed components do not have the potential for spatial interaction with safety-related components. The enclosure prevents leakage or spray from impacting safety-related components. The enclosure is in scope and evaluated as a structural commodity.

Post-Accident Sampling Plant System

The post-accident sampling plant system boundary for liquid sampling mode begins at the attachment point to a calibrated jet pump instrument line outside the primary containment and upstream of the excess flow check valve and the attachment point to the upstream of the first isolation valve in the Residual Heat Removal System sample line at the discharge of each residual heat removal exchanger. All sample piping merges and continues through the coolers and the ball valve at which two branches emerge. One branch piping continues through the four-way ball valve and ends at the small liquid volume sample bottle. The other branch piping continues through the closed liquid loop that contains hold-up cylinder and gas breakdown pump and ends at either gas collection chamber or large volume liquid sample bottle. The boundary includes the piping to flush the residual liquid sample in the liquid sample station. The flushing piping begins at the demineralized water tank, which is pressurized from the nitrogen gas supply. The piping continues through the whole liquid sample station and return to the suppression pool after merging with the piping connected with the liquid collector. Also included in the boundary is the piping to vent the residual dissolved gas from the liquid sample. The vent piping begins at the attachment point upstream of the gas collection chamber and continues through the branch connection line for liquid collector vent, gas pump in the gas sample station, and ends at the Reactor Building atmosphere. All associated piping, components and instrumentation contained within the flow path described above are included in the system boundary.

The post-accident sampling plant system boundary for gas sampling mode begins at the attachment points to the atmospheres of the drywell, suppression chamber and reactor building. The sample lines continuing from the attachment points meet at the multi-port sample valve and continue through gas cooler, and then end at the gas sample bottle. The boundary includes the piping to purge the residual gas sample in the gas sample station. The purging piping begins at the attachment point to the upstream of the gas sample bottle and continues through the branch connection point of liquid collector vent, gas pump, and then ends at the suppression chamber when both the drywell and suppression chamber gas sample lines are purged or ends at the reactor building atmosphere when the reactor building sample line is purged. All associated piping, components including the refrigerant unit and

instrumentation contained within the flow path described above are included in the system boundary.

Included in the license renewal scoping boundary of the post-accident sampling plant system are those portions of nonsafety-related piping and equipment that extend beyond the safety-related/nonsafety-related interface up to the location of the first seismic anchor, or to a point no longer in proximity to equipment performing a safety-related function, whichever extends furthest. This includes the nonsafety-related portions of the system located within the Reactor and Auxiliary buildings. Included in this boundary are pressure-retaining components relied upon to preserve the leakage boundary intended function of this portion of the system. For more information, refer to the License Renewal Boundary Drawing for identification of this boundary, shown in red.

Not included in the scope of license renewal are the piping and components located inside the liquid sample station, gas sample station, and piping station, as these enclosures do not contain safety-related equipment. The enclosures provide physical shielding, and the enclosed components do not have the potential for spatial interaction with safety-related components. Also not included in the scope of license renewal are the demineralized water tank, control panel, nitrogen supply bottles and refrigeration unit, as they are nonsafety-related and physically located in the radwaste corridor that does not have components performing a safety-related function.

Not included in the Process and Post-Accident Sampling Systems license renewal scoping boundary are the following interfacing systems, which are separately evaluated as license renewal systems:

Residual Heat Removal System
Control Rod Drive System
Reactor Recirculation System
Reactor Water Cleanup System
Auxiliary Steam System
Fuel Pool Cooling and Cleanup System
Radwaste System
Chilled Water System
Feedwater System
Condensate Storage and Transfer
Main Turbine and Auxiliary System
Condensate System
Main Steam System
Hydrogen Water Chemistry System
Equipment and Floor Drainage System
Closed Cycle Cooling Water System

There are some portions of the Process and Post-Accident Sampling Systems boundary that are in scope for license renewal for the primary containment boundary intended function. These portions of the system are associated with the sampling line penetrations, although not in use during power operation. These penetrations have piping that either connects to the existing primary containment penetration or penetrates the primary containment. Each of the penetrations is isolated during power operation by two safety-related automatic isolation valves. The piping and safety-related valves associated with containment penetrations will be in the scope of the Process and Post-Accident Sampling license renewal system.

Reason for Scope Determination

The Process and Post-Accident Sampling Systems meets 10 CFR 54.4(a)(1) because it is a safety-related system that is relied upon to remain functional during and following design basis events. It meets 10 CFR 54.4(a)(2) because failure of nonsafety-related portions of the system could prevent satisfactory accomplishment of function(s) identified for 10 CFR 54.4(a)(1). The Process and Post-Accident Sampling Systems is not relied upon in any safety analyses or plant evaluations to perform a function that demonstrates compliance with the Commission's regulation for Fire Protection (10 CFR 50.48), Environmental Qualification (10 CFR 50.49), Anticipated Transient Without Scram (10 CFR 50.62) and Station Blackout (10 CFR 50.63).

System Intended Functions

1. Provide primary containment boundary. Sampling lines penetrating primary containment are provided with isolation valves. Flow orifices are provided to limit reactor coolant loss from a rupture of the sample lines. 10 CFR 54.4(a)(1)

2. Resist nonsafety-related SSC failure that could prevent satisfactory accomplishment of a safety-related function. The safety-related/nonsafety-related interface has components relied upon to preserve the structural support and leakage boundary intended function. 10 CFR 54.4(a)(2)

UFSAR References

9.3.2

License Renewal Boundary Drawings

LR-M-23-1, Sheet 2
LR-M-38-0, Sheet 1
LR-M-38-0, Sheet 2
LR-M-44-1, Sheet 1

Table 2.3.3-21 Process and Post-Accident Sampling Systems Components Subject to Aging Management Review

Component Type	Intended Function
Bolting	Mechanical Closure
Bolting (Class 1)	Mechanical Closure
Class 1 Piping, Fittings and Branch Connections < NPS 4"	Pressure Boundary
Piping and Fittings	Leakage Boundary
Piping and Fittings	Pressure Boundary
Restricting Orifices	Pressure Boundary
Restricting Orifices	Throttle
Valve Body	Leakage Boundary
Valve Body	Pressure Boundary
Valve Body (Class 1)	Pressure Boundary

The aging management review results for these components are provided in:

Table 3.3.2-21 Process and Post-Accident Sampling Systems Summary of Aging Management Evaluation

2.3.3.22 Radwaste System

System Purpose

The Radwaste System is a normally operating mechanical system designed to process liquid radioactive waste for reuse by the plant or for discharge to the Delaware River. The Radwaste System also processes and packages solid radioactive waste for shipment to an offsite repository. The Radwaste System consists of the following plant systems: liquid radwaste, solid radwaste, and radioactive laundry. The liquid radwaste system is designed to collect, store, process, and dispose of or recycle all radioactive or potentially radioactive liquid waste generated by plant operation or maintenance. The solid radwaste system collects and processes wet and dry radioactive wastes generated by the plant, packages and monitors the resultant solid radioactive product, and provides temporary storage facilities prior to offsite shipment and permanent disposal. The radioactive laundry collects and processes detergent drains from the laundry and personnel decontamination facilities and discharges it to the Delaware River.

The purpose of the Radwaste System is to provide for collection and processing of potentially radioactive liquid and solid wastes generated by the plant. The Radwaste System accomplishes this through the use of tanks, demineralizers, filters, coolers, piping, valves and pumps required to process liquid radwaste, and waste containers and drums to process solid radwaste.

The drywell floor and equipment drain sump discharge piping, a portion of the liquid radwaste system, contains safety-related piping and automatic containment isolation valves that support the primary containment intended function, and are included in scope for license renewal. Other portions of both the liquid and solid radwaste systems have water filled piping in the vicinity of safety-related equipment and are in the scope of license renewal for spatial interaction only. The remainder of the system, including the various tanks and associated processing equipment, is not in the scope of license renewal because it does not perform an intended function.

System Operation

Liquid waste input originates from equipment leakage, drainage, and process waste produced by plant operations. Radioactive wastes collected throughout the plant are transferred to the appropriate collection tanks in the Auxiliary Building Service and Radwaste Area. Waste inputs are processed, following neutralization if necessary, on a batch basis through various combinations of filters and mixed bed demineralizers based on the waste source point and expected destination. The processed waste intended for reuse are collected in one of the sample tanks for chemical and radioactivity analysis. If acceptable, the tank contents are returned to the condensate storage tank for plant reuse. A recycle routing from the sample tank allows the sampled water that does not meet demineralized water quality requirements to be pumped back to a collector tank for additional processing by filtration and demineralization, or to the waste surge tank for transfer or other processing. If the plant condensate inventory is high, or there is no intent to return it to the plant, the sampled waste water is discharged to the cooling tower blowdown line for dilution prior to discharge to the Delaware River.

The solid radwaste system receives powdered and bead resin and filter media slurries from the Condensate, Reactor Water Clean Up, Fuel Pool Cooling and Radwaste systems. The

slurries then go to a bypass of the solid radwaste system provided upstream of the centrifuge feed tank which is no longer used. This bypass enables the processing of resins by a portable system supplied by a vendor. Permanent flanged connections are provided on the south wall of the radwaste truck bay to enable processing of filter media, waste sludge and/or resin slurries by the portable dewatering system. Space is provided outside the truck bay, for a temporary control panel with an adjacent 480 V AC power supply connection. This provides maximum system flexibility and minimizes radiation exposure. The condensate is returned to the waste sludge phase separator and the solids are put into a high integrity container for storage.

The solid radwaste system also accepts dry solid trash. Noncompactable trash, e.g., tools and components, is packaged in a suitable sized container, which meets DOT requirements.

The radioactive laundry system collects and processes detergent drains. These drains are high in soaps and may be high in organics and are treated with an anti-foamant, buffer, and pH chemicals as needed. The radioactive laundry system does not perform an intended function and is not in the scope of license renewal.

For more detailed information, see UFSAR Sections 6.2.4, 11.2 and 11.4.

System Boundary

The Radwaste System boundary begins at the attachment point to the interfacing system piping (Equipment and Floor Drainage, Reactor Water Clean Up, Fuel Pool Cooling, Condensate, and Decontamination Facilities) or the laundry facility and continues to the appropriate collection tanks, waste sludge phase separator, or spent resin tank in the Auxiliary Building Service and Radwaste Area. From the tanks, the waste is processed through filters and demineralizers for the liquid radwaste, or solidification and drying components for the solid radwaste. Once water purity has been confirmed, the liquid is returned to the plant, discharged to the Delaware River, or returned for reprocessing. The system ends at the condensate storage tank or discharge to the river.

The Radwaste System supports the primary containment intended function. This portion of the system begins with the drywell floor and equipment drains inboard isolation valves, continues through the drywell penetrations (one each for the drywell equipment drain sump and the floor drain sump pump discharge lines) and ends at the outboard isolation valves.

Also included in the license renewal scoping boundary of the Radwaste System are those water filled portions of nonsafety-related piping and equipment located in proximity to equipment performing a safety-related function. This includes the nonsafety-related portions of the system located in the Primary Containment and Reactor Building. Included in this boundary are pressure-retaining components relied upon to preserve the leakage boundary intended function of this portion of the system. For more information, refer to the license renewal boundary drawings for identification of this boundary, shown in red.

The Radwaste System piping and components located in Turbine Building and Auxiliary Building Service and Radwaste Area are not in the vicinity of safety-related equipment and are not required to support intended functions. This portion of the Radwaste System is not included in scope for license renewal.

Not included in the Radwaste System license renewal scoping boundary are the following interfacing systems which are separately evaluated as license renewal systems:

Auxiliary Building Service and Radwaste Ventilation Systems
Circulating Water System
Compressed Air System
Condensate System
Condensate Storage and Transfer System
Equipment and Floor Drainage System
Fuel Pool Cooling and Cleanup System
Main Condenser Air Extraction System
Residual Heat Removal System
Reactor Water Cleanup System

Reason for Scope Determination

The Radwaste System is in scope under 10 CFR 54.4(a)(1) because portions of the system are safety-related or relied upon to remain functional during and following design basis events. The Radwaste System is in scope under 10 CFR 54.4(a)(2) because failure of non-safety-related portions of the system could prevent satisfactory accomplishment of function(s) identified for 10 CFR 54.4(a)(1). The system is in scope under 10 CFR 54.4(a)(3) because it is relied upon in safety analyses or plant evaluations to perform a function that demonstrates compliance with the Commission's regulations for Environmental Qualification (10 CFR 50.49), and Station Blackout (10 CFR 50.63). The Radwaste System is not relied upon in any safety analysis or plant evaluations to perform a function that demonstrates compliance with the Commission's regulation for Fire Protection (10 CFR 50.48) or Anticipated Transient Without Scram (10 CFR 50.62).

System Intended Functions

1. Provides primary containment boundary. The Radwaste System (drywell floor and equipment drain portion) isolation valves close automatically on isolation signals. 10 CFR 54.4(a)(1)

2. Resist nonsafety-related SSC failure that could prevent satisfactory accomplishment of a safety-related function. The Radwaste System includes nonsafety-related water filled lines in the Reactor Building that have the potential for spatial interaction (spray or leakage) with safety-related SSCs. 10 CFR 54.4(a)(2)

3. Relied upon in the safety analysis or plant evaluations to perform a function that demonstrates compliance with the Commission's regulations for Environmental Qualification (10CFR 50.49). The Radwaste System (drywell floor and equipment drain portion) isolation valves are expected to operate in a post LOCA environment. 10 CFR 54.4(a)(3)

4. Relied upon in safety analyses or plant evaluations to perform a function that demonstrates compliance with the Commission's regulations for Station Blackout (10 CFR 50.63). The Radwaste System (drywell floor and equipment drain portion) isolation valves are credited in the Station Blackout analysis for maintaining primary containment integrity. 10 CFR 54.4(a)(3)

UFSAR References

11.2
11.4

License Renewal Boundary Drawings

LR-M-61-1, Sheet 1
LR-M-61-1, Sheet 2
LR-M-66-0, Sheet 1

Table 2.3.3-22 Radwaste System
Components Subject to Aging Management Review

Component Type	Intended Function
Bolting	Mechanical Closure
Piping and Fittings	Leakage Boundary
Piping and Fittings	Pressure Boundary
Pump Casing	Leakage Boundary
Tanks	Leakage Boundary
Valve Body	Leakage Boundary
Valve Body	Pressure Boundary

The aging management review results for these components are provided in:

Table 3.3.2-22 Radwaste System
Summary of Aging Management Evaluation

2.3.3.23 Reactor Building Ventilation System

System Purpose

The Reactor Building Ventilation System is a continuously operating mechanical system with containment pre-purge capability, heating and cooling capability and an isolation mode. The system is designed to provide filtering, cooling and heating to the reactor building compartments during startup, full power, shutdown and some portions remain operational during design basis accidents. The Reactor Building Ventilation System consists of the following plant systems: reactor building ventilation system, equipment area cooling system, containment pre-purge cleanup system, steam tunnel cooling system and electric unit heaters. However, portions of the Reactor Building Ventilation System are not required to perform intended functions and are therefore, not in scope. The Reactor Building Ventilation System has several interfaces with other systems that are not in the license renewal boundary of the Reactor Building Ventilation System.

The purpose of the Reactor Building Ventilation System is to maintain compartment temperatures at acceptable limits, it regulates the static pressure within the reactor building to maintain air flow from areas of lesser contamination to areas of greater contamination, and provides for safe disposal of airborne contaminants.

It accomplishes the above by maintaining the reactor building pressure at a slightly negative pressure with respect to outdoor pressure while ventilating the reactor building with filtered air and exhausting outdoors through a high efficiency particulate air (HEPA) filter.

The Reactor Building Ventilation System is also used during inerting and de-inerting of the primary containment and provides a flow path for Filtration, Recirculation, and Ventilation System for design basis events. In addition the Reactor Building Ventilation System is used to provide compartmental heating or cooling to Emergency Core Cooling System (ECCS) pump compartments and steam tunnel during normal and abnormal conditions.

During normal plant operation, the Reactor Building Ventilation System is in service and the Filter, Recirculation and Ventilation System is in standby. The containment pre-purge cleanup system is normally out of service and only operates during inerting and de-inerting operations. During a design basis accident, the Reactor Building Ventilation System automatically shuts down and the secondary isolation dampers will close. The Filter, Recirculation and Ventilation System automatically starts and uses the Reactor Building Ventilation System ductwork within the reactor building during design basis events. The safety-related reactor building equipment area cooling plant system unit coolers will continue to operate during normal and emergency operating conditions providing cool air to the safety-related pump compartments.

System Operation

The reactor building ventilation plant system is comprised of a supply and exhaust sub-system. The reactor building plant supply sub-system is part of the reactor building ventilation system and is comprised of three 50% capacity supply trains. During normal plant operations, two of the three trains are operating. During refueling operations, all three supply fans are placed in service to maintain proper internal building pressures on the refuel floor. Each reactor building plant supply system train consists of a common intake louver and plenum, a particulate filter, high efficiency filter, steam heating coil, chilled water cooling coil, in-duct

housing supply fan, ductwork, controls, induct electric heating coils, dampers and instruments. The Reactor Building Ventilation System chilled water cooling coils are evaluated with the Chilled Water System. The flow path for all three trains start at the common intake plenum, air flows from the plenum into the reactor building ventilation housing where it is filtered and tempered. Air continues through the housing fan, through the exhaust ductwork where the air re-combines into a common duct header. The airflow continues past the two safety-related secondary containment isolation dampers, one inboard and one outboard. Flow continues into the reactor building and is distributed throughout the entire reactor building. The system boundary ends at the compartment louvers throughout the reactor building and refuel floor exhaust registers. Also in the boundary are the High Pressure Coolant Injection (HPCI), Reactor Core Isolation Cooling (RCIC) and standby liquid control room's in-duct safety-related electric heating coils, which are used to maintain these compartments at a minimum temperature.

The reactor building ventilation plant exhaust sub-system is comprised of three 50% capacity trains. Each reactor building ventilation plant exhaust system is part of the reactor building ventilation system. Each train consists of a low efficiency filter, HEPA filter, flexible ductwork connections, controls, dampers, exhaust fan and instruments. During normal plant operations, two of the three exhaust fans are operating. During refueling operations, all three exhaust fans are placed in service to maintain proper internal building pressures on the refuel floor. The flow path begins at the return registers located within the reactor building and refuel floor compartments. Airflow travels through the return ductwork from all elevations in the reactor building. The airflow combines into a common ductwork header, flows across the in-duct radiation detectors and the airflow pass through two in-series safety-related secondary containment isolation dampers, one inboard and one outboard. An isolation of the Reactor Building Ventilation System will occur on detected high radiation levels. These radiation detectors are evaluated in the Leak Detection and Radiation Monitoring System. The airflow continues through the secondary isolation dampers and airflow splits into three ducts feeding each of the reactor building exhaust units. Air flows through the low efficiency and HEPA filter, and continues through the exhaust fan and airflow re-combines into a common duct header. The flow path ends as the common duct header exhaust air from the reactor building ventilation plant system to the south plant vent stack. During abnormal conditions the supply and exhaust containment isolation dampers close, the reactor building supply and exhaust plant systems shutdown and the Filter, Recirculation and Ventilation System automatically starts. The reactor building ventilation plant system ductwork contained inside the reactor building and refuel floor is used by the Filter Recirculation Ventilation System to process the reactor building air during accident conditions.

The equipment area cooling plant system is comprised of both safety-related and nonsafety-related cooling units. Each equipment compartment contains two 100% capacity cooler units. Each cooler unit contains a cooling coil, fan housing and associated ductwork, piping and controls. The cooling water to the cooling coil is provided either from the Control Area Chilled Water System (SACS Room Coolers) or the Closed Cycle Cooling Water System (RCIC, HPCI, RHR, and Core Spray Room Coolers). The cooling coils are evaluated for aging management review in either the Control Area Chilled Water System or Closed Cycle Cooling Water System, respectively. Also included in the scope of license renewal is the safety-related, reactor building compartment steam flooding isolation dampers, which also have an active safety-related function in the Reactor Building Ventilation System. The function of the dampers is to contain the steam resulting from a pipe break within the equipment compartment in which the break occurs and to prevent the spread of the steam through the HVAC openings or ductwork into adjacent spaces. These dampers are normally open, redundant series

mounted, fast closing, counterweighted back pressure dampers. Closure of the dampers is actuated by a pressure switch sensing the rise in pressure created by the discharge of fluid from a broken pipe. The flow path for all cooling units begins with the warm compartment air flowing across the cooling coil, which is contained within the cooling unit housing. The air continues into the inlet of the unit cooler fan where it finally ends as the air exhausts back into the equipment compartment lowering the room temperatures. The cooling units for each of the safety-related compartments are actuated by a temperature switch located within the equipment compartment to maintain appropriate equipment compartment temperatures.

Not included in the scope of license renewal is the nonsafety-related portion of the Reactor Building Ventilation System equipment area cooling system located within the control rod drive (CRD) repair shop and control rod drive control room compartments. Some compartments containing equipment area cooling plant systems also contain safety-related steam flooding isolation dampers, which are installed on the common supply and exhaust duct headers leading to and from the adjacent compartments which contain safety-related equipment. These isolation dampers are designed to close when a line break occurs.

The containment pre-purge cleanup plant sub-system is comprised of one nonsafety-related full capacity ventilation train. This train consists of a housing unit, which contains a low efficiency filter, electric heating coil, HEPA filter, charcoal filter and high efficiency filter. Also included in this plant system is a external full capacity fan, along with dampers, safety-related primary containment isolation valves, ductwork instruments and controls. The safety-related isolation dampers (valves) are used to isolate the system from the torus and primary containment during normal and abnormal plant conditions. The safety-related torus and primary containment isolation valves are evaluated with the Containment Inerting and Purging System. This nonsafety-related system is used to pre-purge the drywell and torus prior to aligning Reactor Building Ventilation System for final purging operations. The drywell and torus atmosphere is first recirculated by the containment pre-purge cleanup plant system, as required, to reduce the level of atmospheric radioactivity to within radiological effluent technical specification limits. The system is then connected in parallel with the Reactor Building Ventilation System ductwork. The containment pre-purge cleanup plant system also contains safety-related steam flooding isolation dampers, which are installed on the common supply and exhaust duct headers leading to and from the torus and primary containment. These isolation dampers are designed to close when a line break occurs.

The steam tunnel cooling plant system is comprised of one full capacity nonsafety-related unit cooler, which contains two chilled water cooling coils and two 100% capacity fans, ductwork, piping and controls. Cooling is supplied by the Chilled Water System. The cooling coils are evaluated with the Chilled Water System. Warm air enters the steam tunnel unit cooler and passes over the two in series cooling coils. Airflow continues to one of the full capacity fans and the flow ends as it exits the exhaust ductwork from the operating fans. The steam tunnel cooling plant system does not support any intended function of the reactor building ventilation system and is not in scope of license renewal.

The nonsafety-related electric unit plant heaters consist of heating coils that are controlled by local room thermostats. These nonsafety-related unit heaters are located throughout the reactor building room compartments. There is no pressure boundary associated with the electric unit heaters. Since there is no pressure boundary or housing associated with the electric unit heaters and does not support any intended function of the reactor building ventilation system, this component type is not subject to an aging management review.

For more detailed information, see UFSAR Section 9.4.2.

System Boundary

The reactor building ventilation plant system has both a supply and exhaust portion to this system. The reactor building ventilation plant sub-system supply boundary begins at the common intake louver located on the reactor building and continues to a common supply plenum. The supply ductwork then continues into the three supply ducts. Each of the ducts leads to a reactor building ventilation supply train. Each supply train consists of an inlet damper, particulate filter, high efficiency filter, in-duct steam heating coil, in-duct chilled water coil and supply fan. The steam heating coil is provided by the Auxiliary Steam System, which supplies steam to the heating coils. Chilled water is provided by the Chilled Water System and supplies chilled water to the cooling coil. The steam system and chilled water piping and connections are included and evaluated for aging management review with their respective systems for license renewal. The system boundary continues through the external 50% capacity supply fan and isolation damper and combines into a common supply duct connecting all three reactor building supply trains together. As the supply duct passes through the reactor building, the ductwork contains a pair of in-series safety-related secondary containment supply isolation dampers, one inboard and one outboard damper. The reactor building ventilation plant supply air system boundary continues into the reactor building supply safety-related ductwork, which supplies all eight elevations within the reactor building, and into the individual room compartments on each elevation. The system boundary ends at the reactor building compartment supply registers located in these room compartments. For the HPCI, RCIC and standby liquid control rooms, the compartment ducts also contain safety-related electric heaters, which are used to maintain minimum temperatures in these compartments. During accident conditions, an alternate reactor building flow path connects the reactor building ventilation supply and exhaust ductwork with the Filtration, Recirculation and Ventilation System. The reactor building ventilation supply and exhaust sub-systems will shutdown, all secondary containment safety-related dampers will close and the Filtration, Recirculation and Ventilation System will use the reactor building ductwork to recirculate air throughout the reactor building and venting of air from the reactor building to the vent at the top of the reactor building. The Filtration, Recirculation and Ventilation System is evaluated as a separate system for license renewal.

The reactor building ventilation exhaust plant sub-system boundary begins at the reactor building compartment return registers located at all eight elevations within the reactor building. The return ductwork from these compartments continues into the common exhaust duct. The exhaust ductwork contains in-duct radiation monitors, which are used to isolate the Reactor Building Ventilation System and start the Filtration, Recirculation and Ventilation System on high radiation levels. The ductwork continues and passes through a pair of in-series safety-related secondary containment isolation dampers, one inboard and one outboard damper. The system boundary continues as the nonsafety-related ductwork splits into three separate ducts. Each exhaust duct supplies one of the reactor building ventilation system exhaust filter units. Each filter unit consists of a back draft damper, low efficiency filter and a HEPA filter. Flow exits the filter housing and flows to the inlet of a 50% capacity exhaust fan. The system boundary continues with the exhaust air from the exhaust fan, passing through a balancing damper where flow from all three exhaust filter units combine into a common duct connecting to the south plant vent. The system boundary ends as airflow exhausts outdoors through the south plant vent.

The equipment area cooling plant system boundary begins at the inlet to the unit coolers and passes over the in-duct cooling coils. Air continues through the unit cooler housing and into the inlet of the unit cooler fan. The system boundary ends at the unit cooler fan discharge to the equipment compartment. The in-duct cooling coils are evaluated with the Control Area Chilled Water System or the Closed Cycle Cooling Water System for license renewal.

The containment pre-purge cleanup plant system boundary begins at the exhaust ductwork connected to the containment isolation valves from the torus and primary containment. The primary containment isolation valves (exhaust and supply) are evaluated with the Containment Inerting and Purging System for license renewal. The ductwork from the torus pass through a pair of compartment steam flooding safety-related isolation dampers and combine with the return ductwork from primary containment to a common duct header. This header continues to the nonsafety-related containment pre-purge cleanup filter housing, which consists of low and high efficiency filters, electric heating coil, HEPA filter and a charcoal filter. The boundary continues to the nonsafety-related containment pre-purge fan and continues into the exhaust ductwork. The ductwork returns back either to the torus or primary containment where the boundary ends at the primary containment valves. The pre-purge cleanup plant system ductwork also connects to the reactor building supply and exhaust ductwork where the torus and primary containment can be either vented or exhausted using the Reactor Building Ventilation System.

Not included in the scope of license renewal is the nonsafety-related portions of the Reactor Building Ventilation System, including the nonsafety-related portions of the reactor building ventilation supply sub-system (the nonsafety-related supply trains, dampers and ducting leading to the safety-related secondary containment isolation dampers), and portions of the reactor building ventilation exhaust sub-system, including the nonsafety-related exhaust filter units, dampers and ducting after the safety-related secondary containment isolation dampers leading to the nonsafety-related reactor building ventilation exhaust units. The reactor building ventilation supply and exhaust sub-system fan units, dampers and ductwork is not in scope of license renewal because they are not safety-related and do not support the safety related portions of the Reactor Building Ventilation System during design basis events. During a design basis event, the safety-related supply and exhaust secondary containment isolation valves will close and isolate the reactor building and shutdown the reactor building ventilation supply and exhaust fan units, allowing the Filter, Recirculation and Ventilation System to circulate air within the reactor building using the Reactor Building Ventilation System safety-related dampers and ducting. The Filter, Recirculation and Ventilation System is separately evaluated for licensing aging management review. The portions of the equipment area cooling plant systems for the CRD and CRD control room compartments are not in the scope of license renewal because these compartments do not contain safety-related equipment. Cooling of these components is not required to support licensing renewal intended functions. The nonsafety-related containment pre-purge cleanup plant system is used to vent and purge to torus and primary containment during outages and prior to unit startup and therefore is not required to support license renewal intended functions. The containment pre-purge cleanup plant system is not in the scope of license renewal because it does not support the in scope portions of the Reactor Building Ventilation System. The nonsafety-related steam tunnel cooling plant system provides supplemental ventilation in the steam tunnel compartment only. The steam tunnel cooling plant system is not required to support intended functions and is not included within the scope of license renewal. The nonsafety-related electric room heaters are not within the scope of license renewal because these heaters only provide supplemental heating to building compartments within the reactor building and are not required to support license renewal intended functions.

Also included within the Reactor Building Ventilation System is the reactor building pressure monitoring instrumentation.

Not included in the Reactor Building Ventilation System scoping boundary are the following systems, which are separately evaluated as license renewal systems:

Auxiliary Steam System
Chilled Water System
Closed Cycle Cooling Water System
Compressed Air System
Containment Inerting and Purging System
Control Area Chilled Water System
Filtration, Recirculation and Ventilation System
Leak Detection and Radiation Monitor System

Reason for Scope Determination

The Reactor Building Ventilation System meets 10 CFR 54.4(a)(1) because portions of the system are safety-related and relied on to remain functional during and following design basis events. The Reactor Building Ventilation System meets 10 CFR 54.4(a)(2) because failure of nonsafety-related portions of the system could prevent satisfactory accomplishment of function(s) identified in 10 CFR 54(a)(1). The Reactor Building Ventilation System meets 10 CFR 54(a)(3) because it is relied upon in the safety analyses and plant evaluations to perform a function that demonstrates compliance with the Commission's regulations for Fire Protection (10 CFR 50.48), Environmental Qualification (10 CFR 50.49), and Station Blackout (10 CFR 50.63). The Reactor Building Ventilation System is not relied upon in any safety analyses or plant evaluation to perform a function that demonstrates compliance with the Commission's regulation for Anticipated Transients Without Scram (10 CFR 50.62).

System Intended Functions

1. Provide secondary containment boundary. Provides secondary containment isolation of the reactor building ventilation exhaust and supply dampers during emergency conditions. 10 CFR 54.4(a)(1)

2. Maintain emergency temperature limits within areas containing safety related components. Provide ventilation cooling and isolation capability within the reactor building to maintain environmental conditions at acceptable limits during normal and abnormal conditions. 10 CFR 54.4(a)(1)

3. Resist nonsafety-related SSC failure that could prevent satisfactory accomplishment of a safety-related function. The Reactor Building Ventilation System includes nonsafety-related piping that connects to and provides structural support for safety-related piping. 10 CFR 54.4(a)(2)

4. Relied upon in safety analysis or plant evaluations to perform a function that demonstrates compliance with the Commission's regulations for Fire Protection (10 CFR 50.48). The unit coolers are credited to maintain the safety-related pump rooms within temperature limits during fire conditions. 10 CFR 54.4(a)(3)

5. Relied upon in safety analyses or plant evaluations to perform a function that demonstrates compliance with the Commission's requirements for Environmental Qualification. (10 CFR 50.49) The unit coolers are credited in maintaining acceptable room conditions within the safety-related pump compartments during pump operation. 10 CFR 54.4(a)(3)

6. Relied upon in safety analyses or plant evaluations to perform a function that demonstrates compliance with the Commission's requirements for Station Blackout (10 CFR 50.63). The unit coolers are credited in maintaining acceptable room conditions within the safety-related pump compartments during pump operation. 10 CFR 54.4(a)(3)

UFSAR References

9.4.2

License Renewal Boundary Drawings

LR-M-83-1, Sheet 1
LR-M-84-1, Sheet 1
LR-M-76-1, Sheet 1

Table 2.3.3-23 Reactor Building Ventilation System Components Subject to Aging Management Review

Component Type	Intended Function
Accumulator	Pressure Boundary
Bolting	Mechanical Closure
Damper Housing	Pressure Boundary
Door Seal	Pressure Boundary
Ducting and Components	Pressure Boundary
Electric Heaters (Housing)	Pressure Boundary
Fan Housing	Pressure Boundary
Flow Device	Pressure Boundary
Heat Exchanger Components (RBVS Supply System)	Evaluated with the Chilled Water System
Heat Exchanger Components (Room Unit Coolers)	Evaluated with the Closed Cycle Cooling Water System
Heat Exchanger Components (SACS Room Unit Coolers)	Evaluated with the Control Area Chilled Water System
Louver	Pressure Boundary
Piping and Fittings	Pressure Boundary
Piping and Fittings	Structural Support
Sensor Element (Temperature)	Pressure Boundary
Sensor Element (Radiation Detector)	Pressure Boundary
Thermowell	Pressure Boundary
Valve Body	Pressure Boundary

The aging management review results for these components are provided in:

Table 3.3.2-23 Reactor Building Ventilation System Summary of Aging Management Evaluation

2.3.3.24 Reactor Water Cleanup System

System Purpose

The Reactor Water Cleanup System is a filtration and demineralization system that maintains the purity of the water in the reactor coolant system. It can be operated during startup, shutdown, and refueling modes, as well as during power operation. The primary purpose of the Reactor Water Cleanup System is to: reduce the deposition of water impurities on fuel surfaces, thus minimizing heat transfer surface fouling; reduce secondary sources of beta and gamma radiation by removing corrosion products, impurities and fission products from the reactor coolant; reduce the concentration of chloride ions to protect steel components from chloride stress corrosion; and maintain or lower water level in the reactor vessel during startup, shutdown and refueling operations, in order to accommodate reactor coolant swell during heatup and to accommodate water inputs from the Control Rod Drive System. The secondary purpose of the Reactor Water Cleanup System is to minimize thermal stratification of the reactor vessel during periods of no recirculation flow; to provide an alternate means of vessel cooldown; and to provide continuous water quality monitoring for conductivity, pH, oxygen, and silica. The Reactor Water Cleanup System accomplishes these purposes by forced circulation of reactor coolant through heat exchangers and filter-demineralizers.

Portions of the Reactor Water Cleanup System are considered reactor coolant system pressure boundary. The Reactor Water Cleanup System has automatic valve actuation signals that isolate the system from the reactor coolant pressure boundary.

The Reactor Water Cleanup System includes the noble chemical mitigation monitoring and data acquisition system.

System Operation

The Reactor Water Cleanup System is comprised of reactor water cleanup recirculation pumps, regenerative heat exchangers, non-regenerative heat exchangers, isolation and throttle valves, piping, cleanup filters and auxiliaries (e.g., precoat tank, precoat pump, filter demineralizer, holding pump, etc.), and reactor drain lines. The noble chemical mitigation monitoring and data acquisition system is also part of the Reactor Water Cleanup System operation.

Reactor coolant flows from the A and B recirculation loops, and the bottom reactor head drain line, through the reactor water cleanup system supply isolation valves, then continues to the suction of the reactor water cleanup recirculation pumps. The discharge from the pumps is cooled in the regenerative and non-regenerative heat exchangers (in series) to protect the powdered resin, processed through the filter-demineralizer, reheated through the regenerative heat exchanger and returned back to the reactor through the reactor feedwater lines. The Reactor Water Cleanup System simultaneously takes suction from the reactor vessel bottom drain to assist in preventing thermal stratification in the lower vessel head region and removes any impurities that may settle in the lower head region. The Reactor Water Cleanup System can be used to remove excess water from the reactor in order to maintain reactor water level during startup, shutdown, and refueling evolutions. To lower reactor level, some of the cleanup system effluent flow is directed through the blowdown flow path to the condensate system or to the Radwaste System.

At the primary containment penetration the reactor water cleanup supply piping has one motor operated isolation valve inside the drywell and one motor operated isolation valve outside the drywell. The reactor water cleanup supply isolation valves will close and consequently the reactor water cleanup recirculation pumps will stop automatically under any of the following conditions: low-low reactor level, actuation of the Standby Liquid Control System, non-regenerative heat exchanger high outlet temperature (closes the outboard isolation valves), high differential flow between reactor water cleanup influent and effluent, reactor water cleanup equipment compartment high ambient temperature, and high differential temperature across the reactor water cleanup equipment compartment ventilation ducts.

The reactor water cleanup return piping to the feedwater lines has one motor-operated check valve before teeing off to the feedwater lines, and one check valve on each of the feedwater loops outside the drywell. Check valves both inside and outside the drywell are also provided on the feedwater return flow paths to the reactor to provide primary containment isolation. These valves are not included in the Reactor Water Cleanup System boundary and will be evaluated with the Feedwater System.

Also, the Reactor Water Cleanup System automatically isolates the reactor water cleanup blowdown flow path to the Condensate System or to the Radwaste System upon high downstream pressure or low upstream pressure as sensed by those downstream and upstream pressures at the location of the blowdown line restricting orifice. This section of the system piping is safety-related to support the Reactor Water Cleanup System differential flow high energy line break isolation flow element, which is an input to the Containment Isolation System.

The noble chemical mitigation monitoring and data acquisition system, which is part of the Reactor Water Cleanup System, is skid mounted equipment that collects, processes, and stores data necessary to determine the electrochemical corrosion potential of the reactor coolant system. The noble chemical mitigation monitoring and data acquisition system is comprised of an electrochemical corrosion potential monitor, a durability monitor, and a data acquisition system. The noble chemical mitigation monitoring and data acquisition system draws a small flow of reactor coolant from a common header at discharge of the reactor water cleanup recirculation pumps and returns it to the common suction line for each reactor water cleanup recirculation pumps.

Also, included in the Reactor Water Cleanup System is a safety-related flow element, associated transmitters and valves that monitors the crack monitoring system flow rate.

For more detailed information, see UFSAR Section 3.6.1.2.1.5 & 5.4.8.

System Boundary

The Reactor Water Cleanup System boundary begins at the attachment to the reactor recirculation pump A and B suction piping and the attachment to the reactor vessel bottom drain. The boundary continues through the reactor water cleanup supply isolation valves, reactor water cleanup recirculation pumps, tube side of the regenerative heat exchangers, tube side of the non-regenerative heat exchangers (the shell side of the non-regenerative heat exchangers are evaluated with the Closed Cycle Cooling Water System), cleanup filter demineralizers, shell sides of the regenerative heat exchangers, reactor water cleanup return isolation valves, and ends at the feedwater loops A and B discharge piping. Included within the system boundary is the noble chemical mitigation monitoring and data acquisition system,

which is supplied from the reactor water cleanup pump discharge and returns to the reactor water cleanup pump suction. Also included within the Reactor Water Cleanup System boundary is the reactor water cleanup blowdown flow path to the condensate system or to the Radwaste System. Additionally, the safety-related flow element, associated transmitters and valves that monitor the crack monitoring system flow rate is included within the Reactor Water Cleanup System boundary. The remaining portions of the crack monitoring system are evaluated in the Hydrogen Water Chemistry System. All associated piping and components contained within the flowpaths described above are included in the Reactor Water Cleanup System evaluation boundary.

Included in the license renewal boundary of the Reactor Water Cleanup System are those portions of nonsafety-related piping and equipment that extend beyond the safety-related/nonsafety-related interface up to the location of the first seismic anchor, or to a point no longer in proximity to equipment performing a safety-related function, whichever extends furthest. This includes the nonsafety-related portions of the system located within the Reactor Building and the Auxiliary Building, which specifically includes the whole noble chemical mitigation monitoring and data acquisition system, as this system is located entirely within the Reactor Building. Also, included in the boundary are the pressure retaining components located in the Reactor Building and the Auxiliary Building relied upon to preserve the leakage boundary intended function of the system. For more information, refer to the license renewal boundary drawing for identification of this boundary, shown in red.

Not included in the Reactor Water Cleanup System license renewal scoping boundaries are the following interfacing systems, which are separately evaluated as license renewal systems:

Closed Cycle Cooling Water System
Condensate System
Compressed Air System (instrument air)
Feedwater System
Hydrogen Water Chemistry System
Process and Post-Accident Sampling System
Radwaste System
Reactor Protection System
Reactor Recirculation System

Reason for Scope Determination

The Reactor Water Cleanup System meets 10 CFR 54.4(a)(1) because it is a safety-related system that is relied upon to remain functional during and following design basis events. It meets 10 CFR 54.4(a)(2) because failure of nonsafety-related portions of the system could prevent satisfactory accomplishment of function(s) identified for 10 CFR 54.4(a)(1). It also meets 10 CFR 54.4(a)(3) because it is relied upon in the safety analyses or plant evaluations to perform a function that demonstrates compliance with the Commission's regulations for Fire Protection (10 CFR 50.48), Environmental Qualification (10 CFR 50.49), ATWS (10 CFR 50.62), and Station Blackout (10 CFR 50.63).

System Intended Functions

1. Provide reactor coolant pressure boundary. The Reactor Water Cleanup System trips and fully isolates from the reactor coolant pressure boundary upon indication of a Reactor Water Cleanup System high energy line break. 10 CFR 54.4(a)(1)

2. Introduce emergency negative reactivity to make the reactor subcritical. The Reactor Water Cleanup System trips and isolates from the reactor coolant pressure boundary upon standby liquid control flow. 10 CFR 54.4(a)(1)

3. Provide primary containment boundary. The Reactor Water Cleanup System trips and fully isolates from the Primary Containment. 10 CFR 54.4(a)(1)

4. Resist nonsafety-related SSC failure that could prevent satisfactory accomplishment of a safety-related function. The Reactor Water Cleanup System contains nonsafety-related water filled lines in the Reactor Building and pipe chase room, which all have spatial interactions (spray or leakage) with safety-related SSCs. 10 CFR 54.4(a)(2)

5. Relied upon in safety analyses or plant evaluations to perform a function that demonstrates compliance with the Commission's regulations for Fire Protection (10 CFR 50.48). The reactor water cleanup isolation valves are credited as high/low pressure interfaces. This also includes the isolation valves, which are credited with isolating the reactor water cleanup blowdown flow path to the main condenser or to the liquid radwaste equipment drain processing system. 10 CFR 54.4(a)(3)

6. Relied upon in safety analyses or plant evaluations to perform a function that demonstrates compliance with the Commission's regulations for Environmental Qualification (10 CFR 50.49). The primary containment isolation valves within the Reactor Water Cleanup System are environmentally qualified. 10 CFR 54.4(a)(3)

7. Relied upon in safety analyses or plant evaluations to perform a function that demonstrates compliance with the Commission's regulations for Anticipated Transients Without Scram (10 CFR 50.62). The inboard and outboard containment isolation valves for the Reactor Water Cleanup System will close upon start of the standby liquid control pumps. The Reactor Water Cleanup System prevents the standby liquid reactivity control material from being removed from the reactor coolant when required for shutdown. 10 CFR 54.4(a)(3)

8. Relied upon in safety analyses or plant evaluations to perform a function that demonstrates compliance with the Commission's regulations for Station Blackout (10 CFR 50.63). The Reactor Water Cleanup System receives isolation signal upon initiation of the Station Blackout. 10 CFR 54.4(a)(3)

UFSAR References

3.6.1.2.1.5
5.2.3.2.2
5.4.8

License Renewal Boundary Drawings

LR-M-23-1, Sheet 2
LR-M-43-1, Sheet 1
LR-M-44-1, Sheet 1
LR-M-44-1, Sheet 2
LR-M-45-1, Sheet 1
LR-M-66-0, Sheet 1
LR-M-101-0, Sheet 3

Table 2.3.3-24 Reactor Water Cleanup System
Components Subject to Aging Management Review

Component Type	Intended Function
Bolting	Mechanical Closure
Bolting (Class 1)	Mechanical Closure
Class 1 Piping, Fittings and Branch Connections < NPS 4"	Pressure Boundary
Filter Housing	Leakage Boundary
Flow Element	Leakage Boundary
Flow Element	Pressure Boundary
Flow Element (Class 1)	Pressure Boundary
Heat Exchanger Components (Non-Regen)	Leakage Boundary
Heat Exchanger Components (Non-Regen)	Shell Side components evaluated with the Closed Cycle Cooling Water System
Heat Exchanger Components (Pump HX)	Leakage Boundary
Heat Exchanger Components (Regen)	Leakage Boundary
Piping and Fittings	Leakage Boundary
Piping and Fittings	Pressure Boundary
Piping and Fittings (Class 1)	Pressure Boundary
Pump Casing (Holding)	Leakage Boundary
Pump Casing (Precoat)	Leakage Boundary
Pump Casing (Recirculation)	Leakage Boundary
Restricting Orifices	Leakage Boundary
Restricting Orifices	Pressure Boundary
Restricting Orifices	Throttle
Restricting Orifices (Class 1)	Pressure Boundary
Restricting Orifices (Class 1)	Throttle
Sensor Element	Leakage Boundary
Sight Glasses	Leakage Boundary
Strainer Body	Leakage Boundary
Tanks (Autoclave)	Leakage Boundary
Tanks (Demineralizer)	Leakage Boundary
Tanks (Precoat)	Leakage Boundary
Thermowell	Leakage Boundary
Thermowell (Class 1)	Pressure Boundary
Valve Body	Leakage Boundary

Component Type	Intended Function
Valve Body	Pressure Boundary
Valve Body (Class 1)	Pressure Boundary

The aging management review results for these components are provided in:

Table 3.3.2-24 Reactor Water Cleanup System
Summary of Aging Management Evaluation

2.3.3.25 Remote Shutdown Panel Room HVAC System

System Purpose

The Remote Shutdown Panel Room HVAC System is a mechanical system designed to maintain air temperature, quality, humidity and maintain the remote shutdown panel compartment at a slight positive pressure ensuring the proper operation of controls and equipment that can be used to safely shut down the plant if the main control room is unusable. The purpose of the Remote Shutdown Panel Room HVAC System is to provide a continuous supply of filtered and conditioned air and maintain the remote shutdown panel room compartment at a slightly positive pressure to prevent infiltration of fire, smoke, fumes, and airborne radioactivity from surrounding areas into the remote shutdown panel room compartment. The Remote Shutdown Panel Room HVAC System accomplishes this purpose by providing adequate ventilation flow capacity into the remote shutdown panel room compartment to prevent infiltration when the ventilation system is manually placed in service.

System Operation

The Remote Shutdown Panel Room HVAC System is comprised of a 100% capacity fan housing consisting of low and high efficiency filters, two chilled water cooling coils, an electric heating coil, humidifier and full capacity supply fan, ducting, dampers, instruments, piping, controls and associated ductwork. The Control Area Chilled Water System supplies the chilled water to each of the cooling coils. During control room fire and evacuation, the Remote Shutdown Panel HVAC System can be manually placed in service to provide proper environmental conditions in the remote shutdown panel room compartment. During operation, a portion of the compartment air is recirculated back to the inlet of the fan housing and is mixed with outside air to provide air back to the remote shutdown panel room compartment. Although the system is not safety related, during accident conditions the system can be manually restarted to provide ventilation to the remote shutdown panel room compartment.

For more detailed information, see UFSAR section 9.4.3.1.3.

System Boundary

The Remote Shutdown Panel Room HVAC System boundary begins at the inlet louver, and continues through the inlet ductwork to the fan supply housing. The fan supply housing includes a low efficiency filter, high efficiency filter, electric heating coil, two chilled water cooling coils, humidifier, full capacity supply fan, piping, instruments and associated ductwork. The system boundary continues through the supply ductwork to the remote shutdown panel room compartment where the boundary ends at the discharge registers. The return boundary for the Remote Shutdown Panel Room HVAC system begins at the return registers in the remote shutdown panel room compartment. The boundary continues through the return air ductwork and the boundary ends at the inlet to the fan supply housing where return air is mixed with outdoor air within the fan supply housing.

Not included in the Remote Shutdown Panel Room HVAC System are the following interfacing systems, which are separately evaluated as license renewal systems:

Control Area Chilled Water System
Makeup Demineralizer System

Reason for Scope Determination

The Remote Shutdown Panel Room HVAC System is not in scope under 10 CFR 54.4(a)(1) because no portions of the system are safety-related or relied upon to remain functional during and following design basis events. The Remote Shutdown Panel Room HVAC System is in scope under 10 CFR 54.4(a)(2) because failure of nonsafety-related portions of the system would could prevent satisfactory accomplishment of functions(s) identified for 10 CFR 54.4(a)(1). The system is in scope under 10 CFR 54.4(a)(3) because it is relied upon in safety analyses or plant evaluations to perform a function that demonstrates compliance with the Commission's regulations for Fire Protection (10 CFR 50.48). The Remote Shutdown Panel Room HVAC System is not relied upon in any safety analysis or plant evaluations to perform a function that demonstrates compliance with the Commission's regulation for Environmental Qualification (10 CFR 50.49), Anticipated Transient Without Scram (10 CFR 50.62), or Station Blackout (10 CFR 50.63).

System Intended Functions

1. Resist nonsafety-related SSC failure that could prevent satisfactory accomplishment of a safety-related function. The Remote Shutdown Panel Room HVAC System is non-seismic category I, except for the cooling coils and housing of the remote shutdown panel room supply unit. 10 CFR 54.4(a)(2)

2. Relied upon in safety analysis or plant evaluations to perform a function that demonstrates compliance with the Commission's regulations for Fire Protection(10 CFR 50.48). The Remote Shutdown Panel Room HVAC System maintains the compartment habitability within the remote shutdown panel room compartment during a fire condition in the main control room allowing the shutdown of the plant. 10 CFR 54.4(a)(3)

UFSAR References

9.4.3.1.3

License Renewal Boundary Drawings

LR-M-93-0, Sheet 2

Table 2.3.3-25 Remote Shutdown Panel Room HVAC System Components Subject to Aging Management Review

Component Type	Intended Function
Bolting	Mechanical Closure
Damper Housing	Pressure Boundary
Door Seal	Pressure Boundary
Ducting and Components	Pressure Boundary
Electric Heaters (Housing)	Pressure Boundary
Fan Housing	Pressure Boundary
Filter Housing	Pressure Boundary
Flexible Connection	Pressure Boundary
Heat Exchanger Components	Evaluated with the Control Area Chilled Water System
Louver	Pressure Boundary
Piping and Fittings	Pressure Boundary
Sensor Element	Pressure Boundary
Valve Body	Pressure Boundary

The aging management review results for these components are provided in:

Table 3.3.2-25 Remote Shutdown Panel Room HVAC System Summary of Aging Management Evaluation

2.3.3.26 Service Water Intake Ventilation System

System Purpose

The Service Water Intake Ventilation System is a normally operating forced air ventilation system designed to remove waste heat produced from the components located in the Service Water Intake Structure. The Service Water Intake Ventilation System consists of the Service Water Pump Area Ventilation subsystem and the Traveling Screen Motor Room Ventilation subsystem. The Service Water Intake Ventilation System is in scope for License Renewal.

The purpose of the Service Water Intake Ventilation System is to maintain the temperatures in the two service water pump areas and traveling screen motor room within design conditions. The Service Water Intake Ventilation System accomplishes this purpose by supplying fresh air and re-circulated air throughout the Service Water Intake Structure. This ventilation system is designed as a safety related system and will remain operational during accident conditions.

The Service Water Intake Ventilation System provides ventilation to the two service water pump areas and the traveling screen motor room. The Service Water Pump Area Ventilation subsystem is located in two separate compartments of the Service Water Intake Structure. Each service water pump area compartment contains two separate service water pumps along with two redundant supply and exhaust fans, ventilation dampers and several electric unit room heaters along with associated instruments and controls. The Intake Structure Traveling Screen Motor Room Ventilation subsystem houses two full capacity supply fans along with electric unit room heaters, ventilation dampers, tornado dampers and the associated instruments and controls for this ventilation system.

System Operation

The Service Water Intake Ventilation System is located in the Service Water Intake Structure. In each of the two service water pump area compartments there are two full capacity supply and two full capacity exhaust fans and all associated controls, ventilation dampers and compartment electric unit room heaters. Normally, one supply and exhaust fan is operating to provide sufficient air to regulate temperatures in the service water pump area rooms. If a running supply fan has low airflow, then the running supply and exhaust fans will stop. The standby supply and exhaust fans will start if the room temperature is above the room high temperature switch set point. The low flow trip will activate a common trouble alarm both locally and remotely at the main control room.

In addition to the fan start and stop temperature switches, a high-low temperature switch is located in each pump room. The temperature switch alarms both locally and activates a common trouble alarm in the main control room on abnormal high or low room temperature. During Service Water Pump outages, if required, electric unit room heaters, which are controlled by wall-mounted thermostats, can provide supplemental heating. These heaters are nonsafety-related and do not support and is not required to perform an intended function and is not subject to an aging management review.

For the common traveling screen motor room ventilation compartment, there are two full capacity supply fans along with the associated controls, ventilation dampers, tornado dampers and unit electric heaters provided to control compartment temperatures. A high-low room temperature switch is used in this compartment that will alarm both locally and remotely at the

main control room. A supply fan flow switch will start the standby fan when in "auto" mode if the running fan exhibits low airflow. A room thermostat modulates the outdoor, return and exhaust air dampers to control compartment temperatures. During traveling screen motor room supply fan maintenance outages, if required, electric unit room heaters, which are controlled by wall-mounted thermostats, can provide supplemental heating. These heaters are nonsafety-related and do not support and is not required to perform an intended function and is not subject to an aging management review.

For more detailed information, see UFSAR Section 9.4.7.

System Boundary

The boundary of the Service Water Intake Ventilation System supply to the Service Water Motor Pump rooms begins at the outside air intake louvers, and continues through the intake dampers and inlet bell and screen through the supply fan and into the supply ducting which provides air to all compartment elevations. Warm exhaust air flows from the Service Water Pump Area compartment through the inlet bell and screen through the exhaust fan to the exhaust compartment and discharges the air through the exhaust damper and outdoors through the exhaust louvers and wire mesh screen. The Service Water Pump Area Ventilation System includes a recirculation damper located between the exhaust compartment of the exhaust fan and the inlet of the supply fan to allow for operation in a recirculation mode for temperature control. All associated ductwork, components, and instrumentation contained within the flow path described above are included in the Service Water Intake Ventilation System.

The boundary of the Traveling Screen Motor Room Ventilation System supply to the Traveling Screen Motor Room begins at the outside wire mesh screen, through the tornado and control dampers and out through the supply fan and into the compartment. Exhaust air from the Traveling Screen Motor Room compartment flows through a gravity relief damper, through a tornado damper and exits outside through a wire mesh screen. The Traveling Screen Motor Room Ventilation System includes ducting and recirculation control dampers to allow for warm air to recycle to the inlet of the supply fan. All associated ductwork, components, and instrumentation contained within the flow path described above are included in the Service Water Intake Ventilation System.

Not included in the Service Water Intake Ventilation System license renewal scoping boundary are the following interface systems, which are separately evaluated as license renewal systems:

Service Water Intake Structure
Service Water System

Reason for Scope Determination

The Service Water Intake Ventilation System meets 10 CFR 54.4(a)(1) because it is a safety-related system that is relied upon to remain functional during and following design basis events. The Service Water Intake Ventilation System is not in scope under 10 CFR 54.4(a)(2) because failure of nonsafety-related portions of the system would not prevent satisfactory accomplishment of function(s) identified for 10 CFR 54.4(a)(1). It meets 10 CFR 54.4(a)(3) because it is relied upon in safety analyses or plant evaluations to perform a function that demonstrates compliance with the Commission's regulations for Fire Protection (10 CFR

50.48) and Station Blackout (10 CFR 50.63). The Service Water Intake Ventilation System is not relied upon in any safety analyses or plant evaluations to perform a function that demonstrates compliance with the Commission's regulation for Environmental Qualification (10 CFR 50.49) and Anticipated Transient Without Scram (10 CFR 50.62).

System Intended Functions

1. Provide heat removal from safety-related equipment. The Service Water Intake Ventilation System removes waste heat from the Service Water System components located in the Service Water Intake Structure to maintain temperature limits. 10 CFR 54.4(a)(1).

2. Relied upon in safety analyses and plant evaluations to perform a function that demonstrates compliance with the Commission's regulations for Fire Protection (10 CFR 50.48). The Service Water Intake Ventilation System supports the operation of the Service Water System during postulated fire events. 10 CFR 54.4(a)(3)

3. Relied upon in safety analyses or plant evaluations to perform a function that demonstrates compliance with the Commission's regulations for Station Blackout (10 CFR 50.63). The Service Water Intake Ventilation System supports the operation of the Service Water System during restoration from a Station Blackout event. 10 CFR 54.4 (a)(3)

UFSAR References

9.4.7.1

License Renewal Boundary Drawings

LR-M-81-0, Sheet 1

Table 2.3.3-26 Service Water Intake Ventilation System Components Subject to Aging Management Review

Component Type	Intended Function
Bird Screen	Filter
Bolting	Mechanical Closure
Damper Housing	Pressure Boundary
Ducting and Components	Pressure Boundary
Fan Housing	Pressure Boundary
Flexible Connection	Pressure Boundary
Louver	Pressure Boundary
Piping and Fittings	Pressure Boundary
Sensor Element	Pressure Boundary
Valve Body	Pressure Boundary

The aging management review results for these components are provided in:

Table 3.3.2-26 Service Water Intake Ventilation System Summary of Aging Management Evaluation

2.3.3.27 Service Water System

System Purpose

The Service Water System is a normally operating open loop cooling system designed to provide cooling water from the Delaware River, the ultimate heat sink, to perform both safety-related and nonsafety-related functions. The Service Water System consists of the following plant subsystems: station service water system, service water screens and backwash system and service water hypochlorination system. The Service Water System is in scope for License Renewal. However, portions of the Service Water System are not required to perform intended functions and are not in scope. The Service Water System has several interfaces with other systems that are not in the license renewal boundary of the Service Water System.

The purpose of the Service Water System is to provide river water cooling for the closed loop cooling water systems, safety and turbine auxiliary cooling system (SACS) and the reactor auxiliary cooling system (RACS). The reactor auxiliary cooling plant system heat exchanger shell side components are evaluated with the Closed Cycle Cooling Water System. The Service Water System accomplishes its purpose by supplying strained river water from the ultimate heat sink (evaluated with the Service Water Intake Structure) to the tube side of the SACS and RACS heat exchangers and discharging the heated water to the cooling tower basin or overboard discharge. During normal operating conditions and loss of offsite power conditions the Service Water System provides river water cooling to SACS and RACS. During a loss-of-coolant accident (LOCA) and other design basis accidents, the Service Water System provides river water only to SACS, and RACS is automatically isolated. The Service Water System operation is initiated manually or automatically. Automatic operation includes Service Water System pump starts and isolation of nonsafety-related components.

System Operation

The Service Water System is comprised of two independent loops, each with two main pumps that supply river water to a separate safety and turbine auxiliary cooling system (SACS) loop. Either one of these service water loops can be used for cooling the reactor auxiliary cooling system (RACS) heat exchangers. Each redundant service water loop is comprised of traveling water screens, pumps, strainers, piping, valves, heat exchangers, rupture disks, controls and instrumentation. The pumps in this System are the service water pumps taking suction directly from the river, spray water booster pumps used for removing debris from the traveling water screens and a dewatering pump located in the reactor building for pumping down the service water drain tank to support maintenance activities.

River water flows through a common trash rack (evaluated with the Service Water Intake Structure) and flows into separate pump sumps. Each Service Water sump is provided with a traveling water screen to prevent large debris from passing further into the system. A self-cleaning strainer located downstream of each Service Water pump is provided to remove small particles from the pump discharge to prevent heat exchangers from clogging. The strainer, traveling water screen and the spray water booster pump operate continuously when the associated service water pump is running. Each loop is equipped with two service water pumps in parallel that discharge to an underground seismic category I header and flows to the reactor building. Each service water loop header flows to a separate SACS loop heat exchangers and through crosstie valves to the RACS heat exchangers. The effluent from the heat exchangers discharges through seismic lines and then to a common, non-seismic

category I header located outside of the reactor building. Water from the header discharges to the cooling tower basin and serves as makeup for the Circulating Water System. In the event of a failure that causes blockage in the non-seismic discharge line to the cooling tower, service water discharge from the SACS heat exchangers is diverted separately to the yard through seismic category I overboard discharge lines. The overboard discharges are emergency bypass lines provided with motor operated valves that automatically open if the non-seismic category I discharge line has gradual blockage. However, for a sudden blockage, rupture disks are installed in parallel with the motor operated valves and are rated to rupture, which allows discharge to the yard.

During normal plant operation, two station service water pumps, one in each loop, are required. The second pump in each loop is on standby and starts automatically if the operating pump in that loop fails. The number of service water pumps required to be in service depends on the river water temperature and the SACS and RACS heat loads. Each service water pump, its associated motor operated discharge valve, and traveling water screen form a load group that receives control and power supplied from a corresponding channel of Class 1E power systems. The pump discharge motor operated valves are interlocked to automatically open on a pump start.

During emergency plant operation such as loss-of-coolant accident (LOCA) concurrent with Loss of Offsite Power (LOP), all four service water pumps with corresponding traveling water screens and strainers are automatically started, powered by standby diesel generators to provide flow through the redundant cooling water loops to the SACS heat exchangers. The three valves connected to the common header supplying the RACS heat exchangers and the common outlet valve automatically close in the event of a LOCA or a signal from the RACS room flooding instrumentation. In the event of a LOP without a LOCA, all four service water pumps start to cool all SACS and RACS heat exchangers. However, only one service water loop with two pumps is required to safely shut down the plant.

Service water pump bearing lubrication is supplied from a branch connection off of the Service Water System downstream of the strainer. The lubrication water leaves the pumps from the bottom bearings and drains to the pump sumps.

The traveling water screens are cleaned with strained water supplied by the spray water booster pumps (one pump per traveling water screen). These pumps are capable of being crosstied to clean the alternate traveling water screen in that loop. The screens are also provided with an air driven bubbler level monitoring system for automatic screen speed selection if the differential water level across the screen is too high. The level monitoring system consists of air compressors, a tank and flow control stations and dip tubes. The air is routed to four individual flow control stations and through two dip tubes, one at each side of the screens. Under a loss of air flow condition the associated traveling water screen will automatically shift to high speed. This feature eliminates the need for the compressors and flow control station to be safety related. However the dip tubes on each side of the screens are safety related because their structural failure could affect traveling water screen operation. The traveling water screens are considered active short-lived components. The traveling screens are structurally supported by embedded slots at each of the pump bays which are evaluated with the Service Water Intake Structure.

Biological growth in the Service Water System is prevented by the injection of a dilute solution of sodium hypochlorinate. The system mixes river water with sodium hypochlorite for injection to the Service Water System downstream of the traveling water screen. The service water

hypochlorination system and structures are located east of the Service Water Intake Structure. The service water hypochlorination structures are evaluated with the Service Water Intake Structure.

The Service Water System has connections to supply an emergency backup source of water to the Residual Heat Removal (RHR) System, fuel pool water inventory and SACS expansion tank. This section of the Service Water System also has a fire hose fill connection to supply fresh water into the system.

A drain tank and a dewatering pump located in the Reactor Building are part of the Service Water System and are used during maintenance activities to keep relatively dirty, chlorinated river water from entering the Reactor Building sump and being processed as radwaste.

Ventilation for service water components located in the service water iIntake structure is evaluated with the Service Water Intake Ventilation System.

Service water intake structure drainage is evaluated with the Equipment and Floor Drainage Systems.

For more detailed information, see UFSAR Sections 7.3.1.1.11.1 and 9.2.1.

System Boundary

The Service Water System boundary begins at the traveling water screens and continues through to the service water pumps, associated check valves, strainers and pump discharge motor operated valves. It continues to the underground supply headers to the designated Safety and Turbine Auxiliary Cooling System (SACS) heat exchangers and through crosstie valves to the reactor auxiliary cooling system (RACS) heat exchangers located in the reactor building. The boundary continues through the heat exchangers to an underground discharge header located outside of the reactor building and terminates at the attachment to the cooling tower basin. Included in the Service Water System boundary is an alternate flow path for service water discharge from the SACS heat exchangers through the overboard discharge piping.

The Service Water System boundary also includes the branch connections for the service water pump bearing lubrication water, the service water strainer backwash system, and a crosstie line from the service water loops at the intake structure to provide dilution water for the service water hypochlorination system.

In addition the Service Water System boundary includes the spray water booster pumps for the traveling water screen spray water and the piping for the sodium hypochlorite solution which injects downstream of the traveling water screens which are located at the intake structure. The Service Water System boundary also includes a service water drain tank and dewatering pump located in the reactor building.

All associated piping, components, and instrumentation contained within the flowpath described above are also included in the service water boundary.

Included in the license renewal scoping boundary of the Service Water System are those portions of nonsafety-related piping and equipment that extend beyond the safety-related/nonsafety-related interface up to the location of the first seismic anchor, or to a point

no longer in proximity to equipment performing a safety-related function, whichever extends furthest. This includes the nonsafety-related portions of the system located within the service water intake structure and the reactor building such as the service water strainer backwash piping and the service water drain tank and dewatering pump. Included in this boundary are pressure retaining components relied upon to preserve the leakage boundary intended function of this portion of the system. For more information, refer to the license renewal boundary drawing for identification of this boundary, shown in red.

The service water trash racks upstream of the traveling water screens as well as the structural support for the traveling screens are evaluated with the Service Water Intake Structure.

Not included in the Service Water System license renewal scoping boundary are the following interfacing systems, which are separately evaluated as license renewal systems:

Closed Cycle Cooling Water System
Residual Heat Removal System
Fuel Pool Cooling and Cleanup System
Circulating Water System
Service Water Intake Ventilation System
Equipment and Floor Drainage Systems

The service water hypochlorination system function of injecting sodium hypochlorite to preserve the heat exchanger function by preventing biofouling is not required to support any intended functions. Failure of the service water hypochlorination system does not impact the operability of the Service Water System. The chlorination function is not required to support any service water intended functions for license renewal and therefore, is not in the scope of license renewal.

The instrumentation and logic for the traveling water screen differential level monitoring is designed such that under a loss of air flow condition the associated traveling water screen will automatically shift to high speed. This design feature eliminates the need for the compressors and flow control station to be in the scope of license renewal since the failure of these components will not impact operability or any intended functions of the Service Water System. However the dip tubes on each side of the screens are safety related because their structural failure could affect traveling water screen operation.

Reason for Scope Determination

The Service Water System meets 10 CFR 54.4(a)(1) because it is a safety-related system that is relied on to remain functional during and following design basis events. It meets 10 CFR 54.4(a)(2) because failure of nonsafety-related portions of the system could prevent satisfactory accomplishment of function(s) identified for 10 CFR 54.4(a)(1). It meets 10 CFR 54.4(a)(3) because it is relied upon in the safety analyses and plant evaluations to perform a function that demonstrates compliance with the Commission's regulations for for Fire Protection (10 CFR 50.48), Environmental Qualification (10 CFR 50.49), and Station Blackout (10 CFR 50.63). The Service Water System is not relied upon in any safety analyses or plant evaluations to perform a function that demonstrates compliance with the Commission's regulations for Anticipated Transient Without Scram (10 CFR 50.62).

System Intended Functions

1. Provide heat removal from safety related heat exchangers. Provides river water from the ultimate heat sink to remove heat from the safety and turbine auxiliary cooling system heat exchangers. Also provides strained water for the service water pump bearing lubrication, and traveling water screen cleaning. 10 CFR 54.4(a)(1)

2. Provide emergency heat removal from primary containment and provide containment pressure control. In Residual Heat Removal mode of containment cooling, the Service Water provides river water from the ultimate heat sink to remove heat from the Residual Heat Removal heat exchanger via the safety and turbine auxiliary cooling system. 10 CFR 54.4(a)(1)

3. Resist nonsafety related SSC failure that could prevent satisfactory accomplishment of a safety related function. The Service Water System includes nonsafety-related water filled lines located at the service water intake structure and in the reactor building that have the potential for spatial interactions (spray or leakage) with safety-related system, structure or components.10 CFR 54.4(a)(2)

4. Relied upon in safety analyses or plant evaluations to perform a function that demonstrates compliance with the Commission's regulations for Fire Protection (10 CFR 50.48). Provides river water cooling during post-fire safe shutdown. 10 CFR 54.4(a)(3)

5. Relied upon in safety analyses or plant evaluations to perform a function that demonstrates compliance with the Commission's regulations for Environmental Qualification (10 CFR 50.49). Service Water valves located in the reactor building are designed to accomplish their safety-related function during exposure to the applicable environmental conditions. 10 CFR 54.4(a)(3)

6. Relied upon in safety analyses or plant evaluations to perform a function that demonstrates compliance with the Commission's regulations for Station Blackout (10 CFR 50.63). Provides river water cooling during station blackout recovery phase. 10 CFR 54.4(a)(3)

UFSAR References

7.3.1.1.11.1
9.2.1
9.2.8
Table 3.2-1

License Renewal Boundary Drawings

LR-M-10-1, Sheet 1
LR-M-10-1, Sheet 2
LR-M-10-1, Sheet 3
LR-M-10-1, Sheet 4
LR-M-13-1, Sheet 1
LR-M-24-0, Sheet 3

Table 2.3.3-27 Service Water System
Components Subject to Aging Management Review

Component Type	Intended Function
Bolting	Mechanical Closure
Diffuser	Direct Flow
Heat Exchanger Components (RACS)	Leakage Boundary
Heat Exchanger Components (SACS)	Heat Transfer
Heat Exchanger Components (SACS)	Pressure Boundary
Piping and Fittings	Leakage Boundary
Piping and Fittings	Pressure Boundary
Pump Casing (SW Dewatering)	Leakage Boundary
Pump Casing (SW main pump)	Pressure Boundary
Pump Casing (Spray Water Booster)	Pressure Boundary
Rupture Disks	Pressure Boundary
Spray Nozzles	Spray
Strainer Body	Pressure Boundary
Tanks (Drain)	Leakage Boundary
Thermowell	Pressure Boundary
Traveling Water Screen Support Structure	Evaluated with the Service Water Intake Structures
Valve Body	Leakage Boundary
Valve Body	Pressure Boundary

The aging management review results for these components are provided in:

Table 3.3.2-27 Service Water System
Summary of Aging Management Evaluation

2.3.3.28 Standby Diesel Generator Area Ventilation Systems

System Purpose

The Standby Diesel Generator Area Ventilation System is a normally operating mechanical system designed to provide proper environmental conditions within each of the compartments contained in the Auxiliary Building Control/Diesel Structure. The Standby Diesel Generator Area Ventilation System consists of the following plant systems: diesel area safety-related battery room exhaust systems, switchgear room cooling systems, diesel area class 1E panel room supply system, standby diesel generator room recirculation system, battery room supply system, diesel area supply system, diesel area exhaust system, diesel area nonsafety-related battery exhaust system, and unit heaters located throughout the standby diesel generator area.

The purpose of the Standby Diesel Generator Area Ventilation System is to maintain compartment environmental conditions using cooling, heating and ventilation throughout the diesel portion of the auxiliary building control/diesel generator area building. The Standby Diesel Generator Area Ventilation System accomplishes this purpose by regulating temperature and ventilating air in the diesel building compartments during normal and accident conditions.

System Operation

The diesel area safety-related battery room exhaust plant systems consists of four 100% capacity safety related fans located on elevation 146' and two 100% capacity safety-related fans located on elevation 163'. The four trains located on elevation 146', consists of a tornado damper, ductwork, controls, dampers and instruments. The flow path for these four safety-related battery room trains start at the intake registers from each of the four battery compartments, continuing through ductwork, into the suction of the exhaust fan, through the shutoff and tornado dampers and exhaust outside the building. The battery room exhaust systems exhaust air continuously from these four battery rooms. The fans are started by handswitches located on the local panel. A low flow computer input actuates an alarm in the main control room upon low airflow conditions. The one safety-related train located on elevation 163', consists of a tornado damper, ductwork, controls, dampers and instruments. The flow path for these two safety-related battery room trains start at the intake registers from each of the two battery compartments, into a common header continuing through ductwork, into the suction of the exhaust fans, through the shutoff and tornado dampers and exhaust outside the building. A low flow computer input actuates an alarm in the main control room upon loss of airflow and starts the redundant fan automatically. There is a cross-tie connecting the exhaust ductwork from both trains together requiring only one 100% capacity fan to be in-service to ventilate each of the battery compartments. The diesel area safety-related battery room exhaust plant systems are designed to maintain battery room compartment temperatures.

There are four switchgear rooms, each having a cooling system. Each switchgear room cooling plant system consists of a 100% capacity fan, roughing filter, in-duct chilled water cooling coils, in-duct electric heating coils, dampers, instruments and controls. The switchgear room cooling plant system is safety-related and designed to provide cooled, filtered fresh and recycled air to the switchgear room, emergency diesel control room, battery room, and battery charger rooms. The Control Area Chilled Water System provides the chilled water to the

cooling coils. The general airflow path takes outside and recycled air and passes the air through the filter unit and chilled water cooling coil. Flow continues through the supply fan providing air to the battery and switchgear rooms. A portion of the air enters into the battery compartment rooms. The air can be heated by an in-duct safety-related electric heating coil to maintain switchgear temperatures in the safety related battery compartments. The switchgear room cooling plant system is designed to maintain compartment temperatures. The low flow switch for each fan actuates an alarm at the local panel, and in the main control room.

The diesel area class 1E panel room supply plant system consists of two separate trains each containing a 100% capacity safety-related fan, intake tornado damper, ductwork, low and high capacity filters, in-duct chilled water cooling coils, in-duct electric heating coils (entering the battery compartments), dampers, instrument and controls. Both trains are tied together at their supply ductwork, but isolated by normally closed dampers. The discharge ductwork from both trains connects to a common discharge ductwork feeding the battery rooms, inverter compartments and corridors with filtered, tempered air. The general flow path takes outside air, filters it, heats or cools the air and supplies it to the battery rooms, inverter rooms, control equipment compartments or corridors. The air can be heated by an electric in-duct safety-related heating coil which is part of the filter housing to maintain diesel area equipment compartment temperatures. The air can be cooled by induct cooling coils. The safety-related Control Area Chilled Water System supplies the chilled water for the cooling coils, and is evaluated with the Control Area Chilled Water System. Normally one train is operating and the remaining train is in standby. The low flow switch actuates a local alarm upon loss of airflow and starts the standby unit. The diesel area class 1E panel room supply plant system is designed to maintain compartment temperatures for the control equipment rooms, inverter rooms, battery charger rooms and diesel generator within acceptable limits.

The standby diesel generator room recirculation plant system consists of four emergency diesel compartment ventilating systems. Each ventilation system is comprised of two safety related trains. Each train contains a 100% capacity recirculation fan, two in-duct cooling coils, ductwork, dampers, instruments and controls. Cooling is supplied by the safety auxiliary cooling system, and is evaluated with the Closed Cycle Cooling Water System. The general flow path takes air from the diesel generator compartment, cools it and re-circulates the air back into the diesel compartment. The standby diesel generator room recirculation systems are normally interlocked to start with the respective emergency diesel generator. They may be manually started from handswitches located at the local panel. The auto lead fan runs when the standby diesel generator runs or room temperature is high. The auto standby fan runs if the auto lead fan fails, or when the standby diesel generator runs and room temperature is high. The low flow switch across the operating fan actuates an alarm upon loss of airflow. The standby diesel generator room recirculation plant system is designed to maintain compartment temperatures at or below 120° F when the diesel generators are in-service.

The battery room supply plant system electric in-duct heaters consist of both safety and non-safety related heaters to maintain the battery room compartment at design temperature conditions. Airflow is provided by the switchgear room unit cooling plant system for elevation 146', or the diesel area class 1E panel room supply plant system for elevation 163'. The air can be heated by an in-duct safety-related electric heating coil to maintain temperatures in the safety related battery compartments or nonsafety-related electric heating coils to maintain temperatures for nonsafety-related battery compartments. Individual thermostats control the induct heaters. During loss of offsite power, duct heaters for safety-related battery rooms are automatically connected to emergency Class 1E power. The battery room supply plant system operates only if the room temperature drops below a preset temperature.

The diesel area supply plant system consists of two nonsafety-related trains. Each train contains a 50% capacity nonsafety-related fan, roughing and high capacity filters, electric heating coils, ductwork, controls and dampers. Normally both nonsafety-related trains are in service. The general airflow path is taking outside air, filtering it and heating the air if required and discharging the air into the emergency diesel area corridors, stairwells and electrical chases. The diesel area supply plant system operates continuously to provide filtered and tempered outdoor air to maintain satisfactory ambient conditions.

The diesel area exhaust plant system consists of two nonsafety-related 50% capacity exhaust fans, ductwork, dampers, instruments and controls. Both diesel area exhaust fans are normally in service exhausting air from the emergency diesel area corridors, fuel oil storage rooms, electrical chases, emergency diesel generator rooms and stairwells. The fans discharge outside the building and into the atmosphere. The general airflow path is to remove air from the diesel area, and exhaust the air outside of the building. Upon loss of airflow, the low flow switch for each fan actuates an alarm on a local panel. The diesel area exhaust plant system exhausts air continuously from all spaces supplied by the diesel area supply plant system.

The diesel area nonsafety-related battery room exhaust plant system consists of two nonsafety-related, 100% capacity exhaust fans. One fan is normally operating with the second fan in standby. The airflow path starts at the inlet registers flowing through the ductwork, into the suction of the exhaust fans, through the shutoff and tornado dampers and exhausting outside the building. The two nonsafety-related battery rooms have common exhaust ductwork used to connect both of the exhaust fans together. A low flow computer input actuates an alarm in the main control room upon loss of airflow, and automatically starts the redundant fan.

The unit heaters consist of electric heating coils that are controlled by local room thermostats. These nonsafety-related unit heaters are located throughout the Auxiliary Building Control/Diesel Generator Area. The unit heaters run only when the room temperature drops to 60° F. These nonsafety-related heaters are not in scope for license renewal. Safety-related areas that require heating are provided with safety-related in-duct electric heaters as previously described.

For more detailed information, see UFSAR Section 9.4.6.

System Boundary

The diesel area safety-related battery room exhaust plant systems consists of two separate battery compartment exhaust fan systems located on two different elevations within the auxiliary building control/diesel structure. One system provides ventilation for battery rooms located on elavation 163' system and the other system provides ventilation for battery rooms located on the 146' elevation.

The system boundary for the battery rooms located on elevation 163', begins at the room compartments inlet registers and continues through the ductwork leading to the diesel area battery exhaust fans. The system boundary continues through the exhaust fan and through the discharge ductwork, dampers and a tornado damper. The system boundary ends at the discharge ductwork as it exhausts outdoors.

The system boundary for the battery rooms located on elevation 146', begins at the room compartment inlet registers. The system boundary continues to the inlet of the exhaust fan, through the fan, discharge ductwork and through the dampers and tornado dampers. The system boundary ends at the discharge ductwork as it exhausts outdoors.

The switchgear room cooling plant systems boundary begins at the outdoor intake louver, which includes the tornado and isolation dampers, intake ductwork, and switchgear room unit cooler. The system boundary continues through the switchgear room unit cooler, containing a low efficiency filter and the two chilled water-cooled cooling coils and a supply fan. The system boundary continues through the supply fan then splits into two duct headers, feeding either the switchgear room or the safety-related battery room. For the switchgear room the boundary ends at the return room registers in the switchgear compartments. The system boundary for the battery room continues past an electric in-duct heater with the system boundary ending at the discharge registers to the battery rooms.

The diesel area class 1E panel room supply plant system boundary begins at the inlet louver of the auxiliary building which includes a tornado damper and control damper, inlet ductwork leading to the diesel area panel room supply unit. Also included is a crosstie connecting both of the trains supply ductwork together. The system boundary continues through the diesel area class 1E panel room supply unit, which contains a low and high particulate filter, electric heating coil, chilled water coil and the supply fan. The chilled water cooling coil is supplied from the Control Area Chilled Water System. The coils are evaluated with the Control Area Chilled Water System. The system boundary continues through the supply fan, through the discharge ductwork, into the battery rooms, which contain an in-duct heating coil, inverter rooms, control equipment rooms and the common corridor. The system boundary ends at the room discharge registers.

The standby diesel generator room recirculation plant system boundary begins at the inlet registers located in the diesel generator rooms. The system boundary continues through the inlet ductwork, cooling coil and recirculation fan and the exhaust ductwork. The system boundary ends back at the discharge registers located in each of the diesel compartments.

The boundary for the safety related portions of the battery room supply plant system electric in-duct heaters begins at the ductwork from the switchgear room unit coolers, which contain the in-duct safety-related electric heaters. Airflow from the switchgear room unit cooler passes over the in-duct electric heaters to maintain air temperatures. The system boundary ends as air exhausts from the discharge registers into each of the battery compartments.

Not included in the scope of license renewal is the nonsafety-related portions of the battery room supply plant system. This plant system is not safety-related and does not perform or required to support license renewal intended functions and is not included in the scope of license renewal. Failure of this system will not prevent satisfactory accomplishment of any of the intended functions of the safety-related portions of the Standby Diesel Generator Area Ventilation System.

Not included in the scope of license renewal is the diesel area nonsafety-related battery room exhaust plant system. The diesel area supply plant system boundary begins at the inlet louver of the auxiliary building continues to the supply fan housing containing low and high efficiency filters, electric heating coil and supply fan. The boundary continues from the fan housing and through the supply ductwork with the boundary ending at the nonsafety-related compartment air registers in the diesel area. This plant system does not perform or required to support

license renewal intended functions and therefore is not included in the scope of license renewal. Failure of this system will not prevent satisfactory accomplishment of any of the intended functions of the safety-related portions of the Standby Diesel Generator Area Ventilation System.

Not included in the scope of license renewal is the diesel area exhaust plant system, which is nonsafety-related. The diesel area exhaust plant system boundary begins at the return registers from the nonsafety-related diesel area compartments, and continues through the exhaust ductwork to the fan housing. The boundary continues from the fan housing and through the exhaust ductwork with the boundary ending as it exhausts outdoors. This plant system does not perform or required to support license renewal intended functions and therefore not included in the scope of license renewal. Failure of this system will not prevent satisfactory accomplishment of any of the intended functions of the safety-related portions of the Standby Diesel Generator Area Ventilation System.

Not included in the scope of license renewal is the diesel area nonsafety-related battery room exhaust plant system, which is nonsafety-related. The diesel area nonsafety-related battery room exhaust plant system boundary begins at the two nonsafety-related battery compartments return registers, through the exhaust ductwork to the exhaust fan. Flow continues from the exhaust fan through the discharge ductwork and the boundary ends as it exhausts outdoors. This plant system does not perform or required to support license renewal intended functions and therefore not included in the scope of license renewal. Failure of this system will not prevent satisfactory accomplishment of any of the intended functions of the safety-related portions of the Standby Diesel Generator Area Ventilation System.

Not included in the Standby Diesel Generator Area Ventilation System license renewal scoping boundary are the following interfacing systems, which are evaluated as separate license renewal systems:

Closed Cycle Cooling Water System
Control Area Chilled Water System

Reason for Scope Determination

The Standby Diesel Generator Area Ventilation System meets 10 CFR 54.4(a)(1) because it is a safety-related system that is relied upon to remain functional during and following design basis events. The Standby Diesel Generator Area Ventilation System is not in scope under 10 CFR 54.4(a)(2) because failure of nonsafety-related portions of the system would not prevent satisfactory accomplishment of functions(s) identified for 10 CFR 54.4(a)(1). It also meets 10 CFR 54.4(a)(3) because it is relied upon in safety analyses or plant evaluations to perform a function that demonstrates compliance with the Commission's regulations for Fire Protection (10 CFR 50.48) and Station Blackout (10 CFR 50.63). The Standby Diesel Generator Area Ventilation System is not relied upon in any safety analyses or plant evaluations to perform a function that demonstrates compliance with the Commission's regulations for Environmental Qualification (10 CFR 50.49), or Anticipated Transient Without Scram (10 CFR 50.62).

System Intended Functions

1. Maintain emergency temperature limits within areas containing safety-related components. The Standby Diesel Generator Area Ventilation System maintains operating conditions for safety-related equipment (diesel area safety-related battery room exhaust plant systems, switchgear room cooling plant systems, diesel area class 1E panel room supply plant systems, standby diesel generator room recirculation plant system, battery room supply plant system) within the ventilation boundary. 10 CFR 54.4 (a)(1)

2. Relied upon in safety analysis or plant evaluations to perform a function that demonstrates compliance with the Commission's regulations for Fire Protection (10 CFR 50.48). The Standby Diesel Generator Area Ventilation System provides ventilation for equipment required during safe shutdown. 10CFR 54.4 (a)(3)

3. Relied upon in safety analysis or plant evaluations to perform a function that demonstrates compliance with the Commission's regulations for Station Blackout (10 CFR 50.63). The diesel area safety-related battery room exhaust plant system, switchgear room cooling plant system, diesel area class 1E panel room supply plant system, standby diesel generator room recirculation plant system and safety-related battery room supply plant system provide environmental controls on loss of power event. 10 CFR 54.4 (a)(3)

UFSAR References

9.4.6

License Renewal Boundary Drawings

LR-M-88-1, Sheet 1
LR-M-88-1, Sheet 2

Table 2.3.3-28 Standby Diesel Generator Area Ventilation Systems Components Subject to Aging Management Review

Component Type	Intended Function
Bolting	Mechanical Closure
Damper Housing	Pressure Boundary
Door Seal	Pressure Boundary
Ducting and Components	Pressure Boundary
Electric Heaters (Housing)	Pressure Boundary
Fan Housing	Pressure Boundary
Filter Housing	Pressure Boundary
Flexible Connection	Pressure Boundary
Flow Device	Pressure Boundary
Flow Element	Pressure Boundary
Heat Exchanger Components (Class 1E Diesel Area Panel Room Supply System)	Evaluated with the Control Area Chilled Water System
Heat Exchanger Components (Diesel Generator Room Recirc System)	Evaluated with the Closed Cycle Cooling Water System
Louver	Pressure Boundary
Piping and Fittings	Pressure Boundary
Thermowell	Pressure Boundary
Valve Body	Pressure Boundary

The aging management review results for these components are provided in:

Table 3.3.2-28 Standby Diesel Generator Area Ventilation Systems Summary of Aging Management Evaluation

2.3.3.29 Standby Diesel Generators and Auxiliary Systems

System Purpose

Standby Diesel Generators and Auxiliary Systems are standby mechanical systems designed to provide power to Class 1E and selected non-Class 1E loads that are needed for safe and orderly shutdown of the reactor, maintaining the plant in a safe shutdown condition and mitigating the consequences of the design bases accident in the event that the preferred power is not available. The Standby Diesel Generators and Auxiliary Systems are in the scope of license renewal.

The purpose of the Standby Diesel Generators and Auxiliary Systems is to independently provide sufficient power to energize all equipment required for safely shutting down the reactor. The Standby Diesel Generators and Auxiliaries System accomplishes this purpose by utilizing diesel engines to rotate electric generators attached to the diesel engines. The system uses four diesel generator units located in separate rooms of the Auxiliary Building. Each standby diesel generator is equipped with self-contained auxiliary support systems that include startup air, jacket water cooling, engine lubricating oil, intercooler and injector cooling, crankcase vacuum, combustion air intake and exhaust, and diesel fuel oil storage and transfer.

Each diesel engine will be automatically started under loss of coolant accident conditions (reactor low-low level, a high drywell pressure signal), and or loss of power condition, (undervoltage condition in the 4160V AC System), or by Core Spray System manual initiation.

System Operation

The Standby Diesel Generators and Auxiliary Systems are comprised of four diesel driven generators and associated auxiliary equipment. The sizing of the standby diesel generators and loads assigned among them is such that any combination of three out of four of these standby diesel generators is capable of shutting down the plant safely. Each diesel engine powers a generator at a voltage compatible to the plant electrical distribution systems. Each standby diesel generator is equipped with self-contained auxiliary support systems that include startup air, jacket water cooling, intercooler and injector cooling, engine lubricating oil, crankcase vacuum, combustion air intake and exhaust, and diesel fuel oil storage and transfer. The standby diesel generators with their auxiliaries are located in separate rooms within the Auxiliary Building. Also included in the diesel assembly are directly attached piping, valves, starters, fans, filters, speed governor, instrumentation and other equipment. The diesels are automatically started under loss of coolant accident conditions (reactor low-low level, high drywell pressure signal), and or loss of power condition, which is an under voltage condition in the 4160V AC System, or by Core Spray System manual initiation. The diesels can be manually started remotely from the control room and the 1E switchgear room or at the local standby diesel generator switchgear panels. The safety function of the standby diesel generator is to supply emergency power to components and systems required for safe and orderly shutdown of the reactor when normal power is not available.

Each standby diesel generator startup air auxiliary system consists of an air compressor, air dryer, two air receiver tanks, filters, shutdown tank, valves and piping. The two air receiver tanks provide redundancy for the starting air system. The safety function of the startup air auxiliary system is to provide for reliable starting of the standby diesel generators.

Each standby diesel generator jacket water cooling auxiliary system consists of a closed loop cooling system that removes heat from the diesel engine and maintains the operating temperature for each diesel engine. The engine-driven jacket water pump circulates cooling water through the engine headers and turbocharger via a three-way thermostatically controlled valve. The three-way valve directs the water through the standby diesel generator jacket water heat exchanger where the water is cooled by the Closed Cycle Cooling Water System. The heat exchangers are evaluated with the Closed Cycle Cooling Water System. If the water temperature is too low, the valve automatically bypasses the diesel generator jacket water heat exchanger. The jacket water keep warm pump maintains the jacket water temperature when the standby diesel generator is in standby. The jacket water expansion tank accommodates thermal expansion of the process fluids in the jacket water and intercooler and injector cooling. Makeup to the jacket water expansion tank comes from the Demineralized Water System. The safety function of the jacket water cooling auxiliary system is to remove excess heat from the engine and its accessory components, and to maintain the temperature of the system in the normal operating range.

The safety function of the standby diesel generator auxiliary intercooler and injector cooling auxiliary system is to remove excess heat of compression from the combustion air during engine operation. The system also removes heat from the engine fuel injectors and outboard bearings on the generator. The system has engine driven intercooler and injector cooling pumps, three-way thermostatically controlled valve and an intercooler heat exchanger. Cooling water for the intercooler heat exchanger is provided by the Closed Cycle Cooling Water System. The heat exchangers are evaluated with the Closed Cycle Cooling Water System.

The safety function of the standby diesel generator lubrication system is to supply oil continuously to all surfaces requiring lubrication. Each standby diesel generator is lubricated by a closed-cycle engine lube oil auxiliary system. Lube oil is pumped from an engine driven pump through a three-way valve, the lube oil cooler, a strainer, and back to the engine. A motor driven lube oil keep warm pump, heater and filter are also included in the loop. A lube oil makeup tank stores fresh lube oil for use in replacing the oil that is consumed and/or lost during operation of the engine. Cooling water for the lube oil cooler is provided by the Closed Cycle Cooling Water System. The heat exchangers are evaluated with the Closed Cycle Cooling Water System.

The safety function of the auxiliary crankcase vacuum, and combustion air intake and exhaust auxiliary system is to supply combustion air of reliable quality to the diesel engines, and exhaust the products of combustion from the diesel engine to the atmosphere. The system has an air intake filter, silencer, and engine driven turbochargers.

The standby diesel generator diesel fuel oil storage and transfer system is required to support the sustained operation of the diesel engine. The safety function of the diesel fuel oil storage and transfer system is to provide an uninterrupted supply of fuel oil to the standby diesel generators in the event of a design basis accident. The system has two diesel fuel oil storage tanks. Each tank has a fuel oil transfer pump that maintains level on the diesel fuel oil day tank. Interconnections are provided to enable the fuel oil storage and transfer supply from any one engine to service the day tank of another engine.

The Standby Diesel Generator Area Ventilation System provides sufficient outside airflow through the diesel generator rooms and control area to maintain temperatures within suitable range to assure reliable operation of the diesel-generators and their associated equipment.

The Standby Diesel Generator Area Ventilation System is evaluated as a separate system for license renewal.

For more detailed information, see UFSAR sections 8.3.1.1.3 and 9.5.4 through 9.5.8.

System Boundary

The Standby Diesel Generators and Auxiliary Systems boundary encompasses the diesel engines, startup air flow path, jacket water cooling flow path, intercooler and injector cooling flow path, engine lubricating oil flow path, crankcase vacuum, combustion air intake and exhaust flow path, and diesel fuel oil storage and transfer flow path.

The standby diesel generator startup air auxiliary system boundary begins at the air compressor and continues through an air dryer, and two air-receiver tanks and ends at the connection point to the diesel engine main air start valves.

The standby diesel generator jacket water cooling auxiliary system and the engine driven intercooler water auxiliary system are interconnected. The standby diesel generator jacket water cooling auxiliary boundary begins at the jacket water expansion tank and continues to the attachment point to the diesel engine. The jacket water continues through the engine driven jacket water pump, cooling the diesel engine and turbo, and exits the engine at two piping lines. The first line continues to the jacket water heat exchanger and returns to the diesel engine. Included also is the keep warm line that contains the jacket water motor driven keep warm pump, jacket water keep warm heater and ends at the attachment point to the diesel engine. The second line continues and connects to the engine driven intercooler water system. The engine driven intercooler water system begins at the pump discharge line, through the intercooler heat exchanger, to the cooled engine components including the outboard bearing, intercoolers and fuel injection nozzles, and returns to the engine driven intercooler water pump suction.

The standby diesel generator engine lubricating oil flow auxiliary system boundary begins at the lube oil makeup tank and continues to the lubricating oil sump. The engine oil recirculation loop begins at the suction strainer, and continues through the engine driven oil pump, flexible coupling and lube oil cooler, and returns to the engine lubricating oil sump. Additional lubricating oil system flow paths include the motor driven keep warm pump, filters, heaters, strainers, valves, instrumentation and fill and drain piping.

The crankcase vacuum, combustion air intake and exhaust auxiliary system boundary has three flow paths. The crankcase vacuum begins at the attachment point of the diesel engine continues through the oil separator and flexible connector and ends at the atmosphere vent. The air intake starts at the intake filter, includes the intake silencer and ends at the attachment point of the diesel engine. The air exhaust begins at the attachment point of the diesel engine, continues through a silencer and ends at the atmosphere vent.

The diesel fuel oil storage and transfer system boundary begins with the oil storage tanks and includes the diesel fuel pumps that take suction through individual suction headers from the oil storage tank, through the pump to the discharge piping, continues through the oil day tank, filter, and the motor driven fuel pump, and ends at the connection point to the diesel engine. Included are the interconnections that allow the storage fuel oil to be transferred from any one engine to the day tank of any another engine. Also included is the fuel oil emergency fill and overflow connection lines to the oil storage tanks.

Also included in the license renewal scoping boundary of the Standby Diesel Generators and Auxiliary Systems are those portions of nonsafety-related piping and equipment that extend beyond the safety-related/nonsafety-related interface up to the location of the first seismic anchor, or to a point no longer in proximity to equipment performing a safety-related function, whichever extends furthest. This includes the nonsafety-related portions of the system located within the Auxiliary Building. Included in this boundary are pressure retaining components relied upon to preserve the leakage boundary intended function of this portion of the system. For more information, refer to the license renewal boundary drawing for identification of this boundary, shown in red.

Not included in the Standby Diesel Generators and Auxiliary Systems license renewal scoping boundary are the following interfacing systems, which are separately evaluated as license renewal systems:

Closed Cycle Cooling Water System
Makeup Demineralizer System
Standby Diesel Generator Area Ventilation Systems

Reason for Scope Determination

The Standby Diesel Generators and Auxiliary Systems meet the scoping requirements of 10 CFR 54.4(a)(1) because it is a safety-related system which is relied upon to remain functional during and following design basis events. It meets 10 CFR 54.4(a)(2) because failure of nonsafety-related portions of the system could prevent satisfactory accomplishment of function(s) identified for 10 CFR 54.4(a)(1). It does meet 10 CFR 54.4(a)(3) because it is relied upon in the safety analyses or plant evaluations to perform a function that demonstrates compliance with the Commission's regulations for Fire Protection (10 CFR 50.48), and Station Blackout (10 CFR 50.63). The Standby Diesel Generators and Auxiliary Systems is not relied upon in any safety analyses or plant evaluations to perform a function that demonstrates compliance with the Commission's regulation for Environmental Qualification (10 CFR 50.49) and Anticipated Transient Without Scram (10 CFR 50.62).

System Intended Functions

1. Provide motive power to safety-related components. The Standby Diesel Generators and Auxiliary Systems is required to power safety-related equipment in the event normal power supplies are not available. 10 CFR 54.4(a)(1)

2. Resist nonsafety-related SSC failure that could prevent satisfactory accomplishment of a safety related function. The Standby Diesel Generators and Auxiliary Systems includes nonsafety-related water, oil, and diesel filled lines in the Auxiliary Building that have the potential for spatial interactions (spray or leakage) with safety-related SSCs. 10 CFR 54.4(a)(2)

3. Relied upon in safety analyses or plant evaluations to perform a function that demonstrates compliance with the Commission's regulations for Station Blackout (10 CFR 50.63). Standby Diesel Generators and Auxiliary Systems provide onsite power during restoration. Diesel fuel oil and transfer supports standby diesel generators operation during restoration. 10 CFR 54.4(a)(3)

4. Relied upon in safety analyses or plant evaluations to perform a function that demonstrates compliance with the Commission's regulations for Fire Protection (10 CFR 50.48). Standby Diesel Generators and Auxiliary Systems is part of Appendix R shut down method. 10CFR54.4(a)(3)

UFSAR References

9.5
8.3.1.1.3

License Renewal Boundary Drawings

LR-M-12-1, Sheet 1
LR-M-30-1, Sheet 1
LR-M-30-1, Sheet 2
LR-M-30-1, Sheet 3
LR-M-30-1, Sheet 4

Table 2.3.3-29 Standby Diesel Generators and Auxiliary Systems Components Subject to Aging Management Review

Component Type	Intended Function
Bolting	Mechanical Closure
Electric Heaters (Jacket Water)	Pressure Boundary
Electric Heaters (Lube Oil)	Pressure Boundary
Expansion Joints	Pressure Boundary
Filter Housing (Combustion Intake)	Pressure Boundary
Filter Housing (Fuel Oil)	Leakage Boundary
Filter Housing (Fuel Oil)	Pressure Boundary
Filter Housing (Lube Oil)	Pressure Boundary
Filter Housing (Start Air)	Pressure Boundary
Flame Arrestor (Conservation Vent)	Pressure Boundary
Flow Element	Pressure Boundary
Heat Exchanger Components (Intercooler)	Evaluated with the Closed Cycle Cooling Water System
Heat Exchanger Components (Jacket Water)	Evaluated with the Closed Cycle Cooling Water System
Heat Exchanger Components (Lube Oil)	Evaluated with the Closed Cycle Cooling Water System
Hoses	Pressure Boundary
Piping and Fittings	Leakage Boundary
Piping and Fittings	Pressure Boundary
Piping and Fittings	Structural Support
Pump Casing (Fuel Oil - Motor)	Pressure Boundary
Pump Casing (Fuel Oil - Storage Transfer)	Pressure Boundary
Pump Casing (Lube Oil - Keepwarm)	Pressure Boundary
Pump Casing (Rocker Lube Oil - Motor)	Pressure Boundary
Pump Casing (Water Jacket - Keepwarm Motor)	Pressure Boundary
Silencer/ Muffler	Pressure Boundary
Strainer Body	Leakage Boundary
Strainer Body	Pressure Boundary
Tanks (Air Receiver)	Pressure Boundary
Tanks (Fuel Oil Day)	Pressure Boundary
Tanks (Fuel Oil Storage)	Pressure Boundary
Tanks (Jacket Water Expansion)	Pressure Boundary

Component Type	Intended Function
Tanks (Lube Oil)	Pressure Boundary
Thermowell	Pressure Boundary
Valve Body	Leakage Boundary
Valve Body	Pressure Boundary
Valve Body	Structural Support

The aging management review results for these components are provided in:

Table 3.3.2-29 Standby Diesel Generators and Auxiliary Systems Summary of Aging Management Evaluation

2.3.3.30 Standby Liquid Control System

System Purpose

The Standby Liquid Control System is a standby and redundant sodium pentaborate injection system that is used if the normal reactivity control provisions become inoperative. The system is designed to bring the reactor to a shutdown condition at any time in core life independent of control rod capabilities. The Standby Liquid Control System operates independently from the Control Rod Drive System. The most severe requirement for which the system is designed is shutdown from a full power operating condition assuming complete failure of the Control Rod Drive System to respond to a scram signal.

The purpose of the Standby Liquid Control System is to provide sufficient capacity for controlling the reactivity difference between the steady state rated operating condition of the reactor and the cold shutdown condition, including shutdown margin, thereby ensuring complete shutdown capability from the most reactive condition, at any time in core life. The Standby Liquid Control System accomplishes this purpose by injecting sodium pentaborate solution into the reactor vessel to absorb thermal neutrons. The neutron absorber is dispersed within the reactor core in sufficient quantity to provide a reasonable margin for dilution leakage, and imperfect mixing. The Standby Liquid Control System is not provided as a backup for reactor trip functions, since most transient conditions that require reactor trip occur too rapidly to be controlled by the Standby Liquid Control System. Standby Liquid Control operation is initiated automatically by signals from Redundant Reactivity Control System or can be initiated manually.

The Standby Liquid Control System is capable of satisfying the requirements of the Standby Liquid Control System generic design basis as well as the requirement for the reduction of risks from an Anticipated Transient Without Scram (ATWS) as specified in 10 CFR 50.62 (ATWS Rule).

System Operation

The Standby Liquid Control System is comprised of an atmospheric tank for sodium pentaborate solution storage (standby liquid control tank), two separate pump suction headers which feed their respective redundant parallel high pressure positive displacement pumps, two explosive actuated shear plug valves, two motor operated stop-check shutoff valves, a common discharge header, a test tank, associated piping, valves, and instumentation and controls. The Standby Liquid Control System is manually initiated from the main control room through the use of key lock switches or automatically initiated upon receipt of a low-low reactor water or high reactor vessel dome pressure signal from the Redundant Reactivity Control System, which starts both pumps and actuates the explosive actuated valves.

The Standby Liquid Control System pumps take suction from the standby liquid control tank. Flow is provided by one or both of the positive displacement pumps. The pumps and piping are protected from overpressure by relief valves which discharge back to the associated standby liquid control pump suction line. Following system initiation, the explosive valve associated with the selected pump is actuated to provide a flowpath to the reactor vessel via the Core Spray System. The sodium pentaborate solution is pumped to the vessel through a common discharge header, through two (2) parallel motor operated stop check valves and delivered to the Core Spray System piping (evaluated with Core Spray System) which

continues to the core spray loop A sparger (evaluated with the Reactor Internals system). The solution enters the reactor vessel through the sparger inlet nozzle and is sprayed radially over the top of the core.

An electric heater is installed in the standby liquid control tank and the pump suction lines are provided with electrical heat tracing and thermal insulation to prevent crystallization of the sodium pentaborate solution. Provisions for recirculating the sodium pentaborate solution are included to assure the readiness of the standby liquid control tank and the pump suction. A test tank with demineralized water is provided for functional testing of the standby liquid control pumps and injection valves without injecting boron solution.

A standby liquid control pump starting will provide a signal to isolate the Reactor Water Cleanup System to prevent loss or dilution of the boron in the vessel through the reactor water cleanup demineralizers or through reactor water cleanup letdown.

The Standby Liquid Control System injection piping containment penetration is provided with one inboard check valve and two (2) out board motor operated primary containment isolation valves that are included in the license renewal boundary for SLC System.

For more detailed information, see UFSAR section 9.3.5.

System Boundary

The Standby Liquid Control System boundary begins with the standby liquid control tank and includes the standby liquid control positive displacement pumps, relief valves, pump discharge check valves, explosive actuated valves, two (2) parallel motor operated stop-check shutoff valves, and terminates at the attachment point on the Core Spray System piping. The boundary includes the standby liquid control tank heaters, heat trace, the standby liquid control test tank and demineralized water lines, system drain lines, and drain tank.

The Standby Liquid Control System boundary also includes the demineralized water supply line and service compressed air supply line attached to the standby liquid control tank used for the filling and mixing of the boron solution through the standby liquid control tank air sparger. This portion of the boundary extends from the standby liquid control tank out to the Standby Liquid Control System check valves located on the demineralized water and service air supply lines (evaluated with the Makeup Demineralizer System and Compressed Air System respectively).

All associated piping, components, and instrumentation contained within the flow path described above are included in the Standby Liquid Control System boundary.

Included in the license renewal boundary of the Standby Liquid Control System are those portions of nonsafety-related piping and equipment that extend beyond the safety-related/nonsafety-related interface up to the location of the first seismic anchor, or to a point no longer in proximity to equipment performing a safety-related function, whichever extends furthest. This includes the nonsafety-related portions of the system located within the Reactor Building. Also included in the boundary are pressure-retaining components located in the Reactor Building relied upon to preserve the leakage boundary intended function of the system. For more information, refer to the license renewal boundary drawing for identification of this boundary, shown in red.

Not included in the scoping boundary of the Standby Liquid Control System is the core spray loop A sparger, which is evaluated with the Reactor Internals.

Not included in the Standby Liquid Control System license renewal scoping boundary are the following interfacing systems, which are separately evaluated as license renewal systems:

Core Spray System
Makeup Demineralizer System
Compressed Air System
Primary Containment

Reason for Scope Determination

The Standby Liquid Control System meets 10 CFR 54.4(a)(1) because it is a safety-related system that is relied upon to remain functional during and following design basis events. It does meet 10 CFR 54.4(a)(2) because failure of nonsafety-related portions of the system could prevent satisfactory accomplishment of functions identified for 10 CFR 54.4(a)(1). It also meets 10 CFR 54.4(a)(3) because it is relied upon in the safety analyses or plant evaluations to perform a function that demonstrates compliance with the Commission's regulations for Environmental Qualification (10 CFR 50.49), Anticipated Transient Without Scram (10 CFR 50.62), and Station Blackout (10 CFR 50.63). The Standby Liquid Control System is not relied upon in any safety analyses or plant evaluations to perform a function that demonstrates compliance with the Commission's regulation for Fire Protection (10 CFR 50.48).

System Intended Functions

1. Provide reactor coolant pressure boundary. The Standby Liquid Control System contains and provides isolation from the reactor coolant pressure boundary. The Standby Liquid Control System enters the reactor vessel via the Core Spray System. 10 CFR 54.4(a)(1)

2. Introduce emergency negative reactivity to make the reactor subcritical. The Standby Liquid Control System injects sodium pentaborate solution as an alternate negative reactivity method for reactor shutdown when normal reactivity control provisions become inoperative. 10 CFR 54.4(a)(1)

3. Provide primary containment boundary. The Standby Liquid Control System injection piping contains valves, which are considered primary containment isolation devices. 10 CFR 54.4(a)(1)

4. Resist nonsafety-related SSC failure that could prevent satisfactory accomplishment of a safety-related function. The system contains nonsafety-related piping that has the potential to spatially and structurally interact with safety-related portions of this system. 10 CFR 54.4(a)(2)

5. Relied upon in the safety analyses or plant evaluations to perform a function that demonstrates compliance with the Commission's regulations for Environmental Qualification (10 CFR 50.49). The Standby Liquid Control System has components that are in the Environmental Qualification program. 10 CFR 54.4(a)(3)

6. Relied upon in safety analyses or plant evaluations to perform a function that demonstrates compliance with the Commission's regulations for Anticipated Transients without Scram (10 CFR 50.62). The Standby Liquid Control System injects sodium pentaborate solution as an

alternate negative reactivity method for reactor shutdown when normal reactivity control provisions become inoperative. 10 CFR 54.4(a)(3)

7. Relied upon in the safety analyses or plant evaluations to perform a function that demonstrates compliance with the Commission's regulations for Station Blackout (10 CFR 50.63). Standby Liquid Control System provides 24VDC power for instrumentation during shutdown coping and recovery. 10 CFR 54.4(a)(3)

UFSAR References

9.3.5

License Renewal Boundary Drawings

LR-M-41-1, Sheet 1
LR-M-48-1, Sheet 1

Table 2.3.3-30 Standby Liquid Control System
Components Subject to Aging Management Review

Component Type	Intended Function
Bolting	Mechanical Closure
Bolting (Class 1)	Mechanical Closure
Class 1 Piping, Fittings and Branch Connections < NPS 4"	Pressure Boundary
Electric Heater (Housing)	Pressure Boundary
Flow Element	Leakage Boundary
Piping and Fittings	Leakage Boundary
Piping and Fittings	Pressure Boundary
Pump Casing (SLC Injection)	Pressure Boundary
Tank (Standby Liquid Control)	Pressure Boundary
Tank (Test)	Leakage Boundary
Thermowell	Pressure Boundary
Valve Body	Leakage Boundary
Valve Body	Pressure Boundary
Valve Body (Class 1)	Pressure Boundary

The aging management review results for these components are provided in:

Table 3.3.2-30 Standby Liquid Control System
Summary of Aging Management Evaluation

2.3.3.31 Torus Water Cleanup System

System Purpose

The Torus Water Cleanup System is a mechanical system designed to maintain torus water purity, clarity, and level within specified limits. Torus Water Cleanup System has no function related to the safe shutdown of the plant. It can be operated during startup, shutdown, and refueling modes, as well as during power operation. The Torus Water Cleanup System is in scope for license renewal.

The purpose of the Torus Water Cleanup System is to maintain suppression pool water quality within its limits. The Torus Water Cleanup System accomplishes this purpose by processing torus water through the Fuel Pool Cooling and Cleanup System's filter demineralizer.

Portions of the Torus Water Cleanup System are considered primary containment pressure boundary. The Containment Isolation System, upon indications of high drywell pressure, low-low reactor water level or high-high reactor building ventilation radiation exhaust, provides automatic isolation signals for containment isolation valves in the Torus Water Cleanup System.

The Torus Water Cleanup System is manually initiated and operated intermittently, as necessary, to maintain suppression pool water quality within the its limits.

System Operation

The Torus Water Cleanup System is comprised of one suction header, two suction isolation valves, one centrifugal pump, its associated piping, local valves and instrumentation, and two discharge isolation valves. The System is manually initiated and operated intermittently, as necessary, to maintain suppression pool water quality. The pump is automatically stopped on low suction.

Following system initiation, the torus water cleanup pump takes suction from the torus through a strainer. Torus water flows from the suction header, through two (2) motor operated isolation valves prior to entering the torus water cleanup pump. Torus water is pumped to the Fuel Pool Cooling and Cleanup system filter demineralizer (evaluated with Fuel Pool Cooling and Cleanup System). The Torus Water Cleanup System discharge line continues at the point where the return piping from the Fuel Pool Cooling and Cleanup System filter demineralizer is attached to the Torus Water Cleanup System. The Torus Water Cleanup System flows through two (2) motor operated isolation valves and then returns back to the torus.

The Torus Water Cleanup System is also used for partially draining the torus. In this mode of operation, the torus water cleanup pump takes suction from the torus and circulates the water through a fuel pool filter demineralizer (evaluated with Fuel Pool Cooling and Cleanup System) and provides a flow path to the condensate storage tank (evaluated with Condensate Storage and Transfer System) for partial draining of the torus.

Portions of the Torus Water Cleanup System are considered primary containment pressure boundary. Indications of high drywell pressure, low-low reactor water level or high-high reactor building ventilation exhaust radiation provides automatic isolation signals for containment isolation valves in the Torus Water Cleanup System.

For more detailed information, see UFSAR section 9.1.3.

System Boundary

The boundary of the Torus Water Cleanup System begins with the suction strainer located in the torus and includes one suction header, two motor operated suction isolation valves, one centrifugal pump, its associated piping, local valves and instrumentation up to the attachment point for the Fuel Pool Cooling and Cleanup System. At this point the Torus Water Cleanup System piping is connected to the Fuel Pool Cooling and Cleanup System filter demineralizer (evaluated with Fuel Pool Cooling and Cleanup System). The Torus Water Cleanup System discharge line continues at the point where the return piping from the Fuel Pool Cooling and Cleanup System filter demineralizer is attached to the Torus Water Cleanup System. The Torus Water Cleanup System discharge piping includes the two (2) motor operated discharge isolation valves and terminates at the discharge line attachment point to the torus.

Also included in the license renewal scoping boundary of the Torus Water Cleanup System are those portions of nonsafety-related piping and equipment that extend beyond the safety-related/nonsafety-related interface up to the location of the first seismic anchor, or to a point no longer in proximity to equipment performing a safety-related function, whichever extends furthest. This includes the nonsafety-related portions of the system located within the Reactor and Auxiliary Buildings included in this boundary are pressure retaining components relied upon to preserve the leakage boundary intended function of this portion of the system. For more information, refer to the license renewal boundary drawing for identification of this boundary, shown in red.

All associated piping, components, and instrumentation contained within the flowpath described above are included in the Torus Water Cleanup System boundary.

Not included in the Torus Water Cleanup System license renewal scoping boundary is the following system, which is separately evaluated as license renewal system:

Fuel Pool Cooling and Cleanup System

Reason for Scope Determination

The Torus Water Cleanup System meets 10 CFR 54.4(a)(1) because it is a safety-related system that is relied upon to remain functional during and following design basis events. It does meet 10 CFR 54.4(a)(2) because failure of nonsafety-related portions of the system could prevent satisfactory accomplishment of function(s) identified for 10 CFR 54.4(a)(1). It also meets 10 CFR 54.4(a)(3) because it is relied upon in the safety analyses or plant evaluations to perform a function that demonstrates compliance with the Commission's regulations for Environmental Qualification (10 CFR 50.49). The Torus Water Cleanup System is not relied upon in any safety analyses or plant evaluations to perform a function that demonstrates compliance with the Commission's regulation for Fire Protection (10 CFR 50.48), Anticipated Transient Without Scram (10 CFR 50.62), and Station Blackout (10 CFR 50.63).

System Intended Functions

1. Provides primary containment boundary. The Torus Water Cleanup System suction and discharge piping contains valves, which are considered containment isolation devices. 10 CFR 54.4(a)(1)

2. Resist nonsafety-related SSC failure that could prevent satisfactory accomplishment of a safety-related function. The system contains nonsafety-related piping that has the potential to spatially and structurally interact with safety-related portions of this system. 10 CFR 54.4(a)(2)

3. Relied upon in the safety analyses or plant evaluations to perform a function that demonstrates compliance with the Commission's regulations for Environmental Qualification (10 CFR 50.49). The primary containment isolation valves within the Torus Water Cleanup System are environmentally qualified. 10 CFR 54.4(a)(3)

UFSAR References

9.1.3

License Renewal Boundary Drawings

LR-M-53-1, Sheet 2

Table 2.3.3-31 Torus Water Cleanup System
Components Subject to Aging Management Review

Component Type	Intended Function
Bolting	Mechanical Closure
Piping and Fittings	Leakage Boundary
Piping and Fittings	Pressure Boundary
Piping and Fittings	Structural Support
Pump Casing (Torus Water Clean-up)	Leakage Boundary
Strainer	Structural Support
Valve Body	Leakage Boundary
Valve Body	Pressure Boundary

The aging management review results for these components are provided in:

Table 3.3.2-31 Torus Water Cleanup System
Summary of Aging Management Evaluation

2.3.3.32 Traversing Incore Probe System

System Purpose

The Traversing In-Core Probe (TIP) System is an electrical instrumentation system designed to provide neutron flux data to be used for calibration of the Local Power Range Monitor (LPRM) detectors and to determine axial neutron flux levels for core power distribution measurements. The TIP system includes mechanical component types that are responsible for providing primary containment integrity.

The purpose of the TIP system is to measure core neutron flux at various positions throughout the core. The TIP system accomplishes its purpose by utilizing a set of fission chamber detector instruments identical to those used by the LPRM system and a positioning system capable of moving the fission chamber detectors to various locations in the core corresponding to the locations of the LPRM detectors. The moveable TIP detectors, as with the fixed LPRM detectors, generate signals that are processed to indicate neutron flux levels in the vicinity of each detector.

Since the TIP detectors are capable of being fully withdrawn from the core and outside of primary containment, the TIP system consists of mechanical components designed to assure primary containment integrity. The TIP system does not generate any signals for protection of the reactor; however, the portion responsible for providing primary containment integrity is in scope for license renewal. The TIP system is not credited with a reactor coolant pressure boundary integrity function since the in-vessel located dry tubes that provide the reactor coolant pressure boundary are evaluated with the Reactor Internals system. The majority of the TIP system is not in scope for license renewal.

System Operation

The Traversing Incore Probe System is comprised of two subsystems. One is the purge equipment subsystem and the other is drive mechanism subsystem. The TIP purge equipment subsystem is comprised of the nitrogen bottle station, TIP purge equipment, and purge air control unit. The purge equipment subsystem maintains a dry atmosphere within TIP system components to prevent rusting of the TIP detector cabling and to minimize the deterioration of the TIP guide tube lubricant. The nitrogen bottle station serves as the normal purge supply for the TIP indexing mechanisms. When the nitrogen bottle station is not available, the Compressed Air System can supply the required backup air to the indexing mechanisms.

The TIP drive mechanism subsystem is comprised of five trains, each consisting of a fission chamber detector identical to the LPRM fission chamber detectors, attached to a triaxial drive and signal cable which is helically wrapped in carbon steel. Each detector is driven by a drive mechanism consisting of a drive reel assembly capable of inserting and withdrawing the detector at either a low or high drive speed. A digital position indicator provides core top and bottom indication, and continuous digital indication of detector position. A chamber shield consisting of a cylindrical cask filled with lead shot is associated with each detector and drive mechanism. It houses and shields the detector when fully withdrawn from the drywell. TIP guide tubing provides a guide for the TIP detector throughout its travel from the chamber shield to the core top position inside the reactor vessel. The dry tubes inside the reactor vessel are evaluated with the Reactor Internals system. An indexing mechanism associated

with each detector allows the selection of any of ten locations for each detector, including a core location common to all five detectors for purposes of calibration. The TIP flux probe monitor consists of a dual channel amplifier and a power supply. The amplifier conditions the detector signal to provide an input to the plant computer for determining flux level. The power supply provides operating power to the flux amplifier and to the detector for biasing. The drive control unit provides control of detector insertion and retraction. It determines and displays detector position in the core, monitoring the TIP detector throughout its operation with status lights.

For each of the five drive mechanism trains, there are explosive-actuated shear valve and ball valve located outside the drywell. The ball valve is normally closed except when the detector is inserted. The ball valve can be manually controlled, but is normally opened and closed automatically, with interlocks to open the valve when the detector leaves the shield, and to deenergize the drive mechanism should the ball valve not open after the insert operation is selected for the TIP detector. Upon receipt of a containment isolation signal, an inserted TIP detector is fully retracted at the high travel speed and the ball valve automatically closes when the detector reaches the chamber shield. The shear explosive valve is used only to isolate a leak while a detector is inserted and power is lost to the drive mechanism or some other fault has occurred which prevents retraction of the TIP. A keylock switch manually activates the shear explosive valve. When actuated, a guillotine will cut the TIP guide tube and detector cable inside it and will seal the guide tube. The valve control monitor controls the valve interlocks and indicates position of the ball and shear explosive valves. The keylock operator for the explosive actuated shear valve is located and powered from the valve control monitor.

Similar to the TIP purge subsystem, the TIP drive mechanism also requires compressed gas to maintain a dry environment for the TIP detectors and cables. The Primary Containment Instrument Gas System serves as the normal supply for the compressed gas. When the Primary Containment Instrument Gas System is not available, the nitrogen bottle station can be aligned to supply the TIP drive mechanism. When neither Primary Containment Instrument Gas System nor the nitrogen bottle station is available, the Compressed Air System can supply the backup air to the drive mechanisms via a portion of the Primary Containment Instrument Gas System piping.

For more detailed information, see UFSAR Section 9.3.6.

System Boundary

The TIP system boundary begins at the branch piping connection from the Primary Containment Instrument Gas System. The TIP system has two separate branch piping connections that provide compressed gas supply to the drive mechanism and the purge equipment subsystems. For the branch piping connection to the drive mechanism subsystem, the piping continues through the TIP drive mechanism isolation valve, TIP drive mechanisms, chamber shields outside the primary containment where the detectors are stored when fully retracted, shear valve assemblies and to the containment penetrations (P34A-E & G). Inside the primary containment, the branch piping continues through the TIP guide tubes, inboard isolation valves, indexing mechanisms, from which multiple TIP guide tubes proceed to the reactor vessel and then ends at the core top position inside the vessel. Included are the five-way connector (which provides a pathway for each indexer to send a detector to the same location for calibration), triaxial drive and signal cables, detectors, and electronic equipment necessary to obtain and process the TIP signals. For the branch piping connection to the purge equipment subsystem, the branch piping continues through the normally closed TIP

purge equipment isolation valve. The system includes the normal compressed gas supply from the nitrogen bottle station, which connects the supply line of nitrogen bottle station right after the TIP purge equipment isolation valve. The branch piping continues through the TIP purge equipment, outboard isolation valve, and to the containment penetration (P34F). Inside the primary containment, the piping continues through the purge air control unit and ends at the indexing mechanisms. All associated safety-related piping, components and instrumentation contained within the flow paths described above are included in the system boundary.

Also included in the license renewal scoping boundary of the TIP system are those portions of nonsafety-related piping and equipment that extend beyond the safety-related/nonsafety-related interface up to the location of the first seismic anchor. Included in this boundary are components relied upon to preserve the structural support intended function of this portion of the system. For more information, refer to the license renewal boundary drawing for identification of this boundary, shown in red.

Not included in the system boundary of the Traversing Incore Probe System are the dry tubes inside the reactor vessel, which are included in the Reactor Internals scoping boundary. Also not included in the system boundary are the TIP guide tube containment penetrations (P34A-F), which are separately evaluated for license renewal scoping in the Primary Containment structure.

Not included in the Traversing Incore Probe System license renewal scoping boundary are the following interfacing systems, which are separately evaluated as a license renewal system:

Compressed Air System
Primary Containment Instrument Gas System
Reactor Internals

There are two portions of the TIP system boundary that are in scope for license renewal for the primary containment boundary intended function. These portions of the system are in the drive mechanism subsystem and the purge equipment subsystem. For the drive mechanism subsystem, it is comprised of the TIP guide tubing from the shear valve assembly on each of the five TIP system trains to the primary containment penetration. This boundary includes the ball valve associated with each train, which is downstream of the shear explosive valve. For the purge equipment subsystem, it is comprised of piping from outboard isolation valve to the inboard isolation check valve inside primary containment. All nonsafety-related portions except those relied upon to preserve the structural support intended function of the TIP system are not in scope for license renewal as they are not required to support the intended function of providing primary containment boundary.

Reason for Scope Determination

The Traversing Incore Probe System meets 10 CFR 54.4(a)(1) because it is a safety-related system that is relied upon to remain functional during and following design basis events. It meets 10 CFR 54.4(a)(2) because failure of nonsafety-related portions of the system could prevent satisfactory accomplishment of function(s) identified for 10 CFR 54.4(a)(1). It also meets 10 CFR 54.4(a)(3) because it is relied upon in the safety analyses or plant evaluations to perform a function that demonstrates compliance with the Commission's regulation for Environmental Qualification (10 CFR 50.49). The Traversing Incore Probe System is not relied upon in any safety analyses or plant evaluations to perform a function that demonstrates

compliance with the Commission's regulation for Fire Protection (10 CFR 50.48), Anticipated Transient Without Scram (10 CFR 50.62) or Station Blackout (10 CFR 50.63).

System Intended Functions

1. Provide primary containment boundary. Supply lines penetrating primary containment are provided with isolation valves. 10 CFR 54.4(a)(1)

2. Resist nonsafety-related SSC failure that could prevent satisfactory accomplishment of a safety related function. The safety-related/nonsafety-related interface has components relied upon to preserve the structural support intended function. 10 CFR 54.4(a)(2)

3. Relied upon in safety analyses or plant evaluations to perform a function that demonstrates compliance with the Commission's regulations for Environmental Qualification (10 CFR 50.49). The Traversing Incore Probe System has components that are in the Environmental Qualification Program. 10 CFR 54.4(a)(3)

UFSAR References

6.2.4
7.6.1
7.7.1.13
9.3.6

License Renewal Boundary Drawings

LR-M-59-1, Sheet 3

Table 2.3.3-32 Traversing Incore Probe System Components Subject to Aging Management Review

Component Type	Intended Function
Bolting	Mechanical Closure
Piping and Fittings	Pressure Boundary
Piping and Fittings	Structural Support
Valve Body	Pressure Boundary

The aging management review results for these components are provided in:

Table 3.3.2-32 Traversing Incore Probe System Summary of Aging Management Evaluation

2.3.4 STEAM AND POWER CONVERSION SYSTEMS

The following systems are addressed in this section:

- Condensate Storage and Transfer System (2.3.4.1)
- Feedwater System (2.3.4.2)
- Main Condenser System (2.3.4.3)
- Main Steam System (2.3.4.4)

2.3.4.1 Condensate Storage and Transfer System

System Purpose

Condensate Storage and Transfer System is a condensate storage, makeup and supply system designed to distribute water to the High Pressure Coolant Injection, Reactor Core Isolation Cooling, Core Spray, Control Rod Drive, Residual Heat Removal, Reactor Water Clean Up, Fuel Pool Cooling & Cleanup, Condensate, Feedwater, and Radwaste Systems for normal and testing operational modes. The system is normally filled by the Makeup Demineralizer System. The system operates continuously during plant power operation. The Condensate Storage and Transfer System has no safety-related function, except for that of supplying condensate to the suction line of the high pressure coolant injection and reactor core isolation cooling pumps. Large portions of the Condensate Storage and Transfer System are not required to perform intended functions and are not in scope.

The Condensate Storage and Transfer System consists of the condensate and refueling water storage tank plant systems. The Condensate Storage and Transfer System purpose is to provide for bulk storage of condensate, surge volume capability for the Condensate System, condensate supply for the condensate demineralizer resin transfer, flushing, seal water, resin regeneration, and makeup to the Fuel Pool Cooling & Cleanup System. The Condensate Storage and Transfer System also supplies condensate to the suctions of the high pressure coolant injection, reactor core isolation cooling, core spray, and control rod drive pumps. The system also supplies condensate to various plant systems and makeup supply for various plant systems. Condensate Storage and Transfer System accomplishes this purpose by continuously delivering pressurized condensate from the condensate transfer, condensate transfer jockey, or the refueling water pumps to individual plant systems. It also provides a flow path between plant water supplies and various equipment when the appropriate manual or remote manual line-ups are made. System demand control is achieved through both local and remote manual manipulation of the Condensate Storage and Transfer System components.

System Operation

The Condensate Storage and Transfer System is a normally operating condensate delivery system comprised of the condensate storage tank, condensate transfer pumps, condensate transfer jockey pumps, refueling transfer pumps, condensate supply header, expansion tank, and condensate branch lines that provide flow to various plant systems and components. It also is used to deliver water through its piping system to support various plant functions and it provides a surge volume for the Condensate System.

The Condensate Storage and Transfer System is relied on to provide a flow path from the condensate storage tank to the suction of the high pressure coolant injection and reactor core isolation cooling pumps. The function of this line is to ensure that the High Pressure Coolant Injection and Reactor Core Isolation Cooling Systems have adequate suction water to perform the transfer from the condensate storage tank to the torus.

The Condensate Storage and Transfer System consists of three basic flow paths. The first is the condensate storage tank to the high pressure coolant injection and reactor core isolation cooling pump suction lines. The second is the condensate transfer, condensate transfer jockey and refueling water pumps supply, and third is for main condenser makeup and reject.

The condensate storage tank to high pressure coolant injection and reactor core isolation cooling pump suction lines provide High Pressure Coolant Injection and Reactor Core Isolation Cooling Systems with condensate directly from the condensate storage tank. This same suction line supplies the Core Spray System pumps. There is also a flow path from the high pressure coolant injection and reactor core isolation cooling pump discharge lines that returns condensate to the condensate storage tank. This same return line also provides a flow path from the control rod drive water pumps discharge line to the condensate storage tank.

The condensate transfer, condensate transfer jockey and refueling water pumps take suction from a common header supplied by the condensate storage tank through the tank isolation valve. The water flows from the common suction header into the individual pump suction lines and on to the pumps. The pumps then discharge to a common discharge header. Normally one condensate transfer jockey pump operates continuously to supply system demands and the other pumps are placed on standby. A recirculation line from the discharge of each pump directs a portion of the pumps discharge back to the condensate storage tank. Recirculation flow is necessary during periods of low system demand to ensure that pump minimum flow requirements are met. Condensate from the combined pump discharge header flows from the Turbine Building to the Auxiliary and Reactor Buildings. Building branch lines from these headers supply systems and components with the required water. The Condensate Storage and Transfer System also provides condensate to the reactor well, dryer/separator pool, cask pool and returns the water to the condensate storage tank as necessary.

The Condensate Storage and Transfer System main condenser makeup and reject line directly connects to the main condenser and condensate storage tank, which provides bulk storage and supply of condensate to maintain the desired hotwell level. Water for filling the condensate storage tank is supplied from the Demineralized Water System.

Condensate Storage and Transfer System has a seismically qualified dike that surrounds the condensate storage tank. The system's valves and piping sections that penetrate the dike are seismically qualified.

The condensate transfer, condensate transfer jockey and refueling water pumps are controlled by individual pump control switches on a control room panel. Normally both condensate transfer pumps are in standby with a jockey pump maintaining system pressure and supplying system loads. In the event that system load exceeds the capacity of the jockey pumps, the condensate transfer pumps will start and provide additional flow. The refueling water pumps are normally aligned to supply Condensate Storage and Transfer System loads. In the event condensate transfer pumps cannot maintain system demand the refueling water pumps are used. By operating manual valves the refueling water pumps can pump from the condensate storage tank to the reactor well, dryer/separator pool, and the spent fuel pool or from the reactor well, dryer/separator pool, and the spent fuel pool to the condensate storage tank. The refueling water pumps can be operated from a remote panel. The condensate storage tank is vented to the atmosphere. Tank level is indicated remotely on a control room panel and locally at the tank. The condensate storage tank's steam heating coils (evaluated with Auxiliary Steam System) receive steam from the Auxiliary Steam System to maintain water temperature and prevent freezing. The Condensate Storage and Transfer System lines from the condensate storage tank to where the pipe goes underground are provided with electrical heat tracing and thermal insulation to prevent freezing.

For more detailed information, see UFSAR sections 9.2.6.

System Boundary

The Condensate Storage and Transfer System boundary begins at the condensate storage tank and continues down the common suction header to the condensate transfer, condensate transfer jockey and refueling water pumps suction lines and on through the pumps to the common discharge header. Each pump's recirculation line is included. The system continues through the main header in the Turbine Building and runs into the Auxiliary Building header. Auxiliary Building header splits and runs into the Reactor Building header.

The Reactor Building header includes the piping up to the connection point with High Pressure Coolant Injection, Reactor Core Isolation Cooling, Core Spray, Residual Heat Removal, Reactor Water Clean Up, and Fuel Pool Cooling & Cleanup (including the reactor well, dryer/separator pool, cast pool and refuel services boxes) Systems. The Auxiliary Building header begins at the entry point to the building and terminates at the connection points to the Radwaste System loads, fuel pool filter demineralizer, and the individual hose stations throughout the Auxiliary Building. The Turbine Building Header boundary includes the piping up to the connection point to the Condensate, Feedwater, and Process and Post-Accident Sampling Systems.

The boundary of the condensate storage tank to the high pressure coolant injection and reactor core isolation cooling pump suction lines begins at the condensate storage tank, and continues through to the attachment point at the High Pressure Coolant Injection and Reactor Core Isolation Cooling Systems. Also included in this boundary are the lines from the high pressure coolant injection and reactor core isolation cooling pump discharge that return condensate to the condensate storage tank. The boundary includes the line that provides suction to the core spray pumps. The boundary also includes the control rod drive pump minimum flow line attachment point to this return line.

The Condensate Storage and Transfer System main condenser makeup and reject boundary begins at the condensate storage tank and terminates at the connection point to the Condensate and Control Rod Drive Systems.

All associated piping, components, and instrumentation contained within the flow path described above are included in the Condensate Storage and Transfer System boundary.

Also included in the license renewal scoping boundary of the Condensate Storage and Transfer System are those portions of nonsafety-related piping and equipment that extend beyond the safety-related/nonsafety-related interface up to the location of the first seismic anchor, or to a point no longer in proximity to equipment performing a safety-related function, whichever extends furthest. This includes the nonsafety-related portions of the system located within the Reactor Building. Included in this boundary are pressure-retaining components relied upon to preserve the leakage boundary intended function of this portion of the system. For more information, refer to the license renewal boundary drawing for identification of this boundary, shown in red.

Not included in the Condensate Storage and Transfer System license renewal boundary are the following interfacing systems, which are separately evaluated as license renewal systems:

Auxiliary Steam System
Condensate System

Control Rod Drive System
Core Spray System
Demineralized Water System
Feedwater System
Fuel Pool Cooling & Cleanup System
High Pressure Coolant Injection System
Main Condenser System
Process and Post-Accident Sampling System
Radwaste System
Reactor Core Isolation Cooling System
Reactor Water Clean Up System
Residual Heat Removal System

Not included in the scope of license renewal is the portion of the Condensate Storage and Transfer System located within the Turbine Building and the Auxiliary Building Service Radwaste Area as these portions of the system are not located within an area in proximity of components performing a safety-related function. Components that are not required to support the system's leakage boundary intended functions or any other intended function are not included in the scope of license renewal. The Condensate Storage and Transfer System supplies and accepts return condensate from systems and equipment in these areas. These portions of the system are not safety-related, are not required to support an intended function, and are not included in the scope of license renewal.

The overflow and demineralized water makeup piping from the connection to the condensate storage tank is not required to support intended functions and is not included in the scope of license renewal.

Reason for Scope Determination

The Condensate Storage and Transfer System meets the scoping requirements of 10 CFR 54.4(a)(1) because it is a safety-related system which is relied upon to remain functional during and following design basis events. It meets 10 CFR 54.4(a)(2) because failure of nonsafety-related portions of the system could prevent satisfactory accomplishment of function(s) identified for 10 CFR 54.4(a)(1). It does meet 10 CFR 54.4(a)(3) because it is relied upon in the safety analyses or plant evaluations to perform a function that demonstrates compliance with the Commission's regulations for Fire Protection (10 CFR 50.48), Environmental Qualification (10 CFR 50.49), and Station Blackout (10 CFR 50.63). The Condensate Storage and Transfer System is not relied upon in any safety analyses or plant evaluations to perform a function that demonstrates compliance with the Commission's regulation for Anticipated Transient Without Scram (10 CFR 50.62).

System Intended Functions

1. Provide emergency core cooling where the equipment provides coolant directly to the core. The Condensate Storage and Transfer System provides suction condensate to the High Pressure Coolant Injection System. 10 CFR 54.4(a)(1)

2. Remove residual heat from the Reactor Coolant System. The Condensate Storage and Transfer System provides suction to the Reactor Core Isolation Cooling System. 10 CFR 54.4(a)(1)

3. Resist nonsafety-related SSC failure that could prevent satisfactory accomplishment of a safety-related function. The Condensate Storage and Transfer System includes nonsafety-related water filled lines in the Reactor Building that have the potential to spatially (spray or leakage) and structurally interact (spray or leakage) with safety-related SSCs. 10 CFR 54.4(a)(2)

4. Relied upon in safety analyses or plant evaluations to perform a function that demonstrates compliance with the Commission's regulations for Station Blackout (10 CFR 50.63). Condensate Storage and Transfer System provides water source for High Pressure Coolant Injection System and Reactor Core Isolation Cooling System to control reactor vessel pressure and level. This function supports Station Blackout coping, shutdown and restoration. 10 CFR 54.4(a)(3)

5. Relied upon in safety analyses or plant evaluations to perform a function that demonstrates compliance with the Commission's regulations for Fire Protection (10 CFR 50.48). The condensate storage tank is part of Appendix R shut down method. Condensate storage tank is the preferred source of makeup water to the reactor vessel and will be used if available. 10 CFR 54.4(a)(3)

6. Relied upon in safety analyses or plant evaluations to perform a function that demonstrates compliance with the Commission's regulations for Environmental Qualification (10 CFR 50.49). The Condensate Storage and Transfer System has components that are in the EQ program. 10 CFR 54.4(a)(3)

UFSAR References

9.2.6

License Renewal Boundary Drawings

LR-M-08-0, Sheet 1
LR-M-08-0, Sheet 2
LR-M-44-1, Sheet 1
LR-M-45-1, Sheet 1
LR-M-49-1, Sheet 1
LR-M-51-1, Sheet 1
LR-M-51-1, Sheet 2
LR-M-52-1, Sheet 1
LR-M-53-1, Sheet 1
LR-M-53-1, Sheet 2
LR-M-55-1, Sheet 1
LR-M-66-0, Sheet 1

Table 2.3.4-1 Condensate Storage and Transfer System Components Subject to Aging Management Review

Component Type	Intended Function
Bird Screen	Filter
Bolting	Mechanical Closure
Expansion Joints	Structural Support
Piping and Fittings	Leakage Boundary
Piping and Fittings	Pressure Boundary
Piping and Fittings	Structural Support
Piping and Fittings (Pipe Sleeve)	Shelter, Protection
Tanks (CST)	Pressure Boundary
Thermowell	Pressure Boundary
Valve Body	Leakage Boundary
Valve Body	Pressure Boundary

The aging management review results for these components are provided in:

Table 3.4.2-1 Condensate Storage and Transfer System Summary of Aging Management Evaluation

2.3.4.2 Feedwater System

System Purpose

The Feedwater System is a normally operating system designed to provide preheated feedwater to the reactor pressure vessel. It provides water to the reactor at a flow rate equivalent to what is being generated into steam by boil-off and removed by the Main Steam System. The Feedwater System is essential for power operations. The portion of the system from the feedwater pump suction isolation valve to, but not including, the outboard primary containment isolation check valve, are nonsafety-related. The portion of the Feedwater System from the outboard primary containment isolation check valve to the Reactor Pressure Vessel is safety-related. The Feedwater System is in scope for license renewal, however, large portions of the Feedwater System are not required to perform intended functions and are not in scope. The Feedwater System consists of the following plant systems: feedwater system, reactor feed pump turbine system, and the feed pump turbine lube oil system.

The purpose of the Feedwater System is to provide preheated feedwater to the reactor pressure vessel during normal operation. Feedwater System accomplishes this purpose by delivering high-pressure feedwater to the reactor vessel. The Feedwater System automatically maintains the desired reactor pressure vessel water level for all normal reactor-operating conditions.

The Feedwater System provides cooling water to the reactor core during a loss of coolant accident but is not credited in the accident analyses and is not considered part of the emergency core cooling system or credited to support safe shutdown.

System Operation

The Feedwater System is comprised of three one-third capacity steam turbine-driven feedwater pumps arranged in a parallel array, three strings of high-pressure feedwater heaters, and the necessary valves, piping, instrumentation and controls required to deliver sufficient feedwater flow to the Reactor Pressure Vessel during all modes of operation. When operating at 100% of rated reactor power, all three reactor feedwater pumps are normally in-service.

The feedwater pumps take suction on a common header downstream of the Condensate System's low-pressure feedwater heaters. The normal feedwater flowpath for each string is through the steam turbine-driven feedwater pumps, discharge check valve, heater string flow element and continues to a common header. Flow then goes through the high-pressure heater tubes and into another common discharge header. The flow then splits into two main headers each with a flow element, an outboard air operated isolation check valve, one inboard isolation check valve, and an inboard motor operated isolation valve. Finally feedwater flow is delivered to the reactor vessel (evaluated with the Reactor Pressure Vessel) through six feedwater nozzles. The shell side of the high-pressure heaters receive main turbine extraction steam to preheat the feedwater (evaluated with the Main Turbine and Auxiliary System) prior to delivery to the reactor pressure vessel. The Feedwater System has steam driven reactor feed pump turbines that utilize steam from the Main Steam System. The Feedwater System (reactor feedwater pump turbine lube oil) provides lubrication to the reactor feed pumps and turbines.

The Feedwater System (digital feedwater control) controls the flow of feedwater into the reactor vessel to maintain the vessel water level within predetermined limits during all normal plant operating modes. The Feedwater System uses vessel water level, steam flow, and feedwater flow as a three-element control to automatically regulate feedwater flow to maintain a normal level control range. A change in level or steam flow will cause a change (mismatch) in feed flow and the reactor feedwater pump turbines will respond accordingly to correct the mismatch.

Each reactor feedwater pump has a minimum flow line, for pump protection, routed from the discharge of the reactor feed pump to each condenser shell. The three high-pressure heaters have a common bypass line used during plant start-up. The Feedwater System startup recirculation line is used to flush the system and improve water chemistry.

For more detailed information, see UFSAR section 10.4.7.

System Boundary

The Feedwater System boundary begins at the feedwater pumps suction isolation valves and ends at the feedwater attachment point to the Reactor Pressure Vessel nozzles (evaluated with the Reactor Pressure Vessel System). The system includes three strings, each of which include a feedwater pump, flow element, common pump discharge header, and the tube side of the high-pressure heaters. The three strings combine into a common header downstream of the high-pressure heaters. The common header then splits into two main headers that each includes a feedwater system flow element, an outboard air operated isolation check valve, inboard isolation check valve, and an inboard motor operated isolation valve. Six lines attach to the reactor pressure vessel. Not included in the scoping boundary of the Feedwater System are the discharge spray spargers, which are evaluated with the Reactor Internals.

Each feedwater pump has a minimum flow line routed from the discharge of the reactor feed pump to each condenser shell. The three high-pressure heaters have a common bypass line used during plant start-up. The boundary includes the line that goes to the Condensate System (zinc injection system) from the common pump discharge header. Also included in the system boundary is the startup recirculation line used to improve water chemistry, which returns to the main condenser.

The Feedwater System boundary includes the reactor feed pump turbine steam system that begins at the attachment point to the Main Steam System. High-pressure steam is supplied from the main steam bypass line and low-pressure steam from the outlet of the main turbine moisture separators. The steam flows through their respective stop and control valves, mix in the steam chest, and enters the reactor feedwater pump turbines where it is condensed and drained to the main condensers. The main condensers are evaluated with the Main Condenser System.

The Feedwater System includes the closed loop reactor feed pump turbine lube oil system for each feedwater pump. Each loop includes a lube oil console, which includes an oil tank, pumps valves, lube oil cooler and filter. The lube oil is delivered to the reactor feed pump and turbine where the oil cascades back to the oil reservoir. The reactor feed pump turbine lube oil system includes the oil centrifuge that takes suction from each pump's oil reservoir to remove impurities and returns the clean oil back to its respective oil reservoir.

Included in the license renewal scoping boundary of the Feedwater System are those portions

of nonsafety-related piping and equipment that extend beyond the safety-related/nonsafety-related interface up to the location of the first seismic anchor, or to a point no longer in proximity to equipment performing a safety-related function, whichever extends furthest. This includes the nonsafety-related portions of the system located within the Reactor and Auxiliary Buildings, which provide leakage boundary intended functions, and a portion of piping extending into the Turbine Building, which provide a structural support intended function. For more information, refer to the license renewal boundary drawing for identification of this boundary, shown in red.

All associated piping, components, and instrumentation contained within the flow path described above are included in the Feedwater System boundary.

Not included in the Feedwater System license renewal boundary are the following interfacing systems, which are separately evaluated as license renewal systems:

Auxiliary Steam System
Closed Cycle Cooling Water System
Compressed Air System
Condensate System
High Pressure Coolant Injection System
Main Condenser System
Main Steam System
Main Turbine and Auxiliary System
Primary Containment
Process and Post Accident Sampling System
Reactor Core Isolation Cooling System
Reactor Internals
Reactor Pressure Vessel
Reactor Water Cleanup System

Not included in the scope of license renewal is the portion of the Feedwater System including the reactor feed pumps turbine subsystem, reactor feed pump turbine lube oil subsystem and other portions of the Feedwater System that are located within the Turbine Building that are not required for structural support. These portions of the system are not located within an area in proximity of components performing a safety-related function. Components and sub-systems that are not required to support the system's leakage boundary intended functions or any other intended function are not included in the scope of license renewal.

There are some portions of the Feedwater System boundary that are in scope for license renewal for primary containment and reactor coolant pressure boundary intended functions. This portion of the Feedwater System is from the outboard primary containment isolation check valve to the Reactor Pressure Vessel. Two feedwater lines penetrate the primary containment. Primary containment isolation in each line is provided by a motor operated stop check valve and an air assisted check valve outside the containment, and a check valve and a motor operated gate valve inside the containment. The piping and safety-related valves associated with containment isolation and reactor coolant pressure boundary will be in the scope of the Feedwater license renewal system.

Reason for Scope Determination

The Feedwater System meets the scoping requirements of 10 CFR 54.4(a)(1) because it is a safety-related system which is relied upon to remain functional during and following design basis events. It meets 10 CFR 54.4(a)(2) because failure of nonsafety-related portions of the system could prevent satisfactory accomplishment of function(s) identified for 10 CFR 54.4(a)(1). It does meet 10 CFR 54.4(a)(3) because it is relied upon in the safety analyses or plant evaluations to perform a function that demonstrates compliance with the Commission's regulations for Fire Protection (10 CFR 50.48), Environmental Qualification (10 CFR 50.49), Station Blackout (10 CFR 50.63) and Anticipated Transient Without Scram (10 CFR 50.62).

System Intended Functions

1. Provide primary containment boundary. The Feedwater System piping contains valves, which are considered containment isolation devices. 10 CFR 54.4 (a)(1)

2. Provide reactor coolant pressure boundary. The Feedwater System provides isolation from the reactor coolant pressure boundary. 10 CFR 54.4 (a)(1)

3. Resist nonsafety-related SSC failure that could prevent satisfactory accomplishment of a safety-related function. The Feedwater System includes nonsafety-related water filled lines in the Reactor and Auxiliary Buildings that have the potential for spatial interactions (spray or leakage) with safety-related SSCs, and portions of piping in the Turbine Building that is relied upon for structural support. 10 CFR 54.4(a)(2)

4. Relied upon in safety analyses or plant evaluations to perform a function that demonstrates compliance with the Commission's regulations for Fire Protection (10 CFR 50.48). Feedwater System has components, and isolation valves inside primary containment, which are part of the Appendix R shut down component list. 10 CFR 54.4 (a)(3)

5. Relied upon in safety analyses or plant evaluations to perform a function that demonstrates compliance with the Commission's regulations for Environmental Qualification (10 CFR 50.49). Feedwater System has components that are in the Environmental Qualification program. 10 CFR 54.4 (a)(3)

6. Relied upon in safety analyses or plant evaluations to perform a function that demonstrates compliance with the Commission's regulations for Anticipated Transients Without Scram (10 CFR 50.62). The Feedwater System upon the receipt of a high pressure signal from the Redundant Reactivity Control System, including confirmation of no scram, limits the feedwater flow injection to the Reactor Pressure Vessel (feedwater pump runback). 10 CFR 54.4(a)(3)

7. Relied upon in safety analyses or plant evaluations to perform a function that demonstrates compliance with the Commission's regulations for Station Blackout (10 CFR 50.63). Feedwater System lines are used to inject High Pressure Coolant Injection and Reactor Core Isolation Cooling flow to the Reactor Pressure Vessel during coping, shutdown and restoration. 10 CFR 54.4 (a)(3)

UFSAR References

10.4.7

License Renewal Boundary Drawings

LR-M-41-1, Sheet 1
LR-M-44-1, Sheet 1
LR-M-49-1, Sheet 1
LR-M-55-1, Sheet 1

Table 2.3.4-2 Feedwater System
Components Subject to Aging Management Review

Component Type	Intended Function
Bolting	Mechanical Closure
Bolting (Class 1)	Mechanical Closure
Class 1 Piping, Fittings and Branch Connections < NPS 4"	Pressure Boundary
Flow Element	Structural Support
Piping and Fittings	Leakage Boundary
Piping and Fittings	Pressure Boundary
Piping and Fittings	Structural Support
Piping and Fittings (Class 1)	Pressure Boundary
Valve Body	Leakage Boundary
Valve Body	Pressure Boundary
Valve Body (Class 1)	Pressure Boundary

The aging management review results for these components are provided in:

Table 3.4.2-2 Feedwater System
Summary of Aging Management Evaluation

2.3.4.3 Main Condenser System

System Purpose

The Main Condenser System is a license renewal system that consists mainly of the main condenser. The Main Condenser System is a heat sink for the turbine exhaust steam, turbine bypass steam, and other flows. It also deaerates and stores the condensate for reuse after a period of radioactive decay. Additionally, the Main Condenser system provides for post accident containment and holdup of activity products.

The Main Condenser is designed:

a. To accept a portion of turbine bypass steam flow without exceeding the turbine exhaust pressure and temperature limitations.

b. To receive, in addition to the main turbine exhaust, vents and drains from the regenerative feedwater heating system and from various other components and systems of the heat cycle.

c. To provide time for radioactive isotope decay by retaining sufficient water in the hotwell, without makeup and with turbine throttle valves wide open.

The purpose of the Main Condenser System is to condense and deaerate low pressure turbine exhaust from each of the low pressure turbines, reactor feed pumps turbine exhaust steam, main turbine bypass steam and other steam influents. It also provides a retention time to allow for the decay of short-lived radionuclides. The main condenser accomplishes this by transferring heat to the circulating water system and by ensuring sufficient retention time in the hotwell to allow for the decay of short lived isotopes.

System Operation

The Main Condenser license renewal system is comprised of three single pass shells, with divided waterboxes, one each for the three low pressure sections of the main turbine. Each shell is rigidly supported on a concrete foundation and is connected to the corresponding low pressure turbine cylinder casing by means of an expansion joint.

Equalizing connections between condenser shells limit the pressure differential between adjacent shells. These connections also allow use of one single vacuum breaker for all three shells.

During normal operation, steam, after expanding through the low pressure turbine, exhausts directly downward, through exhaust openings in the turbine casings into the condenser shells. The steam passes over the outside of the tubes and forms condensate that enters the hotwell and flows to the suction of the condensate pumps. The inside of the tubes have water from the Circulating Water System passing through them for heat rejection. The Circulating Water System has divided water boxes, each provided with inlet and outlet circulating water valves, permitting individual operation, removal from service of one half shell for maintenance, or backwashing of either half shell. The steam packing exhauster and the steam jet air ejectors are provided to obtain the minimum vacuum that will prevent steam from leaking past the packing and into the Turbine Building.

During abnormal conditions, the Main Condenser System receives, although not simultaneously, flows from the Main Steam System, feedwater heater drains, reactor feed pump turbines exhaust, and relief valve discharges from various steam lines. There are also other intermittent flows into the Main Condenser System, such as condensate and reactor feedwater pumps minimum recirculation flows.

Makeup from the condensate storage tank is evenly divided between the operating elevation of the drain coolers. At each condenser, a line supplies make-up to a spray nozzle at the elevation of the drain coolers. Makeup thus enters the steam space to ensure deaeration before it mixes with condensate in the hotwell.

The condenser shells and turbine casings are protected by relief diaphragms, which will open in the event of failure of a turbine bypass valve to close on loss of condenser vacuum. The steam released from a ruptured diaphragm is discharged to the local area and then to the turbine building stack through the ventilating system.

Hotwell level is monitored and alarms are provided for both low and high level. Local temperature indication is also provided. Condenser vacuum is indicated in the control room. Vacuum pressure monitors provide alarm and trip signals to the main turbine and for the turbine bypass valves for loss of vacuum.

There are generally two types of valve trip events, which can occur at Hope Creek. The first trip will close the main stop valves, reheat stop valves, main control valves, intercept valves, and extraction check valves and opens the bypass valves to provide a flow path of reactor steam through the bypass valve assembly to the Main Condenser System. The second type of valve trip will close the bypass valves on low condenser vacuum, thereby protecting against an over pressurization of the main condenser. Bypass trip oil is used to actuate the bypass valve trip, independent of the turbine trip oil, via the bypass valve relay.

Air can be removed from the Main Condenser System by a mechanical vacuum pump (evaluated with the Main Condenser Air Extraction System), which discharges to the plant south vent. This pump is used for evacuating the condenser during plant startup and for purging the condenser after plant shutdown.

Hope Creek utilizes an alternate source term for design basis radiological consequence analyses under the 10 CFR 50.67 for accidents. The Main Condenser System is credited for radiological holdup for a control rod drop accident.

For more detailed information, See UFSAR section 10.4.1 and 15.4.9.

System Boundary

The boundary of the Main Condenser System begins at the low-pressure turbine exhaust inlets and ends at the condenser hotwell. The boundary includes the main condenser shell, condenser tubes and tubesheets.

Not included in the Main Condenser System are the following interfacing systems, which are separately evaluated as license renewal systems:

Feedwater System
Condensate Storage and Transfer System
Main Steam System

Reason for Scope Determination

The Main Condenser license renewal system does not meet 10 CFR 54.4(a)(1) because it is a nonsafety-related system and is not relied upon to remain functional during or following a design basis event. The Main Condenser System meets the scoping requirements of 10 CFR 54.4(a)(2) because it is relied on for post accident holdup. It does not meet 10 CFR 54.4(a)(3) since it is not relied upon in the safety analyses and plant evaluations to perform a function that demonstrates compliance with the Commission's regulations for Fire Protection (10 CFR 50.48), Environmental Qualification (10 CFR 50.49), ATWS (10 CFR 50.62), or Station Blackout (10 CFR 50.63).

System Intended Functions

1. Provide post accident containment and holdup of activity products. The Main Condenser System provides for post accident holdup. 10 CFR 54.4(a)(2)

UFSAR References

10.4.1.1
15.4.9

License Renewal Boundary Drawings

LR-M-01-1, Sheet 1

Table 2.3.4-3 Main Condenser System
Components Subject to Aging Management Review

Component Type	Intended Function
Main Condenser Shell	Holdup
Main Condenser Tubes	Holdup
Main Condenser Tubesheet	Holdup

The aging management review results for these components are provided in:

Table 3.4.2-3 Main Condenser System
Summary of Aging Management Evaluation

2.3.4.4 Main Steam System

System Purpose

The Main Steam System is a normally pressurized system designed to deliver steam from the reactor to the Main Turbine and Auxiliary System. The system consists of large and small bore piping, pneumatically actuated isolation valves, automatic or manually operated relief valves, and vacuum breaking check valves. The Main Steam System is in scope for license renewal.

The purpose of the Main Steam System is to provide a primary containment and reactor coolant pressure boundary function, serve as a pressure relief system, and serve as a steam distribution system. It accomplishes the primary containment and reactor coolant pressure boundary function by utilizing piping and valves to limit reactor coolant inventory or radioactivity release to within acceptable limits. It accomplishes the pressure relief function for the reactor coolant pressure boundary by way of automatic or manual actuation of safety relief valves (SRVs). It also provides automatic or manual reactor depressurization to support low pressure emergency core cooling system operation. Distribution of steam to the Main Turbine and Auxiliary Systems is accomplished by piping distribution branches in the Turbine Building.

System Operation

The system is comprised of large and small bore piping, pneumatically actuated isolation valves, automatic or manually operated relief valves, and vacuum breaking check valves to accomplish its designed functions. The Main Steam System transports steam generated by the reactor through the reactor pressure vessel nozzle to the main turbine through the main steam isolation valves (MSIVs) in each of the four main steam lines. Four main steam lines, each attached to a reactor vessel nozzle, have branch connections for either three or four safety relief valves. Integral with the piping in the primary containment are flow restrictors inside the piping along with sensing lines to monitor differential pressure. Two isolation valves on each line, one inside and one outside of primary containment, provide primary containment and reactor coolant boundary requirements. Additionally, the A and C lines have branch connections upstream of the inboard main steam isolation valves for Reactor Core Isolation Cooling System and High Pressure Coolant Injection System, respectively. Distribution of steam to the Main Turbine and Auxiliary System is accomplished through branch connections downstream of an equalizing header located in the Turbine Building.

The Main Steam System provides the pressure relief function with the fourteen safety relief valves installed on the main steam lines on the branch connections. When actuated, the safety relief valves discharge steam below the water line in the pressure suppression chamber (evaluated with the Primary Containment Structure) via quenchers. The safety relief valves are spring type safety valves sized and provided with setpoints that maintain reactor vessel pressures within design conditions.

Five of the safety relief valves are designated as Automatic Depressurization System valves. They are automatically actuated by the automatic depressurization logic (evaluated with the Automatic Depressurization System) or manually actuated, depressurizing the reactor vessel to support low pressure emergency core cooling systems in an emergency depressurization function. The Automatic Depressurization System is evaluated separately.

Integral with the main steam line piping are flow restrictors on each steam line inside the drywell. The main steam line flow nozzles provide a differential pressure which is sensed through small diameter piping leading to flow instrumentation, which provide indication and alarm for main steam line flow rate during normal and transient conditions. Actuation of safety signals on high flow is provided to the Containment Isolation System. The flow restrictors limit the maximum possible flow through the steam lines and in conjunction with the MSIVs limit the radiological release outside of the drywell and loss of reactor coolant during a postulated severance of the main steam line outside the containment prior to MSIV closure.

The main steam isolation valves are pneumatic piston actuated valves utilizing instrument air which is evaluated with the Compressed Air System, and Primary Containment Instrument Gas to assist closing the valves when required. The valves are provided automatic isolation signals to close from the Containment Isolation System and manual actuation from the control room. Solenoid valves powered from the Reactor Protection System operate the valves. The main steam isolation valves have position sensing switches as part of the Reactor Protection System to provide a reactor scram on sensed start of closure.

Sensing lines for the main steam low pressure sensors are downstream of the main steam isolation valves to sense a main steam line break and provide a signal for closure of the main steam isolation valves.

The turbine bypass valves provide a reactor pressure control function, turbine steam seals minimize air in leakage to the main condenser, the steam jet air ejector steam supply provides motive force for the air extraction function, the reactor feed pump supply provides motive force for the feed pump turbines, and the recombiner supply provides a preheat function.

Under post accident conditions the piping and components associated with the main flow path between the outboard main steam isolation valves and the turbine stop valves provides containment, holdup and plate out for main steam isolation valve leakage.

Draining of the main steam lines is accomplished by the drain lines routed to either the main condenser, which is evaluated with the Main Condenser System, or the Equipment and Floor Drainage System.

Piping is installed on the reactor vessel head and connected to the main steam lines to provide venting of non-condensable gases from the reactor vessel during normal operation. Another branch connection off the reactor head vent line provides steam to the wide range level indicator condensing chamber within the Nuclear Boiler Instrumentation System. Another branch connection with solenoid operated isolation valves provides a vent path from the reactor vessel to the Equipment and Floor Drainage System.

For more information see UFSAR Sections, 5.2, 5.4, 6.2 and 10.3.

System Boundary

The Main Steam System boundary begins with the four main steam line attachment points to the reactor vessel outlet nozzles, continues through the drywell and drywell penetrations into the turbine building, continues through the main turbine stop and control valves and ends at the connection to the main turbine casing. The reactor vessel outlet nozzles are evaluated for license renewal scoping with the Reactor Pressure Vessel. Each main steam line is equipped with safety relief valves and flow restrictor, followed by a main steam isolation valve inside and

outside the primary containment. The boundary includes piping between the reactor pressure vessel and the outboard isolation valve, including the main steam line drain piping. Also included in the Main Steam System boundary is the discharge piping from the safety relief valves, which is routed through the drywell, the pressure suppression chamber (Torus) vent header, and ends at the quencher located in the pressure suppression chamber (Torus). Included in the Main Steam System boundary is the reactor head vent piping beginning at the head vent nozzle pipe-to-nozzle weld and ending at the main steam piping, the head vent piping to the reactor level instrumentation condensing chamber for the wide range level instrument in the Nuclear Boiler Instrumentation System, and the head vent piping to the Equipment and Floor Drainage System. The reactor head vent nozzle is evaluated for license renewal scoping with the Reactor Pressure Vessel. Included in the Main Steam System boundary is the reactor head seal leak detection piping. All associated piping, components, and instrumentation contained within the flow path described above are included in the system evaluation boundary. Included in the license renewal scoping boundary of the Main Steam System are the piping branch connections that start between the outboard main steam isolation valves and the main steam stop valves and end at the main steam line low pressure sensors. Also included is the main steam lead and startup drain piping that starts at a branch connection upstream of the main stop valves and ends at the main condenser.

The Main Steam System supports the containment, hold up, and plate out intended function. This portion of the system includes the nonsafety-related piping in the main flow path starting from the outboard main steam stop valves and continuing to, but not including, the main turbine stop valves. However, not included in the scope of license renewal is the portion of the Main Steam System from branch piping 2.5 inch NPS and smaller that is attached to the nonsafety-related Main Steam System piping in the Turbine Building that does not support the containment, hold up, and plate out function. Components that are not required to support the system's leakage boundary, structural support or containment, hold up, and plate out function are not included in the scope of license renewal.

Also included in the license renewal scoping boundary of the Main Steam System are those portions of nonsafety-related piping and equipment that extend beyond the safety-related/nonsafety-related interface up to the location of the first seismic anchor, or to a point no longer in proximity to equipment performing a safety-related function, whichever extends furthest. This includes the nonsafety-related portions of the system located within the Primary Containment, Reactor Building and Turbine Building. Included in this boundary are pressure-retaining components relied upon to preserve the leakage boundary and structural support intended function of this portion of the system. For more information, refer to the license renewal boundary drawing for identification of this boundary, shown in red.

Not included in the Main Steam System scoping boundary are the following interfacing systems, which are separately evaluated as license renewal systems:

Automatic Depressurization System
Chilled Water System
Compressed Air System
Equipment and Floor Drainage System
Feedwater System
High Pressure Coolant Injection System
Main Condenser Air Extraction System
Main Condenser System
Main Turbine and Auxiliary System

Nuclear Boiler Instrumentation System
Primary Containment Instrument Gas System
Process and Post-Accident Sampling System
Reactor Core Isolation Cooling System
Residual Heat Removal System

Reason for Scope Determination

The Main Steam System meets 10 CFR 54.4(a)(1) because portions of the system are safety-related and relied upon to remain functional during and following design basis events. It meets 10 CFR 54.4(a)(2) because failure of nonsafety-related portions of the system could prevent satisfactory accomplishment of function(s) identified for 10 CFR 54.4(a)(1). It also meets 10 CFR 54.4(a)(3) because it is relied upon in safety analyses and plant evaluations to perform a function that demonstrates compliance with the Commission's regulations for Fire Protection (10 CFR 50.48), Environmental Qualification (10 CFR 50.49), and Station Blackout (10 CFR 50.63). The Main Steam System is not relied upon in any safety analyses or plant evaluations to perform a function that demonstrates compliance with the Commission's regulation for Anticipated Transient Without Scram (10 CFR 50.62).

System Intended Functions

1. Provide reactor coolant pressure boundary. The main steam lines connect directly to the Reactor Vessel. Withstand the maximum pressure difference expected across the flow restrictor following the complete severance of a main steam line. 10 CFR 54.4(a)(1)

2. Provide primary containment boundary. The main steam isolation valves close automatically on isolation signals. 10 CFR 54.4(a)(1)

3. Sense process conditions and generate signals for primary containment and reactor isolation. Main steam high flow and main steam low pressure are input signals to the Primary Containment and reactor isolation logic. 10 CFR 54.4(a)(1)

4. Resist nonsafety-related SSC failure that could prevent satisfactory accomplishment of a safety-related function. Nonsafety-related piping downstream of the main steam stop valves to the turbine stop valves is relied upon to provide a containment, hold up, and plate out function for radioactivity released through main steam isolation valves leakage during post accident conditions. Other nonsafety-related piping located in the Primary Containment and Reactor Building is relied upon to provide a leakage boundary intended function. Nonsafety-related piping downstream of the turbine stop valves is relied upon to provide a structural support intended function. 10 CFR 54.4(a)(2)

5. Relied upon in safety analyses or plant evaluations to perform a function that demonstrates compliance with the Commission's regulations for Fire Protection (10 CFR 50.48). The safety relief valves are relied upon in the Fire Protection analysis for pressure control. 10 CFR 54.4(a)(3)

6. Relied upon in the safety analysis or plant evaluations to perform a function that demonstrates compliance with the Commission's regulations for Environmental Qualification (10 CFR 50.49). The safety relief valves are expected to operate in a harsh post LOCA environment. 10 CFR 54.4(a)(3)

7. Relied upon in safety analyses or plant evaluations to perform a function that demonstrates compliance with the Commission's regulations for Station Blackout (10 CFR 50.63). The main steam isolation valves going closed and the safety relief valves being available for pressure control are credited in the SBO analysis. 10 CFR 54.4(a)(3)

UFSAR References

5.2
5.4
6.2
7.3
10.3

License Renewal Boundary Drawings

LR-M-01-1, Sheet 1
LR-M-41-1, Sheet 1
LR-M-41-1, Sheet 2
LR-M-42-1, Sheet 1
LR-M-49-1, Sheet 1
LR-M-51-1, Sheet 1
LR-M-53-1, Sheet 1
LR-M-55-1, Sheet 1
LR-M-87-1, Sheet 2

Table 2.3.4-4 Main Steam System
Components Subject to Aging Management Review

Component Type	Intended Function
Bolting	Mechanical Closure
Bolting (Class 1)	Mechanical Closure
Class 1 Piping, Fittings and Branch Connections < NPS 4"	Pressure Boundary
Condensing Chamber (Class 1)	Pressure Boundary
Flow Element (Class 1)	Pressure Boundary
Flow Element (Class 1)	Throttle
Piping and Fittings	Leakage Boundary
Piping and Fittings	Pressure Boundary
Piping and Fittings	Structural Support
Piping and Fittings (Class 1)	Pressure Boundary
Piping and Fittings (Head Seal Leak Detection)	Pressure Boundary
Restricting Orifices	Leakage Boundary
Restricting Orifices	Pressure Boundary
Restricting Orifices (Class 1)	Pressure Boundary
Restricting Orifices (Class 1)	Throttle
Sparger (T-quencher)	Pressure Boundary
Strainer Body	Leakage Boundary
Strainer Body	Pressure Boundary
Thermowell	Leakage Boundary
Thermowell	Pressure Boundary
Turbine Casing	Structural Support
Valve Body	Leakage Boundary
Valve Body	Pressure Boundary
Valve Body	Structural Support
Valve Body (Class 1)	Pressure Boundary

The aging management review results for these components are provided in:

Table 3.4.2-4 Main Steam System
Summary of Aging Management Evaluation

This Page Intentionally Left Blank

2.4 SCOPING AND SCREENING RESULTS: STRUCTURES

The following structural components are addressed in this section:

- Auxiliary Boiler Building (2.4.1)
- Auxiliary Building Control/Diesel Generator Area (2.4.2)
- Auxiliary Building Service/Radwaste Area (2.4.3)
- Component Supports Commodity Group (2.4.4)
- Fire Water Pump House (2.4.5)
- Piping and Component Insulation Commodity Group (2.4.6)
- Primary Containment (2.4.7)
- Reactor Building (2.4.8)
- Service Water Intake Structures (2.4.9)
- Shoreline Protection and Dike (2.4.10)
- Switchyard (2.4.11)
- Turbine Building (2.4.12)
- Yard Structures (2.4.13)

2.4.1 Auxiliary Boiler Building

Structure Purpose

The Auxiliary Boiler Building is a structural steel and concrete masonry unit structure located north of the Reactor Building. The building is single story, with a small penthouse above the roof. It is approximately 131'-6" x 99'-6" in plan dimensions and partitioned into three area: the auxiliary steam boiler area, water treatment room, and a unit substation room. The building foundation consists of a reinforced concrete slab on grade supported on piles. Its roof is composed of precast concrete slabs supported by structural steel and protected with a roofing membrane. Access to the roof and the penthouse is provided from outside the building through a stairway. The building houses the nonsafety-related Auxiliary Steam and Fresh Water Supply System components and switchgear in the yard electrical substation room. The yard electrical substation provides power to the Fire Water Pump House that supports the plant fire protection system. The Auxiliary Boiler Building is located in the yard separated from safety-related systems, structures, and components (SSCs) such that its failure would not impact a safety-related function.

The purpose of the Auxiliary Boiler Building is to provide physical support, shelter, and protection for the nonsafety-related Auxiliary Steam and Fresh Water Supply System components and switchgear for the yard electrical substation. The yard electrical substation provides power to components required for fire protection, as required by 10 CFR 50.48. Other major components housed in the building include two oil fired boilers, a deaerator, three boiler feedwater pumps, fresh water tanks and pumps, ventilation, electrical and supporting equipment.

Included in the boundary of the Auxiliary Boiler Building are concrete anchors, a reinforced concrete foundation slab, structural steel, piles, bolting, doors, conduit, masonry walls, panels and racks, and roofing membrane. Structures and components that do not perform or support an intended function, such as Auxiliary Steam and Fresh Water Supply System equipment foundations and control facilities, stairs and platforms, are not included in the scope of license renewal. Refer to the "Components Subject to Aging Management Review" table below for a complete list of components included in the boundary of the Auxiliary Boiler Building.

Not included in the boundary of the Auxiliary Boiler Building are component supports and fire barriers. Component supports are identified and separately evaluated in the Component Support Commodity Group section. Fire barriers are identified and evaluated with the license renewal Fire Protection System.

For more detailed information, see UFSAR Sections 3.3.2.3 and 9.5.9.2.

Reason for Scope Determination

The Auxiliary Boiler Building is not in scope under 10 CFR 54.4(a)(1) because no portions of the structure are safety-related or relied upon to remain functional during and following design basis events. The Auxiliary Boiler Building is not in scope under 10 CFR 54.4(a)(2) because failure of nonsafety-related portions of the structure would not prevent satisfactory accomplishment of function(s) identified for 10 CFR 54.4(a)(1). It meets 10 CFR 54.4(a)(3) because it provides physical support, shelter and protection for systems, structures and components (SSCs) relied upon in safety analyses or plant evaluations to perform a function that demonstrates compliance with the Commission's regulation for Fire Protection (10 CFR

50.48). The structure is not relied upon in any safety analyses or plant evaluations to perform a function that demonstrates compliance with the Commission's regulations for Environmental Qualification (10 CFR 50.49), Anticipated Transients Without Scram (10 CFR 50.62), or Station Blackout (10 CFR 50.63).

Structure Intended Functions

1. Provides physical support, shelter and protection for systems, structures, and components relied upon in safety analyses or plant evaluations to perform a function that demonstrates compliance with the Commission's regulation for Fire Protection (10 CFR 50.48). 10 CFR 54.4(a)(3)

UFSAR References

3.3.2.3
3.6.1.2.1.16
9.5.1.2.34
9.5.9.2

License Renewal Boundary Drawings

LR-C-0002-0, Sheet 1

Table 2.4-1 **Auxiliary Boiler Building**
Components Subject to Aging Management Review

Component Type	Intended Function
Bolting (Structural)	Structural Support
Cable Trays	Structural Support
Concrete Anchors	Structural Support
Concrete: Foundation	Shelter, Protection
Concrete: Foundation	Structural Support
Conduit	Shelter, Protection
Conduit	Structural Support
Doors	Shelter, Protection
Masonry walls: Above-grade exterior	Shelter, Protection
Masonry walls: Above-grade exterior	Structural Support
Masonry walls: Interior	Shelter, Protection
Masonry walls: Interior	Structural Support
Miscellaneous steel (catwalks, stairs, handrails, ladders, vents and louvers, platforms, etc.)	Shelter, Protection
Panels, Racks, Cabinets, and Other Enclosures	Shelter, Protection
Panels, Racks, Cabinets, and Other Enclosures	Structural Support
Piles	Structural Support
Precast Panels	Shelter, Protection
Precast Panels	Structural Support
Roofing membrane	Shelter, Protection
Seals, gaskets, and moisture barriers (caulking, flashing and other sealants)	Shelter, Protection
Steel Components: All structural steel	Structural Support

The aging management review results for these components are provided in:

Table 3.5.2-1 Auxiliary Boiler Building
Summary of Aging Management Evaluation

2.4.2 Auxiliary Building Control/Diesel Generator Area

Structure Purpose

The Auxiliary Building Control/Diesel Generator Area is constructed of reinforced concrete and is located adjacent to, and north of the Reactor Building. The building is a multi-story structure; approximately 242 feet by 165 feet in plan area, comprised of reinforced concrete walls, slabs, foundation mat, roof, and structural steel. The roof is reinforced concrete supported by structural steel, protected with built-up roofing material. The building foundation consists of a reinforced concrete mat placed on engineered structural backfill that bears on the dense Vincentown Formation. The foundation and building walls are separated from the abutting buildings by seismic separation joints. Reinforced concrete isolation walls separate the service/radwaste and the control/diesel generator areas. The Auxiliary Building Control/Diesel Generator Area is classified as a seismic Category I structure, designed to maintain its structural integrity during and following postulated design basis accidents and extreme environmental conditions.

The Auxiliary Building Control/Diesel Generator Area is divided into compartments designed to provide physical separation for redundant mechanical and electrical safety-related components. The eastern compartments constitute the control area and the western compartments constitute the diesel generator area. There are no concrete masonry walls in the Control/Diesel Generator Area.

The Diesel Generator Area contains rooms that house the diesel fuel tanks, standby diesel generators, ventilation and electrical equipment and supporting systems. The diesel fuel oil storage tanks are located in four storage tank rooms, one for each diesel generator. Each room is enclosed by 3-hour fire barriers and the diesel generator area is separated from the control area by 3-hour fire barriers. Each diesel generator has separate air intake and exhaust building openings. The air intake opening is located on the upper part of the south wall of the diesel generator area consisting of a fixed louvered cover to protect the intake from weather with a shield provided for missile protection. The air intake and exhaust gas openings are designed to prevent contamination of the intake air by exhaust products. The exhaust stack is located on the building roof and is provided with a missile barrier. Other openings that penetrate the structure used for the safety-related ventilation systems fresh air intakes and exhaust ducts are also provided with missile barriers.

The Control Area contains compartments that house the control room envelope, cable spreading rooms, computer rooms, battery rooms, ventilation and electrical equipment and supporting systems. The control room envelope consists of the main control room, computer room, shift supervisors' office, ready room, instructional viewing area, and supporting facilities. The control room envelope is maintained at least 1/8 inch water gauge positive pressure relative to the control room adjacent areas. The control room envelope construction joints and penetrations for cable, pipe, HVAC duct, HVAC equipment, dampers, and doors are designed specifically for leak tightness. The Unit 2 cancelled control rooms were reconfigured for office space and conference rooms and are separate from the main control room.

The Auxiliary Building Control/Diesel Generator Area also contains unoccupied space, empty rooms or rooms with abandoned equipment from the Unit 2 plant cancelled areas. There are several stairways, two elevators, and a grade level (elevation 102') truck hatch, which allow movement within the building and access to the equipment.

The purpose of the Auxiliary Building Control/Diesel Generator Area is to provide structural support, shelter and protection to safety-related systems, components and structures housed within it during normal plant operation, and during and following postulated design basis accidents and extreme environmental conditions. The building contains the main control room, which is the main operation center for the plant providing a centralized area for control and monitoring of safety-related equipment. The control room in conjunction with control room HVAC system provides a habitable environment for plant operators so that the plant can be safely operated and shutdown under design basis accident conditions required by GDC 19 of 10 CFR 50, Appendix A, and meet 10 CFR 50.67 requirements. Major components within the building also include the standby diesel generators, electrical switchgear, and HVAC equipment. The building's reinforced concrete walls and floors meet both structural and radiation shielding requirements to allow personnel access for operating and maintaining equipment. The control/diesel generator area ventilation systems are evaluated with the Auxiliary Building Ventilation System. The Auxiliary Building Control/Diesel Generator Area also supports and protects nonsafety-related equipment including abandoned equipment and office space from the Unit 2 plant cancelled areas.

Included in the boundary of the Auxiliary Building Control/Diesel Generator Area are concrete elements of the building, concrete embedments and anchors, bolting, cable trays, doors, hatches, compressible joints and seals, conduit, racks, enclosures, steel components, miscellaneous steel, penetration seals, penetration sleeves, roofing membrane, pipe whip restraints, and tube track. The entire building is in scope for license renewal; except for rooms with abandoned equipment from the Unit 2 plant cancelled areas, office partitions and personnel facilities. The abandoned equipment, office partitions and personnel facilities do not perform a license renewal intended function and are not in scope for license renewal. Refer to the "Components Subject to Aging Management Review" table below for a complete list of components included in the boundary of the Auxiliary Building Control/Diesel Generator Area.

Not included in the boundary of the Auxiliary Building Control/Diesel Generator Area are component supports, cranes and hoists, building elevators, fire barriers and piping and component insulation. Component supports are evaluated with the Component Supports Commodity Group, the cranes and hoists are evaluated with the Cranes and Hoists System and fire barriers are evaluated with the Fire Protection System. The building elevators are evaluated with the Elevators and Manlifts, and the piping and component insulation is evaluated with the Piping and Component Insulation Commodity Group.

For more detailed information, see UFSAR Sections 3.8.4.1.2, 6.4, and 9.5.8.

Reason for Scope Determination

The Auxiliary Building Control/Diesel Generator Area meets 10 CFR 54.4(a)(1) because it is a safety-related structure that is relied upon to remain functional during and following design basis events. It meets 10 CFR 54.4(a)(2) because the structure provides physical support, shelter and protection for nonsafety-related systems, structures, and components (SSCs) whose failure could prevent satisfactory accomplishment of function(s) identified for 10 CFR 54.4(a)(1). It also meets 10 CFR 54.4(a)(3) because it provides physical support, shelter and protection for systems, structures and components (SSCs) relied upon in safety analyses or plant evaluations to perform a function that demonstrates compliance with the Commission's regulations for Fire Protection (10 CFR 50.48), Anticipated Transients Without Scram (10 CFR 50.62), and Station Blackout (10 CFR 50.63). The Auxiliary Building Control/Diesel

Generator Area is not relied upon in any safety analyses or plant evaluations to perform a function that demonstrates compliance with the Commission's regulation for Environmental Qualification (10 CFR 50.49).

Structure Intended Functions

1. Provides physical support, shelter and protection for safety-related systems, structures, and components (SSCs). 10 CFR 54.4(a)(1)

2. Provide centralized area for control and monitoring of nuclear safety-related equipment. 10 CFR 54.4(a)(1)

3. Provides physical support, shelter, and protection for nonsafety-related systems, structures, and components (SSCs) whose failure could prevent satisfactory accomplishment of function(s) identified for 10 CFR 54.4 (a)(1). 10 CFR 54.4(a)(2)

4. Provides physical support, shelter and protection for systems, structures, and components relied upon in safety analyses or plant evaluations to perform a function that demonstrates compliance with the Commission's regulations for Fire Protection (10 CFR 50.48). 10 CFR 54.4(a)(3)

5. Provides physical support, shelter, and protection for systems, structures, and components relied upon in safety analyses or plant evaluations to perform a function that demonstrates compliance with the Commission's regulations for Anticipated Transient without Scram (10 CFR 50.62). 10 CFR 54.4(a)(3)

6. Provides physical support, shelter and protection for systems, structures, and components relied upon in safety analyses or plant evaluations to perform a function that demonstrates compliance with the Commission's regulations for Station Blackout (10 CFR 50.63). 10 CFR 54.4(a)(3)

UFSAR References

1.2.3
3.1
3.2
3.4
3.6
3.8.4.1
3.8.5.1
6.4
9.5.8

License Renewal Boundary Drawings

LR-C-0002-0, Sheet 1

Table 2.4-2 **Auxiliary Building Control/Diesel Generator Area**
Components Subject to Aging Management Review

Component Type	Intended Function
Bolting (Structural)	Structural Support
Cable Trays	Structural Support
Compressible Joints and Seals (Seismic Gaps)	Expansion / Separation
Concrete Anchors	Structural Support
Concrete Curbs	Direct Flow
Concrete Embedments	Structural Support
Concrete: Above-grade exterior	Flood Barrier
Concrete: Above-grade exterior	Missile Barrier
Concrete: Above-grade exterior	Shelter, Protection
Concrete: Above-grade exterior	Shielding
Concrete: Above-grade exterior	Structural Support
Concrete: Below-grade exterior	Flood Barrier
Concrete: Below-grade exterior	Missile Barrier
Concrete: Below-grade exterior	Shelter, Protection
Concrete: Below-grade exterior	Structural Support
Concrete: Foundation	Flood Barrier
Concrete: Foundation	Shelter, Protection
Concrete: Foundation	Structural Support
Concrete: Interior	Flood Barrier
Concrete: Interior	HELB/MELB Shielding
Concrete: Interior	Missile Barrier
Concrete: Interior	Shelter, Protection
Concrete: Interior	Shielding
Concrete: Interior	Structural Support
Conduit	Shelter, Protection
Conduit	Structural Support
Doors	Flood Barrier
Doors	HELB/MELB Shielding
Doors	Missile Barrier
Doors	Shelter, Protection
Equipment foundations	Structural Support
Hatches/Plugs	HELB/MELB Shielding
Hatches/Plugs	Missile Barrier

Component Type	Intended Function
Hatches/Plugs	Shelter, Protection
Hatches/Plugs	Structural Support
Miscellaneous steel (catwalks, stairs, handrails, ladders, vents and louvers, platforms, etc.)	Structural Support
Panels, Racks, Cabinets, and Other Enclosures	Shelter, Protection
Panels, Racks, Cabinets, and Other Enclosures	Structural Support
Penetration seals	Flood Barrier
Penetration seals	HELB/MELB Shielding
Penetration seals	Shelter, Protection
Penetration sleeves	Flood Barrier
Penetration sleeves	HELB/MELB Shielding
Penetration sleeves	Structural Support
Pipe Whip Restraints and Jet Impingement Shields	HELB/MELB Shielding
Pipe Whip Restraints and Jet Impingement Shields	Pipe Whip Restraint
Roofing membrane	Shelter, Protection
Seals, gaskets, and moisture barriers (caulking, flashing and other sealants)	Flood Barrier
Seals, gaskets, and moisture barriers (caulking, flashing and other sealants)	Shelter, Protection
Steel Components (Curbs)	Direct Flow
Steel Components: All structural steel	Missile Barrier
Steel Components: All structural steel	Structural Support
Tube Track	Structural Support

The aging management review results for these components are provided in:

Table 3.5.2-2 Auxiliary Building Control/Diesel Generator Area Summary of Aging Management Evaluation

2.4.3 Auxiliary Building Service/Radwaste Area

Structure Purpose

The Auxiliary Building Service/Radwaste Area is constructed of reinforced concrete and structural steel and is located adjacent to, and east of the Reactor Building. The building is a multi-story structure, separated into three sections, with a total length of approximately 550 feet and 88 or 70 feet wide for the different sections. The northern section of the radwaste/service area is structurally continuous with the plant cancelled area (Unit 2 reactor building), the central section with the Auxiliary Building Control/Diesel Generator Area, and the southern section with the Reactor Building. Seismic joints separate the foundation mats and building walls of the structure sections and the abutting Turbine Building.

The structure is comprised of reinforced concrete, structural steel, reinforced concrete panel walls, removable concrete and lead block shielding plugs that are restrained with metal decking, and built-up roofing over the reinforced concrete roof slab. The building foundations consist of a reinforced concrete mats placed on engineered structural backfill that bears on the dense Vincentown Formation. The building roof supports HVAC fan room, the north and the south plant vent stack enclosures, and access hatches. The HVAC fan room and the vent stack enclosures are comprised of structural steel and metal siding. The building is classified as a seismic Category I structure, designed to maintain its structural integrity during and following postulated design basis accidents and extreme environmental conditions. The HVAC fan room, and the north and south vent stack enclosures are classified nonsafety-related, non-seismic structures.

The Auxiliary Building Service/Radwaste Area houses the remote shutdown panel, a section of the main steam line tunnel, cable tray areas, a pipe way, radwaste treatment and storage facilities, chemical lab, heating and ventilation equipment, machine shops, decontamination equipment, and personnel support facilities.

The service/radwaste area of the building is divided into compartments designed to protect safety-related systems and components and provide radiation shielding for vital safety-related components and plant personnel. Reinforced concrete walls separate the service/radwaste area from the control/diesel generator area and the reactor building. There are no concrete masonry walls in the service/radwaste area. The Auxiliary Building Service/Radwaste area includes rooms and compartments, which contain nonsafety-related Radwaste System components designed to collect, process, store, and prepare for disposal of liquid, gaseous and solid waste. Reinforced concrete walls and slabs are sealed to contain liquid radwaste within the building, in the event of system component failure. Storage areas are shielded to protect personnel in accessible portions of the radwaste areas to meet the requirements of 10 CFR 20.

The main steam tunnel section located in the Auxiliary Building Service/Radwaste Area contains the main steam and feedwater lines running between the reactor and turbine buildings. The main steam tunnel design includes blowout panels to protect the structure from overpressurization following a postulated main steam pipe break.

The Auxiliary Building Service/Radwaste Area also contains unoccupied space and empty rooms from the plant cancelled areas. There are several stairways, two elevators, and grade level (elevation 102') truck hatches, which allow movement within the building and access to the equipment and radwaste shipment.

The purpose of the Auxiliary Building Service/Radwaste Area is to provide structural support, shelter and protection to safety-related systems, structures and components (SSCs) housed within it during normal plant operation, and during and following postulated design basis accidents and extreme environmental conditions. The building contains the remote shutdown panel, which is an alternate center for achieving and maintaining plant safe shutdown conditions from outside the main control. The Auxiliary Building Service/Radwaste Area also supports and protects nonsafety-related SSCs whose failure could impact a safety-related function.

The building is sealed to prevent liquid radioactive waste from being released to the environment in the event of a Safe Shutdown Earthquake. The building's reinforced concrete walls and floors meet both structural and radiation shielding requirements to allow personnel access for operating and maintaining equipment. The Auxiliary Building Service/Radwaste Area in conjunction with Auxiliary Building Ventilation System components is designed to maintain the radwaste area at a slight negative pressure to prevent the unmonitored release of radioactivity to the environment.

Included in the boundary of the Auxiliary Building Service/Radwaste Area are concrete and structural steel elements of the building, concrete embedments and anchors, blowout panels, bolting, cable trays, doors, hatches/plugs, compressible joints and seals, conduit, racks, enclosures, steel components, decking, miscellaneous steel, penetration seals, penetration sleeves, roofing membrane, removable shielding plugs, metal components, and tube track. The entire building is in scope for license renewal; except for components that make up the roof mounted HVAC fan room, the north and south plant vent stack enclosures, and office partitions and personnel facilities. The HVAC fan room, the north and south plant vent stack enclosures, and office partitions and personnel facilities do not perform a license renewal intended function and are not in scope for license renewal. Refer to the "Components Subject to Aging Management Review" table below for a complete list of components included in the boundary of the Auxiliary Building Service/Radwaste Area.

Not included in the boundary of the Auxiliary Building Service/Radwaste Area are component supports, cranes and hoists, building elevators, fire barriers, north and south plant vent stacks (HVAC duct), and piping and component insulation. Component supports are evaluated with the Component Supports Commodity Group, the cranes and hoists are evaluated with the Cranes and Hoists System and fire barriers are evaluated with the Fire Protection System. The building elevators are evaluated with the Elevators and Manlifts, the north and south plant vent stacks (HVAC duct) are separately evaluated with Auxiliary Building Ventilation System, and the piping and component insulation is evaluated with the Piping and Component Insulation Commodity Group.

For more detailed information, see UFSAR Sections 3.6.1.2.1.1, 3.8.4.1.3, and 7.4.1.4.

Reason for Scope Determination

The Auxiliary Building Service/Radwaste Area meets 10 CFR 54.4(a)(1) because it is a safety-related structure that is relied upon to remain functional during and following design basis events. It meets 10 CFR 54.4(a)(2) because the structure provides physical support, shelter and protection for nonsafety-related systems, structures, and components (SSCs) whose failure could prevent satisfactory accomplishment of function(s) identified for 10 CFR 54.4(a)(1). It also meets 10 CFR 54.4(a)(3) because it provides physical support, shelter and protection for systems, structures and components (SSCs) relied upon in safety analyses or plant evaluations to perform a function that demonstrates compliance with the Commission's regulations for Fire Protection (10 CFR 50.48), Anticipated Transients Without Scram (10 CFR 50.62), and Station Blackout (10 CFR 50.63). The Auxiliary Building Service/Radwaste Area is not relied upon in any safety analyses or plant evaluations to perform a function that demonstrates compliance with the Commission's regulation for Environmental Qualification (10 CFR 50.49).

Structure Intended Functions

1. Provides physical support, shelter and protection for safety-related systems, structures, and components. 10 CFR 54.4(a)(1)

2. Provides physical support, shelter, and protection for nonsafety-related systems, structures, and components (SSCs) whose failure could prevent satisfactory accomplishment of function(s) identified for 10 CFR 54.4 (a)(1). 10 CFR 54.4(a)(2)

3. Prevents liquid radioactive waste from being released to the environment in the event of a Safe Shutdown Earthquake (SSE). 10 CFR 54.4(a)(2)

4. Provides physical support, shelter and protection for systems, structures, and components relied upon in safety analyses or plant evaluations to perform a function that demonstrates compliance with the Commission's regulation for Fire Protection (10 CFR 50.48). 10 CFR 54.4(a)(3)

5. Provides physical support, shelter and protection for systems, structures, and components relied upon in safety analyses or plant evaluations to perform a function that demonstrates compliance with the Commission's regulations for Anticipated Transients without Scram (10 CFR 50.62). 10 CFR 54.4(a)(3)

6. Provides physical support, shelter and protection for systems, structures, and components relied upon in safety analyses or plant evaluations to perform a function that demonstrates compliance with the Commission's regulation for Station Blackout (10 CFR 50.63). 10 CFR 54.4(a)(3)

UFSAR References

1.2.3
Table 3.2-1
3.4
3.6
3.8
7.4
11.2
11.3

License Renewal Boundary Drawings

LR-C-0002-0, Sheet 1

Table 2.4-3 **Auxiliary Building Service/Radwaste Area**
Components Subject to Aging Management Review

Component Type	Intended Function
Blowout Panel	Missile Barrier
Blowout Panel	Pressure Relief
Blowout Panel	Shelter, Protection
Bolting (Structural)	Structural Support
Cable Trays	Structural Support
Compressible Joints and Seals (Seismic Gaps)	Expansion / Separation
Concrete Anchors	Structural Support
Concrete Curbs	Direct Flow
Concrete Embedments	Structural Support
Concrete: Above-grade exterior	Flood Barrier
Concrete: Above-grade exterior	Missile Barrier
Concrete: Above-grade exterior	Shelter, Protection
Concrete: Above-grade exterior	Shielding
Concrete: Above-grade exterior	Structural Support
Concrete: Above-grade exterior	Water retaining boundary
Concrete: Below-grade exterior	Flood Barrier
Concrete: Below-grade exterior	Missile Barrier
Concrete: Below-grade exterior	Shelter, Protection
Concrete: Below-grade exterior	Structural Support
Concrete: Below-grade exterior	Water retaining boundary
Concrete: Foundation	Flood Barrier
Concrete: Foundation	Shelter, Protection
Concrete: Foundation	Structural Support
Concrete: Foundation	Water retaining boundary
Concrete: Interior	Flood Barrier
Concrete: Interior	HELB/MELB Shielding
Concrete: Interior	Missile Barrier
Concrete: Interior	Shelter, Protection
Concrete: Interior	Shielding
Concrete: Interior	Structural Support
Concrete: Interior	Water retaining boundary
Conduit	Shelter, Protection
Conduit	Structural Support
Doors	Flood Barrier
Doors	HELB/MELB Shielding

Component Type	Intended Function
Doors	Missile Barrier
Doors	Shelter, Protection
Doors	Water retaining boundary
Equipment foundations	Structural Support
Hatches/Plugs	HELB/MELB Shielding
Hatches/Plugs	Missile Barrier
Hatches/Plugs	Shelter, Protection
Hatches/Plugs	Shielding
Hatches/Plugs	Structural Support
Metal components: Steel curb	Direct Flow
Metal decking	Structural Support
Miscellaneous steel (catwalks, stairs, handrails, ladders, vents and louvers, platforms, etc.)	Shelter, Protection
Miscellaneous steel (catwalks, stairs, handrails, ladders, vents and louvers, platforms, etc.)	Structural Support
Panels, Racks, Cabinets, and Other Enclosures	Shelter, Protection
Panels, Racks, Cabinets, and Other Enclosures	Structural Support
Penetration seals	Flood Barrier
Penetration seals	HELB/MELB Shielding
Penetration seals	Shelter, Protection
Penetration sleeves	Flood Barrier
Penetration sleeves	HELB/MELB Shielding
Penetration sleeves	Structural Support
Roofing membrane	Shelter, Protection
Seals, gaskets, and moisture barriers (caulking, flashing and other sealants)	Flood Barrier
Seals, gaskets, and moisture barriers (caulking, flashing and other sealants)	Shelter, Protection
Spray Shields	Shelter, Protection
Steel Components: All structural steel	Missile Barrier
Steel Components: All structural steel	Structural Support
Tube Track	Structural Support

The aging management review results for these components are provided in:

Table 3.5.2-3 Auxiliary Building Service/Radwaste Area Summary of Aging Management Evaluation

2.4.4 Component Supports Commodity Group

Structure Purpose

The Component Supports Commodity Group consists of structural elements and specialty components designed to transfer the load applied from a system, structure, or component (SSC) to the building structural element or directly to the building foundation. Supports include seismic anchors or restraints, support frames, constant and variable spring hangers, rod hangers, sway struts, guides, stops, design clearances, straps, and clamps. Specialty components include snubbers, sliding surfaces, and vibration isolators. The commodity group is comprised of the following supports:

- Supports for ASME Class 1, 2 and 3 piping and components, including reactor vessel to biological shield wall stabilizer, reactor vessel skirt support anchorage, reactor vessel support ring girder and anchorage, control rod drive (CRD) housing supports and service water pumps.

- Supports for ASME Class MC components, including suppression chamber seismic restraints, suppression chamber support saddles and columns, and vent system supports.

- Supports for cable trays, conduit, HVAC ducts, tube track, instrument tubing and non-ASME piping and components.

- Supports for racks, panels, cabinets and enclosures for electrical equipment and instrumentation.

- Supports for emergency diesel generator (EDG), HVAC system components, and other miscellaneous mechanical equipment.

- Supports for platforms, pipe whip restraints, jet impingement shields, and other miscellaneous structures.

The purpose of a support is to transfer gravity, thermal, seismic, and other lateral loads imposed on or by the system, structure, or component to the supporting building structural element or foundation. Sliding surfaces when incorporated into the support design permit release of lateral forces but are relied upon to carry vertical load. Specialty supports such as snubbers only resist seismic forces. Vibration isolators are incorporated in the design of some vibrating equipment to minimize the impact of vibration. Other support types such as guides and position stops allow displacement in a specified direction or preclude unacceptable movements and interactions.

The Component Supports Commodity Group includes supports for mechanical, electrical and instrumentation systems, components, and structures that are in the scope of license renewal. The group also includes supports for SSCs, which are not in the scope of license renewal, but their supports are required to restrain or prevent physical interaction with safety-related SSCs (e.g. seismic II/I). The supports include support members, welded and bolted connections, Lubrite plates, vibration isolators, concrete anchors, concrete embedments, and grout.

Included in the boundary of the Component Supports Commodity Group for each of the supports indicated above are building concrete at locations of expansion and grouted anchors, grout pads for support base plates; high strength bolting for component supports; constant and

variable load spring hangers, guides, stops; sliding surfaces; support members, welds, bolted connections, support anchorage to building structure; and vibration isolation elements. Snubbers are also included in the boundary of this commodity group however, they are considered active components and are not subject to aging management review except for the end connections, which perform a passive function for structural support. Refer to the "Components Subject to Aging Management Review" table below for a complete list of components included in the boundary of the Component Supports Commodity Group.

Not included in the boundary of the Component Supports Commodity Group are equipment foundations, concrete embedments, and concrete anchors used for components other than supports listed herein. These commodities are evaluated separately with the license renewal structure that contains them.

For more detailed information, see UFSAR Sections 1.2.4.2.4, 3.6.2 and 6.6.

Reason for Scope Determination

The Component Supports Commodity Group meets 10 CFR 54.4(a)(1) because it has safety-related supports that are relied upon to remain functional during and following design basis events. The Component Supports Commodity Group meets 10 CFR 54.4(a)(2) because failure of nonsafety-related supports could prevent satisfactory accomplishment of function(s) identified for 10 CFR 54.4(a)(1). It meets 10 CFR 54.4(a)(3) because it provides physical support for systems, structures and components (SSCs) relied upon in the safety analyses and plant evaluations to perform a function that demonstrates compliance with the Commission's regulations for Fire Protection (10 CFR 50.48), Environmental Qualification (10 CFR 50.49), Anticipated Transients Without Scram (10 CFR 50.62), and Station Blackout (10 CFR 50.63).

Structure Intended Functions

1. Provides structural support or restraint to SSCs in the scope of license renewal. 10 CFR 54.4 (a)(1), (a)(2), (a)(3)

2. Provides structural support or restraint to SSCs not in the scope of license renewal to prevent interaction with safety-related SSCs. 10 CFR 54.4 (a)(2)

UFSAR References

1.2.4.2.4
1.8.1
3.6.2
3.6.2.6
3.8.3.1
5.3.3.1.4
6.6

License Renewal Boundary Drawings

Not Required

Table 2.4-4 **Component Supports Commodity Group**
Components Subject to Aging Management Review

Component Type	Intended Function
Supports for ASME Class 1 Piping and Components (Building concrete at locations of expansion and grouted anchors; grout pads for support base plates)	Structural Support
Supports for ASME Class 1 Piping and Components (Constant and variable load spring hangers; guides; stops)	Structural Support
Supports for ASME Class 1 Piping and Components (High strength bolting for NSSS component supports)	Structural Support
Supports for ASME Class 1 Piping and Components (Sliding surfaces)	Structural Support
Supports for ASME Class 1 Piping and Components (Support members; welds; bolted connections; support anchorage to building structure)	Structural Support
Supports for ASME Class 2 and 3 Piping and Components (Building concrete at locations of expansion and grouted anchors; grout pads for support base plates)	Structural Support
Supports for ASME Class 2 and 3 Piping and Components (Constant and variable load spring hangers; guides; stops)	Structural Support
Supports for ASME Class 2 and 3 Piping and Components (Sliding surfaces)	Structural Support
Supports for ASME Class 2 and 3 Piping and Components (Support members; welds; bolted connections; support anchorage to building structure)	Structural Support
Supports for ASME Class MC Components (Building concrete at locations of expansion and grouted anchors; grout pads for support base plates)	Structural Support
Supports for ASME Class MC Components (Constant and variable load spring hangers; guides; stops)	Structural Support
Supports for ASME Class MC Components (Sliding surfaces)	Structural Support

Component Type	Intended Function
Supports for ASME Class MC Components (Support members; welds; bolted connections; support anchorage to building structure)	Structural Support
Supports for Cable Trays, Conduit, HVAC Ducts, Tube Track, Instrument Tubing, Non-ASME Piping and Components (Building concrete at locations of expansion and grouted anchors; grout pads for support base plates)	Structural Support
Supports for Cable Trays, Conduit, HVAC Ducts, Tube Track, Instrument Tubing, Non-ASME Piping and Components (Support members; welds; bolted connections; support anchorage to building structure)	Structural Support
Supports for Emergency Diesel Generator, HVAC System Components, and Other Misc Mechanical Equipment (Building concrete at locations of expansion and grouted anchors; grout pads for support base plates)	Structural Support
Supports for Emergency Diesel Generator, HVAC System Components, and Other Misc Mechanical Equipment (Support members; welds; bolted connections; support anchorage to building structure)	Structural Support
Supports for Emergency Diesel Generator, HVAC System Components, and Other Misc Mechanical Equipment (Vibration isolation elements)	Structural Support
Supports for Emergency Diesel Generator, HVAC System Components, and Other Misc Mechanical Equipment (Vibration isolation elements)	Vibration Isolation
Supports for Platforms, Pipe Whip Restraints, Jet Impingement Shields, and Other Misc Structures (Building concrete at locations of expansion and grouted anchors; grout pads for support base plates)	Structural Support

Component Type	Intended Function
Supports for Platforms, Pipe Whip Restraints, Jet Impingement Shields, and Other Misc Structures (Support members; welds; bolted connections; support anchorage to building structure)	Structural Support
Supports for Racks, Panels, Cabinets, and Enclosures for Electrical Equipment and Instrumentation (Building concrete at locations of expansion and grouted anchors; grout pads for support base plates)	Structural Support
Supports for Racks, Panels, Cabinets, and Enclosures for Electrical Equipment and Instrumentation (Support members; welds; bolted connections; support anchorage to building structure)	Structural Support

The aging management review results for these components are provided in:

Table 3.5.2-4 Component Supports Commodity Group Summary of Aging Management Evaluation

2.4.5 Fire Water Pump House

Structure Purpose

The Fire Water Pump House is a single story above grade concrete structure, approximately 22 feet by 63 feet in plan. The building is located north of the Reactor Building in the yard, separated from safety-related systems, structures, and components (SSCs) such that its failure would not impact a safety-related function. The exterior walls are constructed of concrete masonry block with reinforcement steel. The interior of the building has been partitioned with concrete masonry block walls that provide a fire barrier intended function and provide separate areas for the different types of pumps housed by the structure. The building houses the diesel driven fire pump, motor driven fire pump and jockey pump that support the plant fire protection system. The fuel supply for the diesel driven fire pump is located outside the building on a concrete pad, located on the west side of the building. The building also houses pumps that were used during plant construction and have been abandoned in place. The building foundation consists of a reinforced concrete slab on piles. The roof is constructed of metal decking on structural steel framing, supported on pilasters integral with the exterior walls, which is protected with a roofing membrane.

The purpose of the Fire Water Pump House is to provide structural support, shelter and protection for components required for fire protection, as required by 10 CFR 50.48. Major components housed in the building include the diesel driven fire pump, motor driven fire pump and jockey pump, associated piping and piping components, controls and instrumentation, and electrical panels and enclosures.

Included in the boundary of the Fire Water Pump House are concrete anchors and blocks, a reinforced concrete foundation slab, structural steel, piles, bolting, doors, conduit, panels and racks, penetration seals, penetration sleeves, and roofing membrane. Structures and components that do not perform or support an intended function, such as abandoned equipment foundations and controls, are not included in the scope of license renewal. Refer to the "Components Subject to Aging Management Review" table below for a complete list of components included in the boundary of the Fire Water Pump House.

Not included in the boundary of the Fire Water Pump House are component supports and fire barriers, as well as the adjacent water storage tank foundations. Component Supports are identified and separately evaluated in the Component Supports Commodity Group section. Fire barriers are identified and evaluated with the Fire Protection System. The adjacent water storage tank foundations are separately evaluated with Yard Structures.

For more detailed information, see UFSAR Section 9.5.1.2.3.2.

Reason for Scope Determination

The Fire Water Pump House is not in scope under 10 CFR 54.4(a)(1) because no portion of the structure is safety-related or relied upon to remain functional during and following design basis events. The Fire Water Pump House is not in scope under 10 CFR 54.4(a)(2) because failure of nonsafety-related portions of the structure would not prevent satisfactory accomplishment of function(s) identified for 10 CFR 54.4(a)(1). It meets 10 CFR 54.4(a)(3) because it provides physical support, shelter and protection for systems, structures and components (SSCs) relied upon in safety analyses or plant evaluations to perform a function

that demonstrates compliance with the Commission's regulation for Fire Protection (10 CFR 50.48). The structure is not relied upon in any safety analyses or plant evaluations to perform a function that demonstrates compliance with the Commission's regulations for Environmental Qualification (10 CFR 50.49), Anticipated Transients Without Scram (10 CFR 50.62), or Station Blackout (10 CFR 50.63).

Structure Intended Functions

1. Provides physical support, shelter and protection for systems, structures, and components relied upon in safety analyses or plant evaluations to perform a function that demonstrates compliance with the Commission's regulation for Fire Protection (10 CFR 50.48). 10 CFR 54.4(a)(3)

UFSAR References

9.5.1.2.3.2

License Renewal Boundary Drawings

LR-C-0002-0, Sheet 1

Table 2.4-5 **Fire Water Pump House**
Components Subject to Aging Management Review

Component Type	Intended Function
Bolting (Structural)	Structural Support
Concrete Anchors	Structural Support
Concrete: Foundation	Shelter, Protection
Concrete: Foundation	Structural Support
Conduit	Shelter, Protection
Conduit	Structural Support
Doors	Shelter, Protection
Equipment foundations	Structural Support
Masonry walls: Above-grade exterior	Shelter, Protection
Masonry walls: Above-grade exterior	Structural Support
Masonry walls: Interior	Shelter, Protection
Masonry walls: Interior	Structural Support
Metal decking	Shelter, Protection
Metal decking	Structural Support
Miscellaneous steel (catwalks, stairs, handrails, ladders, vents and louvers, platforms, etc.)	Shelter, Protection
Panels, Racks, Cabinets, and Other Enclosures	Shelter, Protection
Panels, Racks, Cabinets, and Other Enclosures	Structural Support
Penetration seals	Shelter, Protection
Penetration sleeves	Structural Support
Piles	Structural Support
Roofing membrane	Shelter, Protection
Seals, gaskets, and moisture barriers (caulking, flashing and other sealants)	Shelter, Protection
Steel components: All structural steel	Structural Support
Tube Track	Structural Support

The aging management review results for these components are provided in:

Table 3.5.2-5 Fire Water Pump House
Summary of Aging Management Evaluation

2.4.6 Piping and Component Insulation Commodity Group

Structure Purpose

The Piping and Component Insulation Commodity Group is comprised of pre-fabricated blankets, modules, or panels engineered as integrated assemblies to fit the surface to be insulated and to fit easily against the piping and components. The insulation group includes metallic and nonmetallic materials.

Metallic insulation or reflective mirror insulation is fabricated from stainless steel material. Nonmetallic insulation consists of calcium silicate, fiberglass and fiberglass molded insulation, cellular glass, ceramic fiber, Nukon insulation, and "Min-K" insulation. Anti-sweat insulation used on chilled water systems consists of fiberglass insulation material jacketed with stainless steel or aluminum jacketing. The fiberglass and calcium silicate insulation is covered with stainless steel or aluminum protective jackets held in-place by stainless steel tie wire, straps or clips. In some cases, stainless steel wire mesh is used to cover the insulation instead of the protective jacket. The Piping and Component Insulation Commodity Group is not classified as a safety-related commodity.

The purpose of piping and component insulation is to improve thermal efficiency, minimize heat loads on the HVAC systems, provide for personnel protection, or prevent freezing of heat traced piping, and protect against sweating of cold piping and components. Insulation located in areas with safety-related equipment is designed to protect nearby safety-related SSC equipment from overheating and maintain its structural integrity during postulated design basis seismic events. Insulation within Primary Containment has been evaluated to ensure that it will not affect the Emergency Core Cooling Systems (ECCS) suction strainers.

Included in the boundary of the Piping and Component Insulation Commodity Group is insulation for all piping and components. Piping and component insulation inside safety-related structures, and in scope piping and components located in the outdoor environment are in the scope of license renewal. The insulation, insulation jacking (includes wire mesh, tie wires, straps, clips) perform an intended function and are in the scope of license renewal under 10 CFR 54.4(a)(2). Insulation for the not in scope piping and components located in nonsafety-related structures is not in the scope of license renewal. Refer to the "Components Subject to Aging Management Review" table below for a complete list of components included in the boundary of the Piping and Component Insulation Commodity Group.

For more detailed information, see UFSAR Sections 5.3.3.1.4.4, 5.4.1.3, and 6.2.2.2.2.

Reason for Scope Determination

The Piping and Component Insulation Commodity Group is not in scope under 10 CFR 54.4(a)(1) because no portions of the insulation are safety-related or relied on to remain functional during and following design basis events. The Piping and Component Insulation Commodity Group is in scope under 10 CFR 54.4(a)(2) because failure of the nonsafety-related commodity could prevent satisfactory accomplishment of function(s) identified for 10 CFR 54.4(a)(1). The insulation group is not in scope under 10 CFR 54.4(a)(3) because it is not relied upon in safety analyses or plant evaluations to perform a function that demonstrates compliance with the Commission's regulations for Fire Protection (10 CFR 50.48),

Environmental Qualification (10 CFR 50.49), Anticipated Transients Without Scram (10 CFR 50.62), or Station Blackout (10 CFR 50.63).

Structure Intended Functions

1. Provides physical support, shelter, and protection for nonsafety-related systems, structures, and components (SSCs) whose failure could prevent satisfactory accomplishment of function(s) identified for 10 CFR 54.4(a)(1). 10 CFR 54.4(a)(2)

UFSAR References

1.12.3.6
5.2.3.2.4
5.3.3.1.4.4
5.4.1.3
6.1
6.2.2.2.2
6.2.4.3.2.1
9.5.1.1.7
10.3.6

License Renewal Boundary Drawings

Not Required

Table 2.4-6 **Piping and Component Insulation Commodity Group**
Components Subject to Aging Management Review

Component Type	Intended Function
Insulation	Thermal Insulation
Insulation jacketing (includes wire mesh, tie wires, straps, clips)	Shelter, Protection
Insulation jacketing (includes wire mesh, tie wires, straps, clips)	Structural Support

The aging management review results for these components are provided in:

Table 3.5.2-6 Piping and Component Insulation Commodity Group Summary of Aging Management Evaluation

2.4.7 Primary Containment

Structure Purpose

The Primary Containment is comprised of the primary containment structure, primary containment penetrations, and internal structures of the primary containment structure. The Primary Containment is completely enclosed by the Reactor Building. The Reactor Building provides the secondary containment pressure boundary, structural support, shielding, shelter and protection for Primary Containment and the components housed within, against external design basis events.

The Primary Containment is a General Electric Mark I design and consists of a drywell, a pressure suppression chamber, and a vent system connecting the drywell and the pressure suppression chamber. It is designed, fabricated, inspected, and tested in accordance with the requirements of Subsection NE, Requirements for MC Components, of the ASME Boiler and Pressure Vessel Code, Section III. The Primary Containment is safety-related and classified as a seismic Category I structure.

The drywell is a steel pressure vessel, in the shape of an inverted light bulb, with a spherical lower section, a cylindrical upper section, and a removable, flanged, hemi-ellipsoidal top head. Inner and outer steel cylindrical skirts, that are encased in concrete and anchored to a concrete pedestal, support the drywell. The concrete pedestal that supports the drywell is founded on the foundation slab of the Reactor Building. The outer skirt is designed to transfer the drywell loads at the bottom of the drywell into the foundation. The inner skirt extends into the drywell and transfers reactor pressure vessel (RPV) pedestal loads into the foundation. Above the foundation transition zone of the drywell shell and concrete is an air gap of nominally 2 inches that separates the drywell vessel from the concrete drywell shield wall. The air gap permits displacement of the vessel but the size of the gap is limited to allow transfer of postulated jet impingement forces into the drywell shield wall without rupturing the vessel. At the foundation transition zone of the drywell shell and concrete are four drains equally spaced around the perimeter of the drywell shell that will drain potential water intrusion from the air gap. There is no sand bed region or sand in the foundation transition zone of the drywell shell and concrete and the air gap. The outside surface of the drywell shell is coated with inorganic zinc. The drywell head is bolted to the drywell flange and is sealed with a double seal arrangement.

Access into the drywell is through a personnel airlock/equipment hatch, with two mechanically interlocked doors, and the other equipment access hatch. The drywell houses the reactor pressure vessel, the reactor coolant recirculation system, safety relief valves, branch connections of the reactor primary system, a drywell spray header, and internal structures discussed below.

The pressure suppression chamber is a toroidal shaped, steel pressure vessel encircling the base of drywell. The pressure suppression chamber, commonly called the torus, is partially filled with demineralized water and includes internal steel framing, and access hatches. The pressure suppression chamber is mounted on support structures that transmit loads to the Reactor Building foundation. Major components inside the pressure suppression chamber include Emergency Core Cooling Systems (ECCS) suction strainers, pressure suppression chamber (torus) spray header, vent line header and downcomers, and T-quenchers.

The vent system consists of eight circular vent lines, which form a connection between the drywell and the pressure suppression chamber. The lines enter the pressure suppression chamber through penetrations provided with expansion bellows (inboard and outboard) and join into a common header contained within the air space of the pressure suppression chamber. The header discharge is through downcomer pipes, which terminate below the water level in the pressure suppression chamber. The header and the downcomer pipes are supported from the pressure suppression chamber shell.

The Primary Containment is provided with a vacuum breaker system to equalize the pressure between the drywell and the pressure suppression chamber, and between the pressure suppression chamber and the Reactor Building. The vacuum breaker system assures that the design pressure limits are not exceeded for the two steel pressure vessels, the drywell and pressure suppression chamber.

The Primary Containment is penetrated at multiple locations by piping, instrument lines, and electrical raceways. The penetrations consist of sleeves welded to the drywell shell or pressure suppression chamber. Two general types of process pipe penetrations are provided: those that must accommodate thermal movement and those that experience insignificant thermal stress. Penetrations required to accommodate thermal movements are provided with expansion bellows.

Internal structures consist of a fill slab, reactor pedestal, biological shield wall and its lateral support structural steel, and miscellaneous steel.

The fill slab is reinforced concrete placed to an elevation approximately 9 feet from the bottom of the drywell to provide a working base for supporting the reactor pedestal, and other structures and components inside the drywell.

The reactor pedestal is a reinforced concrete cylinder with an outside diameter of approximately 30 feet. The inside surface of the cylindrical pedestal is lined with carbon steel plate. The reactor pedestal provides structural support to the reactor pressure vessel, the biological shield wall, and floor framing. The biological shield wall extends above the reactor pedestal and is a composite steel plate and concrete cylindrical shell with an inside diameter of approximately 26 feet. The wall is filled partly with normal density concrete and partly with high-density concrete or grout. The top of the wall is capped with a steel plate and laterally braced to the drywell vessel.

Structural steel includes the floor framing steel for the various platforms inside the drywell, the RPV head insulation support frame, and a catwalk inside the pressure suppression chamber. Miscellaneous steel includes steel components such as grating, ladders, and handrails, inside primary containment.

The purpose of the Primary Containment is to accommodate, with a minimum of leakage, the pressures and temperatures resulting from the break of any enclosed process pipe, and thereby, to limit the release of radioactive fission products to values which will ensure offsite dose rates well below 10 CFR 50.67 guideline limits. It also provides a source of water for ECCS and for pressure suppression in the event of a loss-of-coolant accident. The Primary Containment and internal structures also provide structural support to the reactor pressure vessel, the reactor coolant systems, and other safety and nonsafety-related systems, structures, and components housed within the Primary Containment. The biological shield wall provides the added function of radiation shielding to maintain drywell environment within

equipment qualification parameters.

Included in the boundary of the Primary Containment are the drywell, drywell head, pressure suppression chamber, vent lines, downcomers, drywell and pressure suppression chamber penetrations, vent line bellows, drywell penetration bellows, personnel air lock/equipment and other hatches, pressure retaining bolting, thermowells, and internal structures mentioned above. Refer to the "Components Subject to Aging Management Review" table below for a complete list of components included in the boundary of the Primary Containment.

Not included in the boundary of the Primary Containment are safety relief valves and discharge lines, T-quenchers, pressure suppression chamber (torus) supports, drywell and torus spray headers, vacuum breakers, ECCS suction strainers, downcomer bracing, other component supports, fire barriers, and piping and component insulation. These components are separately evaluated with their respective license renewal systems. That is, safety relief valves and discharge lines, and T-quenchers are evaluated with the Main Steam System. Drywell and torus spray headers are evaluated with the Residual Heat Removal System and ECCS suction strainers are evaluated with the Reactor Core Isolation Cooling System, Core Spray System and Residual Heat Removal System. Vacuum breakers are evaluated with the Vacuum Relief Valve System. Fire barriers are evaluated with the Fire Protection System. Piping and component insulation is evaluated with the Piping and Component Insulation Commodity Group. Downcomer bracing, pressure suppression chamber supports, and other component supports are evaluated with the Component Supports Commodity Group.

For more detailed information, see UFSAR Sections 3.8 and 6.2.

Reason for Scope Determination

The Primary Containment meets 10 CFR 54.4(a)(1) because it is a safety-related structure that is relied upon to remain functional during and following design basis events. The Primary Containment meets 10 CFR 54.4(a)(2) because failure of nonsafety-related portions of the structure could prevent satisfactory accomplishment of function(s) identified for 10 CFR 54.4(a)(1). It also meets 10 CFR 54.4(a)(3) because it provides physical support, shelter and protection for systems, structures and components (SSCs) relied upon in safety analyses or plant evaluations to perform a function that demonstrates compliance with the Commission's regulations for Fire Protection (10 CFR 50.48), Environmental Qualification (10 CFR 50.49), Anticipated Transients Without Scram (10 CFR 50.62), and Station Blackout (10 CFR 50.63).

Structure Intended Functions

1. Provides physical support, shelter, and protection for safety-related systems, structures, and components (SSCs). 10 CFR 54.4(a)(1)

2. Controls the potential release of fission products to the external environment so that offsite consequences of design basis events are within acceptable limits. 10 CFR 54.4(a)(1)

3. Provides sufficient air and water volumes to absorb the energy released to the containment in the event of design basis events so that the pressure is within acceptable limits. 10 CFR 54.4(a)(1)

4. Provides a source of water for emergency core cooling systems. 10 CFR 54.4(a)(1)

5. Provides physical support, shelter, and protection for nonsafety-related systems, structures, and components (SSCs) whose failure could prevent satisfactory accomplishment of function(s) identified for 10 CFR 54.4 (a)(1). 10 CFR 54.4(a)(2)

6. Provides physical support, shelter, and protection for systems, structures, and components relied upon in safety analyses or plant evaluations to perform a function that demonstrates compliance with the Commission's regulation for Fire Protection (10 CFR 50.48). 10 CFR 54.4(a)(3)

7. Provides physical support, shelter, and protection for systems, structures, and components relied upon in safety analyses or plant evaluations to perform a function that demonstrates compliance with the Commission's regulation for Environmental Qualification (10 CFR 50.49). 10 CFR 54.4(a)(3)

8. Provides physical support, shelter, and protection for systems, structures, and components relied upon in safety analyses or plant evaluations to perform a function that demonstrates compliance with the Commission's regulation for Anticipated Transients Without Scram (10 CFR 50.62). 10 CFR 54.4(a)(3)

9. Provides physical support, shelter, and protection for systems, structures, and components relied upon in safety analyses or plant evaluations to perform a function that demonstrates compliance with the Commission's regulation for Station Blackout (10 CFR 50.63). 10 CFR 54.4(a)(3)

UFSAR References

1.1
1.2.4.2.9.1
3.5.1.2
3.8.2
3.8.3
6.2.1
6.2.2
6.2.3
6.5.2
6.5.3

License Renewal Boundary Drawings

LR-C-0002-0, Sheet 1

Table 2.4-7 **Primary Containment**
Components Subject to Aging Management Review

Component Type	Intended Function
Bolting (Containment Closure)	Pressure Boundary
Bolting (Containment Closure)	Structural Support
Bolting (Structural)	Structural Support
Cable Trays	Structural Support
Coatings	Maintain Adhesion
Concrete anchors	Structural Support
Concrete embedments	Structural Support
Concrete: Interior	Structural Support
Concrete: Interior (Biological shield)	Shielding
Concrete: Interior (Biological shield)	Structural Support
Concrete: Interior (RPV Pedestal)	Structural Support
Conduit	Shelter, Protection
Conduit	Structural Support
Doors	Shielding
Hatches/Plugs	Pressure Boundary
Hatches/Plugs	Shelter, Protection
Miscellaneous steel (catwalks, stairs, handrails, ladders, platforms, etc.)	Structural Support
Panels, Racks, Cabinets, and Other Enclosures	Shelter, Protection
Panels, Racks, Cabinets, and Other Enclosures	Structural Support
Penetration bellows	Expansion / Separation
Penetration bellows	Pressure Boundary
Penetration seals (End Caps)	Pressure Boundary
Penetration sleeves	Pressure Boundary
Penetration sleeves	Shelter, Protection
Penetration sleeves	Structural Support
Personnel airlock, equipment hatch, CRD hatch	Pressure Boundary
Personnel airlock, equipment hatch, CRD hatch	Shelter, Protection
Personnel airlock, equipment hatch, CRD hatch: Locks, hinges, and closure mechanisms	Pressure Boundary

Component Type	Intended Function
Personnel airlock, equipment hatch, CRD hatch: Locks, hinges, and closure mechanisms	Structural Support
Pipe Whip Restraints and Jet Impingement Shields	HELB/MELB Shielding
Pipe Whip Restraints and Jet Impingement Shields	Pipe Whip Restraint
Seals, gaskets, and moisture barriers (caulking, flashing and other sealants)	Pressure Boundary
Steel Components: All structural steel	Structural Support
Steel Components: Biological shield lateral truss	Structural Support
Steel Components: Biological shield liner plates	Shielding
Steel Components: Biological shield liner plates	Structural Support
Steel Components: Radial beam seats in BWR Drywell	Structural Support
Steel Components: Sump Liners	Structural Support
Steel Components: Sump Liners	Water retaining boundary
Steel Elements: Drywell head; Downcomers	Pressure Boundary
Steel Elements: Drywell; Torus; Drywell Head; Embedded shell; Drywell support skirt; Torus ring girder; Downcomers	Pressure Boundary
Steel Elements: Drywell; Torus; Drywell Head; Embedded shell; Drywell support skirt; Torus ring girder; Downcomers	Structural Support
Steel Elements: Torus; Vent line; Vent header; Vent line bellows; Downcomers	Expansion / Separation
Steel Elements: Torus; Vent line; Vent header; Vent line bellows; Downcomers	Pressure Boundary
Thermowell	Pressure Boundary
Tube Track	Structural Support

The aging management review results for these components are provided in:

Table 3.5.2-7 Primary Containment
Summary of Aging Management Evaluation

2.4.8 Reactor Building

Structure Purpose

The Reactor Building is comprised of the unit 1 reactor building (herein referred to as reactor building) and the plant cancelled area, formerly the unit 2 reactor building.

Reactor building:

The reactor building is a reinforced concrete enclosure that consists of a cylindrical containment structure topped by a toroid spherical dome, with a rectangular lower section enclosing the base of the cylinder. The cylindrical portion completely encloses both the reactor and the pressure suppression primary containment system. The reactor building also houses the spent fuel storage pool, the steam dryer/moisture separator storage pool, the new fuel storage vault, reactor cavity, spent fuel storage pool skimmer surge tanks, reactor auxiliary equipment, refueling equipment, reactor vessel servicing equipment and engineered safety features (ESFs). The reactor building is a seismic Category I reinforced concrete structure designed to maintain its structural integrity during and following postulated design basis accidents and extreme environmental conditions.

The building has essentially seven floor levels, with the refueling floor and operating floor on the top floor, and the pressure suppression chamber (torus) and Emergency Core Cooling System (ECCS) pump rooms in the basement. The rectangular reinforced concrete foundation mat is 14 feet thick with the bottom of the mat approximately 61 feet below plant grade and founded on engineered structural backfill that bears on the dense Vincentown Formation. The mat also supports the southern portion of Auxiliary Building Service/Radwaste Area. The foundation is structurally independent of the other foundations, separated by a seismic joint. Above the base mat, the reactor building is approximately 250 feet high, consisting of a cylinder with a toroid spherical dome that has a steel liner plate on the underside, surrounded by a rectangular structure approximately 78 feet high. The cylinder section is a reinforced concrete shell 2.5 to 3.0 feet thick, with an inside diameter of 165 feet. The reinforced concrete floors are generally supported by structural steel framing systems that are in turn supported by reinforced concrete walls. Radial framing is used within the cylindrical portion, while framing in the rectangular area is laid out on east-west and north-south lines. The cylindrical wall above the refuel floor supports a 150-ton capacity, polar crane. All reinforced concrete walls and floors are designed to meet both structural and radiation shielding requirements. There are no concrete masonry unit walls used in the reactor building.

The purpose of the Reactor Building is to provide secondary containment when the primary containment is in service and to provide primary containment during reactor refueling and maintenance operations when the primary containment system is open. The primary objective of the building is to minimize ground level release of airborne radioactive fission products to values which will ensure offsite dose rates well below 10 CFR 50.67 guideline limits, and to provide for controlled, elevated release through the ventilation stack of the building's atmosphere under accident conditions. The Reactor Building also provides structural support, shelter, and protection to systems, structures, and components housed within, during normal plant operation, and during and following postulated design basis accidents and extreme environmental conditions.

During normal plant operation, the reactor building pressure is maintained at a negative pressure by the Reactor Building Ventilation System (RBVS), which also maintains airflow from areas of lesser contamination, to areas of greater potential contamination. Following a LOCA, the RBVS is automatically shut down, and the Filtration, Recirculation, and Ventilation System (FRVS) is actuated. The FRVS ventilation system discharges the air through filters to the outdoors via a vent at the top of the reactor building. The FRVS is designed to maintain a negative building differential pressure to reduce ground leakage of fission products from the reactor building subsequent to these design basis accidents.

The secondary containment function of the Reactor Building is achieved through design and construction of low leakage of air through the access control doors, pipe and electrical penetration seals and the building walls. Personnel access openings to the building are provided with interlocked double door, air lock system to minimize reactor building leakage. The door design has been considered within the capability of the RBVS and FRVS to maintain reactor building leakage within the required limits. Passage through any of the double door entrances to the reactor building can occur without loss of secondary containment integrity.

Safety-related systems and components are protected against the effects of pipe whip, which might result from piping failures of high energy lines. This protection is provided by either spatial separation (compartmentation) or pipe whip restraints. Each of the ECCS pumps and its associated components are located in individual compartments within the reactor building to provide physical separation. Protection against overpressurization of the various essential equipment compartments in the reactor building as a result of line breaks in these areas is provided by interconnecting steam venting paths between the various compartments and by blowout panels leading to the outside atmosphere.

Plant cancelled area:

The plant cancelled area is a three story reinforced concrete and structural steel enclosure that is rectangular in shape and is located in the northwest quadrant of the power complex, adjacent to the Auxiliary Building Control/Diesel Generator Area. The rectangular reinforced concrete foundation mat is 14 feet thick with the bottom of the mat approximately 61 feet below plant grade and founded on engineered structural backfill that bears on the dense Vincentown Formation. The mat also supports the northern portion of Auxiliary Building Service/Radwaste Area. The foundation is structurally independent of the other foundations, separated by a seismic joint. Above the base mat, the plant cancelled area is approximately 78 feet high consisting of a cylinder area surrounded by a rectangular structure. Radial framing is used within the cylindrical portion, while framing in the rectangular area is laid out on east-west and north-south lines. The central portion of the roof consists of cellular metal decking and built-up roofing material and the remaining roof is reinforced concrete. The building does not house any safety-related equipment.

The plant cancelled area is classified as a seismic Category I structure. However, since the plant cancelled area does not house any safety-related systems or components, the structure does not perform a 10 CFR 54.4(a)(1) intended function. The structure is required to maintain its structural integrity to prevent a failure which could impact a safety-related function of the adjacent safety-related systems, structures, and components. The plant cancelled area is thus in the scope of license renewal for 10 CFR 54.4 (a)(2) only.

Included in the boundary of the Reactor Building are blow out panels, bolting, cable trays, compressible joints and seals, concrete elements of the building, concrete anchors and

embedments, conduit, doors, equipment foundations, hatches and plugs, inflatable seals, metal panels, miscellaneous steel, panels, racks, and other enclosures, penetration bellows, penetration seals, penetration sleeves, pipe whip restraints, roofing membrane, refueling bellows, seals and gaskets, spray shields, steel components, and tube track. Also included in the boundary of the Reactor Building is the spent fuel storage pool liner, cask loading pit liner, reactor cavity liner, steam dryer/moisture separator storage pool liner, and spent fuel storage pool skimmer surge tank liner. The components in the boundary of the building are in the scope of license renewal and subject to aging management review. Refer to the "Components Subject to Aging Management Review" table below for a complete list of components included in the boundary of the Reactor Building.

Not included in the boundary of the Reactor Building is the reactor building ventilation system components, the filtration, recirculation, and ventilation system components, other mechanical and electrical systems and components housed within the building, fire barriers, the refueling platform, new fuel storage racks and spent fuel storage racks, miscellaneous cranes, including reactor building polar crane and hoists, building elevators, component supports, and piping and component insulation. These components are separately evaluated with their respective license renewal systems. That is, the reactor building ventilation system components are evaluated with the Reactor Building Ventilation System, the filtration, recirculation, and ventilation system components with the Filtration, Recirculation, and Ventilation System and other mechanical and electrical systems and components housed inside the structure are separately evaluated with their respective mechanical systems, electrical systems, or commodities. Fire barriers are evaluated with the Fire Protection System and the refueling platform, new fuel storage racks, and spent fuel storage racks are evaluated with the Fuel Handling and Storage System. The miscellaneous cranes and hoists are evaluated with the Cranes and Hoists System, and the building elevators are evaluated with Elevators and Manlifts, and component supports are evaluated with the Component Supports Commodity Group. Piping and component insulation is evaluated with the Piping and Component Insulation Commodity Group.

For more detailed information, see UFSAR Sections 1.2.2.1, 3.8.4.1.1, 3.8.5.1, and 6.2.3.2.1.

Reason for Scope Determination

The Reactor Building meets 10 CFR 54.4(a)(1) because it is a safety-related structure that is relied upon to remain functional during and following design basis events. The Reactor Building meets 10 CFR 54.4(a)(2) because failure of nonsafety-related portions of the structure could prevent satisfactory accomplishment of function(s) identified for 10 CFR 54.4(a)(1). It also meets 10 CFR 54.4(a)(3) because it provides physical support, shelter and protection for systems, structures and components (SSCs) relied upon in safety analyses or plant evaluations to perform a function that demonstrates compliance with the Commission's regulations for Fire Protection (10 CFR 50.48), Environmental Qualification (10 CFR 50.49), Anticipated Transients Without Scram (10 CFR 50.62), and Station Blackout (10 CFR 50.63).

Structure Intended Functions

1. Provides physical support, shelter, and protection for safety-related systems, structures, and components (SSCs). 10 CFR 54.4(a)(1)

2. Controls the potential release of fission products to the external environment so that offsite consequences of design basis events are within acceptable limits. 10 CFR 54.4(a)(1)

3. Provides for the discharge of treated gaseous waste to meet the requirements of 10 CFR 50.67. 10 CFR 54.4(a)(1)

4. Provides protection for safe storage of new and spent fuel. 10 CFR 54.4 (a)(1)

5. Provides physical support, shelter, and protection for nonsafety-related systems, structures, and components (SSCs) whose failure could prevent satisfactory accomplishment of function(s) identified for 10 CFR 54.4 (a)(1). 10 CFR 54.4(a)(2)

6. Provides physical support, shelter, and protection for systems, structures, and components relied upon in safety analyses or plant evaluations to perform a function that demonstrates compliance with the Commission's regulation for Fire Protection (10 CFR 50.48). 10 CFR 54.4(a)(3)

7. Provides physical support, shelter, and protection for systems, structures, and components relied upon in safety analyses or plant evaluations to perform a function that demonstrates compliance with the Commission's regulation for Environmental Qualification (10 CFR 50.49). 10 CFR 54.4(a)(3)

8. Provides physical support, shelter, and protection for systems, structures, and components relied upon in safety analyses or plant evaluations to perform a function that demonstrates compliance with the Commission's regulation for Anticipated Transients Without Scram (10 CFR 50.62). 10 CFR 54.4(a)(3)

9. Provides physical support, shelter, and protection for systems, structures, and components relied upon in safety analyses or plant evaluations to perform a function that demonstrates compliance with the Commission's regulation for Station Blackout (10 CFR 50.63). 10 CFR 54.4(a)(3)

UFSAR References

1.1
1.2.2.1
1.2.3
1.2.4.2.9.1
2.5.4.10.1
3.4.1
3.5.2
3.6.1
3.8.4.1.1
3.8.5.1
6.2.3.2.1
Table 6.2-14
Table 6.2-14a
Table 6.2-26
6.3.1.1.3
6.5.3.2
6.8
10.3
12.2.1

License Renewal Boundary Drawings

LR-C-0002-0, Sheet 1

Table 2.4-8 **Reactor Building**
Components Subject to Aging Management Review

Component Type	Intended Function
Blowout Panel	Pressure Relief
Blowout Panel	Shelter, Protection
Bolting (Structural)	Structural Support
Cable Trays	Structural Support
Compressible Joints and Seals (Inflatable Pool Seals)	Water retaining boundary
Compressible Joints and Seals (Seismic Gaps)	Expansion / Separation
Concrete Anchors	Structural Support
Concrete Curbs	Direct Flow
Concrete Embedments	Structural Support
Concrete: Above-grade exterior	Flood Barrier
Concrete: Above-grade exterior	Missile Barrier
Concrete: Above-grade exterior	Shelter, Protection
Concrete: Above-grade exterior	Shielding
Concrete: Above-grade exterior	Structural Pressure Boundary
Concrete: Above-grade exterior	Structural Support
Concrete: Below-grade exterior	Flood Barrier
Concrete: Below-grade exterior	Missile Barrier
Concrete: Below-grade exterior	Shelter, Protection
Concrete: Below-grade exterior	Structural Pressure Boundary
Concrete: Below-grade exterior	Structural Support
Concrete: Foundation	Flood Barrier
Concrete: Foundation	Shelter, Protection
Concrete: Foundation	Structural Pressure Boundary
Concrete: Foundation	Structural Support
Concrete: Interior	Flood Barrier
Concrete: Interior	HELB/MELB Shielding
Concrete: Interior	Missile Barrier
Concrete: Interior	Shelter, Protection
Concrete: Interior	Shielding
Concrete: Interior	Structural Pressure Boundary
Concrete: Interior	Structural Support
Conduit	Shelter, Protection
Conduit	Structural Support

Component Type	Intended Function
Doors	Flood Barrier
Doors	HELB/MELB Shielding
Doors	Missile Barrier
Doors	Shelter, Protection
Doors	Structural Pressure Boundary
Equipment foundations	Structural Support
Hatches/Plugs	HELB/MELB Shielding
Hatches/Plugs	Missile Barrier
Hatches/Plugs	Shelter, Protection
Hatches/Plugs	Shielding
Hatches/Plugs	Structural Support
Metal decking	Structural Support
Metal panels	HELB/MELB Shielding
Metal panels	Shelter, Protection
Miscellaneous steel (catwalks, stairs, handrails, ladders, vents and louvers, platforms, etc.)	Structural Support
Panels, Racks, Cabinets, and Other Enclosures	Shelter, Protection
Panels, Racks, Cabinets, and Other Enclosures	Structural Support
Penetration bellows (HELB/MELB Shielding)	Flood Barrier
Penetration bellows (HELB/MELB Shielding)	HELB/MELB Shielding
Penetration bellows (HELB/MELB Shielding)	Shelter, Protection
Penetration bellows (HELB/MELB Shielding)	Structural Pressure Boundary
Penetration seals	Flood Barrier
Penetration seals	HELB/MELB Shielding
Penetration seals	Shelter, Protection
Penetration seals	Structural Pressure Boundary
Penetration sleeves	Flood Barrier
Penetration sleeves	HELB/MELB Shielding
Penetration sleeves	Structural Pressure Boundary
Penetration sleeves	Structural Support
Pipe Whip Restraints and Jet Impingement Shields	HELB/MELB Shielding

Component Type	Intended Function
Pipe Whip Restraints and Jet Impingement Shields	Pipe Whip Restraint
Roofing membrane	Shelter, Protection
Seals, gaskets, and moisture barriers (caulking, flashing and other sealants)	Flood Barrier
Seals, gaskets, and moisture barriers (caulking, flashing and other sealants)	HELB/MELB Shielding
Seals, gaskets, and moisture barriers (caulking, flashing and other sealants)	Shelter, Protection
Spent fuel pool gates	Water retaining boundary
Spray Shields	Shelter, Protection
Steel Components: All structural steel	Missile Barrier
Steel Components: All structural steel	Structural Support
Steel Components: Fuel pool liners	Water retaining boundary
Steel Components: Reactor Building dome liner	Structural Pressure Boundary
Steel Components: Reactor Building dome liner	Structural Support
Steel Components: Reactor Well, Dryer and Separator Pool and Cask Loading Pit liners	Water retaining boundary
Steel Components: Refueling bellows (RPV to Drywell and Drywell to Reactor Well)	Water retaining boundary
Steel Components: Skimmer Surge Tank liner	Water retaining boundary
Steel Components: Skimmer Surge Tank screen	Filter
Steel Components: Sump Liners	Structural Support
Steel Components: Sump Liners	Water retaining boundary
Tube Track	Structural Support

The aging management review results for these components are provided in:

Table 3.5.2-8 Reactor Building
Summary of Aging Management Evaluation

2.4.9 Service Water Intake Structures

Structure Purpose

The Service Water Intake Structures include the service water intake structure, service water chemical control building, hypochlorite storage tank dike and foundation, and service water sampling shed.

Service water intake structure:

The service water intake structure is a reinforced concrete and steel structure located west of the Reactor Building, along the western shoreline of the facility and on the east bank of the Delaware River. The service water intake structure is a multi-story structure; approximately 100 feet by 120 feet in plan area, comprised of reinforced concrete foundation mat, slabs, walls and structural steel. The reinforced concrete foundation mat of the structure is founded on lean concrete bearing on dense Vincentown Formation. The roof for the structure is reinforced concrete. The service water intake structure is designed to protect the enclosed Service Water System, Service Water Intake Ventilation System and related vital components under postulated environmental and design basis accidents, and is classified as a seismic Category I structure.

The service water intake structure is divided into four sections. The western portions of these sections are divided into two chambers or pump bays for the service water pumps. Two of the four sections house the service water pumps utilized to draw water out of the river for plant operation. The other two sections of the structure were intended to be utilized for the second unit of the facility, which was not completed and contain no service water pumps. The service water intake structure has trash racks and traveling water screens located on the western side of the structure that filter debris from the incoming flow. The sectional arrangement of the screens and pumps allows the use of steel bulkheads to permit maintenance of equipment without interruption of service water flow to operable equipment.

Ice barriers are provided for the service water intake structure to prevent ice blockage. The ice barriers are positioned in front of the trash racks and consist of structural steel members and treated wood. Their design incorporates marine dock type bumpers to reduce impact load on the structure in the event that barges or ships drift into the vicinity of the intake structure. The collisions of a barge or ship with the intake structure do not have to be considered as a design basis event, therefore the bumpers do not perform a license renewal intended function.

An outdoor gantry crane services the service water intake structure. The crane is supported from the building reinforced concrete within the building envelope and from structural steel frames outside the building boundary. Foundation for the frames consists of reinforced concrete slab on piles. Removal of equipment and materials from the structure is through reinforced concrete hatches on the roof.

The service water intake structure and the Service Water System supply cooling water drawn from the Delaware River for reactor safeguard and auxiliary equipment under all credible design basis events and accidents. The Delaware River is the ultimate heat sink (UHS), required to provide cooling water for emergency shutdown, as well as during normal plant operation.

The purpose of the service water intake structure is to provide river water to dissipate waste heat from the plant during normal, shutdown and accident conditions. The intake structure also provides structural support for pumps and components, which convey the river water to the plant. In addition, the intake structure provides structural support and access to electrical, mechanical, and structural components required to support the function and operation of the Service Water System, Service Water Intake Ventilation System, including the deicing system, steel bulkheads, trash racks, traveling water screens, access platforms, ladders, and stairs.

Service water chemical control building and hypochlorite storage tank dike and foundation:

The service water chemical control building and hypochlorite storage tank dike and foundation are structures located east of the service water intake structure. The service water chemical control building and hypochlorite storage tank dike and foundation are founded on a common reinforced concrete slab on grade. The water chemical control building is a metal prefabricated commercial grade building, approximately 12 feet by 20 feet in plan and houses the equipment used to inject hypochlorite into the Service Water System. The hypochlorite storage tank dike and foundation is a combination reinforced concrete slab and short perimeter walls that provide structural support for the storage tanks that contain the hypochlorite chemical and functions as a fluid retaining basin in case of storage tank leakage or failure. These structures are classified as nonsafety-related and do not perform an intended function for license renewal. The structures are located west of the Reactor Building in the yard, separated from safety-related systems, structures, and components (SSCs) such that their failure would not impact a safety-related function.

Service water sampling shed:

The service water sampling shed is a small structure located in the yard northwest of the Reactor Building. The shed is a metal prefabricated commercial grade building founded on a reinforced concrete slab on grade and is approximately 7 feet by 7 feet in plan. The structure houses the equipment used to sample chemicals in the Service Water System. The structure is classified as nonsafety-related and does not perform an intended function for license renewal. The structure is located in the yard, separated from safety-related systems, structures, and components such that its failure would not impact a safety-related function.

Included in the boundary of the Service Water Intake Structures are components of the service water intake structure, the service water chemical control building and hypochlorite storage tank dike and foundation, and service water sampling shed. Components evaluated in the boundary of the structures include reinforced concrete slabs, walls, foundation, cable trays, concrete anchors, conduit, doors, dikes, hatches/plugs, structural steel, miscellaneous steel, metal siding, metal decking, panels and enclosures, penetration seals and sleeves, piles, tube track, and trash racks.

Components that make up the service water intake structure are in the scope of license renewal except miscellaneous steel (ladders, stairs) on the outside of the structure, and the pump bay steel bulkheads. The miscellaneous steel and the bulkheads are provided for personnel access and to facilitate maintenance of the pumps. The components are not safety-related and their failure would not impact a safety-related function. Thus, the components do not perform an intended function and are not in the scope of license renewal. Refer to the "Components Subject to Aging Management Review" table below for a complete list of components included in the boundary of the Service Water Intake Structures.

Components that make up the service water chemical control building and hypochlorite storage tank dike and foundation, and service water sampling shed are not in the scope of license renewal. The two structures and components in their boundary do not perform a license renewal intended function.

Not included in the boundary of the Service Water Intake Structures are component supports, cranes and hoists and fire barriers. Component supports are separately evaluated with the Component Supports Commodity Group. The cranes and hoists are separately evaluated with Cranes and Hoists and fire barriers are separately evaluated with the Fire Protection System.

Also not included in the boundary of the Service Water Intake Structures are components of the Service Water System, including the traveling water screens, components of the Service Water Intake Ventilation System, and deicing system components. Components for these systems are separately evaluated with the license renewal Service Water System, Service Water Intake Ventilation System, and Circulating Water System.

For more detailed information, see UFSAR Sections 3.1, 3.2, 3.8, and 9.2.1.

Reason for Scope Determination

The Service Water Intake Structures meet 10 CFR 54.4(a)(1) because it is a safety-related structure that is relied upon to remain functional during and following design basis events. It meets 10 CFR 54.4(a)(2) because failure of nonsafety-related portions of the structure could prevent satisfactory accomplishment of function(s) identified for 10 CFR 54.4(a)(1). It also meets 10 CFR 54.4(a)(3) because it provides physical support, shelter and protection for systems, structures and components (SSCs) relied upon in safety analyses or plant evaluations to perform a function that demonstrates compliance with the Commission's regulations for Fire Protection (10 CFR 50.48), and Station Blackout (10 CFR 50.63). The Service Water Intake Structures are not relied upon in any safety analyses or plant evaluations to perform a function that demonstrates compliance with the Commission's regulations for Environmental Qualification (10 CFR 50.49) and Anticipated Transients Without Scram (10 CFR 50.62).

Structure Intended Functions

1. Provides physical support, shelter and protection for safety-related systems, structures, and components. 10 CFR 54.4(a)(1)

2. Provides a source of cooling water for plant safe shutdown. 10 CFR 54.4(a)(1)

3. Provides Ultimate Heat Sink during design basis events. 10 CFR 54.4(a)(1)

4. Provides physical support, shelter and protection for nonsafety-related systems, structures, and components whose failure could prevent satisfactory accomplishment of function(s) identified for 10 CFR 54.4 (a)(1). 10 CFR 54.4(a)(2)

5. Provides physical support, shelter and protection for systems, structures, and components relied upon in safety analyses or plant evaluations to perform a function that demonstrates compliance with the Commission's regulation for Fire Protection (10 CFR 50.48). 10 CFR 54.4(a)(3)

6. Provides physical support, shelter and protection for systems, structures, and components relied upon in safety analyses or plant evaluations to perform a function that demonstrates compliance with the Commission's regulation for Station Blackout (10 CFR 50.63). 10 CFR 54.4(a)(3)

UFSAR References

2.4
2.5
3.1
3.2
3.8
9.2

License Renewal Boundary Drawings

LR-C-0002-0, Sheet 1

Table 2.4-9 **Service Water Intake Structures**
Components Subject to Aging Management Review

Component Type	Intended Function
Bolting (Structural)	Structural Support
Cable Trays	Structural Support
Concrete anchors	Structural Support
Concrete embedments (including Traveling Water Screens support)	Structural Support
Concrete: Above-grade exterior	Flood Barrier
Concrete: Above-grade exterior	Missile Barrier
Concrete: Above-grade exterior	Shelter, Protection
Concrete: Above-grade exterior	Structural Support
Concrete: Below-grade exterior	Flood Barrier
Concrete: Below-grade exterior	Missile Barrier
Concrete: Below-grade exterior	Shelter, Protection
Concrete: Below-grade exterior	Structural Support
Concrete: Foundation	Flood Barrier
Concrete: Foundation	Shelter, Protection
Concrete: Foundation	Structural Support
Concrete: Interior	Direct Flow
Concrete: Interior	Flood Barrier
Concrete: Interior	Missile Barrier
Concrete: Interior	Shelter, Protection
Concrete: Interior	Structural Support
Conduit	Shelter, Protection
Conduit	Structural Support
Doors	Flood Barrier
Doors	Missile Barrier
Doors	Shelter, Protection
Equipment foundations	Structural Support
Hatches/Plugs	Flood Barrier
Hatches/Plugs	Missile Barrier
Hatches/Plugs	Shelter, Protection
Hatches/Plugs	Structural Support
Ice Barrier	Shelter, Protection
Metal decking	Structural Support

Component Type	Intended Function
Miscellaneous steel (catwalks, stairs, handrails, ladders, vents and louvers, platforms, etc.)	Structural Support
Panels, Racks, Cabinets, and Other Enclosures	Shelter, Protection
Panels, Racks, Cabinets, and Other Enclosures	Structural Support
Penetration seals	Flood Barrier
Penetration seals	Shelter, Protection
Penetration sleeves	Flood Barrier
Penetration sleeves	Structural Support
Piles	Structural Support
Seals, gaskets, and moisture barriers (caulking, flashing and other sealants)	Flood Barrier
Seals, gaskets, and moisture barriers (caulking, flashing and other sealants)	Shelter, Protection
Steel components: All structural steel (including trash racks)	Filter
Steel components: All structural steel (including trash racks)	Structural Support
Tube Track	Structural Support

The aging management review results for these components are provided in:

Table 3.5.2-9 Service Water Intake Structures
Summary of Aging Management Evaluation

2.4.10 Shoreline Protection and Dike

Structure Purpose

The Shoreline Protection and Dike, which is also known as the "shoreline protective dike" is a shoreline protective structural feature comprised of cofferdams, steel sheet piles, and rock located at the service water intake structure along the Delaware River shoreline. The original earthen shoreline dike west of the Reactor Building was replaced with sheet pile retaining walls and rock fill construction, extending 100 feet on both sides of the service water intake structure. This section of the Shoreline Protection and Dike is classified nonsafety-related, and seismic Category II/I, to provide protection against shoreline recession during probable maximum hurricane (PMH) surge. An earthen dike continues north of the intake structure sheet pile retaining walls to the barge slip and south to the Salem Generating Station Units 1 and 2 structures.

The shore protection dike includes four 44-foot diameter sheet pile cellular cofferdams, two on each side of the service water intake structure. The cofferdams are filled with course aggregate with the lower part of the backfill pressure grouted.

The purpose of the Shoreline Protection and Dike is to provide protection against shoreline recession for the Service Water System structures and components during and following design seismic and flood (PMH) events. The shoreline protection dike is provided in the vicinity of the service water intake structure to assure surge flooding and wave action will not cause blockage to the water intake or scour of the engineered backfill over the underground service water pipes.

Included in the boundary of the Shoreline Protection and Dike are elements of the dike, sheet piles, rock, and embankments adjacent to the service water intake structure. That portion of the Shoreline Protection and Dike that extends 100 feet on both sides of the service water intake structure performs an intended function and is in the scope of license renewal. The shoreline protection dike sections outside of this boundary do not perform an intended function for license renewal and are not in the scope of license renewal. Refer to the "Components Subject to Aging Management Review" table below for a complete list of components included in the boundary of the Shoreline Protection and Dike.

Not included in the boundary of the Shoreline Protection and Dike are the outer walls of the service water intake structure, which are evaluated with the Service Water Intake Structures.

For more detailed information, see UFSAR Sections 2.4.5, and 2.4.10.

Reason for Scope Determination

The Shoreline Protection and Dike is not in scope under 10 CFR 54.4(a)(1) because no portions of the structure are safety-related or relied upon to remain functional during and following design basis events. It meets 10 CFR 54.4(a)(2) because the structure provides physical support, shelter, and protection for nonsafety-related systems, structures, and components (SSCs) whose failure could prevent satisfactory accomplishment of function(s) identified for 10 CFR 54.4(a)(1). The Shoreline Protection and Dike is not in scope under 10 CFR 54.4(a)(3) because it is not relied upon in safety analyses or plant evaluations to perform

a function that demonstrates compliance with the Commission's regulations for Fire Protection (10 CFR 50.48), Environmental Qualification (10 CFR 50.49), Anticipated Transients Without Scram (10 CFR 50.62) or Station Blackout (10 CFR 50.63).

Structure Intended Functions

1. Provides physical support, shelter, and protection for nonsafety-related systems, structures, and components (SSCs) whose failure could prevent satisfactory accomplishment of function(s) identified for 10 CFR 54.4 (a)(1). 10 CFR 54.4(a)(2)

UFSAR References

2.4.1.1
2.4.5
2.4.10
2.5.1.2.1

License Renewal Boundary Drawings

LR-C-0002-0, Sheet 1

Table 2.4-10 Shoreline Protection and Dike Components Subject to Aging Management Review

Component Type	Intended Function
Earthen water-control structures: Embankments (dikes)	Shelter, Protection
Piles (Sheet Piles)	Shelter, Protection

The aging management review results for these components are provided in:

Table 3.5.2-10 Shoreline Protection and Dike Summary of Aging Management Evaluation

2.4.11 Switchyard

Structure Purpose

The Switchyard is located in a fenced area east of the Reactor Building. It is comprised of the 500-kV switchyard and a control house. The Switchyard foundation consists of reinforced concrete walls, grade beams, and isolated footings bearing on steel piles. The control house is a single story masonry wall structure, approximately 54' x 37' in plan dimensions. Its foundation is reinforced concrete slab on steel piles. Its roof is comprised of a precast prestressed concrete hollow slab covered with insulation and built-up roofing. A reinforced concrete cable underground vault runs under the northern and the eastern sides of the control house. The piles for the Switchyard are composed of steel pipe filled with concrete and protected with a cathodic protection system. The Switchyard is classified nonsafety-related structure and its failure would not impact a safety-related function.

The purpose of the Switchyard is to provide structural support, shelter, and protection for the 13.8 KV Station Power System, and the Offsite 500 KVAC System components and commodities. The Offsite 500 KVAC Power System receives offsite power from three (3) different independent sources and feeds it to the plant through the 13.8 KV Station Power System. The Offsite 500 KVAC Power System also receives power generated by the station and transmits it over three transmission lines to the Public Service Electric & Gas electric transmission network. The 13.8 KV Station Power System and the Offsite 500 KVAC Power System are relied upon to provide offsite power during Station Blackout (SBO) event restoration.

Included in the boundary of the Switchyard are reinforced concrete, and masonry wall components of the structure. Also included in its evaluation boundary are concrete anchors, conduits, embedments, equipment foundations, doors, electrical panels and enclosures, manholes, handholes, and duct banks, metal components, miscellaneous steel, structural bolting, piles, roofing membrane, structural sealants, and transmission towers. Structures and components that provide structural support, shelter, and protection to the in scope 13.8 KV Station Power System, and the Offsite 500 KVAC Power System are in scope of license renewal. Other components and structures in the Switchyard that are not required to support the Station Blackout intended function are not in the scope of license renewal. Refer to the "Components Subject to Aging Management Review" table below for a complete list of components in the boundary of the Switchyard.

Not included in the boundary of the Switchyard are electrical components and commodities. These components and commodities are separately evaluated with the 13.8 KV Station Power System and the Offsite 500 KVAC Power System. Additionally, component supports in the Switchyard are separately evaluated with the Component Supports Commodity Group.

For more detailed information, see UFSAR Sections 1.2.3, 8.1, and 8.2.

Reason for Scope Determination

The Switchyard is not in scope under 10 CFR 54.4(a)(1) because no portions of the structure are safety-related or relied on to remain functional during and following design basis events. It is not in scope under 10 CFR 54.4(a)(2) because failure of nonsafety-related portions of the structure will not prevent satisfactory accomplishment of function(s) identified for 10 CFR

54.4(a)(1). The Switchyard meets 10 CFR 54.4(a)(3) because it is relied upon in the safety analyses or plant evaluations to perform a function that demonstrates compliance with the Commission's regulations for Station Blackout (10 CFR 50.63). The Switchyard is not relied upon in any safety analyses or plant evaluations to perform a function that demonstrates compliance with the Commission's regulation for Fire Protection (10 CFR 50.48), Environmental Qualification (10 CFR 50.49), or Anticipated Transients Without Scram (ATWS) (10 CFR 50.62)

Structure Intended Functions

1. Provides physical support, shelter, and protection for systems, structures and components relied upon in safety analyses or plant evaluations to perform a function that demonstrates compliance with the Commission's regulations for Station Blackout (10 CFR 50.63). 10 CFR 54.4(a)(3).

UFSAR References

1.2.3
1.2.4.4
3.1.2.2.8
8.1
8.2

License Renewal Boundary Drawings

LR-C-0002-0, Sheet 1

Table 2.4-11 Switchyard
Components Subject to Aging Management Review

Component Type	Intended Function
Bolting (Structural)	Structural Support
Concrete anchors	Structural Support
Concrete embedments	Structural Support
Concrete: Above-grade exterior	Shelter, Protection
Concrete: Above-grade exterior	Structural Support
Concrete: Below-grade exterior	Shelter, Protection
Concrete: Below-grade exterior	Structural Support
Concrete: Foundation	Shelter, Protection
Concrete: Foundation	Structural Support
Conduit	Shelter, Protection
Conduit	Structural Support
Doors	Shelter, Protection
Equipment foundations	Structural Support
Manholes, Handholes & Duct Banks	Shelter, Protection
Manholes, Handholes & Duct Banks	Structural Support
Masonry walls: Above-grade exterior	Shelter, Protection
Masonry walls: Above-grade exterior	Structural Support
Metal components: Covers	Shelter, Protection
Miscellaneous steel (catwalks, stairs, handrails, ladders, vents and louvers, platforms, etc.)	Shelter, Protection
Panels, Racks, Cabinets, and Other Enclosures	Shelter, Protection
Panels, Racks, Cabinets, and Other Enclosures	Structural Support
Piles	Structural Support
Roofing membrane	Shelter, Protection
Seals, gaskets, and moisture barriers (caulking, flashing and other sealants)	Shelter, Protection
Transmission towers	Structural Support
Tunnel (Cable Vault)	Shelter, Protection
Tunnel (Cable Vault)	Structural Support

The aging management review results for these components are provided in:

Table 3.5.2-11 Switchyard
Summary of Aging Management Evaluation

2.4.12 Turbine Building

Structure Purpose

The structures included in the boundary of the Turbine Building are the turbine building and the administration facility. The administration facility, formerly the Unit 2 turbine building, is located adjacent to the turbine building and was reconfigured for office and warehouse space. The Turbine Building is a reinforced concrete and steel structure located adjacent to the Auxiliary Building Service/Radwaste Area, and east of the Reactor Building. The building is a multi-story structure; approximately 630 feet by 195 feet in plan area, comprised of reinforced concrete walls, slabs, foundation mats, and structural steel. The above ground exterior walls are pre-cast concrete panels and insulated metal siding. The roof is cellular metal deck, insulation board and built-up roofing material supported by structural steel. The building foundation consists of reinforced concrete mats placed on engineered structural backfill that bears on the dense Vincentown Formation. Seismic joints separate the foundation mats and building walls of the turbine building, the administration facility and the abutting Auxiliary Building Service/Radwaste Area. The Turbine Building is classified nonsafety-related, non-seismic Category I, designed not to collapse and adversely impact the structural integrity of any seismic Category I structures.

Turbine building:

The turbine building encloses the steam and power conversion system and turbine auxiliary systems, reactor protection system components, and supporting systems. Major components within the building include the main turbine generator, main condensers, air ejectors, moisture separators, feedwater heaters, feed and condensate pumps, condensate demineralizers, main steam control and stop valves, and their associated piping. Radioactive components are enclosed within heavy concrete walls with labyrinth entrances for shielding purposes. Some interior walls, required for separation, radiation shielding, or fire protection, are constructed of fully grouted, reinforced concrete masonry units. The building also houses other nonsafety-related electrical and mechanical equipment and components such as the, motor generator sets for reactor recirculation pumps, condensate storage and transfer pumps, the demineralizer system, HVAC equipment, electrical equipment and components, instrumentation and their enclosures as applicable. Two 220 ton overhead cranes are provided above the turbine generator operating floor to service the turbine generator unit. The turbine generator operating floor has a large lay down area that was originally intended for the Unit 2 turbine, and the cranes travel along common rails into the administration facility storage area. The turbine generator is supported by a free standing, reinforced concrete pedestal founded on a reinforced concrete mat foundation and the pedestal extends to the operating floor. The operating floor framing is supported on slide bearings that are in turn supported by the pedestal. Separation joints are provided between the pedestal and walls and other turbine building floors to prevent transfer of turbine vibration to the building.

Administration facility:

The administration facility contains office, warehouse, and unoccupied space, or empty rooms from the Unit 2 plant cancelled areas. The old Unit 2 turbine generator operating floor and lay down area is a common storage area with the turbine building generator-operating floor. The administration facility first (grade level) and second floors were reconfigured for office space, conference rooms, a cafeteria and supporting facilities that have no safety-related function.

There are several stairways, two elevators, and grade level truck rollup doors, which allow movement within the Turbine Building and access to the equipment and storage areas.

Reactor Protection System (RPS) sensors are mounted on the turbine to monitor first stage pressure, main control valve fast closure, and stop valve closure and on the main condenser to measure condenser vacuum. This safety-related equipment is located in the Turbine Building. The sensors are safety-related, however, they are physically mounted on equipment that is not seismic Category I, and are located in the Turbine Building, which is not a seismic Category I structure. The RPS is a failsafe design, with other diverse safety-related reactor scram signals such that no single failure or credible natural disaster can prevent a reactor scram. Therefore, failure of the turbine components or structure will not result in a failure of the RPS to attain its failsafe state and scram the reactor. This system is evaluated with the Reactor Protection System.

The purpose of the Turbine Building is to provide structural support, shelter, and protection for systems, components and structures classified as safety and nonsafety-related. The safety-related components housed within the Turbine Building are fail-safe by design and failure of nonsafety-related systems, structures, and components cannot prevent the accomplishment of the safety-related intended function. The building is designed not to collapse and adversely impact the structural integrity of adjacent seismic Category I structures. Structural support, shelter, and protection are provided to systems and components necessary to support fire protection, station blackout, environmental qualification, and anticipated transients without scram. The Turbine Building houses the Main Condenser System to provide for post accident containment and holdup. The Turbine Building also provides shielding from radiation exposure to allow personnel access for operating and maintaining equipment. The turbine building design features provide a ventilation system to maintain the building at a slight negative pressure and prevent the unmonitored release of radioactivity. The turbine building ventilation system is evaluated with the Miscellaneous Ventilation Systems.

Included in the boundary of the Turbine Building are concrete elements of the building, concrete embedments and anchors, bolting, cable trays, doors, hatches, compressible joints and seals, conduit, racks, enclosures, steel components, metal decking and siding, miscellaneous steel, penetration seals, penetration sleeves, roofing membrane, and tube track. Structural elements of the building essential for structural support, shelter, and protection for components credited for fire protection, station blackout, environmental qualification, and anticipated transients without scram are also included in the scope of license renewal. Internal structures that do not perform or support intended functions, such as slide bearings, office facilities, partitions, stairs and platforms, are not included in the scope of license renewal. Refer to the "Components Subject to Aging Management Review" table below for a complete list of components included in the boundary of the Turbine Building.

Not included in the boundary of the Turbine Building are component supports, cranes, elevators, piping and component insulation and fire barriers. Component supports are separately evaluated with the Component Supports Commodity Group, the cranes are evaluated with the Cranes and Hoists and fire barriers are evaluated with the Fire Protection license renewal systems. The building elevators are evaluated with the Elevators and Manlifts and piping and component insulation are evaluated separately with the Piping and Component Insulation Commodity Group.

For more detailed information, see UFSAR Sections 3.8.4.1.7, and 7.2.

Reason for Scope Determination

The Turbine Building is not in scope under 10 CFR 54.4(a)(1) because no portions of the structure are safety-related or relied upon to remain functional during and following design basis events. It meets 10 CFR 54.4(a)(2) because the structure provides physical support, shelter, and protection for nonsafety-related systems, structures, and components (SSCs) whose failure could prevent satisfactory accomplishment of function(s) identified for 10 CFR 54.4(a)(1). It also meets 10 CFR 54.4(a)(3) because it provides physical support, shelter and protection for systems, structures and components (SSCs) relied upon in safety analyses or plant evaluations to perform a function that demonstrates compliance with the Commission's regulations for Fire Protection (10 CFR 50.48), Environmental Qualification (10 CFR 50.49), Anticipated Transients Without Scram (10 CFR 50.62) and Station Blackout (10 CFR 50.63).

Structure Intended Functions

1. Provides physical support, shelter, and protection for nonsafety-related systems, structures, and components (SSCs) whose failure could prevent satisfactory accomplishment of function(s) identified for 10 CFR 54.4 (a)(1). 10 CFR 54.4(a)(2)

2. Provides physical support, shelter and protection for systems, structures, and components relied upon in safety analyses or plant evaluations to perform a function that demonstrates compliance with the Commission's regulation for Fire Protection (10 CFR 50.48). 10 CFR 54.4(a)(3)

3. Provides physical support, shelter and protection for systems, structures, and components relied upon in safety analyses or plant evaluations to perform a function that demonstrates compliance with the Commission's regulation for Environmental Qualification (10 CFR 50.49). 10 CFR 54.4(a)(3)

4. Provides physical support, shelter, and protection for systems, structures, and components relied upon in safety analyses or plant evaluations to perform a function that demonstrates compliance with the Commission's regulations for Anticipated Transient without Scram (10 CFR 50.62). 10 CFR 54.4(a)(3)

5. Provides physical support, shelter, and protection for systems structures and components relied upon in safety analyses or plant evaluations to perform a function that demonstrates compliance with the Commission's regulations for Station Blackout (10 CFR 50.63). 10 CFR 54.4(a)(3)

UFSAR References

1.2.3
3.2
3.8
7.2
10.4

License Renewal Boundary Drawings

LR-C-0002-0, Sheet 1

Table 2.4-12 Turbine Building
Components Subject to Aging Management Review

Component Type	Intended Function
Bolting (Structural)	Structural Support
Cable Trays	Structural Support
Compressible Joints and Seals (Seismic Gaps)	Expansion / Separation
Concrete anchors	Structural Support
Concrete embedments	Structural Support
Concrete: Above-grade exterior	Shelter, Protection
Concrete: Above-grade exterior	Structural Support
Concrete: Below-grade exterior	Shelter, Protection
Concrete: Below-grade exterior	Structural Support
Concrete: Foundation	Shelter, Protection
Concrete: Foundation	Structural Support
Concrete: Interior	Shelter, Protection
Concrete: Interior	Shielding
Concrete: Interior	Structural Support
Conduit	Shelter, Protection
Conduit	Structural Support
Doors	Shelter, Protection
Equipment foundations	Structural Support
Hatches/Plugs	Shelter, Protection
Hatches/Plugs	Shielding
Hatches/Plugs	Structural Support
Masonry walls: Interior	Shelter, Protection
Masonry walls: Interior	Shielding
Masonry walls: Interior	Structural Support
Metal decking	Shelter, Protection
Metal decking	Structural Support
Metal siding	Shelter, Protection
Miscellaneous steel (catwalks, stairs, handrails, ladders, vents and louvers, platforms, etc.)	Structural Support
Panels, Racks, Cabinets, and Other Enclosures	Shelter, Protection
Panels, Racks, Cabinets, and Other Enclosures	Structural Support

Component Type	Intended Function
Penetration seals	Shelter, Protection
Penetration sleeves	Structural Support
Precast Panels	Shelter, Protection
Precast Panels	Structural Support
Roofing membrane	Shelter, Protection
Seals, gaskets, and moisture barriers (caulking, flashing and other sealants)	Shelter, Protection
Steel components: All structural steel	Structural Support
Tube Track	Structural Support

The aging management review results for these components are provided in:

Table 3.5.2-12 Turbine Building
Summary of Aging Management Evaluation

2.4.13 Yard Structures

Structure Purpose

The Yard Structures include the compressed gas storage areas, concrete box valve pits, condensate storage tank dike and foundation, fire water tank foundations, light poles, manholes, handholes and duct banks, miscellaneous yard structures, transformer foundations, transmission towers and foundations, trenches, and yard drainage catch basins and ditch.

Compressed gas storage areas:

Compressed gas storage areas are comprised of the carbon dioxide storage facility, hydrogen storage facility, liquid oxygen storage facility, and nitrogen storage facility. The compressed gas storage areas are reinforced concrete slab foundations on grade facilities that are enclosed with a chain link fence or concrete barriers, and located in the yard area. The compressed gas storage areas are nonsafety-related and separated from safety-related systems, structures, and components such that their failure would not impact a safety-related function. The compressed gas storage areas do not perform an intended function and are not in scope for license renewal.

Concrete box valve pits:

The concrete box valve pits are located in the yard area and are buried below plant grade with a removable concrete panel on top. There are access opening in the concrete panels with covers to allow personnel access into the valve pits. The valve pits contain nonsafety-related piping and valves for not in scope plant water systems, including the Circulating Water System and the not in scope portion of Service Water System. The concrete valve pits are located at grade level and below. They are separated from safety-related systems, structures, and components, except for valve pits 4 and 5, such that their failure would not impact a safety-related function. Valve pits 4 and 5 are located adjacent to the west wall of the unit 1 Reactor Building and failure of these valve pits and enclosed components would not affect the license renewal intended functions of the Reactor Building or enclosed mechanical piping system. The reinforced concrete box valve pits do not perform an intended function and are not in scope for license renewal.

Condensate storage tank dike and foundation:

The condensate storage tank dike and foundation is a reinforced concrete structure located south of the Reactor Building. The structure has a 2 feet thick rectangular reinforced concrete foundation slab with the top of the slab approximately 9 feet below plant grade. The reinforced concrete foundation slab of the structure is founded on lean concrete bearing on dense Vincentown Formation. An octagonal reinforced concrete slab, approximately 2 feet thick, is cast on the foundation slab and functions as the foundation pedestal for the condensate storage tank. There are 2 feet thick reinforced concrete walls, approximately 20 feet in height, along the edge of the foundation slab that forms an open top box structure. The structure has been sized to contain any spillage due to failure of the condensate storage tank. A reinforced concrete valve pit is located on the east side of the condensate storage tank dike. This valve pit is a rectangular open top box structure similar to the condensate storage tank dike, with the perimeter walls extending approximately one foot above plant grade and with grating over the open top. The condensate storage tank dike and foundation is classified as a seismic

Category I structure. The condensate storage tank dike and foundation perform license renewal intended functions and is in scope for license renewal.

Fire water tank foundations:

The fire water tank foundations are two octagonal reinforced concrete slabs on grade and are approximately 3 feet thick. The tank foundations are located north of the Reactor Building in the yard, separated from safety-related systems, structures, and components (SSCs) such that their failure would not impact a safety-related function. There is a reinforced concrete valve pit located on the south end of each tank foundation and they extend approximately 6 feet under the tank foundation. The valve pit is a rectangular box structure with perimeter walls extending approximately one foot above plant grade and a foundation slab approximately 10 feet below plant grade. There is a reinforced concrete slab that serves as a roof over the valve pit, with an opening with a manhole cover for personnel access. The valve pit foundation consists of a reinforced concrete slab with piles under the perimeter walls. The fire water tank foundations perform an intended function and are in scope for license renewal.

Light Poles:

Light poles are metal poles that are mounted on concrete pier foundations located in the yard area. The light poles provide area lighting for safe movement of personnel and for security surveillance and are classified as nonsafety-related. Light poles do not perform an intended function and are not in scope for license renewal.

Manholes, handholes and duct banks:

Manholes and handholes consist of reinforced concrete rectangular box structures buried underground with a reinforced concrete panel on top. The manholes have an opening and cover to allow plant personnel access to electrical cables routed in duct banks. Manholes and handholes serve as intermediate connection point(s) of duct banks routed in the yard area. There are safety-related and nonsafety-related manholes located in the yard area. Manhole covers are provided at the openings for shelter and protection.

Duct banks are comprised of the placement of multiple raceways in an excavated trench in the yard that are encased in concrete and then backfilled with soil or engineered compacted backfill. The duct banks are used to route nonsafety-related and safety-related cables between structures and in the switchyard area. Safety-related duct banks that are buried shallow in the yard are provided with a reinforced concrete protection slab that is cast over the duct bank for missile protection.

Manholes, handholes, and duct banks perform an intended function and are in scope for license renewal.

Miscellaneous yard structures:

Miscellaneous yard structures are comprised of civil features located in the yard area that are not uniquely tied to a group of common structures in the yard. These miscellaneous yard structures include roadways, sidewalks, fences, bollards, lift stations, reinforced concrete foundation slabs for buildings that have been removed from the site, concrete pads for commercial grade HVAC units for office buildings, abandoned concrete equipment foundations, plant security shooting range and facility complex, and miscellaneous yard sheds

and foundations. The miscellaneous yard structures are nonsafety-related and separated from safety-related systems, structures, and components such that their failure would not impact a safety-related function. The miscellaneous yard structures do not perform an intended function and are not in scope for license renewal.

Transformer foundations:

Transformer foundations are reinforced concrete slabs that provide structural support for station transformers located in the yard area. The foundations can be concrete slabs on grade, concrete slabs that are cast on a subgrade foundation several feet below grade or on piles with perimeter walls with a pedestal type concrete equipment pad on the foundation slab that provides the structural support for the transformer. Transformer foundations are classified as nonsafety-related and do not perform a safety-related function. There are transformers that are required to support Station Blackout restoration and therefore those foundations are in scope for license renewal.

Transmission towers and foundations:

Transmission towers and foundations are tall steel tower structures that are supported on reinforced concrete pier foundations located in the yard area. The transmission towers are located between the Hope Creek Generating Station (HCGS) Switchyard and the Salem Generating Station (SGS) Switchyard. These transmission towers support the 500 kV power lines that are routed between the HCGS and SGS switchyards. Transmission towers and foundations are classified as nonsafety-related and do not perform a safety-related function. These transmission towers are required to support the Station Blackout restoration function and therefore are in scope for license renewal.

Trenches:

Trenches are reinforced concrete rectangular box structures with open tops that are buried in excavated trenches in the yard area, with either metal grating or metal plate covering the open tops. The trenches are used to route piping and components for not in scope plant systems. The top of the trenches are located at approximately 6 inches above plant grade with the remaining portion of the trenches below grade such that their failure would not impact a safety-related function. The trenches do not perform an intended function and are not in scope for license renewal.

Yard drainage catch basins and ditch:

Yard drainage catch basins are reinforced concrete box structures that are buried in the yard, with an open top with slotted grating. The yard ditch is an open channel earthen feature located along the north boundary of the station's property. These features are provided to drain the station's yard area during normal and severe rainstorms. The yard drainage catch basins and ditch do not perform an intended function and are not in scope for license renewal.

The purpose of the Yard Structures is to provide structural support, shelter, and protection for safety-related and nonsafety-related components and commodities, including components credited for station blackout (SBO) and fire protection (FP). In addition, the condensate storage tank dike and foundation protects against uncontrolled release of condensate water to the environment. Other functions of the Yard Structures include drainage of the yard area, lighting, and personnel and vehicular access throughout the yard area.

Included the boundary of the Yard Structures are components that makeup compressed gas storage areas, concrete box valve pits, condensate storage tank dike and foundation, fire water tank foundations, light poles, manholes, handholes and duct banks, miscellaneous yard structures, transformer foundations, transmission towers and foundations, trenches, and yard drainage catch basins and ditch. Components of the condensate storage tank dike and foundation, fire water tank foundations, manholes, handholes and duct banks that contain electrical commodities in the scope of license renewal, SBO transformer foundations, and SBO transmission towers and foundations are in scope for license renewal. The components include bolting, bus ducts, cable trays, conduits, reinforced concrete, concrete anchors, concrete embedments, equipment foundations, hatches/plugs, miscellaneous steel, racks, panels and enclosures, manholes, handholes and duct banks, penetration sleeves, seals and bellows, seals and gaskets, and transmission towers. Refer to the "Components Subject to Aging Management Review" table below for a complete list of components included in the boundary of Yard Structures.

Not included in the boundary of the Yard Structures are component supports, piping and component insulation and Switchyard components. Component supports are separately evaluated with the Component Supports Commodity Group. The piping and component insulation is evaluated with the Piping and Component Insulation Commodity Group. The components in the Switchyard are evaluated with the Switchyard Structures.

For more detailed information, see UFSAR Sections 3.4.1.1 and 3.8.4.

Reason for Scope Determination

The Yard Structures meet 10 CFR 54.4(a)(1) because there are safety-related structures that are relied upon to remain functional during and following design basis events. They meet 10 CFR 54.4(a)(2) because failure of nonsafety-related portions of the structures could prevent satisfactory accomplishment of function(s) identified for 10 CFR 54.4(a)(1). They also meet 10 CFR 54.4(a)(3) because the structures provide physical support, shelter and protection for systems, structures and components (SSCs) relied upon in safety analyses or plant evaluations to perform a function that demonstrates compliance with the Commission's regulations for Fire Protection (10 CFR 50.48) and Station Blackout (10 CFR 50.63). The Yard Structures are not relied upon in any safety analyses or plant evaluations to perform a function that demonstrates compliance with the Commission's regulations for Environmental Qualification (10 CFR 50.49) and Anticipated Transients Without Scram (10 CFR 50.62).

Structure Intended Functions

1. Provides physical support, shelter and protection for safety-related systems, structures, and components (SSCs). 10 CFR 54.4(a)(1)

2. Prevent liquid radioactive waste from being released to the environment in the event of a Safe Shutdown Earthquake (SSE). 10 CFR 54.4(a)(1)

3. Provides physical support, shelter and protection for nonsafety-related systems, structures, and components whose failure could prevent satisfactory accomplishment of function(s) identified for 10 CFR 54.4 (a)(1). 10 CFR 54.4(a)(2)

4. Provides physical support, shelter and protection for systems, structures, and components relied upon in safety analyses or plant evaluations to perform a function that demonstrates compliance with the Commission's regulation for Fire Protection (10 CFR 50.48). 10 CFR 54.4(a)(3)

5. Provides physical support, shelter and protection for systems, structures, and components relied upon in safety analyses or plant evaluations to perform a function that demonstrates compliance with the Commission's regulation for Station Blackout (10 CFR 50.63). 10 CFR 54.4(a)(3)

UFSAR References

1.2.4.3.10
2.4.2.3
2.4.13.3
2.5.4.10.2
3.4.1.1
Table 3.4-4
3.8.4
3.8.4.1.6
9.2.6
9.5.1.2.34
9.5.9.2

License Renewal Boundary Drawings

LR-C-0002-0, Sheet 1

Table 2.4-13 **Yard Structures**
Components Subject to Aging Management Review

Component Type	Intended Function
Bolting (Structural)	Structural Support
Cable Trays	Structural Support
Concrete Anchors	Structural Support
Concrete Embedments	Structural Support
Concrete: Above-grade exterior	Shelter, Protection
Concrete: Above-grade exterior	Structural Support
Concrete: Above-grade exterior	Water retaining boundary
Concrete: Below-grade exterior	Missile Barrier
Concrete: Below-grade exterior	Shelter, Protection
Concrete: Below-grade exterior	Structural Support
Concrete: Below-grade exterior	Water retaining boundary
Concrete: Foundation	Shelter, Protection
Concrete: Foundation	Structural Support
Concrete: Foundation	Water retaining boundary
Conduit	Shelter, Protection
Conduit	Structural Support
Equipment foundations	Structural Support
Hatches/Plugs (Manhole and Handhole covers)	Missile Barrier
Hatches/Plugs (Manhole and Handhole covers)	Shelter, Protection
Manholes, Handholes & Duct banks	Missile Barrier
Manholes, Handholes & Duct banks	Shelter, Protection
Manholes, Handholes & Duct banks	Structural Support
Miscellaneous steel (catwalks, stairs, handrails, ladders, vents and louvers, platforms, etc.)	Structural Support
Panels, Racks, Cabinets, and Other Enclosures	Shelter, Protection
Penetration bellows (Condensate Storage Tank Dike)	Shelter, Protection
Penetration bellows (Condensate Storage Tank Dike)	Water retaining boundary
Penetration seals	Shelter, Protection
Penetration seals	Water retaining boundary
Penetration sleeves	Shelter, Protection

Component Type	Intended Function
Piles	Structural Support
Seals, gaskets, and moisture barriers (caulking, flashing and other sealants)	Shelter, Protection
Steel Components: Bus Duct	Shelter, Protection
Steel Components: Bus Duct	Structural Support
Transmission towers	Structural Support

The aging management review results for these components are provided in:

Table 3.5.2-13 Yard Structures
Summary of Aging Management Evaluation

2.5 SCOPING AND SCREENING RESULTS: ELECTRICAL AND INSTRUMENTATION AND CONTROLS (I&C) SYSTEMS

The determination of electrical systems that fall within the scope of license renewal is made through the application of the process described in Section 2.1. The results of the electrical systems scoping review are contained in Section 2.2.

Subsection 2.1.6.1 provides the screening methodology for determining which component/commodity groups within the scope of 10 CFR 54.4 meet the requirements contained in 10 CFR 54.21(a)(1). The component/commodity groups that meet those screening requirements are identified in this section. These identified component/commodity groups consequently require an aging management review.

As described in Subsection 2.1.6.1, the screening for electrical and I&C components was performed on a commodity group basis for the in-scope electrical and I&C systems as well as the electrical and I&C component types associated with in-scope mechanical systems listed in Table 2.2-1.

Components which support or interface with electrical and I&C components, for example, cable trays, conduits, instrument racks, panels and enclosures, are assessed as part of the Structural Component Support Commodity Group in Section 2.4.4.

2.5.1 ELECTRICAL/I&C COMPONENT COMMODITY GROUPS

After identifying passive commodity groups in accordance with the guidance of NEI 95-10, commodity groups that are subject to periodic replacement were also screened out. Commodity groups were then evaluated to identify whether specific commodity groups perform a license renewal intended function, thus determining whether they are subject to aging management review.

UFSAR References

Additional system details are included in the UFSAR Sections 7 and 8.

Evaluation Boundaries

In addition to the plant electrical and I&C components, certain Switchyard components required to restore offsite power following a station blackout (SBO) were included within the scope of license renewal. The evaluation boundaries of the offsite power system are described below.

The purpose of the offsite power system and Switchyard is to provide the electrical interconnection between Hope Creek and the offsite transmission network. Restoration is defined as the re-powering of the plant AC distribution system from offsite sources and/or on site emergency AC sources. For Hope Creek, this includes the portion of the plant electrical system used to connect the in-scope AC distribution system equipment to offsite power and by definition

recover from an SBO event. For Hope Creek, the boundary between the offsite transmission network and the plant electrical distribution system has been defined at six 500 kV switchyard circuit breakers: breakers 30X and 31X (Salem), 50X and 51X (New Freedom), and 60X and 61X (Red Lion). Long-lived passive electrical commodities included in the scope of license renewal on the plant side of this boundary are: switchyard bus and connections, transmission conductors and connections, high voltage insulators, substation structures and supports, inaccessible medium voltage cables, metal enclosed bus, insulated cables and connections, and cable connections (metallic parts).

A simplified diagram of the SBO recovery path and the key plant electrical distribution systems is shown in Figure 2.1-2.

2.5.2 ELECTRICAL COMPONENT COMMODITY GROUPS

2.5.2.1 Identification of Electrical Component Commodity Groups

The first step of the screening process for electrical component commodity groups is to use plant documentation to identify the electrical components within the electrical, I&C and mechanical systems based on plant design documentation, drawings, and the Component Data Module (SAP CDM), as well as by interfacing with the parallel mechanical and civil screening efforts. The electrical component commodity groups identified at Hope Creek are listed below. This list includes electrical commodity groups identified in NEI 95-10 Appendix B in addition to commodity groups added per NUREG-1800 Table 2.1-5, the EPRI License Renewal Electrical Handbook or unique to Hope Creek.

Electrical Component Commodity Groups for In-Scope Systems:

- Alarm Units
- Analyzers
- Annunciators
- Batteries
- Cable Connections – Metallic Parts
- Cable Tie-Wraps
- Chargers
- Circuit Breakers
- Communication Equipment
- Connection Contacts
- Converters
- Electric Heaters
- Electrical Controls and Panel Internal Assemblies
- Electrical Penetrations
- Elements, RTDs, Sensors, Themocouples, Transducers
- Fuse Holders
- Fuses
- Generators, Motors
- Heat Trace
- High Voltage Insulators
- Indicators
- Insulated Cables and Connections
- Inverters
- Isolators
- Light Bulbs
- Loop Controllers
- Metal Enclosed Bus
- Meters
- Motor Generator Sets
- Power Supplies
- Radiation Monitors
- Recorders
- Regulators
- Relays (and Bistables)
- Signal Conditioners

- Solenoid Operators
- Solid State Devices
- Splices
- Surge Arresters
- Switches
- Switchgear, Load Centers, Motor Control Centers, Distribution Panel Internal Component Assemblies
- Switchyard Bus and Connections
- Terminal Blocks
- Transformers
- Transmission Conductors and Connections
- Transmitters
- Uninsulated Ground Conductors

2.5.2.2 Application of Screening Criterion 10 CFR 54.21 (a)(1)(i) to the Electrical Component Commodity Groups

Following the identification of the electrical commodity groups, the criteria of 10 CFR 54.21 (a)(1)(i) were applied to identify commodity groups that perform their functions without moving parts or without a change in configuration or properties. The following electrical commodity groups were determined to meet the screening criteria of 10 CFR 54.21 (a)(1)(i):

- Cable Connections - Metallic Parts
- Cable Tie-Wraps
- Electrical Equipment Subject to 10 CFR 50.49 Environmental Qualification Requirements
- Electrical Penetrations
- Fuse Holders
- High Voltage Insulators
- Insulated Cables and Connections
- Metal Enclosed Bus
- Splices
- Switchyard Bus and Connections
- Terminal Blocks
- Transmission Conductors and Connections
- Uninsulated Ground Conductors

2.5.2.3 Elimination of Electrical Component Commodity Groups With No License Renewal Intended Functions

The following electrical commodity group was determined to not have a license renewal intended function:

<u>Cable Tie-Wraps</u>

Tie-wraps are used in cable installations as cable ties. Cable ties hold groups of cables together for restraint and ease of maintenance. Cable ties are used to bundle wires and cables together to keep the wire and cable runs neat and orderly. Cable ties are used to restrain wires and cables within raceways to facilitate cable installation. There are no current license basis requirements for

Hope Creek that tie-wraps remain functional during and following design basis events. Cable ties are not credited for maintaining cable ampacity, ensuring maintenance of cable minimum bending radius, or maintaining cables within vertical raceways at Hope Creek. The seismic qualification of cable trays does not credit the use of cable ties. Tie-wraps are not credited in the Hope Creek design basis in terms of any 10 CFR 54.4 intended function. Therefore, cable tie-wraps are not within the scope of license renewal and are not subject to aging management review.

Uninsulated Ground Conductors

The Uninsulated Ground Conductors commodity group is comprised of grounding cable and associated connectors. Ground conductors are provided for equipment and personnel protection. They do not perform an intended function for license renewal. Therefore, Uninsulated Ground Conductors are not subject to aging management review.

2.5.2.4 Application of Screening Criterion 10 CFR 54.21 (a)(1)(ii) to Electrical Component Commodity Groups

The 10 CFR 54.21 (a)(1)(ii) screening criterion was applied to the specific commodity groups that remained following application of the 10 CFR 54.21 (a)(1)(i) criterion. 10 CFR 54.21 (a)(1)(ii) allows the exclusion of those commodity groups that are subject to replacement based on a qualified life or specified time period. The only electrical commodity groups identified for exclusion by the criteria of 10 CFR 54.21 (a)(1)(ii) are electrical and I&C components included in the Hope Creek Environmental Qualification (EQ) Program. This is because electrical and I&C components included in the EQ Program have defined qualified lives and are replaced prior to the expiration of their qualified lives. No electrical and I&C components within the Hope Creek EQ Program are subject to aging management review in accordance with the screening criteria of 10 CFR 54.21 (a)(1)(ii). See Section 4.4 for the TLAA evaluation of the Hope Creek EQ Program. The remaining commodity groups, all or part of which are not in the EQ Program, require aging management review and are discussed below.

2.5.2.5 Electrical Component Commodity Groups Subject to Aging Management Review

The electrical component commodity groups subject to aging management review are identified in Table 2.5.2-1, along with the associated intended functions. These electrical component commodity groups are further described below.

2.5.2.5.1 Cable Connections - Metallic Parts

The Cable Connectors (Metallic Parts) commodity group includes metallic portions of cable connections that are not included in the EQ Program. The metallic connections evaluated include splices, threaded connectors, compression type termination lugs, and terminal blocks. Therefore, Cable

Connections (Metallic Parts) meet the screening criterion of 10 CFR 54.21(a)(1)(ii) and are subject to aging management review.

2.5.2.5.2 Electrical Penetrations

Environmentally qualified electrical penetrations are managed under the Environmental Qualification Program, which is evaluated as a time-limited aging analysis. The electrical continuity of the non-environmentally qualified electrical penetrations is managed under the Electrical Cables and Connections Not Subject to 10 CFR 50.49 Environmental Qualification Requirements program. The pressure boundary function of electrical penetrations is included in Section 2.4.7, Primary Containment.

2.5.2.5.3 Fuse Holders

The Fuse Holder commodity group includes fuse holders that are not part of a larger active assembly and are not included in the EQ Program. Both metallic and non-metallic portions of fuse holders that are not part of a larger active assembly and are not included in the EQ Program meet the screening criterion of 10 CFR 54.21(a)(1)(ii) and are subject to aging management review. Insulating portions of fuse holders are evaluated with insulated cables and connections (Section 2.5.2.5.1).

2.5.2.5.4 High Voltage Insulators

The High Voltage Insulators commodity group supports a portion of the circuits that supply power from the electric utility transmission system and Switchyard to plant buses, to power in-scope license renewal components used for recovery from a station blackout event. High Voltage Insulators are not included in the EQ program. Therefore, High Voltage Insulators meet the screening criterion of 10 CFR 54.21(a)(1)(ii) and are subject to an aging management review.

2.5.2.5.5 Insulated Cables and Connections

The insulated cables and connections commodity group was separated for aging management review into subcategories based on their treatment in NUREG-1801:

- Insulated Cables and Connections
- Insulated Cables and Connections Used in Instrumentation Circuits
- Insulated Inaccessible Medium-Voltage Cables

Insulated cables and connections included in this review are:

- Electrical Penetration Pigtails
- Splices
- Terminal Blocks
- Insulating Portions of Fuse Holders

Numerous insulated cables and connections are included in the EQ Program and, therefore, are not subject to an aging management review in accordance with the screening criteria of 10 CFR 54.21 (a)(1)(ii). Insulated cables and

connections not included in the EQ Program meet the criterion of 10 CFR 54.21(a)(1)(ii) and are subject to an aging management review.

Insulated cables and connections inside the enclosure of an active device (e.g., motor leads and connections, cables and connections internal to relays, chargers, switchgear, transformers, power supplies) are maintained along with the other subcomponents inside the enclosure and are not subject to an aging management review.

2.5.2.5.6 Metal Enclosed Bus

The Metal Enclosed Bus commodity group distributes 4.16 kV power from the Station Service Transformers 1AX501 and 1BX501 to the 4.16 kV Class 1E switchgear utilizing non-segregated bus work. These portions of the power distribution system are in the scope of license renewal and supply electrical power from the switchyard to plant buses to power in-scope license renewal components for recovery from a station blackout event. Therefore, metal enclosed bus meets the screening criterion of 10 CFR 54.21(a)(1)(ii) and is subject to aging management review.

2.5.2.5.7 Switchyard Bus and Connections, Transmission Conductors and Connections

The Switchyard Bus and Connections commodity group forms a portion of the circuits that supply power from the electrical utility grid to plant buses to power in scope license renewal components used for recovery from a station blackout. The Switchyard Bus and Connections are not included in the EQ program. Therefore, Switchyard Bus and Connections meet the screening criterion of 10 CFR 54.21(a)(1)(ii) and are subject to an aging management review.

The Transmission Conductors and Connections commodity group forms a portion of the circuits that supply power from the electric utility grid to plant buses to power in-scope license renewal components used for recovery from a station blackout. The Transmission Conductors and Connections are not included in the EQ program. Therefore, Transmission Conductors and Connections meet the screening criterion of 10 CFR 54.21(a)(1)(ii) and are subject to an aging management review.

Table 2.5.2-1 Electrical Component Commodity Groups Subject to Aging Management Review

Component Type	Intended Functions
Cable Connections - Metallic Parts	Electrical Continuity
Fuse Holders	Electrical Continuity
High Voltage Insulators	Insulation - Electrical
Insulated Cables and Connections	Electrical Continuity
Metal Enclosed Bus	Electrical Continuity
	Insulation - Electrical
	Shelter, Protection
Switchyard Bus and Connections	Electrical Continuity
Transmission Conductors and Connections	Electrical Continuity

The aging management review results for these components are provided in Table 3.6.2-1, Electrical Commodity Groups – Summary of Aging Management Evaluation.

3.0 AGING MANAGEMENT REVIEW RESULTS

This section provides the results of the aging management review for those structures and components identified in Section 2.0 as being subject to aging management review.

Descriptions of the internal and external service environments that were used in the aging management review to determine aging effects requiring management are included in Table 3.0-1, Hope Creek Internal Service Environments and Table 3.0-2, Hope Creek External Service Environments. The environments used in the aging management reviews are listed in the Environment column. The third column identifies one or more of the NUREG-1801 Volume 2 environments that were used when comparing the Hope Creek Aging Management Review results to the NUREG-1801 results.

Most of the Aging Management Review (AMR) results information in Section 3 is presented in the following two tables:

- **Table 3.x.1** - where '3' indicates the LRA section number, 'x' indicates the subsection number from NUREG 1801, Volume 1, and '1' indicates that this is the first table type in Section 3. For example, in the Reactor Vessel, Internals, and Reactor Coolant System subsection, this table would be number 3.1.1, in the Engineered Safety Features subsection, this table would be 3.2.1, and so on. For ease of discussion, this table will hereafter be referred to in this Section as "Table 1."

- **Table 3.x.2-y** - where '3' indicates the LRA section number, 'x' indicates the subsection number from NUREG-1801, Volume 1, and '2' indicates that this is the second table type in Section 3; and 'y' indicates the table number for a specific system. For example, for the Reactor Pressure Vessel, within the Reactor Vessel, Internals, and Reactor Coolant System subsection, this table would be 3.1.2-3 and for the Reactor Recirculation System, it would be table 3.1.2-4. For the Containment Hydrogen Recombiner System, within the Engineered Safety Features (ESF) subsection, this table would be 3.2.2-1. For the next system within the ESF subsection, it would be table 3.2.2-2. For ease of discussion, this table will hereafter be referred to in this section as "Table 2."

TABLE DESCRIPTION

NUREG-1801, "Generic Aging Lessons Learned (GALL) Report," contains the generic evaluation of existing plant programs. It documents the technical basis for determining where existing programs are adequate without modification, and where existing programs should be augmented for the extended period of operation. The evaluation results documented in the report indicate that many of the existing programs are adequate to manage the aging effects for particular structures or components, within the scope of license renewal, without change. The report also contains recommendations on specific areas for which existing programs should be augmented for license renewal. In order to take full advantage of NUREG-1801, a comparison between the AMR results and the tables of NUREG-1801 has been made. The results of that comparison are provided in the two tables.

Table 1

The purpose of Table 1 is to provide a summary comparison of how the facility aligns with the corresponding tables of NUREG-1801, Volume 1. The table is essentially the same as Tables 3.1.1 through 3.6.1 provided in NUREG-1801, Volume 1, except that the "ID" and "Type" columns have been replaced by an "Item Number" column and the "Related Generic Item" and "Unique Item" columns have been replaced by a "Discussion" column.

The "Item Number" column provides the reviewer with a means to cross-reference from Table 2 to Table 1.

The "Discussion" column is used to provide clarifying or amplifying information. The following are examples of information that might be contained within this column:

- "Further Evaluation Recommended" information or reference to where that information is located
- The name of a plant specific aging management program being used
- Exceptions to the NUREG-1801 assumptions
- A discussion of how the line is consistent with the corresponding line item in NUREG-1801, Volume 1, when that may not be intuitively obvious
- A discussion of how the item is different than the corresponding line item in NUREG-1801, Volume 1, when it may appear to be consistent (e.g., when there is exception taken to an aging management program that is listed in NUREG-1801, Volume 1)

The format of Table 1 provides the reviewer with a means of aligning a specific Table 1 row with the corresponding NUREG-1801, Volume 1 table row, thereby allowing for the ease of checking consistency.

Table 2

Table 2 provides the detailed results of the aging management reviews for those components identified in LRA Section 2 as being subject to aging management review. There will be a Table 2 for each of the systems within a Chapter 3 Section grouping. For example, for Hope Creek, the Engineered Safety Features System Group contains tables specific to the Automatic Depressurization System, Containment Hydrogen Recombiner System, Core Spray System, Filtration, Recirculation, and Ventilation System, High Pressure Coolant Injection (HPCI) System, Hydrogen and Oxygen Analyzer System, Reactor Core Isolation Cooling (RCIC) System, Residual Heat Removal (RHR) System and Vacuum Relief Valve System.

Table 2 consists of the following nine columns:

- Component Type
- Intended Function
- Material

- Environment
- Aging Effect Requiring Management
- Aging Management Programs
- NUREG-1801 Volume 2 Item
- Table 1 Item
- Notes

Component Type – The first column identifies all of the component types from Section 2 of the LRA that are subject to aging management review. They are listed in alphabetical order.

Intended Function – The second column contains the license renewal intended functions for the listed component types. Definitions of intended functions are contained in Table 2.1-1.

Material – The third column lists the particular materials of construction for the component type.

Environment – The fourth column lists the environment to which the component types are exposed. Internal and external service environments are indicated and a list of these environments is provided in Tables 3.0-1 and 3.0-2, respectively.

Aging Effect Requiring Management – As part of the aging management review process, the aging effects/mechanisms required to maintain the intended function of the component type are identified for the material and environment combination. These aging effects/mechanisms requiring management are listed in the fifth column.

Aging Management Programs – The aging management programs used to manage the aging effects requiring management are listed in the sixth column of Table 2. Aging management programs are described in Appendix B.

NUREG-1801, Vol. 2 Item – Each combination of component type, material, environment, aging effect/mechanism requiring management, and aging management program that is listed in Table 2, is compared to NUREG-1801, Volume 2 with consideration given to the standard notes, to identify consistency. Consistency is documented by noting the appropriate NUREG-1801, Volume 2 item number in the seventh column of Table 2. If there is no corresponding item number in NUREG-1801, Volume 2, this row is left blank. Thus, a reviewer can readily identify the correlation between the plant-specific tables and the NUREG-1801, Volume 2 tables.

Table 1 Item – Each combination of component, material, environment, aging effect/mechanism requiring management, and aging management program that has an identified NUREG-1801, Volume 2 item number must also have a Table 3.x.1 line item reference number. The corresponding line item from Table 1 is listed in the eighth column of Table 2. If there is no corresponding item in NUREG-1801, Volume 1, this row in column eight is left blank. The Table 1 Item allows the information from the two tables can be correlated.

Notes – The notes provided in each Table 2 describe how the information in the table aligns with the information in NUREG-1801. Each Table 2 contains both standard lettered notes and plant-specific numbered notes.

The standard lettered notes, e.g., A, B, C, etc., provide standard information regarding comparison of the Hope Creek aging management review results with the NUREG-1801, Volume 2 Aging Management Table line item identified in the seventh column. In addition to the standard lettered notes, numbered plant-specific notes provide additional clarifying information when appropriate.

TABLE USAGE

Table 1

The reviewer evaluates each row in Table 1 by moving from left to right across the table. Since the Component, Aging Effect, Aging Management Programs and Further Evaluation Recommended information is taken directly from NUREG-1801, Volume 1, no further analysis of those columns is required. The information intended to help the reviewer the most in this table is contained within the Discussion column. Here the reviewer will be given information necessary to determine, in summary, how the Hope Creek evaluations and programs align with NUREG-1801, Volume 1. This may be in the form of descriptive information within the Discussion column or the reviewer may be referred to other locations within the LRA for further information.

Table 2

Table 2 contains all of the Aging Management Review information for the plant, whether or not it aligns with NUREG-1801. For a given row within the table, the reviewer is able to see the intended function, material, environment, aging effect/mechanism requiring management and aging management program combination for a particular component type within a system. In addition, if there is a correlation between the combination in Table 2 and a combination in NUREG-1801, Volume 2, this will be identified by a referenced item number in column seven, NUREG-1801, Volume 2 Item. The reviewer can refer to the item number in NUREG-1801, Volume 2, if desired, to verify the correlation. If the column is blank, no corresponding combination in NUREG-1801, Volume 2 was found. As the reviewer continues across the table from left to right, within a given row, the next column is labeled Table 1 Item. If there is a reference number in this column, the reviewer is able to use that reference number to locate the corresponding row in Table 1 and see how the aging management program for this particular combination aligns with NUREG-1801.

Table 2 provides the reviewer with a means to navigate from the components subject to Aging Management Review (AMR) in LRA Section 2 all the way through the evaluation of the programs that will be used to manage the effects of aging of those components.

A listing of the abbreviations used in this section is provided in Section 1.6.

Cumulative Fatigue Damage and TLAAs in Table 2

A Fatigue analysis is a time-limited aging analysis (TLAA) as defined in 10 CFR 54.3. TLAAs are required to be evaluated in accordance with 10 CFR 54.21(c)(1). For those components subject to cumulative fatigue usage, the impact on existing TLAAs was evaluated and is addressed in Section 4.3.

Where specified by NUREG-1801, Volume 2, the following rules were used when applying TLAA to the aging effects associated with cumulative fatigue for a component:

1. For all pressure retaining components in a system that are subject to the aging effects of cumulative fatigue, a TLAA is applied for component types, including piping and fittings, and valves.

2. The use of TLAA in the following tables indicates that the current licensing basis was reviewed for TLAAs and the fatigue analysis was evaluated where one exists for that component. However, not every component has an explicit fatigue analysis. In these instances, as stated in Section 4.3, piping and components were designed to codes and standards that require application of stress range reduction factors to account for cyclic thermal conditions. Maintaining plant thermal cycles within the code design limit ensures components such as piping, piping components, and bolting are within fatigue limits.

Table 3.0-1 – Hope Creek Internal Service Environments

Hope Creek AMR Environment	Description	NUREG-1801 Environments Used For AMR Comparison
Air/Gas-Dry	Air/Gas-Dry includes air with a very limited percentage of moisture present that has been treated to reduce the dew point well below the system operating temperature. This includes air downstream of dryers in air systems and includes the air inside systems with temperatures higher than the dew point that have surfaces that are normally dry. It also includes commercial grade gases (such as nitrogen, Freon, etc.) that are provided as a high quality product with little if any external contaminants.	Gas Dried air
Air/Gas-Wetted	Air/Gas-Wetted includes air/gas environments containing significant amounts of moisture where condensation or water pooling may occur. This environment includes air with enough moisture to facilitate loss of material in steel caused by general, pitting, and crevice corrosion. Any internal air environment that does not meet the definition of Air/Gas – Dry is categorized as Air/Gas – Wetted, which includes outdoor air drawn inside ventilation systems.	Condensation Condensation (Internal) Moist air or condensation (internal)
Closed Cycle Cooling Water	Closed Cycle Cooling Water includes treated water subject to the Closed-Cycle Cooling Water System Program, which is Aging Management Program XI.M21 in NUREG-1801. The Closed-Cycle Cooling Water System Program relies on maintenance of system corrosion inhibitor concentrations within specified limits of Electric Power Research Institute TR-107396 to minimize corrosion. Demineralized water is treated with corrosion inhibitors, pH control agents, or biocides, as needed.	Closed cycle cooling water
Closed Cycle Cooling Water >140°F	Closed Cycle Cooling Water >140 °F is Closed Cycle Cooling Water that has a temperature greater than 140 °F. This environment is identified when applicable for stainless steel components subject to cracking. Refer to the Closed Cycle Cooling Water environment definition for further details.	Closed cycle cooling water >140 °F (For cracking of stainless steel components) Closed cycle cooling water (all other applicable aging effects)

Hope Creek AMR Environment	Description	NUREG-1801 Environments Used For AMR Comparison
Diesel Exhaust	Diesel Exhaust represents the exhaust from diesel engines. It is considered to have the potential to concentrate contaminants and be subject to wetting through condensation.	Diesel exhaust
Fuel Oil	Fuel Oil includes fuel oil for the emergency diesel generators and diesel-driven fire pumps. Water contamination of fuel oil is assumed.	Fuel oil
Lubricating Oil	Lubricating Oils are low to medium viscosity hydrocarbons used for bearing, gear, and engine lubrication. Water contamination of lubricating oil is assumed.	Lubricating oil
Raw Water	The Delaware River and ground water from wells provide the sources of raw water utilized by HCGS. Raw water is also rain or ground water. Raw water is water that has not been demineralized or chemically treated to any significant extent. For use in systems, the water has been rough filtered to remove large particles and may contain a biocide additive for control of micro- and macro-organisms. Raw water may contain contaminants. Drainage systems may be exposed to a variety of contaminated or untreated water that is thus classified as raw water for the determination of aging effects.	Raw water Water – standing Water – flowing
Reactor Coolant	Reactor Coolant is demineralized water used within the Reactor Coolant System. The Reactor Coolant environment also includes steam inside the reactor vessel. The temperature of the Reactor Coolant environment is assumed to be >482 °F. The Reactor Coolant environment is used only for Reactor Pressure Vessel and Reactor Internals components. Components in other systems that form a portion of the reactor coolant pressure boundary use the Treated Water environment. See the definition for Treated Water.	Reactor coolant
Reactor Coolant and Neutron Flux	The Reactor Coolant and Neutron Flux environment consists of the Reactor Coolant environment (defined above) in addition to component exposure to neutron fluence projected to exceed 1.0×10^{17} n/cm^2 within 60 years.	Reactor coolant Reactor coolant and neutron flux Reactor coolant >482°F and neutron flux

Hope Creek AMR Environment	Description	NUREG-1801 Environments Used For AMR Comparison
Sodium Pentaborate	Sodium Pentaborate solution is the liquid poison used in the Standby Liquid Control System.	Sodium pentaborate solution
Steam	The Steam environment consists of steam that is subject to chemistry controls set by the Water Chemistry Program.	Reactor coolant Steam Steam or treated water Treated water Treated water >140 °F
Treated Water	Treated water is demineralized water or chemically purified water and is the base water for all clean systems. Depending on the system, treated water may require further processing. Treated water may be deaerated and may include additives to protect reactor vessel internal and other reactor system components, and may include wet steam environments.	Reactor coolant Treated water Air – indoor uncontrolled or treated water
Treated Water >140°F	Treated Water >140 °F is Treated Water that has a temperature greater than 140 °F. This environment is identified when applicable for stainless steel components subject to cracking. Refer to the Treated Water environment definition for further details.	Air with reactor coolant leakage (Internal) or Reactor coolant Reactor coolant Treated water Treated water >140 °F (For cracking of stainless steel components) Steam
Treated Water >482°F	Treated Water >482 °F is Treated Water that has a temperature greater than 482 °F, and may include wet steam environments. This environment is selected for systems operating at temperatures >482°F and that contain Cast Austenitic Stainless Steel (CASS) components. Refer to the Treated Water environment definition for further details.	Reactor coolant Reactor coolant >482 °F Treated water >482 °F

Table 3.0-2 – Hope Creek External Service Environments

Hope Creek AMR Environment	Description	NUREG-1801 Environments Used For AMR Comparison
Adverse Local Environment	The Adverse Local Environment represents conditions with excessive heat, radiation, moisture, or voltage, sometimes in the presence of oxygen. The environmental conditions can be locally concentrated or applicable to a general plant area. This environment is used for electrical commodities.	Adverse localized environment
Air – Indoor (External)	Air - Indoor (External) consists of air environments that are in indoor locations and are sheltered/protected from weather. Humidity levels up to 100 percent are assumed and the surfaces of components in this environment might be wet. Additionally, this environment might contain aggressive chemical species including oxygen, halides, sulfates, or other aggressive corrosive substances that can influence the nature, rate, and severity of corrosion effects. It is assumed that these contaminants can concentrate to levels that will promote corrosive effects because of factors such as cyclic (wet-dry) condensation, contaminated insulation, accidental contamination, or leakage areas.	Air – indoor uncontrolled Air with steam or water leakage Air with reactor coolant leakage System temperature up to 550°F (applies to closure bolting) Soil (applies to structural cracking due to settlement) Various
Air – Outdoor (External)	Air – Outdoor (External) is atmospheric air with a temperature °F range of –34 °F to 110 °F and a relative humidity range of 10% to 100%. This environment is subject to periodic wetting and wind.	Air – outdoor Soil (applies to structural cracking due to settlement) Various System temperature up to 550°F (applies to closure bolting)
Concrete	Concrete is used for components that are embedded in concrete.	Concrete

Hope Creek AMR Environment	Description	NUREG-1801 Environments Used For AMR Comparison
Groundwater/soil	Groundwater is the water beneath the surface that can be collected with wells, tunnels, or drainage galleries, or that flows naturally to the earth's surface via seeps or springs. Soil is a mixture of inorganic materials produced by the weathering of rocks and clays, and organic material produced by the decomposition of vegetation. Voids containing air and moisture occupy ~50% of the soil volume. Concrete subjected to a groundwater/soil environment can be vulnerable to Increase in porosity and permeability, cracking, loss of material (spalling, scaling)/ aggressive chemical attack.	Groundwater/soil Soil Various
Soil	Soil is used for components that are buried in soil.	Soil
Water-flowing	Water that is refreshed, thus having larger impact on leaching; this can be rainwater, raw water, groundwater, or flowing water under a foundation.	Water-flowing Soil (applies to structural cracking due to settlement)
Water-standing	Water that is stagnant and unrefreshed, thus possibly resulting in an increased ionic strength of solution up to saturation.	Groundwater/soil Soil (applies to structural cracking due to settlement)

3.1 AGING MANAGEMENT OF REACTOR VESSEL, INTERNALS, AND REACTOR COOLANT SYSTEM

3.1.1 INTRODUCTION

This section provides the results of the aging management review for those components identified in Section 2.3.1, Reactor Vessel, Internals, and Reactor Coolant System, as being subject to aging management review. The systems, or portions of systems, which are addressed in this section are described in the indicated sections.

- Nuclear Boiler Instrumentation (2.3.1.3)
- Reactor Internals (2.3.1.4)
- Reactor Pressure Vessel (2.3.1.5)
- Reactor Recirculation System (2.3.1.6)

3.1.2 RESULTS

The following tables summarize the results of the aging management review for Reactor Vessel, Internals and Reactor Coolant System:

Table 3.1.2-1 Summary of Aging Management Evaluation – Nuclear Boiler Instrumentation

Table 3.1.2-2 Summary of Aging Management Evaluation – Reactor Internals

Table 3.1.2-3 Summary of Aging Management Evaluation – Reactor Pressure Vessel

Table 3.1.2-4 Summary of Aging Management Evaluation – Reactor Recirculation System

3.1.2.1 Materials, Environments, Aging Effects Requiring Management and Aging Management Programs

3.1.2.1.1 Nuclear Boiler Instrumentation

Materials

The materials of construction for the Nuclear Boiler Instrumentation components are:

- Carbon and Low Alloy Steel Bolting
- Carbon Steel
- Stainless Steel

Environments

The Nuclear Boiler Instrumentation components are exposed to the following environments:

- Air - Indoor
- Air/Gas - Wetted
- Steam

- Treated Water
- Treated Water > 140 F

Aging Effects Requiring Management

The following aging effects associated with the Nuclear Boiler Instrumentation components require management:

- Cracking/Stress Corrosion Cracking, Thermal and Mechanical Loading
- Cumulative Fatigue Damage/Fatigue
- Loss of Material/General, Pitting, Crevice Corrosion, and Galvanic Corrosion
- Loss of Preload/Thermal Effects, Gasket Creep, and Self-Loosening

Aging Management Programs

The following aging management programs manage the aging effects for the the Nuclear Boiler Instrumentation components:

- ASME Section XI Inservice Inspection, Subsections IWB, IWC, and IWD (B.2.1.1)
- Bolting Integrity (B.2.1.12)
- External Surfaces Monitoring (B.2.1.25)
- One-Time Inspection (B.2.1.22)
- Periodic Inspection (B.2.2.2)
- Small-Bore Class 1 Piping Inspection (B.2.2.6)
- TLAA
- Water Chemistry (B.2.1.2)

Table 3.1.2-1, Summary of Aging Management Evaluation – Nuclear Boiler Instrumentation summarizes the results of the aging management review for the Nuclear Boiler Instrumentation.

3.1.2.1.2 Reactor Internals

Materials

The materials of construction for the Reactor Internals components are:

- Cast Austenitic Stainless Steel (CASS)
- Nickel Alloy
- Stainless Steel
- Stainless Steel with Stellite Cladding

Environments

The Reactor Internals components are exposed to the following environments:

- Air - Indoor
- Reactor Coolant
- Reactor Coolant and Neutron Flux

Aging Effects Requiring Management

The following aging effects associated with the Reactor Internals components require management:

- Cracking/Stress Corrosion Cracking, Intergranular Stress Corrosion Cracking, Irradiation-Assisted Stress Corrosion Cracking, and Flow-Induced Vibration
- Cumulative Fatigue Damage/Fatigue
- Loss of Fracture Toughness/Thermal Aging Embrittlement and Neutron Irradiation Embrittlement
- Loss of Preload/Stress Relaxation
- Loss of Material/Pitting and Crevice Corrosion

Aging Management Programs

The following aging management programs manage the aging effects for the Reactor Internals components:

- BWR Vessel Internals (B.2.1.9)
- Thermal Aging and Neutron Irradiation Embrittlement of Cast Austenitic Stainless Steel (CASS) (B.2.1.10)
- TLAA
- Water Chemistry (B.2.1.2)

Table 3.1.2-2, Summary of Aging Management Evaluation – Reactor Internals summarizes the results of the aging management review for the Reactor Internals.

3.1.2.1.3 Reactor Pressure Vessel

Materials

The materials of construction for the Reactor Pressure Vessel components are:

- Carbon or Low Alloy Steel with Stainless Steel Cladding
- Carbon Steel
- Carbon and Low Alloy Steel Bolting

- High Strength Low Alloy Steel Bolting with Yield Strength of 150 ksi or Greater
- Low Alloy Steel
- Nickel Alloy
- Stainless Steel

Environments

The Reactor Pressure Vessel components are exposed to the following environments:

- Air-Indoor
- Reactor Coolant
- Reactor Coolant and Neutron Flux

Aging Effects Requiring Management

The following aging effects associated with the Reactor Pressure Vessel components require management:

- Cracking/Stress Corrosion Cracking and Cyclic Loading
- Cumulative Fatigue Damage/Fatigue
- Loss of Fracture Toughness/Neutron Irradiation Embrittlement
- Loss of Material/General, Pitting and Crevice Corrosion
- Loss of Preload/Thermal Effects, Gasket Creep, and Self-Loosening

Aging Management Programs

The following aging management programs manage the aging effects for the Reactor Pressure Vessel components:

- ASME Section XI Inservice Inspection, Subsections IWB, IWC, and IWD (B.2.1.1)
- Bolting Integrity (B.2.1.12)
- BWR Control Rod Drive Return Line Nozzle (B.2.1.6)
- BWR Feedwater Nozzle (B.2.1.5)
- BWR Penetrations (B.2.1.8)
- BWR Stress Corrosion Cracking (B.2.1.7)
- BWR Vessel ID Attachment Welds (B.2.1.4)
- BWR Vessel Internals (B.2.1.9)
- External Surfaces Monitoring (B.2.1.25)
- One-Time Inspection (B.2.1.22)

- Reactor Head Closure Studs (B.2.1.3)
- Reactor Vessel Surveillance (B.2.1.21)
- TLAA
- Water Chemistry (B.2.1.2)

Table 3.1.2-3, Summary of Aging Management Evaluation – Reactor Pressure Vessel summarizes the results of the aging management review for the Reactor Pressure Vessel.

3.1.2.1.4 Reactor Recirculation System

Materials

The materials of construction for the Reactor Recirculation System components are:

- Carbon and Low Alloy Steel Bolting
- Carbon Steel
- Cast Austenitic Stainless Steel (CASS)
- Glass
- Stainless Steel

Environments

The Reactor Recirculation System components are exposed to the following environments:

- Air - Indoor
- Treated Water
- Treated Water > 140 F
- Treated Water > 482 F

Aging Effects Requiring Management

The following aging effects associated with the Reactor Recirculation System components require management:

- Cracking/Stress Corrosion Cracking, Thermal and Mechanical Loading
- Cumulative Fatigue Damage/Fatigue
- Loss of Fracture Toughness/Thermal Aging Embrittlement
- Loss of Material/General, Pitting, Crevice Corrosion, and Galvanic Corrosion
- Loss of Preload/Thermal Effects, Gasket Creep, and Self-Loosening

Aging Management Programs

The following aging management programs manage the aging effects for the Reactor Recirculation System components:

- ASME Section XI Inservice Inspection, Subsections IWB, IWC, and IWD (B.2.1.1)
- Bolting Integrity (B.2.1.12)
- BWR Stress Corrosion Cracking (B.2.1.7)
- External Surfaces Monitoring (B.2.1.25)
- One-Time Inspection (B.2.1.22)
- Small-Bore Class 1 Piping Inspection (B.2.2.6)
- TLAA
- Water Chemistry (B.2.1.2)

Table 3.1.2-4, Summary of Aging Management Evaluation – Reactor Recirculation System summarizes the results of the aging management review for the Reactor Recirculation System.

3.1.2.2 AMR Results for Which Further Evaluation is Recommended by the GALL Report

NUREG-1801 provides the basis for identifying those programs that warrant further evaluation by the reviewer in the license renewal application. For the Reactor Vessel, Internals, and Reactor Coolant System, those programs are addressed in the following subsections.

3.1.2.2.1 Cumulative Fatigue Damage

Fatigue is a time-limited aging analysis (TLAA) as defined in 10 CFR 54.3. TLAAs are required to be evaluated in accordance with 10 CFR 54.21(c)(1). The evaluation of metal fatigue as a TLAA for the Core Spray, Feedwater, High Pressure Coolant Injection, Main Steam, Nuclear Boiler Instrumentation, Reactor Core Isolation Cooling, Reactor Internals, Reactor Pressure Vessel, Reactor Recirculation, Reactor Water Cleanup, and Residual Heat Removal Systems is discussed in Section 4.3.

Item Numbers 3.1.1-6, 3.1.1-7, 3.1.1-8, 3.1.1-9, and 3.1.1-10 are applicable to PWRs only and are not used for Hope Creek.

3.1.2.2.2 Loss of Material due to General, Pitting, and Crevice Corrosion

1. *Loss of material due to general, pitting, and crevice corrosion could occur in the steel PWR steam generator shell assembly exposed to secondary feedwater and steam. Loss of material due to general, pitting, and crevice corrosion could also occur for the steel top head enclosure (without cladding) top head nozzles [vent, top head spray or reactor core isolation cooling (RCIC), and spare] exposed to reactor coolant. The existing program relies on control of reactor water chemistry to*

mitigate corrosion. However, control of water chemistry does not preclude loss of material due to pitting and crevice corrosion at locations of stagnant flow conditions. Therefore, the effectiveness of the chemistry control program should be verified to ensure that corrosion is not occurring. The GALL Report recommends further evaluation of programs to verify the effectiveness of the chemistry control program. A one-time inspection of select components at susceptible locations is an acceptable method to determine whether an aging effect is not occurring or an aging effect is progressing very slowly such that the component's intended function will be maintained during the period of extended operation.

Hope Creek will implement a One-Time Inspection program, B.2.1.22, for susceptible locations to verify the effectiveness of the Water Chemistry program, B.2.1.2, to manage the loss of material due to general, pitting and crevice corrosion of the carbon and low alloy steel for reactor vessel nozzles (head spray, head vent, spare, bottom head drain, feedwater, instrumentation, low pressure coolant injection, main steam, seal leak detection), nozzle safe ends and welds (core spray, feedwater, head spray, low pressure coolant injection, seal leak detection), reactor vessel internal attachments, reactor vessel top head and flange and reactor coolant pressure boundary components exposed to reactor coolant in the Reactor Pressure Vessel. The One-Time Inspection and Water Chemistry programs are described in Appendix B.

Item Number 3.1.1-12 is applicable to PWRs only and is not used for Hope Creek.

2. *Loss of material due to pitting and crevice corrosion could occur in stainless steel BWR isolation condenser components exposed to reactor coolant. Loss of material due to general, pitting, and crevice corrosion could occur in steel BWR isolation condenser components. The existing program relies on control of reactor water chemistry to mitigate corrosion. However, control of water chemistry does not preclude loss of material due to pitting and crevice corrosion at locations of stagnant flow conditions. Therefore, the effectiveness of the chemistry control program should be verified to ensure that corrosion is not occurring. The GALL Report recommends further evaluation of programs to verify the effectiveness of the chemistry control program. A one-time inspection of select components at susceptible locations is an acceptable method to determine whether an aging effect is not occurring or an aging effect is progressing very slowly such that the component's intended function will be maintained during the period of extended operation.*

   Hope Creek will implement a One-Time Inspection program, B.2.1.22, for susceptible locations to verify the effectiveness of the Water Chemistry program, B.2.1.2, to manage the loss of material due to general, pitting and crevice corrosion of the carbon steel piping and fittings exposed to treated water and steam in the Core Spray, Feedwater, High Pressure Coolant Injection, Main Steam, Nuclear Boiler Instrumentation, Reactor Core Isolation Cooling, Reactor Recirculation, Reactor Water Cleanup, and Residual Heat Removal Systems. Hope Creek does not have Isolation Condensers. The One-Time Inspection and Water Chemistry programs are described in Appendix B.

3. *Loss of material due to pitting and crevice corrosion could occur for stainless steel, nickel alloy, and steel with stainless steel or nickel alloy cladding flanges, nozzles,*

penetrations, pressure housings, safe ends, and vessel shells, heads and welds exposed to reactor coolant. The existing program relies on control of reactor water chemistry to mitigate corrosion. However, control of water chemistry does not preclude loss of material due to pitting and crevice corrosion at locations of stagnant flow conditions. Therefore, the effectiveness of the chemistry control program should be verified to ensure that corrosion is not occurring. The GALL Report recommends further evaluation of programs to verify the effectiveness of the chemistry control program. A one-time inspection of select components at susceptible locations is an acceptable method to determine whether an aging effect is not occurring or an aging effect is progressing very slowly such that the component's intended function will be maintained during the period of extended operation.

Hope Creek will implement a One-Time Inspection program, B.2.1.22, for susceptible locations to verify the effectiveness of the Water Chemistry program, B.2.1.2, to manage the loss of material due to pitting and crevice corrosion of the stainless steel, cast austenitic stainless steel, nickel-alloy, and steel with stainless steel cladding for reactor vessel flange, nozzles, penetrations, safe ends, thermal sleeves, vessel shells, heads, welds, and reactor coolant pressure boundary components including piping, piping elements and piping components exposed to treated water and steam in the Core Spray, High Pressure Coolant Injection, Main Steam, Nuclear Boiler Instrumentation, Process and Post-Accident Sampling, Reactor Core Isolation Cooling, Reactor Pressure Vessel, Reactor Recirculation, Reactor Water Cleanup, Residual Heat Removal, and Standby Liquid Control Systems. The One-Time Inspection and Water Chemistry programs are described in Appendix B.

4. Item Number 3.1.1-16 is applicable to PWRs only and is not used for Hope Creek.

3.1.2.2.3 Loss of Fracture Toughness due to Neutron Irradiation Embrittlement

1. *Neutron irradiation embrittlement is a TLAA to be evaluated for the period of extended operation for all ferritic materials that have a neutron fluence greater than 10^{17} n/cm2 (E >1 MeV) at the end of the license renewal term. Certain aspects of neutron irradiation embrittlement are TLAAs as defined in 10 CFR 54.3. TLAAs are required to be evaluated in accordance with 10 CFR 54.21(c)(1). This TLAA is addressed separately in Section 4.2, "Reactor Vessel Neutron Embrittlement Analysis," of this SRP-LR.*

   Neutron irradiation embrittlement is a TLAA as defined in 10 CFR 54.3. TLAAs are required to be evaluated in accordance with 10 CFR 54.21(c)(1). The evaluation of neutron irradiation embrittlement as a TLAA for the Reactor Pressure Vessel is discussed in Section 4.2.

2. *Loss of fracture toughness due to neutron irradiation embrittlement could occur in BWR and PWR reactor vessel beltline shell, nozzle, and welds exposed to reactor coolant and neutron flux. A reactor vessel materials surveillance program monitors neutron irradiation embrittlement of the reactor vessel. Reactor vessel surveillance program is plant-specific, depending on matters such as the composition of limiting materials, availability of surveillance capsules, and projected fluence levels. In*

accordance with 10 CFR Part 50, Appendix H, an applicant is required to submit its proposed withdrawal schedule for approval prior to implementation. Untested capsules placed in storage must be maintained for future insertion. Thus, further staff evaluation is required for license renewal. Specific recommendations for an acceptable AMP are provided in Chapter XI, Section M31 of the GALL Report.

Hope Creek will use the Reactor Vessel Surveillance program, B.2.1.21, to manage the loss of fracture toughness due to neutron irradiation embrittlement of the steel with stainless steel cladding for the reactor vessel shell exposed to reactor coolant and neutron flux. The Hope Creek Reactor Vessel Surveillance program relies on the BWR Integrated Surveillance Program (ISP) and satisfies the requirements of 10 CFR 50, Appendix H. The Reactor Vessel Surveillance aging management program includes periodic testing of metallurgical surveillance samples to monitor the progress of neutron embrittlement of the reactor pressure vessel as a function of neutron fluence, in accordance with Regulatory Guide (RG) 1.99, "Radiation Embrittlement of Reactor Vessel Materials," Revision 2. BWRVIP-116 identifies and schedules additional capsules to be withdrawn and tested during the license renewal period. Hope Creek will continue using the Integrated Surveillance Program during the period of extended operation by implementing the requirements of BWRVIP-116. The Reactor Vessel Surveillance program will adequately identify, evaluate, and manage the effects of loss of fracture toughness due to neutron irradiation embrittlement of the steel with stainless steel cladding of the reactor vessel to ensure there is no loss of intended function during the period of extended operation. The Reactor Vessel Surveillance program is described in Appendix B.

3.1.2.2.4 Cracking due to Stress Corrosion Cracking (SCC) and Intergranular Stress Corrosion Cracking (IGSCC)

1. *Cracking due to SCC and IGSCC could occur in the stainless steel and nickel alloy BWR top head enclosure vessel flange leak detection lines. The GALL Report recommends that a plant-specific AMP be evaluated because existing programs may not be capable of mitigating or detecting cracking due to SCC and IGSCC. Acceptance criteria are described in Branch Technical Position RLSB-1.*

   Hope Creek will use ASME Section XI Inservice Inspection, Subsections IWB, IWC, and IWD program, B.2.1.1, and Water Chemistry, B.2.1.2, to manage the effects of stress corrosion cracking in the stainless steel vessel flange leak detection line exposed to treated water. The head seal leak detection line is evaluated in the Main Steam System under the Steam and Power Conversion Systems grouping. The Hope Creek ISI Program, as discusssed in an approved relief request, utilizes a VT-2 visual examination on the line prior to reactor cavity drain down during each refueling outage. The Water Chemistry program activities provide for monitoring and controlling of water chemistry in accordance with EPRI BWR Vessel and Internals Project BWR Water Chemistry Guidelines. The Water Chemistry program activities prevent or mitigate loss of material, reduction of heat transfer and cracking aging effects to ensure there is no loss of component intended function. The ISI examinations together with the Water Chemistry program will adequately identify, evaluate, and manage the effects of stress corrosion cracking in the stainless steel vessel flange leak detection line to ensure

there is no loss of intended function during the period of extended operation. The ASME Section XI Inservice Inspection, Subsections IWB, IWC, and IWD and Water Chemistry programs are described in Appendix B.

2. *Cracking due to SCC and IGSCC could occur in stainless steel BWR isolation condenser components exposed to reactor coolant. The existing program relies on control of reactor water chemistry to mitigate SCC and on ASME Section XI ISI. However, the existing program should be augmented to detect cracking due to SCC and IGSCC. The GALL Report recommends an augmented program to include temperature and radioactivity monitoring of the shell-side water, and eddy current testing of tubes to ensure that the component's intended function will be maintained during the period of extended operation. Acceptance criteria are described in Branch Technical Position RLSB-1.*

   Item Number 3.1.1-20 is not applicable to Hope Creek. The item applies only to Isolation Condenser components. Hope Creek does not have Isolation Condensers.

3.1.2.2.5 Crack Growth due to Cyclic Loading

Item Number 3.1.1-21 is applicable to PWRs only and is not used for Hope Creek.

3.1.2.2.6 Loss of Fracture Toughness due to Neutron Irradiation Embrittlement and Void Swelling

Item Number 3.1.1-22 is applicable to PWRs only and is not used for Hope Creek.

3.1.2.2.7 Cracking due to Stress Corrosion Cracking

1. Item Number 3.1.1-23 is applicable to PWRs only and is not used for Hope Creek.

2. Item Number 3.1.1-24 is applicable to PWRs only and is not used for Hope Creek.

3.1.2.2.8 Cracking due to Cyclic Loading

1. *Cracking due to cyclic loading could occur in the stainless steel BWR jet pump sensing lines. The GALL Report recommends that a plant specific AMP be evaluated to ensure that this aging effect is adequately managed. Acceptance criteria are described in Branch Technical Position RLSB-1.*

   Item Number 3.1.1-25 is not applicable to Hope Creek. The stainless steel jet pump sensing lines internal to the reactor vessel are not required to support intended functions and are not included within the scope of license renewal. A safety assessment for these components has been performed and reported in BWRVIP-06. The evaluation concluded that these components do not perform a safety related function. This report also concluded that failure of these components will not result in consequential failure of any safety related equipment. The lines outside of the vessel are not subjected to flow-induced vibration, but are part of the reactor coolant pressure boundary and are subject to aging managment review. Cracking due to stress corrosion cracking and thermal and mechanical loading of

the stainless steel lines external to the reactor vessel is addressed by item 3.1.1-48 of Table 3.1.1.

2. *Cracking due to cyclic loading could occur in steel and stainless steel BWR isolation condenser components exposed to reactor coolant. The existing program relies on ASME Section XI ISI. However, the existing program should be augmented to detect cracking due to cyclic loading. The GALL Report recommends an augmented program to include temperature and radioactivity monitoring of the shell-side water, and eddy current testing of tubes to ensure that the component's intended function will be maintained during the period of extended operation. Acceptance criteria are described in Branch Technical Position RLSB-1.*

   Item Number 3.1.1-26 is not applicable to Hope Creek. The item applies only to Isolation Condenser components. Hope Creek does not have Isolation Condensers.

3.1.2.2.9 Loss of Preload due to Stress Relaxation

Item Number 3.1.1-27 is applicable to PWRs only and is not used for Hope Creek.

3.1.2.2.10 Loss of Material due to Erosion

Item Number 3.1.1-28 is applicable to PWRs only and is not used for Hope Creek.

3.1.2.2.11 Cracking due to Flow-Induced Vibration

Cracking due to flow-induced vibration could occur for the BWR stainless steel steam dryers exposed to reactor coolant. The GALL Report recommends further evaluation of a plant-specific AMP to ensure that this aging effect is adequately managed. Acceptance criteria are described in Branch Technical Position RLSB-1.

Hope Creek will use the BWR Vessel Internals program, B.2.1.9, to manage the effects of cracking due to flow-induced vibration of the cast austenitic stainless steel and stainless steel for the steam dryers exposed to reactor coolant in the Reactor Internals. The BWR Vessel Internals program inspects, evaluates, and repairs flaws, in accordance with the guidelines provided in BWRVIP-139, BWR Vessel and Internals Project Steam Dryer Inspection and Flaw Evaluation. Following the guidelines in BWRVIP-139 will adequately identify, evaluate, and manage the effects of cracking due to flow-induced vibration of the cast austenitic stainless steel and stainless steel for the steam dryers to ensure there is no loss of intended function during the period of extended operation. The BWR Vessel Internals program is described in Appendix B.

3.1.2.2.12 Cracking due to Stress Corrosion Cracking and Irradiation-Assisted Stress Corrosion Cracking (IASCC)

Item Number 3.1.1-30 is applicable to PWRs only and is not used for Hope Creek.

3.1.2.2.13 Cracking due to Primary Water Stress Corrosion Cracking (PWSCC)

Item Number 3.1.1-31 is applicable to PWRs only and is not used for Hope Creek.

3.1.2.2.14 Wall Thinning due to Flow-Accelerated Corrosion

Item Number 3.1.1-32 is applicable to PWRs only and is not used for Hope Creek.

3.1.2.2.15 Changes in Dimensions due to Void Swelling

Item Number 3.1.1-33 is applicable to PWRs only and is not used for Hope Creek.

3.1.2.2.16 Cracking due to Stress Corrosion Cracking and Primary Water Stress Corrosion Cracking

1. Item Numbers 3.1.1-34 and 3.1.1-35 are applicable to PWRs only and are not used for Hope Creek.

2. Item Number 3.1.1-36 is applicable to PWRs only and is not used for Hope Creek.

3.1.2.2.17 Cracking due to Stress Corrosion Cracking, Primary Water Stress Corrosion Cracking, and Irradiation-Assisted Stress Corrosion Cracking

Item Number 3.1.1-37 is applicable to PWRs only and is not used for Hope Creek.

3.1.2.2.18 Quality Assurance for Aging Management of Nonsafety-Related Components

QA provisions applicable to License Renewal are discussed in Section B.1.3.

3.1.2.3 Time-Limited Aging Analysis

The time-limited aging analyses identified below are associated with the Reactor Vessel, Internals, and Reactor Coolant System components:

- Section 4.2, Neutron Embrittlement of the Reactor Vessel and Internals
- Section 4.3, Metal Fatigue of the Reactor Pressure Vessel, Internals, and Reactor Coolant Pressure Boundary Piping and Components

3.1.3 CONCLUSION

The Reactor Vessel, Internals and Reactor Coolant System components that are subject to aging management review have been identified in accordance with the requirements of 10 CFR 54.4. The aging management programs selected to manage aging effects for the Reactor Vessel, Internals, and Reactor Coolant System components are identified in the summaries in Section 3.1.2.1 above.

A description of these aging management programs is provided in Appendix B, along with the demonstration that the identified aging effects will be managed for the period of extended operation.

Therefore, based on the conclusions provided in Appendix B, the effects of aging associated with the Reactor Vessel, Internals, and Reactor Coolant System components will be adequately managed so that there is reasonable assurance that the intended function(s) will be maintained consistent with the current licensing basis during the period of extended operation.

Table 3.1.1 Summary of Aging Management Evaluations for the Reactor Vessel, Internals, and Reactor Coolant System

Item Number	Component	Aging Effect/Mechanism	Aging Management Programs	Further Evaluation Recommended	Discussion
3.1.1-1	Steel pressure vessel support skirt and attachment welds	Cumulative fatigue damage	TLAA, evaluated in accordance with 10 CFR 54.21(c)	Yes, TLAA	Fatigue is a TLAA; further evaluation is documented in Subsection 3.1.2.2.1.
3.1.1-2	Steel; stainless steel; steel with nickel-alloy or stainless steel cladding; nickel-alloy reactor vessel components: flanges; nozzles; penetrations; safe ends; thermal sleeves; vessel shells, heads and welds	Cumulative fatigue damage	TLAA, evaluated in accordance with 10 CFR 54.21(c) and environmental effects are to be addressed for Class 1 components	Yes, TLAA	Fatigue is a TLAA; further evaluation is documented in Subsection 3.1.2.2.1.
3.1.1-3	Steel; stainless steel; steel with nickel-alloy or stainless steel cladding; nickel-alloy reactor coolant pressure boundary piping, piping components, and piping elements exposed to reactor coolant	Cumulative fatigue damage	TLAA, evaluated in accordance with 10 CFR 54.21(c) and environmental effects are to be addressed for Class 1 components	Yes, TLAA	Fatigue is a TLAA; further evaluation is documented in Subsection 3.1.2.2.1.

Table 3.1.1 Summary of Aging Management Evaluations for the Reactor Vessel, Internals, and Reactor Coolant System

Item Number	Component	Aging Effect/Mechanism	Aging Management Programs	Further Evaluation Recommended	Discussion
3.1.1-4	Steel pump and valve closure bolting	Cumulative fatigue damage	TLAA, evaluated in accordance with 10 CFR 54.21(c) check Code limits for allowable cycles (less than 7000 cycles) of thermal stress range	Yes, TLAA	Fatigue is a TLAA; further evaluation is documented in Subsection 3.1.2.2.1.
3.1.1-5	Stainless steel and nickel alloy reactor vessel internals components	Cumulative fatigue damage	TLAA, evaluated in accordance with 10 CFR 54.21(c)	Yes, TLAA	Fatigue is a TLAA; further evaluation is documented in Subsection 3.1.2.2.1.
3.1.1-6	PWR Only				
3.1.1-7	PWR Only				
3.1.1-8	PWR Only				
3.1.1-9	PWR Only				
3.1.1-10	PWR Only				

Table 3.1.1 Summary of Aging Management Evaluations for the Reactor Vessel, Internals, and Reactor Coolant System

Item Number	Component	Aging Effect/Mechanism	Aging Management Programs	Further Evaluation Recommended	Discussion
3.1.1-11	Steel top head enclosure (without cladding) top head nozzles (vent, top head spray or RCIC, and spare) exposed to reactor coolant	Loss of material due to general, pitting and crevice corrosion	Water Chemistry and One-Time Inspection	Yes, detection of aging effects is to be evaluated	Consistent with NUREG-1801 with exceptions. The One-Time Inspection program, B.2.1.22, will be used to verify the effectiveness of the Water Chemistry program, B.2.1.2, to manage loss of material due to general, pitting and crevice corrosion of the carbon and low alloy steel for the reactor vessel nozzles, nozzle safe ends and welds, reactor coolant pressure boundary components, reactor vessel internal attachments and reactor vessel top head and flange exposed to reactor coolant. Exceptions apply to the NUREG-1801 recommendations for Water Chemistry program implementation. See subsection 3.1.2.2.2.1.
3.1.1-12	PWR Only				

Table 3.1.1 Summary of Aging Management Evaluations for the Reactor Vessel, Internals, and Reactor Coolant System

Item Number	Component	Aging Effect/Mechanism	Aging Management Programs	Further Evaluation Recommended	Discussion
3.1.1-13	Steel and stainless steel isolation condenser components exposed to reactor coolant	Loss of material due to general (steel only), pitting and crevice corrosion	Water Chemistry and One-Time Inspection	Yes, detection of aging effects is to be evaluated	Consistent with NUREG-1801 with exceptions. The One-Time Inspection program, B.2.1.22, will be used to verify the effectiveness of the Water Chemistry program, B.2.1.2, to manage loss of material due to general, pitting and crevice corrosion of the carbon steel piping, piping elements and piping components exposed to treated water and steam. Exceptions apply to the NUREG-1801 recommendations for Water Chemistry program implementation. See subsection 3.1.2.2.2.2.

Table 3.1.1 Summary of Aging Management Evaluations for the Reactor Vessel, Internals, and Reactor Coolant System

Item Number	Component	Aging Effect/Mechanism	Aging Management Programs	Further Evaluation Recommended	Discussion
3.1.1-14	Stainless steel, nickel-alloy, and steel with nickel-alloy or stainless steel cladding reactor vessel flanges, nozzles, penetrations, safe ends, vessel shells, heads and welds	Loss of material due to pitting and crevice corrosion	Water Chemistry and One-Time Inspection	Yes, detection of aging effects is to be evaluated	Consistent with NUREG-1801 with exceptions. The One-Time Inspection program, B.2.1.22, will be used to verify the effectiveness of the Water Chemistry program, B.2.1.2, to manage loss of material due to pitting and crevice corrosion of the stainless steel, nickel-alloy and steel with stainless steel cladding for the reactor vessel flange, nozzles, penetrations, safe ends, thermal sleeves, vessel shells, heads, welds, and reactor coolant pressure boundary components exposed to reactor coolant. Exceptions apply to the NUREG-1801 recommendations for Water Chemistry program implementation. See subsection 3.1.2.2.2.3.

Table 3.1.1 Summary of Aging Management Evaluations for the Reactor Vessel, Internals, and Reactor Coolant System

Item Number	Component	Aging Effect/Mechanism	Aging Management Programs	Further Evaluation Recommended	Discussion
3.1.1-15	Stainless steel; steel with nickel-alloy or stainless steel cladding; and nickel-alloy reactor coolant pressure boundary components exposed to reactor coolant	Loss of material due to pitting and crevice corrosion	Water Chemistry and One-Time Inspection	Yes, detection of aging effects is to be evaluated	Consistent with NUREG-1801 with exceptions. The One-Time Inspection program, B.2.1.22, will be used to verify the effectiveness of the Water Chemistry program, B.2.1.2, to manage loss of material due to pitting and crevice corrosion of the stainless steel, and cast austenitic stainless steel for the piping, piping elements and piping components exposed to treated water and steam. Exceptions apply to the NUREG-1801 recommendations for Water Chemistry program implementation. See subsection 3.1.2.2.2.3.
3.1.1-16	PWR Only				

Table 3.1.1 Summary of Aging Management Evaluations for the Reactor Vessel, Internals, and Reactor Coolant System

Item Number	Component	Aging Effect/Mechanism	Aging Management Programs	Further Evaluation Recommended	Discussion
3.1.1-17	Steel (with or without stainless steel cladding) reactor vessel beltline shell, nozzles, and welds	Loss of fracture toughness due to neutron irradiation embrittlement	TLAA, evaluated in accordance with Appendix G of 10 CFR Part 50 and RG 1.99. The applicant may choose to demonstrate that the materials of the nozzles are not controlling for the TLAA evaluations.	Yes, TLAA	Loss of fracture toughness due to neutron irradiation embrittlement is a TLAA; further evaluation is documented in Subsection 3.1.2.2.3.1.
3.1.1-18	Steel (with or without stainless steel cladding) reactor vessel beltline shell, nozzles, and welds; safety injection nozzles	Loss of fracture toughness due to neutron irradiation embrittlement	Reactor Vessel Surveillance	Yes, plant specific	The Reactor Vessel Surveillance program, B.2.1.21, will be used to manage the loss of fracture toughness due to neutron irradiation embrittlement of the steel with stainless steel cladding for the reactor vessel shell exposed to reactor coolant and neutron flux. See Subsection 3.1.2.2.3.2.

Table 3.1.1 Summary of Aging Management Evaluations for the Reactor Vessel, Internals, and Reactor Coolant System

Item Number	Component	Aging Effect/Mechanism	Aging Management Programs	Further Evaluation Recommended	Discussion
3.1.1-19	Stainless steel and nickel alloy top head enclosure vessel flange leak detection line	Cracking due to stress corrosion cracking and intergranular stress corrosion cracking	A plant-specific aging management program is to be evaluated.	Yes, plant specific	The ASME Section XI Inservice Inspection, Subsections IWB, IWC, and IWD program, B.2.1.1, and Water Chemistry, B.2.1.2, will be used to manage the effects of stress corrosion cracking of the stainless steel for the vessel flange leak detection line exposed to treated water. See subsection 3.1.2.2.4.1.
3.1.1-20	Stainless steel isolation condenser components exposed to reactor coolant	Cracking due to stress corrosion cracking and intergranular stress corrosion cracking	Inservice Inspection (IWB, IWC, and IWD), Water Chemistry, and plant-specific verification program	Yes, detection of aging effects is to be evaluated	Not applicable. See subsection 3.1.2.2.4.2
3.1.1-21	PWR Only				
3.1.1-22	PWR Only				
3.1.1-23	PWR Only				
3.1.1-24	PWR Only				

Table 3.1.1 Summary of Aging Management Evaluations for the Reactor Vessel, Internals, and Reactor Coolant System

Item Number	Component	Aging Effect/Mechanism	Aging Management Programs	Further Evaluation Recommended	Discussion
3.1.1-25	Stainless steel jet pump sensing line	Cracking due to cyclic loading	A plant-specific aging management program is to be evaluated.	Yes, plant specific	Not applicable. See subsection 3.1.2.2.8.1
3.1.1-26	Steel and stainless steel isolation condenser components exposed to reactor coolant	Cracking due to cyclic loading	Inservice Inspection (IWB, IWC, and IWD) and plant-specific verification program	Yes, detection of aging effects is to be evaluated	Not applicable. See subsection 3.1.2.2.8.2
3.1.1-27	PWR Only				
3.1.1-28	PWR Only				
3.1.1-29	Stainless steel steam dryers exposed to reactor coolant	Cracking due to flow-induced vibration	A plant-specific aging management program is to be evaluated.	Yes, plant specific	The BWR Vessel Internals program, B.2.1.9, will be used to manage the effects of cracking due to flow-induced vibration of the cast austenitic stainless steel and stainless steel for the steam dryers exposed to reactor coolant. See subsection 3.1.2.2.11.
3.1.1-30	PWR Only				
3.1.1-31	PWR Only				

Table 3.1.1 Summary of Aging Management Evaluations for the Reactor Vessel, Internals, and Reactor Coolant System

Item Number	Component	Aging Effect/Mechanism	Aging Management Programs	Further Evaluation Recommended	Discussion
3.1.1-32	PWR Only				
3.1.1-33	PWR Only				
3.1.1-34	PWR Only				
3.1.1-35	PWR Only				
3.1.1-36	PWR Only				
3.1.1-37	PWR Only				
3.1.1-38	Steel (with or without stainless steel cladding) control rod drive return line nozzles exposed to reactor coolant	Cracking due to cyclic loading	BWR CR Drive Return Line Nozzle	No	Consistent with NUREG-1801. The BWR Control Rod Drive Return Line Nozzle program, B.2.1.6, will be used to manage cracking due to cyclic loading of the steel with stainless steel cladding control rod drive return line nozzle exposed to reactor coolant in the Reactor Pressure Vessel.
3.1.1-39	Steel (with or without stainless steel cladding) feedwater nozzles exposed to reactor coolant	Cracking due to cyclic loading	BWR Feedwater Nozzle	No	Consistent with NUREG-1801. The BWR Feedwater Nozzle program, B.2.1.5, will be used to manage cracking due to cyclic loading of the low alloy steel feedwater nozzles exposed to reactor coolant in the Reactor Pressure Vessel.

Table 3.1.1 Summary of Aging Management Evaluations for the Reactor Vessel, Internals, and Reactor Coolant System

Item Number	Component	Aging Effect/Mechanism	Aging Management Programs	Further Evaluation Recommended	Discussion
3.1.1-40	Stainless steel and nickel alloy penetrations for control rod drive stub tubes instrumentation, jet pump instrument, standby liquid control, flux monitor, and drain line exposed to reactor coolant	Cracking due to stress corrosion cracking, Intergranular stress corrosion cracking, cyclic loading	BWR Penetrations and Water Chemistry	No	Consistent with NUREG-1801 with exceptions. The BWR Penetrations, B.2.1.8, and Water Chemistry, B.2.1.2, will be used to manage cracking due to stress corrosion cracking of the nickel alloy welds on nozzles exposed to reactor coolant in the Reactor Pressure Vessel. Exceptions apply to the NUREG-1801 recommendations for Water Chemistry program implementation.
3.1.1-41	Stainless steel and nickel alloy piping, piping components, and piping elements greater than or equal to 4 NPS; nozzle safe ends and associated welds	Cracking due to stress corrosion cracking and intergranular stress corrosion cracking	BWR Stress Corrosion Cracking and Water Chemistry	No	Consistent with NUREG-1801 with exceptions. The BWR Stress Corrosion Cracking program, B.2.1.7, and Water Chemistry, B.2.1.2, will be used to manage cracking due to stress corrosion cracking of the cast austenitic stainless steel, stainless steel, and nickel alloy for the nozzle safe ends and welds, piping, piping elements and piping components, and reactor coolant pressure boundary components exposed to reactor coolant, treated water and steam in the Reactor Pressure Vessel, and Reactor Recirculation System. Exceptions apply to the NUREG-1801 recommendations for Water Chemistry program implementation. Components in the Reactor Pressure Vessel,

Table 3.1.1 Summary of Aging Management Evaluations for the Reactor Vessel, Internals, and Reactor Coolant System

Item Number	Component	Aging Effect/Mechanism	Aging Management Programs	Further Evaluation Recommended	Discussion
					and Reactor Recirculation System have been aligned to this item number based on material, environment and aging effect. The ASME Section XI Inservice Inspection, Subsections IWB, IWC, and IWD, B.2.1.1, program will be substituted to manage cracking due to stress corrosion cracking of the steel with stainless steel cladding, stainless steel, and nickel alloy for nozzles (CRD return, core spray, jet pump instrumentation, recirculation inlet and outlet), penetrations (stub tubes, incore housings), and the reactor vessel bottom head, shell and shell flange exposed to reactor coolant. Components in the Main Steam System have been aligned to this item number based on material, environment and aging effect. The Water Chemistry, B.2.1.2, program will be used to manage cracking due to stress corrosion cracking of the cast austenitic stainless steel for the Class 1 flow element exposed to treated water for this system.

Table 3.1.1 Summary of Aging Management Evaluations for the Reactor Vessel, Internals, and Reactor Coolant System

Item Number	Component	Aging Effect/Mechanism	Aging Management Programs	Further Evaluation Recommended	Discussion
3.1.1-42	Stainless steel and nickel alloy vessel shell attachment welds exposed to reactor coolant	Cracking due to stress corrosion cracking and intergranular stress corrosion cracking	BWR Vessel ID Attachment Welds and Water Chemistry	No	Consistent with NUREG-1801 with exceptions. The BWR Vessel ID Attachment Welds, B.2.1.4, and Water Chemistry, B.2.1.2, programs will be used to manage cracking due to stress corrosion cracking of the nickel alloy and stainless steel vessel attachment welds exposed to reactor coolant in the Reactor Pressure Vessel. Exceptions apply to the NUREG-1801 recommendations for Water Chemistry program implementation.
3.1.1-43	Stainless steel fuel supports and control rod drive assemblies control rod drive housing exposed to reactor coolant	Cracking due to stress corrosion cracking and intergranular stress corrosion cracking	BWR Vessel Internals and Water Chemistry	No	Consistent with NUREG-1801 with exceptions. The BWR Vessel Internals, B.2.1.9, and Water Chemistry, B.2.1.2, will be used to manage cracking due to stress corrosion cracking and intergranular stress corrosion cracking of the cast austenitic stainless steel and stainless steel for the control rod drive housings and control rod guide tubes exposed to a reactor coolant environment in the Reactor Internals. Exceptions apply to the NUREG-1801 recommendations for Water Chemistry program implementation.

Table 3.1.1 Summary of Aging Management Evaluations for the Reactor Vessel, Internals, and Reactor Coolant System

Item Number	Component	Aging Effect/Mechanism	Aging Management Programs	Further Evaluation Recommended	Discussion
3.1.1-44	Stainless steel and nickel alloy core shroud, core plate, core plate bolts, support structure, top guide, core spray lines, spargers, jet pump assemblies, control rod drive housing, nuclear instrumentation guide tubes	Cracking due to stress corrosion cracking, intergranular stress corrosion cracking, irradiation-assisted stress corrosion cracking	BWR Vessel Internals and Water Chemistry	No	Consistent with NUREG-1801 with exceptions. The BWR Vessel Internals, B.2.1.9, and Water Chemistry, B.2.1.2, will be used to manage cracking due to stress corrosion cracking, intergranular stress corrosion cracking and irradiation-assisted stress corrosion cracking of the cast austenitic stainless steel, stainless steel and nickel alloy for the core shroud, core plate, core plate bolts, support structure, top guide, core spray lines, spargers, jet pump assemblies, control rod drive housing, nuclear instrumentation guide tubes, dry tubes monitor housings, orificed fuel supports and steam dryers exposed to reactor coolant and reactor coolant and neutron flux in the Reactor Internals. The combined programs are also credited to manage cracking due to stress corrosion cracking of the stainless steel for the thermal sleeves associated with the core spray, feedwater, low pressure coolant injection, and reactor recirculation inlet nozzles exposed to reactor coolant and reactor coolant and neutron flux in the Reactor Pressure Vessel. Exceptions apply to the NUREG-1801 recommendations for Water Chemistry program implementation.

Table 3.1.1 Summary of Aging Management Evaluations for the Reactor Vessel, Internals, and Reactor Coolant System

Item Number	Component	Aging Effect/Mechanism	Aging Management Programs	Further Evaluation Recommended	Discussion
3.1.1-45	Steel piping, piping components, and piping elements exposed to reactor coolant	Wall thinning due to flow-accelerated corrosion	Flow-Accelerated Corrosion	No	Consistent with NUREG-1801. The Flow-Accelerated Corrosion program, B.2.1.11, will be used to manage wall thinning due to flow-accelerated corrosion of the carbon steel Class 1 piping, fittings, branch connections and valve bodies exposed to treated water and steam in the Feedwater, Main Steam, and Reactor Water Cleanup Systems.
3.1.1-46	Nickel alloy core shroud and core plate access hole cover (mechanical covers)	Cracking due to stress corrosion cracking, intergranular stress corrosion cracking, irradiation-assisted stress corrosion cracking	Inservice Inspection (IWB, IWC, and IWD), and Water Chemistry	No	Not Applicable. The Hope Creek access hole covers are of a welded design, not a mechanical (bolted) design and are addressed under item 3.1.1-49 in this table.
3.1.1-47	Stainless steel and nickel-alloy reactor vessel internals exposed to reactor coolant	Loss of material due to pitting and crevice corrosion	Inservice Inspection (IWB, IWC, and IWD), and Water Chemistry	No	Consistent with NUREG-1801 with exceptions. The BWR Vessel Internals, B.2.1.9, and Water Chemistry program, B.2.1.2, will be used to manage the loss of material due to pitting and crevice corrosion of the cast austenitic stainless steel, stainless steel and nickel alloy for the reactor vessel internals exposed to reactor coolant and reactor coolant and neutron flux. Exceptions apply to the NUREG-1801

Table 3.1.1 Summary of Aging Management Evaluations for the Reactor Vessel, Internals, and Reactor Coolant System

Item Number	Component	Aging Effect/Mechanism	Aging Management Programs	Further Evaluation Recommended	Discussion
					recommendations for Water Chemistry program implementation. Components in the Reactor Internals have been aligned to this item number based on material, environment and aging effect. The BWR Vessel Internals, B.2.1.9, program will be substituted to manage the loss of material due to pitting and crevice corrosion of the cast austenitic stainless steel, stainless steel and nickel alloy for the reactor vessel internals exposed to reactor coolant and reactor coolant and neutron flux.
3.1.1-48	Steel and stainless steel Class 1 piping, fittings and branch connections < NPS 4 exposed to reactor coolant	Cracking due to stress corrosion cracking, intergranular stress corrosion cracking (for stainless steel only), and thermal and mechanical loading	Inservice Inspection (IWB, IWC, and IWD), Water chemistry, and One-Time Inspection of ASME Code Class 1 Small-bore Piping	No	Consistent with NUREG-1801 with exceptions. The ASME Section XI Inservice Inspection program, Subsections IWB, IWC, and IWD, B.2.1.1, and Water Chemistry program, B.2.1.2, will be used to manage cracking due to stress corrosion cracking (stainless steel), and thermal and mechanical loading of the steel and stainless steel for the Class 1 piping, fittings, and branch connections < NPS 4" exposed to treated water and steam. These components are in the Core Spray, Feedwater, High Pressure Coolant Injection, Main Steam, Nuclear Boiler Instrumentation, Reactor Core Isolation Cooling, Reactor Recirculation, Reactor Water Cleanup, Residual Heat Removal and Standby Liquid Control

Table 3.1.1 Summary of Aging Management Evaluations for the Reactor Vessel, Internals, and Reactor Coolant System

Item Number	Component	Aging Effect/Mechanism	Aging Management Programs	Further Evaluation Recommended	Discussion
					Systems. Hope Creek has experienced cracking of ASME Code Class 1 small-bore piping resulting from thermal and mechanical cyclic loading. Because of this, the Small-Bore Class 1 Piping Inspection, B.2.2.6, is credited to manage cracking due to thermal and mechanical loading of Class 1 small-bore piping in lieu of the NUREG-1801 program XI.M35, "One Time Inspection of ASME Code Class 1 Small-Bore Piping" Exceptions apply to the NUREG-1801 recommendations for Water Chemistry program implementation. Components in the Core Spray, Feedwater, High Pressure Coolant Injection, Main Steam, Nuclear Boiler Instrumentation, Reactor Core Isolation Cooling, Reactor Recirculation, Reactor Water Cleanup, Residual Heat Removal and Standby Liquid Control Systems have been aligned to this item number based on material, environment and aging effect. The ASME Section XI Inservice Inspection program, Subsections IWB, IWC, and IWD, B.2.1.1, the Water Chemistry program, B.2.1.2, will be used and the Small-Bore Class 1 Piping Inspection program B.2.2.6 will be substituted to manage cracking due to stress corrosion

Table 3.1.1 Summary of Aging Management Evaluations for the Reactor Vessel, Internals, and Reactor Coolant System

Item Number	Component	Aging Effect/Mechanism	Aging Management Programs	Further Evaluation Recommended	Discussion
					cracking (stainless steel), and thermal and mechanical loading of the steel and stainless steel for the Class 1 piping, fittings, and branch connections < NPS 4" exposed to treated water and steam. Components in the Core Spray, High Pressure Coolant Injection, Main Steam, Nuclear Boiler Instrumentation, Reactor Core Isolation Cooling, Reactor Recirculation, Reactor Water Cleanup, Residual Heat Removal and Standby Liquid Control Systems have been aligned to this item number based on material, environment and aging effect. The ASME Section XI Inservice Inspection program, Subsections IWB, IWC, and IWD, B.2.1.1, and the Water Chemistry program, B.2.1.2 will be substituted to manage cracking due to stress corrosion cracking of the stainless steel piping elements and piping components (condensing chambers, flow devices, restricting orifices, thermowells, and valve bodies) exposed to treated water and steam.
3.1.1-49	Nickel alloy core shroud and core plate access hole cover (welded covers)	Cracking due to stress corrosion cracking, intergranular stress corrosion cracking, irradiation-assisted	Inservice Inspection (IWB, IWC, and IWD), Water Chemistry, and, for BWRs with a crevice in the	No	Consistent with NUREG-1801 with exceptions. The BWR Vessel Internals, B.2.1.9, and Water Chemistry, B.2.1.2, programs will be used to manage cracking due to stress corrosion cracking, intergranular stress corrosion cracking,

Table 3.1.1 Summary of Aging Management Evaluations for the Reactor Vessel, Internals, and Reactor Coolant System

Item Number	Component	Aging Effect/Mechanism	Aging Management Programs	Further Evaluation Recommended	Discussion
		stress corrosion cracking	access hole covers, augmented inspection using UT or other demonstrated acceptable inspection of the access hole cover welds		irradiation-assisted stress corrosion cracking of the nickel alloy core shroud and core plate access hole cover (welded covers) exposed to reactor coolant in the Reactor Internals. The access hole covers at Hope Creek are of the non-creviced design. Exceptions apply to the NUREG-1801 recommendations for Water Chemistry program implementation. Components in the Reactor Internals have been aligned to this item number based on material, environment and aging effect. The BWR Vessel Internals program, B.2.1.9, will be substituted to manage cracking due to stress corrosion cracking, intergranular stress corrosion cracking, irradiation-assisted stress corrosion cracking of the nickel alloy core shroud and core plate access hole cover (welded covers) exposed to reactor coolant in the Reactor Internals.

Table 3.1.1 Summary of Aging Management Evaluations for the Reactor Vessel, Internals, and Reactor Coolant System

Item Number	Component	Aging Effect/Mechanism	Aging Management Programs	Further Evaluation Recommended	Discussion
3.1.1-50	High-strength low alloy steel top head closure studs and nuts exposed to air with reactor coolant leakage	Cracking due to stress corrosion cracking and intergranular stress corrosion cracking	Reactor Head Closure Studs	No	Consistent with NUREG-1801. The Reactor Head Closure Studs program, B.2.1.3, will be used to manage cracking due to stress corrosion cracking of the high-strength low alloy steel bolting with yield strength of 150 ksi or greater for the reactor head closure studs exposed to air in the Reactor Pressure Vessel.
3.1.1-51	Cast austenitic stainless steel jet pump assembly castings; orificed fuel support	Loss of fracture toughness due to thermal aging and neutron irradiation embrittlement	Thermal Aging and Neutron Irradiation Embrittlement of CASS	No	Consistent with NUREG-1801. The Thermal Aging and Neutron Irradiation Embrittlement of Cast Austenitic Stainless Steel (CASS) program, B.2.1.10, will be used to manage loss of fracture toughness due to thermal aging and neutron irradiation embrittlement of the cast austenitic stainless steel for the jet pump assemblies, core spray lines, spray rings, spray nozzles and thermal sleeves, control rod guide tubes, orificed fuel supports, and steam dryers exposed to reactor coolant and reactor coolant and neutron flux in the Reactor Internals.
3.1.1-52	Steel and stainless steel reactor coolant pressure boundary (RCPB) pump and valve closure bolting, manway and holding bolting, flange bolting, and closure bolting in high-	Cracking due to stress corrosion cracking, loss of material due to wear, loss of preload due to thermal effects, gasket	Bolting Integrity	No	Consistent with NUREG-1801 with exceptions. The Bolting Integrity program, B.2.1.7, will be used to manage the loss of preload due to thermal effects, gasket creep, and self-loosening of the carbon and low alloy steel, and stainless steel bolting exposed to air in the Condensate Storage

Table 3.1.1 Summary of Aging Management Evaluations for the Reactor Vessel, Internals, and Reactor Coolant System

Item Number	Component	Aging Effect/Mechanism	Aging Management Programs	Further Evaluation Recommended	Discussion
	pressure and high-temperature systems	creep, and self-loosening			and Transfer, Core Spray, Feedwater, Fire Protection, Fuel Pool Cooling and Cleanup, High Pressure Coolant Injection, Hydrogen and Oxygen Analyzer, Main Steam, Nuclear Boiler Instrumentation, Process and Post-Accident Sampling, Reactor Core Isolation Cooling, Reactor Pressure Vessel, Reactor Recirculation, Reactor Water Cleanup, Residual Heat Removal, Service Water, Standby Diesel Generators and Auxiliary, and Standby Liquid Control Systems. Exceptions apply to the NUREG-1801 recommendations for the Bolting Integrity program implementation. Components in the Cranes & Hoists and Fuel Handling and Storage Systems have been aligned to this item number based on material, environment and aging effect. The Inspection of Overhead Heavy Load and Light Load (Related to Refueling) Handling Systems program, B.2.1.15, will be substituted to manage loss of preload due to self-loosening of the carbon and low alloy steel and stainless steel bolting for these systems and/or structures. Components in the Primary Containment have been aligned to this item number based on material, environment and aging effect. The Structures Monitoring program, B.2.1.32,

Table 3.1.1 Summary of Aging Management Evaluations for the Reactor Vessel, Internals, and Reactor Coolant System

Item Number	Component	Aging Effect/Mechanism	Aging Management Programs	Further Evaluation Recommended	Discussion
					will be substituted to manage loss of preload due to self-loosening of the stainless steel structural bolting for the Primary Containment.
3.1.1-53	Steel piping, piping components, and piping elements exposed to closed cycle cooling water	Loss of material due to general, pitting and crevice corrosion	Closed-Cycle Cooling Water System	No	Not applicable. There is no steel piping, piping components, or piping elements exposed to closed cycle cooling water in Nuclear Boiler Instrumentation, Reactor Internals, Reactor Pressure Vessel, and the Reactor Recirculation System.
3.1.1-54	Copper alloy piping, piping components, and piping elements exposed to closed cycle cooling water	Loss of material due to pitting, crevice, and galvanic corrosion	Closed-Cycle Cooling Water System	No	Not applicable. There are no copper alloy piping, piping components, or piping elements exposed to closed cycle cooling water in Nuclear Boiler Instrumentation, Reactor Internals, Reactor Pressure Vessel, and the Reactor Recirculation System.

Table 3.1.1 Summary of Aging Management Evaluations for the Reactor Vessel, Internals, and Reactor Coolant System

Item Number	Component	Aging Effect/Mechanism	Aging Management Programs	Further Evaluation Recommended	Discussion
3.1.1-55	Cast austenitic stainless steel Class 1 pump casings, and valve bodies and bonnets exposed to reactor coolant >250°C (>482°F)	Loss of fracture toughness due to thermal aging embrittlement	Inservice inspection (IWB, IWC, and IWD). Thermal aging susceptibility screening is not necessary, inservice inspection requirements are sufficient for managing these aging effects. ASME Code Case N-481 also provides an alternative for pump casings.	No	Consistent with NUREG-1801. The ASME Section XI Inservice Inspection program, Subsections IWB, IWC, and IWD, B.2.1.1, will be used to manage the loss of fracture toughness due to thermal aging embrittlement in cast austenitic stainless steel Class 1 pump casings and valve bodies exposed to treated water >482°F in the Reactor Recirculation System.
3.1.1-56	Copper alloy >15% Zn piping, piping components, and piping elements exposed to closed cycle cooling water	Loss of material due to selective leaching	Selective Leaching of Materials	No	Not applicable. There are no copper alloy >15% Zn piping, piping components, or piping elements exposed to closed cycle cooling water in Nuclear Boiler Instrumentation, Reactor Internals, Reactor Pressure Vessel, and the Reactor Recirculation System.
3.1.1-57	Cast austenitic stainless steel Class 1 piping, piping component, and piping elements and control rod drive pressure housings	Loss of fracture toughness due to thermal aging embrittlement	Thermal Aging Embrittlement of CASS	No	Not applicable. With the exception of the Class 1 pump casings and valve bodies, and reactor internals components, there are no other CASS piping, piping components, or piping elements in Nuclear Boiler

Table 3.1.1 Summary of Aging Management Evaluations for the Reactor Vessel, Internals, and Reactor Coolant System

Item Number	Component	Aging Effect/Mechanism	Aging Management Programs	Further Evaluation Recommended	Discussion
	exposed to reactor coolant >250°C (>482°F)				Instrumentation, Reactor Internals, Reactor Pressure Vessel, and the Reactor Recirculation System exposed to reactor coolant >250°C (>482°F) that require aging management for loss of fracture toughness due to thermal aging embrittlement. The loss of fracture toughness due to thermal aging embrittlement in CASS Class 1 pump casings and valve bodies is addressed by Item number 3.1.1-55. The loss of fracture toughness due to thermal aging and neutron irradiation embrittlement of CASS for the reactor internals components is addressed by Item number 3.1.1-51. The Class 1 CASS flow restrictor nozzles in the Main Steam System are not susceptible thermal embrittlement because the nozzles were cast by a centrifugal casting method using low molybdenum stainless material (SA 351 CF8). In accordance with the guidance provided in the NUREG 1801, Volume 2., Section XI.M12, the centrifugally cast, low molybdenum CASS portion of the flow restrictors is not susceptible to thermal aging embrittlement.
3.1.1-58	PWR Only				

Table 3.1.1 Summary of Aging Management Evaluations for the Reactor Vessel, Internals, and Reactor Coolant System

Item Number	Component	Aging Effect/Mechanism	Aging Management Programs	Further Evaluation Recommended	Discussion
3.1.1-59	PWR Only				
3.1.1-60	PWR Only				
3.1.1-61	PWR Only				
3.1.1-62	PWR Only				
3.1.1-63	PWR Only				
3.1.1-64	PWR Only				
3.1.1-65	PWR Only				
3.1.1-66	PWR Only				
3.1.1-67	PWR Only				
3.1.1-68	PWR Only				
3.1.1-69	PWR Only				
3.1.1-70	PWR Only				
3.1.1-71	PWR Only				

Table 3.1.1 Summary of Aging Management Evaluations for the Reactor Vessel, Internals, and Reactor Coolant System

Item Number	Component	Aging Effect/Mechanism	Aging Management Programs	Further Evaluation Recommended	Discussion
3.1.1-72	PWR Only				
3.1.1-73	PWR Only				
3.1.1-74	PWR Only				
3.1.1-75	PWR Only				
3.1.1-76	PWR Only				
3.1.1-77	PWR Only				
3.1.1-78	PWR Only				
3.1.1-79	PWR Only				
3.1.1-80	PWR Only				
3.1.1-81	PWR Only				
3.1.1-82	PWR Only				
3.1.1-83	PWR Only				
3.1.1-84	PWR Only				

Table 3.1.1 Summary of Aging Management Evaluations for the Reactor Vessel, Internals, and Reactor Coolant System

Item Number	Component	Aging Effect/Mechanism	Aging Management Programs	Further Evaluation Recommended	Discussion
3.1.1-85	Nickel alloy piping, piping components, and piping elements exposed to air – indoor uncontrolled (external)	None	None	NA - No AEM or AMP	Consistent with NUREG-1801.
3.1.1-86	Stainless steel piping, piping components, and piping elements exposed to air – indoor uncontrolled (External); air with borated water leakage; concrete; gas	None	None	NA - No AEM or AMP	Consistent with NUREG-1801.
3.1.1-87	Steel piping, piping components, and piping elements in concrete	None	None	NA - No AEM or AMP	Not applicable. There is no steel piping, piping components, and piping elements exposed to concrete in Nuclear Boiler Instrumentation, Reactor Internals, Reactor Pressure Vessel, and the Reactor Recirculation System.

Table 3.1.2-1
Nuclear Boiler Instrumentation
Summary of Aging Management Evaluation

Table 3.1.2-1 Nuclear Boiler Instrumentation

Component Type	Intended Function	Material	Environment	Aging Effect Requiring Management	Aging Management Programs	NUREG-1801 Vol. 2 Item	Table 1 Item	Notes
Bolting	Mechanical Closure	Carbon and Low Alloy Steel Bolting	Air - Indoor (External)	Loss of Material/General, Pitting and Crevice Corrosion	Bolting Integrity	V.E-4	3.2.1-23	B
Bolting	Mechanical Closure	Carbon and Low Alloy Steel Bolting	Air - Indoor (External)	Loss of Preload/Thermal Effects, Gasket Creep, and Self-Loosening	Bolting Integrity	IV.C1-10	3.1.1-52	B
Bolting (Class 1)	Mechanical Closure	Carbon and Low Alloy Steel Bolting	Air - Indoor (External)	Cumulative Fatigue Damage/Fatigue	TLAA	IV.C1-11	3.1.1-4	A, 1
Bolting (Class 1)	Mechanical Closure	Carbon and Low Alloy Steel Bolting	Air - Indoor (External)	Loss of Material/General, Pitting and Crevice Corrosion	Bolting Integrity	V.E-4	3.2.1-23	B
Bolting (Class 1)	Mechanical Closure	Carbon and Low Alloy Steel Bolting	Air - Indoor (External)	Loss of Preload/Thermal Effects, Gasket Creep, and Self-Loosening	Bolting Integrity	IV.C1-10	3.1.1-52	B
Class 1 Piping, Fittings and Branch Connections < NPS 4"	Pressure Boundary	Carbon Steel	Air - Indoor (External)	Loss of Material/General Corrosion	External Surfaces Monitoring	V.E-7	3.2.1-31	A
Class 1 Piping, Fittings and Branch Connections < NPS 4"	Pressure Boundary	Carbon Steel	Steam (Internal)	Cracking/Thermal and Mechanical Loading	ASME Section XI Inservice Inspection, Subsections IWB, IWC, and IWD	IV.C1-1	3.1.1-48	A
Class 1 Piping, Fittings and Branch Connections < NPS 4"	Pressure Boundary	Carbon Steel	Steam (Internal)	Cracking/Thermal and Mechanical Loading	Small-Bore Class 1 Piping Inspection	IV.C1-1	3.1.1-48	E, 2

Table 3.1.2-1 Nuclear Boiler Instrumentation (Continued)

Component Type	Intended Function	Material	Environment	Aging Effect Requiring Management	Aging Management Programs	NUREG-1801 Vol. 2 Item	Table 1 Item	Notes
Class 1 Piping, Fittings and Branch Connections < NPS 4"	Pressure Boundary	Carbon Steel	Steam (Internal)	Cracking/Thermal and Mechanical Loading	Water Chemistry	IV.C1-1	3.1.1-48	B
Class 1 Piping, Fittings and Branch Connections < NPS 4"	Pressure Boundary	Carbon Steel	Steam (Internal)	Cumulative Fatigue Damage/Fatigue	TLAA	IV.C1-15	3.1.1-3	A, 1
Class 1 Piping, Fittings and Branch Connections < NPS 4"	Pressure Boundary	Carbon Steel	Steam (Internal)	Loss of Material/Galvanic Corrosion	One-Time Inspection	VIII.E-7	3.4.1-5	C
Class 1 Piping, Fittings and Branch Connections < NPS 4"	Pressure Boundary	Carbon Steel	Steam (Internal)	Loss of Material/Galvanic Corrosion	Water Chemistry	VIII.E-7	3.4.1-5	D
Class 1 Piping, Fittings and Branch Connections < NPS 4"	Pressure Boundary	Carbon Steel	Steam (Internal)	Loss of Material/General, Pitting and Crevice Corrosion	One-Time Inspection	IV.C1-6	3.1.1-13	C
Class 1 Piping, Fittings and Branch Connections < NPS 4"	Pressure Boundary	Carbon Steel	Steam (Internal)	Loss of Material/General, Pitting and Crevice Corrosion	Water Chemistry	IV.C1-6	3.1.1-13	D
Class 1 Piping, Fittings and Branch Connections < NPS 4"	Pressure Boundary	Carbon Steel	Treated Water (Internal)	Cracking/Thermal and Mechanical Loading	ASME Section XI Inservice Inspection, Subsections IWB, IWC, and IWD	IV.C1-1	3.1.1-48	A
Class 1 Piping, Fittings and Branch Connections < NPS 4"	Pressure Boundary	Carbon Steel	Treated Water (Internal)	Cracking/Thermal and Mechanical Loading	Small-Bore Class 1 Piping Inspection	IV.C1-1	3.1.1-48	E, 2
Class 1 Piping, Fittings and Branch Connections < NPS 4"	Pressure Boundary	Carbon Steel	Treated Water (Internal)	Cracking/Thermal and Mechanical Loading	Water Chemistry	IV.C1-1	3.1.1-48	B

Table 3.1.2-1 Nuclear Boiler Instrumentation (Continued)

Component Type	Intended Function	Material	Environment	Aging Effect Requiring Management	Aging Management Programs	NUREG-1801 Vol. 2 Item	Table 1 Item	Notes
Class 1 Piping, Fittings and Branch Connections < NPS 4"	Pressure Boundary	Carbon Steel	Treated Water (Internal)	Cumulative Fatigue Damage/Fatigue	TLAA	IV.C1-15	3.1.1-3	A, 1
Class 1 Piping, Fittings and Branch Connections < NPS 4"	Pressure Boundary	Carbon Steel	Treated Water (Internal)	Loss of Material/Galvanic Corrosion	One-Time Inspection	VIII.E-7	3.4.1-5	C
Class 1 Piping, Fittings and Branch Connections < NPS 4"	Pressure Boundary	Carbon Steel	Treated Water (Internal)	Loss of Material/Galvanic Corrosion	Water Chemistry	VIII.E-7	3.4.1-5	D
Class 1 Piping, Fittings and Branch Connections < NPS 4"	Pressure Boundary	Carbon Steel	Treated Water (Internal)	Loss of Material/General, Pitting and Crevice Corrosion	One-Time Inspection	IV.C1-6	3.1.1-13	C
Class 1 Piping, Fittings and Branch Connections < NPS 4"	Pressure Boundary	Carbon Steel	Treated Water (Internal)	Loss of Material/General, Pitting and Crevice Corrosion	Water Chemistry	IV.C1-6	3.1.1-13	D
Class 1 Piping, Fittings and Branch Connections < NPS 4"	Pressure Boundary	Stainless Steel	Air - Indoor (External)	None	None	IV.E-2	3.1.1-86	A
Class 1 Piping, Fittings and Branch Connections < NPS 4"	Pressure Boundary	Stainless Steel	Steam (Internal)	Cracking/Stress Corrosion Cracking, Thermal and Mechanical Loading	ASME Section XI Inservice Inspection, Subsections IWB, IWC, and IWD	IV.C1-1	3.1.1-48	A
Class 1 Piping, Fittings and Branch Connections < NPS 4"	Pressure Boundary	Stainless Steel	Steam (Internal)	Cracking/Stress Corrosion Cracking, Thermal and Mechanical Loading	Small-Bore Class 1 Piping Inspection	IV.C1-1	3.1.1-48	E, 2
Class 1 Piping, Fittings and Branch Connections < NPS 4"	Pressure Boundary	Stainless Steel	Steam (Internal)	Cracking/Stress Corrosion Cracking, Thermal and Mechanical Loading	Water Chemistry	IV.C1-1	3.1.1-48	B

Table 3.1.2-1 Nuclear Boiler Instrumentation (Continued)

Component Type	Intended Function	Material	Environment	Aging Effect Requiring Management	Aging Management Programs	NUREG-1801 Vol. 2 Item	Table 1 Item	Notes
Class 1 Piping, Fittings and Branch Connections < NPS 4"	Pressure Boundary	Stainless Steel	Steam (Internal)	Cumulative Fatigue Damage/Fatigue	TLAA	IV.C1-15	3.1.1-3	A, 1
Class 1 Piping, Fittings and Branch Connections < NPS 4"	Pressure Boundary	Stainless Steel	Steam (Internal)	Loss of Material/Pitting and Crevice Corrosion	One-Time Inspection	IV.C1-14	3.1.1-15	A
Class 1 Piping, Fittings and Branch Connections < NPS 4"	Pressure Boundary	Stainless Steel	Steam (Internal)	Loss of Material/Pitting and Crevice Corrosion	Water Chemistry	IV.C1-14	3.1.1-15	B
Class 1 Piping, Fittings and Branch Connections < NPS 4"	Pressure Boundary	Stainless Steel	Treated Water (Internal) > 140 F	Cracking/Stress Corrosion Cracking, Thermal and Mechanical Loading	ASME Section XI Inservice Inspection, Subsections IWB, IWC, and IWD	IV.C1-1	3.1.1-48	A
Class 1 Piping, Fittings and Branch Connections < NPS 4"	Pressure Boundary	Stainless Steel	Treated Water (Internal) > 140 F	Cracking/Stress Corrosion Cracking, Thermal and Mechanical Loading	Small-Bore Class 1 Piping Inspection	IV.C1-1	3.1.1-48	E, 2
Class 1 Piping, Fittings and Branch Connections < NPS 4"	Pressure Boundary	Stainless Steel	Treated Water (Internal) > 140 F	Cracking/Stress Corrosion Cracking, Thermal and Mechanical Loading	Water Chemistry	IV.C1-1	3.1.1-48	B
Class 1 Piping, Fittings and Branch Connections < NPS 4"	Pressure Boundary	Stainless Steel	Treated Water (Internal) > 140 F	Cumulative Fatigue Damage/Fatigue	TLAA	IV.C1-15	3.1.1-3	A, 1
Class 1 Piping, Fittings and Branch Connections < NPS 4"	Pressure Boundary	Stainless Steel	Treated Water (Internal) > 140 F	Loss of Material/Pitting and Crevice Corrosion	One-Time Inspection	IV.C1-14	3.1.1-15	A
Class 1 Piping, Fittings and Branch Connections < NPS 4"	Pressure Boundary	Stainless Steel	Treated Water (Internal) > 140 F	Loss of Material/Pitting and Crevice Corrosion	Water Chemistry	IV.C1-14	3.1.1-15	B

Table 3.1.2-1 Nuclear Boiler Instrumentation (Continued)

Component Type	Intended Function	Material	Environment	Aging Effect Requiring Management	Aging Management Programs	NUREG-1801 Vol. 2 Item	Table 1 Item	Notes
Condensing Chamber (Class 1)	Pressure Boundary	Stainless Steel	Air - Indoor (External)	None	None	IV.E-2	3.1.1-86	A
Condensing Chamber (Class 1)	Pressure Boundary	Stainless Steel	Steam (Internal)	Cracking/Stress Corrosion Cracking	ASME Section XI Inservice Inspection, Subsections IWB, IWC, and IWD	IV.C1-1	3.1.1-48	E, 3
Condensing Chamber (Class 1)	Pressure Boundary	Stainless Steel	Steam (Internal)	Cracking/Stress Corrosion Cracking	Water Chemistry	IV.C1-1	3.1.1-48	E, 3
Condensing Chamber (Class 1)	Pressure Boundary	Stainless Steel	Steam (Internal)	Loss of Material/Pitting and Crevice Corrosion	One-Time Inspection	IV.C1-14	3.1.1-15	A
Condensing Chamber (Class 1)	Pressure Boundary	Stainless Steel	Steam (Internal)	Loss of Material/Pitting and Crevice Corrosion	Water Chemistry	IV.C1-14	3.1.1-15	B
Condensing Chamber (Class 1)	Pressure Boundary	Stainless Steel	Treated Water (Internal) > 140 F	Cracking/Stress Corrosion Cracking	ASME Section XI Inservice Inspection, Subsections IWB, IWC, and IWD	IV.C1-1	3.1.1-48	E, 3
Condensing Chamber (Class 1)	Pressure Boundary	Stainless Steel	Treated Water (Internal) > 140 F	Cracking/Stress Corrosion Cracking	Water Chemistry	IV.C1-1	3.1.1-48	E, 3
Condensing Chamber (Class 1)	Pressure Boundary	Stainless Steel	Treated Water (Internal) > 140 F	Loss of Material/Pitting and Crevice Corrosion	One-Time Inspection	IV.C1-14	3.1.1-15	A
Condensing Chamber (Class 1)	Pressure Boundary	Stainless Steel	Treated Water (Internal) > 140 F	Loss of Material/Pitting and Crevice Corrosion	Water Chemistry	IV.C1-14	3.1.1-15	B
Piping and Fittings	Leakage Boundary	Stainless Steel	Air - Indoor (External)	None	None	IV.E-2	3.1.1-86	A
Piping and Fittings	Leakage Boundary	Stainless Steel	Treated Water (Internal)	Loss of Material/Pitting and Crevice Corrosion	One-Time Inspection	IV.C1-14	3.1.1-15	A
Piping and Fittings	Leakage Boundary	Stainless Steel	Treated Water (Internal)	Loss of Material/Pitting and Crevice Corrosion	Water Chemistry	IV.C1-14	3.1.1-15	B
Piping and Fittings	Pressure Boundary	Carbon Steel	Air - Indoor (External)	Loss of Material/General Corrosion	External Surfaces Monitoring	V.E-7	3.2.1-31	A
Piping and Fittings	Pressure Boundary	Carbon Steel	Steam (Internal)	Cumulative Fatigue Damage/Fatigue	TLAA	IV.C1-15	3.1.1-3	A, 1
Piping and Fittings	Pressure Boundary	Carbon Steel	Steam (Internal)	Loss of Material/General, Pitting and Crevice Corrosion	One-Time Inspection	IV.C1-6	3.1.1-13	C

Table 3.1.2-1 Nuclear Boiler Instrumentation (Continued)

Component Type	Intended Function	Material	Environment	Aging Effect Requiring Management	Aging Management Programs	NUREG-1801 Vol. 2 Item	Table 1 Item	Notes
Piping and Fittings	Pressure Boundary	Carbon Steel	Steam (Internal)	Loss of Material/General, Pitting and Crevice Corrosion	Water Chemistry	IV.C1-6	3.1.1-13	D
Piping and Fittings	Pressure Boundary	Stainless Steel	Air - Indoor (External)	None	None	IV.E-2	3.1.1-86	A
Piping and Fittings	Pressure Boundary	Stainless Steel	Air/Gas - Wetted (Internal)	Loss of Material/Pitting and Crevice Corrosion	Periodic Inspection	V.D2-35	3.2.1-8	E, 4
Piping and Fittings	Pressure Boundary	Stainless Steel	Treated Water (Internal)	Loss of Material/Pitting and Crevice Corrosion	One-Time Inspection	IV.C1-14	3.1.1-15	A
Piping and Fittings	Pressure Boundary	Stainless Steel	Treated Water (Internal)	Loss of Material/Pitting and Crevice Corrosion	Water Chemistry	IV.C1-14	3.1.1-15	B
Restricting Orifices (Class 1)	Pressure Boundary	Stainless Steel	Air - Indoor (External)	None	None	IV.E-2	3.1.1-86	A
Restricting Orifices (Class 1)	Pressure Boundary	Stainless Steel	Treated Water (Internal) > 140 F	Cracking/Stress Corrosion Cracking	ASME Section XI Inservice Inspection, Subsections IWB, IWC, and IWD	IV.C1-1	3.1.1-48	E, 3
Restricting Orifices (Class 1)	Pressure Boundary	Stainless Steel	Treated Water (Internal) > 140 F	Cracking/Stress Corrosion Cracking	Water Chemistry	IV.C1-1	3.1.1-48	E, 3
Restricting Orifices (Class 1)	Pressure Boundary	Stainless Steel	Treated Water (Internal) > 140 F	Loss of Material/Pitting and Crevice Corrosion	One-Time Inspection	IV.C1-14	3.1.1-15	A
Restricting Orifices (Class 1)	Pressure Boundary	Stainless Steel	Treated Water (Internal) > 140 F	Loss of Material/Pitting and Crevice Corrosion	Water Chemistry	IV.C1-14	3.1.1-15	B
Restricting Orifices (Class 1)	Throttle	Stainless Steel	Air - Indoor (External)	None	None	IV.E-2	3.1.1-86	A
Restricting Orifices (Class 1)	Throttle	Stainless Steel	Treated Water (Internal) > 140 F	Cracking/Stress Corrosion Cracking	ASME Section XI Inservice Inspection, Subsections IWB, IWC, and IWD	IV.C1-1	3.1.1-48	E, 3
Restricting Orifices (Class 1)	Throttle	Stainless Steel	Treated Water (Internal) > 140 F	Cracking/Stress Corrosion Cracking	Water Chemistry	IV.C1-1	3.1.1-48	E, 3
Restricting Orifices (Class 1)	Throttle	Stainless Steel	Treated Water (Internal) > 140 F	Loss of Material/Pitting and Crevice Corrosion	One-Time Inspection	IV.C1-14	3.1.1-15	A
Restricting Orifices (Class 1)	Throttle	Stainless Steel	Treated Water (Internal) > 140 F	Loss of Material/Pitting and Crevice Corrosion	Water Chemistry	IV.C1-14	3.1.1-15	B

Table 3.1.2-1 Nuclear Boiler Instrumentation (Continued)

Component Type	Intended Function	Material	Environment	Aging Effect Requiring Management	Aging Management Programs	NUREG-1801 Vol. 2 Item	Table 1 Item	Notes
Valve Body	Leakage Boundary	Stainless Steel	Air - Indoor (External)	None	None	IV.E-2	3.1.1-86	A
Valve Body	Leakage Boundary	Stainless Steel	Treated Water (Internal)	Loss of Material/Pitting and Crevice Corrosion	One-Time Inspection	IV.C1-14	3.1.1-15	A
Valve Body	Leakage Boundary	Stainless Steel	Treated Water (Internal)	Loss of Material/Pitting and Crevice Corrosion	Water Chemistry	IV.C1-14	3.1.1-15	B
Valve Body	Pressure Boundary	Carbon Steel	Air - Indoor (External)	Loss of Material/General Corrosion	External Surfaces Monitoring	V.E-7	3.2.1-31	A
Valve Body	Pressure Boundary	Carbon Steel	Steam (Internal)	Loss of Material/General, Pitting and Crevice Corrosion	One-Time Inspection	IV.C1-6	3.1.1-13	C
Valve Body	Pressure Boundary	Carbon Steel	Steam (Internal)	Loss of Material/General, Pitting and Crevice Corrosion	Water Chemistry	IV.C1-6	3.1.1-13	D
Valve Body	Pressure Boundary	Stainless Steel	Air - Indoor (External)	None	None	IV.E-2	3.1.1-86	A
Valve Body	Pressure Boundary	Stainless Steel	Air/Gas - Wetted (Internal)	Loss of Material/Pitting and Crevice Corrosion	Periodic Inspection	V.D2-35	3.2.1-8	E, 4
Valve Body	Pressure Boundary	Stainless Steel	Treated Water (Internal)	Loss of Material/Pitting and Crevice Corrosion	One-Time Inspection	IV.C1-14	3.1.1-15	A
Valve Body	Pressure Boundary	Stainless Steel	Treated Water (Internal)	Loss of Material/Pitting and Crevice Corrosion	Water Chemistry	IV.C1-14	3.1.1-15	B
Valve Body (Class 1)	Pressure Boundary	Stainless Steel	Air - Indoor (External)	None	None	IV.E-2	3.1.1-86	A
Valve Body (Class 1)	Pressure Boundary	Stainless Steel	Treated Water (Internal)	Loss of Material/Pitting and Crevice Corrosion	One-Time Inspection	IV.C1-14	3.1.1-15	A
Valve Body (Class 1)	Pressure Boundary	Stainless Steel	Treated Water (Internal)	Loss of Material/Pitting and Crevice Corrosion	Water Chemistry	IV.C1-14	3.1.1-15	B

Notes	Definition of Note
A	Consistent with NUREG-1801 item for component, material, environment, and aging effect. AMP is consistent with NUREG-1801 AMP.
B	Consistent with NUREG-1801 item for component, material, environment, and aging effect. AMP takes some exceptions to NUREG-1801 AMP.
C	Component is different, but consistent with NUREG-1801 item for material, environment, and aging effect. AMP is consistent with NUREG-1801 AMP.
D	Component is different, but consistent with NUREG-1801 item for material, environment, and aging effect. AMP takes some exceptions to NUREG-1801 AMP.
E	Consistent with NUREG-1801 item for material, environment and aging effect, but a different aging management program is credited or NUREG-1801 identifies a plant-specific aging management program.
F	Material not in NUREG-1801 for this component.
G	Environment not in NUREG-1801 for this component and material.
H	Aging effect not in NUREG-1801 for this component, material and environment combination.
I	Aging effect in NUREG-1801 for this component, material and environment combination is not applicable.
J	Neither the component nor the material and environment combination is evaluated in NUREG-1801.

Plant Specific Notes:

1. The TLAA designation in the Aging Management Program column indicates fatigue of this component is evaluated in Section 4.3.

2. The NUREG-1801 "One-Time Inspection of ASME Code Class 1 Small-Bore Piping" aging management program is applicable only to plants that have not experienced cracking of ASME Code Class 1 small-bore piping. Based on previous Hope Creek operating experience with Class 1 small-bore pipe cracking, a new plant-specific periodic inspection program will be used. The "Small-Bore Class 1 Piping Inspection" aging management program is a plant-specific periodic program that will be implemented to manage cracking by periodic volumetric examinations of small-bore Class 1 piping.

3. The Water Chemistry and ASME Section XI In-Service Inspection, Subsections IWB, IWC, and IWD aging management programs will be used to manage the aging effect of cracking in restricting orifices, condensing chambers, and valve bodies <NPS 4".

4. The Periodic Inspection program is substituted to manage the aging effect(s) applicable to this component type, material, and environment combination.

Table 3.1.2-2
Reactor Internals
Summary of Aging Management Evaluation

Table 3.1.2-2 Reactor Internals

Component Type	Intended Function	Material	Environment	Aging Effect Requiring Management	Aging Management Programs	NUREG-1801 Vol. 2 Item	Table 1 Item	Notes
Core Shroud and Core Plate (Access hole cover-welded covers)	Structural Support to maintain core configuration and flow distribution	Nickel Alloy	Reactor Coolant	Cracking/Stress Corrosion Cracking, Intergranular Stress Corrosion Cracking, and Irradiation-Assisted Stress Corrosion Cracking	BWR Vessel Internals	IV.B1-5	3.1.1-49	E, 1
Core Shroud and Core Plate (Access hole cover-welded covers)	Structural Support to maintain core configuration and flow distribution	Nickel Alloy	Reactor Coolant	Cracking/Stress Corrosion Cracking, Intergranular Stress Corrosion Cracking, and Irradiation-Assisted Stress Corrosion Cracking	Water Chemistry	IV.B1-5	3.1.1-49	B
Core Shroud and Core Plate (Access hole cover-welded covers)	Structural Support to maintain core configuration and flow distribution	Nickel Alloy	Reactor Coolant	Loss of Material/Pitting and Crevice Corrosion	BWR Vessel Internals	IV.B1-15	3.1.1-47	E, 1
Core Shroud and Core Plate (Access hole cover-welded covers)	Structural Support to maintain core configuration and flow distribution	Nickel Alloy	Reactor Coolant	Loss of Material/Pitting and Crevice Corrosion	Water Chemistry	IV.B1-15	3.1.1-47	B
Core Shroud and Core Plate (Access hole cover-welded covers)	Structural Support to maintain core configuration and flow distribution	Stainless Steel	Reactor Coolant and Neutron Flux	Loss of Material/Pitting and Crevice Corrosion	BWR Vessel Internals	IV.B1-15	3.1.1-47	E, 1
Core Shroud and Core Plate (Access hole cover-welded covers)	Structural Support to maintain core configuration and flow distribution	Stainless Steel	Reactor Coolant and Neutron Flux	Loss of Material/Pitting and Crevice Corrosion	Water Chemistry	IV.B1-15	3.1.1-47	B

Table 3.1.2-2 Reactor Internals (Continued)

Component Type	Intended Function	Material	Environment	Aging Effect Requiring Management	Aging Management Programs	NUREG-1801 Vol. 2 Item	Table 1 Item	Notes
Core Shroud and Core Plate (Core Shroud-Upper, Central, Lower)	Pressure Boundary	Nickel Alloy	Reactor Coolant and Neutron Flux	Cracking/Stress Corrosion Cracking, Intergranular Stress Corrosion Cracking, and Irradiation-Assisted Stress Corrosion Cracking	BWR Vessel Internals			F
Core Shroud and Core Plate (Core Shroud-Upper, Central, Lower)	Pressure Boundary	Nickel Alloy	Reactor Coolant and Neutron Flux	Cracking/Stress Corrosion Cracking, Intergranular Stress Corrosion Cracking, and Irradiation-Assisted Stress Corrosion Cracking	Water Chemistry			F
Core Shroud and Core Plate (Core Shroud-Upper, Central, Lower)	Pressure Boundary	Nickel Alloy	Reactor Coolant and Neutron Flux	Loss of Material/Pitting and Crevice Corrosion	BWR Vessel Internals	IV.B1-15	3.1.1-47	E, 1
Core Shroud and Core Plate (Core Shroud-Upper, Central, Lower)	Pressure Boundary	Nickel Alloy	Reactor Coolant and Neutron Flux	Loss of Material/Pitting and Crevice Corrosion	Water Chemistry	IV.B1-15	3.1.1-47	B
Core Shroud and Core Plate (Core Shroud-Upper, Central, Lower)	Pressure Boundary	Stainless Steel	Reactor Coolant and Neutron Flux	Cracking/Stress Corrosion Cracking, Intergranular Stress Corrosion Cracking, and Irradiation-Assisted Stress Corrosion Cracking	BWR Vessel Internals	IV.B1-1	3.1.1-44	A
Core Shroud and Core Plate (Core Shroud-Upper, Central, Lower)	Pressure Boundary	Stainless Steel	Reactor Coolant and Neutron Flux	Cracking/Stress Corrosion Cracking, Intergranular Stress Corrosion Cracking, and Irradiation-Assisted Stress Corrosion Cracking	Water Chemistry	IV.B1-1	3.1.1-44	B
Core Shroud and Core Plate (Core Shroud-Upper, Central, Lower)	Pressure Boundary	Stainless Steel	Reactor Coolant and Neutron Flux	Loss of Material/Pitting and Crevice Corrosion	BWR Vessel Internals	IV.B1-15	3.1.1-47	E, 1

Table 3.1.2-2 Reactor Internals (Continued)

Component Type	Intended Function	Material	Environment	Aging Effect Requiring Management	Aging Management Programs	NUREG-1801 Vol. 2 Item	Table 1 Item	Notes
Core Shroud and Core Plate (Core Shroud-Upper, Central, Lower)	Pressure Boundary	Stainless Steel	Reactor Coolant and Neutron Flux	Loss of Material/Pitting and Crevice Corrosion	Water Chemistry	IV.B1-15	3.1.1-47	B
Core Shroud and Core Plate (Core Shroud-Upper, Central, Lower)	Structural Support	Nickel Alloy	Reactor Coolant and Neutron Flux	Cracking/Stress Corrosion Cracking, Intergranular Stress Corrosion Cracking, and Irradiation-Assisted Stress Corrosion Cracking	BWR Vessel Internals			F
Core Shroud and Core Plate (Core Shroud-Upper, Central, Lower)	Structural Support	Nickel Alloy	Reactor Coolant and Neutron Flux	Cracking/Stress Corrosion Cracking, Intergranular Stress Corrosion Cracking, and Irradiation-Assisted Stress Corrosion Cracking	Water Chemistry			F
Core Shroud and Core Plate (Core Shroud-Upper, Central, Lower)	Structural Support	Nickel Alloy	Reactor Coolant and Neutron Flux	Loss of Material/Pitting and Crevice Corrosion	BWR Vessel Internals	IV.B1-15	3.1.1-47	E, 1
Core Shroud and Core Plate (Core Shroud-Upper, Central, Lower)	Structural Support	Nickel Alloy	Reactor Coolant and Neutron Flux	Loss of Material/Pitting and Crevice Corrosion	Water Chemistry	IV.B1-15	3.1.1-47	B
Core Shroud and Core Plate (Core Shroud-Upper, Central, Lower)	Structural Support	Stainless Steel	Reactor Coolant and Neutron Flux	Cracking/Stress Corrosion Cracking, Intergranular Stress Corrosion Cracking, and Irradiation-Assisted Stress Corrosion Cracking	BWR Vessel Internals	IV.B1-1	3.1.1-44	A
Core Shroud and Core Plate (Core Shroud-Upper, Central, Lower)	Structural Support	Stainless Steel	Reactor Coolant and Neutron Flux	Cracking/Stress Corrosion Cracking, Intergranular Stress Corrosion Cracking, and Irradiation-Assisted Stress Corrosion Cracking	Water Chemistry	IV.B1-1	3.1.1-44	B

Table 3.1.2-2 Reactor Internals (Continued)

Component Type	Intended Function	Material	Environment	Aging Effect Requiring Management	Aging Management Programs	NUREG-1801 Vol. 2 Item	Table 1 Item	Notes
Core Shroud and Core Plate (Core Shroud-Upper, Central, Lower)	Structural Support	Stainless Steel	Reactor Coolant and Neutron Flux	Loss of Material/Pitting and Crevice Corrosion	BWR Vessel Internals	IV.B1-15	3.1.1-47	E, 1
Core Shroud and Core Plate (Core Shroud-Upper, Central, Lower)	Structural Support	Stainless Steel	Reactor Coolant and Neutron Flux	Loss of Material/Pitting and Crevice Corrosion	Water Chemistry	IV.B1-15	3.1.1-47	B
Core Shroud and Core Plate (Core plate, core plate bolts, peripheral fuel supports)	Structural Support to maintain core configuration and flow distribution	Stainless Steel	Reactor Coolant and Neutron Flux	Cracking/Stress Corrosion Cracking, Intergranular Stress Corrosion Cracking, and Irradiation-Assisted Stress Corrosion Cracking	BWR Vessel Internals	IV.B1-6	3.1.1-44	A
Core Shroud and Core Plate (Core plate, core plate bolts, peripheral fuel supports)	Structural Support to maintain core configuration and flow distribution	Stainless Steel	Reactor Coolant and Neutron Flux	Cracking/Stress Corrosion Cracking, Intergranular Stress Corrosion Cracking, and Irradiation-Assisted Stress Corrosion Cracking	Water Chemistry	IV.B1-6	3.1.1-44	B
Core Shroud and Core Plate (Core plate, core plate bolts, peripheral fuel supports)	Structural Support to maintain core configuration and flow distribution	Stainless Steel	Reactor Coolant and Neutron Flux	Cumulative Fatigue Damage/Fatigue	TLAA	IV.B1-14	3.1.1-5	A, 2
Core Shroud and Core Plate (Core plate, core plate bolts, peripheral fuel supports)	Structural Support to maintain core configuration and flow distribution	Stainless Steel	Reactor Coolant and Neutron Flux	Loss of Material/Pitting and Crevice Corrosion	BWR Vessel Internals	IV.B1-15	3.1.1-47	E, 1
Core Shroud and Core Plate (Core plate, core plate bolts, peripheral fuel supports)	Structural Support to maintain core configuration and flow distribution	Stainless Steel	Reactor Coolant and Neutron Flux	Loss of Material/Pitting and Crevice Corrosion	Water Chemistry	IV.B1-15	3.1.1-47	B

Table 3.1.2-2 Reactor Internals (Continued)

Component Type	Intended Function	Material	Environment	Aging Effect Requiring Management	Aging Management Programs	NUREG-1801 Vol. 2 Item	Table 1 Item	Notes
Core Shroud and Core Plate (Core plate, core plate bolts, peripheral fuel supports)	Structural Support to maintain core configuration and flow distribution	Stainless Steel	Reactor Coolant and Neutron Flux	Loss of Preload/Stress Relaxation	TLAA			H, 3
Core Shroud and Core Plate (LPCI coupling)	Direct Flow	Stainless Steel	Reactor Coolant and Neutron Flux	Cracking/Stress Corrosion Cracking, Intergranular Stress Corrosion Cracking, and Irradiation-Assisted Stress Corrosion Cracking	BWR Vessel Internals	IV.B1-3	3.1.1-44	A
Core Shroud and Core Plate (LPCI coupling)	Direct Flow	Stainless Steel	Reactor Coolant and Neutron Flux	Cracking/Stress Corrosion Cracking, Intergranular Stress Corrosion Cracking, and Irradiation-Assisted Stress Corrosion Cracking	Water Chemistry	IV.B1-3	3.1.1-44	B
Core Shroud and Core Plate (LPCI coupling)	Direct Flow	Stainless Steel	Reactor Coolant and Neutron Flux	Loss of Material/Pitting and Crevice Corrosion	BWR Vessel Internals	IV.B1-15	3.1.1-47	E, 1
Core Shroud and Core Plate (LPCI coupling)	Direct Flow	Stainless Steel	Reactor Coolant and Neutron Flux	Loss of Material/Pitting and Crevice Corrosion	Water Chemistry	IV.B1-15	3.1.1-47	B
Core Shroud and Core Plate (LPCI coupling)	Direct Flow	Stainless Steel with Stellite Cladding	Reactor Coolant and Neutron Flux	Cracking/Stress Corrosion Cracking, Intergranular Stress Corrosion Cracking, and Irradiation-Assisted Stress Corrosion Cracking	BWR Vessel Internals			F
Core Shroud and Core Plate (LPCI coupling)	Direct Flow	Stainless Steel with Stellite Cladding	Reactor Coolant and Neutron Flux	Cracking/Stress Corrosion Cracking, Intergranular Stress Corrosion Cracking, and Irradiation-Assisted Stress Corrosion Cracking	Water Chemistry			F

Table 3.1.2-2 Reactor Internals (Continued)

Component Type	Intended Function	Material	Environment	Aging Effect Requiring Management	Aging Management Programs	NUREG-1801 Vol. 2 Item	Table 1 Item	Notes
Core Shroud and Core Plate (LPCI coupling)	Direct Flow	Stainless Steel with Stellite Cladding	Reactor Coolant and Neutron Flux	Loss of Material/Pitting and Crevice Corrosion	BWR Vessel Internals			F
Core Shroud and Core Plate (LPCI coupling)	Direct Flow	Stainless Steel with Stellite Cladding	Reactor Coolant and Neutron Flux	Loss of Material/Pitting and Crevice Corrosion	Water Chemistry			F
Core Shroud and Core Plate (Shroud support cylinder, plate, column)	Pressure Boundary	Nickel Alloy	Reactor Coolant	Cracking/Stress Corrosion Cracking, Intergranular Stress Corrosion Cracking, and Irradiation-Assisted Stress Corrosion Cracking	BWR Vessel Internals	IV.B1-2	3.1.1-44	A
Core Shroud and Core Plate (Shroud support cylinder, plate, column)	Pressure Boundary	Nickel Alloy	Reactor Coolant	Cracking/Stress Corrosion Cracking, Intergranular Stress Corrosion Cracking, and Irradiation-Assisted Stress Corrosion Cracking	Water Chemistry	IV.B1-2	3.1.1-44	B
Core Shroud and Core Plate (Shroud support cylinder, plate, column)	Pressure Boundary	Nickel Alloy	Reactor Coolant	Loss of Material/Pitting and Crevice Corrosion	BWR Vessel Internals	IV.B1-15	3.1.1-47	E, 1
Core Shroud and Core Plate (Shroud support cylinder, plate, column)	Pressure Boundary	Nickel Alloy	Reactor Coolant	Loss of Material/Pitting and Crevice Corrosion	Water Chemistry	IV.B1-15	3.1.1-47	B
Core Shroud and Core Plate (Shroud support cylinder, plate, column)	Structural Support to maintain core configuration and flow distribution	Nickel Alloy	Reactor Coolant	Cracking/Stress Corrosion Cracking, Intergranular Stress Corrosion Cracking, and Irradiation-Assisted Stress Corrosion Cracking	BWR Vessel Internals	IV.B1-2	3.1.1-44	A

Table 3.1.2-2 Reactor Internals (Continued)

Component Type	Intended Function	Material	Environment	Aging Effect Requiring Management	Aging Management Programs	NUREG-1801 Vol. 2 Item	Table 1 Item	Notes
Core Shroud and Core Plate (Shroud support cylinder, plate, column)	Structural Support to maintain core configuration and flow distribution	Nickel Alloy	Reactor Coolant	Cracking/Stress Corrosion Cracking, Intergranular Stress Corrosion Cracking, and Irradiation-Assisted Stress Corrosion Cracking	Water Chemistry	IV.B1-2	3.1.1-44	B
Core Shroud and Core Plate (Shroud support cylinder, plate, column)	Structural Support to maintain core configuration and flow distribution	Nickel Alloy	Reactor Coolant	Loss of Material/Pitting and Crevice Corrosion	BWR Vessel Internals	IV.B1-15	3.1.1-47	E, 1
Core Shroud and Core Plate (Shroud support cylinder, plate, column)	Structural Support to maintain core configuration and flow distribution	Nickel Alloy	Reactor Coolant	Loss of Material/Pitting and Crevice Corrosion	Water Chemistry	IV.B1-15	3.1.1-47	B
Core Spray Lines and Spargers (Core spray lines (headers), spray rings, spray nozzles, thermal sleeve)	Direct Flow	Cast Austenitic Stainless Steel (CASS)	Reactor Coolant and Neutron Flux	Cracking/Stress Corrosion Cracking, Intergranular Stress Corrosion Cracking, and Irradiation-Assisted Stress Corrosion Cracking	BWR Vessel Internals	IV.B1-7	3.1.1-44	A
Core Spray Lines and Spargers (Core spray lines (headers), spray rings, spray nozzles, thermal sleeve)	Direct Flow	Cast Austenitic Stainless Steel (CASS)	Reactor Coolant and Neutron Flux	Cracking/Stress Corrosion Cracking, Intergranular Stress Corrosion Cracking, and Irradiation-Assisted Stress Corrosion Cracking	Water Chemistry	IV.B1-7	3.1.1-44	B
Core Spray Lines and Spargers (Core spray lines (headers), spray rings, spray nozzles, thermal sleeve)	Direct Flow	Cast Austenitic Stainless Steel (CASS)	Reactor Coolant and Neutron Flux	Loss of Fracture Toughness/Thermal Aging Embrittlement and Neutron Irradiation Embrittlement	Thermal Aging and Neutron Irradiation Embrittlement of Cast Austenitic Stainless Steel (CASS)	IV.B1-11	3.1.1-51	C

Table 3.1.2-2 Reactor Internals (Continued)

Component Type	Intended Function	Material	Environment	Aging Effect Requiring Management	Aging Management Programs	NUREG-1801 Vol. 2 Item	Table 1 Item	Notes
Core Spray Lines and Spargers (Core spray lines (headers), spray rings, spray nozzles, thermal sleeve)	Direct Flow	Cast Austenitic Stainless Steel (CASS)	Reactor Coolant and Neutron Flux	Loss of Material/Pitting and Crevice Corrosion	BWR Vessel Internals	IV.B1-15	3.1.1-47	E, 1
Core Spray Lines and Spargers (Core spray lines (headers), spray rings, spray nozzles, thermal sleeve)	Direct Flow	Cast Austenitic Stainless Steel (CASS)	Reactor Coolant and Neutron Flux	Loss of Material/Pitting and Crevice Corrosion	Water Chemistry	IV.B1-15	3.1.1-47	B
Core Spray Lines and Spargers (Core spray lines (headers), spray rings, spray nozzles, thermal sleeve)	Direct Flow	Stainless Steel	Reactor Coolant and Neutron Flux	Cracking/Stress Corrosion Cracking, Intergranular Stress Corrosion Cracking, and Irradiation-Assisted Stress Corrosion Cracking	BWR Vessel Internals	IV.B1-7	3.1.1-44	A
Core Spray Lines and Spargers (Core spray lines (headers), spray rings, spray nozzles, thermal sleeve)	Direct Flow	Stainless Steel	Reactor Coolant and Neutron Flux	Cracking/Stress Corrosion Cracking, Intergranular Stress Corrosion Cracking, and Irradiation-Assisted Stress Corrosion Cracking	Water Chemistry	IV.B1-7	3.1.1-44	B
Core Spray Lines and Spargers (Core spray lines (headers), spray rings, spray nozzles, thermal sleeve)	Direct Flow	Stainless Steel	Reactor Coolant and Neutron Flux	Loss of Material/Pitting and Crevice Corrosion	BWR Vessel Internals	IV.B1-15	3.1.1-47	E, 1

Table 3.1.2-2 Reactor Internals (Continued)

Component Type	Intended Function	Material	Environment	Aging Effect Requiring Management	Aging Management Programs	NUREG-1801 Vol. 2 Item	Table 1 Item	Notes
Core Spray Lines and Spargers (Core spray lines (headers), spray rings, spray nozzles, thermal sleeve)	Direct Flow	Stainless Steel	Reactor Coolant and Neutron Flux	Loss of Material/Pitting and Crevice Corrosion	Water Chemistry	IV.B1-15	3.1.1-47	B
Fuel Supports and Control Rod Drive Assemblies (Control rod drive housing)	Pressure Boundary	Nickel Alloy	Reactor Coolant	Cracking/Stress Corrosion Cracking, Intergranular Stress Corrosion Cracking, and Irradiation-Assisted Stress Corrosion Cracking	BWR Vessel Internals	IV.B1-2	3.1.1-44	C
Fuel Supports and Control Rod Drive Assemblies (Control rod drive housing)	Pressure Boundary	Nickel Alloy	Reactor Coolant	Cracking/Stress Corrosion Cracking, Intergranular Stress Corrosion Cracking, and Irradiation-Assisted Stress Corrosion Cracking	Water Chemistry	IV.B1-2	3.1.1-44	D
Fuel Supports and Control Rod Drive Assemblies (Control rod drive housing)	Pressure Boundary	Nickel Alloy	Reactor Coolant	Loss of Material/Pitting and Crevice Corrosion	BWR Vessel Internals	IV.B1-15	3.1.1-47	E, 1
Fuel Supports and Control Rod Drive Assemblies (Control rod drive housing)	Pressure Boundary	Nickel Alloy	Reactor Coolant	Loss of Material/Pitting and Crevice Corrosion	Water Chemistry	IV.B1-15	3.1.1-47	B
Fuel Supports and Control Rod Drive Assemblies (Control rod drive housing)	Pressure Boundary	Stainless Steel	Air - Indoor (External)	None	None	IV.E-2	3.1.1-86	A

Table 3.1.2-2 Reactor Internals (Continued)

Component Type	Intended Function	Material	Environment	Aging Effect Requiring Management	Aging Management Programs	NUREG-1801 Vol. 2 Item	Table 1 Item	Notes
Fuel Supports and Control Rod Drive Assemblies (Control rod drive housing)	Pressure Boundary	Stainless Steel	Reactor Coolant	Cracking/Stress Corrosion Cracking	BWR Vessel Internals	IV.B1-8	3.1.1-43	A
Fuel Supports and Control Rod Drive Assemblies (Control rod drive housing)	Pressure Boundary	Stainless Steel	Reactor Coolant	Cracking/Stress Corrosion Cracking	Water Chemistry	IV.B1-8	3.1.1-43	B
Fuel Supports and Control Rod Drive Assemblies (Control rod drive housing)	Pressure Boundary	Stainless Steel	Reactor Coolant	Loss of Material/Pitting and Crevice Corrosion	BWR Vessel Internals	IV.B1-15	3.1.1-47	E, 1
Fuel Supports and Control Rod Drive Assemblies (Control rod drive housing)	Pressure Boundary	Stainless Steel	Reactor Coolant	Loss of Material/Pitting and Crevice Corrosion	Water Chemistry	IV.B1-15	3.1.1-47	B
Fuel Supports and Control Rod Drive Assemblies (Control rod drive housing)	Structural Support to maintain core configuration and flow distribution	Nickel Alloy	Reactor Coolant	Cracking/Stress Corrosion Cracking, Intergranular Stress Corrosion Cracking, and Irradiation-Assisted Stress Corrosion Cracking	BWR Vessel Internals	IV.B1-2	3.1.1-44	C
Fuel Supports and Control Rod Drive Assemblies (Control rod drive housing)	Structural Support to maintain core configuration and flow distribution	Nickel Alloy	Reactor Coolant	Cracking/Stress Corrosion Cracking, Intergranular Stress Corrosion Cracking, and Irradiation-Assisted Stress Corrosion Cracking	Water Chemistry	IV.B1-2	3.1.1-44	D
Fuel Supports and Control Rod Drive Assemblies (Control rod drive housing)	Structural Support to maintain core configuration and flow distribution	Nickel Alloy	Reactor Coolant	Loss of Material/Pitting and Crevice Corrosion	BWR Vessel Internals	IV.B1-15	3.1.1-47	E, 1

Table 3.1.2-2 Reactor Internals (Continued)

Component Type	Intended Function	Material	Environment	Aging Effect Requiring Management	Aging Management Programs	NUREG-1801 Vol. 2 Item	Table 1 Item	Notes
Fuel Supports and Control Rod Drive Assemblies (Control rod drive housing)	Structural Support to maintain core configuration and flow distribution	Nickel Alloy	Reactor Coolant	Loss of Material/Pitting and Crevice Corrosion	Water Chemistry	IV.B1-15	3.1.1-47	B
Fuel Supports and Control Rod Drive Assemblies (Control rod drive housing)	Structural Support to maintain core configuration and flow distribution	Stainless Steel	Air - Indoor (External)	None	None	IV.E-2	3.1.1-86	A
Fuel Supports and Control Rod Drive Assemblies (Control rod drive housing)	Structural Support to maintain core configuration and flow distribution	Stainless Steel	Reactor Coolant	Cracking/Stress Corrosion Cracking	BWR Vessel Internals	IV.B1-8	3.1.1-43	A
Fuel Supports and Control Rod Drive Assemblies (Control rod drive housing)	Structural Support to maintain core configuration and flow distribution	Stainless Steel	Reactor Coolant	Cracking/Stress Corrosion Cracking	Water Chemistry	IV.B1-8	3.1.1-43	B
Fuel Supports and Control Rod Drive Assemblies (Control rod drive housing)	Structural Support to maintain core configuration and flow distribution	Stainless Steel	Reactor Coolant	Loss of Material/Pitting and Crevice Corrosion	BWR Vessel Internals	IV.B1-15	3.1.1-47	E, 1
Fuel Supports and Control Rod Drive Assemblies (Control rod drive housing)	Structural Support to maintain core configuration and flow distribution	Stainless Steel	Reactor Coolant	Loss of Material/Pitting and Crevice Corrosion	Water Chemistry	IV.B1-15	3.1.1-47	B
Fuel Supports and Control Rod Drive Assemblies (Control rod guide tube)	Structural Support to maintain core configuration and flow distribution	Cast Austenitic Stainless Steel (CASS)	Reactor Coolant	Cracking/Stress Corrosion Cracking	BWR Vessel Internals	IV.B1-8	3.1.1-43	C

Table 3.1.2-2 Reactor Internals (Continued)

Component Type	Intended Function	Material	Environment	Aging Effect Requiring Management	Aging Management Programs	NUREG-1801 Vol. 2 Item	Table 1 Item	Notes
Fuel Supports and Control Rod Drive Assemblies (Control rod guide tube)	Structural Support to maintain core configuration and flow distribution	Cast Austenitic Stainless Steel (CASS)	Reactor Coolant	Cracking/Stress Corrosion Cracking	Water Chemistry	IV.B1-8	3.1.1-43	D
Fuel Supports and Control Rod Drive Assemblies (Control rod guide tube)	Structural Support to maintain core configuration and flow distribution	Cast Austenitic Stainless Steel (CASS)	Reactor Coolant	Loss of Fracture Toughness/Thermal Aging Embrittlement and Neutron Irradiation Embrittlement	Thermal Aging and Neutron Irradiation Embrittlement of Cast Austenitic Stainless Steel (CASS)	IV.B1-9	3.1.1-51	C
Fuel Supports and Control Rod Drive Assemblies (Control rod guide tube)	Structural Support to maintain core configuration and flow distribution	Cast Austenitic Stainless Steel (CASS)	Reactor Coolant	Loss of Material/Pitting and Crevice Corrosion	BWR Vessel Internals	IV.B1-15	3.1.1-47	E, 1
Fuel Supports and Control Rod Drive Assemblies (Control rod guide tube)	Structural Support to maintain core configuration and flow distribution	Cast Austenitic Stainless Steel (CASS)	Reactor Coolant	Loss of Material/Pitting and Crevice Corrosion	Water Chemistry	IV.B1-15	3.1.1-47	B
Fuel Supports and Control Rod Drive Assemblies (Control rod guide tube)	Structural Support to maintain core configuration and flow distribution	Stainless Steel	Reactor Coolant and Neutron Flux	Cracking/Stress Corrosion Cracking, Intergranular Stress Corrosion Cracking, and Irradiation-Assisted Stress Corrosion Cracking	BWR Vessel Internals	IV.B1-10	3.1.1-44	C
Fuel Supports and Control Rod Drive Assemblies (Control rod guide tube)	Structural Support to maintain core configuration and flow distribution	Stainless Steel	Reactor Coolant and Neutron Flux	Cracking/Stress Corrosion Cracking, Intergranular Stress Corrosion Cracking, and Irradiation-Assisted Stress Corrosion Cracking	Water Chemistry	IV.B1-10	3.1.1-44	D
Fuel Supports and Control Rod Drive Assemblies (Control rod guide tube)	Structural Support to maintain core configuration and flow distribution	Stainless Steel	Reactor Coolant and Neutron Flux	Loss of Material/Pitting and Crevice Corrosion	BWR Vessel Internals	IV.B1-15	3.1.1-47	E, 1

Table 3.1.2-2 Reactor Internals (Continued)

Component Type	Intended Function	Material	Environment	Aging Effect Requiring Management	Aging Management Programs	NUREG-1801 Vol. 2 Item	Table 1 Item	Notes
Fuel Supports and Control Rod Drive Assemblies (Control rod guide tube)	Structural Support to maintain core configuration and flow distribution	Stainless Steel	Reactor Coolant and Neutron Flux	Loss of Material/Pitting and Crevice Corrosion	Water Chemistry	IV.B1-15	3.1.1-47	B
Fuel Supports and Control Rod Drive Assemblies (Orificed fuel support)	Structural Support to maintain core configuration and flow distribution	Cast Austenitic Stainless Steel (CASS)	Reactor Coolant and Neutron Flux	Cracking/Stress Corrosion Cracking, Intergranular Stress Corrosion Cracking, and Irradiation-Assisted Stress Corrosion Cracking	BWR Vessel Internals	IV.B1-1	3.1.1-44	C
Fuel Supports and Control Rod Drive Assemblies (Orificed fuel support)	Structural Support to maintain core configuration and flow distribution	Cast Austenitic Stainless Steel (CASS)	Reactor Coolant and Neutron Flux	Cracking/Stress Corrosion Cracking, Intergranular Stress Corrosion Cracking, and Irradiation-Assisted Stress Corrosion Cracking	Water Chemistry	IV.B1-1	3.1.1-44	D
Fuel Supports and Control Rod Drive Assemblies (Orificed fuel support)	Structural Support to maintain core configuration and flow distribution	Cast Austenitic Stainless Steel (CASS)	Reactor Coolant and Neutron Flux	Loss of Fracture Toughness/Thermal Aging Embrittlement and Neutron Irradiation Embrittlement	Thermal Aging and Neutron Irradiation Embrittlement of Cast Austenitic Stainless Steel (CASS)	IV.B1-9	3.1.1-51	A
Fuel Supports and Control Rod Drive Assemblies (Orificed fuel support)	Structural Support to maintain core configuration and flow distribution	Cast Austenitic Stainless Steel (CASS)	Reactor Coolant and Neutron Flux	Loss of Material/Pitting and Crevice Corrosion	BWR Vessel Internals	IV.B1-15	3.1.1-47	E, 1
Fuel Supports and Control Rod Drive Assemblies (Orificed fuel support)	Structural Support to maintain core configuration and flow distribution	Cast Austenitic Stainless Steel (CASS)	Reactor Coolant and Neutron Flux	Loss of Material/Pitting and Crevice Corrosion	Water Chemistry	IV.B1-15	3.1.1-47	B
Instrumentation (IRM dry tubes, SRM dry tubes)	Pressure Boundary	Stainless Steel	Air - Indoor (External)	None	None	IV.E-2	3.1.1-86	A

Table 3.1.2-2 Reactor Internals (Continued)

Component Type	Intended Function	Material	Environment	Aging Effect Requiring Management	Aging Management Programs	NUREG-1801 Vol. 2 Item	Table 1 Item	Notes
Instrumentation (IRM dry tubes, SRM dry tubes)	Pressure Boundary	Stainless Steel	Reactor Coolant and Neutron Flux	Cracking/Stress Corrosion Cracking, Intergranular Stress Corrosion Cracking, and Irradiation-Assisted Stress Corrosion Cracking	BWR Vessel Internals	IV.B1-10	3.1.1-44	A
Instrumentation (IRM dry tubes, SRM dry tubes)	Pressure Boundary	Stainless Steel	Reactor Coolant and Neutron Flux	Cracking/Stress Corrosion Cracking, Intergranular Stress Corrosion Cracking, and Irradiation-Assisted Stress Corrosion Cracking	Water Chemistry	IV.B1-10	3.1.1-44	B
Instrumentation (IRM dry tubes, SRM dry tubes)	Pressure Boundary	Stainless Steel	Reactor Coolant and Neutron Flux	Loss of Material/Pitting and Crevice Corrosion	BWR Vessel Internals	IV.B1-15	3.1.1-47	E, 1
Instrumentation (IRM dry tubes, SRM dry tubes)	Pressure Boundary	Stainless Steel	Reactor Coolant and Neutron Flux	Loss of Material/Pitting and Crevice Corrosion	Water Chemistry	IV.B1-15	3.1.1-47	B
Instrumentation (IRM dry tubes, SRM dry tubes)	Structural Support	Stainless Steel	Air - Indoor (External)	None	None	IV.E-2	3.1.1-86	A
Instrumentation (IRM dry tubes, SRM dry tubes)	Structural Support	Stainless Steel	Reactor Coolant and Neutron Flux	Cracking/Stress Corrosion Cracking, Intergranular Stress Corrosion Cracking, and Irradiation-Assisted Stress Corrosion Cracking	BWR Vessel Internals	IV.B1-10	3.1.1-44	A
Instrumentation (IRM dry tubes, SRM dry tubes)	Structural Support	Stainless Steel	Reactor Coolant and Neutron Flux	Cracking/Stress Corrosion Cracking, Intergranular Stress Corrosion Cracking, and Irradiation-Assisted Stress Corrosion Cracking	Water Chemistry	IV.B1-10	3.1.1-44	B
Instrumentation (IRM dry tubes, SRM dry tubes)	Structural Support	Stainless Steel	Reactor Coolant and Neutron Flux	Loss of Material/Pitting and Crevice Corrosion	BWR Vessel Internals	IV.B1-15	3.1.1-47	E, 1

Table 3.1.2-2 Reactor Internals (Continued)

Component Type	Intended Function	Material	Environment	Aging Effect Requiring Management	Aging Management Programs	NUREG-1801 Vol. 2 Item	Table 1 Item	Notes
Instrumentation (IRM dry tubes, SRM dry tubes)	Structural Support	Stainless Steel	Reactor Coolant and Neutron Flux	Loss of Material/Pitting and Crevice Corrosion	Water Chemistry	IV.B1-15	3.1.1-47	B
Instrumentation (Incore neutron flux monitor guide tubes)	Structural Support	Stainless Steel	Reactor Coolant	Cracking/Stress Corrosion Cracking, Intergranular Stress Corrosion Cracking, and Irradiation-Assisted Stress Corrosion Cracking	BWR Vessel Internals	IV.B1-10	3.1.1-44	A
Instrumentation (Incore neutron flux monitor guide tubes)	Structural Support	Stainless Steel	Reactor Coolant	Cracking/Stress Corrosion Cracking, Intergranular Stress Corrosion Cracking, and Irradiation-Assisted Stress Corrosion Cracking	Water Chemistry	IV.B1-10	3.1.1-44	B
Instrumentation (Incore neutron flux monitor guide tubes)	Structural Support	Stainless Steel	Reactor Coolant	Loss of Material/Pitting and Crevice Corrosion	BWR Vessel Internals	IV.B1-15	3.1.1-47	E, 1
Instrumentation (Incore neutron flux monitor guide tubes)	Structural Support	Stainless Steel	Reactor Coolant	Loss of Material/Pitting and Crevice Corrosion	Water Chemistry	IV.B1-15	3.1.1-47	B
Instrumentation (Incore neutron flux monitor housing)	Pressure Boundary	Nickel Alloy	Reactor Coolant	Cracking/Stress Corrosion Cracking, Intergranular Stress Corrosion Cracking, and Irradiation-Assisted Stress Corrosion Cracking	BWR Vessel Internals	IV.B1-2	3.1.1-44	C
Instrumentation (Incore neutron flux monitor housing)	Pressure Boundary	Nickel Alloy	Reactor Coolant	Cracking/Stress Corrosion Cracking, Intergranular Stress Corrosion Cracking, and Irradiation-Assisted Stress Corrosion Cracking	Water Chemistry	IV.B1-2	3.1.1-44	D

Table 3.1.2-2 Reactor Internals (Continued)

Component Type	Intended Function	Material	Environment	Aging Effect Requiring Management	Aging Management Programs	NUREG-1801 Vol. 2 Item	Table 1 Item	Notes
Instrumentation (Incore neutron flux monitor housing)	Pressure Boundary	Nickel Alloy	Reactor Coolant	Loss of Material/Pitting and Crevice Corrosion	BWR Vessel Internals	IV.B1-15	3.1.1-47	E, 1
Instrumentation (Incore neutron flux monitor housing)	Pressure Boundary	Nickel Alloy	Reactor Coolant	Loss of Material/Pitting and Crevice Corrosion	Water Chemistry	IV.B1-15	3.1.1-47	B
Instrumentation (Incore neutron flux monitor housing)	Pressure Boundary	Stainless Steel	Air - Indoor (External)	None	None	IV.E-2	3.1.1-86	A
Instrumentation (Incore neutron flux monitor housing)	Pressure Boundary	Stainless Steel	Reactor Coolant	Cracking/Stress Corrosion Cracking, Intergranular Stress Corrosion Cracking, and Irradiation-Assisted Stress Corrosion Cracking	BWR Vessel Internals	IV.B1-10	3.1.1-44	C
Instrumentation (Incore neutron flux monitor housing)	Pressure Boundary	Stainless Steel	Reactor Coolant	Cracking/Stress Corrosion Cracking, Intergranular Stress Corrosion Cracking, and Irradiation-Assisted Stress Corrosion Cracking	Water Chemistry	IV.B1-10	3.1.1-44	D
Instrumentation (Incore neutron flux monitor housing)	Pressure Boundary	Stainless Steel	Reactor Coolant	Loss of Material/Pitting and Crevice Corrosion	BWR Vessel Internals	IV.B1-15	3.1.1-47	E, 1
Instrumentation (Incore neutron flux monitor housing)	Pressure Boundary	Stainless Steel	Reactor Coolant	Loss of Material/Pitting and Crevice Corrosion	Water Chemistry	IV.B1-15	3.1.1-47	B
Instrumentation (Incore neutron flux monitor housing)	Structural Support	Nickel Alloy	Reactor Coolant	Cracking/Stress Corrosion Cracking, Intergranular Stress Corrosion Cracking, and Irradiation-Assisted Stress Corrosion Cracking	BWR Vessel Internals	IV.B1-2	3.1.1-44	C

Table 3.1.2-2 Reactor Internals (Continued)

Component Type	Intended Function	Material	Environment	Aging Effect Requiring Management	Aging Management Programs	NUREG-1801 Vol. 2 Item	Table 1 Item	Notes
Instrumentation (Incore neutron flux monitor housing)	Structural Support	Nickel Alloy	Reactor Coolant	Cracking/Stress Corrosion Cracking, Intergranular Stress Corrosion Cracking, and Irradiation-Assisted Stress Corrosion Cracking	Water Chemistry	IV.B1-2	3.1.1-44	D
Instrumentation (Incore neutron flux monitor housing)	Structural Support	Nickel Alloy	Reactor Coolant	Loss of Material/Pitting and Crevice Corrosion	BWR Vessel Internals	IV.B1-15	3.1.1-47	E, 1
Instrumentation (Incore neutron flux monitor housing)	Structural Support	Nickel Alloy	Reactor Coolant	Loss of Material/Pitting and Crevice Corrosion	Water Chemistry	IV.B1-15	3.1.1-47	B
Instrumentation (Incore neutron flux monitor housing)	Structural Support	Stainless Steel	Air - Indoor (External)	None	None	IV.E-2	3.1.1-86	A
Instrumentation (Incore neutron flux monitor housing)	Structural Support	Stainless Steel	Reactor Coolant	Cracking/Stress Corrosion Cracking, Intergranular Stress Corrosion Cracking, and Irradiation-Assisted Stress Corrosion Cracking	BWR Vessel Internals	IV.B1-10	3.1.1-44	C
Instrumentation (Incore neutron flux monitor housing)	Structural Support	Stainless Steel	Reactor Coolant	Cracking/Stress Corrosion Cracking, Intergranular Stress Corrosion Cracking, and Irradiation-Assisted Stress Corrosion Cracking	Water Chemistry	IV.B1-10	3.1.1-44	D
Instrumentation (Incore neutron flux monitor housing)	Structural Support	Stainless Steel	Reactor Coolant	Loss of Material/Pitting and Crevice Corrosion	BWR Vessel Internals	IV.B1-15	3.1.1-47	E, 1
Instrumentation (Incore neutron flux monitor housing)	Structural Support	Stainless Steel	Reactor Coolant	Loss of Material/Pitting and Crevice Corrosion	Water Chemistry	IV.B1-15	3.1.1-47	B

Table 3.1.2-2 Reactor Internals (Continued)

Component Type	Intended Function	Material	Environment	Aging Effect Requiring Management	Aging Management Programs	NUREG-1801 Vol. 2 Item	Table 1 Item	Notes
Jet Pump Assemblies (Riser brace,beam/bolt assembly, riser pipe, inlet, mixer, restrainer bracket, wedge, diffuser and tailpipe, adapter/lower ring, auxiliary spring wedges and slip joint clamps/bolts)	Pressure Boundary	Cast Austenitic Stainless Steel (CASS)	Reactor Coolant and Neutron Flux	Cracking/Stress Corrosion Cracking, Intergranular Stress Corrosion Cracking, and Irradiation-Assisted Stress Corrosion Cracking	BWR Vessel Internals	IV.B1-13	3.1.1-44	A
Jet Pump Assemblies (Riser brace,beam/bolt assembly, riser pipe, inlet, mixer, restrainer bracket, wedge, diffuser and tailpipe, adapter/lower ring, auxiliary spring wedges and slip joint clamps/bolts)	Pressure Boundary	Cast Austenitic Stainless Steel (CASS)	Reactor Coolant and Neutron Flux	Cracking/Stress Corrosion Cracking, Intergranular Stress Corrosion Cracking, and Irradiation-Assisted Stress Corrosion Cracking	Water Chemistry	IV.B1-13	3.1.1-44	B
Jet Pump Assemblies (Riser brace,beam/bolt assembly, riser pipe, inlet, mixer, restrainer bracket, wedge, diffuser and tailpipe, adapter/lower ring, auxiliary spring wedges and slip joint clamps/bolts)	Pressure Boundary	Cast Austenitic Stainless Steel (CASS)	Reactor Coolant and Neutron Flux	Loss of Fracture Toughness/Thermal Aging Embrittlement and Neutron Irradiation Embrittlement	Thermal Aging and Neutron Irradiation Embrittlement of Cast Austenitic Stainless Steel (CASS)	IV.B1-11	3.1.1-51	A

Table 3.1.2-2 Reactor Internals (Continued)

Component Type	Intended Function	Material	Environment	Aging Effect Requiring Management	Aging Management Programs	NUREG-1801 Vol. 2 Item	Table 1 Item	Notes
Jet Pump Assemblies (Riser brace,beam/bolt assembly, riser pipe, inlet, mixer, restrainer bracket, wedge, diffuser and tailpipe, adapter/lower ring, auxiliary spring wedges and slip joint clamps/bolts)	Pressure Boundary	Cast Austenitic Stainless Steel (CASS)	Reactor Coolant and Neutron Flux	Loss of Material/Pitting and Crevice Corrosion	BWR Vessel Internals	IV.B1-15	3.1.1-47	E, 1
Jet Pump Assemblies (Riser brace,beam/bolt assembly, riser pipe, inlet, mixer, restrainer bracket, wedge, diffuser and tailpipe, adapter/lower ring, auxiliary spring wedges and slip joint clamps/bolts)	Pressure Boundary	Cast Austenitic Stainless Steel (CASS)	Reactor Coolant and Neutron Flux	Loss of Material/Pitting and Crevice Corrosion	Water Chemistry	IV.B1-15	3.1.1-47	B
Jet Pump Assemblies (Riser brace,beam/bolt assembly, riser pipe, inlet, mixer, restrainer bracket, wedge, diffuser and tailpipe, adapter/lower ring, auxiliary spring wedges and slip joint clamps/bolts)	Pressure Boundary	Nickel Alloy	Reactor Coolant and Neutron Flux	Cracking/Stress Corrosion Cracking, Intergranular Stress Corrosion Cracking, and Irradiation-Assisted Stress Corrosion Cracking	BWR Vessel Internals	IV.B1-13	3.1.1-44	A

Table 3.1.2-2 Reactor Internals (Continued)

Component Type	Intended Function	Material	Environment	Aging Effect Requiring Management	Aging Management Programs	NUREG-1801 Vol. 2 Item	Table 1 Item	Notes
Jet Pump Assemblies (Riser brace,beam/bolt assembly, riser pipe, inlet, mixer, restrainer bracket, wedge, diffuser and tailpipe, adapter/lower ring, auxiliary spring wedges and slip joint clamps/bolts)	Pressure Boundary	Nickel Alloy	Reactor Coolant and Neutron Flux	Cracking/Stress Corrosion Cracking, Intergranular Stress Corrosion Cracking, and Irradiation-Assisted Stress Corrosion Cracking	Water Chemistry	IV.B1-13	3.1.1-44	B
Jet Pump Assemblies (Riser brace,beam/bolt assembly, riser pipe, inlet, mixer, restrainer bracket, wedge, diffuser and tailpipe, adapter/lower ring, auxiliary spring wedges and slip joint clamps/bolts)	Pressure Boundary	Nickel Alloy	Reactor Coolant and Neutron Flux	Loss of Material/Pitting and Crevice Corrosion	BWR Vessel Internals	IV.B1-15	3.1.1-47	E, 1
Jet Pump Assemblies (Riser brace,beam/bolt assembly, riser pipe, inlet, mixer, restrainer bracket, wedge, diffuser and tailpipe, adapter/lower ring, auxiliary spring wedges and slip joint clamps/bolts)	Pressure Boundary	Nickel Alloy	Reactor Coolant and Neutron Flux	Loss of Material/Pitting and Crevice Corrosion	Water Chemistry	IV.B1-15	3.1.1-47	B

Table 3.1.2-2 Reactor Internals (Continued)

Component Type	Intended Function	Material	Environment	Aging Effect Requiring Management	Aging Management Programs	NUREG-1801 Vol. 2 Item	Table 1 Item	Notes
Jet Pump Assemblies (Riser brace,beam/bolt assembly, riser pipe, inlet, mixer, restrainer bracket, wedge, diffuser and tailpipe, adapter/lower ring, auxiliary spring wedges and slip joint clamps/bolts)	Pressure Boundary	Stainless Steel	Reactor Coolant and Neutron Flux	Cracking/Stress Corrosion Cracking, Intergranular Stress Corrosion Cracking, and Irradiation-Assisted Stress Corrosion Cracking	BWR Vessel Internals	IV.B1-13	3.1.1-44	A
Jet Pump Assemblies (Riser brace,beam/bolt assembly, riser pipe, inlet, mixer, restrainer bracket, wedge, diffuser and tailpipe, adapter/lower ring, auxiliary spring wedges and slip joint clamps/bolts)	Pressure Boundary	Stainless Steel	Reactor Coolant and Neutron Flux	Cracking/Stress Corrosion Cracking, Intergranular Stress Corrosion Cracking, and Irradiation-Assisted Stress Corrosion Cracking	Water Chemistry	IV.B1-13	3.1.1-44	B
Jet Pump Assemblies (Riser brace,beam/bolt assembly, riser pipe, inlet, mixer, restrainer bracket, wedge, diffuser and tailpipe, adapter/lower ring, auxiliary spring wedges and slip joint clamps/bolts)	Pressure Boundary	Stainless Steel	Reactor Coolant and Neutron Flux	Loss of Material/Pitting and Crevice Corrosion	BWR Vessel Internals	IV.B1-15	3.1.1-47	E, 1

Table 3.1.2-2 Reactor Internals (Continued)

Component Type	Intended Function	Material	Environment	Aging Effect Requiring Management	Aging Management Programs	NUREG-1801 Vol. 2 Item	Table 1 Item	Notes
Jet Pump Assemblies (Riser brace,beam/bolt assembly, riser pipe, inlet, mixer, restrainer bracket, wedge, diffuser and tailpipe, adapter/lower ring, auxiliary spring wedges and slip joint clamps/bolts)	Pressure Boundary	Stainless Steel	Reactor Coolant and Neutron Flux	Loss of Material/Pitting and Crevice Corrosion	Water Chemistry	IV.B1-15	3.1.1-47	B
Jet Pump Assemblies (Riser brace,beam/bolt assembly, riser pipe, inlet, mixer, restrainer bracket, wedge, diffuser and tailpipe, adapter/lower ring, auxiliary spring wedges and slip joint clamps/bolts)	Pressure Boundary	Stainless Steel with Stellite Cladding	Reactor Coolant and Neutron Flux	Cracking/Stress Corrosion Cracking, Intergranular Stress Corrosion Cracking, and Irradiation-Assisted Stress Corrosion Cracking	BWR Vessel Internals			F
Jet Pump Assemblies (Riser brace,beam/bolt assembly, riser pipe, inlet, mixer, restrainer bracket, wedge, diffuser and tailpipe, adapter/lower ring, auxiliary spring wedges and slip joint clamps/bolts)	Pressure Boundary	Stainless Steel with Stellite Cladding	Reactor Coolant and Neutron Flux	Cracking/Stress Corrosion Cracking, Intergranular Stress Corrosion Cracking, and Irradiation-Assisted Stress Corrosion Cracking	Water Chemistry			F

Table 3.1.2-2 Reactor Internals (Continued)

Component Type	Intended Function	Material	Environment	Aging Effect Requiring Management	Aging Management Programs	NUREG-1801 Vol. 2 Item	Table 1 Item	Notes
Jet Pump Assemblies (Riser brace,beam/bolt assembly, riser pipe, inlet, mixer, restrainer bracket, wedge, diffuser and tailpipe, adapter/lower ring, auxiliary spring wedges and slip joint clamps/bolts)	Pressure Boundary	Stainless Steel with Stellite Cladding	Reactor Coolant and Neutron Flux	Loss of Material/Pitting and Crevice Corrosion	BWR Vessel Internals			F
Jet Pump Assemblies (Riser brace,beam/bolt assembly, riser pipe, inlet, mixer, restrainer bracket, wedge, diffuser and tailpipe, adapter/lower ring, auxiliary spring wedges and slip joint clamps/bolts)	Pressure Boundary	Stainless Steel with Stellite Cladding	Reactor Coolant and Neutron Flux	Loss of Material/Pitting and Crevice Corrosion	Water Chemistry			F
Jet Pump Assemblies (Riser brace,beam/bolt assembly, riser pipe, inlet, mixer, restrainer bracket, wedge, diffuser and tailpipe, adapter/lower ring, auxiliary spring wedges and slip joint clamps/bolts)	Structural Support	Cast Austenitic Stainless Steel (CASS)	Reactor Coolant and Neutron Flux	Cracking/Stress Corrosion Cracking, Intergranular Stress Corrosion Cracking, and Irradiation-Assisted Stress Corrosion Cracking	BWR Vessel Internals	IV.B1-13	3.1.1-44	A

Table 3.1.2-2 Reactor Internals (Continued)

Component Type	Intended Function	Material	Environment	Aging Effect Requiring Management	Aging Management Programs	NUREG-1801 Vol. 2 Item	Table 1 Item	Notes
Jet Pump Assemblies (Riser brace,beam/bolt assembly, riser pipe, inlet, mixer, restrainer bracket, wedge, diffuser and tailpipe, adapter/lower ring, auxiliary spring wedges and slip joint clamps/bolts)	Structural Support	Cast Austenitic Stainless Steel (CASS)	Reactor Coolant and Neutron Flux	Cracking/Stress Corrosion Cracking, Intergranular Stress Corrosion Cracking, and Irradiation-Assisted Stress Corrosion Cracking	Water Chemistry	IV.B1-13	3.1.1-44	B
Jet Pump Assemblies (Riser brace,beam/bolt assembly, riser pipe, inlet, mixer, restrainer bracket, wedge, diffuser and tailpipe, adapter/lower ring, auxiliary spring wedges and slip joint clamps/bolts)	Structural Support	Cast Austenitic Stainless Steel (CASS)	Reactor Coolant and Neutron Flux	Loss of Fracture Toughness/Thermal Aging Embrittlement and Neutron Irradiation Embrittlement	Thermal Aging and Neutron Irradiation Embrittlement of Cast Austenitic Stainless Steel (CASS)	IV.B1-11	3.1.1-51	A
Jet Pump Assemblies (Riser brace,beam/bolt assembly, riser pipe, inlet, mixer, restrainer bracket, wedge, diffuser and tailpipe, adapter/lower ring, auxiliary spring wedges and slip joint clamps/bolts)	Structural Support	Cast Austenitic Stainless Steel (CASS)	Reactor Coolant and Neutron Flux	Loss of Material/Pitting and Crevice Corrosion	BWR Vessel Internals	IV.B1-15	3.1.1-47	E, 1

Table 3.1.2-2 Reactor Internals (Continued)

Component Type	Intended Function	Material	Environment	Aging Effect Requiring Management	Aging Management Programs	NUREG-1801 Vol. 2 Item	Table 1 Item	Notes
Jet Pump Assemblies (Riser brace,beam/bolt assembly, riser pipe, inlet, mixer, restrainer bracket, wedge, diffuser and tailpipe, adapter/lower ring, auxiliary spring wedges and slip joint clamps/bolts)	Structural Support	Cast Austenitic Stainless Steel (CASS)	Reactor Coolant and Neutron Flux	Loss of Material/Pitting and Crevice Corrosion	Water Chemistry	IV.B1-15	3.1.1-47	B
Jet Pump Assemblies (Riser brace,beam/bolt assembly, riser pipe, inlet, mixer, restrainer bracket, wedge, diffuser and tailpipe, adapter/lower ring, auxiliary spring wedges and slip joint clamps/bolts)	Structural Support	Nickel Alloy	Reactor Coolant and Neutron Flux	Cracking/Stress Corrosion Cracking, Intergranular Stress Corrosion Cracking, and Irradiation-Assisted Stress Corrosion Cracking	BWR Vessel Internals	IV.B1-13	3.1.1-44	A
Jet Pump Assemblies (Riser brace,beam/bolt assembly, riser pipe, inlet, mixer, restrainer bracket, wedge, diffuser and tailpipe, adapter/lower ring, auxiliary spring wedges and slip joint clamps/bolts)	Structural Support	Nickel Alloy	Reactor Coolant and Neutron Flux	Cracking/Stress Corrosion Cracking, Intergranular Stress Corrosion Cracking, and Irradiation-Assisted Stress Corrosion Cracking	Water Chemistry	IV.B1-13	3.1.1-44	B

Table 3.1.2-2 Reactor Internals (Continued)

Component Type	Intended Function	Material	Environment	Aging Effect Requiring Management	Aging Management Programs	NUREG-1801 Vol. 2 Item	Table 1 Item	Notes
Jet Pump Assemblies (Riser brace,beam/bolt assembly, riser pipe, inlet, mixer, restrainer bracket, wedge, diffuser and tailpipe, adapter/lower ring, auxiliary spring wedges and slip joint clamps/bolts)	Structural Support	Nickel Alloy	Reactor Coolant and Neutron Flux	Loss of Material/Pitting and Crevice Corrosion	BWR Vessel Internals	IV.B1-15	3.1.1-47	E, 1
Jet Pump Assemblies (Riser brace,beam/bolt assembly, riser pipe, inlet, mixer, restrainer bracket, wedge, diffuser and tailpipe, adapter/lower ring, auxiliary spring wedges and slip joint clamps/bolts)	Structural Support	Nickel Alloy	Reactor Coolant and Neutron Flux	Loss of Material/Pitting and Crevice Corrosion	Water Chemistry	IV.B1-15	3.1.1-47	B
Jet Pump Assemblies (Riser brace,beam/bolt assembly, riser pipe, inlet, mixer, restrainer bracket, wedge, diffuser and tailpipe, adapter/lower ring, auxiliary spring wedges and slip joint clamps/bolts)	Structural Support	Nickel Alloy	Reactor Coolant and Neutron Flux	Loss of Preload/Stress Relaxation	TLAA			H, 3

Table 3.1.2-2 Reactor Internals (Continued)

Component Type	Intended Function	Material	Environment	Aging Effect Requiring Management	Aging Management Programs	NUREG-1801 Vol. 2 Item	Table 1 Item	Notes
Jet Pump Assemblies (Riser brace,beam/bolt assembly, riser pipe, inlet, mixer, restrainer bracket, wedge, diffuser and tailpipe, adapter/lower ring, auxiliary spring wedges and slip joint clamps/bolts)	Structural Support	Stainless Steel	Reactor Coolant and Neutron Flux	Cracking/Stress Corrosion Cracking, Intergranular Stress Corrosion Cracking, and Irradiation-Assisted Stress Corrosion Cracking	BWR Vessel Internals	IV.B1-13	3.1.1-44	A
Jet Pump Assemblies (Riser brace,beam/bolt assembly, riser pipe, inlet, mixer, restrainer bracket, wedge, diffuser and tailpipe, adapter/lower ring, auxiliary spring wedges and slip joint clamps/bolts)	Structural Support	Stainless Steel	Reactor Coolant and Neutron Flux	Cracking/Stress Corrosion Cracking, Intergranular Stress Corrosion Cracking, and Irradiation-Assisted Stress Corrosion Cracking	Water Chemistry	IV.B1-13	3.1.1-44	B
Jet Pump Assemblies (Riser brace,beam/bolt assembly, riser pipe, inlet, mixer, restrainer bracket, wedge, diffuser and tailpipe, adapter/lower ring, auxiliary spring wedges and slip joint clamps/bolts)	Structural Support	Stainless Steel	Reactor Coolant and Neutron Flux	Loss of Material/Pitting and Crevice Corrosion	BWR Vessel Internals	IV.B1-15	3.1.1-47	E, 1

Table 3.1.2-2 Reactor Internals (Continued)

Component Type	Intended Function	Material	Environment	Aging Effect Requiring Management	Aging Management Programs	NUREG-1801 Vol. 2 Item	Table 1 Item	Notes
Jet Pump Assemblies (Riser brace,beam/bolt assembly, riser pipe, inlet, mixer, restrainer bracket, wedge, diffuser and tailpipe, adapter/lower ring, auxiliary spring wedges and slip joint clamps/bolts)	Structural Support	Stainless Steel	Reactor Coolant and Neutron Flux	Loss of Material/Pitting and Crevice Corrosion	Water Chemistry	IV.B1-15	3.1.1-47	B
Jet Pump Assemblies (Riser brace,beam/bolt assembly, riser pipe, inlet, mixer, restrainer bracket, wedge, diffuser and tailpipe, adapter/lower ring, auxiliary spring wedges and slip joint clamps/bolts)	Structural Support	Stainless Steel with Stellite Cladding	Reactor Coolant and Neutron Flux	Cracking/Stress Corrosion Cracking, Intergranular Stress Corrosion Cracking, and Irradiation-Assisted Stress Corrosion Cracking	BWR Vessel Internals			F
Jet Pump Assemblies (Riser brace,beam/bolt assembly, riser pipe, inlet, mixer, restrainer bracket, wedge, diffuser and tailpipe, adapter/lower ring, auxiliary spring wedges and slip joint clamps/bolts)	Structural Support	Stainless Steel with Stellite Cladding	Reactor Coolant and Neutron Flux	Cracking/Stress Corrosion Cracking, Intergranular Stress Corrosion Cracking, and Irradiation-Assisted Stress Corrosion Cracking	Water Chemistry			F

Table 3.1.2-2 Reactor Internals (Continued)

Component Type	Intended Function	Material	Environment	Aging Effect Requiring Management	Aging Management Programs	NUREG-1801 Vol. 2 Item	Table 1 Item	Notes
Jet Pump Assemblies (Riser brace,beam/bolt assembly, riser pipe, inlet, mixer, restrainer bracket, wedge, diffuser and tailpipe, adapter/lower ring, auxiliary spring wedges and slip joint clamps/bolts)	Structural Support	Stainless Steel with Stellite Cladding	Reactor Coolant and Neutron Flux	Loss of Material/Pitting and Crevice Corrosion	BWR Vessel Internals			F
Jet Pump Assemblies (Riser brace,beam/bolt assembly, riser pipe, inlet, mixer, restrainer bracket, wedge, diffuser and tailpipe, adapter/lower ring, auxiliary spring wedges and slip joint clamps/bolts)	Structural Support	Stainless Steel with Stellite Cladding	Reactor Coolant and Neutron Flux	Loss of Material/Pitting and Crevice Corrosion	Water Chemistry			F
Steam Dryers	Structural Support	Cast Austenitic Stainless Steel (CASS)	Reactor Coolant	Cracking/Flow-Induced Vibration	BWR Vessel Internals	IV.B1-16	3.1.1-29	E, 4
Steam Dryers	Structural Support	Cast Austenitic Stainless Steel (CASS)	Reactor Coolant	Cracking/Stress Corrosion Cracking, Intergranular Stress Corrosion Cracking, and Irradiation-Assisted Stress Corrosion Cracking	BWR Vessel Internals	IV.B1-1	3.1.1-44	C

Table 3.1.2-2 Reactor Internals (Continued)

Component Type	Intended Function	Material	Environment	Aging Effect Requiring Management	Aging Management Programs	NUREG-1801 Vol. 2 Item	Table 1 Item	Notes
Steam Dryers	Structural Support	Cast Austenitic Stainless Steel (CASS)	Reactor Coolant	Cracking/Stress Corrosion Cracking, Intergranular Stress Corrosion Cracking, and Irradiation-Assisted Stress Corrosion Cracking	Water Chemistry	IV.B1-1	3.1.1-44	D
Steam Dryers	Structural Support	Cast Austenitic Stainless Steel (CASS)	Reactor Coolant	Loss of Fracture Toughness/Thermal Aging Embrittlement and Neutron Irradiation Embrittlement	Thermal Aging and Neutron Irradiation Embrittlement of Cast Austenitic Stainless Steel (CASS)	IV.B1-9	3.1.1-51	C
Steam Dryers	Structural Support	Cast Austenitic Stainless Steel (CASS)	Reactor Coolant	Loss of Material/Pitting and Crevice Corrosion	BWR Vessel Internals	IV.B1-15	3.1.1-47	E, 1
Steam Dryers	Structural Support	Cast Austenitic Stainless Steel (CASS)	Reactor Coolant	Loss of Material/Pitting and Crevice Corrosion	Water Chemistry	IV.B1-15	3.1.1-47	B
Steam Dryers	Structural Support	Stainless Steel	Reactor Coolant	Cracking/Flow-Induced Vibration	BWR Vessel Internals	IV.B1-16	3.1.1-29	E, 4
Steam Dryers	Structural Support	Stainless Steel	Reactor Coolant	Cracking/Stress Corrosion Cracking, Intergranular Stress Corrosion Cracking, and Irradiation-Assisted Stress Corrosion Cracking	BWR Vessel Internals	IV.B1-1	3.1.1-44	C
Steam Dryers	Structural Support	Stainless Steel	Reactor Coolant	Cracking/Stress Corrosion Cracking, Intergranular Stress Corrosion Cracking, and Irradiation-Assisted Stress Corrosion Cracking	Water Chemistry	IV.B1-1	3.1.1-44	D
Steam Dryers	Structural Support	Stainless Steel	Reactor Coolant	Loss of Material/Pitting and Crevice Corrosion	BWR Vessel Internals	IV.B1-15	3.1.1-47	E, 1
Steam Dryers	Structural Support	Stainless Steel	Reactor Coolant	Loss of Material/Pitting and Crevice Corrosion	Water Chemistry	IV.B1-15	3.1.1-47	B

Table 3.1.2-2 Reactor Internals (Continued)

Component Type	Intended Function	Material	Environment	Aging Effect Requiring Management	Aging Management Programs	NUREG-1801 Vol. 2 Item	Table 1 Item	Notes
Top Guide	Structural Support to maintain core configuration and flow distribution	Stainless Steel	Reactor Coolant and Neutron Flux	Cracking/Stress Corrosion Cracking, Intergranular Stress Corrosion Cracking, and Irradiation-Assisted Stress Corrosion Cracking	BWR Vessel Internals	IV.B1-17	3.1.1-44	A
Top Guide	Structural Support to maintain core configuration and flow distribution	Stainless Steel	Reactor Coolant and Neutron Flux	Cracking/Stress Corrosion Cracking, Intergranular Stress Corrosion Cracking, and Irradiation-Assisted Stress Corrosion Cracking	Water Chemistry	IV.B1-17	3.1.1-44	B
Top Guide	Structural Support to maintain core configuration and flow distribution	Stainless Steel	Reactor Coolant and Neutron Flux	Cumulative Fatigue Damage/Fatigue	TLAA	IV.B1-14	3.1.1-5	A, 2
Top Guide	Structural Support to maintain core configuration and flow distribution	Stainless Steel	Reactor Coolant and Neutron Flux	Loss of Material/Pitting and Crevice Corrosion	BWR Vessel Internals	IV.B1-15	3.1.1-47	E, 1
Top Guide	Structural Support to maintain core configuration and flow distribution	Stainless Steel	Reactor Coolant and Neutron Flux	Loss of Material/Pitting and Crevice Corrosion	Water Chemistry	IV.B1-15	3.1.1-47	B

Notes	Definition of Note
A	Consistent with NUREG-1801 item for component, material, environment, and aging effect. AMP is consistent with NUREG-1801 AMP.
B	Consistent with NUREG-1801 item for component, material, environment, and aging effect. AMP takes some exceptions to NUREG-1801 AMP.
C	Component is different, but consistent with NUREG-1801 item for material, environment, and aging effect. AMP is consistent with NUREG-1801 AMP.
D	Component is different, but consistent with NUREG-1801 item for material, environment, and aging effect. AMP takes some exceptions to NUREG-1801 AMP.
E	Consistent with NUREG-1801 item for material, environment and aging effect, but a different aging management program is credited or NUREG-1801 identifies a plant-specific aging management program.
F	Material not in NUREG-1801 for this component.
G	Environment not in NUREG-1801 for this component and material.
H	Aging effect not in NUREG-1801 for this component, material and environment combination.
I	Aging effect in NUREG-1801 for this component, material and environment combination is not applicable.
J	Neither the component nor the material and environment combination is evaluated in NUREG-1801.

Plant Specific Notes:

1. The BWR Vessel Internals program is substituted to manage the aging effect(s) applicable to the component type, material, and environment combination.

2. The TLAA designation in the Aging Management Program column indicates fatigue of the Core Plate and Top Guide are evaluated in Section 4.3.

3. The core plate rim bolts and Jet Pump auxiliary spring wedge and slip joint bolts require a plant specific analysis to demonstrate high fluence does not lead to loss of pre-load and stress relaxation. Further details can be found in sections 4.2.7 and 4.7.3 of the application.

4. NUREG-1801 specifies a plant-specific aging management program. The BWR Vessel Internals Inspection program is used to manage the aging effect applicable to this component type, material, and environment combination.

Table 3.1.2-3
Reactor Pressure Vessel
Summary of Aging Management Evaluation

Table 3.1.2-3 Reactor Pressure Vessel

Component Type	Intended Function	Material	Environment	Aging Effect Requiring Management	Aging Management Programs	NUREG-1801 Vol. 2 Item	Table 1 Item	Notes
Bolting (Class 1) Head Spray, Spare Flanges, CRDs, and Incore Neutron Monitors	Mechanical Closure	Carbon and Low Alloy Steel Bolting	Air - Indoor (External)	Cumulative Fatigue Damage/Fatigue	TLAA	IV.C1-11	3.1.1-4	A, 1
Bolting (Class 1) Head Spray, Spare Flanges, CRDs, and Incore Neutron Monitors	Mechanical Closure	Carbon and Low Alloy Steel Bolting	Air - Indoor (External)	Loss of Material/General, Pitting and Crevice Corrosion	Bolting Integrity	V.E-4	3.2.1-23	B
Bolting (Class 1) Head Spray, Spare Flanges, CRDs, and Incore Neutron Monitors	Mechanical Closure	Carbon and Low Alloy Steel Bolting	Air - Indoor (External)	Loss of Preload/Thermal Effects, Gasket Creep, and Self-Loosening	Bolting Integrity	IV.C1-10	3.1.1-52	B
Bolting (Class 1) Top Head Studs and Nuts	Mechanical Closure	High Strength Low Alloy Steel Bolting with Yield Strength of 150 ksi or Greater	Air - Indoor (External)	Cracking/Stress Corrosion Cracking	Reactor Head Closure Studs	IV.A1-9	3.1.1-50	A
Bolting (Class 1) Top Head Studs and Nuts	Mechanical Closure	High Strength Low Alloy Steel Bolting with Yield Strength of 150 ksi or Greater	Air - Indoor (External)	Cumulative Fatigue Damage/Fatigue	TLAA	IV.C1-11	3.1.1-4	C, 1
Bolting (Class 1) Top Head Studs and Nuts	Mechanical Closure	High Strength Low Alloy Steel Bolting with Yield Strength of 150 ksi or Greater	Air - Indoor (External)	Loss of Material/General, Pitting and Crevice Corrosion	Reactor Head Closure Studs			H, 3

Table 3.1.2-3 Reactor Pressure Vessel (Continued)

Component Type	Intended Function	Material	Environment	Aging Effect Requiring Management	Aging Management Programs	NUREG-1801 Vol. 2 Item	Table 1 Item	Notes
Nozzle (Bottom Head Drain)	Pressure Boundary	Carbon Steel	Air - Indoor (External)	Loss of Material/General Corrosion	External Surfaces Monitoring	VII.D-3	3.3.1-57	A
Nozzle (Bottom Head Drain)	Pressure Boundary	Carbon Steel	Reactor Coolant (Internal)	Cumulative Fatigue Damage/Fatigue	TLAA	IV.A1-7	3.1.1-2	A, 1
Nozzle (Bottom Head Drain)	Pressure Boundary	Carbon Steel	Reactor Coolant (Internal)	Loss of Material/General, Pitting and Crevice Corrosion	One-Time Inspection	IV.A1-11	3.1.1-11	C
Nozzle (Bottom Head Drain)	Pressure Boundary	Carbon Steel	Reactor Coolant (Internal)	Loss of Material/General, Pitting and Crevice Corrosion	Water Chemistry	IV.A1-11	3.1.1-11	D
Nozzle (CRD Return)	Pressure Boundary	Carbon or Low Alloy Steel with Stainless Steel Cladding	Air - Indoor (External)	Loss of Material/General Corrosion	External Surfaces Monitoring	VII.D-3	3.3.1-57	A
Nozzle (CRD Return)	Pressure Boundary	Carbon or Low Alloy Steel with Stainless Steel Cladding	Reactor Coolant (Internal)	Cracking/Cyclic Loading	BWR Control Rod Drive Return Line Nozzle	IV.A1-2	3.1.1-38	A
Nozzle (CRD Return)	Pressure Boundary	Carbon or Low Alloy Steel with Stainless Steel Cladding	Reactor Coolant (Internal)	Cracking/Stress Corrosion Cracking	ASME Section XI Inservice Inspection, Subsections IWB, IWC, and IWD	IV.A1-1	3.1.1-41	E, 2
Nozzle (CRD Return)	Pressure Boundary	Carbon or Low Alloy Steel with Stainless Steel Cladding	Reactor Coolant (Internal)	Cracking/Stress Corrosion Cracking	Water Chemistry	IV.A1-1	3.1.1-41	E, 2
Nozzle (CRD Return)	Pressure Boundary	Carbon or Low Alloy Steel with Stainless Steel Cladding	Reactor Coolant (Internal)	Cumulative Fatigue Damage/Fatigue	TLAA	IV.A1-7	3.1.1-2	A, 1
Nozzle (CRD Return)	Pressure Boundary	Carbon or Low Alloy Steel with Stainless Steel Cladding	Reactor Coolant (Internal)	Loss of Material/Pitting and Crevice Corrosion	One-Time Inspection	IV.A1-8	3.1.1-14	A

Table 3.1.2-3 Reactor Pressure Vessel (Continued)

Component Type	Intended Function	Material	Environment	Aging Effect Requiring Management	Aging Management Programs	NUREG-1801 Vol. 2 Item	Table 1 Item	Notes
Nozzle (CRD Return)	Pressure Boundary	Carbon or Low Alloy Steel with Stainless Steel Cladding	Reactor Coolant (Internal)	Loss of Material/Pitting and Crevice Corrosion	Water Chemistry	IV.A1-8	3.1.1-14	B
Nozzle (Core Spray)	Pressure Boundary	Carbon or Low Alloy Steel with Stainless Steel Cladding	Air - Indoor (External)	Loss of Material/General Corrosion	External Surfaces Monitoring	VII.D-3	3.3.1-57	A
Nozzle (Core Spray)	Pressure Boundary	Carbon or Low Alloy Steel with Stainless Steel Cladding	Reactor Coolant (Internal)	Cracking/Stress Corrosion Cracking	ASME Section XI Inservice Inspection, Subsections IWB, IWC, and IWD	IV.A1-1	3.1.1-41	E, 2
Nozzle (Core Spray)	Pressure Boundary	Carbon or Low Alloy Steel with Stainless Steel Cladding	Reactor Coolant (Internal)	Cracking/Stress Corrosion Cracking	Water Chemistry	IV.A1-1	3.1.1-41	E, 2
Nozzle (Core Spray)	Pressure Boundary	Carbon or Low Alloy Steel with Stainless Steel Cladding	Reactor Coolant (Internal)	Cumulative Fatigue Damage/Fatigue	TLAA	IV.A1-7	3.1.1-2	A, 1
Nozzle (Core Spray)	Pressure Boundary	Carbon or Low Alloy Steel with Stainless Steel Cladding	Reactor Coolant (Internal)	Loss of Material/Pitting and Crevice Corrosion	One-Time Inspection	IV.A1-8	3.1.1-14	A
Nozzle (Core Spray)	Pressure Boundary	Carbon or Low Alloy Steel with Stainless Steel Cladding	Reactor Coolant (Internal)	Loss of Material/Pitting and Crevice Corrosion	Water Chemistry	IV.A1-8	3.1.1-14	B
Nozzle (Feedwater)	Pressure Boundary	Low Alloy Steel	Air - Indoor (External)	Loss of Material/General Corrosion	External Surfaces Monitoring	VII.D-3	3.3.1-57	A
Nozzle (Feedwater)	Pressure Boundary	Low Alloy Steel	Reactor Coolant (Internal)	Cracking/Cyclic Loading	BWR Feedwater Nozzle	IV.A1-3	3.1.1-39	A
Nozzle (Feedwater)	Pressure Boundary	Low Alloy Steel	Reactor Coolant (Internal)	Cumulative Fatigue Damage/Fatigue	TLAA	IV.A1-7	3.1.1-2	A, 1

Table 3.1.2-3 Reactor Pressure Vessel (Continued)

Component Type	Intended Function	Material	Environment	Aging Effect Requiring Management	Aging Management Programs	NUREG-1801 Vol. 2 Item	Table 1 Item	Notes
Nozzle (Feedwater)	Pressure Boundary	Low Alloy Steel	Reactor Coolant (Internal)	Loss of Material/General, Pitting and Crevice Corrosion	One-Time Inspection	IV.A1-11	3.1.1-11	C
Nozzle (Feedwater)	Pressure Boundary	Low Alloy Steel	Reactor Coolant (Internal)	Loss of Material/General, Pitting and Crevice Corrosion	Water Chemistry	IV.A1-11	3.1.1-11	D
Nozzle (Head Spray)	Pressure Boundary	Low Alloy Steel	Air - Indoor (External)	Loss of Material/General Corrosion	External Surfaces Monitoring	VII.D-3	3.3.1-57	A
Nozzle (Head Spray)	Pressure Boundary	Low Alloy Steel	Reactor Coolant (Internal)	Cumulative Fatigue Damage/Fatigue	TLAA	IV.A1-7	3.1.1-2	A, 1
Nozzle (Head Spray)	Pressure Boundary	Low Alloy Steel	Reactor Coolant (Internal)	Loss of Material/General, Pitting and Crevice Corrosion	One-Time Inspection	IV.A1-11	3.1.1-11	A
Nozzle (Head Spray)	Pressure Boundary	Low Alloy Steel	Reactor Coolant (Internal)	Loss of Material/General, Pitting and Crevice Corrosion	Water Chemistry	IV.A1-11	3.1.1-11	B
Nozzle (Head Vent)	Pressure Boundary	Low Alloy Steel	Air - Indoor (External)	Loss of Material/General Corrosion	External Surfaces Monitoring	VII.D-3	3.3.1-57	A
Nozzle (Head Vent)	Pressure Boundary	Low Alloy Steel	Reactor Coolant (Internal)	Cumulative Fatigue Damage/Fatigue	TLAA	IV.A1-7	3.1.1-2	A, 1
Nozzle (Head Vent)	Pressure Boundary	Low Alloy Steel	Reactor Coolant (Internal)	Loss of Material/General, Pitting and Crevice Corrosion	One-Time Inspection	IV.A1-11	3.1.1-11	A
Nozzle (Head Vent)	Pressure Boundary	Low Alloy Steel	Reactor Coolant (Internal)	Loss of Material/General, Pitting and Crevice Corrosion	Water Chemistry	IV.A1-11	3.1.1-11	B
Nozzle (Instrumentation - Beltline)	Pressure Boundary	Carbon Steel	Air - Indoor (External)	Loss of Material/General Corrosion	External Surfaces Monitoring	VII.D-3	3.3.1-57	A
Nozzle (Instrumentation - Beltline)	Pressure Boundary	Carbon Steel	Reactor Coolant and Neutron Flux (Internal)	Cumulative Fatigue Damage/Fatigue	TLAA	IV.A1-7	3.1.1-2	A, 1

Table 3.1.2-3 Reactor Pressure Vessel (Continued)

Component Type	Intended Function	Material	Environment	Aging Effect Requiring Management	Aging Management Programs	NUREG-1801 Vol. 2 Item	Table 1 Item	Notes
Nozzle (Instrumentation - Beltline)	Pressure Boundary	Carbon Steel	Reactor Coolant and Neutron Flux (Internal)	Loss of Fracture Toughness/Neutron Irradiation Embrittlement	TLAA	IV.A1-4	3.1.1-17	C, 1
Nozzle (Instrumentation - Beltline)	Pressure Boundary	Carbon Steel	Reactor Coolant and Neutron Flux (Internal)	Loss of Material/General, Pitting and Crevice Corrosion	One-Time Inspection	IV.A1-11	3.1.1-11	C
Nozzle (Instrumentation - Beltline)	Pressure Boundary	Carbon Steel	Reactor Coolant and Neutron Flux (Internal)	Loss of Material/General, Pitting and Crevice Corrosion	Water Chemistry	IV.A1-11	3.1.1-11	D
Nozzle (Instrumentation - Beltline)	Pressure Boundary	Nickel Alloy (Weld)	Reactor Coolant and Neutron Flux (Internal)	Cracking/Stress Corrosion Cracking	BWR Penetrations	IV.A1-5	3.1.1-40	A
Nozzle (Instrumentation - Beltline)	Pressure Boundary	Nickel Alloy (Weld)	Reactor Coolant and Neutron Flux (Internal)	Cracking/Stress Corrosion Cracking	Water Chemistry	IV.A1-5	3.1.1-40	B
Nozzle (Instrumentation - Beltline)	Pressure Boundary	Nickel Alloy (Weld)	Reactor Coolant and Neutron Flux (Internal)	Cumulative Fatigue Damage/Fatigue	TLAA	IV.A1-7	3.1.1-2	A, 1
Nozzle (Instrumentation - Beltline)	Pressure Boundary	Nickel Alloy (Weld)	Reactor Coolant and Neutron Flux (Internal)	Loss of Material/Pitting and Crevice Corrosion	One-Time Inspection	IV.A1-8	3.1.1-14	A
Nozzle (Instrumentation - Beltline)	Pressure Boundary	Nickel Alloy (Weld)	Reactor Coolant and Neutron Flux (Internal)	Loss of Material/Pitting and Crevice Corrosion	Water Chemistry	IV.A1-8	3.1.1-14	B
Nozzle (Instrumentation)	Pressure Boundary	Carbon Steel	Air - Indoor (External)	Loss of Material/General Corrosion	External Surfaces Monitoring	VII.D-3	3.3.1-57	A
Nozzle (Instrumentation)	Pressure Boundary	Carbon Steel	Reactor Coolant (Internal)	Cumulative Fatigue Damage/Fatigue	TLAA	IV.A1-7	3.1.1-2	A, 1
Nozzle (Instrumentation)	Pressure Boundary	Carbon Steel	Reactor Coolant (Internal)	Loss of Material/General, Pitting and Crevice Corrosion	One-Time Inspection	IV.A1-11	3.1.1-11	C
Nozzle (Instrumentation)	Pressure Boundary	Carbon Steel	Reactor Coolant (Internal)	Loss of Material/General, Pitting and Crevice Corrosion	Water Chemistry	IV.A1-11	3.1.1-11	D

Table 3.1.2-3 Reactor Pressure Vessel (Continued)

Component Type	Intended Function	Material	Environment	Aging Effect Requiring Management	Aging Management Programs	NUREG-1801 Vol. 2 Item	Table 1 Item	Notes
Nozzle (Instrumentation)	Pressure Boundary	Nickel Alloy (Weld)	Reactor Coolant	Cracking/Stress Corrosion Cracking	BWR Penetrations	IV.A1-5	3.1.1-40	A
Nozzle (Instrumentation)	Pressure Boundary	Nickel Alloy (Weld)	Reactor Coolant	Cracking/Stress Corrosion Cracking	Water Chemistry	IV.A1-5	3.1.1-40	B
Nozzle (Instrumentation)	Pressure Boundary	Nickel Alloy (Weld)	Reactor Coolant	Cumulative Fatigue Damage/Fatigue	TLAA	IV.A1-7	3.1.1-2	A, 1
Nozzle (Instrumentation)	Pressure Boundary	Nickel Alloy (Weld)	Reactor Coolant	Loss of Material/Pitting and Crevice Corrosion	One-Time Inspection	IV.A1-8	3.1.1-14	A
Nozzle (Instrumentation)	Pressure Boundary	Nickel Alloy (Weld)	Reactor Coolant	Loss of Material/Pitting and Crevice Corrosion	Water Chemistry	IV.A1-8	3.1.1-14	B
Nozzle (Jet Pump Instrumentation)	Pressure Boundary	Carbon or Low Alloy Steel with Stainless Steel Cladding	Air - Indoor (External)	Loss of Material/General Corrosion	External Surfaces Monitoring	VII.D-3	3.3.1-57	A
Nozzle (Jet Pump Instrumentation)	Pressure Boundary	Carbon or Low Alloy Steel with Stainless Steel Cladding	Reactor Coolant (Internal)	Cracking/Stress Corrosion Cracking	ASME Section XI Inservice Inspection, Subsections IWB, IWC, and IWD	IV.A1-1	3.1.1-41	E, 2
Nozzle (Jet Pump Instrumentation)	Pressure Boundary	Carbon or Low Alloy Steel with Stainless Steel Cladding	Reactor Coolant (Internal)	Cracking/Stress Corrosion Cracking	Water Chemistry	IV.A1-1	3.1.1-41	E, 2
Nozzle (Jet Pump Instrumentation)	Pressure Boundary	Carbon or Low Alloy Steel with Stainless Steel Cladding	Reactor Coolant (Internal)	Cumulative Fatigue Damage/Fatigue	TLAA	IV.A1-7	3.1.1-2	A, 1
Nozzle (Jet Pump Instrumentation)	Pressure Boundary	Carbon or Low Alloy Steel with Stainless Steel Cladding	Reactor Coolant (Internal)	Loss of Material/Pitting and Crevice Corrosion	One-Time Inspection	IV.A1-8	3.1.1-14	A
Nozzle (Jet Pump Instrumentation)	Pressure Boundary	Carbon or Low Alloy Steel with Stainless Steel Cladding	Reactor Coolant (Internal)	Loss of Material/Pitting and Crevice Corrosion	Water Chemistry	IV.A1-8	3.1.1-14	B

Table 3.1.2-3 Reactor Pressure Vessel (Continued)

Component Type	Intended Function	Material	Environment	Aging Effect Requiring Management	Aging Management Programs	NUREG-1801 Vol. 2 Item	Table 1 Item	Notes
Nozzle (Low Pressure Coolant Injection)	Pressure Boundary	Low Alloy Steel	Air - Indoor (External)	Loss of Material/General Corrosion	External Surfaces Monitoring	VII.D-3	3.3.1-57	A
Nozzle (Low Pressure Coolant Injection)	Pressure Boundary	Low Alloy Steel	Reactor Coolant and Neutron Flux (Internal)	Cumulative Fatigue Damage/Fatigue	TLAA	IV.A1-7	3.1.1-2	A, 1
Nozzle (Low Pressure Coolant Injection)	Pressure Boundary	Low Alloy Steel	Reactor Coolant and Neutron Flux (Internal)	Loss of Fracture Toughness/Neutron Irradiation Embrittlement	TLAA	IV.A1-4	3.1.1-17	A, 1
Nozzle (Low Pressure Coolant Injection)	Pressure Boundary	Low Alloy Steel	Reactor Coolant and Neutron Flux (Internal)	Loss of Material/General, Pitting and Crevice Corrosion	One-Time Inspection	IV.A1-11	3.1.1-11	C
Nozzle (Low Pressure Coolant Injection)	Pressure Boundary	Low Alloy Steel	Reactor Coolant and Neutron Flux (Internal)	Loss of Material/General, Pitting and Crevice Corrosion	Water Chemistry	IV.A1-11	3.1.1-11	D
Nozzle (Main Steam)	Pressure Boundary	Low Alloy Steel	Air - Indoor (External)	Loss of Material/General Corrosion	External Surfaces Monitoring	VII.D-3	3.3.1-57	A
Nozzle (Main Steam)	Pressure Boundary	Low Alloy Steel	Reactor Coolant (Internal)	Cumulative Fatigue Damage/Fatigue	TLAA	IV.A1-7	3.1.1-2	A, 1
Nozzle (Main Steam)	Pressure Boundary	Low Alloy Steel	Reactor Coolant (Internal)	Loss of Material/General, Pitting and Crevice Corrosion	One-Time Inspection	IV.A1-11	3.1.1-11	C
Nozzle (Main Steam)	Pressure Boundary	Low Alloy Steel	Reactor Coolant (Internal)	Loss of Material/General, Pitting and Crevice Corrosion	Water Chemistry	IV.A1-11	3.1.1-11	D
Nozzle (Recirculation Inlet & Outlet)	Pressure Boundary	Carbon or Low Alloy Steel with Stainless Steel Cladding	Air - Indoor (External)	Loss of Material/General Corrosion	External Surfaces Monitoring	VII.D-3	3.3.1-57	A
Nozzle (Recirculation Inlet & Outlet)	Pressure Boundary	Carbon or Low Alloy Steel with Stainless Steel Cladding	Reactor Coolant (Internal)	Cracking/Stress Corrosion Cracking	ASME Section XI Inservice Inspection, Subsections IWB, IWC, and IWD	IV.A1-1	3.1.1-41	E, 2

Table 3.1.2-3 Reactor Pressure Vessel (Continued)

Component Type	Intended Function	Material	Environment	Aging Effect Requiring Management	Aging Management Programs	NUREG-1801 Vol. 2 Item	Table 1 Item	Notes
Nozzle (Recirculation Inlet & Outlet)	Pressure Boundary	Carbon or Low Alloy Steel with Stainless Steel Cladding	Reactor Coolant (Internal)	Cracking/Stress Corrosion Cracking	Water Chemistry	IV.A1-1	3.1.1-41	E, 2
Nozzle (Recirculation Inlet & Outlet)	Pressure Boundary	Carbon or Low Alloy Steel with Stainless Steel Cladding	Reactor Coolant (Internal)	Cumulative Fatigue Damage/Fatigue	TLAA	IV.A1-7	3.1.1-2	A, 1
Nozzle (Recirculation Inlet & Outlet)	Pressure Boundary	Carbon or Low Alloy Steel with Stainless Steel Cladding	Reactor Coolant (Internal)	Loss of Material/Pitting and Crevice Corrosion	One-Time Inspection	IV.A1-8	3.1.1-14	A
Nozzle (Recirculation Inlet & Outlet)	Pressure Boundary	Carbon or Low Alloy Steel with Stainless Steel Cladding	Reactor Coolant (Internal)	Loss of Material/Pitting and Crevice Corrosion	Water Chemistry	IV.A1-8	3.1.1-14	B
Nozzle (Seal Leak Detection)	Pressure Boundary	Low Alloy Steel	Air - Indoor (External)	Loss of Material/General Corrosion	External Surfaces Monitoring	VII.D-3	3.3.1-57	A
Nozzle (Seal Leak Detection)	Pressure Boundary	Low Alloy Steel	Reactor Coolant (Internal)	Cumulative Fatigue Damage/Fatigue	TLAA	IV.A1-7	3.1.1-2	A, 1
Nozzle (Seal Leak Detection)	Pressure Boundary	Low Alloy Steel	Reactor Coolant (Internal)	Loss of Material/General, Pitting and Crevice Corrosion	One-Time Inspection	IV.A1-11	3.1.1-11	A
Nozzle (Seal Leak Detection)	Pressure Boundary	Low Alloy Steel	Reactor Coolant (Internal)	Loss of Material/General, Pitting and Crevice Corrosion	Water Chemistry	IV.A1-11	3.1.1-11	B
Nozzle (Spare on Head)	Pressure Boundary	Low Alloy Steel	Air - Indoor (External)	Loss of Material/General Corrosion	External Surfaces Monitoring	VII.D-3	3.3.1-57	A
Nozzle (Spare on Head)	Pressure Boundary	Low Alloy Steel	Reactor Coolant (Internal)	Cumulative Fatigue Damage/Fatigue	TLAA	IV.A1-7	3.1.1-2	A, 1
Nozzle (Spare on Head)	Pressure Boundary	Low Alloy Steel	Reactor Coolant (Internal)	Loss of Material/General, Pitting and Crevice Corrosion	One-Time Inspection	IV.A1-11	3.1.1-11	A

Table 3.1.2-3 Reactor Pressure Vessel (Continued)

Component Type	Intended Function	Material	Environment	Aging Effect Requiring Management	Aging Management Programs	NUREG-1801 Vol. 2 Item	Table 1 Item	Notes
Nozzle (Spare on Head)	Pressure Boundary	Low Alloy Steel	Reactor Coolant (Internal)	Loss of Material/General, Pitting and Crevice Corrosion	Water Chemistry	IV.A1-11	3.1.1-11	B
Nozzle (Standby Liquid Control / Core DP)	Pressure Boundary	Nickel Alloy	Air - Indoor (External)	None	None	IV.E-1	3.1.1-85	A
Nozzle (Standby Liquid Control / Core DP)	Pressure Boundary	Nickel Alloy	Reactor Coolant (Internal)	Cracking/Stress Corrosion Cracking	ASME Section XI Inservice Inspection, Subsections IWB, IWC, and IWD	IV.A1-1	3.1.1-41	E, 2
Nozzle (Standby Liquid Control / Core DP)	Pressure Boundary	Nickel Alloy	Reactor Coolant (Internal)	Cracking/Stress Corrosion Cracking	Water Chemistry	IV.A1-1	3.1.1-41	E, 2
Nozzle (Standby Liquid Control / Core DP)	Pressure Boundary	Nickel Alloy	Reactor Coolant (Internal)	Cumulative Fatigue Damage/Fatigue	TLAA	IV.A1-7	3.1.1-2	A, 1
Nozzle (Standby Liquid Control / Core DP)	Pressure Boundary	Nickel Alloy	Reactor Coolant (Internal)	Loss of Material/Pitting and Crevice Corrosion	One-Time Inspection	IV.A1-8	3.1.1-14	A
Nozzle (Standby Liquid Control / Core DP)	Pressure Boundary	Nickel Alloy	Reactor Coolant (Internal)	Loss of Material/Pitting and Crevice Corrosion	Water Chemistry	IV.A1-8	3.1.1-14	B
Nozzle Safe Ends and Welds (Core Spray)	Pressure Boundary	Carbon Steel	Air - Indoor (External)	Loss of Material/General Corrosion	External Surfaces Monitoring	VII.D-3	3.3.1-57	A
Nozzle Safe Ends and Welds (Core Spray)	Pressure Boundary	Carbon Steel	Reactor Coolant (Internal)	Cumulative Fatigue Damage/Fatigue	TLAA	IV.A1-7	3.1.1-2	A, 1
Nozzle Safe Ends and Welds (Core Spray)	Pressure Boundary	Carbon Steel	Reactor Coolant (Internal)	Loss of Material/General, Pitting and Crevice Corrosion	One-Time Inspection	IV.A1-11	3.1.1-11	C
Nozzle Safe Ends and Welds (Core Spray)	Pressure Boundary	Carbon Steel	Reactor Coolant (Internal)	Loss of Material/General, Pitting and Crevice Corrosion	Water Chemistry	IV.A1-11	3.1.1-11	D

Table 3.1.2-3 Reactor Pressure Vessel (Continued)

Component Type	Intended Function	Material	Environment	Aging Effect Requiring Management	Aging Management Programs	NUREG-1801 Vol. 2 Item	Table 1 Item	Notes
Nozzle Safe Ends and Welds (Core Spray)	Pressure Boundary	Nickel Alloy (Safe End)	Air - Indoor (External)	None	None	IV.E-1	3.1.1-85	A
Nozzle Safe Ends and Welds (Core Spray)	Pressure Boundary	Nickel Alloy (Safe End)	Reactor Coolant (Internal)	Cracking/Stress Corrosion Cracking	BWR Stress Corrosion Cracking	IV.A1-1	3.1.1-41	A
Nozzle Safe Ends and Welds (Core Spray)	Pressure Boundary	Nickel Alloy (Safe End)	Reactor Coolant (Internal)	Cracking/Stress Corrosion Cracking	Water Chemistry	IV.A1-1	3.1.1-41	B
Nozzle Safe Ends and Welds (Core Spray)	Pressure Boundary	Nickel Alloy (Safe End)	Reactor Coolant (Internal)	Cumulative Fatigue Damage/Fatigue	TLAA	IV.A1-7	3.1.1-2	A, 1
Nozzle Safe Ends and Welds (Core Spray)	Pressure Boundary	Nickel Alloy (Safe End)	Reactor Coolant (Internal)	Loss of Material/Pitting and Crevice Corrosion	One-Time Inspection	IV.A1-8	3.1.1-14	A
Nozzle Safe Ends and Welds (Core Spray)	Pressure Boundary	Nickel Alloy (Safe End)	Reactor Coolant (Internal)	Loss of Material/Pitting and Crevice Corrosion	Water Chemistry	IV.A1-8	3.1.1-14	B
Nozzle Safe Ends and Welds (Feedwater)	Pressure Boundary	Carbon Steel	Air - Indoor (External)	Loss of Material/General Corrosion	External Surfaces Monitoring	VII.D-3	3.3.1-57	A
Nozzle Safe Ends and Welds (Feedwater)	Pressure Boundary	Carbon Steel	Reactor Coolant (Internal)	Cumulative Fatigue Damage/Fatigue	TLAA	IV.A1-7	3.1.1-2	A, 1
Nozzle Safe Ends and Welds (Feedwater)	Pressure Boundary	Carbon Steel	Reactor Coolant (Internal)	Loss of Material/General, Pitting and Crevice Corrosion	One-Time Inspection	IV.A1-11	3.1.1-11	C
Nozzle Safe Ends and Welds (Feedwater)	Pressure Boundary	Carbon Steel	Reactor Coolant (Internal)	Loss of Material/General, Pitting and Crevice Corrosion	Water Chemistry	IV.A1-11	3.1.1-11	D
Nozzle Safe Ends and Welds (Head Spray)	Pressure Boundary	Low Alloy Steel	Air - Indoor (External)	Loss of Material/General Corrosion	External Surfaces Monitoring	VII.D-3	3.3.1-57	A

Table 3.1.2-3 Reactor Pressure Vessel (Continued)

Component Type	Intended Function	Material	Environment	Aging Effect Requiring Management	Aging Management Programs	NUREG-1801 Vol. 2 Item	Table 1 Item	Notes
Nozzle Safe Ends and Welds (Head Spray)	Pressure Boundary	Low Alloy Steel	Reactor Coolant (Internal)	Cumulative Fatigue Damage/Fatigue	TLAA	IV.A1-7	3.1.1-2	A, 1
Nozzle Safe Ends and Welds (Head Spray)	Pressure Boundary	Low Alloy Steel	Reactor Coolant (Internal)	Loss of Material/General, Pitting and Crevice Corrosion	One-Time Inspection	IV.A1-11	3.1.1-11	C
Nozzle Safe Ends and Welds (Head Spray)	Pressure Boundary	Low Alloy Steel	Reactor Coolant (Internal)	Loss of Material/General, Pitting and Crevice Corrosion	Water Chemistry	IV.A1-11	3.1.1-11	D
Nozzle Safe Ends and Welds (Head Spray)	Pressure Boundary	Nickel Alloy (Weld)	Air - Indoor (External)	None	None	IV.E-1	3.1.1-85	A
Nozzle Safe Ends and Welds (Head Spray)	Pressure Boundary	Nickel Alloy (Weld)	Reactor Coolant (Internal)	Cracking/Stress Corrosion Cracking	BWR Stress Corrosion Cracking	IV.A1-1	3.1.1-41	A
Nozzle Safe Ends and Welds (Head Spray)	Pressure Boundary	Nickel Alloy (Weld)	Reactor Coolant (Internal)	Cracking/Stress Corrosion Cracking	Water Chemistry	IV.A1-1	3.1.1-41	B
Nozzle Safe Ends and Welds (Head Spray)	Pressure Boundary	Nickel Alloy (Weld)	Reactor Coolant (Internal)	Cumulative Fatigue Damage/Fatigue	TLAA	IV.A1-7	3.1.1-2	A, 1
Nozzle Safe Ends and Welds (Head Spray)	Pressure Boundary	Nickel Alloy (Weld)	Reactor Coolant (Internal)	Loss of Material/Pitting and Crevice Corrosion	One-Time Inspection	IV.A1-8	3.1.1-14	A
Nozzle Safe Ends and Welds (Head Spray)	Pressure Boundary	Nickel Alloy (Weld)	Reactor Coolant (Internal)	Loss of Material/Pitting and Crevice Corrosion	Water Chemistry	IV.A1-8	3.1.1-14	B
Nozzle Safe Ends and Welds (Jet Pump Instrumentation)	Pressure Boundary	Stainless Steel	Air - Indoor (External)	None	None	IV.E-2	3.1.1-86	A
Nozzle Safe Ends and Welds (Jet Pump Instrumentation)	Pressure Boundary	Stainless Steel	Reactor Coolant (Internal)	Cracking/Stress Corrosion Cracking	BWR Stress Corrosion Cracking	IV.A1-1	3.1.1-41	A

Table 3.1.2-3 Reactor Pressure Vessel (Continued)

Component Type	Intended Function	Material	Environment	Aging Effect Requiring Management	Aging Management Programs	NUREG-1801 Vol. 2 Item	Table 1 Item	Notes
Nozzle Safe Ends and Welds (Jet Pump Instrumentation)	Pressure Boundary	Stainless Steel	Reactor Coolant (Internal)	Cracking/Stress Corrosion Cracking	Water Chemistry	IV.A1-1	3.1.1-41	B
Nozzle Safe Ends and Welds (Jet Pump Instrumentation)	Pressure Boundary	Stainless Steel	Reactor Coolant (Internal)	Cumulative Fatigue Damage/Fatigue	TLAA	IV.A1-7	3.1.1-2	A, 1
Nozzle Safe Ends and Welds (Jet Pump Instrumentation)	Pressure Boundary	Stainless Steel	Reactor Coolant (Internal)	Loss of Material/Pitting and Crevice Corrosion	One-Time Inspection	IV.A1-8	3.1.1-14	A
Nozzle Safe Ends and Welds (Jet Pump Instrumentation)	Pressure Boundary	Stainless Steel	Reactor Coolant (Internal)	Loss of Material/Pitting and Crevice Corrosion	Water Chemistry	IV.A1-8	3.1.1-14	B
Nozzle Safe Ends and Welds (Low Pressure Coolant Injection)	Pressure Boundary	Carbon Steel	Air - Indoor (External)	Loss of Material/General Corrosion	External Surfaces Monitoring	VII.D-3	3.3.1-57	A
Nozzle Safe Ends and Welds (Low Pressure Coolant Injection)	Pressure Boundary	Carbon Steel	Reactor Coolant and Neutron Flux (Internal)	Cumulative Fatigue Damage/Fatigue	TLAA	IV.A1-7	3.1.1-2	A, 1
Nozzle Safe Ends and Welds (Low Pressure Coolant Injection)	Pressure Boundary	Carbon Steel	Reactor Coolant and Neutron Flux (Internal)	Loss of Fracture Toughness/Neutron Irradiation Embrittlement	TLAA	IV.A1-4	3.1.1-17	C, 1
Nozzle Safe Ends and Welds (Low Pressure Coolant Injection)	Pressure Boundary	Carbon Steel	Reactor Coolant and Neutron Flux (Internal)	Loss of Material/General, Pitting and Crevice Corrosion	One-Time Inspection	IV.A1-11	3.1.1-11	C
Nozzle Safe Ends and Welds (Low Pressure Coolant Injection)	Pressure Boundary	Carbon Steel	Reactor Coolant and Neutron Flux (Internal)	Loss of Material/General, Pitting and Crevice Corrosion	Water Chemistry	IV.A1-11	3.1.1-11	D

Table 3.1.2-3 Reactor Pressure Vessel (Continued)

Component Type	Intended Function	Material	Environment	Aging Effect Requiring Management	Aging Management Programs	NUREG-1801 Vol. 2 Item	Table 1 Item	Notes
Nozzle Safe Ends and Welds (Main Steam)	Pressure Boundary	Carbon Steel	Air - Indoor (External)	Loss of Material/General Corrosion	External Surfaces Monitoring	VII.D-3	3.3.1-57	A
Nozzle Safe Ends and Welds (Main Steam)	Pressure Boundary	Carbon Steel	Reactor Coolant (Internal)	Cumulative Fatigue Damage/Fatigue	TLAA	IV.A1-7	3.1.1-2	A, 1
Nozzle Safe Ends and Welds (Main Steam)	Pressure Boundary	Carbon Steel	Reactor Coolant (Internal)	Loss of Material/General, Pitting and Crevice Corrosion	One-Time Inspection	IV.A1-11	3.1.1-11	C
Nozzle Safe Ends and Welds (Main Steam)	Pressure Boundary	Carbon Steel	Reactor Coolant (Internal)	Loss of Material/General, Pitting and Crevice Corrosion	Water Chemistry	IV.A1-11	3.1.1-11	D
Nozzle Safe Ends and Welds (Recirculation Inlet and Outlet)	Pressure Boundary	Stainless Steel	Air - Indoor (External)	None	None	IV.E-2	3.1.1-86	A
Nozzle Safe Ends and Welds (Recirculation Inlet and Outlet)	Pressure Boundary	Stainless Steel	Reactor Coolant (Internal)	Cracking/Stress Corrosion Cracking	BWR Stress Corrosion Cracking	IV.A1-1	3.1.1-41	A
Nozzle Safe Ends and Welds (Recirculation Inlet and Outlet)	Pressure Boundary	Stainless Steel	Reactor Coolant (Internal)	Cracking/Stress Corrosion Cracking	Water Chemistry	IV.A1-1	3.1.1-41	B
Nozzle Safe Ends and Welds (Recirculation Inlet and Outlet)	Pressure Boundary	Stainless Steel	Reactor Coolant (Internal)	Cumulative Fatigue Damage/Fatigue	TLAA	IV.A1-7	3.1.1-2	A, 1
Nozzle Safe Ends and Welds (Recirculation Inlet and Outlet)	Pressure Boundary	Stainless Steel	Reactor Coolant (Internal)	Loss of Material/Pitting and Crevice Corrosion	One-Time Inspection	IV.A1-8	3.1.1-14	A
Nozzle Safe Ends and Welds (Recirculation Inlet and Outlet)	Pressure Boundary	Stainless Steel	Reactor Coolant (Internal)	Loss of Material/Pitting and Crevice Corrosion	Water Chemistry	IV.A1-8	3.1.1-14	B

Table 3.1.2-3 Reactor Pressure Vessel (Continued)

Component Type	Intended Function	Material	Environment	Aging Effect Requiring Management	Aging Management Programs	NUREG-1801 Vol. 2 Item	Table 1 Item	Notes
Nozzle Safe Ends and Welds (Seal Leak Detection, Spare, & Head Vent)	Pressure Boundary	Carbon Steel	Air - Indoor (External)	Loss of Material/General Corrosion	External Surfaces Monitoring	VII.D-3	3.3.1-57	A
Nozzle Safe Ends and Welds (Seal Leak Detection, Spare, & Head Vent)	Pressure Boundary	Carbon Steel	Reactor Coolant (Internal)	Cumulative Fatigue Damage/Fatigue	TLAA	IV.A1-7	3.1.1-2	A, 1
Nozzle Safe Ends and Welds (Seal Leak Detection, Spare, & Head Vent)	Pressure Boundary	Carbon Steel	Reactor Coolant (Internal)	Loss of Material/General, Pitting and Crevice Corrosion	One-Time Inspection	IV.A1-11	3.1.1-11	C
Nozzle Safe Ends and Welds (Seal Leak Detection, Spare, & Head Vent)	Pressure Boundary	Carbon Steel	Reactor Coolant (Internal)	Loss of Material/General, Pitting and Crevice Corrosion	Water Chemistry	IV.A1-11	3.1.1-11	D
Nozzle Safe Ends and Welds (Standby Liquid Control / Core DP)	Pressure Boundary	Stainless Steel	Air - Indoor (External)	None	None	IV.E-2	3.1.1-86	A
Nozzle Safe Ends and Welds (Standby Liquid Control / Core DP)	Pressure Boundary	Stainless Steel	Reactor Coolant (Internal)	Cracking/Stress Corrosion Cracking	BWR Stress Corrosion Cracking	IV.A1-1	3.1.1-41	A
Nozzle Safe Ends and Welds (Standby Liquid Control / Core DP)	Pressure Boundary	Stainless Steel	Reactor Coolant (Internal)	Cracking/Stress Corrosion Cracking	Water Chemistry	IV.A1-1	3.1.1-41	B
Nozzle Safe Ends and Welds (Standby Liquid Control / Core DP)	Pressure Boundary	Stainless Steel	Reactor Coolant (Internal)	Cumulative Fatigue Damage/Fatigue	TLAA	IV.A1-7	3.1.1-2	A, 1

Table 3.1.2-3 Reactor Pressure Vessel (Continued)

Component Type	Intended Function	Material	Environment	Aging Effect Requiring Management	Aging Management Programs	NUREG-1801 Vol. 2 Item	Table 1 Item	Notes
Nozzle Safe Ends and Welds (Standby Liquid Control / Core DP)	Pressure Boundary	Stainless Steel	Reactor Coolant (Internal)	Loss of Material/Pitting and Crevice Corrosion	One-Time Inspection	IV.A1-8	3.1.1-14	A
Nozzle Safe Ends and Welds (Standby Liquid Control / Core DP)	Pressure Boundary	Stainless Steel	Reactor Coolant (Internal)	Loss of Material/Pitting and Crevice Corrosion	Water Chemistry	IV.A1-8	3.1.1-14	B
Nozzle Thermal Sleeves (Core Spray)	Direct Flow	Stainless Steel	Reactor Coolant (Internal)	Cracking/Stress Corrosion Cracking	BWR Vessel Internals	IV.B1-7	3.1.1-44	A
Nozzle Thermal Sleeves (Core Spray)	Direct Flow	Stainless Steel	Reactor Coolant (Internal)	Cracking/Stress Corrosion Cracking	Water Chemistry	IV.B1-7	3.1.1-44	B
Nozzle Thermal Sleeves (Core Spray)	Direct Flow	Stainless Steel	Reactor Coolant (Internal)	Cumulative Fatigue Damage/Fatigue	TLAA	IV.A1-7	3.1.1-2	A, 1
Nozzle Thermal Sleeves (Core Spray)	Direct Flow	Stainless Steel	Reactor Coolant (Internal)	Loss of Material/Pitting and Crevice Corrosion	One-Time Inspection	IV.A1-8	3.1.1-14	C
Nozzle Thermal Sleeves (Core Spray)	Direct Flow	Stainless Steel	Reactor Coolant (Internal)	Loss of Material/Pitting and Crevice Corrosion	Water Chemistry	IV.A1-8	3.1.1-14	D
Nozzle Thermal Sleeves (Feedwater)	Direct Flow	Stainless Steel	Reactor Coolant (Internal)	Cracking/Stress Corrosion Cracking	BWR Vessel Internals	IV.B1-7	3.1.1-44	C
Nozzle Thermal Sleeves (Feedwater)	Direct Flow	Stainless Steel	Reactor Coolant (Internal)	Cracking/Stress Corrosion Cracking	Water Chemistry	IV.B1-7	3.1.1-44	D
Nozzle Thermal Sleeves (Feedwater)	Direct Flow	Stainless Steel	Reactor Coolant (Internal)	Loss of Material/Pitting and Crevice Corrosion	One-Time Inspection	IV.A1-8	3.1.1-14	C
Nozzle Thermal Sleeves (Feedwater)	Direct Flow	Stainless Steel	Reactor Coolant (Internal)	Loss of Material/Pitting and Crevice Corrosion	Water Chemistry	IV.A1-8	3.1.1-14	D

Table 3.1.2-3 Reactor Pressure Vessel (Continued)

Component Type	Intended Function	Material	Environment	Aging Effect Requiring Management	Aging Management Programs	NUREG-1801 Vol. 2 Item	Table 1 Item	Notes
Nozzle Thermal Sleeves (Low Pressure Coolant Injection)	Direct Flow	Stainless Steel	Reactor Coolant and Neutron Flux (Internal)	Cracking/Stress Corrosion Cracking	BWR Vessel Internals	IV.B1-7	3.1.1-44	C
Nozzle Thermal Sleeves (Low Pressure Coolant Injection)	Direct Flow	Stainless Steel	Reactor Coolant and Neutron Flux (Internal)	Cracking/Stress Corrosion Cracking	Water Chemistry	IV.B1-7	3.1.1-44	D
Nozzle Thermal Sleeves (Low Pressure Coolant Injection)	Direct Flow	Stainless Steel	Reactor Coolant and Neutron Flux (Internal)	Cumulative Fatigue Damage/Fatigue	TLAA	IV.A1-7	3.1.1-2	A, 1
Nozzle Thermal Sleeves (Low Pressure Coolant Injection)	Direct Flow	Stainless Steel	Reactor Coolant and Neutron Flux (Internal)	Loss of Material/Pitting and Crevice Corrosion	One-Time Inspection	IV.A1-8	3.1.1-14	C
Nozzle Thermal Sleeves (Low Pressure Coolant Injection)	Direct Flow	Stainless Steel	Reactor Coolant and Neutron Flux (Internal)	Loss of Material/Pitting and Crevice Corrosion	Water Chemistry	IV.A1-8	3.1.1-14	D
Nozzle Thermal Sleeves (Recirculation Inlets)	Direct Flow	Stainless Steel	Reactor Coolant (Internal)	Cracking/Stress Corrosion Cracking	BWR Vessel Internals	IV.B1-7	3.1.1-44	C
Nozzle Thermal Sleeves (Recirculation Inlets)	Direct Flow	Stainless Steel	Reactor Coolant (Internal)	Cracking/Stress Corrosion Cracking	Water Chemistry	IV.B1-7	3.1.1-44	D
Nozzle Thermal Sleeves (Recirculation Inlets)	Direct Flow	Stainless Steel	Reactor Coolant (Internal)	Cumulative Fatigue Damage/Fatigue	TLAA	IV.A1-7	3.1.1-2	A, 1
Nozzle Thermal Sleeves (Recirculation Inlets)	Direct Flow	Stainless Steel	Reactor Coolant (Internal)	Loss of Material/Pitting and Crevice Corrosion	One-Time Inspection	IV.A1-8	3.1.1-14	C

Table 3.1.2-3 Reactor Pressure Vessel (Continued)

Component Type	Intended Function	Material	Environment	Aging Effect Requiring Management	Aging Management Programs	NUREG-1801 Vol. 2 Item	Table 1 Item	Notes
Nozzle Thermal Sleeves (Recirculation Inlets)	Direct Flow	Stainless Steel	Reactor Coolant (Internal)	Loss of Material/Pitting and Crevice Corrosion	Water Chemistry	IV.A1-8	3.1.1-14	D
Penetration (CRD Stub Tubes)	Pressure Boundary	Nickel Alloy	Reactor Coolant (Internal)	Cracking/Stress Corrosion Cracking	ASME Section XI Inservice Inspection, Subsections IWB, IWC, and IWD	IV.A1-1	3.1.1-41	E, 2
Penetration (CRD Stub Tubes)	Pressure Boundary	Nickel Alloy	Reactor Coolant (Internal)	Cracking/Stress Corrosion Cracking	Water Chemistry	IV.A1-1	3.1.1-41	E, 2
Penetration (CRD Stub Tubes)	Pressure Boundary	Nickel Alloy	Reactor Coolant (Internal)	Cumulative Fatigue Damage/Fatigue	TLAA	IV.A1-7	3.1.1-2	A, 1
Penetration (CRD Stub Tubes)	Pressure Boundary	Nickel Alloy	Reactor Coolant (Internal)	Loss of Material/Pitting and Crevice Corrosion	One-Time Inspection	IV.A1-8	3.1.1-14	A
Penetration (CRD Stub Tubes)	Pressure Boundary	Nickel Alloy	Reactor Coolant (Internal)	Loss of Material/Pitting and Crevice Corrosion	Water Chemistry	IV.A1-8	3.1.1-14	B
Penetration (CRD Stub Tubes)	Structural Support	Nickel Alloy	Reactor Coolant (Internal)	Cracking/Stress Corrosion Cracking	ASME Section XI Inservice Inspection, Subsections IWB, IWC, and IWD	IV.A1-1	3.1.1-41	E, 2
Penetration (CRD Stub Tubes)	Structural Support	Nickel Alloy	Reactor Coolant (Internal)	Cracking/Stress Corrosion Cracking	Water Chemistry	IV.A1-1	3.1.1-41	E, 2
Penetration (CRD Stub Tubes)	Structural Support	Nickel Alloy	Reactor Coolant (Internal)	Cumulative Fatigue Damage/Fatigue	TLAA	IV.A1-7	3.1.1-2	A, 1
Penetration (CRD Stub Tubes)	Structural Support	Nickel Alloy	Reactor Coolant (Internal)	Loss of Material/Pitting and Crevice Corrosion	One-Time Inspection	IV.A1-8	3.1.1-14	A
Penetration (CRD Stub Tubes)	Structural Support	Nickel Alloy	Reactor Coolant (Internal)	Loss of Material/Pitting and Crevice Corrosion	Water Chemistry	IV.A1-8	3.1.1-14	B
Penetration (Incore Housings)	Pressure Boundary	Stainless Steel	Air - Indoor (External)	None	None	IV.E-2	3.1.1-86	A
Penetration (Incore Housings)	Pressure Boundary	Stainless Steel	Reactor Coolant (Internal)	Cracking/Stress Corrosion Cracking	ASME Section XI Inservice Inspection, Subsections IWB, IWC, and IWD	IV.A1-1	3.1.1-41	E, 2

Table 3.1.2-3 Reactor Pressure Vessel (Continued)

Component Type	Intended Function	Material	Environment	Aging Effect Requiring Management	Aging Management Programs	NUREG-1801 Vol. 2 Item	Table 1 Item	Notes
Penetration (Incore Housings)	Pressure Boundary	Stainless Steel	Reactor Coolant (Internal)	Cracking/Stress Corrosion Cracking	Water Chemistry	IV.A1-1	3.1.1-41	E, 2
Penetration (Incore Housings)	Pressure Boundary	Stainless Steel	Reactor Coolant (Internal)	Cumulative Fatigue Damage/Fatigue	TLAA	IV.A1-7	3.1.1-2	A, 1
Penetration (Incore Housings)	Pressure Boundary	Stainless Steel	Reactor Coolant (Internal)	Loss of Material/Pitting and Crevice Corrosion	One-Time Inspection	IV.A1-8	3.1.1-14	A
Penetration (Incore Housings)	Pressure Boundary	Stainless Steel	Reactor Coolant (Internal)	Loss of Material/Pitting and Crevice Corrosion	Water Chemistry	IV.A1-8	3.1.1-14	B
Reactor Coolant Pressure Boundary Components	Pressure Boundary	Carbon Steel	Air - Indoor (External)	Loss of Material/General Corrosion	External Surfaces Monitoring	VII.D-3	3.3.1-57	A
Reactor Coolant Pressure Boundary Components	Pressure Boundary	Carbon Steel	Reactor Coolant (Internal)	Cumulative Fatigue Damage/Fatigue	TLAA	IV.A1-7	3.1.1-2	A, 1
Reactor Coolant Pressure Boundary Components	Pressure Boundary	Carbon Steel	Reactor Coolant (Internal)	Loss of Material/General, Pitting and Crevice Corrosion	One-Time Inspection	IV.A1-11	3.1.1-11	C
Reactor Coolant Pressure Boundary Components	Pressure Boundary	Carbon Steel	Reactor Coolant (Internal)	Loss of Material/General, Pitting and Crevice Corrosion	Water Chemistry	IV.A1-11	3.1.1-11	D
Reactor Coolant Pressure Boundary Components	Pressure Boundary	Low Alloy Steel	Air - Indoor (External)	Loss of Material/General Corrosion	External Surfaces Monitoring	VII.D-3	3.3.1-57	A
Reactor Coolant Pressure Boundary Components	Pressure Boundary	Low Alloy Steel	Reactor Coolant (Internal)	Cumulative Fatigue Damage/Fatigue	TLAA	IV.A1-7	3.1.1-2	A, 1
Reactor Coolant Pressure Boundary Components	Pressure Boundary	Low Alloy Steel	Reactor Coolant (Internal)	Loss of Material/General, Pitting and Crevice Corrosion	One-Time Inspection	IV.A1-11	3.1.1-11	C
Reactor Coolant Pressure Boundary Components	Pressure Boundary	Low Alloy Steel	Reactor Coolant (Internal)	Loss of Material/General, Pitting and Crevice Corrosion	Water Chemistry	IV.A1-11	3.1.1-11	D

Table 3.1.2-3 Reactor Pressure Vessel (Continued)

Component Type	Intended Function	Material	Environment	Aging Effect Requiring Management	Aging Management Programs	NUREG-1801 Vol. 2 Item	Table 1 Item	Notes
Reactor Coolant Pressure Boundary Components	Pressure Boundary	Nickel Alloy	Air - Indoor (External)	None	None	IV.E-1	3.1.1-85	A
Reactor Coolant Pressure Boundary Components	Pressure Boundary	Nickel Alloy	Reactor Coolant (Internal)	Cracking/Stress Corrosion Cracking	BWR Stress Corrosion Cracking	IV.A1-1	3.1.1-41	C
Reactor Coolant Pressure Boundary Components	Pressure Boundary	Nickel Alloy	Reactor Coolant (Internal)	Cracking/Stress Corrosion Cracking	Water Chemistry	IV.A1-1	3.1.1-41	D
Reactor Coolant Pressure Boundary Components	Pressure Boundary	Nickel Alloy	Reactor Coolant (Internal)	Cumulative Fatigue Damage/Fatigue	TLAA	IV.A1-7	3.1.1-2	A, 1
Reactor Coolant Pressure Boundary Components	Pressure Boundary	Nickel Alloy	Reactor Coolant (Internal)	Loss of Material/Pitting and Crevice Corrosion	One-Time Inspection	IV.A1-8	3.1.1-14	C
Reactor Coolant Pressure Boundary Components	Pressure Boundary	Nickel Alloy	Reactor Coolant (Internal)	Loss of Material/Pitting and Crevice Corrosion	Water Chemistry	IV.A1-8	3.1.1-14	D
Reactor Vessel (Bottom Head)	Pressure Boundary	Carbon or Low Alloy Steel with Stainless Steel Cladding	Air - Indoor (External)	Loss of Material/General Corrosion	External Surfaces Monitoring	VII.D-3	3.3.1-57	A
Reactor Vessel (Bottom Head)	Pressure Boundary	Carbon or Low Alloy Steel with Stainless Steel Cladding	Reactor Coolant (Internal)	Cracking/Stress Corrosion Cracking	ASME Section XI Inservice Inspection, Subsections IWB, IWC, and IWD	IV.A1-1	3.1.1-41	E, 2
Reactor Vessel (Bottom Head)	Pressure Boundary	Carbon or Low Alloy Steel with Stainless Steel Cladding	Reactor Coolant (Internal)	Cracking/Stress Corrosion Cracking	Water Chemistry	IV.A1-1	3.1.1-41	E, 2
Reactor Vessel (Bottom Head)	Pressure Boundary	Carbon or Low Alloy Steel with Stainless Steel Cladding	Reactor Coolant (Internal)	Cumulative Fatigue Damage/Fatigue	TLAA	IV.A1-7	3.1.1-2	A, 1

Table 3.1.2-3 Reactor Pressure Vessel (Continued)

Component Type	Intended Function	Material	Environment	Aging Effect Requiring Management	Aging Management Programs	NUREG-1801 Vol. 2 Item	Table 1 Item	Notes
Reactor Vessel (Bottom Head)	Pressure Boundary	Carbon or Low Alloy Steel with Stainless Steel Cladding	Reactor Coolant (Internal)	Loss of Material/Pitting and Crevice Corrosion	One-Time Inspection	IV.A1-8	3.1.1-14	A
Reactor Vessel (Bottom Head)	Pressure Boundary	Carbon or Low Alloy Steel with Stainless Steel Cladding	Reactor Coolant (Internal)	Loss of Material/Pitting and Crevice Corrosion	Water Chemistry	IV.A1-8	3.1.1-14	B
Reactor Vessel (External Attachments)	Structural Support	Low Alloy Steel	Air - Indoor (External)	Cumulative Fatigue Damage/Fatigue	TLAA	IV.A1-6	3.1.1-1	A, 1
Reactor Vessel (External Attachments)	Structural Support	Low Alloy Steel	Air - Indoor (External)	Loss of Material/General Corrosion	External Surfaces Monitoring	VII.D-3	3.3.1-57	A
Reactor Vessel (Intermediate, Lower Intermediate and Lower Shell Sections)	Pressure Boundary	Carbon or Low Alloy Steel with Stainless Steel Cladding	Air - Indoor (External)	Loss of Material/General Corrosion	External Surfaces Monitoring	VII.D-3	3.3.1-57	A
Reactor Vessel (Intermediate, Lower Intermediate and Lower Shell Sections)	Pressure Boundary	Carbon or Low Alloy Steel with Stainless Steel Cladding	Reactor Coolant and Neutron Flux (Internal)	Cracking/Stress Corrosion Cracking	ASME Section XI Inservice Inspection, Subsections IWB, IWC, and IWD	IV.A1-1	3.1.1-41	E, 2
Reactor Vessel (Intermediate, Lower Intermediate and Lower Shell Sections)	Pressure Boundary	Carbon or Low Alloy Steel with Stainless Steel Cladding	Reactor Coolant and Neutron Flux (Internal)	Cracking/Stress Corrosion Cracking	Water Chemistry	IV.A1-1	3.1.1-41	E, 2
Reactor Vessel (Intermediate, Lower Intermediate and Lower Shell Sections)	Pressure Boundary	Carbon or Low Alloy Steel with Stainless Steel Cladding	Reactor Coolant and Neutron Flux (Internal)	Cumulative Fatigue Damage/Fatigue	TLAA	IV.A1-7	3.1.1-2	A, 1

Table 3.1.2-3 Reactor Pressure Vessel (Continued)

Component Type	Intended Function	Material	Environment	Aging Effect Requiring Management	Aging Management Programs	NUREG-1801 Vol. 2 Item	Table 1 Item	Notes
Reactor Vessel (Intermediate, Lower Intermediate and Lower Shell Sections)	Pressure Boundary	Carbon or Low Alloy Steel with Stainless Steel Cladding	Reactor Coolant and Neutron Flux (Internal)	Loss of Fracture Toughness/Neutron Irradiation Embrittlement	Reactor Vessel Surveillance	IV.A1-14	3.1.1-18	A
Reactor Vessel (Intermediate, Lower Intermediate and Lower Shell Sections)	Pressure Boundary	Carbon or Low Alloy Steel with Stainless Steel Cladding	Reactor Coolant and Neutron Flux (Internal)	Loss of Fracture Toughness/Neutron Irradiation Embrittlement	TLAA	IV.A1-13	3.1.1-17	A, 1
Reactor Vessel (Intermediate, Lower Intermediate and Lower Shell Sections)	Pressure Boundary	Carbon or Low Alloy Steel with Stainless Steel Cladding	Reactor Coolant and Neutron Flux (Internal)	Loss of Material/Pitting and Crevice Corrosion	One-Time Inspection	IV.A1-8	3.1.1-14	A
Reactor Vessel (Intermediate, Lower Intermediate and Lower Shell Sections)	Pressure Boundary	Carbon or Low Alloy Steel with Stainless Steel Cladding	Reactor Coolant and Neutron Flux (Internal)	Loss of Material/Pitting and Crevice Corrosion	Water Chemistry	IV.A1-8	3.1.1-14	B
Reactor Vessel (Internal Attachments)	Structural Support	Carbon Steel	Reactor Coolant (Internal)	Cumulative Fatigue Damage/Fatigue	TLAA	IV.A1-7	3.1.1-2	A, 1
Reactor Vessel (Internal Attachments)	Structural Support	Carbon Steel	Reactor Coolant (Internal)	Loss of Material/General, Pitting and Crevice Corrosion	One-Time Inspection	IV.A1-11	3.1.1-11	A
Reactor Vessel (Internal Attachments)	Structural Support	Carbon Steel	Reactor Coolant (Internal)	Loss of Material/General, Pitting and Crevice Corrosion	Water Chemistry	IV.A1-11	3.1.1-11	B
Reactor Vessel (Internal Attachments)	Structural Support	Nickel Alloy	Reactor Coolant (Internal)	Cracking/Stress Corrosion Cracking	BWR Vessel ID Attachment Welds	IV.A1-12	3.1.1-42	A
Reactor Vessel (Internal Attachments)	Structural Support	Nickel Alloy	Reactor Coolant (Internal)	Cracking/Stress Corrosion Cracking	Water Chemistry	IV.A1-12	3.1.1-42	B

Table 3.1.2-3 Reactor Pressure Vessel (Continued)

Component Type	Intended Function	Material	Environment	Aging Effect Requiring Management	Aging Management Programs	NUREG-1801 Vol. 2 Item	Table 1 Item	Notes
Reactor Vessel (Internal Attachments)	Structural Support	Nickel Alloy	Reactor Coolant (Internal)	Cumulative Fatigue Damage/Fatigue	TLAA	IV.A1-7	3.1.1-2	A, 1
Reactor Vessel (Internal Attachments)	Structural Support	Nickel Alloy	Reactor Coolant (Internal)	Loss of Material/Pitting and Crevice Corrosion	One-Time Inspection	IV.A1-8	3.1.1-14	A
Reactor Vessel (Internal Attachments)	Structural Support	Nickel Alloy	Reactor Coolant (Internal)	Loss of Material/Pitting and Crevice Corrosion	Water Chemistry	IV.A1-8	3.1.1-14	B
Reactor Vessel (Internal Attachments)	Structural Support	Stainless Steel	Reactor Coolant (Internal)	Cracking/Stress Corrosion Cracking	BWR Vessel ID Attachment Welds	IV.A1-12	3.1.1-42	A
Reactor Vessel (Internal Attachments)	Structural Support	Stainless Steel	Reactor Coolant (Internal)	Cracking/Stress Corrosion Cracking	Water Chemistry	IV.A1-12	3.1.1-42	B
Reactor Vessel (Internal Attachments)	Structural Support	Stainless Steel	Reactor Coolant (Internal)	Cumulative Fatigue Damage/Fatigue	TLAA	IV.A1-7	3.1.1-2	A, 1
Reactor Vessel (Internal Attachments)	Structural Support	Stainless Steel	Reactor Coolant (Internal)	Loss of Material/Pitting and Crevice Corrosion	One-Time Inspection	IV.A1-8	3.1.1-14	A
Reactor Vessel (Internal Attachments)	Structural Support	Stainless Steel	Reactor Coolant (Internal)	Loss of Material/Pitting and Crevice Corrosion	Water Chemistry	IV.A1-8	3.1.1-14	B
Reactor Vessel (Shell Flange, Upper and Upper Intermediate Shell Sections)	Pressure Boundary	Carbon or Low Alloy Steel with Stainless Steel Cladding	Air - Indoor (External)	Loss of Material/General Corrosion	External Surfaces Monitoring	VII.D-3	3.3.1-57	A
Reactor Vessel (Shell Flange, Upper and Upper Intermediate Shell Sections)	Pressure Boundary	Carbon or Low Alloy Steel with Stainless Steel Cladding	Reactor Coolant (Internal)	Cracking/Stress Corrosion Cracking	ASME Section XI Inservice Inspection, Subsections IWB, IWC, and IWD	IV.A1-1	3.1.1-41	E, 2

Table 3.1.2-3 Reactor Pressure Vessel (Continued)

Component Type	Intended Function	Material	Environment	Aging Effect Requiring Management	Aging Management Programs	NUREG-1801 Vol. 2 Item	Table 1 Item	Notes
Reactor Vessel (Shell Flange, Upper and Upper Intermediate Shell Sections)	Pressure Boundary	Carbon or Low Alloy Steel with Stainless Steel Cladding	Reactor Coolant (Internal)	Cracking/Stress Corrosion Cracking	Water Chemistry	IV.A1-1	3.1.1-41	E, 2
Reactor Vessel (Shell Flange, Upper and Upper Intermediate Shell Sections)	Pressure Boundary	Carbon or Low Alloy Steel with Stainless Steel Cladding	Reactor Coolant (Internal)	Cumulative Fatigue Damage/Fatigue	TLAA	IV.A1-7	3.1.1-2	A, 1
Reactor Vessel (Shell Flange, Upper and Upper Intermediate Shell Sections)	Pressure Boundary	Carbon or Low Alloy Steel with Stainless Steel Cladding	Reactor Coolant (Internal)	Loss of Material/Pitting and Crevice Corrosion	One-Time Inspection	IV.A1-8	3.1.1-14	A
Reactor Vessel (Shell Flange, Upper and Upper Intermediate Shell Sections)	Pressure Boundary	Carbon or Low Alloy Steel with Stainless Steel Cladding	Reactor Coolant (Internal)	Loss of Material/Pitting and Crevice Corrosion	Water Chemistry	IV.A1-8	3.1.1-14	B
Reactor Vessel (Top Head and Flange)	Pressure Boundary	Low Alloy Steel	Air - Indoor (External)	Loss of Material/General Corrosion	External Surfaces Monitoring	VII.D-3	3.3.1-57	A
Reactor Vessel (Top Head and Flange)	Pressure Boundary	Low Alloy Steel	Reactor Coolant (Internal)	Cumulative Fatigue Damage/Fatigue	TLAA	IV.A1-7	3.1.1-2	A, 1
Reactor Vessel (Top Head and Flange)	Pressure Boundary	Low Alloy Steel	Reactor Coolant (Internal)	Loss of Material/General, Pitting and Crevice Corrosion	One-Time Inspection	IV.A1-11	3.1.1-11	A
Reactor Vessel (Top Head and Flange)	Pressure Boundary	Low Alloy Steel	Reactor Coolant (Internal)	Loss of Material/General, Pitting and Crevice Corrosion	Water Chemistry	IV.A1-11	3.1.1-11	B

Notes	Definition of Note
A	Consistent with NUREG-1801 item for component, material, environment, and aging effect. AMP is consistent with NUREG-1801 AMP.
B	Consistent with NUREG-1801 item for component, material, environment, and aging effect. AMP takes some exceptions to NUREG-1801 AMP.
C	Component is different, but consistent with NUREG-1801 item for material, environment, and aging effect. AMP is consistent with NUREG-1801 AMP.
D	Component is different, but consistent with NUREG-1801 item for material, environment, and aging effect. AMP takes some exceptions to NUREG-1801 AMP.
E	Consistent with NUREG-1801 item for material, environment and aging effect, but a different aging management program is credited or NUREG-1801 identifies a plant-specific aging management program.
F	Material not in NUREG-1801 for this component.
G	Environment not in NUREG-1801 for this component and material.
H	Aging effect not in NUREG-1801 for this component, material and environment combination.
I	Aging effect in NUREG-1801 for this component, material and environment combination is not applicable.
J	Neither the component nor the material and environment combination is evaluated in NUREG-1801.

Plant Specific Notes:

1. The TLAA designation in the Aging Management Program column indicates for neutron embrittlement the component is evaluated in section 4.2 and for fatigue the component is evaluated in Section 4.3.

2. The ASME Section XI Inservice Inspection, Subsections IWB, IWC, and IWD and Water Chemistry program are substituted to manage the aging effect(s) applicable to this component type, material, and environment combination.

3. Reactor Head Closure Studs program is used to manage the aging effect(s) applicable to this component type, material, and environment combination.

Table 3.1.2-4
Reactor Recirculation System
Summary of Aging Management Evaluation

Table 3.1.2-4 Reactor Recirculation System

Component Type	Intended Function	Material	Environment	Aging Effect Requiring Management	Aging Management Programs	NUREG-1801 Vol. 2 Item	Table 1 Item	Notes
Bolting	Mechanical Closure	Carbon and Low Alloy Steel Bolting	Air - Indoor (External)	Loss of Material/General, Pitting and Crevice Corrosion	Bolting Integrity	V.E-4	3.2.1-23	B
Bolting	Mechanical Closure	Carbon and Low Alloy Steel Bolting	Air - Indoor (External)	Loss of Preload/Thermal Effects, Gasket Creep, and Self-Loosening	Bolting Integrity	IV.C1-10	3.1.1-52	B
Bolting (Class 1)	Mechanical Closure	Carbon and Low Alloy Steel Bolting	Air - Indoor (External)	Cumulative Fatigue Damage/Fatigue	TLAA	IV.C1-11	3.1.1-4	A, 1
Bolting (Class 1)	Mechanical Closure	Carbon and Low Alloy Steel Bolting	Air - Indoor (External)	Loss of Material/General, Pitting and Crevice Corrosion	Bolting Integrity	V.E-4	3.2.1-23	B
Bolting (Class 1)	Mechanical Closure	Carbon and Low Alloy Steel Bolting	Air - Indoor (External)	Loss of Preload/Thermal Effects, Gasket Creep, and Self-Loosening	Bolting Integrity	IV.C1-10	3.1.1-52	B
Class 1 Piping, Fittings and Branch Connections < NPS 4"	Pressure Boundary	Stainless Steel	Air - Indoor (External)	None	None	IV.E-2	3.1.1-86	A
Class 1 Piping, Fittings and Branch Connections < NPS 4"	Pressure Boundary	Stainless Steel	Treated Water (Internal) > 140 F	Cracking/Stress Corrosion Cracking, Thermal and Mechanical Loading	ASME Section XI Inservice Inspection, Subsections IWB, IWC, and IWD	IV.C1-1	3.1.1-48	A
Class 1 Piping, Fittings and Branch Connections < NPS 4"	Pressure Boundary	Stainless Steel	Treated Water (Internal) > 140 F	Cracking/Stress Corrosion Cracking, Thermal and Mechanical Loading	Small-Bore Class 1 Piping Inspection	IV.C1-1	3.1.1-48	E, 2

Table 3.1.2-4 Reactor Recirculation System (Continued)

Component Type	Intended Function	Material	Environment	Aging Effect Requiring Management	Aging Management Programs	NUREG-1801 Vol. 2 Item	Table 1 Item	Notes
Class 1 Piping, Fittings and Branch Connections < NPS 4"	Pressure Boundary	Stainless Steel	Treated Water (Internal) > 140 F	Cracking/Stress Corrosion Cracking, Thermal and Mechanical Loading	Water Chemistry	IV.C1-1	3.1.1-48	B
Class 1 Piping, Fittings and Branch Connections < NPS 4"	Pressure Boundary	Stainless Steel	Treated Water (Internal) > 140 F	Cumulative Fatigue Damage/Fatigue	TLAA	IV.C1-15	3.1.1-3	A, 1
Class 1 Piping, Fittings and Branch Connections < NPS 4"	Pressure Boundary	Stainless Steel	Treated Water (Internal) > 140 F	Loss of Material/Pitting and Crevice Corrosion	One-Time Inspection	IV.C1-14	3.1.1-15	A
Class 1 Piping, Fittings and Branch Connections < NPS 4"	Pressure Boundary	Stainless Steel	Treated Water (Internal) > 140 F	Loss of Material/Pitting and Crevice Corrosion	Water Chemistry	IV.C1-14	3.1.1-15	B
Flow Device	Leakage Boundary	Glass	Air - Indoor (External)	None	None	V.F-6	3.2.1-52	A
Flow Device	Leakage Boundary	Glass	Treated Water (Internal)	None	None	V.F-10	3.2.1-52	A
Flow Device	Leakage Boundary	Stainless Steel	Air - Indoor (External)	None	None	IV.E-2	3.1.1-86	A
Flow Device	Leakage Boundary	Stainless Steel	Treated Water (Internal) > 140 F	Cracking/Stress Corrosion Cracking	ASME Section XI Inservice Inspection, Subsections IWB, IWC, and IWD	IV.C1-1	3.1.1-48	E, 3
Flow Device	Leakage Boundary	Stainless Steel	Treated Water (Internal) > 140 F	Cracking/Stress Corrosion Cracking	Water Chemistry	IV.C1-1	3.1.1-48	E, 3
Flow Device	Leakage Boundary	Stainless Steel	Treated Water (Internal) > 140 F	Loss of Material/Pitting and Crevice Corrosion	One-Time Inspection	IV.C1-14	3.1.1-15	A
Flow Device	Leakage Boundary	Stainless Steel	Treated Water (Internal) > 140 F	Loss of Material/Pitting and Crevice Corrosion	Water Chemistry	IV.C1-14	3.1.1-15	B
Heat Exchanger Components (Motor Air Cooler)	Evaluated with the Chilled Water System	Not Applicable	Not Applicable	Not Applicable	Not Applicable			
Piping and Fittings	Leakage Boundary	Carbon Steel	Air - Indoor (External)	Loss of Material/General Corrosion	External Surfaces Monitoring	VII.D-3	3.3.1-57	A

Table 3.1.2-4 Reactor Recirculation System (Continued)

Component Type	Intended Function	Material	Environment	Aging Effect Requiring Management	Aging Management Programs	NUREG-1801 Vol. 2 Item	Table 1 Item	Notes
Piping and Fittings	Leakage Boundary	Carbon Steel	Treated Water (Internal)	Loss of Material/Galvanic Corrosion	One-Time Inspection	VIII.E-7	3.4.1-5	C
Piping and Fittings	Leakage Boundary	Carbon Steel	Treated Water (Internal)	Loss of Material/Galvanic Corrosion	Water Chemistry	VIII.E-7	3.4.1-5	D
Piping and Fittings	Leakage Boundary	Carbon Steel	Treated Water (Internal)	Loss of Material/General, Pitting and Crevice Corrosion	One-Time Inspection	IV.C1-6	3.1.1-13	C
Piping and Fittings	Leakage Boundary	Carbon Steel	Treated Water (Internal)	Loss of Material/General, Pitting and Crevice Corrosion	Water Chemistry	IV.C1-6	3.1.1-13	D
Piping and Fittings	Leakage Boundary	Stainless Steel	Air - Indoor (External)	None	None	IV.E-2	3.1.1-86	A
Piping and Fittings	Leakage Boundary	Stainless Steel	Treated Water (Internal)	Loss of Material/Pitting and Crevice Corrosion	One-Time Inspection	IV.C1-14	3.1.1-15	A
Piping and Fittings	Leakage Boundary	Stainless Steel	Treated Water (Internal)	Loss of Material/Pitting and Crevice Corrosion	Water Chemistry	IV.C1-14	3.1.1-15	B
Piping and Fittings	Pressure Boundary	Carbon Steel	Air - Indoor (External)	Loss of Material/General Corrosion	External Surfaces Monitoring	VII.D-3	3.3.1-57	A
Piping and Fittings	Pressure Boundary	Carbon Steel	Treated Water (Internal)	Cumulative Fatigue Damage/Fatigue	TLAA	IV.C1-15	3.1.1-3	A, 1
Piping and Fittings	Pressure Boundary	Carbon Steel	Treated Water (Internal)	Loss of Material/General, Pitting and Crevice Corrosion	One-Time Inspection	IV.C1-6	3.1.1-13	C
Piping and Fittings	Pressure Boundary	Carbon Steel	Treated Water (Internal)	Loss of Material/General, Pitting and Crevice Corrosion	Water Chemistry	IV.C1-6	3.1.1-13	D
Piping and Fittings	Pressure Boundary	Stainless Steel	Air - Indoor (External)	None	None	IV.E-2	3.1.1-86	A
Piping and Fittings	Pressure Boundary	Stainless Steel	Treated Water (Internal)	Loss of Material/Pitting and Crevice Corrosion	One-Time Inspection	IV.C1-14	3.1.1-15	A
Piping and Fittings	Pressure Boundary	Stainless Steel	Treated Water (Internal)	Loss of Material/Pitting and Crevice Corrosion	Water Chemistry	IV.C1-14	3.1.1-15	B
Piping and Fittings (Class 1)	Pressure Boundary	Stainless Steel	Air - Indoor (External)	None	None	IV.E-2	3.1.1-86	A

Table 3.1.2-4 Reactor Recirculation System (Continued)

Component Type	Intended Function	Material	Environment	Aging Effect Requiring Management	Aging Management Programs	NUREG-1801 Vol. 2 Item	Table 1 Item	Notes
Piping and Fittings (Class 1)	Pressure Boundary	Stainless Steel	Treated Water (Internal) > 140 F	Cracking/Stress Corrosion Cracking	BWR Stress Corrosion Cracking	IV.C1-9	3.1.1-41	A
Piping and Fittings (Class 1)	Pressure Boundary	Stainless Steel	Treated Water (Internal) > 140 F	Cracking/Stress Corrosion Cracking	Water Chemistry	IV.C1-9	3.1.1-41	B
Piping and Fittings (Class 1)	Pressure Boundary	Stainless Steel	Treated Water (Internal) > 140 F	Cumulative Fatigue Damage/Fatigue	TLAA	IV.C1-15	3.1.1-3	A, 1
Piping and Fittings (Class 1)	Pressure Boundary	Stainless Steel	Treated Water (Internal) > 140 F	Loss of Material/Pitting and Crevice Corrosion	One-Time Inspection	IV.C1-14	3.1.1-15	A
Piping and Fittings (Class 1)	Pressure Boundary	Stainless Steel	Treated Water (Internal) > 140 F	Loss of Material/Pitting and Crevice Corrosion	Water Chemistry	IV.C1-14	3.1.1-15	B
Pump Casing (Class 1)	Pressure Boundary	Cast Austenitic Stainless Steel (CASS)	Air - Indoor (External)	None	None	IV.E-2	3.1.1-86	A
Pump Casing (Class 1)	Pressure Boundary	Cast Austenitic Stainless Steel (CASS)	Treated Water (Internal) > 482 F	Cracking/Stress Corrosion Cracking	BWR Stress Corrosion Cracking	IV.C1-9	3.1.1-41	A
Pump Casing (Class 1)	Pressure Boundary	Cast Austenitic Stainless Steel (CASS)	Treated Water (Internal) > 482 F	Cracking/Stress Corrosion Cracking	Water Chemistry	IV.C1-9	3.1.1-41	B
Pump Casing (Class 1)	Pressure Boundary	Cast Austenitic Stainless Steel (CASS)	Treated Water (Internal) > 482 F	Loss of Fracture Toughness/Thermal Aging Embrittlement	ASME Section XI Inservice Inspection, Subsections IWB, IWC, and IWD	IV.C1-3	3.1.1-55	A
Pump Casing (Class 1)	Pressure Boundary	Cast Austenitic Stainless Steel (CASS)	Treated Water (Internal) > 482 F	Loss of Material/Pitting and Crevice Corrosion	One-Time Inspection	IV.C1-14	3.1.1-15	A
Pump Casing (Class 1)	Pressure Boundary	Cast Austenitic Stainless Steel (CASS)	Treated Water (Internal) > 482 F	Loss of Material/Pitting and Crevice Corrosion	Water Chemistry	IV.C1-14	3.1.1-15	B
Restricting Orifices (Class 1)	Pressure Boundary	Stainless Steel	Air - Indoor (External)	None	None	IV.E-2	3.1.1-86	A

Table 3.1.2-4 Reactor Recirculation System (Continued)

Component Type	Intended Function	Material	Environment	Aging Effect Requiring Management	Aging Management Programs	NUREG-1801 Vol. 2 Item	Table 1 Item	Notes
Restricting Orifices (Class 1)	Pressure Boundary	Stainless Steel	Treated Water (Internal) > 140 F	Cracking/Stress Corrosion Cracking	ASME Section XI Inservice Inspection, Subsections IWB, IWC, and IWD	IV.C1-1	3.1.1-48	E, 3
Restricting Orifices (Class 1)	Pressure Boundary	Stainless Steel	Treated Water (Internal) > 140 F	Cracking/Stress Corrosion Cracking	Water Chemistry	IV.C1-1	3.1.1-48	E, 3
Restricting Orifices (Class 1)	Pressure Boundary	Stainless Steel	Treated Water (Internal) > 140 F	Loss of Material/Pitting and Crevice Corrosion	One-Time Inspection	IV.C1-14	3.1.1-15	A
Restricting Orifices (Class 1)	Pressure Boundary	Stainless Steel	Treated Water (Internal) > 140 F	Loss of Material/Pitting and Crevice Corrosion	Water Chemistry	IV.C1-14	3.1.1-15	B
Restricting Orifices (Class 1)	Throttle	Stainless Steel	Air - Indoor (External)	None	None	IV.E-2	3.1.1-86	A
Restricting Orifices (Class 1)	Throttle	Stainless Steel	Treated Water (Internal) > 140 F	Cracking/Stress Corrosion Cracking	ASME Section XI Inservice Inspection, Subsections IWB, IWC, and IWD	IV.C1-1	3.1.1-48	E, 3
Restricting Orifices (Class 1)	Throttle	Stainless Steel	Treated Water (Internal) > 140 F	Cracking/Stress Corrosion Cracking	Water Chemistry	IV.C1-1	3.1.1-48	E, 3
Restricting Orifices (Class 1)	Throttle	Stainless Steel	Treated Water (Internal) > 140 F	Loss of Material/Pitting and Crevice Corrosion	One-Time Inspection	IV.C1-14	3.1.1-15	A
Restricting Orifices (Class 1)	Throttle	Stainless Steel	Treated Water (Internal) > 140 F	Loss of Material/Pitting and Crevice Corrosion	Water Chemistry	IV.C1-14	3.1.1-15	B
Thermowell (Class 1)	Pressure Boundary	Stainless Steel	Air - Indoor (External)	None	None	IV.E-2	3.1.1-86	A
Thermowell (Class 1)	Pressure Boundary	Stainless Steel	Treated Water (Internal) > 140 F	Cracking/Stress Corrosion Cracking	ASME Section XI Inservice Inspection, Subsections IWB, IWC, and IWD	IV.C1-1	3.1.1-48	E, 3
Thermowell (Class 1)	Pressure Boundary	Stainless Steel	Treated Water (Internal) > 140 F	Cracking/Stress Corrosion Cracking	Water Chemistry	IV.C1-1	3.1.1-48	E, 3
Thermowell (Class 1)	Pressure Boundary	Stainless Steel	Treated Water (Internal) > 140 F	Loss of Material/Pitting and Crevice Corrosion	One-Time Inspection	IV.C1-14	3.1.1-15	A
Thermowell (Class 1)	Pressure Boundary	Stainless Steel	Treated Water (Internal) > 140 F	Loss of Material/Pitting and Crevice Corrosion	Water Chemistry	IV.C1-14	3.1.1-15	B

Table 3.1.2-4 Reactor Recirculation System (Continued)

Component Type	Intended Function	Material	Environment	Aging Effect Requiring Management	Aging Management Programs	NUREG-1801 Vol. 2 Item	Table 1 Item	Notes
Valve Body	Leakage Boundary	Carbon Steel	Air - Indoor (External)	Loss of Material/General Corrosion	External Surfaces Monitoring	VII.D-3	3.3.1-57	A
Valve Body	Leakage Boundary	Carbon Steel	Treated Water (Internal)	Loss of Material/General, Pitting and Crevice Corrosion	One-Time Inspection	IV.C1-6	3.1.1-13	C
Valve Body	Leakage Boundary	Carbon Steel	Treated Water (Internal)	Loss of Material/General, Pitting and Crevice Corrosion	Water Chemistry	IV.C1-6	3.1.1-13	D
Valve Body	Pressure Boundary	Carbon Steel	Air - Indoor (External)	Loss of Material/General Corrosion	External Surfaces Monitoring	VII.D-3	3.3.1-57	A
Valve Body	Pressure Boundary	Carbon Steel	Treated Water (Internal)	Loss of Material/General, Pitting and Crevice Corrosion	One-Time Inspection	IV.C1-6	3.1.1-13	C
Valve Body	Pressure Boundary	Carbon Steel	Treated Water (Internal)	Loss of Material/General, Pitting and Crevice Corrosion	Water Chemistry	IV.C1-6	3.1.1-13	D
Valve Body	Pressure Boundary	Stainless Steel	Air - Indoor (External)	None	None	IV.E-2	3.1.1-86	A
Valve Body	Pressure Boundary	Stainless Steel	Treated Water (Internal) > 140 F	Cracking/Stress Corrosion Cracking	ASME Section XI Inservice Inspection, Subsections IWB, IWC, and IWD	IV.C1-1	3.1.1-48	E, 3
Valve Body	Pressure Boundary	Stainless Steel	Treated Water (Internal) > 140 F	Cracking/Stress Corrosion Cracking	Water Chemistry	IV.C1-1	3.1.1-48	E, 3
Valve Body	Pressure Boundary	Stainless Steel	Treated Water (Internal) > 140 F	Loss of Material/Pitting and Crevice Corrosion	One-Time Inspection	IV.C1-14	3.1.1-15	A
Valve Body	Pressure Boundary	Stainless Steel	Treated Water (Internal) > 140 F	Loss of Material/Pitting and Crevice Corrosion	Water Chemistry	IV.C1-14	3.1.1-15	B
Valve Body (Class 1)	Pressure Boundary	Cast Austenitic Stainless Steel (CASS)	Air - Indoor (External)	None	None	IV.E-2	3.1.1-86	A
Valve Body (Class 1)	Pressure Boundary	Cast Austenitic Stainless Steel (CASS)	Treated Water (Internal) > 482 F	Cracking/Stress Corrosion Cracking	BWR Stress Corrosion Cracking	IV.C1-9	3.1.1-41	A

Table 3.1.2-4 Reactor Recirculation System (Continued)

Component Type	Intended Function	Material	Environment	Aging Effect Requiring Management	Aging Management Programs	NUREG-1801 Vol. 2 Item	Table 1 Item	Notes
Valve Body (Class 1)	Pressure Boundary	Cast Austenitic Stainless Steel (CASS)	Treated Water (Internal) > 482 F	Cracking/Stress Corrosion Cracking	Water Chemistry	IV.C1-9	3.1.1-41	B
Valve Body (Class 1)	Pressure Boundary	Cast Austenitic Stainless Steel (CASS)	Treated Water (Internal) > 482 F	Cumulative Fatigue Damage/Fatigue	TLAA	IV.C1-15	3.1.1-3	A, 1
Valve Body (Class 1)	Pressure Boundary	Cast Austenitic Stainless Steel (CASS)	Treated Water (Internal) > 482 F	Loss of Fracture Toughness/Thermal Aging Embrittlement	ASME Section XI Inservice Inspection, Subsections IWB, IWC, and IWD	IV.C1-3	3.1.1-55	A
Valve Body (Class 1)	Pressure Boundary	Cast Austenitic Stainless Steel (CASS)	Treated Water (Internal) > 482 F	Loss of Material/Pitting and Crevice Corrosion	One-Time Inspection	IV.C1-14	3.1.1-15	A
Valve Body (Class 1)	Pressure Boundary	Cast Austenitic Stainless Steel (CASS)	Treated Water (Internal) > 482 F	Loss of Material/Pitting and Crevice Corrosion	Water Chemistry	IV.C1-14	3.1.1-15	B
Valve Body (Class 1)	Pressure Boundary	Stainless Steel	Air - Indoor (External)	None	None	IV.E-2	3.1.1-86	A
Valve Body (Class 1)	Pressure Boundary	Stainless Steel	Treated Water (Internal) > 140 F	Cracking/Stress Corrosion Cracking	ASME Section XI Inservice Inspection, Subsections IWB, IWC, and IWD	IV.C1-1	3.1.1-48	E, 3
Valve Body (Class 1)	Pressure Boundary	Stainless Steel	Treated Water (Internal) > 140 F	Cracking/Stress Corrosion Cracking	Water Chemistry	IV.C1-1	3.1.1-48	E, 3
Valve Body (Class 1)	Pressure Boundary	Stainless Steel	Treated Water (Internal) > 140 F	Cumulative Fatigue Damage/Fatigue	TLAA	IV.C1-15	3.1.1-3	A, 1
Valve Body (Class 1)	Pressure Boundary	Stainless Steel	Treated Water (Internal) > 140 F	Loss of Material/Pitting and Crevice Corrosion	One-Time Inspection	IV.C1-14	3.1.1-15	A
Valve Body (Class 1)	Pressure Boundary	Stainless Steel	Treated Water (Internal) > 140 F	Loss of Material/Pitting and Crevice Corrosion	Water Chemistry	IV.C1-14	3.1.1-15	B

Notes	Definition of Note
A	Consistent with NUREG-1801 item for component, material, environment, and aging effect. AMP is consistent with NUREG-1801 AMP.
B	Consistent with NUREG-1801 item for component, material, environment, and aging effect. AMP takes some exceptions to NUREG-1801 AMP.
C	Component is different, but consistent with NUREG-1801 item for material, environment, and aging effect. AMP is consistent with NUREG-1801 AMP.
D	Component is different, but consistent with NUREG-1801 item for material, environment, and aging effect. AMP takes some exceptions to NUREG-1801 AMP.
E	Consistent with NUREG-1801 item for material, environment and aging effect, but a different aging management program is credited or NUREG-1801 identifies a plant-specific aging management program.
F	Material not in NUREG-1801 for this component.
G	Environment not in NUREG-1801 for this component and material.
H	Aging effect not in NUREG-1801 for this component, material and environment combination.
I	Aging effect in NUREG-1801 for this component, material and environment combination is not applicable.
J	Neither the component nor the material and environment combination is evaluated in NUREG-1801.

Plant Specific Notes:

1. The TLAA designation in the Aging Management Program column indicates fatigue of this component is evaluated in Section 4.3.

2. The NUREG-1801 "One-Time Inspection of ASME Code Class 1 Small-Bore Piping" aging management program is applicable only to plants that have not experienced cracking of ASME Code Class 1 small-bore piping. Based on previous Hope Creek operating experience with Class 1 small-bore pipe cracking, a new plant-specific periodic inspection program will be used. The "Small-Bore Class 1 Piping Inspection" aging management program is a plant-specific periodic program that will be implemented to manage cracking by periodic volumetric examinations of small-bore Class 1 piping.

3. The Water Chemistry and ASME Section XI In-Service Inspection, Subsections IWB, IWC, and IWD aging management programs will be used to manage the aging effect of cracking in restricting orifices, flow devices, thermowells and valve bodies <NPS 4".

3.2 AGING MANAGEMENT OF ENGINEERED SAFETY FEATURES

3.2.1 INTRODUCTION

This section provides the results of the aging management review for those components identified in Section 2.3.2, Engineered Safety Features, as being subject to aging management review. The systems, or portions of systems, which are addressed in this section are described in the indicated sections.

- Containment Hydrogen Recombiner System (2.3.2.2)
- Core Spray System (2.3.2.3)
- Filtration, Recirculation, and Ventilation System (2.3.2.4)
- High Pressure Coolant Injection (HPCI) System (2.3.2.5)
- Hydrogen and Oxygen Analyzer System (2.3.2.6)
- Reactor Core Isolation Cooling (RCIC) System (2.3.2.7)
- Residual Heat Removal (RHR) System (2.3.2.8)
- Vacuum Relief Valve System (2.3.2.9)

3.2.2 RESULTS

The following tables summarize the results of the aging management review for Engineered Safety Features.

Table 3.2.2-1 Summary of Aging Management Evaluation – Containment Hydrogen Recombiner System

Table 3.2.2-2 Summary of Aging Management Evaluation – Core Spray System

Table 3.2.2-3 Summary of Aging Management Evaluation – Filtration, Recirculation, and Ventilation System

Table 3.2.2-4 Summary of Aging Management Evaluation – High Pressure Coolant Injection (HPCI) System

Table 3.2.2-5 Summary of Aging Management Evaluation – Hydrogen and Oxygen Analyzer System

Table 3.2.2-6 Summary of Aging Management Evaluation – Reactor Core Isolation Cooling (RCIC) System

Table 3.2.2-7 Summary of Aging Management Evaluation – Residual Heat Removal (RHR) System

Table 3.2.2-8 Summary of Aging Management Evaluation – Vacuum Relief Valve System

3.2.2.1 Materials, Environments, Aging Effects Requiring Management And Aging Managements Programs

3.2.2.1.1 Containment Hydrogen Recombiner System

Materials

The materials of construction for the Containment Hydrogen Recombiner System components are:

- Carbon and Low Alloy Steel Bolting
- Carbon Steel
- Stainless Steel

Environments

The Containment Hydrogen Recombiner System components are exposed to the following environments:

- Air - Indoor
- Air/Gas - Wetted
- Treated Water

Aging Effects Requiring Management

The following aging effects associated with the Containment Hydrogen Recombiner System components require management:

- Loss of Material/Galvanic Corrosion
- Loss of Material/General, Pitting and Crevice Corrosion
- Loss of Preload/Thermal Effects, Gasket Creep, and Self-Loosening

Aging Management Programs

The following aging management programs manage the aging effects for the Containment Hydrogen Recombiner System components:

- Bolting Integrity (B.2.1.12)
- External Surfaces Monitoring (B.2.1.25)
- Inspection of Internal Surfaces in Miscellaneous Piping and Ducting Components (B.2.1.26)
- One-Time Inspection (B.2.1.22)
- Periodic Inspection (B.2.2.2)
- Water Chemistry (B.2.1.2)

Table 3.2.2-1, Summary of Aging Management Evaluation – Containment Hydrogen Recombiner System summarizes the results of the aging management review for the Containment Hydrogen Recombiner System.

3.2.2.1.2 Core Spray System

Materials

The materials of construction for the Core Spray System components are:

- Carbon and Low Alloy Steel Bolting
- Carbon Steel
- Gray Cast Iron
- Stainless Steel Bolting
- Stainless Steel

Environments

The Core Spray System components are exposed to the following environments:

- Air - Indoor
- Treated Water
- Treated Water > 140 °F

Aging Effects Requiring Management

The following aging effects associated with Core Spray System components require management:

- Cracking/Stress Corrosion Cracking, Thermal and Mechanical Loading
- Cumulative Fatigue Damage/Fatigue
- Loss of Material/Galvanic Corrosion
- Loss of Material/General, Pitting and Crevice Corrosion
- Loss of Material/Selective Leaching
- Loss of Preload/Thermal Effects, Gasket Creep, and Self-Loosening

Aging Management Programs

The following aging management programs manage the aging effects for the Core Spray System components:

- ASME Section XI Inservice Inspection, Subsections IWB, IWC, and IWD (B.2.1.1)
- Bolting Integrity (B.2.1.12)
- External Surfaces Monitoring (B.2.1.25)

- One-Time Inspection (B.2.1.22)
- Selective Leaching of Materials (B.2.1.23)
- Small-Bore Class 1 Piping Inspection (B.2.2.6)
- TLAA
- Water Chemistry (B.2.1.2)

Table 3.2.2-2, Summary of Aging Management Evaluation – Core Spray System summarizes the results of the aging management review for the Core Spray System.

3.2.2.1.3 Filtration, Recirculation, and Ventilation System

Materials

The materials of construction for the Filtration, Recirculation, and Ventilation System components are:

- Carbon and Low Alloy Steel Bolting
- Carbon Steel
- Copper Alloy with 15% Zinc or More
- Copper Alloy with less than 15% Zinc
- Elastomer
- Galvanized Steel
- Polymer
- Stainless Steel
- Stainless Steel Bolting

Environments

The Filtration, Recirculation, and Ventilation System components are exposed to the following environments:

- Air - Indoor
- Air - Outdoor
- Air/Gas - Wetted

Aging Effects Requiring Management

The following aging effects associated with the Filtration, Recirculation, and Ventilation System components require management:

- Hardening and Loss of Strength/Elastomer Degradation
- Loss of Material/General, Pitting and Crevice Corrosion
- Loss of Preload/Thermal Effects, Gasket Creep, and Self-Loosening

Aging Management Programs

The following aging management programs manage the aging effects for the Filtration, Recirculation, and Ventilation System components:

- Bolting Integrity (B.2.1.12)
- External Surfaces Monitoring (B.2.1.25)
- Inspection of Internal Surfaces in Miscellaneous Piping and Ducting Components (B.2.1.26)
- Periodic Inspection (B.2.2.2)

Table 3.2.2-3, Summary of Aging Management Evaluation – Filtration, Recirculation, and Ventilation System summarizes the results of the aging management review for the Filtration, Recirculation, and Ventilation System.

3.2.2.1.4 High Pressure Coolant Injection (HPCI) System

Materials

The materials of construction for the High Pressure Coolant Injection (HPCI) System components are:

- Carbon and Low Alloy Steel Bolting
- Carbon Steel
- Copper Alloy with 15% Zinc or More
- Copper Alloy with less than 15% Zinc
- Glass
- Gray Cast Iron
- Stainless Steel Bolting
- Stainless Steel

Environments

The High Pressure Coolant Injection (HPCI) System components are exposed to the following environments:

- Air - Indoor
- Air/Gas - Wetted
- Lubricating Oil
- Steam
- Treated Water
- Treated Water > 140 °F

Aging Effects Requiring Management

The following aging effects associated with the High Pressure Coolant Injection (HPCI) System components require management:

- Cracking/Stress Corrosion Cracking, Thermal and Mechanical Loading
- Cumulative Fatigue Damage/Fatigue
- Loss of Material/Galvanic Corrosion
- Loss of Material/General, Pitting and Crevice Corrosion
- Loss of Material/Selective Leaching
- Loss of Preload/Thermal Effects, Gasket Creep, and Self-Loosening
- Reduction of Heat Transfer/Fouling
- Wall Thinning/Flow Accelerated Corrosion

Aging Management Programs

The following aging management programs manage the aging effects for the High Pressure Coolant Injection (HPCI) System components:

- ASME Section XI Inservice Inspection, Subsections IWB, IWC, and IWD (B.2.1.1)
- Bolting Integrity (B.2.1.12)
- BWR Stress Corrosion Cracking (B.2.1.7)
- External Surfaces Monitoring (B.2.1.25)
- Flow-Accelerated Corrosion (B.2.1.11)
- Inspection of Internal Surfaces in Miscellaneous Piping and Ducting Components (B.2.1.26)
- Lubricating Oil Analysis (B.2.1.27)
- One-Time Inspection (B.2.1.22)
- Periodic Inspection (B.2.2.2)
- Selective Leaching of Materials (B.2.1.23)
- Small-Bore Class 1 Piping Inspection (B.2.2.6)
- TLAA
- Water Chemistry (B.2.1.2)

Table 3.2.2-4, Summary of Aging Management Evaluation – High Pressure Coolant Injection (HPCI) System summarizes the results of the aging management review for the High Pressure Coolant Injection (HPCI) System.

3.2.2.1.5 Hydrogen and Oxygen Analyzer System

Materials

The materials of construction for the Hydrogen and Oxygen Analyzer System components are:

- Carbon and Low Alloy Steel Bolting
- Glass
- Stainless Steel

Environments

The Hydrogen and Oxygen Analyzer System components are exposed to the following environments:

- Air - Indoor
- Air - Outdoor
- Air/Gas - Dry
- Air/Gas - Wetted

Aging Effects Requiring Management

The following aging effects associated with the Hydrogen and Oxygen Analyzer System components require management:

- Loss of Material/General, Pitting and Crevice Corrosion
- Loss of Preload/Thermal Effects, Gasket Creep, and Self-Loosening
- Reduction of Heat Transfer/Fouling

Aging Management Programs

The following aging management programs manage the aging effects for the Hydrogen and Oxygen Analyzer System components:

- Bolting Integrity (B.2.1.12)
- Periodic Inspection (B.2.2.2)

Table 3.2.2-5, Summary of Aging Management Evaluation – Hydrogen and Oxygen Analyzer System summarizes the results of the aging management review for the Hydrogen and Oxygen Analyzer System.

3.2.2.1.6 Reactor Core Isolation Cooling (RCIC) System

Materials

The materials of construction for the Reactor Core Isolation Cooling (RCIC) System components are:

- Carbon and Low Alloy Steel Bolting
- Carbon Steel
- Copper Alloy with 15% Zinc or More
- Copper Alloy with less than 15% Zinc
- Glass
- Gray Cast Iron
- Stainless Steel Bolting
- Stainless Steel

Environments

The Reactor Core Isolation Cooling (RCIC) System components are exposed to the following environments:

- Air - Indoor
- Air/Gas - Wetted
- Lubricating Oil
- Steam
- Treated Water
- Treated Water > 140 °F

Aging Effects Requiring Management

The following aging effects associated with the Reactor Core Isolation Cooling (RCIC) System components require management:

- Cracking/Stress Corrosion Cracking, Thermal and Mechanical Loading
- Cumulative Fatigue Damage/Fatigue
- Loss of Material/Galvanic Corrosion
- Loss of Material/General, Pitting and Crevice Corrosion
- Loss of Material/Selective Leaching
- Loss of Preload/Thermal Effects, Gasket Creep, and Self-Loosening
- Reduction of Heat Transfer/Fouling
- Wall Thinning/Flow Accelerated Corrosion

Aging Management Programs

The following aging management programs manage the aging effects for the Reactor Core Isolation Cooling (RCIC) System components:

- ASME Section XI Inservice Inspection, Subsections IWB, IWC, and IWD (B.2.1.1)
- Bolting Integrity (B.2.1.12)
- BWR Stress Corrosion Cracking (B.2.1.7)
- External Surfaces Monitoring (B.2.1.25)
- Flow-Accelerated Corrosion (B.2.1.11)
- Inspection of Internal Surfaces in Miscellaneous Piping and Ducting Components (B.2.1.26)
- Lubricating Oil Analysis (B.2.1.27)
- One-Time Inspection (B.2.1.22)
- Periodic Inspection (B.2.2.2)
- Selective Leaching of Materials (B.2.1.23)
- Small-Bore Class 1 Piping Inspection (B.2.2.6)
- TLAA
- Water Chemistry (B.2.1.2)

Table 3.2.2-6, Summary of Aging Management Evaluation – Reactor Core Isolation Cooling (RCIC) System summarizes the results of the aging management review for the Reactor Core Isolation Cooling (RCIC) System.

3.2.2.1.7 Residual Heat Removal (RHR) System

Materials

The materials of construction for the Residual Heat Removal (RHR) System components are:

- Carbon and Low Alloy Steel Bolting
- Carbon Steel
- Ductile Cast Iron
- Glass
- Gray Cast Iron
- Stainless Steel Bolting
- Stainless Steel

Environments

The Residual Heat Removal (RHR) System components are exposed to the following environments:

- Air - Indoor
- Air/Gas - Wetted
- Treated Water
- Treated Water > 140 °F

Aging Effects Requiring Management

The following aging effects associated with the Residual Heat Removal (RHR) System components require management:

- Cracking/Stress Corrosion Cracking, Thermal and Mechanical Loading
- Cumulative Fatigue Damage/Fatigue
- Loss of Material/Galvanic Corrosion
- Loss of Material/General, Pitting and Crevice Corrosion
- Loss of Material/Selective Leaching
- Loss of Preload/Thermal Effects, Gasket Creep, and Self-Loosening

Aging Management Programs

The following aging management programs manage the aging effects for the Residual Heat Removal (RHR) System components:

- ASME Section XI Inservice Inspection, Subsections IWB, IWC, and IWD (B.2.1.1)
- Bolting Integrity (B.2.1.12)
- BWR Stress Corrosion Cracking (B.2.1.7)
- External Surfaces Monitoring (B.2.1.25)
- Inspection of Internal Surfaces in Miscellaneous Piping and Ducting Components (B.2.1.26)
- One-Time Inspection (B.2.1.22)
- Periodic Inspection (B.2.2.2)
- Selective Leaching of Materials (B.2.1.23)
- Small-Bore Class 1 Piping Inspection (B.2.2.6)
- TLAA
- Water Chemistry (B.2.1.2)

Table 3.2.2-7, Summary of Aging Management Evaluation – Residual Heat Removal (RHR) System summarizes the results of the aging management review for the Residual Heat Removal (RHR) System.

3.2.2.1.8 Vacuum Relief Valve System

Materials

The materials of construction for the Vacuum Relief Valve System components are:

- Carbon and Low Alloy Steel Bolting
- Carbon Steel
- Stainless Steel

Environments

The Vacuum Relief Valve System components are exposed to the following environments:

- Air - Indoor
- Air/Gas – Wetted

Aging Effects Requiring Management

The following aging effects associated with the Vacuum Relief Valve System components require management:

- Loss of Material/General, Pitting and Crevice Corrosion
- Loss of Preload/Thermal Effects, Gasket Creep, and Self-Loosening

Aging Management Programs

The following aging management programs manage the aging effects for the Vacuum Relief Valve System components:

- Bolting Integrity (B.2.1.12)
- External Surfaces Monitoring (B.2.1.25)
- Inspection of Internal Surfaces in Miscellaneous Piping and Ducting Components (B.2.1.26)
- Periodic Inspection (B.2.2.2)

Table 3.2.2-8, Summary of Aging Management Evaluation – Vacuum Relief Valve System summarizes the results of the aging management review for the Vacuum Relief Valve System.

3.2.2.2 AMR Results for Which Further Evaluation is Recommended by the GALL Report

NUREG-1801 provides the basis for identifying those programs that warrant further evaluation by the reviewer in the license renewal application. For the Engineered Safety Features, those programs are addressed in the following subsections.

3.2.2.2.1 Cumulative Fatigue Damage

Fatigue is a TLAA as defined in 10 CFR 54.3. TLAAs are required to be evaluated in accordance with 10 CFR 54.21(c). The evaluation of metal fatigue as a TLAA for the High Pressure Coolant Injection (HPCI) System, Reactor Core Isolation Cooling (RCIC) System and Residual Heat Removal (RHR) System is discussed in Section 4.3.

3.2.2.2.2 Loss of Material due to Cladding

Item Number 3.2.1-2 is applicable to PWRs only and is not used for Hope Creek.

3.2.2.2.3 Loss of Material due to Pitting and Crevice Corrosion

1. *Loss of material due to pitting and crevice corrosion could occur for internal surfaces of stainless steel containment isolation piping, piping components, and piping elements exposed to treated water. The existing AMP relies on monitoring and control of water chemistry to mitigate degradation. However, control of water chemistry does not preclude loss of material due to pitting and crevice corrosion at locations of stagnant flow conditions. Therefore, the effectiveness of the chemistry control program should be verified to ensure that corrosion is not occurring. The GALL Report recommends further evaluation of programs to verify the effectiveness of the chemistry control program. A one-time inspection of select components at susceptible locations is an acceptable method to determine whether an aging effect is not occurring or an aging effect is progressing very slowly such that the component's intended function will be maintained during the period of extended operation.*

   Item Number 3.2.1-3 is not applicable to Hope Creek Engineered Safety Features systems. Engineered Safety Features system stainless steel containment isolation piping, piping components, and piping elements exposed to treated water are evaluated with other Class 1 components. See LRA Table 3.1.1 Item Number 3.1.1-15. As discussed in subsection 3.1.2.2.2.3 for Item Number 3.1.1-15 in LRA Table 3.1.1, Hope Creek will implement a One-Time Inspection program, B.2.1.22, for susceptible locations to verify the effectiveness of the Water Chemistry program, B.2.1.2, to manage the loss of material due to pitting and crevice corrosion of the stainless steel, reactor coolant pressure boundary components

including piping, piping components and fittings exposed to treated water (including steam) in the following ESF systems: Core Spray, High Pressure Coolant Injection (HPCI), Reactor Core Isolation Cooling (RCIC) and Residual Heat Removal (RHR). The One-Time Inspection and Water Chemistry programs are described in Appendix B.

2. *Loss of material from pitting and crevice corrosion could occur for stainless steel piping, piping components, and piping elements exposed to soil. The GALL Report recommends further evaluation of a plant-specific AMP to ensure that the aging effect is adequately managed. Acceptance criteria are described in Branch Technical Position RLSB-1.*

   Item Number 3.2.1-4 is not applicable to Hope Creek. There are no stainless steel piping, piping components, or piping elements exposed to soil in the Hope Creek Engineered Safety Features systems.

3. *Loss of material from pitting and crevice corrosion could occur for BWR stainless steel and aluminum piping, piping components, and piping elements exposed to treated water. The existing AMP relies on monitoring and control of water chemistry for BWRs to mitigate degradation. However, control of water chemistry does not preclude loss of material due to pitting and crevice corrosion at locations of stagnant flow conditions. Therefore, the effectiveness of the chemistry control program should be verified to ensure that corrosion is not occurring. The GALL Report recommends further evaluation of programs to verify the effectiveness of the water chemistry control program. A one-time inspection of select components at susceptible locations is an acceptable method to determine whether an aging effect is not occurring or an aging effect is progressing very slowly such that the component's intended function will be maintained during the period of extended operation.*

   Hope Creek will implement a One-Time Inspection program, B.2.1.22, for susceptible locations to verify the effectiveness of the Water Chemistry program, B.2.1.2, to manage the loss of material due to pitting and crevice corrosion in stainless steel piping, piping components, and piping elements and tanks exposed to treated water in the Containment Hydrogen Recombiner System, Core Spray System, High Pressure Coolant Injection (HPCI) System, Reactor Core Isolation Cooling (RCIC) System and Residual Heat Removal (RHR) System. The Water Chemistry and One-Time Inspection programs are described in Appendix B.

4. *Loss of material from pitting and crevice corrosion could occur for stainless steel and copper alloy piping, piping components, and piping elements exposed to lubricating oil. The existing program relies on the periodic sampling and analysis of lubricating oil to maintain contaminants within acceptable limits, thereby preserving an environment that is not conducive to corrosion. However, control of lube oil contaminants may not always have been adequate to preclude corrosion. Therefore, the effectiveness of lubricating oil control should be verified to ensure that corrosion is not occurring. The GALL Report recommends further evaluation to verify the effectiveness of the lubricating oil program. A one-time inspection of*

selected components at susceptible locations is an acceptable method to ensure that corrosion is not occurring and that the component's intended function will be maintained during the period of extended operation.

Hope Creek will implement a One-Time Inspection program, B.2.1.22, for susceptible locations to verify the effectiveness of the Lubricating Oil Analysis program, B.2.1.27, to manage the loss of material due to pitting and crevice corrosion in stainless steel and copper alloy piping, piping components, piping elements and heat exchangers exposed to lubricating oil in the High Pressure Coolant Injection (HPCI) System and Reactor Core Isolation Cooling (RCIC) System. The Lubricating Oil Analysis and One-Time Inspection programs are described in Appendix B.

5. *Loss of material from pitting and crevice corrosion could occur for of partially encased stainless steel tanks exposed to raw water due to cracking of the perimeter seal from weathering. The GALL Report recommends further evaluation to ensure that the aging effect is adequately managed. The GALL Report recommends that a plant-specific AMP be evaluated because moisture and water can egress under the tank if the perimeter seal is degraded. Acceptance criteria are described in Branch Technical Position RSLB-1.*

   Item Number 3.2.1-7 is not applicable to Hope Creek. There are no partially encased stainless steel tanks in the Hope Creek Engineered Safety Features systems.

6. *Loss of material from pitting and crevice corrosion could occur for stainless steel piping, piping components, piping elements, and tanks exposed to internal condensation. The GALL Report recommends further evaluation of a plant-specific AMP to ensure that the aging effect is adequately managed. Acceptance criteria are described in Branch Technical Position RSLB-1.*

   Hope Creek will implement the Periodic Inspection program, B.2.2.2, to manage the loss of material due to pitting and crevice corrosion in stainless steel piping, piping components, piping elements, heat exchangers and tanks exposed to an air/gas wetted internal environment in the Containment Hydrogen Recombiner System, Filtration, Recirculation, and Ventilation System, High Pressure Coolant Injection (HPCI) System, Hydrogen and Oxygen Analyzer System, Main Steam System, Nuclear Boiler Instrumentation, Reactor Core Isolation Cooling (RCIC) System, Residual Heat Removal (RHR) System and Vacuum Relief Valve System. The Periodic Inspection program is used to manage the aging effects of components that are not covered by other aging management programs, including external surfaces and internal surfaces of non-steel components. The Periodic Inspection program includes visual inspections, physical manipulation and nondestructive volumetric examinations to assure that existing environmental conditions are not causing material degradation that could result in a loss of component intended functions. The Periodic Inspection program is described in Appendix B.

3.2.2.2.4 Reduction of Heat Transfer due to Fouling

1. *Reduction of heat transfer due to fouling could occur for steel, stainless steel, and copper alloy heat exchanger tubes exposed to lubricating oil. The existing AMP relies on monitoring and control of lube oil chemistry to mitigate reduction of heat transfer due to fouling. However, control of lube oil chemistry may not always have been adequate to preclude fouling. Therefore, the effectiveness of lube oil chemistry control should be verified to ensure that fouling is not occurring. The GALL Report recommends further evaluation of programs to verify the effectiveness of lube oil chemistry control. A one-time inspection of select components at susceptible locations is an acceptable method to determine whether an aging effect is not occurring or an aging effect is progressing very slowly such that the component's intended function will be maintained during the period of extended operation.*

   Hope Creek will implement a One-Time Inspection program, B.2.1.22, for susceptible locations to verify the effectiveness of the Lubricating Oil Analysis program, B.2.1.27, to manage the reduction of heat transfer due to fouling in copper alloy heat exchanger components exposed to lubricating oil in the High Pressure Coolant Injection (HPCI) System, Reactor Core Isolation Cooling (RCIC) System and Closed Cycle Cooling Water System. The Lubricating Oil Analysis and One-Time Inspection programs are described in Appendix B.

2. *Reduction of heat transfer due to fouling could occur for stainless steel heat exchanger tubes exposed to treated water. The existing program relies on control of water chemistry to manage reduction of heat transfer due to fouling. However, control of water chemistry may have been inadequate. Therefore, the GALL report recommends that the effectiveness of the chemistry control program should be verified to ensure that reduction of heat transfer due to fouling is not occurring. A one-time inspection is an acceptable method to ensure that reduction of heat transfer is not occurring and that the component's intended function will be maintained during the period of extended operation.*

   Item Number 3.2.1-10 is not applicable to the Hope Creek Engineered Safety Features systems. There are no stainless steel heat exchanger tubes exposed to treated water in the Engineered Safety Features systems. The stainless steel heat exchanger components in the Residual Heat Removal (RHR) System have been evaluated with the Closed Cycle Cooling Water System. See Table 3.3.1 Item Number 3.3.1-3.

3.2.2.2.5 Hardening and Loss of Strength due to Elastomer Degradation

Hardening and loss of strength due to elastomer degradation could occur in elastomer seals and components associated with the BWR Standby Gas Treatment System ductwork and filters exposed to air-indoor uncontrolled. The GALL Report recommends further evaluation of a plant specific AMP to ensure that the aging effect is adequately managed. Acceptance criteria are described in Branch Technical Position RLSB-1.

Hope Creek will implement the Periodic Inspection program, B.2.2.2, to manage hardening and loss of strength due to elastomer degradation in elastomer seals and components that are exposed to indoor air in the Filtration, Recirculation, and Ventilation System. The Periodic Inspection program is used to manage the aging effects of components that are not covered by other aging management programs, including external surfaces and internal surfaces of non-steel components. The Periodic Inspection program includes visual inspections, physical manipulation and nondestructive volumetric examinations to assure that existing environmental conditions are not causing material degradation that could result in a loss of component intended functions. The Periodic Inspection program is described in Appendix B.

3.2.2.2.6 Loss of Material due to Erosion

Item Number 3.2.1-12 is applicable to PWRs only and is not used for Hope Creek.

3.2.2.2.7 Loss of Material due to General Corrosion and Fouling

Loss of material due to general corrosion and fouling can occur for steel drywell and suppression chamber spray system nozzle and flow orifice internal surfaces exposed to air - indoor uncontrolled. This could result in plugging of the spray nozzles and flow orifices. This aging mechanism and effect will apply since the spray nozzles and flow orifices are occasionally wetted, even though the majority of the time this system is on standby. The wetting and drying of these components can accelerate corrosion and fouling. The GALL Report recommends further evaluation of a plant-specific AMP to ensure that the aging effect is adequately managed. Acceptance criteria are described in Branch Technical Position RLSB-1.

Item Number 3.2.1-13 is not applicable to Hope Creek Engineered Safety Features systems. There are no steel spray nozzles in the Hope Creek Engineered Safety Features systems. The spray nozzles in the Residual Heat Removal (RHR) System are stainless steel and are evaluated with Item Number 3.2.1-8. The spray header piping is not subject to wetting and drying, and is normally drained. The open spray nozzles expose the spray header piping internal surfaces to the inerted containment environment. The spray header piping normal internal environment is assumed to be Air/Gas – Wetted and is evaluated with Item Number 3.2.1-32.

3.2.2.2.8 Loss of Material due to General, Pitting, and Crevice Corrosion

1. *Loss of material due to general, pitting and crevice corrosion could occur for BWR steel piping, piping components, and piping elements exposed to treated water. The existing AMP relies on monitoring and control of water chemistry) for BWRs to mitigate degradation. However, control of water chemistry does not preclude loss of material due to general, pitting, and crevice corrosion at locations of stagnant flow conditions. Therefore, the effectiveness of the chemistry control program should be verified to ensure that corrosion is not occurring. The GALL Report recommends*

further evaluation of programs to verify the effectiveness of the water chemistry control program. A one-time inspection of select components at susceptible locations is an acceptable method to determine whether an aging effect is not occurring or an aging effect is progressing very slowly such that the component's intended function will be maintained during the period of extended operation.

Hope Creek will implement a One-Time Inspection program, B.2.1.22, for susceptible locations to verify the effectiveness of the Water Chemistry program, B.2.1.2, to manage loss of material due to general, pitting, and crevice corrosion steel piping, piping components, piping elements and tanks exposed to treated water in the Containment Hydrogen Recombiner System, Core Spray, High Pressure Coolant Injection (HPCI) System, Reactor Core Isolation Cooling (RCIC) System and Residual Heat Removal (RHR) System. The Water Chemistry and One-Time Inspection programs are described in Appendix B.

2. *Loss of material due to general, pitting and crevice corrosion could occur for the internal surfaces of steel containment isolation piping, piping components, and piping elements exposed to treated water. The existing AMP relies on monitoring and control of water chemistry to mitigate degradation. However, control of water chemistry does not preclude loss of material due to general, pitting, and crevice corrosion at locations of stagnant flow conditions. Therefore, the effectiveness of the water chemistry control program should be verified to ensure that corrosion is not occurring. The GALL Report recommends further evaluation of programs to verify the effectiveness of the chemistry control program. A one-time inspection of select components at susceptible locations is an acceptable method to determine whether an aging effect is not occurring or an aging effect is progressing very slowly such that the component's intended function will be maintained during the period of extended operation.*

   Engineered Safety Features system steel containment isolation piping, piping components, and piping elements exposed to treated water are evaluated with other Class 1 components. See LRA Table 3.1.1 Item Number 3.1.1-13. The non-reactor coolant pressure boundary steel components that are exposed to treated water are addressed in line Item Number 3.2.1-14.

3. *Loss of material due to general, pitting and crevice corrosion could occur for steel piping, piping components, and piping elements exposed to lubricating oil. The existing program relies on the periodic sampling and analysis of lubricating oil to maintain contaminants within acceptable limits, thereby preserving an environment that is not conducive to corrosion. However, control of lube oil contaminants may not always have been adequate to preclude corrosion. Therefore, the effectiveness of lubricating oil control should be verified to ensure that corrosion is not occurring. The GALL Report recommends further evaluation to verify the effectiveness of the lubricating oil program. A one-time inspection of selected components at susceptible locations is an acceptable method to*

ensure that corrosion is not occurring and that the component's intended function will be maintained during the period of extended operation.

Hope Creek will implement a One-Time Inspection program, B.2.1.22, for susceptible locations to verify the effectiveness of the Lubricating Oil Analysis program, B.2.1.27, to manage the loss of material due to general, pitting, and crevice corrosion in steel piping, piping components, piping elements and tanks exposed to lubricating oil in the High Pressure Coolant Injection (HPCI) System and Reactor Core Isolation Cooling (RCIC) System. The Lubricating Oil Analysis and One-Time Inspection programs are described in Appendix B.

3.2.2.2.9 Loss of Material due to General, Pitting, Crevice, and Microbiologically-Influenced Corrosion (MIC)

Loss of material due to general, pitting, crevice, and MIC could occur for steel (with or without coating or wrapping) piping, piping components, and piping elements buried in soil. The buried piping and tanks inspection program relies on industry practice, frequency of pipe excavation, and operating experience to manage the effects of loss of material from general, pitting, and crevice corrosion and MIC. The effectiveness of the buried piping and tanks inspection program should be verified to evaluate an applicant's inspection frequency and operating experience with buried components, ensuring that loss of material is not occurring.

Item Number 3.2.1-17 is not applicable to Hope Creek Engineered Safety Features systems. There are no steel (with or without coating or wrapping) piping, piping components, and piping elements buried in soil in the Hope Creek Engineered Safety Features systems.

3.2.2.2.10 Quality Assurance for Aging Management of Non-Safety Related Components

QA provisions applicable to License Renewal are discussed in Section B.1.3.

3.2.2.3 Time-Limited Aging Analysis

The time-limited aging analyses identified below are associated with the Engineered Safety Features components:

- Section 4.3, Metal Fatigue of the Reactor Pressure Vessel, Internals, and Reactor Coolant Pressure Boundary Piping and Components.

3.2.3 CONCLUSION

The Engineered Safety Features piping, piping components, piping elements, heat exchangers, and tanks that are subject to aging management review have been identified in accordance with the requirements of 10 CFR 54.4. The aging management programs selected to manage aging effects for the Engineered

Safety Features components are identified in the summaries in Section 3.2.2.1 above.

A description of these aging management programs is provided in Appendix B, along with the demonstration that the identified aging effects will be managed for the period of extended operation.

Therefore, based on the conclusions provided in Appendix B, the effects of aging associated with the Engineered Safety Features components will be adequately managed so that there is reasonable assurance that the intended function(s) will be maintained consistent with the current licensing basis during the period of extended operation.

Table 3.2.1 Summary of Aging Management Evaluations for the Engineered Safety Features

Item Number	Component	Aging Effect/Mechanism	Aging Management Programs	Further Evaluation Recommended	Discussion
3.2.1-1	Steel and stainless steel piping, piping components, and piping elements in emergency core cooling system	Cumulative fatigue damage	TLAA, evaluated in accordance with 10 CFR 54.21(c)	Yes, TLAA	Fatigue is a TLAA; further evaluation is documented in Subsection 3.2.2.2.1.
3.2.1-2	PWR Only				
3.2.1-3	Stainless steel containment isolation piping and components internal surfaces exposed to treated water	Loss of material due to pitting and crevice corrosion	Water Chemistry and One-Time Inspection	Yes, detection of aging effects is to be evaluated	Not Applicable. See Subsection 3.2.2.2.3.1.
3.2.1-4	Stainless steel piping, piping components, and piping elements exposed to soil	Loss of material due to pitting and crevice corrosion	A plant-specific aging management program is to be evaluated.	Yes, plant-specific	Not Applicable. See Subsection 3.2.2.2.3.2.

Table 3.2.1 Summary of Aging Management Evaluations for the Engineered Safety Features

Item Number	Component	Aging Effect/Mechanism	Aging Management Programs	Further Evaluation Recommended	Discussion
3.2.1-5	Stainless steel and aluminum piping, piping components, and piping elements exposed to treated water	Loss of material due to pitting and crevice corrosion	Water Chemistry and One-Time Inspection	Yes, detection of aging effects is to be evaluated	Consistent with NUREG-1801 with exceptions. The One-Time Inspection program, B.2.1.22, will be used to verify the effectiveness of the Water Chemistry program, B.2.1.2, to manage the loss of material due to pitting and crevice corrosion in stainless steel piping, piping components, and piping elements and tanks exposed to treated water. Exceptions apply to the NUREG-1801 recommendations for Water Chemistry program implementation. See Subsection 3.2.2.2.3.3.

Table 3.2.1 Summary of Aging Management Evaluations for the Engineered Safety Features

Item Number	Component	Aging Effect/Mechanism	Aging Management Programs	Further Evaluation Recommended	Discussion
3.2.1-6	Stainless steel and copper alloy piping, piping components, and piping elements exposed to lubricating oil	Loss of material due to pitting and crevice corrosion	Lubricating Oil Analysis and One-Time Inspection	Yes, detection of aging effects is to be evaluated	Consistent with NUREG-1801 with exceptions. The One-Time Inspection program, B.2.1.22, will be used to verify the effectiveness of the Lubricating Oil Analysis program, B.2.1.27, to manage the loss of material due to pitting and crevice corrosion in stainless steel and copper alloy piping, piping components, piping elements and heat exchangers exposed to lubricating oil. Exceptions apply to the NUREG-1801 recommendations for Lubricating Oil Analysis program implementation. See Subsection 3.2.2.2.3.4.

Table 3.2.1 Summary of Aging Management Evaluations for the Engineered Safety Features

Item Number	Component	Aging Effect/Mechanism	Aging Management Programs	Further Evaluation Recommended	Discussion
3.2.1-7	Partially encased stainless steel tanks with breached moisture barrier exposed to raw water	Loss of material due to pitting and crevice corrosion	A plant-specific aging management program is to be evaluated for pitting and crevice corrosion of tank bottoms because moisture and water can egress under the tank due to cracking of the perimeter seal from weathering.	Yes, plant-specific	Not Applicable. See Subsection 3.2.2.2.3.5.
3.2.1-8	Stainless steel piping, piping components, piping elements, and tank internal surfaces exposed to condensation (internal)	Loss of material due to pitting and crevice corrosion	A plant-specific aging management program is to be evaluated.	Yes, plant-specific	The Periodic Inspection program, B.2.2.2, will be used to manage the loss of material due to pitting and crevice corrosion in stainless steel piping, piping components, piping elements, heat exchangers and tanks internal surfaces exposed to an air/gas wetted environment. See Subsection 3.2.2.2.3.6.

Table 3.2.1 Summary of Aging Management Evaluations for the Engineered Safety Features

Item Number	Component	Aging Effect/Mechanism	Aging Management Programs	Further Evaluation Recommended	Discussion
3.2.1-9	Steel, stainless steel, and copper alloy heat exchanger tubes exposed to lubricating oil	Reduction of heat transfer due to fouling	Lubricating Oil Analysis and One-Time Inspection	Yes, detection of aging effects is to be evaluated	Consistent with NUREG-1801 with exceptions. The One-Time Inspection program, B.2.1.22, will be used to verify the effectiveness of the Lubricating Oil Analysis program, B.2.1.27, to manage the reduction of heat transfer due to fouling in copper alloy heat exchanger tubes exposed to lubricating oil. Exceptions apply to the NUREG-1801 recommendations for the Lubricating Oil Analysis program implementation. See Subsection 3.2.2.2.4.1.
3.2.1-10	Stainless steel heat exchanger tubes exposed to treated water	Reduction of heat transfer due to fouling	Water Chemistry and One-Time Inspection	Yes, detection of aging effects is to be evaluated	Not Applicable. See Subsection 3.2.2.2.4.2.
3.2.1-11	Elastomer seals and components in standby gas treatment system exposed to air – indoor uncontrolled	Hardening and loss of strength due to elastomer degradation	A plant-specific aging management program is to be evaluated.	Yes, plant-specific	The Periodic Inspection program, B.2.2.2, will be used to manage hardening and loss of strength due to elastomer degradation in elastomer seals and components that are exposed to indoor air. See Subsection 3.2.2.2.5.

Table 3.2.1 Summary of Aging Management Evaluations for the Engineered Safety Features

Item Number	Component	Aging Effect/Mechanism	Aging Management Programs	Further Evaluation Recommended	Discussion
3.2.1-12	PWR Only				
3.2.1-13	Steel drywell and suppression chamber spray system nozzle and flow orifice internal surfaces exposed to air – indoor uncontrolled (internal)	Loss of material due to general corrosion and fouling	A plant-specific aging management program is to be evaluated.	Yes, plant-specific	Not Applicable. See Subsection 3.2.2.2.7.
3.2.1-14	Steel piping, piping components, and piping elements exposed to treated water	Loss of material due to general, pitting, and crevice corrosion	Water Chemistry and One-Time Inspection	Yes, detection of aging effects is to be evaluated	Consistent with NUREG-1801 with exceptions. The One-Time Inspection program, B.2.1.22, will be used to verify the effectiveness of the Water Chemistry program, B.2.1.2, to manage loss of material due to general, pitting, and crevice corrosion steel piping, piping components, piping elements and tanks exposed to treated water. Exceptions apply to the NUREG-1801 recommendations for the Water Chemistry program implementation. See Subsection 3.2.2.2.8.1.

Table 3.2.1 Summary of Aging Management Evaluations for the Engineered Safety Features

Item Number	Component	Aging Effect/Mechanism	Aging Management Programs	Further Evaluation Recommended	Discussion
3.2.1-15	Steel containment isolation piping, piping components, and piping elements internal surfaces exposed to treated water	Loss of material due to general, pitting, and crevice corrosion	Water Chemistry and One-Time Inspection	Yes, detection of aging effects is to be evaluated	Not Applicable. See Subsection 3.2.2.2.8.2.
3.2.1-16	Steel piping, piping components, and piping elements exposed to lubricating oil	Loss of material due to general, pitting, and crevice corrosion	Lubricating Oil Analysis and One-Time Inspection	Yes, detection of aging effects is to be evaluated	Consistent with NUREG-1801 with exceptions. The One-Time Inspection program, B.2.1.22, will be used to verify the effectiveness of the Lubricating Oil Analysis program, B.2.1.27, to manage loss of material due to general, pitting, and crevice corrosion in steel piping, piping components, piping elements and tanks exposed to lubricating oil. Exceptions apply to the NUREG-1801 recommendations for the Lubricating Oil Analysis program implementation. See Subsection 3.2.2.2.8.3.

Table 3.2.1 Summary of Aging Management Evaluations for the Engineered Safety Features

Item Number	Component	Aging Effect/Mechanism	Aging Management Programs	Further Evaluation Recommended	Discussion
3.2.1-17	Steel (with or without coating or wrapping) piping, piping components, and piping elements buried in soil	Loss of material due to general, pitting, crevice, and microbiologically-influenced corrosion	Buried Piping and Tanks Surveillance or Buried Piping and Tanks Inspection	No Yes, detection of aging effects and operating experience are to be further evaluated	Not Applicable. See Subsection 3.2.2.2.9.

Table 3.2.1 Summary of Aging Management Evaluations for the Engineered Safety Features

Item Number	Component	Aging Effect/Mechanism	Aging Management Programs	Further Evaluation Recommended	Discussion
3.2.1-18	Stainless steel piping, piping components, and piping elements exposed to treated water >60°C (>140°F)	Cracking due to stress corrosion cracking and intergranular stress corrosion cracking	BWR Stress Corrosion Cracking and Water Chemistry	No	Consistent with NUREG-1801 with exceptions. The Water Chemistry program, B.2.1.2, and BWR Stress Corrosion Cracking program, B.2.1.7, will be used to manage the cracking due to stress corrosion cracking and intergranular stress corrosion cracking in stainless steel piping, piping components, and piping elements exposed to treated water >140°F in the High Pressure Coolant Injection (HPCI) System, Reactor Core Isolation Cooling (RCIC) System and Residual Heat Removal (RHR) System. Exceptions apply to the NUREG-1801 recommendations for the Water Chemistry program implementation.

Table 3.2.1 Summary of Aging Management Evaluations for the Engineered Safety Features

Item Number	Component	Aging Effect/Mechanism	Aging Management Programs	Further Evaluation Recommended	Discussion
3.2.1-19	Steel piping, piping components, and piping elements exposed to steam or treated water	Wall thinning due to flow accelerated corrosion	Flow-Accelerated Corrosion	No	Consistent with NUREG-1801 with exceptions. The Flow-Accelerated Corrosion program, B.2.1.11, will be used to manage wall thinning due to flow accelerated corrosion in steel piping, piping components, and piping elements exposed to steam in the High Pressure Coolant Injection (HPCI) System and Reactor Core Isolation Cooling (RCIC) System. Exceptions apply to the NUREG-1801 recommendations for the Flow-Accelerated Corrosion program implementation.
3.2.1-20	Cast austenitic stainless steel piping, piping components, and piping elements exposed to treated water (borated or unborated) >250°C (>482°F)	Loss of fracture toughness due to thermal aging embrittlement	Thermal Aging Embrittlement of CASS	No	Not Applicable. There are no cast austenitic stainless steel piping, piping components or piping elements, subject to treated water >482°F in the Engineered Safety Features systems.
3.2.1-21	High-strength steel closure bolting exposed to air with steam or water leakage	Cracking due to cyclic loading, stress corrosion cracking	Bolting Integrity	No	Not Applicable. There is no high-strength steel closure bolting in the Engineered Safety Features systems.

Table 3.2.1 Summary of Aging Management Evaluations for the Engineered Safety Features

Item Number	Component	Aging Effect/Mechanism	Aging Management Programs	Further Evaluation Recommended	Discussion
3.2.1-22	Steel closure bolting exposed to air with steam or water leakage	Loss of material due to general corrosion	Bolting Integrity	No	Not Applicable. AMR methodology for steel closure bolting predicts pitting and crevice corrosion in addition to general corrosion. See Item Number 3.2.1-23.
3.2.1-23	Steel bolting and closure bolting exposed to air – outdoor (external), or air – indoor uncontrolled (external)	Loss of material due to general, pitting, and crevice corrosion	Bolting Integrity	No	Consistent with NUREG-1801 with exceptions. The Bolting Integrity program, B.2.1.12, will be used to manage the loss of material due to general, pitting, and crevice corrosion in steel bolting exposed to outdoor air and indoor air the Containment Hydrogen Recombiner System, Core Spray System, Feedwater System, High Pressure Coolant Injection (HPCI) System, Hydrogen and Oxygen Analyzer System, Main Steam System, Nuclear Boiler Instrumentation, Process and Post-Accident Sampling Systems, Reactor Core Isolation Cooling (RCIC) System, Reactor Pressure Vessel, Reactor Recirculation System, Reactor Water Cleanup System, Residual Heat Removal (RHR) System, Standby Liquid Control System and Vacuum Relief Valve System. Exceptions apply to the NUREG-1801 recommendations for the Bolting Integrity program implementation. Components in the Filtration, Recirculation, and Ventilation

Table 3.2.1 Summary of Aging Management Evaluations for the Engineered Safety Features

Item Number	Component	Aging Effect/Mechanism	Aging Management Programs	Further Evaluation Recommended	Discussion
					System have been aligned to this item based on material, environment and aging effect. The External Surfaces Monitoring program, B.2.1.25, has been substituted to manage the loss of material due to general, pitting, and crevice corrosion in steel bolting exposed to outdoor air in this system. Components in the Primary Containment have been aligned to this item based on material, environment and aging effect. The ASME Section XI, Subsection IWE program, B.2.1.28, has been substituted to manage loss of material due to general, pitting, and crevice corrosion in steel bolting exposed to indoor air in this structure. Internal air environments are assumed to contain significant amounts of moisture where condensation may occur. Steel components are subject to the additional aging mechanisms of pitting and crevice corrosion in this environment. See Item Number 3.2.1-34.
3.2.1-24	Steel closure bolting exposed to air – indoor uncontrolled (external)	Loss of preload due to thermal effects, gasket creep, and self-loosening	Bolting Integrity	No	Consistent with NUREG-1801 with exceptions. The Bolting Integrity program, B.2.1.12, will be used to manage the loss of preload due to thermal effects, gasket creep, and self-loosening in steel bolting

Table 3.2.1 Summary of Aging Management Evaluations for the Engineered Safety Features

Item Number	Component	Aging Effect/Mechanism	Aging Management Programs	Further Evaluation Recommended	Discussion
					exposed to indoor air in the Containment Hydrogen Recombiner System, Core Spray System, Filtration, Recirculation, and Ventilation System, High Pressure Coolant Injection (HPCI) System, Hydrogen and Oxygen Analyzer System, Reactor Core Isolation Cooling (RCIC) System, Residual Heat Removal (RHR) System and Vacuum Relief Valve System. Exceptions apply to the NUREG-1801 recommendations for the Bolting Integrity program implementation. Components in the Primary Containment have been aligned to this item based on material, environment and aging effect. The ASME Section XI, Subsection IWE program, B.2.1.28, and the 10 CFR Part 50, Appendix J program, B.2.1.30, have been substituted to manage loss of preload due self-loosening in steel bolting exposed to indoor air in this structure.
3.2.1-25	Stainless steel piping, piping components, and piping elements exposed to closed cycle cooling water >60°C (>140°F)	Cracking due to stress corrosion cracking	Closed-Cycle Cooling Water System	No	Not Applicable. There are no stainless steel piping, piping components, and piping elements exposed to closed cycle cooling water >60°C (>140°F) in the Engineered Safety Features systems.

Table 3.2.1 Summary of Aging Management Evaluations for the Engineered Safety Features

Item Number	Component	Aging Effect/Mechanism	Aging Management Programs	Further Evaluation Recommended	Discussion
3.2.1-26	Steel piping, piping components, and piping elements exposed to closed cycle cooling water	Loss of material due to general, pitting, and crevice corrosion	Closed-Cycle Cooling Water System	No	Not Applicable. There are no steel piping, piping components, and piping elements exposed to closed cycle cooling water in the Engineered Safety Features systems.
3.2.1-27	Steel heat exchanger components exposed to closed cycle cooling water	Loss of material due to general, pitting, crevice, and galvanic corrosion	Closed-Cycle Cooling Water System	No	Not Applicable. The steel heat exchanger components in the Residual Heat Removal (RHR) System have been evaluated with the Closed Cycle Cooling Water System. See Table 3.3.1 Item Number 3.3.1-48, which has the same material, environment and aging effect combinations this line Item Number.
3.2.1-28	Stainless steel piping, piping components, piping elements, and heat exchanger components exposed to closed-cycle cooling water	Loss of material due to pitting and crevice corrosion	Closed-Cycle Cooling Water System	No	Not Applicable. There are no stainless steel piping, piping components and piping elements exposed to closed-cycle cooling water in the Engineered Safety Features systems. The stainless steel heat exchanger components in the Residual Heat Removal (RHR) System have been evaluated with the Closed Cycle Cooling Water System. See Table 3.3.1 Item Number 3.3.1-50.

Table 3.2.1 Summary of Aging Management Evaluations for the Engineered Safety Features

Item Number	Component	Aging Effect/Mechanism	Aging Management Programs	Further Evaluation Recommended	Discussion
3.2.1-29	Copper alloy piping, piping components, piping elements, and heat exchanger components exposed to closed cycle cooling water	Loss of material due to pitting, crevice, and galvanic corrosion	Closed-Cycle Cooling Water System	No	Not Applicable. The copper alloy heat exchanger components exposed to closed cycle cooling water in the Core Spray System, Filtration, Recirculation, and Ventilation System, High Pressure Coolant Injection (HPCI) System, Reactor Core Isolation Cooling (RCIC) System and Residual Heat Removal (RHR) System have been evaluated with the Closed Cycle Cooling Water System. See Table 3.3.1 Item Number 3.3.1-51.
3.2.1-30	Stainless steel and copper alloy heat exchanger tubes exposed to closed cycle cooling water	Reduction of heat transfer due to fouling	Closed-Cycle Cooling Water System	No	Not Applicable. The stainless steel and copper alloy heat exchanger components exposed to closed cycle cooling water in the Core Spray System, Filtration, Recirculation, and Ventilation System, High Pressure Coolant Injection (HPCI) System, Reactor Core Isolation Cooling (RCIC) System and Residual Heat Removal (RHR) System have been evaluated with the Closed Cycle Cooling Water System. See Table 3.3.1 Item Number 3.3.1-52.

Table 3.2.1 Summary of Aging Management Evaluations for the Engineered Safety Features

Item Number	Component	Aging Effect/Mechanism	Aging Management Programs	Further Evaluation Recommended	Discussion
3.2.1-31	External surfaces of steel components including ducting, piping, ducting closure bolting, and containment isolation piping external surfaces exposed to air - indoor uncontrolled (external); condensation (external) and air - outdoor (external)	Loss of material due to general corrosion	External Surfaces Monitoring	No	Consistent with NUREG-1801. The External Surfaces Monitoring program, B.2.1.25, will be used to manage the loss of material due to general corrosion on the external surfaces of piping, piping components and piping elements, fan housing, turbine casing, ducting and components, bolting and tanks exposed to indoor air in the Containment Hydrogen Recombiner System, Core Spray System, Filtration, Recirculation, and Ventilation System, High Pressure Coolant Injection (HPCI) System, Nuclear Boiler Instrumentation, Reactor Core Isolation Cooling (RCIC) System, Residual Heat Removal (RHR) System and Vacuum Relief Valve System.
3.2.1-32	Steel piping and ducting components and internal surfaces exposed to air – indoor uncontrolled (Internal)	Loss of material due to general corrosion	Inspection of Internal Surfaces in Miscellaneous Piping and Ducting Components	No	Not Applicable. There are no steel piping and ducting components with internal surfaces exposed to indoor air in the Engineered Safety Features systems. AMR methodology assumes internal surfaces are exposed to an Air/Gas – Wetted environment, which includes condensation. AMR methodology predicts pitting and crevice corrosion in addition to general corrosion. See Item Number 3.2.1-34.

Table 3.2.1 Summary of Aging Management Evaluations for the Engineered Safety Features

Item Number	Component	Aging Effect/Mechanism	Aging Management Programs	Further Evaluation Recommended	Discussion
3.2.1-33	Steel encapsulation components exposed to air-indoor uncontrolled (internal)	Loss of material due to general, pitting, and crevice corrosion	Inspection of Internal Surfaces in Miscellaneous Piping and Ducting Components	No	Not Applicable. There are no steel encapsulation components exposed to indoor uncontrolled air in the Engineered Safety Features systems.
3.2.1-34	Steel piping, piping components, and piping elements exposed to condensation (internal)	Loss of material due to general, pitting, and crevice corrosion	Inspection of Internal Surfaces in Miscellaneous Piping and Ducting Components	No	Consistent with NUREG-1801. The Inspection of Internal Surfaces in Miscellaneous Piping and Ducting Components program, B.2.1.26, will be used to manage the loss of material due to general, pitting, and crevice corrosion on steel piping, piping components, piping elements, turbine casing, damper housing, tanks, and fan housings exposed to an air/gas wetted environment in the Containment Hydrogen Recombiner System, Filtration, Recirculation, and Ventilation System, High Pressure Coolant Injection (HPCI) System, Reactor Core Isolation Cooling (RCIC) System, Residual Heat Removal System and Vacuum Relief Valve System.

Table 3.2.1 Summary of Aging Management Evaluations for the Engineered Safety Features

Item Number	Component	Aging Effect/Mechanism	Aging Management Programs	Further Evaluation Recommended	Discussion
3.2.1-35	Steel containment isolation piping and components internal surfaces exposed to raw water	Loss of material due to general, pitting, crevice, and microbiologically-influenced corrosion, and fouling	Open-Cycle Cooling Water System	No	Not Applicable. There are no steel piping and components internal surfaces exposed to raw water in the Engineered Safety Features systems.
3.2.1-36	Steel heat exchanger components exposed to raw water	Loss of material due to general, pitting, crevice, galvanic, and microbiologically-influenced corrosion, and fouling	Open-Cycle Cooling Water System	No	Not Applicable. There are no steel heat exchanger components exposed to raw water in the Engineered Safety Features systems.
3.2.1-37	Stainless steel piping, piping components, and piping elements exposed to raw water	Loss of material due to pitting, crevice, and microbiologically-influenced corrosion	Open-Cycle Cooling Water System	No	Not Applicable. There are no stainless steel piping, piping components, and piping elements exposed to raw water in the Engineered Safety Features systems.

Table 3.2.1 Summary of Aging Management Evaluations for the Engineered Safety Features

Item Number	Component	Aging Effect/Mechanism	Aging Management Programs	Further Evaluation Recommended	Discussion
3.2.1-38	Stainless steel containment isolation piping and components internal surfaces exposed to raw water	Loss of material due to pitting, crevice, and microbiologically-influenced corrosion, and fouling	Open-Cycle Cooling Water System	No	Components in the Equipment and Floor Drainage System and Radwaste System have been aligned to this item based on material, environment and aging effect. The Periodic Inspection program, B.2.2.2, will be substituted to manage loss of material due to pitting, crevice, and microbiologically influenced corrosion, and fouling in stainless steel piping and components and tanks exposed to raw water for these systems. Components in the Fire Protection System have been aligned to this item based on material, environment and aging effect. The Fire Water System program, B.2.1.18, will be substituted to manage loss of material due to pitting, crevice, and microbiologically influenced corrosion, and fouling in stainless steel piping and components exposed to raw water in this system.

Table 3.2.1 Summary of Aging Management Evaluations for the Engineered Safety Features

Item Number	Component	Aging Effect/Mechanism	Aging Management Programs	Further Evaluation Recommended	Discussion
3.2.1-39	Stainless steel heat exchanger components exposed to raw water	Loss of material due to pitting, crevice, and microbiologically-influenced corrosion, and fouling	Open-Cycle Cooling Water System	No	Not Applicable. There are no stainless steel heat exchanger components exposed to raw water in the Engineered Safety Features systems.
3.2.1-40	Steel and stainless steel heat exchanger tubes (serviced by open-cycle cooling water) exposed to raw water	Reduction of heat transfer due to fouling	Open-Cycle Cooling Water System	No	Not Applicable. There are no steel or stainless steel heat exchanger tubes (serviced by open-cycle cooling water) exposed to raw water in the Engineered Safety Features systems.
3.2.1-41	Copper alloy >15% Zn piping, piping components, piping elements, and heat exchanger components exposed to closed cycle cooling water	Loss of material due to selective leaching	Selective Leaching of Materials	No	Not Applicable. There are no copper alloy >15% Zn piping, piping components, piping elements, and heat exchanger components exposed to closed cycle cooling water in the Engineered Safety Features systems.

Table 3.2.1 Summary of Aging Management Evaluations for the Engineered Safety Features

Item Number	Component	Aging Effect/Mechanism	Aging Management Programs	Further Evaluation Recommended	Discussion
3.2.1-42	Gray cast iron piping, piping components, piping elements exposed to closed-cycle cooling water	Loss of material due to selective leaching	Selective Leaching of Materials	No	Not Applicable. There are no gray cast iron piping, piping components, piping elements exposed to closed-cycle cooling water in the Engineered Safety Features systems.
3.2.1-43	Gray cast iron piping, piping components, and piping elements exposed to soil	Loss of material due to selective leaching	Selective Leaching of Materials	No	Not Applicable. There are no gray cast iron piping, piping components, and piping elements exposed to soil in the Engineered Safety Features systems.
3.2.1-44	Gray cast iron motor cooler exposed to treated water	Loss of material due to selective leaching	Selective Leaching of Materials	No	Consistent with NUREG-1801. The Selective Leaching of Materials program, B.2.1.23, will be used to manage loss of material due to selective leaching in gray cast iron components exposed to treated water in the Core Spray System and Residual Heat Removal (RHR) System. There are no gray cast iron motor coolers exposed to treated water in the Engineered Safety Features systems. However, the Engineered Safety Features systems contain a gray cast iron pump casing and site glass that are exposed to treated water.
3.2.1-45	PWR Only				

Table 3.2.1 Summary of Aging Management Evaluations for the Engineered Safety Features

Item Number	Component	Aging Effect/Mechanism	Aging Management Programs	Further Evaluation Recommended	Discussion
3.2.1-46	PWR Only				
3.2.1-47	PWR Only				
3.2.1-48	PWR Only				
3.2.1-49	PWR Only				
3.2.1-50	Aluminum piping, piping components, and piping elements exposed to air- indoor uncontrolled (internal/external)	None	None	NA - No AEM or AMP	Consistent with NUREG-1801.
3.2.1-51	Galvanized steel ducting exposed to air – indoor controlled (external)	None	None	NA - No AEM or AMP	Not Applicable. There is no galvanized steel ducting exposed to controlled indoor air at Hope Creek. All indoor air environments at Hope Creek are assumed to be uncontrolled for license renewal.
3.2.1-52	Glass piping elements exposed to air – indoor uncontrolled (external), lubricating oil, raw water, treated water, or treated borated water	None	None	NA - No AEM or AMP	Consistent with NUREG-1801.

Table 3.2.1 Summary of Aging Management Evaluations for the Engineered Safety Features

Item Number	Component	Aging Effect/Mechanism	Aging Management Programs	Further Evaluation Recommended	Discussion
3.2.1-53	Stainless steel, copper alloy, and nickel alloy piping, piping components, and piping elements exposed to air – indoor uncontrolled (external)	None	None	NA - No AEM or AMP	Consistent with NUREG-1801.
3.2.1-54	Steel piping, piping components, and piping elements exposed to air – indoor controlled (external)	None	None	NA - No AEM or AMP	Not Applicable. There are no steel piping, piping components, and piping elements exposed to indoor controlled air at Hope Creek. All indoor air environments at Hope Creek are assumed to be uncontrolled for license renewal.
3.2.1-55	Steel and stainless steel piping, piping components, and piping elements in concrete	None	None	NA - No AEM or AMP	Not Applicable. There are no Steel and stainless steel piping, piping components, and piping elements in concrete in the Engineered Safety Features systems.
3.2.1-56	Steel, stainless steel, and copper alloy piping, piping components, and piping elements exposed to gas	None	None	NA - No AEM or AMP	Consistent with NUREG-1801.
3.2.1-57	PWR Only				

Table 3.2.2-1
Containment Hydrogen Recombiner System
Summary of Aging Management Evaluation

Table 3.2.2-1 Containment Hydrogen Recombiner System

Component Type	Intended Function	Material	Environment	Aging Effect Requiring Management	Aging Management Programs	NUREG-1801 Vol. 2 Item	Table 1 Item	Notes
Bolting	Mechanical Closure	Carbon and Low Alloy Steel Bolting	Air - Indoor (External)	Loss of Material/General, Pitting and Crevice Corrosion	Bolting Integrity	V.E-4	3.2.1-23	B
Bolting	Mechanical Closure	Carbon and Low Alloy Steel Bolting	Air - Indoor (External)	Loss of Preload/Thermal Effects, Gasket Creep, and Self-Loosening	Bolting Integrity	V.E-5	3.2.1-24	B
Eductor	Pressure Boundary	Stainless Steel	Air - Indoor (External)	None	None	V.F-12	3.2.1-53	A
Eductor	Pressure Boundary	Stainless Steel	Air/Gas - Wetted (Internal)	Loss of Material/Pitting and Crevice Corrosion	Periodic Inspection	V.D2-35	3.2.1-8	E, 1
Eductor	Pressure Boundary	Stainless Steel	Treated Water (Internal)	Loss of Material/Pitting and Crevice Corrosion	One-Time Inspection	V.D2-28	3.2.1-5	A
Eductor	Pressure Boundary	Stainless Steel	Treated Water (Internal)	Loss of Material/Pitting and Crevice Corrosion	Water Chemistry	V.D2-28	3.2.1-5	B
Fan Housing	Pressure Boundary	Carbon Steel	Air - Indoor (External)	Loss of Material/General Corrosion	External Surfaces Monitoring	V.D2-2	3.2.1-31	A
Fan Housing	Pressure Boundary	Carbon Steel	Air/Gas - Wetted (Internal)	Loss of Material/General, Pitting and Crevice Corrosion	Inspection of Internal Surfaces in Miscellaneous Piping and Ducting Components	V.D2-17	3.2.1-34	C
Flow Element	Pressure Boundary	Stainless Steel	Air - Indoor (External)	None	None	V.F-12	3.2.1-53	A
Flow Element	Pressure Boundary	Stainless Steel	Air/Gas - Wetted (Internal)	Loss of Material/Pitting and Crevice Corrosion	Periodic Inspection	V.D2-35	3.2.1-8	E, 1
Piping and Fittings	Pressure Boundary	Carbon Steel	Air - Indoor (External)	Loss of Material/General Corrosion	External Surfaces Monitoring	V.D2-2	3.2.1-31	A
Piping and Fittings	Pressure Boundary	Carbon Steel	Air/Gas - Wetted (Internal)	Loss of Material/General, Pitting and Crevice Corrosion	Inspection of Internal Surfaces in Miscellaneous Piping and Ducting Components	V.D2-17	3.2.1-34	A

Table 3.2.2-1 Containment Hydrogen Recombiner System (Continued)

Component Type	Intended Function	Material	Environment	Aging Effect Requiring Management	Aging Management Programs	NUREG-1801 Vol. 2 Item	Table 1 Item	Notes
Piping and Fittings	Pressure Boundary	Carbon Steel	Treated Water (Internal)	Loss of Material/Galvanic Corrosion	One-Time Inspection	VIII.E-7	3.4.1-5	C
Piping and Fittings	Pressure Boundary	Carbon Steel	Treated Water (Internal)	Loss of Material/Galvanic Corrosion	Water Chemistry	VIII.E-7	3.4.1-5	D
Piping and Fittings	Pressure Boundary	Carbon Steel	Treated Water (Internal)	Loss of Material/General, Pitting and Crevice Corrosion	One-Time Inspection	V.D2-33	3.2.1-14	A
Piping and Fittings	Pressure Boundary	Carbon Steel	Treated Water (Internal)	Loss of Material/General, Pitting and Crevice Corrosion	Water Chemistry	V.D2-33	3.2.1-14	B
Piping and Fittings	Pressure Boundary	Stainless Steel	Air - Indoor (External)	None	None	V.F-12	3.2.1-53	A
Piping and Fittings	Pressure Boundary	Stainless Steel	Air/Gas - Wetted (Internal)	Loss of Material/Pitting and Crevice Corrosion	Periodic Inspection	V.D2-35	3.2.1-8	E, 1
Piping and Fittings	Pressure Boundary	Stainless Steel	Treated Water (Internal)	Loss of Material/Pitting and Crevice Corrosion	One-Time Inspection	V.D2-28	3.2.1-5	A
Piping and Fittings	Pressure Boundary	Stainless Steel	Treated Water (Internal)	Loss of Material/Pitting and Crevice Corrosion	Water Chemistry	V.D2-28	3.2.1-5	B
Spray Nozzles	Pressure Boundary	Stainless Steel	Air/Gas - Wetted (Internal)	Loss of Material/Pitting and Crevice Corrosion	Periodic Inspection	V.D2-35	3.2.1-8	E, 1
Spray Nozzles	Pressure Boundary	Stainless Steel	Air/Gas Wetted (External)	Loss of Material/Pitting and Crevice Corrosion	Periodic Inspection	V.D2-35	3.2.1-8	E, 1
Spray Nozzles	Spray	Stainless Steel	Air/Gas - Wetted (Internal)	Loss of Material/Pitting and Crevice Corrosion	Periodic Inspection	V.D2-35	3.2.1-8	E, 1
Spray Nozzles	Spray	Stainless Steel	Air/Gas Wetted (External)	Loss of Material/Pitting and Crevice Corrosion	Periodic Inspection	V.D2-35	3.2.1-8	E, 1
Strainer Body	Pressure Boundary	Stainless Steel	Air - Indoor (External)	None	None	V.F-12	3.2.1-53	A
Strainer Body	Pressure Boundary	Stainless Steel	Treated Water (Internal)	Loss of Material/Pitting and Crevice Corrosion	One-Time Inspection	V.D2-28	3.2.1-5	A
Strainer Body	Pressure Boundary	Stainless Steel	Treated Water (Internal)	Loss of Material/Pitting and Crevice Corrosion	Water Chemistry	V.D2-28	3.2.1-5	B
Tanks (Reaction Chamber)	Pressure Boundary	Stainless Steel	Air - Indoor (External)	None	None	V.F-12	3.2.1-53	C

Table 3.2.2-1 Containment Hydrogen Recombiner System (Continued)

Component Type	Intended Function	Material	Environment	Aging Effect Requiring Management	Aging Management Programs	NUREG-1801 Vol. 2 Item	Table 1 Item	Notes
Tanks (Reaction Chamber)	Pressure Boundary	Stainless Steel	Air/Gas - Wetted (Internal)	Loss of Material/Pitting and Crevice Corrosion	Periodic Inspection	V.D2-35	3.2.1-8	E, 1
Tanks (Water Separator)	Pressure Boundary	Stainless Steel	Air - Indoor (External)	None	None	V.F-12	3.2.1-53	C
Tanks (Water Separator)	Pressure Boundary	Stainless Steel	Air/Gas - Wetted (Internal)	Loss of Material/Pitting and Crevice Corrosion	Periodic Inspection	V.D2-35	3.2.1-8	E, 1
Tanks (Water Separator)	Pressure Boundary	Stainless Steel	Treated Water (Internal)	Loss of Material/Pitting and Crevice Corrosion	One-Time Inspection	V.D2-28	3.2.1-5	C
Tanks (Water Separator)	Pressure Boundary	Stainless Steel	Treated Water (Internal)	Loss of Material/Pitting and Crevice Corrosion	Water Chemistry	V.D2-28	3.2.1-5	D
Thermowell	Pressure Boundary	Stainless Steel	Air - Indoor (External)	None	None	V.F-12	3.2.1-53	A
Thermowell	Pressure Boundary	Stainless Steel	Air/Gas - Wetted (Internal)	Loss of Material/Pitting and Crevice Corrosion	Periodic Inspection	V.D2-35	3.2.1-8	E, 1
Valve Body	Pressure Boundary	Carbon Steel	Air - Indoor (External)	Loss of Material/General Corrosion	External Surfaces Monitoring	V.D2-2	3.2.1-31	A
Valve Body	Pressure Boundary	Carbon Steel	Air/Gas - Wetted (Internal)	Loss of Material/General, Pitting and Crevice Corrosion	Inspection of Internal Surfaces in Miscellaneous Piping and Ducting Components	V.D2-17	3.2.1-34	A
Valve Body	Pressure Boundary	Carbon Steel	Treated Water (Internal)	Loss of Material/General, Pitting and Crevice Corrosion	One-Time Inspection	V.D2-33	3.2.1-14	A
Valve Body	Pressure Boundary	Carbon Steel	Treated Water (Internal)	Loss of Material/General, Pitting and Crevice Corrosion	Water Chemistry	V.D2-33	3.2.1-14	B
Valve Body	Pressure Boundary	Stainless Steel	Air - Indoor (External)	None	None	V.F-12	3.2.1-53	A
Valve Body	Pressure Boundary	Stainless Steel	Air/Gas - Wetted (Internal)	Loss of Material/Pitting and Crevice Corrosion	Periodic Inspection	V.D2-35	3.2.1-8	E, 1
Valve Body	Pressure Boundary	Stainless Steel	Treated Water (Internal)	Loss of Material/Pitting and Crevice Corrosion	One-Time Inspection	V.D2-28	3.2.1-5	A
Valve Body	Pressure Boundary	Stainless Steel	Treated Water (Internal)	Loss of Material/Pitting and Crevice Corrosion	Water Chemistry	V.D2-28	3.2.1-5	B

Notes	Definition of Note
A	Consistent with NUREG-1801 item for component, material, environment, and aging effect. AMP is consistent with NUREG-1801 AMP.
B	Consistent with NUREG-1801 item for component, material, environment, and aging effect. AMP takes some exceptions to NUREG-1801 AMP.
C	Component is different, but consistent with NUREG-1801 item for material, environment, and aging effect. AMP is consistent with NUREG-1801 AMP.
D	Component is different, but consistent with NUREG-1801 item for material, environment, and aging effect. AMP takes some exceptions to NUREG-1801 AMP.
E	Consistent with NUREG-1801 item for material, environment and aging effect, but a different aging management program is credited or NUREG-1801 identifies a plant-specific aging management program.
F	Material not in NUREG-1801 for this component.
G	Environment not in NUREG-1801 for this component and material.
H	Aging effect not in NUREG-1801 for this component, material and environment combination.
I	Aging effect in NUREG-1801 for this component, material and environment combination is not applicable.
J	Neither the component nor the material and environment combination is evaluated in NUREG-1801.

Plant Specific Notes:

1. NUREG-1801 specifies a plant-specific program. The Periodic Inspection program is used to manage the aging effect(s) applicable to this component type, material, and environment combination.

Table 3.2.2-2
Core Spray System
Summary of Aging Management Evaluation

Table 3.2.2-2 Core Spray System

Component Type	Intended Function	Material	Environment	Aging Effect Requiring Management	Aging Management Programs	NUREG-1801 Vol. 2 Item	Table 1 Item	Notes
Bolting	Mechanical Closure	Carbon and Low Alloy Steel Bolting	Air - Indoor (External)	Loss of Material/General, Pitting and Crevice Corrosion	Bolting Integrity	V.E-4	3.2.1-23	B
Bolting	Mechanical Closure	Carbon and Low Alloy Steel Bolting	Air - Indoor (External)	Loss of Preload/Thermal Effects, Gasket Creep, and Self-Loosening	Bolting Integrity	V.E-5	3.2.1-24	B
Bolting	Mechanical Closure	Stainless Steel Bolting	Treated Water (External)	Loss of Material/Pitting and Crevice Corrosion	Bolting Integrity			G, 1
Bolting	Mechanical Closure	Stainless Steel Bolting	Treated Water (External)	Loss of Preload/Thermal Effects, Gasket Creep, and Self-Loosening	Bolting Integrity			G, 1
Bolting (Class 1)	Mechanical Closure	Carbon and Low Alloy Steel Bolting	Air - Indoor (External)	Cumulative Fatigue Damage/Fatigue	TLAA	IV.C1-11	3.1.1-4	A, 2
Bolting (Class 1)	Mechanical Closure	Carbon and Low Alloy Steel Bolting	Air - Indoor (External)	Loss of Material/General, Pitting and Crevice Corrosion	Bolting Integrity	V.E-4	3.2.1-23	B
Bolting (Class 1)	Mechanical Closure	Carbon and Low Alloy Steel Bolting	Air - Indoor (External)	Loss of Preload/Thermal Effects, Gasket Creep, and Self-Loosening	Bolting Integrity	IV.C1-10	3.1.1-52	B
Class 1 Piping, Fittings and Branch Connections < NPS 4"	Pressure Boundary	Carbon Steel	Air - Indoor (External)	Loss of Material/General Corrosion	External Surfaces Monitoring	V.E-7	3.2.1-31	A
Class 1 Piping, Fittings and Branch Connections < NPS 4"	Pressure Boundary	Carbon Steel	Treated Water (Internal)	Cracking/Thermal and Mechanical Loading	ASME Section XI Inservice Inspection, Subsections IWB, IWC, and IWD	IV.C1-1	3.1.1-48	A

Table 3.2.2-2 Core Spray System (Continued)

Component Type	Intended Function	Material	Environment	Aging Effect Requiring Management	Aging Management Programs	NUREG-1801 Vol. 2 Item	Table 1 Item	Notes
Class 1 Piping, Fittings and Branch Connections < NPS 4"	Pressure Boundary	Carbon Steel	Treated Water (Internal)	Cracking/Thermal and Mechanical Loading	Small-Bore Class 1 Piping Inspection	IV.C1-1	3.1.1-48	E, 3
Class 1 Piping, Fittings and Branch Connections < NPS 4"	Pressure Boundary	Carbon Steel	Treated Water (Internal)	Cracking/Thermal and Mechanical Loading	Water Chemistry	IV.C1-1	3.1.1-48	B
Class 1 Piping, Fittings and Branch Connections < NPS 4"	Pressure Boundary	Carbon Steel	Treated Water (Internal)	Cumulative Fatigue Damage/Fatigue	TLAA	IV.C1-15	3.1.1-3	A, 2
Class 1 Piping, Fittings and Branch Connections < NPS 4"	Pressure Boundary	Carbon Steel	Treated Water (Internal)	Loss of Material/Galvanic Corrosion	One-Time Inspection	VIII.E-7	3.4.1-5	C
Class 1 Piping, Fittings and Branch Connections < NPS 4"	Pressure Boundary	Carbon Steel	Treated Water (Internal)	Loss of Material/Galvanic Corrosion	Water Chemistry	VIII.E-7	3.4.1-5	D
Class 1 Piping, Fittings and Branch Connections < NPS 4"	Pressure Boundary	Carbon Steel	Treated Water (Internal)	Loss of Material/General, Pitting and Crevice Corrosion	One-Time Inspection	IV.C1-6	3.1.1-13	C
Class 1 Piping, Fittings and Branch Connections < NPS 4"	Pressure Boundary	Carbon Steel	Treated Water (Internal)	Loss of Material/General, Pitting and Crevice Corrosion	Water Chemistry	IV.C1-6	3.1.1-13	D
Class 1 Piping, Fittings and Branch Connections < NPS 4"	Pressure Boundary	Stainless Steel	Air - Indoor (External)	None	None	IV.E-2	3.1.1-86	A
Class 1 Piping, Fittings and Branch Connections < NPS 4"	Pressure Boundary	Stainless Steel	Treated Water (Internal) > 140 F	Cracking/Stress Corrosion Cracking, Thermal and Mechanical Loading	ASME Section XI Inservice Inspection, Subsections IWB, IWC, and IWD	IV.C1-1	3.1.1-48	A

Table 3.2.2-2 Core Spray System (Continued)

Component Type	Intended Function	Material	Environment	Aging Effect Requiring Management	Aging Management Programs	NUREG-1801 Vol. 2 Item	Table 1 Item	Notes
Class 1 Piping, Fittings and Branch Connections < NPS 4"	Pressure Boundary	Stainless Steel	Treated Water (Internal) > 140 F	Cracking/Stress Corrosion Cracking, Thermal and Mechanical Loading	Small-Bore Class 1 Piping Inspection	IV.C1-1	3.1.1-48	E, 3
Class 1 Piping, Fittings and Branch Connections < NPS 4"	Pressure Boundary	Stainless Steel	Treated Water (Internal) > 140 F	Cracking/Stress Corrosion Cracking, Thermal and Mechanical Loading	Water Chemistry	IV.C1-1	3.1.1-48	B
Class 1 Piping, Fittings and Branch Connections < NPS 4"	Pressure Boundary	Stainless Steel	Treated Water (Internal) > 140 F	Cumulative Fatigue Damage/Fatigue	TLAA	IV.C1-15	3.1.1-3	A, 2
Class 1 Piping, Fittings and Branch Connections < NPS 4"	Pressure Boundary	Stainless Steel	Treated Water (Internal) > 140 F	Loss of Material/Pitting and Crevice Corrosion	One-Time Inspection	IV.C1-14	3.1.1-15	A
Class 1 Piping, Fittings and Branch Connections < NPS 4"	Pressure Boundary	Stainless Steel	Treated Water (Internal) > 140 F	Loss of Material/Pitting and Crevice Corrosion	Water Chemistry	IV.C1-14	3.1.1-15	B
Cyclone Separator (on Core Spray pump)	Pressure Boundary	Stainless Steel	Air - Indoor (External)	None	None	V.F-12	3.2.1-53	A
Cyclone Separator (on Core Spray pump)	Pressure Boundary	Stainless Steel	Treated Water (Internal)	Loss of Material/Pitting and Crevice Corrosion	One-Time Inspection	V.D2-28	3.2.1-5	A
Cyclone Separator (on Core Spray pump)	Pressure Boundary	Stainless Steel	Treated Water (Internal)	Loss of Material/Pitting and Crevice Corrosion	Water Chemistry	V.D2-28	3.2.1-5	B
Flow Element	Pressure Boundary	Stainless Steel	Air - Indoor (External)	None	None	V.F-12	3.2.1-53	A
Flow Element	Pressure Boundary	Stainless Steel	Treated Water (Internal)	Loss of Material/Pitting and Crevice Corrosion	One-Time Inspection	V.D2-28	3.2.1-5	A
Flow Element	Pressure Boundary	Stainless Steel	Treated Water (Internal)	Loss of Material/Pitting and Crevice Corrosion	Water Chemistry	V.D2-28	3.2.1-5	B

Table 3.2.2-2 Core Spray System (Continued)

Component Type	Intended Function	Material	Environment	Aging Effect Requiring Management	Aging Management Programs	NUREG-1801 Vol. 2 Item	Table 1 Item	Notes
Piping and Fittings	Leakage Boundary	Carbon Steel	Air - Indoor (External)	Loss of Material/General Corrosion	External Surfaces Monitoring	V.E-7	3.2.1-31	A
Piping and Fittings	Leakage Boundary	Carbon Steel	Treated Water (Internal)	Loss of Material/Galvanic Corrosion	One-Time Inspection	VIII.E-7	3.4.1-5	C
Piping and Fittings	Leakage Boundary	Carbon Steel	Treated Water (Internal)	Loss of Material/Galvanic Corrosion	Water Chemistry	VIII.E-7	3.4.1-5	D
Piping and Fittings	Leakage Boundary	Carbon Steel	Treated Water (Internal)	Loss of Material/General, Pitting and Crevice Corrosion	One-Time Inspection	V.D2-33	3.2.1-14	A
Piping and Fittings	Leakage Boundary	Carbon Steel	Treated Water (Internal)	Loss of Material/General, Pitting and Crevice Corrosion	Water Chemistry	V.D2-33	3.2.1-14	B
Piping and Fittings	Leakage Boundary	Stainless Steel	Air - Indoor (External)	None	None	V.F-12	3.2.1-53	A
Piping and Fittings	Leakage Boundary	Stainless Steel	Treated Water (Internal)	Loss of Material/Pitting and Crevice Corrosion	One-Time Inspection	V.D2-28	3.2.1-5	A
Piping and Fittings	Leakage Boundary	Stainless Steel	Treated Water (Internal)	Loss of Material/Pitting and Crevice Corrosion	Water Chemistry	V.D2-28	3.2.1-5	B
Piping and Fittings	Pressure Boundary	Carbon Steel	Air - Indoor (External)	Loss of Material/General Corrosion	External Surfaces Monitoring	V.E-7	3.2.1-31	A
Piping and Fittings	Pressure Boundary	Carbon Steel	Treated Water (External)	Loss of Material/General, Pitting and Crevice Corrosion	One-Time Inspection	V.D2-33	3.2.1-14	A
Piping and Fittings	Pressure Boundary	Carbon Steel	Treated Water (External)	Loss of Material/General, Pitting and Crevice Corrosion	Water Chemistry	V.D2-33	3.2.1-14	B
Piping and Fittings	Pressure Boundary	Carbon Steel	Treated Water (Internal)	Loss of Material/Galvanic Corrosion	One-Time Inspection	VIII.E-7	3.4.1-5	C
Piping and Fittings	Pressure Boundary	Carbon Steel	Treated Water (Internal)	Loss of Material/Galvanic Corrosion	Water Chemistry	VIII.E-7	3.4.1-5	D
Piping and Fittings	Pressure Boundary	Carbon Steel	Treated Water (Internal)	Loss of Material/General, Pitting and Crevice Corrosion	One-Time Inspection	V.D2-33	3.2.1-14	A

Table 3.2.2-2 Core Spray System (Continued)

Component Type	Intended Function	Material	Environment	Aging Effect Requiring Management	Aging Management Programs	NUREG-1801 Vol. 2 Item	Table 1 Item	Notes
Piping and Fittings	Pressure Boundary	Carbon Steel	Treated Water (Internal)	Loss of Material/General, Pitting and Crevice Corrosion	Water Chemistry	V.D2-33	3.2.1-14	B
Piping and Fittings	Pressure Boundary	Stainless Steel	Air - Indoor (External)	None	None	V.F-12	3.2.1-53	A
Piping and Fittings	Pressure Boundary	Stainless Steel	Treated Water (External)	Loss of Material/Pitting and Crevice Corrosion	One-Time Inspection	V.D2-28	3.2.1-5	A
Piping and Fittings	Pressure Boundary	Stainless Steel	Treated Water (External)	Loss of Material/Pitting and Crevice Corrosion	Water Chemistry	V.D2-28	3.2.1-5	B
Piping and Fittings	Pressure Boundary	Stainless Steel	Treated Water (Internal)	Loss of Material/Pitting and Crevice Corrosion	One-Time Inspection	V.D2-28	3.2.1-5	A
Piping and Fittings	Pressure Boundary	Stainless Steel	Treated Water (Internal)	Loss of Material/Pitting and Crevice Corrosion	Water Chemistry	V.D2-28	3.2.1-5	B
Piping and Fittings (Class 1)	Pressure Boundary	Carbon Steel	Air - Indoor (External)	Loss of Material/General Corrosion	External Surfaces Monitoring	V.E-7	3.2.1-31	A
Piping and Fittings (Class 1)	Pressure Boundary	Carbon Steel	Treated Water (Internal)	Cumulative Fatigue Damage/Fatigue	TLAA	IV.C1-15	3.1.1-3	A, 2
Piping and Fittings (Class 1)	Pressure Boundary	Carbon Steel	Treated Water (Internal)	Loss of Material/General, Pitting and Crevice Corrosion	One-Time Inspection	IV.C1-6	3.1.1-13	C
Piping and Fittings (Class 1)	Pressure Boundary	Carbon Steel	Treated Water (Internal)	Loss of Material/General, Pitting and Crevice Corrosion	Water Chemistry	IV.C1-6	3.1.1-13	D
Pump Casing (Core Spray)	Pressure Boundary	Gray Cast Iron	Air - Indoor (External)	Loss of Material/General Corrosion	External Surfaces Monitoring	V.E-7	3.2.1-31	A
Pump Casing (Core Spray)	Pressure Boundary	Gray Cast Iron	Treated Water (Internal)	Loss of Material/General, Pitting and Crevice Corrosion	One-Time Inspection	V.D2-33	3.2.1-14	A
Pump Casing (Core Spray)	Pressure Boundary	Gray Cast Iron	Treated Water (Internal)	Loss of Material/General, Pitting and Crevice Corrosion	Water Chemistry	V.D2-33	3.2.1-14	B
Pump Casing (Core Spray)	Pressure Boundary	Gray Cast Iron	Treated Water (Internal)	Loss of Material/Selective Leaching	Selective Leaching of Materials	V.A-18	3.2.1-44	C
Restricting Orifices	Pressure Boundary	Stainless Steel	Air - Indoor (External)	None	None	V.F-12	3.2.1-53	A

Table 3.2.2-2 Core Spray System (Continued)

Component Type	Intended Function	Material	Environment	Aging Effect Requiring Management	Aging Management Programs	NUREG-1801 Vol. 2 Item	Table 1 Item	Notes
Restricting Orifices	Pressure Boundary	Stainless Steel	Treated Water (Internal)	Loss of Material/Pitting and Crevice Corrosion	One-Time Inspection	V.D2-28	3.2.1-5	A
Restricting Orifices	Pressure Boundary	Stainless Steel	Treated Water (Internal)	Loss of Material/Pitting and Crevice Corrosion	Water Chemistry	V.D2-28	3.2.1-5	B
Restricting Orifices	Throttle	Stainless Steel	Air - Indoor (External)	None	None	V.F-12	3.2.1-53	A
Restricting Orifices	Throttle	Stainless Steel	Treated Water (Internal)	Loss of Material/Pitting and Crevice Corrosion	One-Time Inspection	V.D2-28	3.2.1-5	A
Restricting Orifices	Throttle	Stainless Steel	Treated Water (Internal)	Loss of Material/Pitting and Crevice Corrosion	Water Chemistry	V.D2-28	3.2.1-5	B
Restricting Orifices (Class 1)	Pressure Boundary	Stainless Steel	Air - Indoor (External)	None	None	IV.E-2	3.1.1-86	A
Restricting Orifices (Class 1)	Pressure Boundary	Stainless Steel	Treated Water (Internal) > 140 F	Cracking/Stress Corrosion Cracking	ASME Section XI Inservice Inspection, Subsections IWB, IWC, and IWD	IV.C1-1	3.1.1-48	E, 4
Restricting Orifices (Class 1)	Pressure Boundary	Stainless Steel	Treated Water (Internal) > 140 F	Cracking/Stress Corrosion Cracking	Water Chemistry	IV.C1-1	3.1.1-48	E, 4
Restricting Orifices (Class 1)	Pressure Boundary	Stainless Steel	Treated Water (Internal) > 140 F	Loss of Material/Pitting and Crevice Corrosion	One-Time Inspection	IV.C1-14	3.1.1-15	A
Restricting Orifices (Class 1)	Pressure Boundary	Stainless Steel	Treated Water (Internal) > 140 F	Loss of Material/Pitting and Crevice Corrosion	Water Chemistry	IV.C1-14	3.1.1-15	B
Restricting Orifices (Class 1)	Throttle	Stainless Steel	Air - Indoor (External)	None	None	IV.E-2	3.1.1-86	A
Restricting Orifices (Class 1)	Throttle	Stainless Steel	Treated Water (Internal) > 140 F	Cracking/Stress Corrosion Cracking	ASME Section XI Inservice Inspection, Subsections IWB, IWC, and IWD	IV.C1-1	3.1.1-48	E, 4
Restricting Orifices (Class 1)	Throttle	Stainless Steel	Treated Water (Internal) > 140 F	Cracking/Stress Corrosion Cracking	Water Chemistry	IV.C1-1	3.1.1-48	E, 4
Restricting Orifices (Class 1)	Throttle	Stainless Steel	Treated Water (Internal) > 140 F	Loss of Material/Pitting and Crevice Corrosion	One-Time Inspection	IV.C1-14	3.1.1-15	A
Restricting Orifices (Class 1)	Throttle	Stainless Steel	Treated Water (Internal) > 140 F	Loss of Material/Pitting and Crevice Corrosion	Water Chemistry	IV.C1-14	3.1.1-15	B

Table 3.2.2-2 Core Spray System (Continued)

Component Type	Intended Function	Material	Environment	Aging Effect Requiring Management	Aging Management Programs	NUREG-1801 Vol. 2 Item	Table 1 Item	Notes
Strainer	Filter	Stainless Steel	Treated Water (External)	Loss of Material/Pitting and Crevice Corrosion	One-Time Inspection	V.D2-28	3.2.1-5	A
Strainer	Filter	Stainless Steel	Treated Water (External)	Loss of Material/Pitting and Crevice Corrosion	Water Chemistry	V.D2-28	3.2.1-5	B
Strainer	Filter	Stainless Steel	Treated Water (Internal)	Loss of Material/Pitting and Crevice Corrosion	One-Time Inspection	V.D2-28	3.2.1-5	A
Strainer	Filter	Stainless Steel	Treated Water (Internal)	Loss of Material/Pitting and Crevice Corrosion	Water Chemistry	V.D2-28	3.2.1-5	B
Strainer	Pressure Boundary	Stainless Steel	Treated Water (External)	Loss of Material/Pitting and Crevice Corrosion	One-Time Inspection	V.D2-28	3.2.1-5	A
Strainer	Pressure Boundary	Stainless Steel	Treated Water (External)	Loss of Material/Pitting and Crevice Corrosion	Water Chemistry	V.D2-28	3.2.1-5	B
Strainer	Pressure Boundary	Stainless Steel	Treated Water (Internal)	Loss of Material/Pitting and Crevice Corrosion	One-Time Inspection	V.D2-28	3.2.1-5	A
Strainer	Pressure Boundary	Stainless Steel	Treated Water (Internal)	Loss of Material/Pitting and Crevice Corrosion	Water Chemistry	V.D2-28	3.2.1-5	B
Valve Body	Leakage Boundary	Carbon Steel	Air - Indoor (External)	Loss of Material/General Corrosion	External Surfaces Monitoring	V.E-7	3.2.1-31	A
Valve Body	Leakage Boundary	Carbon Steel	Treated Water (Internal)	Loss of Material/General, Pitting and Crevice Corrosion	One-Time Inspection	V.D2-33	3.2.1-14	A
Valve Body	Leakage Boundary	Carbon Steel	Treated Water (Internal)	Loss of Material/General, Pitting and Crevice Corrosion	Water Chemistry	V.D2-33	3.2.1-14	B
Valve Body	Leakage Boundary	Stainless Steel	Air - Indoor (External)	None	None	V.F-12	3.2.1-53	A
Valve Body	Leakage Boundary	Stainless Steel	Treated Water (Internal)	Loss of Material/Pitting and Crevice Corrosion	One-Time Inspection	V.D2-28	3.2.1-5	A
Valve Body	Leakage Boundary	Stainless Steel	Treated Water (Internal)	Loss of Material/Pitting and Crevice Corrosion	Water Chemistry	V.D2-28	3.2.1-5	B
Valve Body	Pressure Boundary	Carbon Steel	Air - Indoor (External)	Loss of Material/General Corrosion	External Surfaces Monitoring	V.E-7	3.2.1-31	A

Table 3.2.2-2 Core Spray System (Continued)

Component Type	Intended Function	Material	Environment	Aging Effect Requiring Management	Aging Management Programs	NUREG-1801 Vol. 2 Item	Table 1 Item	Notes
Valve Body	Pressure Boundary	Carbon Steel	Treated Water (Internal)	Loss of Material/General, Pitting and Crevice Corrosion	One-Time Inspection	V.D2-33	3.2.1-14	A
Valve Body	Pressure Boundary	Carbon Steel	Treated Water (Internal)	Loss of Material/General, Pitting and Crevice Corrosion	Water Chemistry	V.D2-33	3.2.1-14	B
Valve Body	Pressure Boundary	Stainless Steel	Air - Indoor (External)	None	None	V.F-12	3.2.1-53	A
Valve Body	Pressure Boundary	Stainless Steel	Treated Water (Internal)	Loss of Material/Pitting and Crevice Corrosion	One-Time Inspection	V.D2-28	3.2.1-5	A
Valve Body	Pressure Boundary	Stainless Steel	Treated Water (Internal)	Loss of Material/Pitting and Crevice Corrosion	Water Chemistry	V.D2-28	3.2.1-5	B
Valve Body (Class 1)	Pressure Boundary	Carbon Steel	Air - Indoor (External)	Loss of Material/General Corrosion	External Surfaces Monitoring	V.E-7	3.2.1-31	A
Valve Body (Class 1)	Pressure Boundary	Carbon Steel	Treated Water (Internal)	Cumulative Fatigue Damage/Fatigue	TLAA	IV.C1-15	3.1.1-3	A, 2
Valve Body (Class 1)	Pressure Boundary	Carbon Steel	Treated Water (Internal)	Loss of Material/General, Pitting and Crevice Corrosion	One-Time Inspection	IV.C1-6	3.1.1-13	C
Valve Body (Class 1)	Pressure Boundary	Carbon Steel	Treated Water (Internal)	Loss of Material/General, Pitting and Crevice Corrosion	Water Chemistry	IV.C1-6	3.1.1-13	D
Valve Body (Class 1)	Pressure Boundary	Stainless Steel	Air - Indoor (External)	None	None	IV.E-2	3.1.1-86	A
Valve Body (Class 1)	Pressure Boundary	Stainless Steel	Treated Water (Internal)	Loss of Material/Pitting and Crevice Corrosion	One-Time Inspection	IV.C1-14	3.1.1-15	A
Valve Body (Class 1)	Pressure Boundary	Stainless Steel	Treated Water (Internal)	Loss of Material/Pitting and Crevice Corrosion	Water Chemistry	IV.C1-14	3.1.1-15	B

Notes	Definition of Note
A	Consistent with NUREG-1801 item for component, material, environment, and aging effect. AMP is consistent with NUREG-1801 AMP.
B	Consistent with NUREG-1801 item for component, material, environment, and aging effect. AMP takes some exceptions to NUREG-1801 AMP.
C	Component is different, but consistent with NUREG-1801 item for material, environment, and aging effect. AMP is consistent with NUREG-1801 AMP.
D	Component is different, but consistent with NUREG-1801 item for material, environment, and aging effect. AMP takes some exceptions to NUREG-1801 AMP.
E	Consistent with NUREG-1801 item for material, environment and aging effect, but a different aging management program is credited or NUREG-1801 identifies a plant-specific aging management program.
F	Material not in NUREG-1801 for this component.
G	Environment not in NUREG-1801 for this component and material.
H	Aging effect not in NUREG-1801 for this component, material and environment combination.
I	Aging effect in NUREG-1801 for this component, material and environment combination is not applicable.
J	Neither the component nor the material and environment combination is evaluated in NUREG-1801.

Plant Specific Notes:

1. The aging effects for closure bolting in a treated water environment include loss of material and loss of preload. Loss of preload is managed through the Bolting Integrity aging management program. Loss of material for bolting in a submerged environment is managed in conjunction with the Water Chemistry and One Time Inspection aging management programs.

2. The TLAA designation in the Aging Management Program column indicates fatigue of this component is evaluated in Section 4.3.

3. The NUREG-1801 "One-Time Inspection of ASME Code Class 1 Small-Bore Piping" aging management program is applicable only to plants that have not experienced cracking of ASME Code Class 1 small-bore piping. Based on previous Hope Creek operating experience with Class 1 small-bore pipe cracking, a new plant-specific periodic inspection program will be used. The "Small-Bore Class 1 Piping Inspection" aging management program is a plant-specific periodic program that will be implemented to manage cracking by periodic volumetric examinations of small-bore Class 1 piping.

4. The Water Chemistry and ASME Section XI In-service Inspection, Subsections IWB, IWC, and IWD aging management programs will be used to manage the aging effect of cracking in restricting orifices and valve bodies < NPS 4".

Table 3.2.2-3
Filtration, Recirculation, and Ventilation System
Summary of Aging Management Evaluation

Table 3.2.2-3 Filtration, Recirculation, and Ventilation System

Component Type	Intended Function	Material	Environment	Aging Effect Requiring Management	Aging Management Programs	NUREG-1801 Vol. 2 Item	Table 1 Item	Notes
Bird Screen	Filter	Carbon Steel	Air - Outdoor (External)	Loss of Material/General, Pitting and Crevice Corrosion	External Surfaces Monitoring	VII.H1-8	3.3.1-60	C
Bird Screen	Filter	Carbon Steel	Air/Gas - Wetted (Internal)	Loss of Material/General, Pitting and Crevice Corrosion	Inspection of Internal Surfaces in Miscellaneous Piping and Ducting Components	V.D2-17	3.2.1-34	C
Bolting	Mechanical Closure	Carbon and Low Alloy Steel Bolting	Air - Indoor (External)	Loss of Material/General Corrosion	External Surfaces Monitoring	V.B-2	3.2.1-31	A
Bolting	Mechanical Closure	Carbon and Low Alloy Steel Bolting	Air - Indoor (External)	Loss of Preload/Thermal Effects, Gasket Creep, and Self-Loosening	Bolting Integrity	V.E-5	3.2.1-24	B
Bolting	Mechanical Closure	Carbon and Low Alloy Steel Bolting	Air - Outdoor (External)	Loss of Material/General, Pitting and Crevice Corrosion	External Surfaces Monitoring	V.E-1	3.2.1-23	E, 1
Bolting	Mechanical Closure	Stainless Steel Bolting	Air - Indoor (External)	None	None	III.B2-8	3.5.1-59	A
Damper Housing	Pressure Boundary	Carbon Steel	Air - Indoor (External)	Loss of Material/General Corrosion	External Surfaces Monitoring	V.B-3	3.2.1-31	A
Damper Housing	Pressure Boundary	Carbon Steel	Air/Gas - Wetted (Internal)	Loss of Material/General, Pitting and Crevice Corrosion	Inspection of Internal Surfaces in Miscellaneous Piping and Ducting Components	V.D2-17	3.2.1-34	C
Door Seal	Pressure Boundary	Elastomer	Air - Indoor (External)	Hardening and Loss of Strength/Elastomer Degradation	Periodic Inspection	V.B-4	3.2.1-11	E, 2

Table 3.2.2-3 Filtration, Recirculation, and Ventilation System (Continued)

Component Type	Intended Function	Material	Environment	Aging Effect Requiring Management	Aging Management Programs	NUREG-1801 Vol. 2 Item	Table 1 Item	Notes
Door Seal	Pressure Boundary	Elastomer	Air/Gas - Wetted (Internal)	Hardening and Loss of Strength/Elastomer Degradation	Periodic Inspection	VII.F3-7	3.3.1-11	E, 2
Ducting and Components	Pressure Boundary	Carbon Steel	Air - Indoor (External)	Loss of Material/General Corrosion	External Surfaces Monitoring	V.B-3	3.2.1-31	A
Ducting and Components	Pressure Boundary	Carbon Steel	Air/Gas - Wetted (Internal)	Loss of Material/General, Pitting and Crevice Corrosion	Inspection of Internal Surfaces in Miscellaneous Piping and Ducting Components	V.D2-17	3.2.1-34	C
Ducting and Components	Pressure Boundary	Polymer	Air - Indoor (External)	None	None			F, 3
Ducting and Components	Pressure Boundary	Polymer	Air/Gas - Wetted (Internal)	None	None			F, 3
Fan Housing	Pressure Boundary	Carbon Steel	Air - Indoor (External)	Loss of Material/General Corrosion	External Surfaces Monitoring	V.B-3	3.2.1-31	A
Fan Housing	Pressure Boundary	Carbon Steel	Air/Gas - Wetted (Internal)	Loss of Material/General, Pitting and Crevice Corrosion	Inspection of Internal Surfaces in Miscellaneous Piping and Ducting Components	V.D2-17	3.2.1-34	C
Filter Housing	Pressure Boundary	Carbon Steel	Air - Indoor (External)	Loss of Material/General Corrosion	External Surfaces Monitoring	V.B-3	3.2.1-31	A
Filter Housing	Pressure Boundary	Carbon Steel	Air/Gas - Wetted (Internal)	Loss of Material/General, Pitting and Crevice Corrosion	Inspection of Internal Surfaces in Miscellaneous Piping and Ducting Components	V.D2-17	3.2.1-34	C
Flexible Connection	Pressure Boundary	Elastomer	Air - Indoor (External)	Hardening and Loss of Strength/Elastomer Degradation	Periodic Inspection	V.B-4	3.2.1-11	E, 4
Flexible Connection	Pressure Boundary	Elastomer	Air/Gas - Wetted (Internal)	Hardening and Loss of Strength/Elastomer Degradation	Periodic Inspection	VII.F3-7	3.3.1-11	E, 4
Flow Element	Pressure Boundary	Galvanized Steel	Air - Indoor (External)	None	None	VII.J-6	3.3.1-92	A
Flow Element	Pressure Boundary	Stainless Steel	Air/Gas - Wetted (Internal)	Loss of Material/Pitting and Crevice Corrosion	Periodic Inspection	V.D2-35	3.2.1-8	E, 2

Table 3.2.2-3 Filtration, Recirculation, and Ventilation System (Continued)

Component Type	Intended Function	Material	Environment	Aging Effect Requiring Management	Aging Management Programs	NUREG-1801 Vol. 2 Item	Table 1 Item	Notes
Heat Exchanger Components (FRVS Recirc cooling coils)	Evaluated with the Closed Cycle Cooling Water System	Not Applicable	Not Applicable	Not Applicable	Not Applicable			
Piping and Fittings	Pressure Boundary	Carbon Steel	Air - Indoor (External)	Loss of Material/General Corrosion	External Surfaces Monitoring	V.B-3	3.2.1-31	A
Piping and Fittings	Pressure Boundary	Carbon Steel	Air/Gas - Wetted (External)	Loss of Material/General, Pitting and Crevice Corrosion	Inspection of Internal Surfaces in Miscellaneous Piping and Ducting Components	V.D2-17	3.2.1-34	A, 5
Piping and Fittings	Pressure Boundary	Carbon Steel	Air/Gas - Wetted (Internal)	Loss of Material/General, Pitting and Crevice Corrosion	Inspection of Internal Surfaces in Miscellaneous Piping and Ducting Components	V.D2-17	3.2.1-34	A
Piping and Fittings	Pressure Boundary	Copper Alloy with 15% Zinc or More	Air - Indoor (External)	None	None	V.F-3	3.2.1-53	A
Piping and Fittings	Pressure Boundary	Copper Alloy with 15% Zinc or More	Air/Gas - Wetted (Internal)	Loss of Material/Pitting and Crevice Corrosion	Periodic Inspection	VII.F1-16	3.3.1-25	E, 2
Piping and Fittings	Pressure Boundary	Copper Alloy with less than 15% Zinc	Air - Indoor (External)	None	None	V.F-3	3.2.1-53	A
Piping and Fittings	Pressure Boundary	Copper Alloy with less than 15% Zinc	Air/Gas - Wetted (Internal)	Loss of Material/Pitting and Crevice Corrosion	Periodic Inspection	VII.F1-16	3.3.1-25	E, 2
Piping and Fittings	Pressure Boundary	Copper Alloy with less than 15% Zinc	Air/Gas Wetted (External)	Loss of Material/Pitting and Crevice Corrosion	Periodic Inspection	VII.F1-16	3.3.1-25	E, 2, 5
Piping and Fittings	Pressure Boundary	Galvanized Steel	Air/Gas - Wetted (External)	Loss of Material/General, Pitting and Crevice Corrosion	Inspection of Internal Surfaces in Miscellaneous Piping and Ducting Components	V.D2-17	3.2.1-34	A, 5
Piping and Fittings	Pressure Boundary	Galvanized Steel	Air/Gas - Wetted (Internal)	Loss of Material/General, Pitting and Crevice Corrosion	Inspection of Internal Surfaces in Miscellaneous Piping and Ducting Components	V.D2-17	3.2.1-34	A

Table 3.2.2-3 Filtration, Recirculation, and Ventilation System (Continued)

Component Type	Intended Function	Material	Environment	Aging Effect Requiring Management	Aging Management Programs	NUREG-1801 Vol. 2 Item	Table 1 Item	Notes
Piping and Fittings	Pressure Boundary	Stainless Steel	Air - Indoor (External)	None	None	V.F-12	3.2.1-53	A
Piping and Fittings	Pressure Boundary	Stainless Steel	Air - Outdoor (External)	Loss of Material/Pitting and Crevice Corrosion	Periodic Inspection	III.B2-7	3.5.1-50	E, 6
Piping and Fittings	Pressure Boundary	Stainless Steel	Air/Gas - Wetted (Internal)	Loss of Material/Pitting and Crevice Corrosion	Periodic Inspection	V.D2-35	3.2.1-8	E, 2
Tanks (Drum Trap)	Pressure Boundary	Carbon Steel	Air - Indoor (External)	Loss of Material/General Corrosion	External Surfaces Monitoring	V.E-7	3.2.1-31	A
Tanks (Drum Trap)	Pressure Boundary	Carbon Steel	Air/Gas - Wetted (Internal)	Loss of Material/General, Pitting and Crevice Corrosion	Inspection of Internal Surfaces in Miscellaneous Piping and Ducting Components	V.D2-17	3.2.1-34	C
Thermowell	Pressure Boundary	Carbon Steel	Air - Indoor (External)	Loss of Material/General Corrosion	External Surfaces Monitoring	V.B-3	3.2.1-31	A
Thermowell	Pressure Boundary	Carbon Steel	Air/Gas - Wetted (Internal)	Loss of Material/General, Pitting and Crevice Corrosion	Inspection of Internal Surfaces in Miscellaneous Piping and Ducting Components	V.D2-17	3.2.1-34	A
Thermowell	Pressure Boundary	Stainless Steel	Air - Indoor (External)	None	None	V.F-12	3.2.1-53	A
Thermowell	Pressure Boundary	Stainless Steel	Air/Gas - Wetted (Internal)	Loss of Material/Pitting and Crevice Corrosion	Periodic Inspection	V.D2-35	3.2.1-8	E, 2
Valve Body	Pressure Boundary	Copper Alloy with 15% Zinc or More	Air - Indoor (External)	None	None	V.F-3	3.2.1-53	A
Valve Body	Pressure Boundary	Copper Alloy with 15% Zinc or More	Air/Gas - Wetted (Internal)	Loss of Material/Pitting and Crevice Corrosion	Periodic Inspection	VII.F1-16	3.3.1-25	E, 2
Valve Body	Pressure Boundary	Copper Alloy with less than 15% Zinc	Air - Indoor (External)	None	None	V.F-3	3.2.1-53	A
Valve Body	Pressure Boundary	Copper Alloy with less than 15% Zinc	Air/Gas - Wetted (Internal)	Loss of Material/Pitting and Crevice Corrosion	Periodic Inspection	VII.F1-16	3.3.1-25	E, 2
Valve Body	Pressure Boundary	Stainless Steel	Air - Indoor (External)	None	None	V.F-12	3.2.1-53	A
Valve Body	Pressure Boundary	Stainless Steel	Air - Outdoor (External)	Loss of Material/Pitting and Crevice Corrosion	Periodic Inspection	III.B2-7	3.5.1-50	E, 6

Table 3.2.2-3 Filtration, Recirculation, and Ventilation System (Continued)

Component Type	Intended Function	Material	Environment	Aging Effect Requiring Management	Aging Management Programs	NUREG-1801 Vol. 2 Item	Table 1 Item	Notes
Valve Body	Pressure Boundary	Stainless Steel	Air/Gas - Wetted (Internal)	Loss of Material/Pitting and Crevice Corrosion	Periodic Inspection	V.D2-35	3.2.1-8	E, 2

Notes	Definition of Note
A	Consistent with NUREG-1801 item for component, material, environment, and aging effect. AMP is consistent with NUREG-1801 AMP.
B	Consistent with NUREG-1801 item for component, material, environment, and aging effect. AMP takes some exceptions to NUREG-1801 AMP.
C	Component is different, but consistent with NUREG-1801 item for material, environment, and aging effect. AMP is consistent with NUREG-1801 AMP.
D	Component is different, but consistent with NUREG-1801 item for material, environment, and aging effect. AMP takes some exceptions to NUREG-1801 AMP.
E	Consistent with NUREG-1801 item for material, environment and aging effect, but a different aging management program is credited or NUREG-1801 identifies a plant-specific aging management program.
F	Material not in NUREG-1801 for this component.
G	Environment not in NUREG-1801 for this component and material.
H	Aging effect not in NUREG-1801 for this component, material and environment combination.
I	Aging effect in NUREG-1801 for this component, material and environment combination is not applicable.
J	Neither the component nor the material and environment combination is evaluated in NUREG-1801.

Plant Specific Notes:

1. The External Surfaces Monitoring program is substituted to manage the aging effect(s) applicable to this component type, material, and environment combination.

2. NUREG-1801 specifies a plant-specfic program. The Periodic Inspection program is used to manage the aging effect(s) applicable to this component type, material, and environment combination.

3. The polymer (plexiglass) material located indoors and subject to an indoor air or air-gas (wetted) environment is not subject to significant aging effects. Polymer materials do not experience aging effects unless exposed to temperatures, radiation or chemicals capable of attacking the specific polymer chemical composition. Polymer materials are selected for compatibility with the environment during the design, and if properly selected will not experience significant degradation. Polymer (plexiglass) material in this non-aggressive air environment is not expected to experience significant aging effects. This is consistent with plant operating experience.

4. NUREG-1801 specifies a plant-specific program. The Periodic Inspection program is used to manage the aging effect(s) applicable to this component type, material, and environment combination. Inspection of the expansion joints require physical manipulation; therefore, internal and external inspections, which include physical manipulation of elastomers, will be performed at the same time under the Periodic Inspection program.

5. The environment of Air/Gas - Wetted is applicable to the external surfaces during normal operation. This component is located within the HVAC ductwork and the external surfaces of this component are exposed to the HVAC Air/Gas - Wetted environment.

6. The Periodic Inspection program is substituted to manage the aging effect(s) applicable to this component type, material, and environment combination.

Table 3.2.2-4
High Pressure Coolant Injection (HPCI) System
Summary of Aging Management Evaluation

Table 3.2.2-4 High Pressure Coolant Injection (HPCI) System

Component Type	Intended Function	Material	Environment	Aging Effect Requiring Management	Aging Management Programs	NUREG-1801 Vol. 2 Item	Table 1 Item	Notes
Bolting	Mechanical Closure	Carbon and Low Alloy Steel Bolting	Air - Indoor (External)	Loss of Material/General, Pitting and Crevice Corrosion	Bolting Integrity	V.E-4	3.2.1-23	B
Bolting	Mechanical Closure	Carbon and Low Alloy Steel Bolting	Air - Indoor (External)	Loss of Preload/Thermal Effects, Gasket Creep, and Self-Loosening	Bolting Integrity	V.E-5	3.2.1-24	B
Bolting	Mechanical Closure	Stainless Steel Bolting	Treated Water (External)	Loss of Material/Pitting and Crevice Corrosion	Bolting Integrity			G, 1
Bolting	Mechanical Closure	Stainless Steel Bolting	Treated Water (External)	Loss of Preload/Thermal Effects, Gasket Creep, and Self-Loosening	Bolting Integrity			G, 1
Bolting (Class 1)	Mechanical Closure	Carbon and Low Alloy Steel Bolting	Air - Indoor (External)	Cumulative Fatigue Damage/Fatigue	TLAA	IV.C1-11	3.1.1-4	A, 2
Bolting (Class 1)	Mechanical Closure	Carbon and Low Alloy Steel Bolting	Air - Indoor (External)	Loss of Material/General, Pitting and Crevice Corrosion	Bolting Integrity	V.E-4	3.2.1-23	B
Bolting (Class 1)	Mechanical Closure	Carbon and Low Alloy Steel Bolting	Air - Indoor (External)	Loss of Preload/Thermal Effects, Gasket Creep, and Self-Loosening	Bolting Integrity	IV.C1-10	3.1.1-52	B
Class 1 Piping, Fittings and Branch Connections < NPS 4"	Pressure Boundary	Carbon Steel	Air - Indoor (External)	Loss of Material/General Corrosion	External Surfaces Monitoring	V.D2-2	3.2.1-31	A
Class 1 Piping, Fittings and Branch Connections < NPS 4"	Pressure Boundary	Carbon Steel	Steam (Internal)	Cracking/Thermal and Mechanical Loading	ASME Section XI Inservice Inspection, Subsections IWB, IWC, and IWD	IV.C1-1	3.1.1-48	A

Table 3.2.2-4 High Pressure Coolant Injection (HPCI) System (Continued)

Component Type	Intended Function	Material	Environment	Aging Effect Requiring Management	Aging Management Programs	NUREG-1801 Vol. 2 Item	Table 1 Item	Notes
Class 1 Piping, Fittings and Branch Connections < NPS 4"	Pressure Boundary	Carbon Steel	Steam (Internal)	Cracking/Thermal and Mechanical Loading	Small-Bore Class 1 Piping Inspection	IV.C1-1	3.1.1-48	E, 3
Class 1 Piping, Fittings and Branch Connections < NPS 4"	Pressure Boundary	Carbon Steel	Steam (Internal)	Cracking/Thermal and Mechanical Loading	Water Chemistry	IV.C1-1	3.1.1-48	B
Class 1 Piping, Fittings and Branch Connections < NPS 4"	Pressure Boundary	Carbon Steel	Steam (Internal)	Cumulative Fatigue Damage/Fatigue	TLAA	IV.C1-15	3.1.1-3	A, 2
Class 1 Piping, Fittings and Branch Connections < NPS 4"	Pressure Boundary	Carbon Steel	Steam (Internal)	Loss of Material/Galvanic Corrosion	One-Time Inspection	VIII.E-7	3.4.1-5	C
Class 1 Piping, Fittings and Branch Connections < NPS 4"	Pressure Boundary	Carbon Steel	Steam (Internal)	Loss of Material/Galvanic Corrosion	Water Chemistry	VIII.E-7	3.4.1-5	D
Class 1 Piping, Fittings and Branch Connections < NPS 4"	Pressure Boundary	Carbon Steel	Steam (Internal)	Loss of Material/General, Pitting and Crevice Corrosion	One-Time Inspection	IV.C1-6	3.1.1-13	C
Class 1 Piping, Fittings and Branch Connections < NPS 4"	Pressure Boundary	Carbon Steel	Steam (Internal)	Loss of Material/General, Pitting and Crevice Corrosion	Water Chemistry	IV.C1-6	3.1.1-13	D, 4
Class 1 Piping, Fittings and Branch Connections < NPS 4"	Pressure Boundary	Carbon Steel	Treated Water (Internal)	Cracking/Thermal and Mechanical Loading	ASME Section XI Inservice Inspection, Subsections IWB, IWC, and IWD	IV.C1-1	3.1.1-48	A
Class 1 Piping, Fittings and Branch Connections < NPS 4"	Pressure Boundary	Carbon Steel	Treated Water (Internal)	Cracking/Thermal and Mechanical Loading	Small-Bore Class 1 Piping Inspection	IV.C1-1	3.1.1-48	E, 3

Table 3.2.2-4 High Pressure Coolant Injection (HPCI) System (Continued)

Component Type	Intended Function	Material	Environment	Aging Effect Requiring Management	Aging Management Programs	NUREG-1801 Vol. 2 Item	Table 1 Item	Notes
Class 1 Piping, Fittings and Branch Connections < NPS 4"	Pressure Boundary	Carbon Steel	Treated Water (Internal)	Cracking/Thermal and Mechanical Loading	Water Chemistry	IV.C1-1	3.1.1-48	B
Class 1 Piping, Fittings and Branch Connections < NPS 4"	Pressure Boundary	Carbon Steel	Treated Water (Internal)	Cumulative Fatigue Damage/Fatigue	TLAA	IV.C1-15	3.1.1-3	A, 2
Class 1 Piping, Fittings and Branch Connections < NPS 4"	Pressure Boundary	Carbon Steel	Treated Water (Internal)	Loss of Material/General, Pitting and Crevice Corrosion	One-Time Inspection	IV.C1-6	3.1.1-13	C
Class 1 Piping, Fittings and Branch Connections < NPS 4"	Pressure Boundary	Carbon Steel	Treated Water (Internal)	Loss of Material/General, Pitting and Crevice Corrosion	Water Chemistry	IV.C1-6	3.1.1-13	D, 4
Class 1 Piping, Fittings and Branch Connections < NPS 4"	Pressure Boundary	Stainless Steel	Air - Indoor (External)	None	None	IV.E-2	3.1.1-86	A
Class 1 Piping, Fittings and Branch Connections < NPS 4"	Pressure Boundary	Stainless Steel	Steam (Internal)	Cracking/Stress Corrosion Cracking, Thermal and Mechanical Loading	ASME Section XI Inservice Inspection, Subsections IWB, IWC, and IWD	IV.C1-1	3.1.1-48	A
Class 1 Piping, Fittings and Branch Connections < NPS 4"	Pressure Boundary	Stainless Steel	Steam (Internal)	Cracking/Stress Corrosion Cracking, Thermal and Mechanical Loading	Small-Bore Class 1 Piping Inspection	IV.C1-1	3.1.1-48	E, 3
Class 1 Piping, Fittings and Branch Connections < NPS 4"	Pressure Boundary	Stainless Steel	Steam (Internal)	Cracking/Stress Corrosion Cracking, Thermal and Mechanical Loading	Water Chemistry	IV.C1-1	3.1.1-48	B
Class 1 Piping, Fittings and Branch Connections < NPS 4"	Pressure Boundary	Stainless Steel	Steam (Internal)	Cumulative Fatigue Damage/Fatigue	TLAA	IV.C1-15	3.1.1-3	A, 2

Table 3.2.2-4 High Pressure Coolant Injection (HPCI) System (Continued)

Component Type	Intended Function	Material	Environment	Aging Effect Requiring Management	Aging Management Programs	NUREG-1801 Vol. 2 Item	Table 1 Item	Notes
Class 1 Piping, Fittings and Branch Connections < NPS 4"	Pressure Boundary	Stainless Steel	Steam (Internal)	Loss of Material/Pitting and Crevice Corrosion	One-Time Inspection	IV.C1-14	3.1.1-15	A
Class 1 Piping, Fittings and Branch Connections < NPS 4"	Pressure Boundary	Stainless Steel	Steam (Internal)	Loss of Material/Pitting and Crevice Corrosion	Water Chemistry	IV.C1-14	3.1.1-15	B
Class 1 Piping, Fittings and Branch Connections < NPS 4"	Pressure Boundary	Stainless Steel	Treated Water (Internal) > 140 F	Cracking/Stress Corrosion Cracking, Thermal and Mechanical Loading	ASME Section XI Inservice Inspection, Subsections IWB, IWC, and IWD	IV.C1-1	3.1.1-48	A
Class 1 Piping, Fittings and Branch Connections < NPS 4"	Pressure Boundary	Stainless Steel	Treated Water (Internal) > 140 F	Cracking/Stress Corrosion Cracking, Thermal and Mechanical Loading	Small-Bore Class 1 Piping Inspection	IV.C1-1	3.1.1-48	E, 3
Class 1 Piping, Fittings and Branch Connections < NPS 4"	Pressure Boundary	Stainless Steel	Treated Water (Internal) > 140 F	Cracking/Stress Corrosion Cracking, Thermal and Mechanical Loading	Water Chemistry	IV.C1-1	3.1.1-48	B
Class 1 Piping, Fittings and Branch Connections < NPS 4"	Pressure Boundary	Stainless Steel	Treated Water (Internal) > 140 F	Cumulative Fatigue Damage/Fatigue	TLAA	IV.C1-15	3.1.1-3	A, 2
Class 1 Piping, Fittings and Branch Connections < NPS 4"	Pressure Boundary	Stainless Steel	Treated Water (Internal) > 140 F	Loss of Material/Pitting and Crevice Corrosion	One-Time Inspection	IV.C1-14	3.1.1-15	A
Class 1 Piping, Fittings and Branch Connections < NPS 4"	Pressure Boundary	Stainless Steel	Treated Water (Internal) > 140 F	Loss of Material/Pitting and Crevice Corrosion	Water Chemistry	IV.C1-14	3.1.1-15	B
Condensing Chamber (Class 1)	Pressure Boundary	Stainless Steel	Air - Indoor (External)	None	None	IV.E-2	3.1.1-86	A

Table 3.2.2-4 High Pressure Coolant Injection (HPCI) System (Continued)

Component Type	Intended Function	Material	Environment	Aging Effect Requiring Management	Aging Management Programs	NUREG-1801 Vol. 2 Item	Table 1 Item	Notes
Condensing Chamber (Class 1)	Pressure Boundary	Stainless Steel	Steam (Internal)	Cracking/Stress Corrosion Cracking	ASME Section XI Inservice Inspection, Subsections IWB, IWC, and IWD	IV.C1-1	3.1.1-48	E, 5
Condensing Chamber (Class 1)	Pressure Boundary	Stainless Steel	Steam (Internal)	Cracking/Stress Corrosion Cracking	Water Chemistry	IV.C1-1	3.1.1-48	E, 5
Condensing Chamber (Class 1)	Pressure Boundary	Stainless Steel	Steam (Internal)	Loss of Material/Pitting and Crevice Corrosion	One-Time Inspection	IV.C1-14	3.1.1-15	A
Condensing Chamber (Class 1)	Pressure Boundary	Stainless Steel	Steam (Internal)	Loss of Material/Pitting and Crevice Corrosion	Water Chemistry	IV.C1-14	3.1.1-15	B
Condensing Chamber (Class 1)	Pressure Boundary	Stainless Steel	Treated Water (Internal) > 140 F	Cracking/Stress Corrosion Cracking	ASME Section XI Inservice Inspection, Subsections IWB, IWC, and IWD	IV.C1-1	3.1.1-48	E, 5
Condensing Chamber (Class 1)	Pressure Boundary	Stainless Steel	Treated Water (Internal) > 140 F	Cracking/Stress Corrosion Cracking	Water Chemistry	IV.C1-1	3.1.1-48	E, 5
Condensing Chamber (Class 1)	Pressure Boundary	Stainless Steel	Treated Water (Internal) > 140 F	Loss of Material/Pitting and Crevice Corrosion	One-Time Inspection	IV.C1-14	3.1.1-15	A
Condensing Chamber (Class 1)	Pressure Boundary	Stainless Steel	Treated Water (Internal) > 140 F	Loss of Material/Pitting and Crevice Corrosion	Water Chemistry	IV.C1-14	3.1.1-15	B
Filter Housing	Pressure Boundary	Carbon Steel	Air - Indoor (External)	Loss of Material/General Corrosion	External Surfaces Monitoring	V.D2-2	3.2.1-31	A
Filter Housing	Pressure Boundary	Carbon Steel	Lubricating Oil (Internal)	Loss of Material/General, Pitting and Crevice Corrosion	Lubricating Oil Analysis	V.D2-30	3.2.1-16	B
Filter Housing	Pressure Boundary	Carbon Steel	Lubricating Oil (Internal)	Loss of Material/General, Pitting and Crevice Corrosion	One-Time Inspection	V.D2-30	3.2.1-16	A
Flow Element	Pressure Boundary	Stainless Steel	Air - Indoor (External)	None	None	V.F-12	3.2.1-53	A
Flow Element	Pressure Boundary	Stainless Steel	Treated Water (Internal)	Loss of Material/Pitting and Crevice Corrosion	One-Time Inspection	V.D2-28	3.2.1-5	A
Flow Element	Pressure Boundary	Stainless Steel	Treated Water (Internal)	Loss of Material/Pitting and Crevice Corrosion	Water Chemistry	V.D2-28	3.2.1-5	B

Table 3.2.2-4 High Pressure Coolant Injection (HPCI) System (Continued)

Component Type	Intended Function	Material	Environment	Aging Effect Requiring Management	Aging Management Programs	NUREG-1801 Vol. 2 Item	Table 1 Item	Notes
Flow Element (HPCI Steam Flow Venturi) (Class 1)	Pressure Boundary	Carbon Steel	Air - Indoor (External)	Loss of Material/General Corrosion	External Surfaces Monitoring	V.D2-2	3.2.1-31	A
Flow Element (HPCI Steam Flow Venturi) (Class 1)	Pressure Boundary	Carbon Steel	Steam (Internal)	Loss of Material/General, Pitting and Crevice Corrosion	One-Time Inspection	IV.C1-6	3.1.1-13	C
Flow Element (HPCI Steam Flow Venturi) (Class 1)	Pressure Boundary	Carbon Steel	Steam (Internal)	Loss of Material/General, Pitting and Crevice Corrosion	Water Chemistry	IV.C1-6	3.1.1-13	D
Flow Element (HPCI Steam Flow Venturi) (Class 1)	Pressure Boundary	Stainless Steel	Air - Indoor (External)	None	None	IV.E-2	3.1.1-86	A
Flow Element (HPCI Steam Flow Venturi) (Class 1)	Pressure Boundary	Stainless Steel	Steam (Internal)	Cracking/Stress Corrosion Cracking	BWR Stress Corrosion Cracking	V.D2-29	3.2.1-18	A
Flow Element (HPCI Steam Flow Venturi) (Class 1)	Pressure Boundary	Stainless Steel	Steam (Internal)	Cracking/Stress Corrosion Cracking	Water Chemistry	V.D2-29	3.2.1-18	B
Flow Element (HPCI Steam Flow Venturi) (Class 1)	Pressure Boundary	Stainless Steel	Steam (Internal)	Loss of Material/Pitting and Crevice Corrosion	One-Time Inspection	IV.C1-14	3.1.1-15	A
Flow Element (HPCI Steam Flow Venturi) (Class 1)	Pressure Boundary	Stainless Steel	Steam (Internal)	Loss of Material/Pitting and Crevice Corrosion	Water Chemistry	IV.C1-14	3.1.1-15	B
Gearbox	Pressure Boundary	Carbon Steel	Air - Indoor (External)	Loss of Material/General Corrosion	External Surfaces Monitoring	V.D2-2	3.2.1-31	A
Gearbox	Pressure Boundary	Carbon Steel	Lubricating Oil (Internal)	Loss of Material/General, Pitting and Crevice Corrosion	Lubricating Oil Analysis	V.D2-30	3.2.1-16	B
Gearbox	Pressure Boundary	Carbon Steel	Lubricating Oil (Internal)	Loss of Material/General, Pitting and Crevice Corrosion	One-Time Inspection	V.D2-30	3.2.1-16	A
Heat Exchanger Components (Lube Oil Cooler)	Heat Transfer	Copper Alloy with 15% Zinc or More (Tubes)	Lubricating Oil (External)	Reduction of Heat Transfer/Fouling	Lubricating Oil Analysis	V.D2-9	3.2.1-9	B

Table 3.2.2-4 High Pressure Coolant Injection (HPCI) System (Continued)

Component Type	Intended Function	Material	Environment	Aging Effect Requiring Management	Aging Management Programs	NUREG-1801 Vol. 2 Item	Table 1 Item	Notes
Heat Exchanger Components (Lube Oil Cooler)	Heat Transfer	Copper Alloy with 15% Zinc or More (Tubes)	Lubricating Oil (External)	Reduction of Heat Transfer/Fouling	One-Time Inspection	V.D2-9	3.2.1-9	A
Heat Exchanger Components (Lube Oil Cooler)	Heat Transfer	Copper Alloy with 15% Zinc or More (Tubes)	Treated Water (Internal)	Reduction of Heat Transfer/Fouling	One-Time Inspection	VIII.E-10	3.4.1-9	A
Heat Exchanger Components (Lube Oil Cooler)	Heat Transfer	Copper Alloy with 15% Zinc or More (Tubes)	Treated Water (Internal)	Reduction of Heat Transfer/Fouling	Water Chemistry	VIII.E-10	3.4.1-9	B
Heat Exchanger Components (Lube Oil Cooler)	Pressure Boundary	Copper Alloy with 15% Zinc or More (Shell Side Components)	Air - Indoor (External)	None	None	V.F-3	3.2.1-53	C
Heat Exchanger Components (Lube Oil Cooler)	Pressure Boundary	Copper Alloy with 15% Zinc or More (Shell Side Components)	Lubricating Oil (Internal)	Loss of Material/Pitting and Crevice Corrosion	Lubricating Oil Analysis	V.D2-22	3.2.1-6	D
Heat Exchanger Components (Lube Oil Cooler)	Pressure Boundary	Copper Alloy with 15% Zinc or More (Shell Side Components)	Lubricating Oil (Internal)	Loss of Material/Pitting and Crevice Corrosion	One-Time Inspection	V.D2-22	3.2.1-6	C
Heat Exchanger Components (Lube Oil Cooler)	Pressure Boundary	Copper Alloy with 15% Zinc or More (Tubes)	Lubricating Oil (External)	Loss of Material/Pitting and Crevice Corrosion	Lubricating Oil Analysis	V.D2-22	3.2.1-6	D
Heat Exchanger Components (Lube Oil Cooler)	Pressure Boundary	Copper Alloy with 15% Zinc or More (Tubes)	Lubricating Oil (External)	Loss of Material/Pitting and Crevice Corrosion	One-Time Inspection	V.D2-22	3.2.1-6	C
Heat Exchanger Components (Lube Oil Cooler)	Pressure Boundary	Copper Alloy with 15% Zinc or More (Tubes)	Treated Water (Internal)	Loss of Material/Pitting, Crevice and Galvanic Corrosion	One-Time Inspection	VII.A4-7	3.3.1-31	C
Heat Exchanger Components (Lube Oil Cooler)	Pressure Boundary	Copper Alloy with 15% Zinc or More (Tubes)	Treated Water (Internal)	Loss of Material/Pitting, Crevice and Galvanic Corrosion	Water Chemistry	VII.A4-7	3.3.1-31	D

Table 3.2.2-4 High Pressure Coolant Injection (HPCI) System (Continued)

Component Type	Intended Function	Material	Environment	Aging Effect Requiring Management	Aging Management Programs	NUREG-1801 Vol. 2 Item	Table 1 Item	Notes
Heat Exchanger Components (Lube Oil Cooler)	Pressure Boundary	Copper Alloy with 15% Zinc or More (Tubes)	Treated Water (Internal)	Loss of Material/Selective Leaching	Selective Leaching of Materials	VII.F1-9	3.3.1-84	A
Heat Exchanger Components (Lube Oil Cooler)	Pressure Boundary	Copper Alloy with less than 15% Zinc (Shell Side Components)	Air - Indoor (External)	None	None	V.F-3	3.2.1-53	C
Heat Exchanger Components (Lube Oil Cooler)	Pressure Boundary	Copper Alloy with less than 15% Zinc (Shell Side Components)	Lubricating Oil (Internal)	Loss of Material/Pitting and Crevice Corrosion	Lubricating Oil Analysis	V.D2-22	3.2.1-6	D
Heat Exchanger Components (Lube Oil Cooler)	Pressure Boundary	Copper Alloy with less than 15% Zinc (Shell Side Components)	Lubricating Oil (Internal)	Loss of Material/Pitting and Crevice Corrosion	One-Time Inspection	V.D2-22	3.2.1-6	C
Heat Exchanger Components (Lube Oil Cooler)	Pressure Boundary	Copper Alloy with less than 15% Zinc (Tube Side Components)	Air - Indoor (External)	None	None	V.F-3	3.2.1-53	C
Heat Exchanger Components (Lube Oil Cooler)	Pressure Boundary	Copper Alloy with less than 15% Zinc (Tube Side Components)	Treated Water (Internal)	Loss of Material/Pitting and Crevice Corrosion	One-Time Inspection	VIII.A-5	3.4.1-15	C
Heat Exchanger Components (Lube Oil Cooler)	Pressure Boundary	Copper Alloy with less than 15% Zinc (Tube Side Components)	Treated Water (Internal)	Loss of Material/Pitting and Crevice Corrosion	Water Chemistry	VIII.A-5	3.4.1-15	D
Heat Exchanger Components (Lube Oil Cooler)	Pressure Boundary	Copper Alloy with less than 15% Zinc (Tubesheet)	Lubricating Oil (Internal)	Loss of Material/Pitting and Crevice Corrosion	Lubricating Oil Analysis	V.D2-22	3.2.1-6	D
Heat Exchanger Components (Lube Oil Cooler)	Pressure Boundary	Copper Alloy with less than 15% Zinc (Tubesheet)	Lubricating Oil (Internal)	Loss of Material/Pitting and Crevice Corrosion	One-Time Inspection	V.D2-22	3.2.1-6	C
Heat Exchanger Components (Lube Oil Cooler)	Pressure Boundary	Copper Alloy with less than 15% Zinc (Tubesheet)	Treated Water (Internal)	Loss of Material/Pitting and Crevice Corrosion	One-Time Inspection	VIII.A-5	3.4.1-15	C

Table 3.2.2-4 High Pressure Coolant Injection (HPCI) System (Continued)

Component Type	Intended Function	Material	Environment	Aging Effect Requiring Management	Aging Management Programs	NUREG-1801 Vol. 2 Item	Table 1 Item	Notes
Heat Exchanger Components (Lube Oil Cooler)	Pressure Boundary	Copper Alloy with less than 15% Zinc (Tubesheet)	Treated Water (Internal)	Loss of Material/Pitting and Crevice Corrosion	Water Chemistry	VIII.A-5	3.4.1-15	D
Hoses	Pressure Boundary	Stainless Steel	Air - Indoor (External)	None	None	V.F-12	3.2.1-53	A
Hoses	Pressure Boundary	Stainless Steel	Air/Gas - Wetted (Internal)	Loss of Material/Pitting and Crevice Corrosion	Periodic Inspection	V.D2-35	3.2.1-8	E, 6
Piping and Fittings	Leakage Boundary	Carbon Steel	Air - Indoor (External)	Loss of Material/General Corrosion	External Surfaces Monitoring	V.D2-2	3.2.1-31	A
Piping and Fittings	Leakage Boundary	Carbon Steel	Air/Gas - Wetted (Internal)	Loss of Material/General, Pitting and Crevice Corrosion	Inspection of Internal Surfaces in Miscellaneous Piping and Ducting Components	V.D2-17	3.2.1-34	A
Piping and Fittings	Leakage Boundary	Carbon Steel	Steam (Internal)	Loss of Material/General, Pitting and Crevice Corrosion	One-Time Inspection	V.D2-33	3.2.1-14	A
Piping and Fittings	Leakage Boundary	Carbon Steel	Steam (Internal)	Loss of Material/General, Pitting and Crevice Corrosion	Water Chemistry	V.D2-33	3.2.1-14	B, 4
Piping and Fittings	Leakage Boundary	Carbon Steel	Steam (Internal)	Wall Thinning/Flow Accelerated Corrosion	Flow-Accelerated Corrosion	V.D2-34	3.2.1-19	B, 7
Piping and Fittings	Leakage Boundary	Carbon Steel	Treated Water (Internal)	Loss of Material/General, Pitting and Crevice Corrosion	One-Time Inspection	V.D2-33	3.2.1-14	A
Piping and Fittings	Leakage Boundary	Carbon Steel	Treated Water (Internal)	Loss of Material/General, Pitting and Crevice Corrosion	Water Chemistry	V.D2-33	3.2.1-14	B, 4
Piping and Fittings	Leakage Boundary	Stainless Steel	Air - Indoor (External)	None	None	V.F-12	3.2.1-53	A
Piping and Fittings	Leakage Boundary	Stainless Steel	Air/Gas - Wetted (Internal)	Loss of Material/Pitting and Crevice Corrosion	Periodic Inspection	V.D2-35	3.2.1-8	E, 6
Piping and Fittings	Leakage Boundary	Stainless Steel	Treated Water (Internal)	Loss of Material/Pitting and Crevice Corrosion	One-Time Inspection	V.D2-28	3.2.1-5	A
Piping and Fittings	Leakage Boundary	Stainless Steel	Treated Water (Internal)	Loss of Material/Pitting and Crevice Corrosion	Water Chemistry	V.D2-28	3.2.1-5	B

Table 3.2.2-4 High Pressure Coolant Injection (HPCI) System (Continued)

Component Type	Intended Function	Material	Environment	Aging Effect Requiring Management	Aging Management Programs	NUREG-1801 Vol. 2 Item	Table 1 Item	Notes
Piping and Fittings	Pressure Boundary	Carbon Steel	Air - Indoor (External)	Loss of Material/General Corrosion	External Surfaces Monitoring	V.D2-2	3.2.1-31	A
Piping and Fittings	Pressure Boundary	Carbon Steel	Air/Gas - Wetted (Internal)	Loss of Material/General, Pitting and Crevice Corrosion	Inspection of Internal Surfaces in Miscellaneous Piping and Ducting Components	V.D2-17	3.2.1-34	A
Piping and Fittings	Pressure Boundary	Carbon Steel	Lubricating Oil (Internal)	Loss of Material/General, Pitting and Crevice Corrosion	Lubricating Oil Analysis	V.D2-30	3.2.1-16	B
Piping and Fittings	Pressure Boundary	Carbon Steel	Lubricating Oil (Internal)	Loss of Material/General, Pitting and Crevice Corrosion	One-Time Inspection	V.D2-30	3.2.1-16	A
Piping and Fittings	Pressure Boundary	Carbon Steel	Steam (Internal)	Cumulative Fatigue Damage/Fatigue	TLAA	V.D2-32	3.2.1-1	A, 2
Piping and Fittings	Pressure Boundary	Carbon Steel	Steam (Internal)	Loss of Material/General, Pitting and Crevice Corrosion	One-Time Inspection	V.D2-33	3.2.1-14	A
Piping and Fittings	Pressure Boundary	Carbon Steel	Steam (Internal)	Loss of Material/General, Pitting and Crevice Corrosion	Water Chemistry	V.D2-33	3.2.1-14	B, 4
Piping and Fittings	Pressure Boundary	Carbon Steel	Steam (Internal)	Wall Thinning/Flow Accelerated Corrosion	Flow-Accelerated Corrosion	V.D2-34	3.2.1-19	B, 7
Piping and Fittings	Pressure Boundary	Carbon Steel	Treated Water (External)	Loss of Material/General, Pitting and Crevice Corrosion	One-Time Inspection	V.D2-33	3.2.1-14	A
Piping and Fittings	Pressure Boundary	Carbon Steel	Treated Water (External)	Loss of Material/General, Pitting and Crevice Corrosion	Water Chemistry	V.D2-33	3.2.1-14	B, 4
Piping and Fittings	Pressure Boundary	Carbon Steel	Treated Water (Internal)	Loss of Material/General, Pitting and Crevice Corrosion	One-Time Inspection	V.D2-33	3.2.1-14	A
Piping and Fittings	Pressure Boundary	Carbon Steel	Treated Water (Internal)	Loss of Material/General, Pitting and Crevice Corrosion	Water Chemistry	V.D2-33	3.2.1-14	B, 4

Table 3.2.2-4 High Pressure Coolant Injection (HPCI) System (Continued)

Component Type	Intended Function	Material	Environment	Aging Effect Requiring Management	Aging Management Programs	NUREG-1801 Vol. 2 Item	Table 1 Item	Notes
Piping and Fittings	Pressure Boundary	Stainless Steel	Air - Indoor (External)	None	None	V.F-12	3.2.1-53	A
Piping and Fittings	Pressure Boundary	Stainless Steel	Air/Gas - Wetted (Internal)	Loss of Material/Pitting and Crevice Corrosion	Periodic Inspection	V.D2-35	3.2.1-8	E, 6
Piping and Fittings	Pressure Boundary	Stainless Steel	Lubricating Oil (Internal)	Loss of Material/Pitting and Crevice Corrosion	Lubricating Oil Analysis	V.D1-24	3.2.1-6	B
Piping and Fittings	Pressure Boundary	Stainless Steel	Lubricating Oil (Internal)	Loss of Material/Pitting and Crevice Corrosion	One-Time Inspection	V.D1-24	3.2.1-6	A
Piping and Fittings	Pressure Boundary	Stainless Steel	Steam (Internal)	Cracking/Stress Corrosion Cracking	One-Time Inspection	VIII.B2-1	3.4.1-13	A
Piping and Fittings	Pressure Boundary	Stainless Steel	Steam (Internal)	Cracking/Stress Corrosion Cracking	Water Chemistry	VIII.B2-1	3.4.1-13	B
Piping and Fittings	Pressure Boundary	Stainless Steel	Steam (Internal)	Cumulative Fatigue Damage/Fatigue	TLAA	VII.E3-14	3.3.1-2	A, 2
Piping and Fittings	Pressure Boundary	Stainless Steel	Steam (Internal)	Loss of Material/Pitting and Crevice Corrosion	One-Time Inspection	V.D2-28	3.2.1-5	A
Piping and Fittings	Pressure Boundary	Stainless Steel	Steam (Internal)	Loss of Material/Pitting and Crevice Corrosion	Water Chemistry	V.D2-28	3.2.1-5	B
Piping and Fittings	Pressure Boundary	Stainless Steel	Treated Water (Internal)	Loss of Material/Pitting and Crevice Corrosion	One-Time Inspection	V.D2-28	3.2.1-5	A
Piping and Fittings	Pressure Boundary	Stainless Steel	Treated Water (Internal)	Loss of Material/Pitting and Crevice Corrosion	Water Chemistry	V.D2-28	3.2.1-5	B
Piping and Fittings	Pressure Boundary	Stainless Steel	Treated Water (Internal) > 140 F	Cracking/Stress Corrosion Cracking	One-Time Inspection	VIII.E-31	3.4.1-14	A
Piping and Fittings	Pressure Boundary	Stainless Steel	Treated Water (Internal) > 140 F	Cracking/Stress Corrosion Cracking	Water Chemistry	VIII.E-31	3.4.1-14	B
Piping and Fittings	Pressure Boundary	Stainless Steel	Treated Water (Internal) > 140 F	Loss of Material/Pitting and Crevice Corrosion	One-Time Inspection	V.D2-28	3.2.1-5	A
Piping and Fittings	Pressure Boundary	Stainless Steel	Treated Water (Internal) > 140 F	Loss of Material/Pitting and Crevice Corrosion	Water Chemistry	V.D2-28	3.2.1-5	B
Piping and Fittings	Structural Support	Carbon Steel	Air - Indoor (External)	Loss of Material/General Corrosion	External Surfaces Monitoring	V.D2-2	3.2.1-31	A

Table 3.2.2-4 High Pressure Coolant Injection (HPCI) System (Continued)

Component Type	Intended Function	Material	Environment	Aging Effect Requiring Management	Aging Management Programs	NUREG-1801 Vol. 2 Item	Table 1 Item	Notes
Piping and Fittings	Structural Support	Carbon Steel	Air/Gas - Wetted (Internal)	Loss of Material/General, Pitting and Crevice Corrosion	Inspection of Internal Surfaces in Miscellaneous Piping and Ducting Components	V.D2-17	3.2.1-34	A
Piping and Fittings (Class 1)	Pressure Boundary	Carbon Steel	Air - Indoor (External)	Loss of Material/General Corrosion	External Surfaces Monitoring	V.D2-2	3.2.1-31	A
Piping and Fittings (Class 1)	Pressure Boundary	Carbon Steel	Steam (Internal)	Cumulative Fatigue Damage/Fatigue	TLAA	IV.C1-15	3.1.1-3	A, 2
Piping and Fittings (Class 1)	Pressure Boundary	Carbon Steel	Steam (Internal)	Loss of Material/Galvanic Corrosion	One-Time Inspection	VIII.E-7	3.4.1-5	C
Piping and Fittings (Class 1)	Pressure Boundary	Carbon Steel	Steam (Internal)	Loss of Material/Galvanic Corrosion	Water Chemistry	VIII.E-7	3.4.1-5	D
Piping and Fittings (Class 1)	Pressure Boundary	Carbon Steel	Steam (Internal)	Loss of Material/General, Pitting and Crevice Corrosion	One-Time Inspection	IV.C1-6	3.1.1-13	C
Piping and Fittings (Class 1)	Pressure Boundary	Carbon Steel	Steam (Internal)	Loss of Material/General, Pitting and Crevice Corrosion	Water Chemistry	IV.C1-6	3.1.1-13	D, 4, 7
Piping and Fittings (Class 1)	Pressure Boundary	Carbon Steel	Treated Water (Internal)	Cumulative Fatigue Damage/Fatigue	TLAA	IV.C1-15	3.1.1-3	A, 2
Piping and Fittings (Class 1)	Pressure Boundary	Carbon Steel	Treated Water (Internal)	Loss of Material/Galvanic Corrosion	One-Time Inspection	VIII.E-7	3.4.1-5	C
Piping and Fittings (Class 1)	Pressure Boundary	Carbon Steel	Treated Water (Internal)	Loss of Material/Galvanic Corrosion	Water Chemistry	VIII.E-7	3.4.1-5	D
Piping and Fittings (Class 1)	Pressure Boundary	Carbon Steel	Treated Water (Internal)	Loss of Material/General, Pitting and Crevice Corrosion	One-Time Inspection	IV.C1-6	3.1.1-13	C
Piping and Fittings (Class 1)	Pressure Boundary	Carbon Steel	Treated Water (Internal)	Loss of Material/General, Pitting and Crevice Corrosion	Water Chemistry	IV.C1-6	3.1.1-13	D, 4, 7
Pump Casing (HPCI booster pump)	Pressure Boundary	Carbon Steel	Air - Indoor (External)	Loss of Material/General Corrosion	External Surfaces Monitoring	V.D2-2	3.2.1-31	A

Table 3.2.2-4 High Pressure Coolant Injection (HPCI) System (Continued)

Component Type	Intended Function	Material	Environment	Aging Effect Requiring Management	Aging Management Programs	NUREG-1801 Vol. 2 Item	Table 1 Item	Notes
Pump Casing (HPCI booster pump)	Pressure Boundary	Carbon Steel	Treated Water (Internal)	Loss of Material/General, Pitting and Crevice Corrosion	One-Time Inspection	V.D2-33	3.2.1-14	A
Pump Casing (HPCI booster pump)	Pressure Boundary	Carbon Steel	Treated Water (Internal)	Loss of Material/General, Pitting and Crevice Corrosion	Water Chemistry	V.D2-33	3.2.1-14	B
Pump Casing (HPCI pump)	Pressure Boundary	Carbon Steel	Air - Indoor (External)	Loss of Material/General Corrosion	External Surfaces Monitoring	V.D2-2	3.2.1-31	A
Pump Casing (HPCI pump)	Pressure Boundary	Carbon Steel	Treated Water (Internal)	Loss of Material/General, Pitting and Crevice Corrosion	One-Time Inspection	V.D2-33	3.2.1-14	A
Pump Casing (HPCI pump)	Pressure Boundary	Carbon Steel	Treated Water (Internal)	Loss of Material/General, Pitting and Crevice Corrosion	Water Chemistry	V.D2-33	3.2.1-14	B
Pump Casing (Jockey Pump)	Pressure Boundary	Stainless Steel	Air - Indoor (External)	None	None	V.F-12	3.2.1-53	A
Pump Casing (Jockey Pump)	Pressure Boundary	Stainless Steel	Treated Water (Internal)	Loss of Material/Pitting and Crevice Corrosion	One-Time Inspection	V.D2-28	3.2.1-5	A
Pump Casing (Jockey Pump)	Pressure Boundary	Stainless Steel	Treated Water (Internal)	Loss of Material/Pitting and Crevice Corrosion	Water Chemistry	V.D2-28	3.2.1-5	B
Pump Casing (Turbine Aux Oil Pump)	Pressure Boundary	Gray Cast Iron	Air - Indoor (External)	Loss of Material/General Corrosion	External Surfaces Monitoring	V.D2-2	3.2.1-31	A
Pump Casing (Turbine Aux Oil Pump)	Pressure Boundary	Gray Cast Iron	Lubricating Oil (Internal)	Loss of Material/General, Pitting and Crevice Corrosion	Lubricating Oil Analysis	V.D2-30	3.2.1-16	B
Pump Casing (Turbine Aux Oil Pump)	Pressure Boundary	Gray Cast Iron	Lubricating Oil (Internal)	Loss of Material/General, Pitting and Crevice Corrosion	One-Time Inspection	V.D2-30	3.2.1-16	A
Pump Casing (Turbine Main Oil Pump)	Pressure Boundary	Gray Cast Iron	Air - Indoor (External)	Loss of Material/General Corrosion	External Surfaces Monitoring	V.D2-2	3.2.1-31	A

Table 3.2.2-4 High Pressure Coolant Injection (HPCI) System (Continued)

Component Type	Intended Function	Material	Environment	Aging Effect Requiring Management	Aging Management Programs	NUREG-1801 Vol. 2 Item	Table 1 Item	Notes
Pump Casing (Turbine Main Oil Pump)	Pressure Boundary	Gray Cast Iron	Lubricating Oil (Internal)	Loss of Material/General, Pitting and Crevice Corrosion	Lubricating Oil Analysis	V.D2-30	3.2.1-16	B
Pump Casing (Turbine Main Oil Pump)	Pressure Boundary	Gray Cast Iron	Lubricating Oil (Internal)	Loss of Material/General, Pitting and Crevice Corrosion	One-Time Inspection	V.D2-30	3.2.1-16	A
Pump Casing (Vacuum Tank Condensate Pump)	Leakage Boundary	Carbon Steel	Air - Indoor (External)	Loss of Material/General Corrosion	External Surfaces Monitoring	V.D2-2	3.2.1-31	A
Pump Casing (Vacuum Tank Condensate Pump)	Leakage Boundary	Carbon Steel	Treated Water (Internal)	Loss of Material/General, Pitting and Crevice Corrosion	One-Time Inspection	V.D2-33	3.2.1-14	A
Pump Casing (Vacuum Tank Condensate Pump)	Leakage Boundary	Carbon Steel	Treated Water (Internal)	Loss of Material/General, Pitting and Crevice Corrosion	Water Chemistry	V.D2-33	3.2.1-14	B
Restricting Orifices	Leakage Boundary	Stainless Steel	Air - Indoor (External)	None	None	V.F-12	3.2.1-53	A
Restricting Orifices	Leakage Boundary	Stainless Steel	Steam (Internal)	Cracking/Stress Corrosion Cracking	One-Time Inspection	VIII.E-31	3.4.1-14	A
Restricting Orifices	Leakage Boundary	Stainless Steel	Steam (Internal)	Cracking/Stress Corrosion Cracking	Water Chemistry	VIII.E-31	3.4.1-14	B
Restricting Orifices	Leakage Boundary	Stainless Steel	Steam (Internal)	Loss of Material/Pitting and Crevice Corrosion	One-Time Inspection	V.D2-28	3.2.1-5	A
Restricting Orifices	Leakage Boundary	Stainless Steel	Steam (Internal)	Loss of Material/Pitting and Crevice Corrosion	Water Chemistry	V.D2-28	3.2.1-5	B
Restricting Orifices	Leakage Boundary	Stainless Steel	Treated Water (Internal) > 140 F	Cracking/Stress Corrosion Cracking	One-Time Inspection	VIII.E-31	3.4.1-14	A
Restricting Orifices	Leakage Boundary	Stainless Steel	Treated Water (Internal) > 140 F	Cracking/Stress Corrosion Cracking	Water Chemistry	VIII.E-31	3.4.1-14	B
Restricting Orifices	Leakage Boundary	Stainless Steel	Treated Water (Internal) > 140 F	Loss of Material/Pitting and Crevice Corrosion	One-Time Inspection	V.D2-28	3.2.1-5	A
Restricting Orifices	Leakage Boundary	Stainless Steel	Treated Water (Internal) > 140 F	Loss of Material/Pitting and Crevice Corrosion	Water Chemistry	V.D2-28	3.2.1-5	B
Restricting Orifices	Pressure Boundary	Stainless Steel	Air - Indoor (External)	None	None	V.F-12	3.2.1-53	A

Table 3.2.2-4 High Pressure Coolant Injection (HPCI) System (Continued)

Component Type	Intended Function	Material	Environment	Aging Effect Requiring Management	Aging Management Programs	NUREG-1801 Vol. 2 Item	Table 1 Item	Notes
Restricting Orifices	Pressure Boundary	Stainless Steel	Air/Gas - Wetted (Internal)	Loss of Material/Pitting and Crevice Corrosion	Periodic Inspection	V.D2-35	3.2.1-8	E, 6
Restricting Orifices	Pressure Boundary	Stainless Steel	Lubricating Oil (Internal)	Loss of Material/Pitting and Crevice Corrosion	Lubricating Oil Analysis	V.D1-24	3.2.1-6	B
Restricting Orifices	Pressure Boundary	Stainless Steel	Lubricating Oil (Internal)	Loss of Material/Pitting and Crevice Corrosion	One-Time Inspection	V.D1-24	3.2.1-6	A
Restricting Orifices	Pressure Boundary	Stainless Steel	Treated Water (Internal) > 140 F	Cracking/Stress Corrosion Cracking	One-Time Inspection	VIII.E-31	3.4.1-14	A
Restricting Orifices	Pressure Boundary	Stainless Steel	Treated Water (Internal) > 140 F	Cracking/Stress Corrosion Cracking	Water Chemistry	VIII.E-31	3.4.1-14	B
Restricting Orifices	Pressure Boundary	Stainless Steel	Treated Water (Internal) > 140 F	Loss of Material/Pitting and Crevice Corrosion	One-Time Inspection	V.D2-28	3.2.1-5	A
Restricting Orifices	Pressure Boundary	Stainless Steel	Treated Water (Internal) > 140 F	Loss of Material/Pitting and Crevice Corrosion	Water Chemistry	V.D2-28	3.2.1-5	B
Restricting Orifices	Throttle	Stainless Steel	Air - Indoor (External)	None	None	V.F-12	3.2.1-53	A
Restricting Orifices	Throttle	Stainless Steel	Air/Gas - Wetted (Internal)	Loss of Material/Pitting and Crevice Corrosion	Periodic Inspection	V.D2-35	3.2.1-8	E, 6
Restricting Orifices	Throttle	Stainless Steel	Lubricating Oil (Internal)	Loss of Material/Pitting and Crevice Corrosion	Lubricating Oil Analysis	V.D1-24	3.2.1-6	B
Restricting Orifices	Throttle	Stainless Steel	Lubricating Oil (Internal)	Loss of Material/Pitting and Crevice Corrosion	One-Time Inspection	V.D1-24	3.2.1-6	A
Restricting Orifices	Throttle	Stainless Steel	Treated Water (Internal) > 140 F	Cracking/Stress Corrosion Cracking	One-Time Inspection	VIII.E-31	3.4.1-14	A
Restricting Orifices	Throttle	Stainless Steel	Treated Water (Internal) > 140 F	Cracking/Stress Corrosion Cracking	Water Chemistry	VIII.E-31	3.4.1-14	B
Restricting Orifices	Throttle	Stainless Steel	Treated Water (Internal) > 140 F	Loss of Material/Pitting and Crevice Corrosion	One-Time Inspection	V.D2-28	3.2.1-5	A
Restricting Orifices	Throttle	Stainless Steel	Treated Water (Internal) > 140 F	Loss of Material/Pitting and Crevice Corrosion	Water Chemistry	V.D2-28	3.2.1-5	B
Restricting Orifices (Class 1)	Pressure Boundary	Stainless Steel	Air - Indoor (External)	None	None	IV.E-2	3.1.1-86	A

Table 3.2.2-4 High Pressure Coolant Injection (HPCI) System (Continued)

Component Type	Intended Function	Material	Environment	Aging Effect Requiring Management	Aging Management Programs	NUREG-1801 Vol. 2 Item	Table 1 Item	Notes
Restricting Orifices (Class 1)	Pressure Boundary	Stainless Steel	Treated Water (Internal) > 140 F	Cracking/Stress Corrosion Cracking	ASME Section XI Inservice Inspection, Subsections IWB, IWC, and IWD	IV.C1-1	3.1.1-48	E, 5
Restricting Orifices (Class 1)	Pressure Boundary	Stainless Steel	Treated Water (Internal) > 140 F	Cracking/Stress Corrosion Cracking	Water Chemistry	IV.C1-1	3.1.1-48	E, 5
Restricting Orifices (Class 1)	Pressure Boundary	Stainless Steel	Treated Water (Internal) > 140 F	Loss of Material/Pitting and Crevice Corrosion	One-Time Inspection	IV.C1-14	3.1.1-15	A
Restricting Orifices (Class 1)	Pressure Boundary	Stainless Steel	Treated Water (Internal) > 140 F	Loss of Material/Pitting and Crevice Corrosion	Water Chemistry	IV.C1-14	3.1.1-15	B
Restricting Orifices (Class 1)	Throttle	Stainless Steel	Air - Indoor (External)	None	None	IV.E-2	3.1.1-86	A
Restricting Orifices (Class 1)	Throttle	Stainless Steel	Treated Water (Internal) > 140 F	Cracking/Stress Corrosion Cracking	ASME Section XI Inservice Inspection, Subsections IWB, IWC, and IWD	IV.C1-1	3.1.1-48	E, 5
Restricting Orifices (Class 1)	Throttle	Stainless Steel	Treated Water (Internal) > 140 F	Cracking/Stress Corrosion Cracking	Water Chemistry	IV.C1-1	3.1.1-48	E, 5
Restricting Orifices (Class 1)	Throttle	Stainless Steel	Treated Water (Internal) > 140 F	Loss of Material/Pitting and Crevice Corrosion	One-Time Inspection	IV.C1-14	3.1.1-15	A
Restricting Orifices (Class 1)	Throttle	Stainless Steel	Treated Water (Internal) > 140 F	Loss of Material/Pitting and Crevice Corrosion	Water Chemistry	IV.C1-14	3.1.1-15	B
Sight Glasses	Leakage Boundary	Carbon Steel	Air - Indoor (External)	Loss of Material/General Corrosion	External Surfaces Monitoring	V.D2-2	3.2.1-31	A
Sight Glasses	Leakage Boundary	Carbon Steel	Treated Water (Internal)	Loss of Material/General, Pitting and Crevice Corrosion	One-Time Inspection	V.D2-33	3.2.1-14	A
Sight Glasses	Leakage Boundary	Carbon Steel	Treated Water (Internal)	Loss of Material/General, Pitting and Crevice Corrosion	Water Chemistry	V.D2-33	3.2.1-14	B
Sight Glasses	Leakage Boundary	Glass	Air - Indoor (External)	None	None	V.F-6	3.2.1-52	A
Sight Glasses	Leakage Boundary	Glass	Treated Water (Internal)	None	None	V.F-10	3.2.1-52	A
Sight Glasses	Pressure Boundary	Carbon Steel	Air - Indoor (External)	Loss of Material/General Corrosion	External Surfaces Monitoring	V.D2-2	3.2.1-31	A

Table 3.2.2-4 High Pressure Coolant Injection (HPCI) System (Continued)

Component Type	Intended Function	Material	Environment	Aging Effect Requiring Management	Aging Management Programs	NUREG-1801 Vol. 2 Item	Table 1 Item	Notes
Sight Glasses	Pressure Boundary	Carbon Steel	Lubricating Oil (Internal)	Loss of Material/General, Pitting and Crevice Corrosion	Lubricating Oil Analysis	V.D2-30	3.2.1-16	B
Sight Glasses	Pressure Boundary	Carbon Steel	Lubricating Oil (Internal)	Loss of Material/General, Pitting and Crevice Corrosion	One-Time Inspection	V.D2-30	3.2.1-16	A
Sight Glasses	Pressure Boundary	Glass	Air - Indoor (External)	None	None	V.F-6	3.2.1-52	A
Sight Glasses	Pressure Boundary	Glass	Lubricating Oil (Internal)	None	None	V.F-7	3.2.1-52	A
Sparger	Spray	Carbon Steel	Treated Water (External)	Loss of Material/General, Pitting and Crevice Corrosion	One-Time Inspection	V.D2-33	3.2.1-14	A
Sparger	Spray	Carbon Steel	Treated Water (External)	Loss of Material/General, Pitting and Crevice Corrosion	Water Chemistry	V.D2-33	3.2.1-14	B
Sparger	Spray	Carbon Steel	Treated Water (Internal)	Loss of Material/General, Pitting and Crevice Corrosion	One-Time Inspection	V.D2-33	3.2.1-14	A
Sparger	Spray	Carbon Steel	Treated Water (Internal)	Loss of Material/General, Pitting and Crevice Corrosion	Water Chemistry	V.D2-33	3.2.1-14	B
Strainer	Filter	Carbon Steel	Lubricating Oil (External)	Loss of Material/General, Pitting and Crevice Corrosion	Lubricating Oil Analysis	V.D2-30	3.2.1-16	B
Strainer	Filter	Carbon Steel	Lubricating Oil (External)	Loss of Material/General, Pitting and Crevice Corrosion	One-Time Inspection	V.D2-30	3.2.1-16	A
Strainer	Filter	Carbon Steel	Lubricating Oil (Internal)	Loss of Material/General, Pitting and Crevice Corrosion	Lubricating Oil Analysis	V.D2-30	3.2.1-16	B
Strainer	Filter	Carbon Steel	Lubricating Oil (Internal)	Loss of Material/General, Pitting and Crevice Corrosion	One-Time Inspection	V.D2-30	3.2.1-16	A
Strainer	Filter	Stainless Steel	Treated Water (External)	Loss of Material/Pitting and Crevice Corrosion	One-Time Inspection	V.D2-28	3.2.1-5	A

Table 3.2.2-4 High Pressure Coolant Injection (HPCI) System (Continued)

Component Type	Intended Function	Material	Environment	Aging Effect Requiring Management	Aging Management Programs	NUREG-1801 Vol. 2 Item	Table 1 Item	Notes
Strainer	Filter	Stainless Steel	Treated Water (External)	Loss of Material/Pitting and Crevice Corrosion	Water Chemistry	V.D2-28	3.2.1-5	B
Strainer	Filter	Stainless Steel	Treated Water (Internal)	Loss of Material/Pitting and Crevice Corrosion	One-Time Inspection	V.D2-28	3.2.1-5	A
Strainer	Filter	Stainless Steel	Treated Water (Internal)	Loss of Material/Pitting and Crevice Corrosion	Water Chemistry	V.D2-28	3.2.1-5	B
Strainer	Pressure Boundary	Carbon Steel	Lubricating Oil (External)	Loss of Material/General, Pitting and Crevice Corrosion	Lubricating Oil Analysis	V.D2-30	3.2.1-16	B
Strainer	Pressure Boundary	Carbon Steel	Lubricating Oil (External)	Loss of Material/General, Pitting and Crevice Corrosion	One-Time Inspection	V.D2-30	3.2.1-16	A
Strainer	Pressure Boundary	Carbon Steel	Lubricating Oil (Internal)	Loss of Material/General, Pitting and Crevice Corrosion	Lubricating Oil Analysis	V.D2-30	3.2.1-16	B
Strainer	Pressure Boundary	Carbon Steel	Lubricating Oil (Internal)	Loss of Material/General, Pitting and Crevice Corrosion	One-Time Inspection	V.D2-30	3.2.1-16	A
Strainer	Pressure Boundary	Stainless Steel	Treated Water (External)	Loss of Material/Pitting and Crevice Corrosion	One-Time Inspection	V.D2-28	3.2.1-5	A
Strainer	Pressure Boundary	Stainless Steel	Treated Water (External)	Loss of Material/Pitting and Crevice Corrosion	Water Chemistry	V.D2-28	3.2.1-5	B
Strainer	Pressure Boundary	Stainless Steel	Treated Water (Internal)	Loss of Material/Pitting and Crevice Corrosion	One-Time Inspection	V.D2-28	3.2.1-5	A
Strainer	Pressure Boundary	Stainless Steel	Treated Water (Internal)	Loss of Material/Pitting and Crevice Corrosion	Water Chemistry	V.D2-28	3.2.1-5	B
Strainer Body	Pressure Boundary	Carbon Steel	Air - Indoor (External)	Loss of Material/General Corrosion	External Surfaces Monitoring	V.D2-2	3.2.1-31	A
Strainer Body	Pressure Boundary	Carbon Steel	Lubricating Oil (Internal)	Loss of Material/General, Pitting and Crevice Corrosion	Lubricating Oil Analysis	V.D2-30	3.2.1-16	B
Strainer Body	Pressure Boundary	Carbon Steel	Lubricating Oil (Internal)	Loss of Material/General, Pitting and Crevice Corrosion	One-Time Inspection	V.D2-30	3.2.1-16	A

Table 3.2.2-4 High Pressure Coolant Injection (HPCI) System (Continued)

Component Type	Intended Function	Material	Environment	Aging Effect Requiring Management	Aging Management Programs	NUREG-1801 Vol. 2 Item	Table 1 Item	Notes
Strainer Body	Pressure Boundary	Carbon Steel	Treated Water (Internal)	Loss of Material/General, Pitting and Crevice Corrosion	One-Time Inspection	V.D2-33	3.2.1-14	A
Strainer Body	Pressure Boundary	Carbon Steel	Treated Water (Internal)	Loss of Material/General, Pitting and Crevice Corrosion	Water Chemistry	V.D2-33	3.2.1-14	B
Tank (Turbine Lube Oil Reservoirs)	Pressure Boundary	Gray Cast Iron	Air - Indoor (External)	Loss of Material/General Corrosion	External Surfaces Monitoring	V.E-7	3.2.1-31	A
Tank (Turbine Lube Oil Reservoirs)	Pressure Boundary	Gray Cast Iron	Lubricating Oil (Internal)	Loss of Material/General, Pitting and Crevice Corrosion	Lubricating Oil Analysis	V.D2-30	3.2.1-16	D
Tank (Turbine Lube Oil Reservoirs)	Pressure Boundary	Gray Cast Iron	Lubricating Oil (Internal)	Loss of Material/General, Pitting and Crevice Corrosion	One-Time Inspection	V.D2-30	3.2.1-16	C
Tank (Vacuum Tank)	Leakage Boundary	Carbon Steel	Air - Indoor (External)	Loss of Material/General Corrosion	External Surfaces Monitoring	V.E-7	3.2.1-31	A
Tank (Vacuum Tank)	Leakage Boundary	Carbon Steel	Treated Water (Internal)	Loss of Material/General, Pitting and Crevice Corrosion	One-Time Inspection	V.D2-33	3.2.1-14	C
Tank (Vacuum Tank)	Leakage Boundary	Carbon Steel	Treated Water (Internal)	Loss of Material/General, Pitting and Crevice Corrosion	Water Chemistry	V.D2-33	3.2.1-14	D
Thermowell	Pressure Boundary	Stainless Steel	Air - Indoor (External)	None	None	V.F-12	3.2.1-53	A
Thermowell	Pressure Boundary	Stainless Steel	Lubricating Oil (Internal)	Loss of Material/Pitting and Crevice Corrosion	Lubricating Oil Analysis	V.D1-24	3.2.1-6	B
Thermowell	Pressure Boundary	Stainless Steel	Lubricating Oil (Internal)	Loss of Material/Pitting and Crevice Corrosion	One-Time Inspection	V.D1-24	3.2.1-6	A
Thermowell	Pressure Boundary	Stainless Steel	Treated Water (Internal)	Loss of Material/Pitting and Crevice Corrosion	One-Time Inspection	V.D2-28	3.2.1-5	A
Thermowell	Pressure Boundary	Stainless Steel	Treated Water (Internal)	Loss of Material/Pitting and Crevice Corrosion	Water Chemistry	V.D2-28	3.2.1-5	B
Turbine Casing	Pressure Boundary	Carbon Steel	Air - Indoor (External)	Loss of Material/General Corrosion	External Surfaces Monitoring	V.D2-2	3.2.1-31	A

Table 3.2.2-4 High Pressure Coolant Injection (HPCI) System (Continued)

Component Type	Intended Function	Material	Environment	Aging Effect Requiring Management	Aging Management Programs	NUREG-1801 Vol. 2 Item	Table 1 Item	Notes
Turbine Casing	Pressure Boundary	Carbon Steel	Air/Gas - Wetted (Internal)	Loss of Material/General, Pitting and Crevice Corrosion	Inspection of Internal Surfaces in Miscellaneous Piping and Ducting Components	V.D2-17	3.2.1-34	A
Valve Body	Leakage Boundary	Carbon Steel	Air - Indoor (External)	Loss of Material/General Corrosion	External Surfaces Monitoring	V.D2-2	3.2.1-31	A
Valve Body	Leakage Boundary	Carbon Steel	Air/Gas - Wetted (Internal)	Loss of Material/General, Pitting and Crevice Corrosion	Inspection of Internal Surfaces in Miscellaneous Piping and Ducting Components	V.D2-17	3.2.1-34	A
Valve Body	Leakage Boundary	Carbon Steel	Steam (Internal)	Loss of Material/General, Pitting and Crevice Corrosion	One-Time Inspection	V.D2-33	3.2.1-14	A
Valve Body	Leakage Boundary	Carbon Steel	Steam (Internal)	Loss of Material/General, Pitting and Crevice Corrosion	Water Chemistry	V.D2-33	3.2.1-14	B, 4
Valve Body	Leakage Boundary	Carbon Steel	Steam (Internal)	Wall Thinning/Flow Accelerated Corrosion	Flow-Accelerated Corrosion	V.D2-34	3.2.1-19	B, 7
Valve Body	Leakage Boundary	Carbon Steel	Treated Water (Internal)	Loss of Material/General, Pitting and Crevice Corrosion	One-Time Inspection	V.D2-33	3.2.1-14	A
Valve Body	Leakage Boundary	Carbon Steel	Treated Water (Internal)	Loss of Material/General, Pitting and Crevice Corrosion	Water Chemistry	V.D2-33	3.2.1-14	B, 4
Valve Body	Leakage Boundary	Copper Alloy with 15% Zinc or More	Air - Indoor (External)	None	None	V.F-3	3.2.1-53	A
Valve Body	Leakage Boundary	Copper Alloy with 15% Zinc or More	Treated Water (Internal)	Loss of Material/Pitting, Crevice, and Galvanic Corrosion	One-Time Inspection	VII.A4-7	3.3.1-31	A
Valve Body	Leakage Boundary	Copper Alloy with 15% Zinc or More	Treated Water (Internal)	Loss of Material/Pitting, Crevice, and Galvanic Corrosion	Water Chemistry	VII.A4-7	3.3.1-31	B
Valve Body	Leakage Boundary	Copper Alloy with 15% Zinc or More	Treated Water (Internal)	Loss of Material/Selective Leaching	Selective Leaching of Materials	VII.A4-9	3.3.1-84	A

Table 3.2.2-4 High Pressure Coolant Injection (HPCI) System (Continued)

Component Type	Intended Function	Material	Environment	Aging Effect Requiring Management	Aging Management Programs	NUREG-1801 Vol. 2 Item	Table 1 Item	Notes
Valve Body	Leakage Boundary	Stainless Steel	Air - Indoor (External)	None	None	V.F-12	3.2.1-53	A
Valve Body	Leakage Boundary	Stainless Steel	Air/Gas - Wetted (Internal)	Loss of Material/Pitting and Crevice Corrosion	Periodic Inspection	V.D2-35	3.2.1-8	E, 6
Valve Body	Leakage Boundary	Stainless Steel	Treated Water (Internal)	Loss of Material/Pitting and Crevice Corrosion	One-Time Inspection	V.D2-28	3.2.1-5	A
Valve Body	Leakage Boundary	Stainless Steel	Treated Water (Internal)	Loss of Material/Pitting and Crevice Corrosion	Water Chemistry	V.D2-28	3.2.1-5	B
Valve Body	Pressure Boundary	Carbon Steel	Air - Indoor (External)	Loss of Material/General Corrosion	External Surfaces Monitoring	V.D2-2	3.2.1-31	A
Valve Body	Pressure Boundary	Carbon Steel	Air/Gas - Wetted (Internal)	Loss of Material/General, Pitting and Crevice Corrosion	Inspection of Internal Surfaces in Miscellaneous Piping and Ducting Components	V.D2-17	3.2.1-34	A
Valve Body	Pressure Boundary	Carbon Steel	Lubricating Oil (Internal)	Loss of Material/General, Pitting and Crevice Corrosion	Lubricating Oil Analysis	V.D2-30	3.2.1-16	B
Valve Body	Pressure Boundary	Carbon Steel	Lubricating Oil (Internal)	Loss of Material/General, Pitting and Crevice Corrosion	One-Time Inspection	V.D2-30	3.2.1-16	A
Valve Body	Pressure Boundary	Carbon Steel	Steam (Internal)	Loss of Material/General, Pitting and Crevice Corrosion	One-Time Inspection	V.D2-33	3.2.1-14	A
Valve Body	Pressure Boundary	Carbon Steel	Steam (Internal)	Loss of Material/General, Pitting and Crevice Corrosion	Water Chemistry	V.D2-33	3.2.1-14	B, 4
Valve Body	Pressure Boundary	Carbon Steel	Steam (Internal)	Wall Thinning/Flow Accelerated Corrosion	Flow-Accelerated Corrosion	V.D2-34	3.2.1-19	B, 7
Valve Body	Pressure Boundary	Carbon Steel	Treated Water (Internal)	Loss of Material/General, Pitting and Crevice Corrosion	One-Time Inspection	V.D2-33	3.2.1-14	A
Valve Body	Pressure Boundary	Carbon Steel	Treated Water (Internal)	Loss of Material/General, Pitting and Crevice Corrosion	Water Chemistry	V.D2-33	3.2.1-14	B, 4
Valve Body	Pressure Boundary	Stainless Steel	Air - Indoor (External)	None	None	V.F-12	3.2.1-53	A

Table 3.2.2-4 High Pressure Coolant Injection (HPCI) System (Continued)

Component Type	Intended Function	Material	Environment	Aging Effect Requiring Management	Aging Management Programs	NUREG-1801 Vol. 2 Item	Table 1 Item	Notes
Valve Body	Pressure Boundary	Stainless Steel	Air/Gas - Wetted (Internal)	Loss of Material/Pitting and Crevice Corrosion	Periodic Inspection	V.D2-35	3.2.1-8	E, 6
Valve Body	Pressure Boundary	Stainless Steel	Lubricating Oil (Internal)	Loss of Material/Pitting and Crevice Corrosion	Lubricating Oil Analysis	V.D1-24	3.2.1-6	B
Valve Body	Pressure Boundary	Stainless Steel	Lubricating Oil (Internal)	Loss of Material/Pitting and Crevice Corrosion	One-Time Inspection	V.D1-24	3.2.1-6	A
Valve Body	Pressure Boundary	Stainless Steel	Steam (Internal)	Cracking/Stress Corrosion Cracking	One-Time Inspection	VIII.B2-1	3.4.1-13	A
Valve Body	Pressure Boundary	Stainless Steel	Steam (Internal)	Cracking/Stress Corrosion Cracking	Water Chemistry	VIII.B2-1	3.4.1-13	B
Valve Body	Pressure Boundary	Stainless Steel	Steam (Internal)	Loss of Material/Pitting and Crevice Corrosion	One-Time Inspection	V.D2-28	3.2.1-5	A
Valve Body	Pressure Boundary	Stainless Steel	Steam (Internal)	Loss of Material/Pitting and Crevice Corrosion	Water Chemistry	V.D2-28	3.2.1-5	B
Valve Body	Pressure Boundary	Stainless Steel	Treated Water (Internal) > 140 F	Cracking/Stress Corrosion Cracking	One-Time Inspection	VIII.E-31	3.4.1-14	A
Valve Body	Pressure Boundary	Stainless Steel	Treated Water (Internal) > 140 F	Cracking/Stress Corrosion Cracking	Water Chemistry	VIII.E-31	3.4.1-14	B
Valve Body	Pressure Boundary	Stainless Steel	Treated Water (Internal) > 140 F	Loss of Material/Pitting and Crevice Corrosion	One-Time Inspection	V.D2-28	3.2.1-5	A
Valve Body	Pressure Boundary	Stainless Steel	Treated Water (Internal) > 140 F	Loss of Material/Pitting and Crevice Corrosion	Water Chemistry	V.D2-28	3.2.1-5	B
Valve Body (Class 1)	Pressure Boundary	Carbon Steel	Air - Indoor (External)	Loss of Material/General Corrosion	External Surfaces Monitoring	V.D2-2	3.2.1-31	A
Valve Body (Class 1)	Pressure Boundary	Carbon Steel	Steam (Internal)	Cumulative Fatigue Damage/Fatigue	TLAA	IV.C1-15	3.1.1-3	A, 2
Valve Body (Class 1)	Pressure Boundary	Carbon Steel	Steam (Internal)	Loss of Material/General, Pitting and Crevice Corrosion	One-Time Inspection	IV.C1-6	3.1.1-13	C
Valve Body (Class 1)	Pressure Boundary	Carbon Steel	Steam (Internal)	Loss of Material/General, Pitting and Crevice Corrosion	Water Chemistry	IV.C1-6	3.1.1-13	D, 4

Table 3.2.2-4 High Pressure Coolant Injection (HPCI) System (Continued)

Component Type	Intended Function	Material	Environment	Aging Effect Requiring Management	Aging Management Programs	NUREG-1801 Vol. 2 Item	Table 1 Item	Notes
Valve Body (Class 1)	Pressure Boundary	Carbon Steel	Treated Water (Internal)	Cumulative Fatigue Damage/Fatigue	TLAA	IV.C1-15	3.1.1-3	A, 2
Valve Body (Class 1)	Pressure Boundary	Carbon Steel	Treated Water (Internal)	Loss of Material/General, Pitting and Crevice Corrosion	One-Time Inspection	IV.C1-6	3.1.1-13	C
Valve Body (Class 1)	Pressure Boundary	Carbon Steel	Treated Water (Internal)	Loss of Material/General, Pitting and Crevice Corrosion	Water Chemistry	IV.C1-6	3.1.1-13	D, 4
Valve Body (Class 1)	Pressure Boundary	Stainless Steel	Air - Indoor (External)	None	None	IV.E-2	3.1.1-86	A
Valve Body (Class 1)	Pressure Boundary	Stainless Steel	Steam (Internal)	Cracking/Stress Corrosion Cracking	ASME Section XI Inservice Inspection, Subsections IWB, IWC, and IWD	IV.C1-1	3.1.1-48	E, 5
Valve Body (Class 1)	Pressure Boundary	Stainless Steel	Steam (Internal)	Cracking/Stress Corrosion Cracking	Water Chemistry	IV.C1-1	3.1.1-48	E, 5
Valve Body (Class 1)	Pressure Boundary	Stainless Steel	Steam (Internal)	Loss of Material/Pitting and Crevice Corrosion	One-Time Inspection	IV.C1-14	3.1.1-15	A
Valve Body (Class 1)	Pressure Boundary	Stainless Steel	Steam (Internal)	Loss of Material/Pitting and Crevice Corrosion	Water Chemistry	IV.C1-14	3.1.1-15	B
Valve Body (Class 1)	Pressure Boundary	Stainless Steel	Treated Water (Internal) > 140 F	Cracking/Stress Corrosion Cracking	ASME Section XI Inservice Inspection, Subsections IWB, IWC, and IWD	IV.C1-1	3.1.1-48	E, 5
Valve Body (Class 1)	Pressure Boundary	Stainless Steel	Treated Water (Internal) > 140 F	Cracking/Stress Corrosion Cracking	Water Chemistry	IV.C1-1	3.1.1-48	E, 5
Valve Body (Class 1)	Pressure Boundary	Stainless Steel	Treated Water (Internal) > 140 F	Loss of Material/Pitting and Crevice Corrosion	One-Time Inspection	IV.C1-14	3.1.1-15	A
Valve Body (Class 1)	Pressure Boundary	Stainless Steel	Treated Water (Internal) > 140 F	Loss of Material/Pitting and Crevice Corrosion	Water Chemistry	IV.C1-14	3.1.1-15	B

Notes	Definition of Note
A	Consistent with NUREG-1801 item for component, material, environment, and aging effect. AMP is consistent with NUREG-1801 AMP.
B	Consistent with NUREG-1801 item for component, material, environment, and aging effect. AMP takes some exceptions to NUREG-1801 AMP.
C	Component is different, but consistent with NUREG-1801 item for material, environment, and aging effect. AMP is consistent with NUREG-1801 AMP.
D	Component is different, but consistent with NUREG-1801 item for material, environment, and aging effect. AMP takes some exceptions to NUREG-1801 AMP.
E	Consistent with NUREG-1801 item for material, environment and aging effect, but a different aging management program is credited or NUREG-1801 identifies a plant-specific aging management program.
F	Material not in NUREG-1801 for this component.
G	Environment not in NUREG-1801 for this component and material.
H	Aging effect not in NUREG-1801 for this component, material and environment combination.
I	Aging effect in NUREG-1801 for this component, material and environment combination is not applicable.
J	Neither the component nor the material and environment combination is evaluated in NUREG-1801.

Plant Specific Notes:

1. The aging effects for closure bolting in a treated water environment include loss of material and loss of preload. Loss of preload is managed through the Bolting Integrity aging management program. Loss of material for bolting in a submerged environment is managed in conjunction with the Water Chemistry and One Time Inspection aging management programs.

2. The TLAA designation in the Aging Management Program column indicates fatigue of this component is evaluated in Section 4.3.

3. The NUREG-1801 "One-Time Inspection of ASME Code Class 1 Small-Bore Piping" aging management program is applicable only to plants that have not experienced cracking of ASME Code Class 1 small-bore piping. Based on previous Hope Creek operating experience with Class 1 small-bore pipe cracking, a new plant-specific periodic inspection program will be used. The "Small-Bore Class 1 Piping Inspection" aging management program is a plant-specific periodic program that will be implemented to manage cracking by periodic volumetric examinations of small-bore Class 1 piping.

4. Line Item IV.C1-7 and V.D2-31 for flow-accelerated corrosion is not an applicable aging mechanism as this system is normally in standby except for the HPCI drain line.

5. The Water Chemistry and ASME Section XI In-service Inspection, Subsections IWB, IWC, and IWD aging management programs will be used to manage the aging effect of cracking in condensing chambers, valve bodies and restricting orifices < NPS 4.

6. NUREG-1801 specifies a plant-specific program. The Periodic Inspection program is used to manage the aging effect(s) applicable to this component type, material, and environment combination.

7. According to station procedure, the HPCI Drain lines are susceptible to FAC and are included in the scope of the Flow accelerated Corrosion Program.

Table 3.2.2-5
Hydrogen and Oxygen Analyzer System
Summary of Aging Management Evaluation

Table 3.2.2-5 Hydrogen and Oxygen Analyzer System

Component Type	Intended Function	Material	Environment	Aging Effect Requiring Management	Aging Management Programs	NUREG-1801 Vol. 2 Item	Table 1 Item	Notes
Bolting	Mechanical Closure	Carbon and Low Alloy Steel Bolting	Air - Indoor (External)	Loss of Material/General, Pitting and Crevice Corrosion	Bolting Integrity	V.E-4	3.2.1-23	B
Bolting	Mechanical Closure	Carbon and Low Alloy Steel Bolting	Air - Indoor (External)	Loss of Preload/Thermal Effects, Gasket Creep, and Self-Loosening	Bolting Integrity	V.E-5	3.2.1-24	B
Bolting	Mechanical Closure	Carbon and Low Alloy Steel Bolting	Air - Outdoor (External)	Loss of Material/General, Pitting and Crevice Corrosion	Bolting Integrity	V.E-1	3.2.1-23	B
Bolting	Mechanical Closure	Carbon and Low Alloy Steel Bolting	Air - Outdoor (External)	Loss of Preload/Thermal Effects, Gasket Creep, and Self-Loosening	Bolting Integrity	IV.C1-10	3.1.1-52	B
Filter Housing	Pressure Boundary	Stainless Steel	Air - Indoor (External)	None	None	V.F-12	3.2.1-53	A
Filter Housing	Pressure Boundary	Stainless Steel	Air/Gas - Wetted (Internal)	Loss of Material/Pitting and Crevice Corrosion	Periodic Inspection	V.D2-35	3.2.1-8	E, 1
Flow Device	Pressure Boundary	Glass	Air - Indoor (External)	None	None	V.F-6	3.2.1-52	A
Flow Device	Pressure Boundary	Glass	Air/Gas - Wetted (Internal)	None	None	VII.J-7	3.3.1-93	A
Flow Device	Pressure Boundary	Stainless Steel	Air - Indoor (External)	None	None	V.F-12	3.2.1-53	A
Flow Device	Pressure Boundary	Stainless Steel	Air/Gas - Wetted (Internal)	Loss of Material/Pitting and Crevice Corrosion	Periodic Inspection	V.D2-35	3.2.1-8	E, 1
Heat Exchanger Components (Air Cooled - H2O2 Analyzer)	Heat Transfer	Stainless Steel (Tubes)	Air - Indoor (External)	Reduction of Heat Transfer/Fouling	Periodic Inspection			G, 2

Table 3.2.2-5 Hydrogen and Oxygen Analyzer System (Continued)

Component Type	Intended Function	Material	Environment	Aging Effect Requiring Management	Aging Management Programs	NUREG-1801 Vol. 2 Item	Table 1 Item	Notes
Heat Exchanger Components (Air Cooled - H2O2 Analyzer)	Heat Transfer	Stainless Steel (Tubes)	Air/Gas - Wetted (Internal)	Reduction of Heat Transfer/Fouling	Periodic Inspection			H, 2
Heat Exchanger Components (Air Cooled - H2O2 Analyzer)	Pressure Boundary	Stainless Steel (Tubes)	Air - Indoor (External)	None	None	V.F-12	3.2.1-53	C
Heat Exchanger Components (Air Cooled - H2O2 Analyzer)	Pressure Boundary	Stainless Steel (Tubes)	Air/Gas - Wetted (Internal)	Loss of Material/Pitting and Crevice Corrosion	Periodic Inspection	V.D2-35	3.2.1-8	E, 1
Piping and Fittings	Pressure Boundary	Stainless Steel	Air - Indoor (External)	None	None	V.F-12	3.2.1-53	A
Piping and Fittings	Pressure Boundary	Stainless Steel	Air - Outdoor (External)	Loss of Material/Pitting and Crevice Corrosion	Periodic Inspection	III.B2-7	3.5.1-50	E, 3
Piping and Fittings	Pressure Boundary	Stainless Steel	Air/Gas - Dry (Internal)	None	None	V.F-15	3.2.1-56	A
Piping and Fittings	Pressure Boundary	Stainless Steel	Air/Gas - Wetted (Internal)	Loss of Material/Pitting and Crevice Corrosion	Periodic Inspection	V.D2-35	3.2.1-8	E, 1
Pump Casing (H2O2 Analyzer)	Pressure Boundary	Stainless Steel	Air - Indoor (External)	None	None	V.F-12	3.2.1-53	A
Pump Casing (H2O2 Analyzer)	Pressure Boundary	Stainless Steel	Air/Gas - Wetted (Internal)	Loss of Material/Pitting and Crevice Corrosion	Periodic Inspection	V.D2-35	3.2.1-8	E, 1
Restricting Orifices	Pressure Boundary	Stainless Steel	Air - Indoor (External)	None	None	V.F-12	3.2.1-53	A
Restricting Orifices	Pressure Boundary	Stainless Steel	Air/Gas - Wetted (Internal)	Loss of Material/Pitting and Crevice Corrosion	Periodic Inspection	V.D2-35	3.2.1-8	E, 1
Restricting Orifices	Throttle	Stainless Steel	Air - Indoor (External)	None	None	V.F-12	3.2.1-53	A
Restricting Orifices	Throttle	Stainless Steel	Air/Gas - Wetted (Internal)	Loss of Material/Pitting and Crevice Corrosion	Periodic Inspection	V.D2-35	3.2.1-8	E, 1
Valve Body	Pressure Boundary	Stainless Steel	Air - Indoor (External)	None	None	V.F-12	3.2.1-53	A
Valve Body	Pressure Boundary	Stainless Steel	Air/Gas - Wetted (Internal)	Loss of Material/Pitting and Crevice Corrosion	Periodic Inspection	V.D2-35	3.2.1-8	E, 1

Notes	Definition of Note
A	Consistent with NUREG-1801 item for component, material, environment, and aging effect. AMP is consistent with NUREG-1801 AMP.
B	Consistent with NUREG-1801 item for component, material, environment, and aging effect. AMP takes some exceptions to NUREG-1801 AMP.
C	Component is different, but consistent with NUREG-1801 item for material, environment, and aging effect. AMP is consistent with NUREG-1801 AMP.
D	Component is different, but consistent with NUREG-1801 item for material, environment, and aging effect. AMP takes some exceptions to NUREG-1801 AMP.
E	Consistent with NUREG-1801 item for material, environment and aging effect, but a different aging management program is credited or NUREG-1801 identifies a plant-specific aging management program.
F	Material not in NUREG-1801 for this component.
G	Environment not in NUREG-1801 for this component and material.
H	Aging effect not in NUREG-1801 for this component, material and environment combination.
I	Aging effect in NUREG-1801 for this component, material and environment combination is not applicable.
J	Neither the component nor the material and environment combination is evaluated in NUREG-1801.

Plant Specific Notes:

1. NUREG-1801 specifies a plant-specific program. The Periodic Inspection program is used to manage the aging effect(s) applicable to this component type, material, and environment combination.

2. The Periodic Inspection aging management program will be used to manage the identified aging effects for this component type, material and environment combination.

3. The Periodic Inspection program is substituted to manage the aging effect(s) applicable to this component type, material, and environment combination.

Table 3.2.2-6
Reactor Core Isolation Cooling (RCIC) System
Summary of Aging Management Evaluation

Table 3.2.2-6 Reactor Core Isolation Cooling (RCIC) System

Component Type	Intended Function	Material	Environment	Aging Effect Requiring Management	Aging Management Programs	NUREG-1801 Vol. 2 Item	Table 1 Item	Notes
Bolting	Mechanical Closure	Carbon and Low Alloy Steel Bolting	Air - Indoor (External)	Loss of Material/General, Pitting and Crevice Corrosion	Bolting Integrity	V.E-4	3.2.1-23	B
Bolting	Mechanical Closure	Carbon and Low Alloy Steel Bolting	Air - Indoor (External)	Loss of Preload/Thermal Effects, Gasket Creep, and Self-Loosening	Bolting Integrity	V.E-5	3.2.1-24	B
Bolting	Mechanical Closure	Stainless Steel Bolting	Treated Water (External)	Loss of Material/Pitting and Crevice Corrosion	Bolting Integrity			G, 1
Bolting	Mechanical Closure	Stainless Steel Bolting	Treated Water (External)	Loss of Preload/Thermal Effects, Gasket Creep, and Self-Loosening	Bolting Integrity			G, 1
Bolting (Class 1)	Mechanical Closure	Carbon and Low Alloy Steel Bolting	Air - Indoor (External)	Cumulative Fatigue Damage/Fatigue	TLAA	IV.C1-11	3.1.1-4	A, 2
Bolting (Class 1)	Mechanical Closure	Carbon and Low Alloy Steel Bolting	Air - Indoor (External)	Loss of Material/General, Pitting and Crevice Corrosion	Bolting Integrity	V.E-4	3.2.1-23	B
Bolting (Class 1)	Mechanical Closure	Carbon and Low Alloy Steel Bolting	Air - Indoor (External)	Loss of Preload/Thermal Effects, Gasket Creep, and Self-Loosening	Bolting Integrity	IV.C1-10	3.1.1-52	B
Class 1 Piping, Fittings and Branch Connections < NPS 4"	Pressure Boundary	Carbon Steel	Air - Indoor (External)	Loss of Material/General Corrosion	External Surfaces Monitoring	V.D2-2	3.2.1-31	A
Class 1 Piping, Fittings and Branch Connections < NPS 4"	Pressure Boundary	Carbon Steel	Steam (Internal)	Cracking/Thermal and Mechanical Loading	ASME Section XI Inservice Inspection, Subsections IWB, IWC, and IWD	IV.C1-1	3.1.1-48	A

Table 3.2.2-6 Reactor Core Isolation Cooling (RCIC) System (Continued)

Component Type	Intended Function	Material	Environment	Aging Effect Requiring Management	Aging Management Programs	NUREG-1801 Vol. 2 Item	Table 1 Item	Notes
Class 1 Piping, Fittings and Branch Connections < NPS 4"	Pressure Boundary	Carbon Steel	Steam (Internal)	Cracking/Thermal and Mechanical Loading	Small-Bore Class 1 Piping Inspection	IV.C1-1	3.1.1-48	E, 3
Class 1 Piping, Fittings and Branch Connections < NPS 4"	Pressure Boundary	Carbon Steel	Steam (Internal)	Cracking/Thermal and Mechanical Loading	Water Chemistry	IV.C1-1	3.1.1-48	B
Class 1 Piping, Fittings and Branch Connections < NPS 4"	Pressure Boundary	Carbon Steel	Steam (Internal)	Cumulative Fatigue Damage/Fatigue	TLAA	IV.C1-15	3.1.1-3	A, 2
Class 1 Piping, Fittings and Branch Connections < NPS 4"	Pressure Boundary	Carbon Steel	Steam (Internal)	Loss of Material/Galvanic Corrosion	One-Time Inspection	VIII.E-7	3.4.1-5	C
Class 1 Piping, Fittings and Branch Connections < NPS 4"	Pressure Boundary	Carbon Steel	Steam (Internal)	Loss of Material/Galvanic Corrosion	Water Chemistry	VIII.E-7	3.4.1-5	D
Class 1 Piping, Fittings and Branch Connections < NPS 4"	Pressure Boundary	Carbon Steel	Steam (Internal)	Loss of Material/General, Pitting and Crevice Corrosion	One-Time Inspection	IV.C1-6	3.1.1-13	C
Class 1 Piping, Fittings and Branch Connections < NPS 4"	Pressure Boundary	Carbon Steel	Steam (Internal)	Loss of Material/General, Pitting and Crevice Corrosion	Water Chemistry	IV.C1-6	3.1.1-13	D, 4
Class 1 Piping, Fittings and Branch Connections < NPS 4"	Pressure Boundary	Carbon Steel	Treated Water (Internal)	Cracking/Thermal and Mechanical Loading	ASME Section XI Inservice Inspection, Subsections IWB, IWC, and IWD	IV.C1-1	3.1.1-48	A
Class 1 Piping, Fittings and Branch Connections < NPS 4"	Pressure Boundary	Carbon Steel	Treated Water (Internal)	Cracking/Thermal and Mechanical Loading	Small-Bore Class 1 Piping Inspection	IV.C1-1	3.1.1-48	E, 3

Table 3.2.2-6 Reactor Core Isolation Cooling (RCIC) System (Continued)

Component Type	Intended Function	Material	Environment	Aging Effect Requiring Management	Aging Management Programs	NUREG-1801 Vol. 2 Item	Table 1 Item	Notes
Class 1 Piping, Fittings and Branch Connections < NPS 4"	Pressure Boundary	Carbon Steel	Treated Water (Internal)	Cracking/Thermal and Mechanical Loading	Water Chemistry	IV.C1-1	3.1.1-48	B
Class 1 Piping, Fittings and Branch Connections < NPS 4"	Pressure Boundary	Carbon Steel	Treated Water (Internal)	Cumulative Fatigue Damage/Fatigue	TLAA	IV.C1-15	3.1.1-3	A, 2
Class 1 Piping, Fittings and Branch Connections < NPS 4"	Pressure Boundary	Carbon Steel	Treated Water (Internal)	Loss of Material/General, Pitting and Crevice Corrosion	One-Time Inspection	IV.C1-6	3.1.1-13	C
Class 1 Piping, Fittings and Branch Connections < NPS 4"	Pressure Boundary	Carbon Steel	Treated Water (Internal)	Loss of Material/General, Pitting and Crevice Corrosion	Water Chemistry	IV.C1-6	3.1.1-13	D, 4
Class 1 Piping, Fittings and Branch Connections < NPS 4"	Pressure Boundary	Stainless Steel	Air - Indoor (External)	None	None	IV.E-2	3.1.1-86	A
Class 1 Piping, Fittings and Branch Connections < NPS 4"	Pressure Boundary	Stainless Steel	Steam (Internal)	Cracking/Stress Corrosion Cracking, Thermal and Mechanical Loading	ASME Section XI Inservice Inspection, Subsections IWB, IWC, and IWD	IV.C1-1	3.1.1-48	A
Class 1 Piping, Fittings and Branch Connections < NPS 4"	Pressure Boundary	Stainless Steel	Steam (Internal)	Cracking/Stress Corrosion Cracking, Thermal and Mechanical Loading	Small-Bore Class 1 Piping Inspection	IV.C1-1	3.1.1-48	E, 3
Class 1 Piping, Fittings and Branch Connections < NPS 4"	Pressure Boundary	Stainless Steel	Steam (Internal)	Cracking/Stress Corrosion Cracking, Thermal and Mechanical Loading	Water Chemistry	IV.C1-1	3.1.1-48	B
Class 1 Piping, Fittings and Branch Connections < NPS 4"	Pressure Boundary	Stainless Steel	Steam (Internal)	Cumulative Fatigue Damage/Fatigue	TLAA	IV.C1-15	3.1.1-3	A, 2

Table 3.2.2-6 Reactor Core Isolation Cooling (RCIC) System (Continued)

Component Type	Intended Function	Material	Environment	Aging Effect Requiring Management	Aging Management Programs	NUREG-1801 Vol. 2 Item	Table 1 Item	Notes
Class 1 Piping, Fittings and Branch Connections < NPS 4"	Pressure Boundary	Stainless Steel	Steam (Internal)	Loss of Material/Pitting and Crevice Corrosion	One-Time Inspection	IV.C1-14	3.1.1-15	A
Class 1 Piping, Fittings and Branch Connections < NPS 4"	Pressure Boundary	Stainless Steel	Steam (Internal)	Loss of Material/Pitting and Crevice Corrosion	Water Chemistry	IV.C1-14	3.1.1-15	B
Class 1 Piping, Fittings and Branch Connections < NPS 4"	Pressure Boundary	Stainless Steel	Treated Water (Internal) > 140 F	Cracking/Stress Corrosion Cracking, Thermal and Mechanical Loading	ASME Section XI Inservice Inspection, Subsections IWB, IWC, and IWD	IV.C1-1	3.1.1-48	A
Class 1 Piping, Fittings and Branch Connections < NPS 4"	Pressure Boundary	Stainless Steel	Treated Water (Internal) > 140 F	Cracking/Stress Corrosion Cracking, Thermal and Mechanical Loading	Small-Bore Class 1 Piping Inspection	IV.C1-1	3.1.1-48	E, 3
Class 1 Piping, Fittings and Branch Connections < NPS 4"	Pressure Boundary	Stainless Steel	Treated Water (Internal) > 140 F	Cracking/Stress Corrosion Cracking, Thermal and Mechanical Loading	Water Chemistry	IV.C1-1	3.1.1-48	B
Class 1 Piping, Fittings and Branch Connections < NPS 4"	Pressure Boundary	Stainless Steel	Treated Water (Internal) > 140 F	Cumulative Fatigue Damage/Fatigue	TLAA	IV.C1-15	3.1.1-3	A, 2
Class 1 Piping, Fittings and Branch Connections < NPS 4"	Pressure Boundary	Stainless Steel	Treated Water (Internal) > 140 F	Loss of Material/Pitting and Crevice Corrosion	One-Time Inspection	IV.C1-14	3.1.1-15	A
Class 1 Piping, Fittings and Branch Connections < NPS 4"	Pressure Boundary	Stainless Steel	Treated Water (Internal) > 140 F	Loss of Material/Pitting and Crevice Corrosion	Water Chemistry	IV.C1-14	3.1.1-15	B
Drain Traps	Leakage Boundary	Carbon Steel	Air - Indoor (External)	Loss of Material/General Corrosion	External Surfaces Monitoring	V.D2-2	3.2.1-31	A

Table 3.2.2-6 Reactor Core Isolation Cooling (RCIC) System (Continued)

Component Type	Intended Function	Material	Environment	Aging Effect Requiring Management	Aging Management Programs	NUREG-1801 Vol. 2 Item	Table 1 Item	Notes
Drain Traps	Leakage Boundary	Carbon Steel	Treated Water (Internal)	Loss of Material/General, Pitting and Crevice Corrosion	One-Time Inspection	V.D2-33	3.2.1-14	A
Drain Traps	Leakage Boundary	Carbon Steel	Treated Water (Internal)	Loss of Material/General, Pitting and Crevice Corrosion	Water Chemistry	V.D2-33	3.2.1-14	B
Filter Housing	Pressure Boundary	Carbon Steel	Air - Indoor (External)	Loss of Material/General Corrosion	External Surfaces Monitoring	V.D2-2	3.2.1-31	A
Filter Housing	Pressure Boundary	Carbon Steel	Lubricating Oil (Internal)	Loss of Material/General, Pitting and Crevice Corrosion	Lubricating Oil Analysis	V.D2-30	3.2.1-16	B
Filter Housing	Pressure Boundary	Carbon Steel	Lubricating Oil (Internal)	Loss of Material/General, Pitting and Crevice Corrosion	One-Time Inspection	V.D2-30	3.2.1-16	A
Flow Element	Pressure Boundary	Stainless Steel	Air - Indoor (External)	None	None	V.F-12	3.2.1-53	A
Flow Element	Pressure Boundary	Stainless Steel	Treated Water (Internal)	Loss of Material/Pitting and Crevice Corrosion	One-Time Inspection	V.D2-28	3.2.1-5	A
Flow Element	Pressure Boundary	Stainless Steel	Treated Water (Internal)	Loss of Material/Pitting and Crevice Corrosion	Water Chemistry	V.D2-28	3.2.1-5	B
Flow Element (Class 1)	Pressure Boundary	Carbon Steel	Air - Indoor (External)	Loss of Material/General Corrosion	External Surfaces Monitoring	V.D2-2	3.2.1-31	A
Flow Element (Class 1)	Pressure Boundary	Carbon Steel	Steam (Internal)	Loss of Material/General, Pitting and Crevice Corrosion	One-Time Inspection	IV.C1-6	3.1.1-13	C
Flow Element (Class 1)	Pressure Boundary	Carbon Steel	Steam (Internal)	Loss of Material/General, Pitting and Crevice Corrosion	Water Chemistry	IV.C1-6	3.1.1-13	D
Flow Element (Class 1)	Pressure Boundary	Stainless Steel	Air - Indoor (External)	None	None	IV.E-2	3.1.1-86	A
Flow Element (Class 1)	Pressure Boundary	Stainless Steel	Steam (Internal)	Cracking/Stress Corrosion Cracking	BWR Stress Corrosion Cracking	V.D2-29	3.2.1-18	A
Flow Element (Class 1)	Pressure Boundary	Stainless Steel	Steam (Internal)	Cracking/Stress Corrosion Cracking	Water Chemistry	V.D2-29	3.2.1-18	B

Table 3.2.2-6 Reactor Core Isolation Cooling (RCIC) System (Continued)

Component Type	Intended Function	Material	Environment	Aging Effect Requiring Management	Aging Management Programs	NUREG-1801 Vol. 2 Item	Table 1 Item	Notes
Flow Element (Class 1)	Pressure Boundary	Stainless Steel	Steam (Internal)	Loss of Material/Pitting and Crevice Corrosion	One-Time Inspection	IV.C1-14	3.1.1-15	A
Flow Element (Class 1)	Pressure Boundary	Stainless Steel	Steam (Internal)	Loss of Material/Pitting and Crevice Corrosion	Water Chemistry	IV.C1-14	3.1.1-15	B
Heat Exchanger Components (Lube Oil Cooler)	Heat Transfer	Copper Alloy with 15% Zinc or More (Tubes)	Lubricating Oil (External)	Reduction of Heat Transfer/Fouling	Lubricating Oil Analysis	V.D2-9	3.2.1-9	B
Heat Exchanger Components (Lube Oil Cooler)	Heat Transfer	Copper Alloy with 15% Zinc or More (Tubes)	Lubricating Oil (External)	Reduction of Heat Transfer/Fouling	One-Time Inspection	V.D2-9	3.2.1-9	A
Heat Exchanger Components (Lube Oil Cooler)	Heat Transfer	Copper Alloy with 15% Zinc or More (Tubes)	Treated Water (Internal)	Reduction of Heat Transfer/Fouling	One-Time Inspection	VIII.E-10	3.4.1-9	A
Heat Exchanger Components (Lube Oil Cooler)	Heat Transfer	Copper Alloy with 15% Zinc or More (Tubes)	Treated Water (Internal)	Reduction of Heat Transfer/Fouling	Water Chemistry	VIII.E-10	3.4.1-9	B
Heat Exchanger Components (Lube Oil Cooler)	Pressure Boundary	Copper Alloy with 15% Zinc or More (Shell Side Components)	Air - Indoor (External)	None	None	V.F-3	3.2.1-53	C
Heat Exchanger Components (Lube Oil Cooler)	Pressure Boundary	Copper Alloy with 15% Zinc or More (Shell Side Components)	Lubricating Oil (Internal)	Loss of Material/Pitting and Crevice Corrosion	Lubricating Oil Analysis	V.D2-22	3.2.1-6	D
Heat Exchanger Components (Lube Oil Cooler)	Pressure Boundary	Copper Alloy with 15% Zinc or More (Shell Side Components)	Lubricating Oil (Internal)	Loss of Material/Pitting and Crevice Corrosion	One-Time Inspection	V.D2-22	3.2.1-6	C
Heat Exchanger Components (Lube Oil Cooler)	Pressure Boundary	Copper Alloy with 15% Zinc or More (Tubes)	Lubricating Oil (External)	Loss of Material/Pitting and Crevice Corrosion	Lubricating Oil Analysis	V.D2-22	3.2.1-6	D
Heat Exchanger Components (Lube Oil Cooler)	Pressure Boundary	Copper Alloy with 15% Zinc or More (Tubes)	Lubricating Oil (External)	Loss of Material/Pitting and Crevice Corrosion	One-Time Inspection	V.D2-22	3.2.1-6	C

Table 3.2.2-6 Reactor Core Isolation Cooling (RCIC) System (Continued)

Component Type	Intended Function	Material	Environment	Aging Effect Requiring Management	Aging Management Programs	NUREG-1801 Vol. 2 Item	Table 1 Item	Notes
Heat Exchanger Components (Lube Oil Cooler)	Pressure Boundary	Copper Alloy with 15% Zinc or More (Tubes)	Treated Water (Internal)	Loss of Material/Pitting, Crevice, and Galvanic Corrosion	One-Time Inspection	VII.A4-7	3.3.1-31	C
Heat Exchanger Components (Lube Oil Cooler)	Pressure Boundary	Copper Alloy with 15% Zinc or More (Tubes)	Treated Water (Internal)	Loss of Material/Pitting, Crevice, and Galvanic Corrosion	Water Chemistry	VII.A4-7	3.3.1-31	D
Heat Exchanger Components (Lube Oil Cooler)	Pressure Boundary	Copper Alloy with 15% Zinc or More (Tubes)	Treated Water (Internal)	Loss of Material/Selective Leaching	Selective Leaching of Materials	VII.F1-9	3.3.1-84	A
Heat Exchanger Components (Lube Oil Cooler)	Pressure Boundary	Copper Alloy with less than 15% Zinc (Tube Side Components)	Air - Indoor (External)	None	None	V.F-3	3.2.1-53	C
Heat Exchanger Components (Lube Oil Cooler)	Pressure Boundary	Copper Alloy with less than 15% Zinc (Tube Side Components)	Treated Water (Internal)	Loss of Material/Pitting and Crevice Corrosion	One-Time Inspection	VIII.A-5	3.4.1-15	C
Heat Exchanger Components (Lube Oil Cooler)	Pressure Boundary	Copper Alloy with less than 15% Zinc (Tube Side Components)	Treated Water (Internal)	Loss of Material/Pitting and Crevice Corrosion	Water Chemistry	VIII.A-5	3.4.1-15	D
Heat Exchanger Components (Lube Oil Cooler)	Pressure Boundary	Copper Alloy with less than 15% Zinc (Tubesheet)	Lubricating Oil (Internal)	Loss of Material/Pitting and Crevice Corrosion	Lubricating Oil Analysis	V.D2-22	3.2.1-6	D
Heat Exchanger Components (Lube Oil Cooler)	Pressure Boundary	Copper Alloy with less than 15% Zinc (Tubesheet)	Lubricating Oil (Internal)	Loss of Material/Pitting and Crevice Corrosion	One-Time Inspection	V.D2-22	3.2.1-6	C
Heat Exchanger Components (Lube Oil Cooler)	Pressure Boundary	Copper Alloy with less than 15% Zinc (Tubesheet)	Treated Water (Internal)	Loss of Material/Pitting and Crevice Corrosion	One-Time Inspection	VIII.A-5	3.4.1-15	C
Heat Exchanger Components (Lube Oil Cooler)	Pressure Boundary	Copper Alloy with less than 15% Zinc (Tubesheet)	Treated Water (Internal)	Loss of Material/Pitting and Crevice Corrosion	Water Chemistry	VIII.A-5	3.4.1-15	D
Hoses	Pressure Boundary	Stainless Steel	Air - Indoor (External)	None	None	V.F-12	3.2.1-53	A

Table 3.2.2-6 Reactor Core Isolation Cooling (RCIC) System (Continued)

Component Type	Intended Function	Material	Environment	Aging Effect Requiring Management	Aging Management Programs	NUREG-1801 Vol. 2 Item	Table 1 Item	Notes
Hoses	Pressure Boundary	Stainless Steel	Air/Gas - Wetted (Internal)	Loss of Material/Pitting and Crevice Corrosion	Periodic Inspection	V.D2-35	3.2.1-8	E, 5
Piping and Fittings	Leakage Boundary	Carbon Steel	Air - Indoor (External)	Loss of Material/General Corrosion	External Surfaces Monitoring	V.D2-2	3.2.1-31	A
Piping and Fittings	Leakage Boundary	Carbon Steel	Air/Gas - Wetted (Internal)	Loss of Material/General, Pitting and Crevice Corrosion	Inspection of Internal Surfaces in Miscellaneous Piping and Ducting Components	V.D2-17	3.2.1-34	A
Piping and Fittings	Leakage Boundary	Carbon Steel	Steam (Internal)	Loss of Material/General, Pitting and Crevice Corrosion	One-Time Inspection	V.D2-33	3.2.1-14	A
Piping and Fittings	Leakage Boundary	Carbon Steel	Steam (Internal)	Loss of Material/General, Pitting and Crevice Corrosion	Water Chemistry	V.D2-33	3.2.1-14	B, 4
Piping and Fittings	Leakage Boundary	Carbon Steel	Steam (Internal)	Wall Thinning/Flow Accelerated Corrosion	Flow-Accelerated Corrosion	V.D2-34	3.2.1-19	B, 7
Piping and Fittings	Leakage Boundary	Carbon Steel	Treated Water (Internal)	Loss of Material/General, Pitting and Crevice Corrosion	One-Time Inspection	V.D2-33	3.2.1-14	A
Piping and Fittings	Leakage Boundary	Carbon Steel	Treated Water (Internal)	Loss of Material/General, Pitting and Crevice Corrosion	Water Chemistry	V.D2-33	3.2.1-14	B, 4
Piping and Fittings	Leakage Boundary	Stainless Steel	Air - Indoor (External)	None	None	V.F-12	3.2.1-53	A
Piping and Fittings	Leakage Boundary	Stainless Steel	Air/Gas - Wetted (Internal)	Loss of Material/Pitting and Crevice Corrosion	Periodic Inspection	V.D2-35	3.2.1-8	E, 5
Piping and Fittings	Leakage Boundary	Stainless Steel	Treated Water (Internal)	Loss of Material/Pitting and Crevice Corrosion	One-Time Inspection	V.D2-28	3.2.1-5	A
Piping and Fittings	Leakage Boundary	Stainless Steel	Treated Water (Internal)	Loss of Material/Pitting and Crevice Corrosion	Water Chemistry	V.D2-28	3.2.1-5	B
Piping and Fittings	Pressure Boundary	Carbon Steel	Air - Indoor (External)	Loss of Material/General Corrosion	External Surfaces Monitoring	V.D2-2	3.2.1-31	A

Table 3.2.2-6 Reactor Core Isolation Cooling (RCIC) System (Continued)

Component Type	Intended Function	Material	Environment	Aging Effect Requiring Management	Aging Management Programs	NUREG-1801 Vol. 2 Item	Table 1 Item	Notes
Piping and Fittings	Pressure Boundary	Carbon Steel	Air/Gas - Wetted (Internal)	Loss of Material/General, Pitting and Crevice Corrosion	Inspection of Internal Surfaces in Miscellaneous Piping and Ducting Components	V.D2-17	3.2.1-34	A
Piping and Fittings	Pressure Boundary	Carbon Steel	Lubricating Oil (Internal)	Loss of Material/General, Pitting and Crevice Corrosion	Lubricating Oil Analysis	V.D2-30	3.2.1-16	B
Piping and Fittings	Pressure Boundary	Carbon Steel	Lubricating Oil (Internal)	Loss of Material/General, Pitting and Crevice Corrosion	One-Time Inspection	V.D2-30	3.2.1-16	A
Piping and Fittings	Pressure Boundary	Carbon Steel	Steam (Internal)	Cumulative Fatigue Damage/Fatigue	TLAA	V.D2-32	3.2.1-1	A, 2
Piping and Fittings	Pressure Boundary	Carbon Steel	Steam (Internal)	Loss of Material/General, Pitting and Crevice Corrosion	One-Time Inspection	V.D2-33	3.2.1-14	A
Piping and Fittings	Pressure Boundary	Carbon Steel	Steam (Internal)	Loss of Material/General, Pitting and Crevice Corrosion	Water Chemistry	V.D2-33	3.2.1-14	B, 4
Piping and Fittings	Pressure Boundary	Carbon Steel	Steam (Internal)	Wall Thinning/Flow Accelerated Corrosion	Flow-Accelerated Corrosion	V.D2-34	3.2.1-19	B, 7
Piping and Fittings	Pressure Boundary	Carbon Steel	Treated Water (External)	Loss of Material/General, Pitting and Crevice Corrosion	One-Time Inspection	V.D2-33	3.2.1-14	A
Piping and Fittings	Pressure Boundary	Carbon Steel	Treated Water (External)	Loss of Material/General, Pitting and Crevice Corrosion	Water Chemistry	V.D2-33	3.2.1-14	B, 4
Piping and Fittings	Pressure Boundary	Carbon Steel	Treated Water (Internal)	Loss of Material/General, Pitting and Crevice Corrosion	One-Time Inspection	V.D2-33	3.2.1-14	A
Piping and Fittings	Pressure Boundary	Carbon Steel	Treated Water (Internal)	Loss of Material/General, Pitting and Crevice Corrosion	Water Chemistry	V.D2-33	3.2.1-14	B, 4
Piping and Fittings	Pressure Boundary	Stainless Steel	Air - Indoor (External)	None	None	V.F-12	3.2.1-53	A

Table 3.2.2-6 Reactor Core Isolation Cooling (RCIC) System (Continued)

Component Type	Intended Function	Material	Environment	Aging Effect Requiring Management	Aging Management Programs	NUREG-1801 Vol. 2 Item	Table 1 Item	Notes
Piping and Fittings	Pressure Boundary	Stainless Steel	Air/Gas - Wetted (Internal)	Loss of Material/Pitting and Crevice Corrosion	Periodic Inspection	V.D2-35	3.2.1-8	E, 5
Piping and Fittings	Pressure Boundary	Stainless Steel	Lubricating Oil (Internal)	Loss of Material/Pitting and Crevice Corrosion	Lubricating Oil Analysis	V.D1-24	3.2.1-6	B
Piping and Fittings	Pressure Boundary	Stainless Steel	Lubricating Oil (Internal)	Loss of Material/Pitting and Crevice Corrosion	One-Time Inspection	V.D1-24	3.2.1-6	A
Piping and Fittings	Pressure Boundary	Stainless Steel	Steam (Internal)	Cracking/Stress Corrosion Cracking	One-Time Inspection	VIII.B2-1	3.4.1-13	A
Piping and Fittings	Pressure Boundary	Stainless Steel	Steam (Internal)	Cracking/Stress Corrosion Cracking	Water Chemistry	VIII.B2-1	3.4.1-13	B
Piping and Fittings	Pressure Boundary	Stainless Steel	Steam (Internal)	Cumulative Fatigue Damage/Fatigue	TLAA	VII.E3-14	3.3.1-2	A, 2
Piping and Fittings	Pressure Boundary	Stainless Steel	Steam (Internal)	Loss of Material/Pitting and Crevice Corrosion	One-Time Inspection	V.D2-28	3.2.1-5	A
Piping and Fittings	Pressure Boundary	Stainless Steel	Steam (Internal)	Loss of Material/Pitting and Crevice Corrosion	Water Chemistry	V.D2-28	3.2.1-5	B
Piping and Fittings	Pressure Boundary	Stainless Steel	Treated Water (Internal)	Loss of Material/Pitting and Crevice Corrosion	One-Time Inspection	V.D2-28	3.2.1-5	A
Piping and Fittings	Pressure Boundary	Stainless Steel	Treated Water (Internal)	Loss of Material/Pitting and Crevice Corrosion	Water Chemistry	V.D2-28	3.2.1-5	B
Piping and Fittings	Pressure Boundary	Stainless Steel	Treated Water (Internal) > 140 F	Cracking/Stress Corrosion Cracking	One-Time Inspection	VIII.E-31	3.4.1-14	A
Piping and Fittings	Pressure Boundary	Stainless Steel	Treated Water (Internal) > 140 F	Cracking/Stress Corrosion Cracking	Water Chemistry	VIII.E-31	3.4.1-14	B
Piping and Fittings	Pressure Boundary	Stainless Steel	Treated Water (Internal) > 140 F	Loss of Material/Pitting and Crevice Corrosion	One-Time Inspection	V.D2-28	3.2.1-5	A
Piping and Fittings	Pressure Boundary	Stainless Steel	Treated Water (Internal) > 140 F	Loss of Material/Pitting and Crevice Corrosion	Water Chemistry	V.D2-28	3.2.1-5	B
Piping and Fittings	Structural Support	Carbon Steel	Air - Indoor (External)	Loss of Material/General Corrosion	External Surfaces Monitoring	V.D2-2	3.2.1-31	A

Table 3.2.2-6 Reactor Core Isolation Cooling (RCIC) System (Continued)

Component Type	Intended Function	Material	Environment	Aging Effect Requiring Management	Aging Management Programs	NUREG-1801 Vol. 2 Item	Table 1 Item	Notes
Piping and Fittings	Structural Support	Carbon Steel	Air/Gas - Wetted (Internal)	Loss of Material/General, Pitting and Crevice Corrosion	Inspection of Internal Surfaces in Miscellaneous Piping and Ducting Components	V.D2-17	3.2.1-34	A
Piping and Fittings (Class 1)	Pressure Boundary	Carbon Steel	Air - Indoor (External)	Loss of Material/General Corrosion	External Surfaces Monitoring	V.D2-2	3.2.1-31	A
Piping and Fittings (Class 1)	Pressure Boundary	Carbon Steel	Steam (Internal)	Cumulative Fatigue Damage/Fatigue	TLAA	IV.C1-15	3.1.1-3	A, 2
Piping and Fittings (Class 1)	Pressure Boundary	Carbon Steel	Steam (Internal)	Loss of Material/Galvanic Corrosion	One-Time Inspection	VIII.E-7	3.4.1-5	C
Piping and Fittings (Class 1)	Pressure Boundary	Carbon Steel	Steam (Internal)	Loss of Material/Galvanic Corrosion	Water Chemistry	VIII.E-7	3.4.1-5	D
Piping and Fittings (Class 1)	Pressure Boundary	Carbon Steel	Steam (Internal)	Loss of Material/General, Pitting and Crevice Corrosion	One-Time Inspection	IV.C1-6	3.1.1-13	C
Piping and Fittings (Class 1)	Pressure Boundary	Carbon Steel	Steam (Internal)	Loss of Material/General, Pitting and Crevice Corrosion	Water Chemistry	IV.C1-6	3.1.1-13	D, 4, 7
Piping and Fittings (Class 1)	Pressure Boundary	Carbon Steel	Treated Water (Internal)	Cumulative Fatigue Damage/Fatigue	TLAA	IV.C1-15	3.1.1-3	A, 2
Piping and Fittings (Class 1)	Pressure Boundary	Carbon Steel	Treated Water (Internal)	Loss of Material/Galvanic Corrosion	One-Time Inspection	VIII.E-7	3.4.1-5	C
Piping and Fittings (Class 1)	Pressure Boundary	Carbon Steel	Treated Water (Internal)	Loss of Material/Galvanic Corrosion	Water Chemistry	VIII.E-7	3.4.1-5	D
Piping and Fittings (Class 1)	Pressure Boundary	Carbon Steel	Treated Water (Internal)	Loss of Material/General, Pitting and Crevice Corrosion	One-Time Inspection	IV.C1-6	3.1.1-13	C
Piping and Fittings (Class 1)	Pressure Boundary	Carbon Steel	Treated Water (Internal)	Loss of Material/General, Pitting and Crevice Corrosion	Water Chemistry	IV.C1-6	3.1.1-13	D, 4, 7
Pump Casing (Jockey Pump)	Pressure Boundary	Carbon Steel	Air - Indoor (External)	Loss of Material/General Corrosion	External Surfaces Monitoring	V.D2-2	3.2.1-31	A

Table 3.2.2-6 Reactor Core Isolation Cooling (RCIC) System (Continued)

Component Type	Intended Function	Material	Environment	Aging Effect Requiring Management	Aging Management Programs	NUREG-1801 Vol. 2 Item	Table 1 Item	Notes
Pump Casing (Jockey Pump)	Pressure Boundary	Carbon Steel	Treated Water (Internal)	Loss of Material/General, Pitting and Crevice Corrosion	One-Time Inspection	V.D2-33	3.2.1-14	A
Pump Casing (Jockey Pump)	Pressure Boundary	Carbon Steel	Treated Water (Internal)	Loss of Material/General, Pitting and Crevice Corrosion	Water Chemistry	V.D2-33	3.2.1-14	B
Pump Casing (RCIC Gland Seal Cond. Vacuum Pump)	Structural Support	Carbon Steel	Air - Indoor (External)	Loss of Material/General Corrosion	External Surfaces Monitoring	V.D2-2	3.2.1-31	A
Pump Casing (RCIC Gland Seal Cond. Vacuum Pump)	Structural Support	Carbon Steel	Air/Gas - Wetted (Internal)	Loss of Material/General, Pitting and Crevice Corrosion	Inspection of Internal Surfaces in Miscellaneous Piping and Ducting Components	V.D2-17	3.2.1-34	A
Pump Casing (RCIC Pump)	Pressure Boundary	Carbon Steel	Air - Indoor (External)	Loss of Material/General Corrosion	External Surfaces Monitoring	V.D2-2	3.2.1-31	A
Pump Casing (RCIC Pump)	Pressure Boundary	Carbon Steel	Treated Water (Internal)	Loss of Material/General, Pitting and Crevice Corrosion	One-Time Inspection	V.D2-33	3.2.1-14	A
Pump Casing (RCIC Pump)	Pressure Boundary	Carbon Steel	Treated Water (Internal)	Loss of Material/General, Pitting and Crevice Corrosion	Water Chemistry	V.D2-33	3.2.1-14	B
Pump Casing (Turbine Aux Oil Pump)	Pressure Boundary	Gray Cast Iron	Air - Indoor (External)	Loss of Material/General Corrosion	External Surfaces Monitoring	V.D2-2	3.2.1-31	A
Pump Casing (Turbine Aux Oil Pump)	Pressure Boundary	Gray Cast Iron	Lubricating Oil (Internal)	Loss of Material/General, Pitting and Crevice Corrosion	Lubricating Oil Analysis	V.D2-30	3.2.1-16	B
Pump Casing (Turbine Aux Oil Pump)	Pressure Boundary	Gray Cast Iron	Lubricating Oil (Internal)	Loss of Material/General, Pitting and Crevice Corrosion	One-Time Inspection	V.D2-30	3.2.1-16	A
Pump Casing (Turbine Main Oil Pump)	Pressure Boundary	Carbon Steel	Air - Indoor (External)	Loss of Material/General Corrosion	External Surfaces Monitoring	V.D2-2	3.2.1-31	A

Table 3.2.2-6 Reactor Core Isolation Cooling (RCIC) System (Continued)

Component Type	Intended Function	Material	Environment	Aging Effect Requiring Management	Aging Management Programs	NUREG-1801 Vol. 2 Item	Table 1 Item	Notes
Pump Casing (Turbine Main Oil Pump)	Pressure Boundary	Carbon Steel	Lubricating Oil (Internal)	Loss of Material/General, Pitting and Crevice Corrosion	Lubricating Oil Analysis	V.D2-30	3.2.1-16	B
Pump Casing (Turbine Main Oil Pump)	Pressure Boundary	Carbon Steel	Lubricating Oil (Internal)	Loss of Material/General, Pitting and Crevice Corrosion	One-Time Inspection	V.D2-30	3.2.1-16	A
Pump Casing (Vacuum Tank Condensate Pump)	Leakage Boundary	Carbon Steel	Air - Indoor (External)	Loss of Material/General Corrosion	External Surfaces Monitoring	V.D2-2	3.2.1-31	A
Pump Casing (Vacuum Tank Condensate Pump)	Leakage Boundary	Carbon Steel	Treated Water (Internal)	Loss of Material/General, Pitting and Crevice Corrosion	One-Time Inspection	V.D2-33	3.2.1-14	A
Pump Casing (Vacuum Tank Condensate Pump)	Leakage Boundary	Carbon Steel	Treated Water (Internal)	Loss of Material/General, Pitting and Crevice Corrosion	Water Chemistry	V.D2-33	3.2.1-14	B
Restricting Orifices	Pressure Boundary	Stainless Steel	Air - Indoor (External)	None	None	V.F-12	3.2.1-53	A
Restricting Orifices	Pressure Boundary	Stainless Steel	Air/Gas - Wetted (Internal)	Loss of Material/Pitting and Crevice Corrosion	Periodic Inspection	V.D2-35	3.2.1-8	E, 5
Restricting Orifices	Pressure Boundary	Stainless Steel	Lubricating Oil (Internal)	Loss of Material/Pitting and Crevice Corrosion	Lubricating Oil Analysis	V.D1-24	3.2.1-6	B
Restricting Orifices	Pressure Boundary	Stainless Steel	Lubricating Oil (Internal)	Loss of Material/Pitting and Crevice Corrosion	One-Time Inspection	V.D1-24	3.2.1-6	A
Restricting Orifices	Pressure Boundary	Stainless Steel	Treated Water (Internal) > 140 F	Cracking/Stress Corrosion Cracking	One-Time Inspection	VIII.E-31	3.4.1-14	A
Restricting Orifices	Pressure Boundary	Stainless Steel	Treated Water (Internal) > 140 F	Cracking/Stress Corrosion Cracking	Water Chemistry	VIII.E-31	3.4.1-14	B
Restricting Orifices	Pressure Boundary	Stainless Steel	Treated Water (Internal) > 140 F	Loss of Material/Pitting and Crevice Corrosion	One-Time Inspection	V.D2-28	3.2.1-5	A
Restricting Orifices	Pressure Boundary	Stainless Steel	Treated Water (Internal) > 140 F	Loss of Material/Pitting and Crevice Corrosion	Water Chemistry	V.D2-28	3.2.1-5	B
Restricting Orifices	Throttle	Stainless Steel	Air - Indoor (External)	None	None	V.F-12	3.2.1-53	A
Restricting Orifices	Throttle	Stainless Steel	Air/Gas - Wetted (Internal)	Loss of Material/Pitting and Crevice Corrosion	Periodic Inspection	V.D2-35	3.2.1-8	E, 5

Table 3.2.2-6 Reactor Core Isolation Cooling (RCIC) System (Continued)

Component Type	Intended Function	Material	Environment	Aging Effect Requiring Management	Aging Management Programs	NUREG-1801 Vol. 2 Item	Table 1 Item	Notes
Restricting Orifices	Throttle	Stainless Steel	Lubricating Oil (Internal)	Loss of Material/Pitting and Crevice Corrosion	Lubricating Oil Analysis	V.D1-24	3.2.1-6	B
Restricting Orifices	Throttle	Stainless Steel	Lubricating Oil (Internal)	Loss of Material/Pitting and Crevice Corrosion	One-Time Inspection	V.D1-24	3.2.1-6	A
Restricting Orifices	Throttle	Stainless Steel	Treated Water (Internal) > 140 F	Cracking/Stress Corrosion Cracking	One-Time Inspection	VIII.E-31	3.4.1-14	A
Restricting Orifices	Throttle	Stainless Steel	Treated Water (Internal) > 140 F	Cracking/Stress Corrosion Cracking	Water Chemistry	VIII.E-31	3.4.1-14	B
Restricting Orifices	Throttle	Stainless Steel	Treated Water (Internal) > 140 F	Loss of Material/Pitting and Crevice Corrosion	One-Time Inspection	V.D2-28	3.2.1-5	A
Restricting Orifices	Throttle	Stainless Steel	Treated Water (Internal) > 140 F	Loss of Material/Pitting and Crevice Corrosion	Water Chemistry	V.D2-28	3.2.1-5	B
Restricting Orifices (Class 1)	Pressure Boundary	Stainless Steel	Air - Indoor (External)	None	None	IV.E-2	3.1.1-86	A
Restricting Orifices (Class 1)	Pressure Boundary	Stainless Steel	Treated Water (Internal) > 140 F	Cracking/Stress Corrosion Cracking	ASME Section XI Inservice Inspection, Subsections IWB, IWC, and IWD	IV.C1-1	3.1.1-48	E, 6
Restricting Orifices (Class 1)	Pressure Boundary	Stainless Steel	Treated Water (Internal) > 140 F	Cracking/Stress Corrosion Cracking	Water Chemistry	IV.C1-1	3.1.1-48	E, 6
Restricting Orifices (Class 1)	Pressure Boundary	Stainless Steel	Treated Water (Internal) > 140 F	Loss of Material/Pitting and Crevice Corrosion	One-Time Inspection	IV.C1-14	3.1.1-15	A
Restricting Orifices (Class 1)	Pressure Boundary	Stainless Steel	Treated Water (Internal) > 140 F	Loss of Material/Pitting and Crevice Corrosion	Water Chemistry	IV.C1-14	3.1.1-15	B
Restricting Orifices (Class 1)	Throttle	Stainless Steel	Air - Indoor (External)	None	None	IV.E-2	3.1.1-86	A
Restricting Orifices (Class 1)	Throttle	Stainless Steel	Treated Water (Internal) > 140 F	Cracking/Stress Corrosion Cracking	ASME Section XI Inservice Inspection, Subsections IWB, IWC, and IWD	IV.C1-1	3.1.1-48	E, 6
Restricting Orifices (Class 1)	Throttle	Stainless Steel	Treated Water (Internal) > 140 F	Cracking/Stress Corrosion Cracking	Water Chemistry	IV.C1-1	3.1.1-48	E, 6
Restricting Orifices (Class 1)	Throttle	Stainless Steel	Treated Water (Internal) > 140 F	Loss of Material/Pitting and Crevice Corrosion	One-Time Inspection	IV.C1-14	3.1.1-15	A

Table 3.2.2-6 Reactor Core Isolation Cooling (RCIC) System (Continued)

Component Type	Intended Function	Material	Environment	Aging Effect Requiring Management	Aging Management Programs	NUREG-1801 Vol. 2 Item	Table 1 Item	Notes
Restricting Orifices (Class 1)	Throttle	Stainless Steel	Treated Water (Internal) > 140 F	Loss of Material/Pitting and Crevice Corrosion	Water Chemistry	IV.C1-14	3.1.1-15	B
Sight Glasses	Leakage Boundary	Carbon Steel	Air - Indoor (External)	Loss of Material/General Corrosion	External Surfaces Monitoring	V.D2-2	3.2.1-31	A
Sight Glasses	Leakage Boundary	Carbon Steel	Treated Water (Internal)	Loss of Material/General, Pitting and Crevice Corrosion	One-Time Inspection	V.D2-33	3.2.1-14	A
Sight Glasses	Leakage Boundary	Carbon Steel	Treated Water (Internal)	Loss of Material/General, Pitting and Crevice Corrosion	Water Chemistry	V.D2-33	3.2.1-14	B
Sight Glasses	Leakage Boundary	Glass	Treated Water (Internal)	None	None	V.F-10	3.2.1-52	A
Sight Glasses	Pressure Boundary	Carbon Steel	Air - Indoor (External)	Loss of Material/General Corrosion	External Surfaces Monitoring	V.D2-2	3.2.1-31	A
Sight Glasses	Pressure Boundary	Carbon Steel	Lubricating Oil (Internal)	Loss of Material/General, Pitting and Crevice Corrosion	Lubricating Oil Analysis	V.D2-30	3.2.1-16	B
Sight Glasses	Pressure Boundary	Carbon Steel	Lubricating Oil (Internal)	Loss of Material/General, Pitting and Crevice Corrosion	One-Time Inspection	V.D2-30	3.2.1-16	A
Sight Glasses	Pressure Boundary	Glass	Air - Indoor (External)	None	None	V.F-6	3.2.1-52	A
Sight Glasses	Pressure Boundary	Glass	Lubricating Oil (External)	None	None	V.F-7	3.2.1-52	A
Sparger (Turbine Exhaust)	Spray	Carbon Steel	Treated Water (External)	Loss of Material/General, Pitting and Crevice Corrosion	One-Time Inspection	V.D2-33	3.2.1-14	A
Sparger (Turbine Exhaust)	Spray	Carbon Steel	Treated Water (External)	Loss of Material/General, Pitting and Crevice Corrosion	Water Chemistry	V.D2-33	3.2.1-14	B
Sparger (Turbine Exhaust)	Spray	Carbon Steel	Treated Water (Internal)	Loss of Material/General, Pitting and Crevice Corrosion	One-Time Inspection	V.D2-33	3.2.1-14	A
Sparger (Turbine Exhaust)	Spray	Carbon Steel	Treated Water (Internal)	Loss of Material/General, Pitting and Crevice Corrosion	Water Chemistry	V.D2-33	3.2.1-14	B

Table 3.2.2-6 Reactor Core Isolation Cooling (RCIC) System (Continued)

Component Type	Intended Function	Material	Environment	Aging Effect Requiring Management	Aging Management Programs	NUREG-1801 Vol. 2 Item	Table 1 Item	Notes
Strainer	Filter	Carbon Steel	Lubricating Oil (External)	Loss of Material/General, Pitting and Crevice Corrosion	Lubricating Oil Analysis	V.D2-30	3.2.1-16	B
Strainer	Filter	Carbon Steel	Lubricating Oil (External)	Loss of Material/General, Pitting and Crevice Corrosion	One-Time Inspection	V.D2-30	3.2.1-16	A
Strainer	Filter	Carbon Steel	Lubricating Oil (Internal)	Loss of Material/General, Pitting and Crevice Corrosion	Lubricating Oil Analysis	V.D2-30	3.2.1-16	B
Strainer	Filter	Carbon Steel	Lubricating Oil (Internal)	Loss of Material/General, Pitting and Crevice Corrosion	One-Time Inspection	V.D2-30	3.2.1-16	A
Strainer	Filter	Stainless Steel	Treated Water (External)	Loss of Material/Pitting and Crevice Corrosion	One-Time Inspection	V.D2-28	3.2.1-5	A
Strainer	Filter	Stainless Steel	Treated Water (External)	Loss of Material/Pitting and Crevice Corrosion	Water Chemistry	V.D2-28	3.2.1-5	B
Strainer	Filter	Stainless Steel	Treated Water (Internal)	Loss of Material/Pitting and Crevice Corrosion	One-Time Inspection	V.D2-28	3.2.1-5	A
Strainer	Filter	Stainless Steel	Treated Water (Internal)	Loss of Material/Pitting and Crevice Corrosion	Water Chemistry	V.D2-28	3.2.1-5	B
Strainer	Pressure Boundary	Carbon Steel	Lubricating Oil (External)	Loss of Material/General, Pitting and Crevice Corrosion	Lubricating Oil Analysis	V.D2-30	3.2.1-16	B
Strainer	Pressure Boundary	Carbon Steel	Lubricating Oil (External)	Loss of Material/General, Pitting and Crevice Corrosion	One-Time Inspection	V.D2-30	3.2.1-16	A
Strainer	Pressure Boundary	Carbon Steel	Lubricating Oil (Internal)	Loss of Material/General, Pitting and Crevice Corrosion	Lubricating Oil Analysis	V.D2-30	3.2.1-16	B
Strainer	Pressure Boundary	Carbon Steel	Lubricating Oil (Internal)	Loss of Material/General, Pitting and Crevice Corrosion	One-Time Inspection	V.D2-30	3.2.1-16	A
Strainer	Pressure Boundary	Stainless Steel	Treated Water (External)	Loss of Material/Pitting and Crevice Corrosion	One-Time Inspection	V.D2-28	3.2.1-5	A

Table 3.2.2-6 Reactor Core Isolation Cooling (RCIC) System (Continued)

Component Type	Intended Function	Material	Environment	Aging Effect Requiring Management	Aging Management Programs	NUREG-1801 Vol. 2 Item	Table 1 Item	Notes
Strainer	Pressure Boundary	Stainless Steel	Treated Water (External)	Loss of Material/Pitting and Crevice Corrosion	Water Chemistry	V.D2-28	3.2.1-5	B
Strainer	Pressure Boundary	Stainless Steel	Treated Water (Internal)	Loss of Material/Pitting and Crevice Corrosion	One-Time Inspection	V.D2-28	3.2.1-5	A
Strainer	Pressure Boundary	Stainless Steel	Treated Water (Internal)	Loss of Material/Pitting and Crevice Corrosion	Water Chemistry	V.D2-28	3.2.1-5	B
Strainer Body	Pressure Boundary	Carbon Steel	Air - Indoor (External)	Loss of Material/General Corrosion	External Surfaces Monitoring	V.D2-2	3.2.1-31	A
Strainer Body	Pressure Boundary	Carbon Steel	Lubricating Oil (Internal)	Loss of Material/General, Pitting and Crevice Corrosion	Lubricating Oil Analysis	V.D2-30	3.2.1-16	B
Strainer Body	Pressure Boundary	Carbon Steel	Lubricating Oil (Internal)	Loss of Material/General, Pitting and Crevice Corrosion	One-Time Inspection	V.D2-30	3.2.1-16	A
Strainer Body	Pressure Boundary	Carbon Steel	Treated Water (Internal)	Loss of Material/General, Pitting and Crevice Corrosion	One-Time Inspection	V.D2-33	3.2.1-14	A
Strainer Body	Pressure Boundary	Carbon Steel	Treated Water (Internal)	Loss of Material/General, Pitting and Crevice Corrosion	Water Chemistry	V.D2-33	3.2.1-14	B
Tank (Turbine Lube Oil Reservoirs)	Pressure Boundary	Gray Cast Iron	Air - Indoor (External)	Loss of Material/General Corrosion	External Surfaces Monitoring	V.E-7	3.2.1-31	A
Tank (Turbine Lube Oil Reservoirs)	Pressure Boundary	Gray Cast Iron	Lubricating Oil (Internal)	Loss of Material/General, Pitting and Crevice Corrosion	Lubricating Oil Analysis	V.D2-30	3.2.1-16	D
Tank (Turbine Lube Oil Reservoirs)	Pressure Boundary	Gray Cast Iron	Lubricating Oil (Internal)	Loss of Material/General, Pitting and Crevice Corrosion	One-Time Inspection	V.D2-30	3.2.1-16	C
Tank (Vacuum Tank)	Leakage Boundary	Carbon Steel	Air - Indoor (External)	Loss of Material/General Corrosion	External Surfaces Monitoring	V.E-7	3.2.1-31	A
Tank (Vacuum Tank)	Leakage Boundary	Carbon Steel	Treated Water (Internal)	Loss of Material/General, Pitting and Crevice Corrosion	One-Time Inspection	V.D2-33	3.2.1-14	C

Table 3.2.2-6 Reactor Core Isolation Cooling (RCIC) System (Continued)

Component Type	Intended Function	Material	Environment	Aging Effect Requiring Management	Aging Management Programs	NUREG-1801 Vol. 2 Item	Table 1 Item	Notes
Tank (Vacuum Tank)	Leakage Boundary	Carbon Steel	Treated Water (Internal)	Loss of Material/General, Pitting and Crevice Corrosion	Water Chemistry	V.D2-33	3.2.1-14	D
Thermowell	Pressure Boundary	Stainless Steel	Air - Indoor (External)	None	None	V.F-12	3.2.1-53	A
Thermowell	Pressure Boundary	Stainless Steel	Lubricating Oil (Internal)	Loss of Material/Pitting and Crevice Corrosion	Lubricating Oil Analysis	V.D1-24	3.2.1-6	B
Thermowell	Pressure Boundary	Stainless Steel	Lubricating Oil (Internal)	Loss of Material/Pitting and Crevice Corrosion	One-Time Inspection	V.D1-24	3.2.1-6	A
Thermowell	Pressure Boundary	Stainless Steel	Treated Water (Internal)	Loss of Material/Pitting and Crevice Corrosion	One-Time Inspection	V.D2-28	3.2.1-5	A
Thermowell	Pressure Boundary	Stainless Steel	Treated Water (Internal)	Loss of Material/Pitting and Crevice Corrosion	Water Chemistry	V.D2-28	3.2.1-5	B
Turbine Casing	Pressure Boundary	Carbon Steel	Air - Indoor (External)	Loss of Material/General Corrosion	External Surfaces Monitoring	V.D2-2	3.2.1-31	A
Turbine Casing	Pressure Boundary	Carbon Steel	Air/Gas - Wetted (Internal)	Loss of Material/General, Pitting and Crevice Corrosion	Inspection of Internal Surfaces in Miscellaneous Piping and Ducting Components	V.D2-17	3.2.1-34	A
Valve Body	Leakage Boundary	Carbon Steel	Air - Indoor (External)	Loss of Material/General Corrosion	External Surfaces Monitoring	V.D2-2	3.2.1-31	A
Valve Body	Leakage Boundary	Carbon Steel	Air/Gas - Wetted (Internal)	Loss of Material/General, Pitting and Crevice Corrosion	Inspection of Internal Surfaces in Miscellaneous Piping and Ducting Components	V.D2-17	3.2.1-34	A
Valve Body	Leakage Boundary	Carbon Steel	Steam (Internal)	Loss of Material/General, Pitting and Crevice Corrosion	One-Time Inspection	V.D2-33	3.2.1-14	A
Valve Body	Leakage Boundary	Carbon Steel	Steam (Internal)	Loss of Material/General, Pitting and Crevice Corrosion	Water Chemistry	V.D2-33	3.2.1-14	B, 4
Valve Body	Leakage Boundary	Carbon Steel	Steam (Internal)	Wall Thinning/Flow Accelerated Corrosion	Flow-Accelerated Corrosion	V.D2-34	3.2.1-19	B, 7

Table 3.2.2-6 Reactor Core Isolation Cooling (RCIC) System (Continued)

Component Type	Intended Function	Material	Environment	Aging Effect Requiring Management	Aging Management Programs	NUREG-1801 Vol. 2 Item	Table 1 Item	Notes
Valve Body	Leakage Boundary	Carbon Steel	Treated Water (Internal)	Loss of Material/General, Pitting and Crevice Corrosion	One-Time Inspection	V.D2-33	3.2.1-14	A
Valve Body	Leakage Boundary	Carbon Steel	Treated Water (Internal)	Loss of Material/General, Pitting and Crevice Corrosion	Water Chemistry	V.D2-33	3.2.1-14	B, 4
Valve Body	Leakage Boundary	Copper Alloy with 15% Zinc or More	Air - Indoor (External)	None	None	V.F-3	3.2.1-53	A
Valve Body	Leakage Boundary	Copper Alloy with 15% Zinc or More	Treated Water (Internal)	Loss of Material/Pitting, Crevice, and Galvanic Corrosion	One-Time Inspection	VII.A4-7	3.3.1-31	A
Valve Body	Leakage Boundary	Copper Alloy with 15% Zinc or More	Treated Water (Internal)	Loss of Material/Pitting, Crevice, and Galvanic Corrosion	Water Chemistry	VII.A4-7	3.3.1-31	B
Valve Body	Leakage Boundary	Copper Alloy with 15% Zinc or More	Treated Water (Internal)	Loss of Material/Selective Leaching	Selective Leaching of Materials	VII.A4-9	3.3.1-84	A
Valve Body	Leakage Boundary	Stainless Steel	Air - Indoor (External)	None	None	V.F-12	3.2.1-53	A
Valve Body	Leakage Boundary	Stainless Steel	Air/Gas - Wetted (Internal)	Loss of Material/Pitting and Crevice Corrosion	Periodic Inspection	V.D2-35	3.2.1-8	E, 5
Valve Body	Leakage Boundary	Stainless Steel	Treated Water (Internal)	Loss of Material/Pitting and Crevice Corrosion	One-Time Inspection	V.D2-28	3.2.1-5	A
Valve Body	Leakage Boundary	Stainless Steel	Treated Water (Internal)	Loss of Material/Pitting and Crevice Corrosion	Water Chemistry	V.D2-28	3.2.1-5	B
Valve Body	Pressure Boundary	Carbon Steel	Air - Indoor (External)	Loss of Material/General Corrosion	External Surfaces Monitoring	V.D2-2	3.2.1-31	A
Valve Body	Pressure Boundary	Carbon Steel	Air/Gas - Wetted (Internal)	Loss of Material/General, Pitting and Crevice Corrosion	Inspection of Internal Surfaces in Miscellaneous Piping and Ducting Components	V.D2-17	3.2.1-34	A
Valve Body	Pressure Boundary	Carbon Steel	Lubricating Oil (Internal)	Loss of Material/General, Pitting and Crevice Corrosion	Lubricating Oil Analysis	V.D2-30	3.2.1-16	B

Table 3.2.2-6 Reactor Core Isolation Cooling (RCIC) System (Continued)

Component Type	Intended Function	Material	Environment	Aging Effect Requiring Management	Aging Management Programs	NUREG-1801 Vol. 2 Item	Table 1 Item	Notes
Valve Body	Pressure Boundary	Carbon Steel	Lubricating Oil (Internal)	Loss of Material/General, Pitting and Crevice Corrosion	One-Time Inspection	V.D2-30	3.2.1-16	A
Valve Body	Pressure Boundary	Carbon Steel	Steam (Internal)	Loss of Material/General, Pitting and Crevice Corrosion	One-Time Inspection	V.D2-33	3.2.1-14	A
Valve Body	Pressure Boundary	Carbon Steel	Steam (Internal)	Loss of Material/General, Pitting and Crevice Corrosion	Water Chemistry	V.D2-33	3.2.1-14	B, 4
Valve Body	Pressure Boundary	Carbon Steel	Steam (Internal)	Wall Thinning/Flow Accelerated Corrosion	Flow-Accelerated Corrosion	V.D2-34	3.2.1-19	B, 7
Valve Body	Pressure Boundary	Carbon Steel	Treated Water (Internal)	Loss of Material/General, Pitting and Crevice Corrosion	One-Time Inspection	V.D2-33	3.2.1-14	A
Valve Body	Pressure Boundary	Carbon Steel	Treated Water (Internal)	Loss of Material/General, Pitting and Crevice Corrosion	Water Chemistry	V.D2-33	3.2.1-14	B, 4
Valve Body	Pressure Boundary	Stainless Steel	Air - Indoor (External)	None	None	V.F-12	3.2.1-53	A
Valve Body	Pressure Boundary	Stainless Steel	Air/Gas - Wetted (Internal)	Loss of Material/Pitting and Crevice Corrosion	Periodic Inspection	V.D2-35	3.2.1-8	E, 5
Valve Body	Pressure Boundary	Stainless Steel	Lubricating Oil (Internal)	Loss of Material/Pitting and Crevice Corrosion	Lubricating Oil Analysis	V.D1-24	3.2.1-6	B
Valve Body	Pressure Boundary	Stainless Steel	Lubricating Oil (Internal)	Loss of Material/Pitting and Crevice Corrosion	One-Time Inspection	V.D1-24	3.2.1-6	A
Valve Body	Pressure Boundary	Stainless Steel	Steam (Internal)	Cracking/Stress Corrosion Cracking	One-Time Inspection	VIII.B2-1	3.4.1-13	A
Valve Body	Pressure Boundary	Stainless Steel	Steam (Internal)	Cracking/Stress Corrosion Cracking	Water Chemistry	VIII.B2-1	3.4.1-13	B
Valve Body	Pressure Boundary	Stainless Steel	Steam (Internal)	Loss of Material/Pitting and Crevice Corrosion	One-Time Inspection	V.D2-28	3.2.1-5	A
Valve Body	Pressure Boundary	Stainless Steel	Steam (Internal)	Loss of Material/Pitting and Crevice Corrosion	Water Chemistry	V.D2-28	3.2.1-5	B
Valve Body	Pressure Boundary	Stainless Steel	Treated Water (Internal) > 140 F	Cracking/Stress Corrosion Cracking	One-Time Inspection	VIII.E-31	3.4.1-14	A

Table 3.2.2-6 Reactor Core Isolation Cooling (RCIC) System (Continued)

Component Type	Intended Function	Material	Environment	Aging Effect Requiring Management	Aging Management Programs	NUREG-1801 Vol. 2 Item	Table 1 Item	Notes
Valve Body	Pressure Boundary	Stainless Steel	Treated Water (Internal) > 140 F	Cracking/Stress Corrosion Cracking	Water Chemistry	VIII.E-31	3.4.1-14	B
Valve Body	Pressure Boundary	Stainless Steel	Treated Water (Internal) > 140 F	Loss of Material/Pitting and Crevice Corrosion	One-Time Inspection	V.D2-28	3.2.1-5	A
Valve Body	Pressure Boundary	Stainless Steel	Treated Water (Internal) > 140 F	Loss of Material/Pitting and Crevice Corrosion	Water Chemistry	V.D2-28	3.2.1-5	B
Valve Body	Structural Support	Carbon Steel	Air - Indoor (External)	Loss of Material/General Corrosion	External Surfaces Monitoring	V.D2-2	3.2.1-31	A
Valve Body	Structural Support	Carbon Steel	Air/Gas - Wetted (Internal)	Loss of Material/General, Pitting and Crevice Corrosion	Inspection of Internal Surfaces in Miscellaneous Piping and Ducting Components	V.D2-17	3.2.1-34	A
Valve Body (Class 1)	Pressure Boundary	Carbon Steel	Air - Indoor (External)	Loss of Material/General Corrosion	External Surfaces Monitoring	V.D2-2	3.2.1-31	A
Valve Body (Class 1)	Pressure Boundary	Carbon Steel	Steam (Internal)	Cumulative Fatigue Damage/Fatigue	TLAA	IV.C1-15	3.1.1-3	A, 2
Valve Body (Class 1)	Pressure Boundary	Carbon Steel	Steam (Internal)	Loss of Material/General, Pitting and Crevice Corrosion	One-Time Inspection	IV.C1-6	3.1.1-13	C
Valve Body (Class 1)	Pressure Boundary	Carbon Steel	Steam (Internal)	Loss of Material/General, Pitting and Crevice Corrosion	Water Chemistry	IV.C1-6	3.1.1-13	D, 4
Valve Body (Class 1)	Pressure Boundary	Carbon Steel	Treated Water (Internal)	Cumulative Fatigue Damage/Fatigue	TLAA	IV.C1-15	3.1.1-3	A, 2
Valve Body (Class 1)	Pressure Boundary	Carbon Steel	Treated Water (Internal)	Loss of Material/General, Pitting and Crevice Corrosion	One-Time Inspection	IV.C1-6	3.1.1-13	C
Valve Body (Class 1)	Pressure Boundary	Carbon Steel	Treated Water (Internal)	Loss of Material/General, Pitting and Crevice Corrosion	Water Chemistry	IV.C1-6	3.1.1-13	D, 4
Valve Body (Class 1)	Pressure Boundary	Stainless Steel	Air - Indoor (External)	None	None	IV.E-2	3.1.1-86	A

Table 3.2.2-6 Reactor Core Isolation Cooling (RCIC) System (Continued)

Component Type	Intended Function	Material	Environment	Aging Effect Requiring Management	Aging Management Programs	NUREG-1801 Vol. 2 Item	Table 1 Item	Notes
Valve Body (Class 1)	Pressure Boundary	Stainless Steel	Steam (Internal)	Cracking/Stress Corrosion Cracking	ASME Section XI Inservice Inspection, Subsections IWB, IWC, and IWD	IV.C1-1	3.1.1-48	E, 6
Valve Body (Class 1)	Pressure Boundary	Stainless Steel	Steam (Internal)	Cracking/Stress Corrosion Cracking	Water Chemistry	IV.C1-1	3.1.1-48	E, 6
Valve Body (Class 1)	Pressure Boundary	Stainless Steel	Steam (Internal)	Loss of Material/Pitting and Crevice Corrosion	One-Time Inspection	IV.C1-14	3.1.1-15	A
Valve Body (Class 1)	Pressure Boundary	Stainless Steel	Steam (Internal)	Loss of Material/Pitting and Crevice Corrosion	Water Chemistry	IV.C1-14	3.1.1-15	B
Valve Body (Class 1)	Pressure Boundary	Stainless Steel	Treated Water (Internal) > 140 F	Cracking/Stress Corrosion Cracking	ASME Section XI Inservice Inspection, Subsections IWB, IWC, and IWD	IV.C1-1	3.1.1-48	E, 6
Valve Body (Class 1)	Pressure Boundary	Stainless Steel	Treated Water (Internal) > 140 F	Cracking/Stress Corrosion Cracking	Water Chemistry	IV.C1-1	3.1.1-48	E, 6
Valve Body (Class 1)	Pressure Boundary	Stainless Steel	Treated Water (Internal) > 140 F	Loss of Material/Pitting and Crevice Corrosion	One-Time Inspection	IV.C1-14	3.1.1-15	A
Valve Body (Class 1)	Pressure Boundary	Stainless Steel	Treated Water (Internal) > 140 F	Loss of Material/Pitting and Crevice Corrosion	Water Chemistry	IV.C1-14	3.1.1-15	B

Notes	Definition of Note
A	Consistent with NUREG-1801 item for component, material, environment, and aging effect. AMP is consistent with NUREG-1801 AMP.
B	Consistent with NUREG-1801 item for component, material, environment, and aging effect. AMP takes some exceptions to NUREG-1801 AMP.
C	Component is different, but consistent with NUREG-1801 item for material, environment, and aging effect. AMP is consistent with NUREG-1801 AMP.
D	Component is different, but consistent with NUREG-1801 item for material, environment, and aging effect. AMP takes some exceptions to NUREG-1801 AMP.
E	Consistent with NUREG-1801 item for material, environment and aging effect, but a different aging management program is credited or NUREG-1801 identifies a plant-specific aging management program.
F	Material not in NUREG-1801 for this component.
G	Environment not in NUREG-1801 for this component and material.
H	Aging effect not in NUREG-1801 for this component, material and environment combination.
I	Aging effect in NUREG-1801 for this component, material and environment combination is not applicable.
J	Neither the component nor the material and environment combination is evaluated in NUREG-1801.

Plant Specific Notes:

1. The aging effects for closure bolting in a treated water environment include loss of material and loss of preload. Loss of preload is managed through the Bolting Integrity aging management program. Loss of material for bolting in a submerged environment is managed in conjunction with the Water Chemistry and One Time Inspection aging management programs.

2. The TLAA designation in the Aging Management Program column indicates fatigue of this component is evaluated in Section 4.3.

3. The NUREG-1801 "One-Time Inspection of ASME Code Class 1 Small-Bore Piping" aging management program is applicable only to plants that have not experienced cracking of ASME Code Class 1 small-bore piping. Based on previous Hope Creek operating experience with Class 1 small-bore pipe cracking, a new plant-specific periodic inspection program will be used. The "Small-Bore Class 1 Piping Inspection" aging management program is a plant-specific periodic program that will be implemented to manage cracking by periodic volumetric examinations of small-bore Class 1 piping.

4. Line Item IV.C1-7 and V.D2-31 for flow-accelerated corrosion is not an applicable aging mechanism as this system is normally in standby except for the RCIC drain line.

5. NUREG-1801 specifies a plant-specific program. The Periodic Inspection program is used to manage the aging effect(s) applicable to this component type, material, and environment combination.

6. The Water Chemistry and ASME Section XI In-service Inspection, Subsections IWB, IWC, and IWD aging management programs will be used to manage the aging effect of cracking in valve bodies and restricting orifices < NPS 4".

7. According to station procedure, the RCIC Drain lines are susceptible to FAC and are included in the scope of the Flow Accelerated Corrosion Program.

Table 3.2.2-7
Residual Heat Removal (RHR) System
Summary of Aging Management Evaluation

Table 3.2.2-7 Residual Heat Removal (RHR) System

Component Type	Intended Function	Material	Environment	Aging Effect Requiring Management	Aging Management Programs	NUREG-1801 Vol. 2 Item	Table 1 Item	Notes
Bolting	Mechanical Closure	Carbon and Low Alloy Steel Bolting	Air - Indoor (External)	Loss of Material/General, Pitting and Crevice Corrosion	Bolting Integrity	V.E-4	3.2.1-23	B
Bolting	Mechanical Closure	Carbon and Low Alloy Steel Bolting	Air - Indoor (External)	Loss of Preload/Thermal Effects, Gasket Creep, and Self-Loosening	Bolting Integrity	V.E-5	3.2.1-24	B
Bolting	Mechanical Closure	Stainless Steel Bolting	Treated Water (External)	Loss of Material/Pitting and Crevice Corrosion	Bolting Integrity			G, 1
Bolting	Mechanical Closure	Stainless Steel Bolting	Treated Water (External)	Loss of Preload/Thermal Effects, Gasket Creep, and Self-Loosening	Bolting Integrity			G, 1
Bolting (Class 1)	Mechanical Closure	Carbon and Low Alloy Steel Bolting	Air - Indoor (External)	Cumulative Fatigue Damage/Fatigue	TLAA	IV.C1-11	3.1.1-4	A, 2
Bolting (Class 1)	Mechanical Closure	Carbon and Low Alloy Steel Bolting	Air - Indoor (External)	Loss of Material/General, Pitting and Crevice Corrosion	Bolting Integrity	V.E-4	3.2.1-23	B
Bolting (Class 1)	Mechanical Closure	Carbon and Low Alloy Steel Bolting	Air - Indoor (External)	Loss of Preload/Thermal Effects, Gasket Creep, and Self-Loosening	Bolting Integrity	IV.C1-10	3.1.1-52	B
Class 1 Piping, Fittings and Branch Connections < NPS 4"	Pressure Boundary	Carbon Steel	Air - Indoor (External)	Loss of Material/General Corrosion	External Surfaces Monitoring	V.E-7	3.2.1-31	A
Class 1 Piping, Fittings and Branch Connections < NPS 4"	Pressure Boundary	Carbon Steel	Treated Water (Internal)	Cracking/Thermal and Mechanical Loading	ASME Section XI Inservice Inspection, Subsections IWB, IWC, and IWD	IV.C1-1	3.1.1-48	A

Table 3.2.2-7 Residual Heat Removal (RHR) System (Continued)

Component Type	Intended Function	Material	Environment	Aging Effect Requiring Management	Aging Management Programs	NUREG-1801 Vol. 2 Item	Table 1 Item	Notes
Class 1 Piping, Fittings and Branch Connections < NPS 4"	Pressure Boundary	Carbon Steel	Treated Water (Internal)	Cracking/Thermal and Mechanical Loading	Small-Bore Class 1 Piping Inspection	IV.C1-1	3.1.1-48	E, 3
Class 1 Piping, Fittings and Branch Connections < NPS 4"	Pressure Boundary	Carbon Steel	Treated Water (Internal)	Cracking/Thermal and Mechanical Loading	Water Chemistry	IV.C1-1	3.1.1-48	B
Class 1 Piping, Fittings and Branch Connections < NPS 4"	Pressure Boundary	Carbon Steel	Treated Water (Internal)	Cumulative Fatigue Damage/Fatigue	TLAA	IV.C1-15	3.1.1-3	A, 2
Class 1 Piping, Fittings and Branch Connections < NPS 4"	Pressure Boundary	Carbon Steel	Treated Water (Internal)	Loss of Material/Galvanic Corrosion	One-Time Inspection	VIII.E-7	3.4.1-5	C
Class 1 Piping, Fittings and Branch Connections < NPS 4"	Pressure Boundary	Carbon Steel	Treated Water (Internal)	Loss of Material/Galvanic Corrosion	Water Chemistry	VIII.E-7	3.4.1-5	D
Class 1 Piping, Fittings and Branch Connections < NPS 4"	Pressure Boundary	Carbon Steel	Treated Water (Internal)	Loss of Material/General, Pitting and Crevice Corrosion	One-Time Inspection	IV.C1-6	3.1.1-13	C
Class 1 Piping, Fittings and Branch Connections < NPS 4"	Pressure Boundary	Carbon Steel	Treated Water (Internal)	Loss of Material/General, Pitting and Crevice Corrosion	Water Chemistry	IV.C1-6	3.1.1-13	D
Class 1 Piping, Fittings and Branch Connections < NPS 4"	Pressure Boundary	Stainless Steel	Air - Indoor (External)	None	None	IV.E-2	3.1.1-86	A
Class 1 Piping, Fittings and Branch Connections < NPS 4"	Pressure Boundary	Stainless Steel	Treated Water (Internal) > 140 F	Cracking/Stress Corrosion Cracking, Thermal and Mechanical Loading	ASME Section XI Inservice Inspection, Subsections IWB, IWC, and IWD	IV.C1-1	3.1.1-48	A

Table 3.2.2-7 Residual Heat Removal (RHR) System (Continued)

Component Type	Intended Function	Material	Environment	Aging Effect Requiring Management	Aging Management Programs	NUREG-1801 Vol. 2 Item	Table 1 Item	Notes
Class 1 Piping, Fittings and Branch Connections < NPS 4"	Pressure Boundary	Stainless Steel	Treated Water (Internal) > 140 F	Cracking/Stress Corrosion Cracking, Thermal and Mechanical Loading	Small-Bore Class 1 Piping Inspection	IV.C1-1	3.1.1-48	E, 3
Class 1 Piping, Fittings and Branch Connections < NPS 4"	Pressure Boundary	Stainless Steel	Treated Water (Internal) > 140 F	Cracking/Stress Corrosion Cracking, Thermal and Mechanical Loading	Water Chemistry	IV.C1-1	3.1.1-48	B
Class 1 Piping, Fittings and Branch Connections < NPS 4"	Pressure Boundary	Stainless Steel	Treated Water (Internal) > 140 F	Cumulative Fatigue Damage/Fatigue	TLAA	IV.C1-15	3.1.1-3	A, 2
Class 1 Piping, Fittings and Branch Connections < NPS 4"	Pressure Boundary	Stainless Steel	Treated Water (Internal) > 140 F	Loss of Material/Pitting and Crevice Corrosion	One-Time Inspection	IV.C1-14	3.1.1-15	A
Class 1 Piping, Fittings and Branch Connections < NPS 4"	Pressure Boundary	Stainless Steel	Treated Water (Internal) > 140 F	Loss of Material/Pitting and Crevice Corrosion	Water Chemistry	IV.C1-14	3.1.1-15	B
Cyclone Separator (on RHR Pump)	Pressure Boundary	Stainless Steel	Air - Indoor (External)	None	None	V.F-12	3.2.1-53	A
Cyclone Separator (on RHR Pump)	Pressure Boundary	Stainless Steel	Treated Water (Internal)	Loss of Material/Pitting and Crevice Corrosion	One-Time Inspection	V.D2-28	3.2.1-5	A
Cyclone Separator (on RHR Pump)	Pressure Boundary	Stainless Steel	Treated Water (Internal)	Loss of Material/Pitting and Crevice Corrosion	Water Chemistry	V.D2-28	3.2.1-5	B
Flow Element	Pressure Boundary	Stainless Steel	Air - Indoor (External)	None	None	V.F-12	3.2.1-53	A
Flow Element	Pressure Boundary	Stainless Steel	Treated Water (Internal)	Loss of Material/Pitting and Crevice Corrosion	One-Time Inspection	V.D2-28	3.2.1-5	A
Flow Element	Pressure Boundary	Stainless Steel	Treated Water (Internal)	Loss of Material/Pitting and Crevice Corrosion	Water Chemistry	V.D2-28	3.2.1-5	B
Heat Exchanger Components (RHR)	Evaluated with the Closed Cycle Cooling Water System	Not Applicable	Not Applicable	Not Applicable	Not Applicable			

Table 3.2.2-7 Residual Heat Removal (RHR) System (Continued)

Component Type	Intended Function	Material	Environment	Aging Effect Requiring Management	Aging Management Programs	NUREG-1801 Vol. 2 Item	Table 1 Item	Notes
Piping and Fittings	Leakage Boundary	Carbon Steel	Air - Indoor (External)	Loss of Material/General Corrosion	External Surfaces Monitoring	V.E-7	3.2.1-31	A
Piping and Fittings	Leakage Boundary	Carbon Steel	Treated Water (Internal)	Loss of Material/General, Pitting and Crevice Corrosion	One-Time Inspection	V.D2-33	3.2.1-14	A
Piping and Fittings	Leakage Boundary	Carbon Steel	Treated Water (Internal)	Loss of Material/General, Pitting and Crevice Corrosion	Water Chemistry	V.D2-33	3.2.1-14	B
Piping and Fittings	Leakage Boundary	Stainless Steel	Air - Indoor (External)	None	None	V.F-12	3.2.1-53	A
Piping and Fittings	Leakage Boundary	Stainless Steel	Treated Water (Internal)	Loss of Material/Pitting and Crevice Corrosion	One-Time Inspection	V.D2-28	3.2.1-5	A
Piping and Fittings	Leakage Boundary	Stainless Steel	Treated Water (Internal)	Loss of Material/Pitting and Crevice Corrosion	Water Chemistry	V.D2-28	3.2.1-5	B
Piping and Fittings	Pressure Boundary	Carbon Steel	Air - Indoor (External)	Loss of Material/General Corrosion	External Surfaces Monitoring	V.E-7	3.2.1-31	A
Piping and Fittings	Pressure Boundary	Carbon Steel	Air/Gas - Wetted (Internal)	Loss of Material/General, Pitting and Crevice Corrosion	Inspection of Internal Surfaces in Miscellaneous Piping and Ducting Components	V.D2-17	3.2.1-34	A
Piping and Fittings	Pressure Boundary	Carbon Steel	Treated Water (External)	Loss of Material/General, Pitting and Crevice Corrosion	One-Time Inspection	V.D2-33	3.2.1-14	A
Piping and Fittings	Pressure Boundary	Carbon Steel	Treated Water (External)	Loss of Material/General, Pitting and Crevice Corrosion	Water Chemistry	V.D2-33	3.2.1-14	B
Piping and Fittings	Pressure Boundary	Carbon Steel	Treated Water (Internal)	Cumulative Fatigue Damage/Fatigue	TLAA	V.D2-32	3.2.1-1	A, 2
Piping and Fittings	Pressure Boundary	Carbon Steel	Treated Water (Internal)	Loss of Material/Galvanic Corrosion	One-Time Inspection	VIII.E-7	3.4.1-5	C
Piping and Fittings	Pressure Boundary	Carbon Steel	Treated Water (Internal)	Loss of Material/Galvanic Corrosion	Water Chemistry	VIII.E-7	3.4.1-5	D
Piping and Fittings	Pressure Boundary	Carbon Steel	Treated Water (Internal)	Loss of Material/General, Pitting and Crevice Corrosion	One-Time Inspection	V.D2-33	3.2.1-14	A

Table 3.2.2-7 Residual Heat Removal (RHR) System (Continued)

Component Type	Intended Function	Material	Environment	Aging Effect Requiring Management	Aging Management Programs	NUREG-1801 Vol. 2 Item	Table 1 Item	Notes
Piping and Fittings	Pressure Boundary	Carbon Steel	Treated Water (Internal)	Loss of Material/General, Pitting and Crevice Corrosion	Water Chemistry	V.D2-33	3.2.1-14	B
Piping and Fittings	Pressure Boundary	Stainless Steel	Air - Indoor (External)	None	None	V.F-12	3.2.1-53	A
Piping and Fittings	Pressure Boundary	Stainless Steel	Treated Water (Internal)	Loss of Material/Pitting and Crevice Corrosion	One-Time Inspection	V.D2-28	3.2.1-5	A
Piping and Fittings	Pressure Boundary	Stainless Steel	Treated Water (Internal)	Loss of Material/Pitting and Crevice Corrosion	Water Chemistry	V.D2-28	3.2.1-5	B
Piping and Fittings (Class 1)	Pressure Boundary	Carbon Steel	Air - Indoor (External)	Loss of Material/General Corrosion	External Surfaces Monitoring	V.E-7	3.2.1-31	A
Piping and Fittings (Class 1)	Pressure Boundary	Carbon Steel	Treated Water (Internal)	Cumulative Fatigue Damage/Fatigue	TLAA	IV.C1-15	3.1.1-3	A, 2
Piping and Fittings (Class 1)	Pressure Boundary	Carbon Steel	Treated Water (Internal)	Loss of Material/Galvanic Corrosion	One-Time Inspection	VIII.E-7	3.4.1-5	C
Piping and Fittings (Class 1)	Pressure Boundary	Carbon Steel	Treated Water (Internal)	Loss of Material/Galvanic Corrosion	Water Chemistry	VIII.E-7	3.4.1-5	D
Piping and Fittings (Class 1)	Pressure Boundary	Carbon Steel	Treated Water (Internal)	Loss of Material/General, Pitting and Crevice Corrosion	One-Time Inspection	IV.C1-6	3.1.1-13	C
Piping and Fittings (Class 1)	Pressure Boundary	Carbon Steel	Treated Water (Internal)	Loss of Material/General, Pitting and Crevice Corrosion	Water Chemistry	IV.C1-6	3.1.1-13	D
Piping and Fittings (Class 1)	Pressure Boundary	Stainless Steel	Air - Indoor (External)	None	None	IV.E-2	3.1.1-86	A
Piping and Fittings (Class 1)	Pressure Boundary	Stainless Steel	Treated Water (Internal) > 140 F	Cracking/Stress Corrosion Cracking	BWR Stress Corrosion Cracking	V.D2-29	3.2.1-18	A
Piping and Fittings (Class 1)	Pressure Boundary	Stainless Steel	Treated Water (Internal) > 140 F	Cracking/Stress Corrosion Cracking	Water Chemistry	V.D2-29	3.2.1-18	B
Piping and Fittings (Class 1)	Pressure Boundary	Stainless Steel	Treated Water (Internal) > 140 F	Cumulative Fatigue Damage/Fatigue	TLAA	IV.C1-15	3.1.1-3	A, 2
Piping and Fittings (Class 1)	Pressure Boundary	Stainless Steel	Treated Water (Internal) > 140 F	Loss of Material/Pitting and Crevice Corrosion	One-Time Inspection	IV.C1-14	3.1.1-15	A

Table 3.2.2-7 Residual Heat Removal (RHR) System (Continued)

Component Type	Intended Function	Material	Environment	Aging Effect Requiring Management	Aging Management Programs	NUREG-1801 Vol. 2 Item	Table 1 Item	Notes
Piping and Fittings (Class 1)	Pressure Boundary	Stainless Steel	Treated Water (Internal) > 140 F	Loss of Material/Pitting and Crevice Corrosion	Water Chemistry	IV.C1-14	3.1.1-15	B
Pump Casing (Jockey)	Pressure Boundary	Stainless Steel	Air - Indoor (External)	None	None	V.F-12	3.2.1-53	A
Pump Casing (Jockey)	Pressure Boundary	Stainless Steel	Treated Water (Internal)	Loss of Material/Pitting and Crevice Corrosion	One-Time Inspection	V.D2-28	3.2.1-5	A
Pump Casing (Jockey)	Pressure Boundary	Stainless Steel	Treated Water (Internal)	Loss of Material/Pitting and Crevice Corrosion	Water Chemistry	V.D2-28	3.2.1-5	B
Pump Casing (RHR)	Pressure Boundary	Ductile Cast Iron	Air - Indoor (External)	Loss of Material/General Corrosion	External Surfaces Monitoring	V.E-7	3.2.1-31	A
Pump Casing (RHR)	Pressure Boundary	Ductile Cast Iron	Treated Water (Internal)	Loss of Material/General, Pitting and Crevice Corrosion	One-Time Inspection	V.D2-33	3.2.1-14	A
Pump Casing (RHR)	Pressure Boundary	Ductile Cast Iron	Treated Water (Internal)	Loss of Material/General, Pitting and Crevice Corrosion	Water Chemistry	V.D2-33	3.2.1-14	B
Restricting Orifices	Pressure Boundary	Stainless Steel	Air - Indoor (External)	None	None	V.F-12	3.2.1-53	A
Restricting Orifices	Pressure Boundary	Stainless Steel	Treated Water (Internal)	Loss of Material/Pitting and Crevice Corrosion	One-Time Inspection	V.D2-28	3.2.1-5	A
Restricting Orifices	Pressure Boundary	Stainless Steel	Treated Water (Internal)	Loss of Material/Pitting and Crevice Corrosion	Water Chemistry	V.D2-28	3.2.1-5	B
Restricting Orifices	Throttle	Stainless Steel	Air - Indoor (External)	None	None	V.F-12	3.2.1-53	A
Restricting Orifices	Throttle	Stainless Steel	Treated Water (Internal)	Loss of Material/Pitting and Crevice Corrosion	One-Time Inspection	V.D2-28	3.2.1-5	A
Restricting Orifices	Throttle	Stainless Steel	Treated Water (Internal)	Loss of Material/Pitting and Crevice Corrosion	Water Chemistry	V.D2-28	3.2.1-5	B
Restricting Orifices (Class 1)	Pressure Boundary	Stainless Steel	Air - Indoor (External)	None	None	IV.E-2	3.1.1-86	A
Restricting Orifices (Class 1)	Pressure Boundary	Stainless Steel	Treated Water (Internal) > 140 F	Cracking/Stress Corrosion Cracking	ASME Section XI Inservice Inspection, Subsections IWB, IWC, and IWD	IV.C1-1	3.1.1-48	E, 4

Table 3.2.2-7 Residual Heat Removal (RHR) System (Continued)

Component Type	Intended Function	Material	Environment	Aging Effect Requiring Management	Aging Management Programs	NUREG-1801 Vol. 2 Item	Table 1 Item	Notes
Restricting Orifices (Class 1)	Pressure Boundary	Stainless Steel	Treated Water (Internal) > 140 F	Cracking/Stress Corrosion Cracking	Water Chemistry	IV.C1-1	3.1.1-48	E, 4
Restricting Orifices (Class 1)	Pressure Boundary	Stainless Steel	Treated Water (Internal) > 140 F	Loss of Material/Pitting and Crevice Corrosion	One-Time Inspection	IV.C1-14	3.1.1-15	A
Restricting Orifices (Class 1)	Pressure Boundary	Stainless Steel	Treated Water (Internal) > 140 F	Loss of Material/Pitting and Crevice Corrosion	Water Chemistry	IV.C1-14	3.1.1-15	B
Restricting Orifices (Class 1)	Throttle	Stainless Steel	Air - Indoor (External)	None	None	IV.E-2	3.1.1-86	A
Restricting Orifices (Class 1)	Throttle	Stainless Steel	Treated Water (Internal) > 140 F	Cracking/Stress Corrosion Cracking	ASME Section XI Inservice Inspection, Subsections IWB, IWC, and IWD	IV.C1-1	3.1.1-48	E, 4
Restricting Orifices (Class 1)	Throttle	Stainless Steel	Treated Water (Internal) > 140 F	Cracking/Stress Corrosion Cracking	Water Chemistry	IV.C1-1	3.1.1-48	E, 4
Restricting Orifices (Class 1)	Throttle	Stainless Steel	Treated Water (Internal) > 140 F	Loss of Material/Pitting and Crevice Corrosion	One-Time Inspection	IV.C1-14	3.1.1-15	A
Restricting Orifices (Class 1)	Throttle	Stainless Steel	Treated Water (Internal) > 140 F	Loss of Material/Pitting and Crevice Corrosion	Water Chemistry	IV.C1-14	3.1.1-15	B
Sight Glasses	Leakage Boundary	Glass	Air - Indoor (External)	None	None	V.F-6	3.2.1-52	A
Sight Glasses	Leakage Boundary	Glass	Treated Water (Internal)	None	None	V.F-10	3.2.1-52	A
Sight Glasses	Leakage Boundary	Gray Cast Iron	Air - Indoor (External)	Loss of Material/General Corrosion	External Surfaces Monitoring	V.E-7	3.2.1-31	A
Sight Glasses	Leakage Boundary	Gray Cast Iron	Treated Water (Internal)	Loss of Material/General, Pitting and Crevice Corrosion	One-Time Inspection	V.D2-33	3.2.1-14	A
Sight Glasses	Leakage Boundary	Gray Cast Iron	Treated Water (Internal)	Loss of Material/General, Pitting and Crevice Corrosion	Water Chemistry	V.D2-33	3.2.1-14	B
Sight Glasses	Leakage Boundary	Gray Cast Iron	Treated Water (Internal)	Loss of Material/Selective Leaching	Selective Leaching of Materials	V.A-18	3.2.1-44	C
Spray Nozzles	Spray	Stainless Steel	Air - Indoor (External)	None	None	V.F-12	3.2.1-53	A
Spray Nozzles	Spray	Stainless Steel	Air/Gas - Wetted (Internal)	Loss of Material/Pitting and Crevice Corrosion	Periodic Inspection	V.D2-35	3.2.1-8	E, 5

Table 3.2.2-7 Residual Heat Removal (RHR) System (Continued)

Component Type	Intended Function	Material	Environment	Aging Effect Requiring Management	Aging Management Programs	NUREG-1801 Vol. 2 Item	Table 1 Item	Notes
Strainer	Filter	Stainless Steel	Treated Water (External)	Loss of Material/Pitting and Crevice Corrosion	One-Time Inspection	V.D2-28	3.2.1-5	A
Strainer	Filter	Stainless Steel	Treated Water (External)	Loss of Material/Pitting and Crevice Corrosion	Water Chemistry	V.D2-28	3.2.1-5	B
Strainer	Filter	Stainless Steel	Treated Water (Internal)	Loss of Material/Pitting and Crevice Corrosion	One-Time Inspection	V.D2-28	3.2.1-5	A
Strainer	Filter	Stainless Steel	Treated Water (Internal)	Loss of Material/Pitting and Crevice Corrosion	Water Chemistry	V.D2-28	3.2.1-5	B
Strainer	Pressure Boundary	Stainless Steel	Treated Water (External)	Loss of Material/Pitting and Crevice Corrosion	One-Time Inspection	V.D2-28	3.2.1-5	A
Strainer	Pressure Boundary	Stainless Steel	Treated Water (External)	Loss of Material/Pitting and Crevice Corrosion	Water Chemistry	V.D2-28	3.2.1-5	B
Strainer	Pressure Boundary	Stainless Steel	Treated Water (Internal)	Loss of Material/Pitting and Crevice Corrosion	One-Time Inspection	V.D2-28	3.2.1-5	A
Strainer	Pressure Boundary	Stainless Steel	Treated Water (Internal)	Loss of Material/Pitting and Crevice Corrosion	Water Chemistry	V.D2-28	3.2.1-5	B
Thermowell	Pressure Boundary	Stainless Steel	Air - Indoor (External)	None	None	V.F-12	3.2.1-53	A
Thermowell	Pressure Boundary	Stainless Steel	Treated Water (Internal)	Loss of Material/Pitting and Crevice Corrosion	One-Time Inspection	V.D2-28	3.2.1-5	A
Thermowell	Pressure Boundary	Stainless Steel	Treated Water (Internal)	Loss of Material/Pitting and Crevice Corrosion	Water Chemistry	V.D2-28	3.2.1-5	B
Valve Body	Leakage Boundary	Carbon Steel	Air - Indoor (External)	Loss of Material/General Corrosion	External Surfaces Monitoring	V.E-7	3.2.1-31	A
Valve Body	Leakage Boundary	Carbon Steel	Treated Water (Internal)	Loss of Material/General, Pitting and Crevice Corrosion	One-Time Inspection	V.D2-33	3.2.1-14	A
Valve Body	Leakage Boundary	Carbon Steel	Treated Water (Internal)	Loss of Material/General, Pitting and Crevice Corrosion	Water Chemistry	V.D2-33	3.2.1-14	B
Valve Body	Leakage Boundary	Stainless Steel	Air - Indoor (External)	None	None	V.F-12	3.2.1-53	A
Valve Body	Leakage Boundary	Stainless Steel	Treated Water (Internal)	Loss of Material/Pitting and Crevice Corrosion	One-Time Inspection	V.D2-28	3.2.1-5	A

Table 3.2.2-7 Residual Heat Removal (RHR) System (Continued)

Component Type	Intended Function	Material	Environment	Aging Effect Requiring Management	Aging Management Programs	NUREG-1801 Vol. 2 Item	Table 1 Item	Notes
Valve Body	Leakage Boundary	Stainless Steel	Treated Water (Internal)	Loss of Material/Pitting and Crevice Corrosion	Water Chemistry	V.D2-28	3.2.1-5	B
Valve Body	Pressure Boundary	Carbon Steel	Air - Indoor (External)	Loss of Material/General Corrosion	External Surfaces Monitoring	V.E-7	3.2.1-31	A
Valve Body	Pressure Boundary	Carbon Steel	Treated Water (Internal)	Loss of Material/General, Pitting and Crevice Corrosion	One-Time Inspection	V.D2-33	3.2.1-14	A
Valve Body	Pressure Boundary	Carbon Steel	Treated Water (Internal)	Loss of Material/General, Pitting and Crevice Corrosion	Water Chemistry	V.D2-33	3.2.1-14	B
Valve Body	Pressure Boundary	Stainless Steel	Air - Indoor (External)	None	None	V.F-12	3.2.1-53	A
Valve Body	Pressure Boundary	Stainless Steel	Treated Water (Internal)	Loss of Material/Pitting and Crevice Corrosion	One-Time Inspection	V.D2-28	3.2.1-5	A
Valve Body	Pressure Boundary	Stainless Steel	Treated Water (Internal)	Loss of Material/Pitting and Crevice Corrosion	Water Chemistry	V.D2-28	3.2.1-5	B
Valve Body (Class 1)	Pressure Boundary	Carbon Steel	Air - Indoor (External)	Loss of Material/General Corrosion	External Surfaces Monitoring	V.E-7	3.2.1-31	A
Valve Body (Class 1)	Pressure Boundary	Carbon Steel	Treated Water (Internal)	Cumulative Fatigue Damage/Fatigue	TLAA	IV.C1-15	3.1.1-3	A, 2
Valve Body (Class 1)	Pressure Boundary	Carbon Steel	Treated Water (Internal)	Loss of Material/General, Pitting and Crevice Corrosion	One-Time Inspection	IV.C1-6	3.1.1-13	C
Valve Body (Class 1)	Pressure Boundary	Carbon Steel	Treated Water (Internal)	Loss of Material/General, Pitting and Crevice Corrosion	Water Chemistry	IV.C1-6	3.1.1-13	D
Valve Body (Class 1)	Pressure Boundary	Stainless Steel	Air - Indoor (External)	None	None	IV.E-2	3.1.1-86	A
Valve Body (Class 1)	Pressure Boundary	Stainless Steel	Treated Water (Internal) > 140 F	Cracking/Stress Corrosion Cracking	ASME Section XI Inservice Inspection, Subsections IWB, IWC, and IWD	IV.C1-1	3.1.1-48	E, 4
Valve Body (Class 1)	Pressure Boundary	Stainless Steel	Treated Water (Internal) > 140 F	Cracking/Stress Corrosion Cracking	Water Chemistry	IV.C1-1	3.1.1-48	E, 4

Table 3.2.2-7 Residual Heat Removal (RHR) System (Continued)

Component Type	Intended Function	Material	Environment	Aging Effect Requiring Management	Aging Management Programs	NUREG-1801 Vol. 2 Item	Table 1 Item	Notes
Valve Body (Class 1)	Pressure Boundary	Stainless Steel	Treated Water (Internal) > 140 F	Loss of Material/Pitting and Crevice Corrosion	One-Time Inspection	IV.C1-14	3.1.1-15	A
Valve Body (Class 1)	Pressure Boundary	Stainless Steel	Treated Water (Internal) > 140 F	Loss of Material/Pitting and Crevice Corrosion	Water Chemistry	IV.C1-14	3.1.1-15	B

Notes	Definition of Note
A	Consistent with NUREG-1801 item for component, material, environment, and aging effect. AMP is consistent with NUREG-1801 AMP.
B	Consistent with NUREG-1801 item for component, material, environment, and aging effect. AMP takes some exceptions to NUREG-1801 AMP.
C	Component is different, but consistent with NUREG-1801 item for material, environment, and aging effect. AMP is consistent with NUREG-1801 AMP.
D	Component is different, but consistent with NUREG-1801 item for material, environment, and aging effect. AMP takes some exceptions to NUREG-1801 AMP.
E	Consistent with NUREG-1801 item for material, environment and aging effect, but a different aging management program is credited or NUREG-1801 identifies a plant-specific aging management program.
F	Material not in NUREG-1801 for this component.
G	Environment not in NUREG-1801 for this component and material.
H	Aging effect not in NUREG-1801 for this component, material and environment combination.
I	Aging effect in NUREG-1801 for this component, material and environment combination is not applicable.
J	Neither the component nor the material and environment combination is evaluated in NUREG-1801.

Plant Specific Notes:

1. The aging effects for closure bolting in a treated water environment include loss of material and loss of preload. Loss of preload is managed through the Bolting Integrity aging management program. Loss of material for bolting in a submerged environment is managed in conjunction with the Water Chemistry and One Time Inspection aging management programs.

2. The TLAA designation in the Aging Management Program column indicates fatigue of this component is evaluated in Section 4.3.

3. The NUREG-1801 "One-Time Inspection of ASME Code Class 1 Small-Bore Piping" aging management program is applicable only to plants that have not experienced cracking of ASME Code Class 1 small-bore piping. Based on previous Hope Creek operating experience with Class 1 small-bore pipe cracking, a new plant-specific periodic inspection program will be used. The "Small-Bore Class 1 Piping Inspection" aging management program is a plant-specific periodic program that will be implemented to manage cracking by periodic volumetric examinations of small-bore Class 1 piping.

4. The Water Chemistry and ASME Section XI In-service Inspection, Subsections IWB, IWC, and IWD aging management programs will be used to manage the aging effect of cracking in restricting orifices and valve bodies < NPS 4".

5. NUREG-1801 specifies a plant specific program. The Periodic Inspection program is used to manage the aging effects applicable to this component type, material and environment.

Table 3.2.2-8
Vacuum Relief Valve System
Summary of Aging Management Evaluation

Table 3.2.2-8 Vacuum Relief Valve System

Component Type	Intended Function	Material	Environment	Aging Effect Requiring Management	Aging Management Programs	NUREG-1801 Vol. 2 Item	Table 1 Item	Notes
Bolting	Mechanical Closure	Carbon and Low Alloy Steel Bolting	Air - Indoor (External)	Loss of Material/General, Pitting and Crevice Corrosion	Bolting Integrity	V.E-4	3.2.1-23	B
Bolting	Mechanical Closure	Carbon and Low Alloy Steel Bolting	Air - Indoor (External)	Loss of Preload/Thermal Effects, Gasket Creep, and Self-Loosening	Bolting Integrity	V.E-5	3.2.1-24	B
Piping and Fittings	Pressure Boundary	Carbon Steel	Air - Indoor (External)	Loss of Material/General Corrosion	External Surfaces Monitoring	V.B-3	3.2.1-31	A
Piping and Fittings	Pressure Boundary	Carbon Steel	Air/Gas - Wetted (Internal)	Loss of Material/General, Pitting and Crevice Corrosion	Inspection of Internal Surfaces in Miscellaneous Piping and Ducting Components	V.D2-17	3.2.1-34	A
Piping and Fittings	Pressure Boundary	Stainless Steel	Air - Indoor (External)	None	None	V.F-12	3.2.1-53	A
Piping and Fittings	Pressure Boundary	Stainless Steel	Air/Gas - Wetted (Internal)	Loss of Material/Pitting and Crevice Corrosion	Periodic Inspection	V.D2-35	3.2.1-8	E, 1
Valve Body	Pressure Boundary	Carbon Steel	Air - Indoor (External)	Loss of Material/General Corrosion	External Surfaces Monitoring	V.B-3	3.2.1-31	A
Valve Body	Pressure Boundary	Carbon Steel	Air/Gas - Wetted (Internal)	Loss of Material/General, Pitting and Crevice Corrosion	Inspection of Internal Surfaces in Miscellaneous Piping and Ducting Components	V.D2-17	3.2.1-34	A
Valve Body	Pressure Boundary	Stainless Steel	Air - Indoor (External)	None	None	V.F-12	3.2.1-53	A
Valve Body	Pressure Boundary	Stainless Steel	Air/Gas - Wetted (Internal)	Loss of Material/Pitting and Crevice Corrosion	Periodic Inspection	V.D2-35	3.2.1-8	E, 1

Notes	Definition of Note
A	Consistent with NUREG-1801 item for component, material, environment, and aging effect. AMP is consistent with NUREG-1801 AMP.
B	Consistent with NUREG-1801 item for component, material, environment, and aging effect. AMP takes some exceptions to NUREG-1801 AMP.
C	Component is different, but consistent with NUREG-1801 item for material, environment, and aging effect. AMP is consistent with NUREG-1801 AMP.
D	Component is different, but consistent with NUREG-1801 item for material, environment, and aging effect. AMP takes some exceptions to NUREG-1801 AMP.
E	Consistent with NUREG-1801 item for material, environment and aging effect, but a different aging management program is credited or NUREG-1801 identifies a plant-specific aging management program.
F	Material not in NUREG-1801 for this component.
G	Environment not in NUREG-1801 for this component and material.
H	Aging effect not in NUREG-1801 for this component, material and environment combination.
I	Aging effect in NUREG-1801 for this component, material and environment combination is not applicable.
J	Neither the component nor the material and environment combination is evaluated in NUREG-1801.

Plant Specific Notes:

1. NUREG-1801 specifies a plant-specific program. The Periodic Inspection program is used to manage the aging effect(s) applicable to this component type, material, and environment combination.

3.3 AGING MANAGEMENT OF AUXILIARY SYSTEMS

3.3.1 INTRODUCTION

This section provides the results of the aging management review for those components identified in Section 2.3.3, Auxiliary Systems, as being subject to aging management review. The systems, or portions of systems, which are addressed in this section are described in the indicated sections.

- Chilled Water System (2.3.3.1)
- Closed Cycle Cooling Water System (2.3.3.2)
- Compressed Air System (2.3.3.3)
- Containment Inerting and Purging System (2.3.3.4)
- Control Area Chilled Water System (2.3.3.5)
- Control Rod Drive System (2.3.3.6)
- Control Room and Control Area HVAC Systems (2.3.3.7)
- Cranes & Hoists (2.3.3.8)
- Equipment and Floor Drainage System (2.3.3.9)
- Fire Protection System (2.3.3.10)
- Fire Pump House Ventilation System (2.3.3.11)
- Fresh Water Supply System (2.3.3.12)
- Fuel Handling and Storage System (2.3.3.13)
- Fuel Pool Cooling and Cleanup System (2.3.3.14)
- Hardened Torus Vent System (2.3.3.15)
- Hydrogen Water Chemistry System (2.3.3.16)
- Leak Detection and Radiation Monitoring System (2.3.3.17)
- Makeup Demineralizer System (2.3.3.18)
- Primary Containment Instrument Gas System (2.3.3.19)
- Primary Containment Leakage Rate Testing System (2.3.3.20)
- Process and Post-Accident Sampling Systems (2.3.3.21)
- Radwaste System (2.3.3.22)
- Reactor Building Ventilation System (2.3.3.23)
- Reactor Water Cleanup System (2.3.3.24)
- Remote Shutdown Panel Room HVAC System (2.3.3.25)
- Service Water Intake Ventilation System (2.3.3.26)
- Service Water System (2.3.3.27)
- Standby Diesel Generator Area Ventilation Systems (2.3.3.28)
- Standby Diesel Generators and Auxiliary Systems (2.3.3.29)
- Standby Liquid Control System (2.3.3.30)
- Torus Water Cleanup System (2.3.3.31)
- Traversing Incore Probe System (2.3.3.32)

3.3.2 RESULTS

The following tables summarize the results of the aging management review for Auxiliary Systems.

Table 3.3.2-1 Summary of Aging Management Evaluation – Chilled Water System

Table 3.3.2-2 Summary of Aging Management Evaluation – Closed Cycle Cooling Water System

Table 3.3.2-3 Summary of Aging Management Evaluation – Compressed Air System

Table 3.3.2-4 Summary of Aging Management Evaluation – Containment Inerting and Purging System

Table 3.3.2-5 Summary of Aging Management Evaluation – Control Area Chilled Water System

Table 3.3.2-6 Summary of Aging Management Evaluation – Control Rod Drive System

Table 3.3.2-7 Summary of Aging Management Evaluation – Control Room and Control Area HVAC Systems

Table 3.3.2-8 Summary of Aging Management Evaluation – Cranes & Hoists

Table 3.3.2-9 Summary of Aging Management Evaluation – Equipment and Floor Drainage System

Table 3.3.2-10 Summary of Aging Management Evaluation – Fire Protection System

Table 3.3.2-11 Summary of Aging Management Evaluation – Fire Pump House Ventilation System

Table 3.3.2-12 Summary of Aging Management Evaluation – Fresh Water Supply System

Table 3.3.2-13 Summary of Aging Management Evaluation – Fuel Handling and Storage System

Table 3.3.2-14 Summary of Aging Management Evaluation – Fuel Pool Cooling and Cleanup System

Table 3.3.2-15 Summary of Aging Management Evaluation – Hardened Torus Vent System

Table 3.3.2-16 Summary of Aging Management Evaluation – Hydrogen Water Chemistry System

Table 3.3.2-17 Summary of Aging Management Evaluation – Leak Detection and Radiation Monitoring System

Table 3.3.2-18 Summary of Aging Management Evaluation – Makeup Demineralizer System

Table 3.3.2-19 Summary of Aging Management Evaluation – Primary Containment Instrument Gas System

Table 3.3.2-20 Summary of Aging Management Evaluation – Primary Containment Leakage Rate Testing System

Table 3.3.2-21 Summary of Aging Management Evaluation – Process and Post-Accident Sampling Systems

Table 3.3.2-22 Summary of Aging Management Evaluation – Radwaste System

Table 3.3.2-23 Summary of Aging Management Evaluation – Reactor Building Ventilation System

Table 3.3.2-24 Summary of Aging Management Evaluation – Reactor Water Cleanup System

Table 3.3.2-25 Summary of Aging Management Evaluation – Remote Shutdown Panel Room HVAC System

Table 3.3.2-26 Summary of Aging Management Evaluation – Service Water Intake Ventilation System

Table 3.3.2-27 Summary of Aging Management Evaluation – Service Water System

Table 3.3.2-28 Summary of Aging Management Evaluation Standby Diesel Generator Area Ventilation Systems

Table 3.3.2-29 Summary of Aging Management Evaluation Standby Diesel Generators and Auxiliary Systems

Table 3.3.2-30 Summary of Aging Management Evaluation - Standby Liquid Control System

Table 3.3.2-31 Summary of Aging Management Evaluation – Torus Water Cleanup System

Table 3.3.2-32 Summary of Aging Management Evaluation – Traversing Incore Probe System

3.3.2.1 Materials, Environments, Aging Effects Requiring Management And Aging Managements Programs

3.3.2.1.1 Chilled Water System

Materials

The materials of construction for the Chilled Water System components are:

- Carbon and Low Alloy Steel Bolting
- Carbon Steel
- Copper Alloy with less than 15% Zinc
- Ductile Cast Iron
- Gray Cast Iron
- Stainless Steel

Environments

The Chilled Water System components are exposed to the following environments:

- Air - Indoor
- Air/Gas - Wetted
- Closed Cycle Cooling Water

Aging Effects/Mechanisms Requiring Management

The following aging effects associated with the Chilled Water System components require management:

- Loss of Material/General, Pitting, Crevice and Galvanic Corrosion
- Loss of Material/Selective Leaching
- Loss of Preload/Thermal Effects, Gasket Creep, and Self-Loosening

Aging Management Programs

The following aging management programs manage the aging effects for the Chilled Water System components:

- Bolting Integrity (B.2.1.12)
- Closed-Cycle Cooling Water System (B.2.1.14)
- External Surfaces Monitoring (B.2.1.25)
- Periodic Inspection (B.2.2.2)
- Selective Leaching of Materials (B.2.1.23)

Table 3.3.2-1, Summary of Aging Management Evaluation – Chilled Water System summarizes the results of the aging management review for the Chilled Water System.

3.3.2.1.2 Closed Cycle Cooling Water System

Materials

The materials of construction for the Closed Cycle Cooling Water System components are:

- Aluminum
- Carbon and Low Alloy Steel Bolting
- Carbon Steel
- Copper Alloy with 15% Zinc or More
- Copper Alloy with less than 15% Zinc
- Gray Cast Iron
- Stainless Steel

Environments

The Closed Cycle Cooling Water System components are exposed to the following environments:

- Air - Indoor
- Air/Gas - Dry
- Air/Gas - Wetted
- Closed Cycle Cooling Water
- Lubricating Oil
- Raw Water
- Treated Water

Aging Effects/Mechanisms Requiring Management

The following aging effects associated with the Closed Cycle Cooling Water System components require management:

- Loss of Material/Galvanic Corrosion
- Loss of Material/General, Pitting, Crevice, and Microbiologically Influenced Corrosion
- Loss of Material/Selective Leaching
- Loss of Preload/Thermal Effects, Gasket Creep, and Self-Loosening
- Reduction of Heat Transfer/Fouling

Aging Management Programs

The following aging management programs manage the aging effects for the Closed Cycle Cooling Water System components:

- Bolting Integrity (B.2.1.12)
- Closed-Cycle Cooling Water System (B.2.1.14)
- External Surfaces Monitoring (B.2.1.25)
- Lubricating Oil Analysis (B.2.1.27)
- One-Time Inspection (B.2.1.22)
- Periodic Inspection (B.2.2.2)
- Selective Leaching of Materials (B.2.1.23)
- Water Chemistry (B.2.1.2)

Table 3.3.2-2, Summary of Aging Management Evaluation – Closed Cycle Cooling Water System summarizes the results of the aging management review for the Closed Cycle Cooling Water System.

3.3.2.1.3 Compressed Air System

Materials

The materials of construction for the Compressed Air System components are:

- Carbon and Low Alloy Steel Bolting
- Carbon Steel
- Stainless Steel

Environments

The Compressed Air System components are exposed to the following environments:

- Air - Indoor
- Air/Gas - Dry

Aging Effects/Mechanisms Requiring Management

The following aging effects associated with the Compressed Air System components require management:

- Loss of Material/General, Pitting and Crevice Corrosion
- Loss of Preload/Thermal Effects, Gasket Creep, and Self- Loosening

Aging Management Programs

The following aging management programs manage the aging effects for the Compressed Air System components:

- Bolting Integrity (B.2.1.12)
- Compressed Air Monitoring (B.2.1.16)
- External Surfaces Monitoring (B.2.1.25)

Table 3.3.2-3, Summary of Aging Management Evaluation – Compressed Air System summarizes the results of the aging management review for the Compressed Air System.

3.3.2.1.4 Containment Inerting and Purging System

Materials

The materials of construction for the Containment Inerting and Purging System components are:

- Carbon and Low Alloy Steel Bolting
- Carbon Steel
- Stainless Steel

Environments

The Containment Inerting and Purging System components are exposed to the following environments:

- Air - Indoor
- Air/Gas - Dry
- Air/Gas - Wetted

Aging Effects/Mechanisms Requiring Management

The following aging effects associated with the Containment Inerting and Purging System components require management:

- Loss of Material/General, Pitting and Crevice Corrosion
- Loss of Preload/Thermal Effects, Gasket Creep, and Self-Loosening

Aging Management Programs

The following aging management programs manage the aging effects for the Containment Inerting and Purging System components:

- Bolting Integrity (B.2.1.12)
- External Surfaces Monitoring (B.2.1.25)

- Inspection of Internal Surfaces in Miscellaneous Piping and Ducting Components (B.2.1.26)
- Periodic Inspection (B.2.2.2)

Table 3.3.2-4, Summary of Aging Management Evaluation – Containment Inerting and Purging System summarizes the results of the aging management review for the Containment Inerting and Purging System.

3.3.2.1.5 Control Area Chilled Water System

Materials

The materials of construction for the Control Area Chilled Water System components are:

- Carbon and Low Alloy Steel Bolting
- Carbon Steel
- Copper Alloy with 15% Zinc or More
- Copper Alloy with less than 15% Zinc
- Glass
- Stainless Steel

Environments

The Control Area Chilled Water System components are exposed to the following environments:

- Air – Indoor
- Air/Gas - Dry
- Air/Gas – Wetted
- Closed Cycle Cooling Water
- Treated Water

Aging Effects/Mechanisms Requiring Management

The following aging effects associated with the Control Area Chilled Water System components require management:

- Loss of Material/General, Pitting, Crevice and Galvanic Corrosion
- Loss of Preload/Thermal Effects, Gasket Creep, and Self-Loosening
- Reduction of Heat Transfer/Fouling

Aging Management Programs

The following aging management programs manage the aging effects for the Control Area Chilled Water System components:

- Bolting Integrity (B.2.1.12)
- Closed-Cycle Cooling Water System (B.2.1.14)
- External Surfaces Monitoring (B.2.1.25)
- Inspection of Internal Surfaces in Miscellaneous Piping and Ducting Components (B.2.1.26)
- One-Time Inspection (B.2.1.22)
- Periodic Inspection (B.2.2.2)
- Water Chemistry (B.2.1.2)

Table 3.3.2-5, Summary of Aging Management Evaluation– Control Area Chilled Water System summarizes the results of the aging management review for Control Area Chilled Water System.

3.3.2.1.6 Control Rod Drive System

Materials

The materials of construction for the Control Rod Drive System components are:

- Carbon and Low Alloy Steel Bolting
- Carbon Steel
- Gray Cast Iron
- Stainless Steel

Environments

The Control Rod Drive System components are exposed to the following environments:

- Air - Indoor
- Air/Gas - Dry
- Air/Gas - Wetted
- Lubricating Oil
- Treated Water
- Treated Water > 140° F

Aging Effects/Mechanisms Requiring Management

The following aging effects associated with the Control Rod Drive System components require management:

- Cracking/Stress Corrosion Cracking
- Loss of Material/General, Pitting, Crevice and Galvanic Corrosion
- Loss of Preload/Thermal Effects, Gasket Creep, and Self-Loosening

Aging Management Programs

The following aging management programs manage the aging effects for the Control Rod Drive System components:

- Bolting Integrity (B.2.1.12)
- External Surfaces Monitoring (B.2.1.25)
- Inspection of Internal Surfaces in Miscellaneous Piping and Ducting Components (B.2.1.26)
- Lubricating Oil Analysis (B.2.1.27)
- One-Time Inspection (B.2.1.22)
- Water Chemistry (B.2.1.2)

Table 3.3.2-6, Summary of Aging Management Evaluation – Control Rod Drive System summarizes the results of the aging management review for the Control Rod Drive System.

3.3.2.1.7 Control Room and Control Area HVAC Systems

Materials

The materials of construction for the Control Room and Control Area HVAC System components are:

- Aluminum
- Aluminum Bolting
- Carbon and Low Alloy Steel Bolting
- Carbon Steel
- Copper Alloy with 15% Zinc or More
- Copper Alloy with less than 15% Zinc
- Elastomer
- Galvanized Steel
- Gray Cast Iron
- Polymer

- Stainless Steel
- Stainless Steel Bolting

Environments

The Control Room and Control Area HVAC System components are exposed to the following environments:

- Air – Indoor
- Air - Outdoor
- Air/Gas - Wetted

Aging Effects/Mechanisms Requiring Management

The following aging effects associated with the Control Room and Control Area HVAC System components require management:

- Hardening and Loss of Strength/Elastomer Degradation
- Loss of Material/General, Pitting, Crevice and Microbiologically Influenced Corrosion

Aging Management Programs

The following aging management programs manage the aging effects for the Control Room and Control Area HVAC System components:

- External Surfaces Monitoring (B.2.1.25)
- Inspection of Internal Surfaces in Miscellaneous Piping and Ducting Components (B.2.1.26)
- Periodic Inspection (B.2.2.2)

Table 3.3.2-7, Summary of Aging Management Evaluation – Control Room and Control Area HVAC Systems summarizes the results of the aging management review for Control Room and Control Area HVAC Systems.

3.3.2.1.8 Cranes & Hoists

Materials

The materials of construction for the Cranes & Hoists components are:

- Carbon and Low Alloy Steel Bolting
- Carbon Steel

Environments

The Cranes & Hoists components are exposed to the following environments:

- Air - Indoor
- Air - Outdoor

Aging Effects/Mechanisms Requiring Management

The following aging effects associated with the Cranes & Hoists components require management:

- Cumulative Fatigue Damage/Fatigue
- Loss of Material/General, Pitting and Crevice Corrosion
- Loss of Material/Wear
- Loss of Preload/Self-Loosening

Aging Management Programs

The following aging management programs manage the aging effects for the Cranes & Hoists components:

- Inspection of Overhead Heavy Load and Light Load (Related to Refueling) Handling Systems (B.2.1.15)
- TLAA

Table 3.3.2-8, Summary of Aging Management Evaluation – Cranes & Hoists summarizes the results of the aging management review for the Cranes & Hoists.

3.3.2.1.9 Equipment and Floor Drainage System

Materials

The materials of construction for the Equipment and Floor Drainage System components are:

- Carbon and Low Alloy Steel Bolting
- Carbon Steel
- Copper Alloy with less than 15% Zinc
- Ductile Cast Iron
- Galvanized Steel
- Gray Cast Iron
- Stainless Steel

Environments

The Equipment and Floor Drainage System components are exposed to the following environments:

- Air - Indoor
- Raw Water

Aging Effects/Mechanisms Requiring Management

The following aging effects associated with the Equipment and Floor Drainage System components require management:

- Loss of Material/General, Pitting, Crevice, Galvanic, and Microbiologically Influenced Corrosion, and Fouling
- Loss of Material/Selective Leaching
- Loss of Preload/Thermal Effects, Gasket Creep, and Self-Loosening

Aging Management Programs

The following aging management programs manage the aging effects for the Equipment and Floor Drainage System components:

- Bolting Integrity (B.2.1.12)
- External Surfaces Monitoring (B.2.1.25)
- Inspection of Internal Surfaces in Miscellaneous Piping and Ducting Components (B.2.1.26)
- Periodic Inspection (B.2.2.2)
- Selective Leaching of Materials (B.2.1.23)

Table 3.3.2-9, Summary of Aging Management Evaluation – Equipment and Floor Drainage System summarizes the results of the aging management review for the Equipment and Floor Drainage System.

3.3.2.1.10 Fire Protection System

Materials

The materials of construction for the Fire Protection System components are:

- Aluminum
- Alumina Silicate
- Carbon and Low Alloy Steel Bolting
- Carbon Steel
- Concrete
- Copper Alloy with 15% Zinc or More

- Copper Alloy with less than 15% Zinc
- Ductile Cast Iron
- Elastomer
- Galvanized Steel
- Gray Cast Iron
- Grout
- Polymer
- Reinforced Concrete
- Stainless Steel

Environments

The Fire Protection System components are exposed to the following environments:

- Air - Indoor
- Air - Outdoor
- Air/Gas - Dry
- Air/Gas - Wetted
- Fuel Oil
- Groundwater/Soil
- Raw Water
- Soil

Aging Effects/Mechanisms Requiring Management

The following aging effects associated with the Fire Protection System components require management:

- Change in Material Properties
- Cracking/Restraint, Shrinkage, Creep, and Aggressive Environment
- Cracking, Loss of Bond, and Loss of Material (Spalling, Scaling)/Corrosion of Embedded Steel
- Cracks and Distortion/Increased Stress Levels from Settlement
- Increased Hardness, Shrinkage and Loss of Strength/Weathering
- Increase in Porosity and Permeability, Cracking, Loss of Material (Spalling, Scaling)/Aggressive Chemical Attack
- Loss of Material/General, Pitting, Crevice, Galvanic, Microbiologically Influenced Corrosion, and Fouling
- Loss of Material/Wear

- Loss of Material (Spalling, Scaling) and Cracking/Freeze-Thaw
- Loss of Material/Selective Leaching
- Loss of Preload/Thermal Effects, Gasket Creep, and Self-Loosening

Aging Management Programs

The following aging management programs manage the aging effects for the Fire Protection System components:

- Aboveground Steel Tanks (B.2.1.19)
- Bolting Integrity (B.2.1.12)
- Buried Non-Steel Piping Inspection (B.2.2.4)
- Buried Piping Inspection (B.2.1.24)
- External Surfaces Monitoring (B.2.1.25)
- Fire Protection (B.2.1.17)
- Fire Water System (B.2.1.18)
- Fuel Oil Chemistry (B.2.1.20)
- One-Time Inspection (B.2.1.22)
- Periodic Inspection (B.2.2.2)
- Selective Leaching of Materials (B.2.1.23)
- Structures Monitoring Program (B.2.1.32)

Table 3.3.2-10, Summary of Aging Management Evaluation – Fire Protection System summarizes the results of the aging management review for the Fire Protection System.

3.3.2.1.11 Fire Pump House Ventilation System

Materials

The materials of construction for the Fire Pump House Ventilation System components are:

- Carbon Steel
- Aluminum

Environments

The Fire Pump House Ventilation System components are exposed to the following environments:

- Air/Gas - Wetted
- Air – Outdoor

Aging Effects Requiring Management

The following aging effects associated with the Fire Pump House Ventilation System components require management:

- Loss of Material/General, Pitting and Crevice Corrosion

Aging Management Programs

The following aging management programs manage the aging effects for the Fire Pump House Ventilation System components:

- External Surfaces Monitoring (B.2.1.25)
- Inspection of Internal Surfaces in Miscellaneous Piping and Ducting Components (B.2.1.26)
- Periodic Inspection (B.2.2.2)
- Structures Monitoring Program (B.2.1.32)

Table 3.3.2-11, Summary of Aging Management Evaluation – Fire Pump House Ventilation System summarizes the results of the aging management review for the Fire Pump House Ventilation System.

3.3.2.1.12 Fresh Water Supply System

Materials

The materials of construction for the Fresh Water Supply System components are:

- Carbon and Low Alloy Steel Bolting
- Carbon Steel
- Copper Alloy with less than 15% Zinc
- Ductile Cast Iron
- Gray Cast Iron
- Stainless Steel

Environments

The Fresh Water Supply System components are exposed to the following environments:

- Air – Indoor
- Raw Water

Aging Effects/Mechanisms Requiring Management

The following aging effects associated with the Fresh Water Supply System components require management:

- Loss of Material/General, Pitting, Crevice, Galvanic, Microbiologically Influenced Corrosion, and Fouling
- Loss of Material/Selective Leaching
- Loss of Preload/Thermal Effects, Gasket Creep, and Self-Loosening

Aging Management Programs

The following aging management programs manage the aging effects for the Fresh Water Supply System components:

- Bolting Integrity (B.2.1.12)
- External Surfaces Monitoring (B.2.1.25)
- Inspection of Internal Surfaces in Miscellaneous Piping and Ducting Components (B.2.1.26)
- Periodic Inspection (B.2.2.2)
- Selective Leaching of Materials (B.2.1.23)

Table 3.3.2-12 Summary of Aging Management Evaluation – Fresh Water Supply System summarizes the results of the aging management review for the Fresh Water Supply System.

3.3.2.1.13 Fuel Handling and Storage System

Materials

The materials of construction for the Fuel Handling and Storage components are:

- Aluminum
- Boral
- Carbon and Low Alloy Steel Bolting
- Carbon Steel
- Stainless Steel Bolting
- Stainless Steel

Environments

The Fuel Handling and Storage components are exposed to the following environments:

- Air - Indoor
- Treated Water

Aging Effects/Mechanisms Requiring Management

The following aging effects associated with the Fuel Handling and Storage components require management:

- Loss of Material/General, Pitting and Crevice Corrosion
- Loss of Material/Wear
- Loss of Preload/Self-Loosening
- Reduction of Neutron-Absorbing Capacity and Loss of Material/General Corrosion

Aging Management Programs

The following aging management programs manage the aging effects for the Fuel Handling and Storage components:

- Boral Monitoring (B.2.2.5)
- Inspection of Overhead Heavy Load and Light Load (Related to Refueling) Handling Systems (B.2.1.15)
- One-Time Inspection (B.2.1.22)
- Water Chemistry (B.2.1.2)

Table 3.3.2-13, Summary of Aging Management Evaluation – Fuel Handling and Storage System summarizes the results of the aging management review for the Fuel Handling and Storage System.

3.3.2.1.14 Fuel Pool Cooling and Cleanup System

Materials

The materials of construction for the Fuel Pool Cooling and Cleanup System components are:

- Carbon and Low Alloy Steel Bolting
- Carbon Steel
- Stainless Steel
- Stainless Steel Bolting

Environments

The Fuel Pool Cooling and Cleanup System components are exposed to the following environments:

- Air - Indoor
- Air/Gas - Wetted
- Concrete

- Treated Water

Aging Effects/Mechanisms Requiring Management

The following aging effects associated with the Fuel Pool Cooling and Cleanup System components require management:

- Loss of Material/General, Pitting, Crevice and Galvanic Corrosion
- Loss of Preload/Thermal Effects, Gasket Creep, and Self-Loosening

Aging Management Programs

The following aging management programs manage the aging effects for the Fuel Pool Cooling and Cleanup System components:

- Bolting Integrity (B.2.1.12)
- External Surfaces Monitoring (B.2.1.25)
- Inspection of Internal Surfaces in Miscellaneous Piping and Ducting Components (B.2.1.26)
- One-Time Inspection (B.2.1.22)
- Water Chemistry (B.2.1.2)

Table 3.3.2-14, Summary of Aging Management Evaluation – Fuel Pool Cooling and Cleanup System summarizes the results of the aging management review for the Fuel Pool Cooling and Cleanup System.

3.3.2.1.15 Hardened Torus Vent System

Materials

The materials of construction for the Hardened Torus Vent System components are:

- Carbon and Low Alloy Steel Bolting
- Carbon Steel
- Stainless Steel

Environments

The Hardened Torus Vent System components are exposed to the following environments:

- Air - Indoor
- Air/Gas - Wetted

Aging Effects/Mechanisms Requiring Management

The following aging effects associated with the Hardened Torus Vent System components require management:

- Loss of Material/General, Pitting and Crevice Corrosion
- Loss of Preload/Thermal Effects, Gasket Creep, and Self-Loosening

Aging Management Programs

The following aging management programs manage the aging effects for the Hardened Torus Vent System components:

- Bolting Integrity (B.2.1.12)
- External Surfaces Monitoring (B.2.1.25)
- Inspection of Internal Surfaces in Miscellaneous Piping and Ducting Components (B.2.1.26)
- Periodic Inspection (B.2.2.2)

Table 3.3.2-15, Summary of Aging Management Evaluation – Hardened Torus Vent System summarizes the results of the aging management review for the Hardened Torus Vent System.

3.3.2.1.16 Hydrogen Water Chemistry System

Materials

The materials of construction for the Hydrogen Water Chemistry System components are:

- Carbon and Low Alloy Steel
- Stainless Steel

Environments

The Hydrogen Water Chemistry System components are exposed to the following environments:

- Air - Indoor
- Treated Water

Aging Effects/Mechanisms Requiring Management

The following aging effects associated with the Hydrogen Water Chemistry System components require management:

- Loss of Material/General, Pitting and Crevice Corrosion
- Loss of Preload/Thermal Effects, Gasket Creep, and Self-Loosening

Aging Management Programs

The following aging management programs manage the aging effects for the Hydrogen Water Chemistry System components:

- Bolting Integrity (B.2.1.12)
- One-Time Inspection (B.2.1.22)
- Water Chemistry (B.2.1.2)

Table 3.3.2-16, Summary of Aging Management Evaluation – Hydrogen Water Chemistry System summarizes the results of the aging management review for the Hydrogen Water Chemistry System.

3.3.2.1.17 Leak Detection and Radiation Monitoring System

Materials

The materials of construction for the Leak Detection and Radiation Monitoring System components are:

- Carbon and Low Alloy Steel Bolting
- Carbon Steel
- Stainless Steel

Environments

The Leak Detection and Radiation Monitoring System components are exposed to the following environments:

- Air - Indoor
- Air/Gas - Wetted

Aging Effects/Mechanisms Requiring Management

The following aging effects associated with the Leak Detection and Radiation Monitoring System components require management:

- Loss of Material/General, Pitting and Crevice Corrosion
- Loss of Preload/Thermal Effects, Gasket Creep and Self-Loosening

Aging Management Programs

The following aging management programs manage the aging effects for the Leak Detection and Radiation Monitoring System components:

- Bolting Integrity (B.2.1.12)
- External Surfaces Monitoring (B.2.1.25)
- Inspection of Internal Surfaces in Miscellaneous Piping and Ducting Components (B.2.1.26)

- Periodic Inspection (B.2.2.2)

Table 3.3.2-17, Summary of Aging Management Evaluation - Leak Detection and Radiation Monitoring System summarizes the results of the aging management review for the Leak Detection and Radiation Monitoring System.

3.3.2.1.18 Makeup Demineralizer System

Materials

The materials of construction for the Makeup Demineralizer System components are:

- Carbon and Low Alloy Steel Bolting
- Stainless Steel

Environments

The Makeup Demineralizer System components are exposed to the following environments:

- Air – Indoor
- Air/Gas - Wetted
- Treated Water

Aging Effects/Mechanisms Requiring Management

The following aging effects associated with the Makeup Demineralizer System components require management:

- Loss of Material/General, Pitting and Crevice Corrosion
- Loss of Preload/Thermal Effects, Gasket Creep, and Self-Loosening

Aging Management Programs

The following aging management programs manage the aging effects for the Makeup Demineralizer System components:

- Bolting Integrity (B.2.1.12)
- One-Time Inspection (B.2.1.22)
- Periodic Inspection (B.2.2.2)
- Water Chemistry (B.2.1.2)

Table 3.3.2-18, Summary of Aging Management Evaluation – Makeup Demineralizer System summarizes the results of the aging management review for the Makeup Demineralizer System.

3.3.2.1.19 Primary Containment Instrument Gas System

Materials

The materials of construction for the Primary Containment Instrument Gas System components are:

- Carbon and Low Alloy Steel Bolting
- Carbon Steel
- Ductile Cast Iron
- Stainless Steel

Environments

The Primary Containment Instrument Gas System components are exposed to the following environments:

- Air - Indoor
- Air/Gas - Dry
- Air/Gas - Wetted

Aging Effects/Mechanisms Requiring Management

The following aging effects associated with the Primary Containment Instrument Gas System components require management:

- Loss of Material/General, Pitting and Crevice Corrosion
- Loss of Preload/Thermal Effects, Gasket Creep, and Self-Loosening

Aging Management Programs

The following aging management programs manage the aging effects for the Primary Containment Instrument Gas System components:

- Bolting Integrity (B.2.1.12)
- Compressed Air Monitoring (B.2.1.16)
- External Surfaces Monitoring (B.2.1.25)
- Inspection of Internal Surfaces in Miscellaneous Piping and Ducting Components (B.2.1.26)

Table 3.3.2-19, Summary of Aging Management Evaluation – Primary Containment Instrument Gas System summarizes the results of the aging management review for the Primary Containment Instrument Gas System.

3.3.2.1.20 Primary Containment Leakage Rate Testing System

Materials

The materials of construction for the Primary Containment Leakage Rate Testing System components are:

- Carbon and Low Alloy Steel Bolting
- Carbon Steel
- Copper Alloy with less than 15% Zinc
- Stainless Steel

Environments

The Primary Containment Leakage Rate Testing System components are exposed to the following environments:

- Air - Indoor
- Air/Gas – Wetted
- Air/Gas – Dry

Aging Effects/Mechanisms Requiring Management

The following aging effects associated with the Primary Containment Leakage Rate Testing System components require management:

- Loss of Material/General, Pitting and Crevice Corrosion
- Loss of Preload/Thermal Effects, Gasket Creep, and Self-Loosening

Aging Management Programs

The following aging management programs manage the aging effects for the Primary Containment Leakage Rate Testing System components:

- Bolting Integrity (B.2.1.12)
- External Surfaces Monitoring (B.2.1.25)
- Inspection of Internal Surfaces in Miscellaneous Piping and Ducting Components (B.2.1.26)
- Periodic Inspection (B.2.2.2)

Table 3.3.2-20, Summary of Aging Management Evaluation – Primary Containment Leakage Rate Testing System summarizes the results of the aging management review for the Primary Containment Leakage Rate Testing System.

3.3.2.1.21 Process and Post-Accident Sampling Systems

Materials

The materials of construction for the Process and Post-Accident Sampling System components are:

- Carbon and Low Alloy Steel Bolting
- Carbon Steel
- Stainless Steel

Environments

The Process and Post-Accident Sampling System components are exposed to the following environments:

- Air - Indoor
- Air/Gas – Wetted
- Treated Water

Aging Effects/Mechanisms Requiring Management

The following aging effects associated with the Process and Post-Accident Sampling System components require management:

- Loss of Material/General, Pitting and Crevice Corrosion
- Loss of Preload/Thermal Effects, Gasket Creep, and Self-Loosening

Aging Management Programs

The following aging management programs manage the aging effects for the Process and Post-Accident Sampling System components:

- Bolting Integrity (B.2.1.12)
- External Surfaces Monitoring (B.2.1.25)
- Inspection of Internal Surfaces in Miscellaneous Piping and Ducting Components (B.2.1.26)
- One-Time Inspection (B.2.1.22)
- Periodic Inspection (B.2.2.2)
- Water Chemistry (B.2.1.2)

Table 3.3.2-21, Summary of Aging Management Evaluation – Process and Post-Accident Sampling Systems summarizes the results of the aging management review for the Process and Post-Accident Sampling Systems.

3.3.2.1.22 Radwaste System

Materials

The materials of construction for the Radwaste System components are:

- Carbon and Low Alloy Steel Bolting
- Carbon Steel
- Stainless Steel

Environments

The Radwaste System components are exposed to the following environments:

- Air – Indoor
- Raw Water

Aging Effects/Mechanisms Requiring Management

The following aging effects associated with the Radwaste System components require management:

- Loss of Material/General, Pitting, Crevice, and Microbiologically Influenced Corrosion, and Fouling
- Loss of Preload/Thermal Effects, Gasket Creep, and Self-Loosening

Aging Management Programs

The following aging management programs manage the aging effects for the Radwaste System components:

- Bolting Integrity (B.2.1.12)
- External Surfaces Monitoring (B.2.1.25)
- Inspection of Internal Surfaces in Miscellaneous Piping and Ducting Components (B.2.1.26)
- Periodic Inspection (B.2.2.2)

Table 3.3.2-22, Summary of Aging Management Evaluation – Radwaste System summarizes the results of the aging management review for the Radwaste System.

3.3.2.1.23 Reactor Building Ventilation System

Materials

The materials of construction for the Reactor Building Ventilation System components are:

- Aluminum
- Carbon and Low Alloy Steel Bolting
- Carbon Steel
- Copper Alloy with 15% Zinc or More
- Copper Alloy with less than 15% Zinc
- Elastomer
- Galvanized Steel
- Stainless Steel

Environments

The Reactor Building Ventilation System components are exposed to the following environments:

- Air - Indoor
- Air - Outdoor
- Air/Gas - Dry
- Air/Gas - Wetted

Aging Effects/Mechanisms Requiring Management

The following aging effects associated with the Reactor Building Ventilation System components require management:

- Hardening and Loss of Strength/Elastomer Degradation
- Loss of Material/General, Pitting and Crevice Corrosion
- Loss of Preload/Thermal Effects, Gasket Creep, and Self-Loosening

Aging Management Programs

The following aging management programs manage the aging effects for the Reactor Building Ventilation System components:

- Bolting Integrity (B.2.1.12)
- Compressed Air Monitoring (B.2.1.16)
- External Surfaces Monitoring (B.2.1.25)
- Inspection of Internal Surfaces in Miscellaneous Piping and Ducting Components (B.2.1.26)
- Periodic Inspection (B.2.2.2)

Table 3.3.2-23, Summary of Aging Management Evaluation – Reactor Building Ventilation System summarizes the results of the aging management review for the Reactor Building Ventilation System.

3.3.2.1.24 Reactor Water Cleanup System

Materials

The materials of construction for the Reactor Water Cleanup System components are:

- Carbon and Low Alloy Steel Bolting
- Carbon Steel
- Glass
- Stainless Steel

Environments

The Reactor Water Cleanup System components are exposed to the following environments:

- Air - Indoor
- Treated Water
- Treated Water > 140 F

Aging Effects/Mechanisms Requiring Management

The following aging effects associated with the Reactor Water Cleanup System components require management:

- Cracking/Stress Corrosion Cracking, Thermal and Mechanical Loading
- Cumulative Fatigue Damage/Fatigue
- Loss of Material/General, Pitting, Crevice and Galvanic Corrosion
- Loss of Preload/Thermal Effects, Gasket Creep, and Self-Loosening
- Wall Thinning/Flow Accelerated Corrosion

Aging Management Programs

The following aging management programs manage the aging effects for the Reactor Water Cleanup System components:

- ASME Section XI Inservice Inspection, Subsections IWB, IWC, and IWD (B.2.1.1)
- Bolting Integrity (B.2.1.12)
- BWR Stress Corrosion Cracking (B.2.1.7)

- External Surfaces Monitoring (B.2.1.25)
- Flow-Accelerated Corrosion (B.2.1.11)
- One-Time Inspection (B.2.1.22)
- Small-bore Class 1 Piping Inspection (B.2.2.6)
- TLAA
- Water Chemistry (B.2.1.2)

Table 3.3.2-24, Summary of Aging Management Evaluation – Reactor Water Cleanup System summarizes the results of the aging management review for the Reactor Water Cleanup System.

3.3.2.1.25 Remote Shutdown Panel Room HVAC System

Materials

The materials of construction for the Remote Shutdown Panel Room HVAC System components are:

- Aluminum
- Carbon and Low Alloy Steel Bolting
- Carbon Steel
- Copper Alloy with less than 15% Zinc
- Elastomer
- Galvanized Steel
- Stainless Steel

Environments

The Remote Shutdown Panel Room HVAC System components are exposed to the following environments:

- Air – Indoor
- Air – Outdoor
- Air/Gas – Wetted

Aging Effects/Mechanisms Requiring Management

The following aging effects associated with the Remote Shutdown Panel Room HVAC System components require management:

- Hardening and Loss of Strength/Elastomer Degradation
- Loss of Material/General, Pitting, Crevice, and Microbiological Influenced Corrosion

Aging Management Programs

The following aging management programs manage the aging effects for the Remote Shutdown Panel Room HVAC System components:

- External Surfaces Monitoring (B.2.1.25)
- Inspection of Internal Surfaces in Miscellaneous Piping and Ducting Components (B.2.1.26)
- Periodic Inspection (B.2.2.2)

Table 3.3.2-25, Summary of Aging Management Evaluation – Remote Shutdown Panel Room HVAC System summarizes the results of the aging management review for the Remote Shutdown Panel Room HVAC System.

3.3.2.1.26 Service Water Intake Ventilation System

Materials

The materials of construction for the Service Water Intake Ventilation System components are:

- Aluminum
- Carbon and Low Alloy Steel Bolting
- Carbon Steel
- Elastomer
- Galvanized Steel
- Galvanized Steel Bolting
- Stainless Steel

Environments

The Service Water Intake Ventilation System components are exposed to the following environments:

- Air - Indoor
- Air - Outdoor
- Air/Gas - Wetted

Aging Effects/Mechanisms Requiring Management

The following aging effects associated with the Service Water Intake Ventilation System components require management:

- Hardening and Loss of Strength/Elastomer Degradation
- Loss of Material/General, Pitting, and Crevice Corrosion

Aging Management Programs

The following aging management programs manage the aging effects for the Service Water Intake Ventilation System components:

- External Surfaces Monitoring (B.2.1.25)
- Inspection of Internal Surfaces in Miscellaneous Piping and Ducting Components (B.2.1.26)
- Periodic Inspection (B.2.2.2)

Table 3.3.2-26, Summary of Aging Management Evaluation – Service Water Intake Ventilation System summarizes the results of the aging management review for the Service Water Intake Ventilation System.

3.3.2.1.27 Service Water System

Materials

The materials of construction for the Service Water System components are:

- Aluminum Bronze Bolting with 8% Al or more
- Aluminum Bronze with 8% Al or more
- Carbon and Low Alloy Steel Bolting
- Carbon or Low Alloy Steel with Nickel Alloy Cladding
- Carbon Steel
- Carbon Steel (Epoxy lined)
- Carbon Steel (Concrete lined)
- Copper Alloy with less than 15% Zinc
- Ductile Cast Iron
- Elastomer
- Nickel Alloy Bolting
- Nickel Alloy
- Reinforced Concrete
- Stainless Steel Bolting
- Stainless Steel
- Titanium Alloy

Environments

The Service Water System components are exposed to the following environments:

- Air - Indoor
- Air - Outdoor
- Closed Cycle Cooling Water
- Concrete
- Groundwater/Soil
- Raw Water
- Soil

Aging Effects/Mechanisms Requiring Management

The following aging effects associated with the Service Water System components require management:

- Cracking, Loss of Bond, and Loss of Material (Spalling, Scaling)/Corrosion of Embedded Steel
- Hardening and Loss of Strength/Elastomer Degradation
- Increase in Porosity and Permeability, Cracking, Loss of Material (Spalling, Scaling)/ Aggressive Chemical Attack
- Increase in Porosity and Permeability, Loss of Strength/ Leaching of Calcium Hydroxide
- Loss of Material/ Abrasion; Cavitation
- Loss of Material/General, Pitting, Crevice, Galvanic, and Microbiologically Influenced Corrosion, and Fouling
- Loss of Material/Selective Leaching
- Loss of Preload/Thermal Effects, Gasket Creep, and Self-Loosening
- Reduction of Heat Transfer/Fouling

Aging Management Programs

The following aging management programs manage the aging effects for the Service Water System components:

- Bolting Integrity (B.2.1.12)
- Buried Non-Steel Piping Inspection (B.2.2.4)
- Buried Piping Inspection (B.2.1.24)
- Closed-Cycle Cooling Water System (B.2.1.14)
- External Surfaces Monitoring (B.2.1.25)

- Open-Cycle Cooling Water System (B.2.1.13)
- Selective Leaching of Materials (B.2.1.23)

Table 3.3.2-27, Summary of Aging Management Evaluation – Service Water System summarizes the results of the aging management review for the Service Water System.

3.3.2.1.28 Standby Diesel Generator Area Ventilation Systems

Materials

The materials of construction for the Standby Diesel Generator Area Ventilation System components are:

- Aluminum
- Carbon and Low Alloy Steel Bolting
- Carbon Steel
- Copper Alloy with 15% Zinc or More
- Elastomer
- Galvanized Steel
- Stainless Steel
- Stainless Steel Bolting

Environments

The Standby Diesel Generator Area Ventilation System components are exposed to the following environments:

- Air - Indoor
- Air - Outdoor
- Air/Gas - Wetted

Aging Effects/Mechanisms Requiring Management

The following aging effects associated with the Standby Diesel Generator Area Ventilation System components require management:

- Hardening and Loss of Strength/Elastomer Degradation
- Loss of Material/General, Pitting and Crevice Corrosion

Aging Management Programs

The following aging management programs manage the aging effects for the Standby Diesel Generator Area Ventilation System components:

- External Surfaces Monitoring (B.2.1.25)

- Inspection of Internal Surfaces in Miscellaneous Piping and Ducting Components (B.2.1.26)
- Periodic Inspection (B.2.2.2)

Table 3.3.2-28, Summary of Aging Management Evaluation – Standby Diesel Generator Area Ventilation Systems summarizes the results of the aging management review for the Standby Diesel Generator Area Ventilation Systems.

3.3.2.1.29 Standby Diesel Generators and Auxiliary Systems

Materials

The materials of construction for the Standby Diesel Generators and Auxiliary System components are:

- Aluminum
- Carbon and Low Alloy Steel Bolting
- Carbon Steel
- Copper Alloy Bolting with 15% Zinc or More
- Stainless Steel
- Stainless Steel Bolting

Environments

The Standby Diesel Generators and Auxiliary System components are exposed to the following environments:

- Air - Indoor
- Air - Outdoor
- Air/Gas - Dry
- Air/Gas - Wetted
- Closed Cycle Cooling Water
- Closed Cycle Cooling Water > 140° F
- Diesel Exhaust
- Fuel Oil
- Lubricating Oil
- Treated Water

Aging Effects/Mechanisms Requiring Management

The following aging effects associated with the Standby Diesel Generators and Auxiliary System components require management:

- Cracking/Stress Corrosion Cracking
- Loss of Preload/Thermal Effects, Gasket Creep, and Self-Loosening
- Loss of Material/General, Pitting, Crevice, Galvanic, and Microbiologically Influenced Corrosion, and Fouling

Aging Management Programs

The following aging management programs manage the aging effects for the Standby Diesel Generators and Auxiliary System components require management:

- Bolting Integrity (B.2.1.12)
- Closed-Cycle Cooling Water System (B.2.1.14)
- External Surfaces Monitoring (B.2.1.25)
- Fuel Oil Chemistry (B.2.1.20)
- Inspection of Internal Surfaces in Miscellaneous Piping and Ducting Components (B.2.1.26)
- Lubricating Oil Analysis (B.2.1.27)
- One-Time Inspection (B.2.1.22)
- Periodic Inspection (B.2.2.2)
- Water Chemistry (B.2.1.2)

Table 3.3.2-29, Summary of Aging Management Evaluation – Standby Diesel Generators and Auxiliary Systems summarizes the results of the aging management review for the Standby Diesel Generators and Auxiliary Systems.

3.3.2.1.30 Standby Liquid Control System

Materials

The materials of construction for the Standby Liquid Control System components are:

- Carbon and Low Alloy Steel Bolting
- Carbon Steel
- Stainless Steel

Environments

The Standby Liquid Control System components are exposed to the following environments:

- Air - Indoor
- Sodium Pentaborate
- Treated Water
- Treated Water > 140° F

Aging Effects/'Mechanisms Requiring Management

The following aging effects associated with the Standby Liquid Control System components require management:

- Cracking/Stress Corrosion Cracking, Thermal and Mechanical Loading
- Loss of Material/General, Pitting and Crevice Corrosion
- Loss of Preload/Thermal Effects, Gasket Creep, and Self-Loosening

Aging Management Programs

The following aging management programs manage the aging effects for the Standby Liquid Control System components:

- ASME Section XI Inservice Inspection, Subsections IWB, IWC, and IWD (B.2.1.1)
- Bolting Integrity (B.2.1.12)
- External Surfaces Monitoring (B.2.1.25)
- One-Time Inspection (B.2.1.22)
- Small-Bore Class 1 Piping Inspection (B.2.2.6)
- Water Chemistry (B.2.1.2)

Table 3.3.2-30, Summary of Aging Management Evaluation – Standby Liquid Control System summarizes the results of the aging management review for the Standby Liquid Control System.

3.3.2.1.31 Torus Water Cleanup System

Materials

The materials of construction for the Torus Water Cleanup System components are:

- Carbon and Low Alloy Steel Bolting
- Carbon Steel
- Stainless Steel

Environments

The Torus Water Cleanup System components are exposed to the following environments:

- Air – Indoor
- Air/Gas - Wetted
- Treated Water

Aging Effects/Mechanisms Requiring Management

The following aging effects associated with the Torus Water Cleanup System components require management:

- Loss of Material/General, Pitting, Crevice and Galvanic Corrosion
- Loss of Preload/Thermal Effects, Gasket Creep, and Crevice Corrosion

Aging Management Programs

The following aging management programs manage the aging effects for the Torus Water Cleanup System components:

- Bolting Integrity (B.2.1.12)
- External Surfaces Monitoring (B.2.1.25)
- One-Time Inspection (B.2.1.22)
- Periodic Inspection (B.2.2.2)
- Water Chemistry (B.2.1.2)

Table 3.3.2-31, Summary of Aging Management Evaluation – Torus Water Cleanup System summarizes the results of the aging management review for the Torus Water Cleanup System.

3.3.2.1.32 Traversing Incore Probe System

Materials

The materials of construction for the Traversing Incore Probe System components are:

- Carbon and Low Alloy Steel Bolting
- Carbon Steel
- Stainless Steel

Environments

The Traversing Incore Probe System components are exposed to the following environments:

- Air - Indoor

- Air/Gas - Dry

Aging Effects/Mechanisms Requiring Management

The following aging effects associated with the Traversing Incore Probe System components require management:

- Loss of Material/General, Pitting and Crevice Corrosion
- Loss of Preload/Thermal Effects, Gasket Creep, and Self-Loosening

Aging Management Programs

The following aging management programs manage the aging effects for the Traversing Incore Probe System components:

- Bolting Integrity (B.2.1.12)
- External Surfaces Monitoring (B.2.1.25)

Table 3.3.2-32, Summary of Aging Management Evaluation – Traversing Incore Probe System summarizes the results of the aging management review for the Traversing Incore Probe System.

3.3.2.2 AMR Results for Which Further Evaluation is Recommended by the GALL Report

NUREG-1801 provides the basis for identifying those programs that warrant further evaluation by the reviewer in the license renewal application. For the Auxiliary Systems, those programs are addressed in the following subsections.

3.3.2.2.1 Cumulative Fatigue Damage

Fatigue is a TLAA as defined in 10 CFR 54.3. TLAAs are required to be evaluated in accordance with 10 CFR 54.21(c). The evaluation of metal fatigue as a TLAA for the High Pressure Coolant Injection (HPCI) System, Main Steam System, Reactor Core Isolation Cooling (RCIC) System, and Reactor Water Cleanup System is discussed in Section 4.3. The evaluation of crane load cycles as a TLAA for the Cranes and Hoists is discussed in Section 4.7.

3.3.2.2.2 Reduction of Heat Transfer due to Fouling

Reduction of heat transfer due to fouling could occur for stainless steel heat exchanger tubes exposed to treated water. The existing program relies on control of water chemistry to manage reduction of heat transfer due to fouling. However, control of water chemistry may have been inadequate. Therefore, the GALL Report recommends that the effectiveness of the water chemistry control program should be verified to ensure that reduction of heat transfer due to fouling is not occurring. A one-time inspection is an acceptable method to ensure that reduction of heat transfer is not occurring and that the component's intended function will be maintained during the period of extended operation.

Hope Creek will implement a One-Time Inspection program, B.2.1.22, to verify the effectiveness of the Water Chemistry program, B.2.1.2, to manage the reduction of heat transfer due to fouling in stainless steel heat exchanger components exposed to treated water. The Water Chemistry program and One-Time Inspection program manage reduction of heat transfer for the Fuel Pool Cooling Heat Exchanger stainless steel plates, Residual Heat Removal heat exchanger stainless steel tubes and Residual Heat Removal pump seal heat exchanger stainless steel tubes in a treated water environment. These heat exchanger components have been evaluated with the Closed Cycle Cooling Water system, which provides the cooling water to these heat exchangers. The Water Chemistry and One-Time Inspection programs are described in Appendix B.

3.3.2.2.3 Cracking due to Stress Corrosion Cracking (SCC)

1. *Cracking due to SCC could occur in the stainless steel piping, piping components, and piping elements of the BWR Standby Liquid Control system that are exposed to sodium pentaborate solution greater than 60°C (>140°F). The existing aging management program relies on monitoring and control of water chemistry to manage the aging effects of cracking due to SCC. However, high concentrations of impurities at crevices and locations of stagnant flow conditions could cause SCC. Therefore, the GALL Report recommends that the effectiveness of the water chemistry control program should be verified to ensure that SCC is not occurring. A one-time inspection of select components at susceptible locations is an acceptable method to ensure that SCC is not occurring and that the component's intended function will be maintained during the period of extended operation.*

   Item Number 3.3.1-4 is not applicable to Hope Creek. The stainless steel piping, piping components, and piping elements exposed to sodium pentaborate solution are maintained at a temperature less than 140° F at Hope Creek.

2. *Cracking due to SCC could occur in stainless steel and stainless clad steel heat exchanger components exposed to treated water greater than 60°C (>140°F). The GALL Report recommends further evaluation of a plant-specific aging management program to ensure that these aging effects are adequately managed. Acceptance criteria are described in Branch Technical Position RLSB-1.*

   Hope Creek will implement the One-Time Inspection program, B.2.1.22, to verify the effectiveness of the Water Chemistry program, B.2.1.2, to manage cracking due to stress corrosion cracking of the stainless steel heat exchanger components exposed to treated water >60°C (>140°F) in the Reactor Water Cleanup System. The Water Chemistry program activities provide for monitoring and controlling of water chemistry in accordance with EPRI BWR Vessel and Internals Project BWR Water Chemistry Guidelines. The Water Chemistry program activities prevent or mitigate cracking due to stress corrosion cracking of the stainless steel heat

exchanger components exposed to treated water >60°C (>140°F) to ensure there is no loss of component intended function.

The One-Time Inspection program and Water Chemistry program are described in Appendix B.

3. *Cracking due to SCC could occur in stainless steel diesel engine exhaust piping, piping components, and piping elements exposed to diesel exhaust. The GALL Report recommends further evaluation of a plant-specific aging management program to ensure that these aging effects are adequately managed. Acceptance criteria are described in Branch Technical Position RLSB-1.*

   Hope Creek will implement a Periodic Inspection program, B.2.2.2, to manage cracking due to stress corrosion cracking in stainless steel expansion joints exposed to diesel exhaust for the Standby Diesel Generators and Auxiliary Systems. The Periodic Inspection program is used to manage the aging effects of components that are not covered by other aging management programs, including internal surfaces of stainless steel components not covered by the Inspection of Internal Surfaces in Miscellaneous Piping and Ducting Components (B.2.1.26) program. The Periodic Inspection program includes focused visual inspections to assure that existing environmental conditions are not causing material degradation that could result in a loss of component intended functions. The Periodic Inspection program is described in Appendix B.

3.3.2.2.4 Cracking due to Stress Corrosion Cracking and Cyclic Loading

1. *Cracking due to SCC and cyclic loading could occur in stainless steel PWR non-regenerative heat exchanger components exposed to treated borated water greater than 60°C (>140°F) in the chemical and volume control system. The existing aging management program on monitoring and control of primary water chemistry in PWRs to manage the aging effects of cracking due to SCC. However, control of water chemistry does not preclude cracking due to SCC and cyclic loading. Therefore, the effectiveness of the water chemistry control program should be verified to ensure that cracking is not occurring. The GALL Report recommends that a plant-specific aging management program be evaluated to verify the absence of cracking due to SCC and cyclic loading to ensure that these aging effects are managed adequately. An acceptable verification program is to include temperature and radioactivity monitoring of the shell side water, and eddy current testing of tubes.*

   Item Number 3.3.1-7 is not applicable to Hope Creek. This item is applicable to PWRs only.

2. *Cracking due to SCC and cyclic loading could occur in stainless steel PWR regenerative heat exchanger components exposed to treated borated water greater than 60°C (>140°F). The existing aging management program relies on monitoring and control of primary water chemistry in PWRs to manage the aging effects of cracking due to SCC. However, control of*

water chemistry does not preclude cracking due to SCC and cyclic loading. Therefore, the effectiveness of the water chemistry control program should be verified to ensure that cracking is not occurring. The GALL Report recommends that a plant-specific aging management program be evaluated to verify the absence of cracking due to SCC and cyclic loading to ensure that these aging effects are managed adequately. Acceptance criteria are described in Branch Technical Position RLSB-1

Item Number 3.3.1-8 is not applicable to Hope Creek. This item is applicable to PWRs only.

3. *Cracking due to SCC and cyclic loading could occur for the stainless steel pump casing for the PWR high-pressure pumps in the chemical and volume control system. The existing aging management program relies on monitoring and control of primary water chemistry in PWRs to manage the aging effects of cracking due to SCC. However, control of water chemistry does not preclude cracking due to SCC and cyclic loading. Therefore, the effectiveness of the water chemistry control program should be verified to ensure that cracking is not occurring. The GALL Report recommends that a plant-specific aging management program be evaluated to verify the absence of cracking due to SCC and cyclic loading to ensure that these aging effects are managed adequately. Acceptance criteria are described in Branch Technical Position RLSB-1*

   Item Number 3.3.1-9 is not applicable to Hope Creek. This item is applicable to PWRs only.

4. Item Number 3.3.1-10 is not applicable to Hope Creek. There is no high strength bolting in the Auxiliary Systems.

3.3.2.2.5 Hardening and Loss of Strength due to Elastomer Degradation

1. *Hardening and loss of strength due to elastomer degradation could occur in elastomer seals and components of heating and ventilation systems exposed to air – indoor uncontrolled (internal/external). The GALL Report recommends further evaluation of a plant-specific aging management program to ensure that these aging effects are adequately managed. Acceptance criteria are described in Branch Technical Position RLSB-1*

   Hope Creek will implement the Periodic Inspection program, B.2.2.2, to manage hardening and loss of strength due to elastomer degradation of the elastomer door seals and flexible connections exposed to indoor air or wetted air/gas for the Control Room and Control Area HVAC Systems, Filtration, Recirculation, and Ventilation System, Reactor Building Ventilation System, Remote Shutdown Panel Room HVAC System, Service Water Intake Ventilation System, and Standby Diesel Generator Area Ventilation Systems. The Periodic Inspection program is used to manage the aging effects of components that are not covered by other aging management programs, including external surfaces of non-steel components not covered by the External Surfaces Monitoring (B.2.1.25) program and internal surfaces of non-steel components not covered by the

Inspection of Internal Surfaces in Miscellaneous Piping and Ducting Components (B.2.1.26) program. The Periodic Inspection program includes visual inspections and physical manipulation of elastomer components to assure that existing environmental conditions are not causing material degradation that could result in a loss of component intended functions. The Periodic Inspection program is described in Appendix B.

Hope Creek will also implement the Structures Monitoring Program, B.2.1.32, to manage hardening and loss of strength due to elastomer degradation of the compressible joint seals in the Reactor Building exposed to indoor air. The Structures Monitoring Program includes visual inspections of elastomer components to assure that existing environmental conditions are not causing material degradation that could result in a loss of component intended functions. The Structures Monitoring program is described in Appendix B.

2. *Hardening loss of strength due to elastomer degradation could occur in elastomer linings of the filters, valves, and ion exchangers in spent fuel pool cooling and cleanup systems (BWR and PWR) exposed to treated water or to treated borated water. The GALL Report recommends that a plant-specific aging management program be evaluated to determine and assesses the qualified life of the linings in the environment to ensure that these aging effects are adequately managed. Acceptance criteria are described in Branch Technical Position RLSB-1.*

   Hope Creek will implement the Structures Monitoring Program, B.2.1.32, to manage hardening and loss of strength due to elastomer degradation of the compressible joint seals in the Reactor Building exposed to treated water. The Structures Monitoring Program includes visual inspections of elastomer components to assure that existing environmental conditions are not causing material degradation that could result in a loss of component intended functions. The Structures Monitoring program is described in Appendix B.

3.3.2.2.6 Reduction of Neutron-Absorbing Capacity and Loss of Material due to General Corrosion

Reduction of neutron-absorbing capacity and loss of material due to general corrosion could occur in the neutron-absorbing sheets of BWR and PWR spent fuel storage racks exposed to treated water or to treated borated water. The GALL Report recommends further evaluation of a plant-specific aging management program to ensure that these aging effects are adequately managed. Acceptance criteria are described in Branch Technical Position RLSB-1.

Hope Creek will implement the Boral Monitoring Program, B.2.2.5, to manage reduction of neutron-absorbing capacity and loss of material due to general corrosion of the irradiated fuel storage racks exposed to treated water. The Boral Monitoring Program monitors the Boral test coupon inspection or testing

results at other Boiling Water Reactor (BWR) sites. If these results indicate a problem with Boral neutron absorbing material potentially affecting its intended function (i. e., absorb neutrons), Hope Creek will initiate inspection or testing of its Boral test coupons. The Boral Monitoring Program is described in Appendix B.

Hope Creek will also implement a Water Chemistry program, B.2.1.2, to manage reduction of neutron-absorbing capacity and loss of material due to general corrosion of the boral, boron steel spent fuel storage racks neutron-absorbing sheets exposed to treated water in the fuel handling and fuel storage system. The Water Chemistry program activities provide for monitoring and controlling of water chemistry in accordance with EPRI BWR Vessel and Internals Project BWR Water Chemistry Guidelines. The Water Chemistry program activities prevent or mitigate loss of material due to general corrosion to ensure there is no loss of component intended function. The Water Chemistry program is described in Appendix B.

3.3.2.2.7 Loss of Material due to General, Pitting, and Crevice Corrosion

1. *Loss of material due to general, pitting, and crevice corrosion could occur in steel piping, piping components, and piping elements, including the tubing, valves, and tanks in the reactor coolant pump oil collection system, exposed to lubricating oil (as part of the fire protection system). The existing aging management program relies on the periodic sampling and analysis of lubricating oil to maintain contaminants within acceptable limits, thereby preserving an environment that is not conducive to corrosion. However, control of lube oil contaminants may not always have been adequate to preclude corrosion. Therefore, the effectiveness of lubricating oil control should be verified to ensure that corrosion is not occurring. The GALL Report recommends further evaluation of programs to manage corrosion to verify the effectiveness of the lubricating oil program. A one-time inspection of selected components at susceptible locations is an acceptable method to ensure that corrosion is not occurring and that the component's intended function will be maintained during the period of extended operation.*

   In addition, corrosion may occur at locations in the reactor coolant pump oil collection tank where water from wash downs may accumulate. Therefore, the effectiveness of the program should be verified to ensure that corrosion is not occurring. The GALL Report recommends further evaluation of programs to manage loss of material due to general, pitting, and crevice corrosion, to include determining the thickness of the lower portion of the tank. A one-time inspection is an acceptable method to ensure that corrosion is not occurring and that the component's intended function will be maintained during the period of extended operation.

   Item Numbers 3.3.1-15 and 3.3.1-16 are not applicable to Hope Creek. Hope Creek does not have a reactor coolant pump oil collection system or a reactor coolant pump oil collection system tank.

Hope Creek will implement a One-Time Inspection program, B.2.1.22, to verify the effectiveness of the Lubricating Oil Analysis program, B.2.1.27, to manage loss of material due to general, pitting and crevice corrosion of the steel piping, piping components, and piping elements, heat exchanger components and tanks exposed to lubricating oil in the Control Rod Drive System and Standby Diesel Generators and Auxiliary Systems. The Lubricating Oil Analysis and One-Time Inspection programs are described in Appendix B.

2. *Loss of material due to general, pitting, and crevice corrosion could occur in steel piping, piping components, and piping elements in the BWR reactor water cleanup and shutdown cooling systems exposed to treated water. The existing aging management program relies on monitoring and control of reactor water chemistry to manage the aging effects of loss of material from general, pitting and crevice corrosion. However, high concentrations of impurities at crevices and locations of stagnant flow conditions could cause general, pitting, or crevice corrosion. Therefore, the effectiveness of the chemistry control program should be verified to ensure that corrosion is not occurring. The GALL Report recommends further evaluation of programs to manage loss of material from general, pitting, and crevice corrosion to verify the effectiveness of the water chemistry program. A one-time inspection of select components at susceptible locations is an acceptable method to ensure that corrosion is not occurring and that the component's intended function will be maintained during the period of extended operation.*

   Hope Creek will implement a One-Time Inspection program, B.2.1.22, to verify the effectiveness of the Water Chemistry program, B.2.1.2, to manage loss of material due to general, pitting and crevice corrosion of the steel piping, piping components, and piping elements, heat exchanger components and tanks exposed to treated water for the Control Area Chilled Water System, Control Rod Drive System, Fuel Handling and Storage System, Fuel Pool Cooling and Cleanup System, Primary Containment, Reactor Water Cleanup System, Standby Diesel Generators and Auxiliary Systems, Standby Liquid Control System, and Torus Water Cleanup System. The Water Chemistry and One-Time Inspection programs are described in Appendix B.

3. *Loss of material due to general (steel only) pitting and crevice corrosion could occur for steel and stainless steel diesel exhaust piping, piping components, and piping elements exposed to diesel exhaust. The GALL Report recommends further evaluation of a plant-specific aging management program to ensure that these aging effects are adequately managed. Acceptance criteria are described in Branch Technical Position RLSB-1.*

   Hope Creek will implement the Periodic Inspection program, B.2.2.2, to manage loss of material due to pitting and crevice corrosion of the stainless steel exhaust system expansion joints exposed to diesel exhaust for the Standby Diesel Generators and Auxiliary Systems. The Periodic Inspection program is used to manage the aging effects of components that are not

covered by other aging management programs, including internal surfaces of stainless steel components not covered by the Inspection of Internal Surfaces in Miscellaneous Piping and Ducting Components (B.2.1.26) program. The Periodic Inspection program includes visual inspections to assure that existing environmental conditions are not causing material degradation that could result in a loss of component intended functions. The Periodic Inspection program is described in Appendix B.

Hope Creek will implement the Inspection of Internal Surfaces in Miscellaneous Piping and Ducting Components program, B.2.1.26, to manage loss of material due to general, pitting and crevice corrosion of the steel exhaust system piping and silencer/muffler exposed to diesel exhaust for the Standby Diesel Generators and Auxiliary Systems. The Inspection of Internal Surfaces in Miscellaneous Piping and Ducting Components (B.2.1.26) program consists of inspections of steel components that are not covered by other aging management programs. These inspections are performed during the periodic system and component surveillances or during the performance of maintenance activities when the surfaces are made accessible for visual inspection. These inspections assure that existing environmental conditions are not causing material degradation that could result in a loss of component intended functions. The Inspection of Internal Surfaces in Miscellaneous Piping and Ducting Components program is described in Appendix B.

3.3.2.2.8 Loss of Material due to General, Pitting, Crevice, and Microbiologically-Influenced Corrosion (MIC)

Loss of material due to general, pitting, crevice corrosion, and microbiologically-influenced corrosion (MIC) could occur for steel (with or without coating or wrapping) piping, piping components, and piping elements buried in soil. The buried piping and tanks inspection program relies on industry practice, frequency of pipe excavation, and operating experience to manage the effects of loss of material from general, pitting, and crevice corrosion and MIC. The effectiveness of the buried piping and tanks inspection program should be verified to evaluate an applicant's inspection frequency and operating experience with buried components, ensuring that loss of material is not occurring.

Hope Creek will implement the Buried Piping Inspection, B.2.1.24, to manage loss of material due to general, pitting, crevice, and microbiologically influenced corrosion of the external surfaces of steel (including epoxy lined), galvanized steel, gray cast iron, and ductile cast Iron piping and fittings, fire hydrants, and valve bodies exposed to soil in the Fire Protection System and Service Water System. The Buried Piping Inspection aging management program manages buried steel piping and components for loss of material through the use of coatings and wrappings, and periodic inspections. The program relies on preventive measures such as coating and wrapping to mitigate corrosion and periodic inspection of external surfaces to identify coating degradation, if coated, or base metal corrosion, if uncoated. These inspections assure that existing environmental conditions are not causing material degradation that

could result in a loss of component intended functions. The Buried Piping Inspection program is described in Appendix B.

3.3.2.2.9 Loss of Material due to General, Pitting, Crevice, Microbiologically-Influenced Corrosion and Fouling

1. *Loss of material due to general, pitting, crevice, MIC, and fouling could occur for steel piping, piping components, piping elements, and tanks exposed to fuel oil. The existing aging management program relies on the fuel oil chemistry program for monitoring and control of fuel oil contamination to manage loss of material due to corrosion or fouling. Corrosion or fouling may occur at locations where contaminants accumulate. The effectiveness of the fuel oil chemistry control should be verified to ensure that corrosion is not occurring. The GALL Report recommends further evaluation of programs to manage loss of material due to general, pitting, crevice, MIC, and fouling to verify the effectiveness of the fuel oil chemistry program. A one-time inspection of selected components at susceptible locations is an acceptable method to ensure that corrosion is not occurring and that the component's intended function will be maintained during the period of extended operation.*

   Hope Creek will implement a One-Time Inspection program, B.2.1.22, to verify the effectiveness of the Fuel Oil Chemistry program, B.2.1.20, to manage loss of material due to general, pitting, crevice, and microbiologically influenced corrosion, and fouling of the steel piping, piping components, and piping elements, and tanks exposed to fuel oil for the Fire Protection System and Standby Diesel Generators and Auxiliary Systems. The Fuel Oil Chemistry and One-Time Inspection programs are described in Appendix B.

2. *Loss of material due to general, pitting, crevice, MIC, and fouling could occur for steel heat exchanger components exposed to lubricating oil. The existing aging management program relies on the periodic sampling and analysis of lubricating oil to maintain contaminants within acceptable limits, thereby preserving an environment that is not conducive to corrosion. However, control of lube oil contaminants may not always have been adequate to preclude corrosion. Therefore, the effectiveness of lubricating oil control should be verified to ensure that corrosion is not occurring. The GALL Report recommends further evaluation of programs to manage corrosion to verify the effectiveness of the lube oil program. A one-time inspection of selected components at susceptible locations is an acceptable method to ensure that corrosion is not occurring and that the component's intended function will be maintained during the period of extended operation.*

   Hope Creek will implement a One-Time Inspection program, B.2.1.22, to verify the effectiveness of the Lubricating Oil Analysis program, B.2.1.27, to manage loss of material due to general, pitting and crevice corrosion of steel heat exchanger components exposed to lubricating oil for the Closed Cycle Cooling Water System. The Lubricating Oil Analysis program and

One-Time Inspection program manage loss of material on the standby diesel generator steel lube oil heat exchanger components in a lubricating oil environment. Loss of material due to microbiologically influenced corrosion is not applicable for stainless steel in a Lubricating Oil environment. Industry and plant operating experience indicates that the potential for significant degradation of lubricating oil systems due to microbiologically influenced corrosion is minimal. Lubricating oil systems are maintained to high cleanliness standards by design, lubricating oil formulations include corrosion inhibitors, and the potential for water and contaminant intrusion is low compared to fuel oil systems, where the bulk storage, delivery and transport of the fuel oil increases the likelihood of moisture and microorganism contamination. These heat exchanger components have been evaluated with the Closed Cycle Cooling Water system, which provides the cooling water to these heat exchangers. The Lubricating Oil Analysis program and One-Time Inspection program also manage reduction of heat transfer due to fouling of these heat exchanger components (see Table 3.2.1 Item Number 3.2.1-9). The Lubricating Oil Analysis and One-Time Inspection programs are described in Appendix B.

3.3.2.2.10 Loss of Material due to Pitting and Crevice Corrosion

1. *Loss of material due to pitting and crevice corrosion could occur in BWR and PWR steel piping with elastomer lining or stainless steel cladding that are exposed to treated water and treated borated water if the cladding or lining is degraded. The existing aging management program relies on monitoring and control of reactor water chemistry to manage the aging effects of loss of material from pitting and crevice corrosion. However, high concentrations of impurities at crevices and locations of stagnant flow conditions could cause pitting, or crevice corrosion. Therefore, the effectiveness of the chemistry control program should be verified to ensure that corrosion is not occurring. The GALL Report recommends further evaluation of programs to manage loss of material from pitting and crevice corrosion to verify the effectiveness of the water chemistry program. A one-time inspection of select components at susceptible locations is an acceptable method to ensure that corrosion is not occurring and that the component's intended function will be maintained during the period of extended operation.*

   Item Number 3.3.1-22 is not applicable to Hope Creek. There is no steel piping with elastomer lining or steel piping with stainless steel cladding exposed to treated water in the auxiliary systems that are in the scope of license renewal at Hope Creek.

2. *Loss of material due to pitting and crevice corrosion could occur for stainless steel and aluminum piping, piping components, piping elements, and for stainless steel and steel with stainless steel cladding heat exchanger components exposed to treated water. The existing aging management program relies on monitoring and control of reactor water chemistry to manage the aging effects of loss of material from pitting and crevice corrosion. However, high concentrations of impurities at crevices*

and locations of stagnant flow conditions could cause pitting, or crevice corrosion. Therefore, the effectiveness of the chemistry control program should be verified to ensure that corrosion is not occurring. The GALL Report recommends further evaluation of programs to manage loss of material from pitting and crevice corrosion to verify the effectiveness of the water chemistry program. A one-time inspection of select components at susceptible locations is an acceptable method to ensure that corrosion is not occurring and that the component's intended function will be maintained during the period of extended operation.

Hope Creek will implement a One-Time Inspection program, B.2.1.22, to verify the effectiveness of the Water Chemistry program, B.2.1.2, to manage loss of material due to pitting and crevice corrosion of stainless steel heat exchanger components exposed to treated water in the Hydrogen Water Chemistry System and Reactor Water Cleanup System.

The One-Time Inspection program is also used to verify the effectiveness of the Water Chemistry program to manage loss of material due to pitting and crevice corrosion on stainless steel fuel pool cooling heat exchanger components, residual heat removal heat exchanger components and residual heat removal pump seal heat exchanger components exposed to treated water. These heat exchanger components have been evaluated with the Closed Cycle Cooling Water system, which provides the cooling water to these heat exchangers.

The One-Time Inspection program is also used to verify the effectiveness of the Water Chemistry program to manage loss of material due to pitting and crevice corrosion of the stainless steel piping, piping components, and piping elements and tanks exposed to treated water for the Control Area Chilled Water System, Control Rod Drive System, Fuel Pool Cooling and Cleanup System, Hydrogen Water Chemistry System, Makeup Demineralizer System, Process and Post-Accident Sampling System, Reactor Water Cleanup System, Standby Diesel Generators and Auxiliary Systems, Standby Liquid Control System, Torus Water Cleanup System and Primary Containment.

The One-Time Inspection program is also used to verify the effectiveness of the Water Chemistry program to manage loss of material due to pitting and crevice corrosion of the stainless steel skimmer surge tank liner and screen and miscellaneous aluminum structural components exposed to treated water in the Fuel Handling and Storage System and Reactor Building.

The Water Chemistry and One-Time Inspection programs are described in Appendix B.

3. *Loss of material due to pitting and crevice corrosion could occur for copper alloy HVAC piping, piping components, and piping elements exposed to condensation (external). The GALL Report recommends further evaluation of a plant-specific aging management program to ensure that these aging effects are adequately managed. Acceptance criteria are described in Branch Technical Position RLSB-1.*

Hope Creek will implement a Periodic Inspection program, B.2.2.2, to manage loss of material due to pitting and crevice corrosion of the copper alloy HVAC piping, piping components and piping elements exposed to wetted air/gas in the Control Room and Control Area HVAC Systems, Filtration, Recirculation, and Ventilation System, Remote Shutdown Panel Room HVAC System and Standby Diesel Generator Area Ventilation System. The wetted air/gas environment assumed for these components includes the potential for wetting due to condensation. The Periodic Inspection program is used to manage the aging effects of components that are not covered by other aging management programs, including external surfaces of non-steel components not covered by the External Surfaces Monitoring (B.2.1.25) program and internal surfaces of non-steel components not covered by the Inspection of Internal Surfaces in Miscellaneous Piping and Ducting Components (B.2.1.26) program. The Periodic Inspection program includes visual inspections to assure that existing environmental conditions are not causing material degradation that could result in a loss of component intended functions.

Hope Creek will implement a Periodic Inspection program, B.2.2.2, to manage loss of material due to pitting and crevice corrosion of the copper alloy HVAC heat exchanger components exposed to wetted air/gas. These HVAC heat exchanger components have been evaluated with the Chilled Water System, Closed Cycle Cooling Water System or Control Area Chilled Water System, which are the systems that provide the cooling water to these heat exchangers. The wetted air/gas environment assumed for these heat exchanger tubes includes the potential for wetting due to condensation. The Periodic Inspection program includes visual inspections of these heat exchanger tube surfaces to assure that existing environmental conditions are not causing material degradation that could result in a loss of component intended functions. The Periodic Inspection program is described in Appendix B.

4. *Loss of material due to pitting and crevice corrosion could occur for copper alloy piping, piping components, and piping elements exposed to lubricating oil. The existing aging management program relies on the periodic sampling and analysis of lubricating oil to maintain contaminants within acceptable limits, thereby preserving an environment that is not conducive to corrosion. However, control of lube oil contaminants may not always have been adequate to preclude corrosion. Therefore, the effectiveness of lubricating oil control should be verified to ensure that corrosion is not occurring. The GALL Report recommends further evaluation of programs to manage corrosion to verify the effectiveness of the lubricating oil program. A one-time inspection of selected components at susceptible locations is an acceptable method to ensure that corrosion is not occurring and that the component's intended function will be maintained during the period of extended operation.*

   Hope Creek will implement a One-Time Inspection program, B.2.1.22, to verify the effectiveness of the Lubricating Oil Analysis program, B.2.1.27, to manage loss of material due to pitting and crevice corrosion of the copper alloy heat exchanger components exposed to lubricating oil. The

Lubricating Oil Analysis program and One-Time Inspection program manage loss of material on the standby diesel generator lube oil and residual heat removal pump motor bearing copper alloy heat exchanger components in a lubricating oil environment. These heat exchanger components have been evaluated with the Closed Cycle Cooling Water system, which provides the cooling water to these heat exchangers. The Lubricating Oil Analysis and One-Time Inspection programs are described in Appendix B.

5. *Loss of material due to pitting and crevice corrosion could occur for HVAC aluminum piping, piping components, and piping elements and stainless steel ducting and components exposed to condensation. The GALL Report recommends further evaluation of a plant-specific aging management program to ensure that these aging effects are adequately managed. Acceptance criteria are described in Branch Technical Position RLSB-1.*

   Hope Creek will implement a Periodic Inspection program, B.2.2.2 to manage loss of material due to pitting and crevice corrosion of the stainless steel and aluminum HVAC ducting and ducting components, piping, piping components, and piping elements exposed to wetted air/gas in the Control Room and Control Area HVAC Systems, Fire Pump House Ventilation System, Makeup Demineralizer System, Reactor Building Ventilation System, Remote Shutdown Panel Room HVAC System, Service Water Intake Ventilation System, Standby Diesel Generators and Auxiliary Systems and Standby Diesel Generator Area Ventilation Systems. The wetted air/gas environment assumed for these components includes the potential for wetting due to condensation. The Periodic Inspection program is used to manage the aging effects of components that are not covered by other aging management programs, including internal surfaces of non-steel components not covered by the Inspection of Internal Surfaces in Miscellaneous Piping and Ducting Components (B.2.1.26) program. The Periodic Inspection program includes visual inspections to assure that existing environmental conditions are not causing material degradation that could result in a loss of component intended functions. The Periodic Inspection program is described in Appendix B.

6. *Loss of material due to pitting and crevice corrosion could occur for copper alloy fire protection system piping, piping components, and piping elements exposed to internal condensation. The GALL Report recommends further evaluation of a plant-specific aging management program to ensure that these aging effects are adequately managed. Acceptance criteria are described in Branch Technical Position RLSB-1.*

   Hope Creek will implement the Fire Protection program, B.2.1.17, and Fire Water System program, B.2.1.18, to manage loss of material due to pitting and crevice corrosion of the copper alloy fire protection sprinkler heads and restricting orifices exposed to wetted air in the Fire Protection System. The Fire Protection program and Fire Water System program include periodic system and component inspections that include inspection of the sprinkler heads and restricting orifices as part of the fire protection system surveillance activities. In addition, the Fire Water System program includes

50-year sprinkler head inspections using the guidance of NFPA-25. The Fire Protection program and Fire Water System program are described in Appendix B.

7. *Loss of material due to pitting and crevice corrosion could occur for stainless steel piping, piping components, and piping elements exposed to soil. The GALL Report recommends further evaluation of a plant-specific aging management program to ensure that these aging effects are adequately managed. Acceptance criteria are described in Branch Technical Position RLSB-1.*

   Item Number 3.3.1-29 is not applicable for Hope Creek. The AMR methodology for stainless steel piping, piping components, and piping elements exposed to soil predicts microbiologically influenced corrosion in addition to pitting, and crevice corrosion. There are no NUREG-1801 AMR lines available for stainless steel components exposed to soil that include all of these mechanisms.

   The Buried Non-Steel Piping Inspection program, B.2.2.4, will be used to manage loss of material due to pitting, crevice and microbiologically influenced corrosion of the stainless steel piping components and piping elements exposed to soil. The Buried Non-Steel Piping Inspection aging management program manages the buried piping and components that are not included in the Buried Piping Inspection (B.2.1.24) aging management program. The Buried Non-Steel Piping Inspection program manages piping and components that are exposed to an external soil environment for loss of material due to pitting, crevice and microbiologically influenced corrosion. Loss of material will be monitored and identified through visual inspections of the external surfaces of the piping and components. Inspection of buried components identifies coating degradation, if coated, or base metal corrosion, if uncoated. These inspections assure that existing environmental conditions are not causing material degradation that could result in a loss of component intended functions. The Buried Non-Steel Piping Inspection aging management program is described in Appendix B.

8. *Loss of material due to pitting and crevice corrosion could occur for stainless steel piping, piping components, and piping elements of the BWR Standby Liquid Control System that are exposed to sodium pentaborate solution. The existing aging management program relies on monitoring and control of water chemistry to manage the aging effects of loss of material due to pitting and crevice corrosion. However, high concentrations of impurities at crevices and locations of stagnant flow conditions could cause loss of material due to pitting and crevice corrosion. Therefore, the GALL Report recommends that the effectiveness of the water chemistry control program should be verified to ensure this aging is not occurring. A one-time inspection of select components at susceptible locations is an acceptable method to ensure that loss of material due to pitting and crevice corrosion is not occurring and that the component's intended function will be maintained during the period of extended operation.*

Hope Creek will implement a One-Time Inspection program, B.2.1.22, to verify the effectiveness of the Water Chemistry program, B.2.1.2, to manage loss of material due to pitting and crevice corrosion of the stainless steel piping, piping components, and piping elements, and tanks exposed to sodium pentaborate in the Standby Liquid Control System. The Water Chemistry and One-Time Inspection programs are described in Appendix B.

3.3.2.2.11 Loss of Material due to Pitting, Crevice, and Galvanic Corrosion

The GALL Report recommends further evaluation of programs to manage the loss of material due to pitting, crevice, and galvanic corrosion of copper alloy piping, piping components, and piping elements that are exposed to treated water. The reviewer reviews the applicant's proposed program on a case-by-case basis to ensure that an adequate program will be in place for the management of these aging effects.

Hope Creek will implement a One-Time Inspection program, B.2.1.22, to verify the effectiveness of the Water Chemistry program, B.2.1.2, to manage loss of material due to pitting, crevice and galvanic corrosion of the copper alloy valve body and heat exchanger components exposed to treated water in the High Pressure Coolant Injection (HPCI) System and Reactor Core Isolation Cooling (RCIC) System. The Water Chemistry program activities provide for monitoring and controlling of water chemistry in accordance with EPRI BWR Vessel and Internals Project BWR Water Chemistry Guidelines. The Water Chemistry program activities prevent or mitigate loss of material aging effects to ensure there is no loss of component intended function. The Water Chemistry and One-Time Inspection programs are described in Appendix B.

3.3.2.2.12 Loss of Material due to Pitting, Crevice, and Microbiologically-Influenced Corrosion

1. *Loss of material due to pitting, crevice, and MIC could occur in stainless steel, aluminum, and copper alloy piping, piping components, and piping elements exposed to fuel oil. The existing aging management program relies on the fuel oil chemistry program for monitoring and control of fuel oil contamination to manage loss of material due to corrosion. However, corrosion may occur at locations where contaminants accumulate and the effectiveness of fuel oil chemistry control should be verified to ensure that corrosion is not occurring. The GALL Report recommends further evaluation of programs to manage corrosion to verify the effectiveness of the fuel oil chemistry control program. A one-time inspection of selected components at susceptible locations is an acceptable method to ensure that corrosion is not occurring and that the component's intended function will be maintained during the period of extended operation.*

   Hope Creek will implement a One-Time Inspection program, B.2.1.22, to verify the effectiveness of the Fuel Oil Chemistry program, B.2.1.20, to

manage loss of material due to pitting, crevice, and microbiologically influenced corrosion of the stainless steel and copper alloy piping, piping components, and piping elements exposed to fuel oil in the Fire Protection System and Standby Diesel Generators and Auxiliary Systems. The Fuel Oil Chemistry and One-Time Inspection programs are described in Appendix B.

2. *Loss of material due to pitting, crevice, and MIC could occur in stainless steel piping, piping components, and piping elements exposed to lubricating oil. The existing program relies on the periodic sampling and analysis of lubricating oil to maintain contaminants within acceptable limits, thereby preserving an environment that is not conducive to corrosion. However, control of lube oil contaminants may not always have been adequate to preclude corrosion. Therefore, the effectiveness of lubricating oil control should be verified to ensure that corrosion is not occurring. The GALL Report recommends further evaluation of programs to manage corrosion to verify the effectiveness of the lubricating oil program. A one-time inspection of selected components at susceptible locations is an acceptable method to ensure that corrosion is not occurring and that the component's intended function will be maintained during the period of extended operation.*

   Hope Creek will implement a One-Time Inspection program, B.2.1.22, to verify the effectiveness of the Lubricating Oil Analysis program, B.2.1.27, to manage loss of material due to pitting and crevice corrosion of the stainless steel piping, piping components, and piping elements exposed to lubricating oil for the Standby Diesel Generators and Auxiliary Systems. Loss of material due to microbiologically influenced corrosion is not applicable for stainless steel in a Lubricating Oil environment. Industry and plant operating experience indicates that the potential for significant degradation of lubricating oil systems due to microbiologically influenced corrosion is minimal. Lubricating oil systems are maintained to high cleanliness standards by design, lubricating oil formulations include corrosion inhibitors, and the potential for water and contaminant intrusion is low compared to fuel oil systems, where the bulk storage, delivery and transport of the fuel oil increases the likelihood of moisture and microorganism contamination. The One-Time Inspection program and Lubricating Oil Analysis program are described in Appendix B.

3.3.2.2.13 Loss of Material due to Wear

Loss of material due to wear could occur in the elastomer seals and components exposed to air indoor uncontrolled (internal or external). The GALL Report recommends further evaluation to ensure that these aging effects are adequately managed. Acceptance criteria are described in Branch Technical Position RLSB-1.

Item Number 3.3.1-34 is not applicable for Hope Creek. Elastomer components determined to be subject to wear based on plant operating experience are periodically replaced and therefore not subject to aging

management review. Elastomer components that are not periodically replaced are evaluated for Hardening and Loss of Strength due to Elastomer Degradation under Item Number 3.3.1-11 and are included in the plant-specific Periodic Inspection (B.2.2.2) program. Elastomer fire barrier components are evaluated for Increased Hardness, Shrinkage and Loss of Strength due to Weathering under Item Number 3.3.1-61 and are included in the Fire Protection (B.2.1.17) program. The Periodic Inspection program and Fire Protection program are described in Appendix B.

3.3.2.2.14 Loss of Material due to Cladding Breach

Loss of material due to cladding breach could occur for PWR steel charging pump casings with stainless steel cladding exposed to treated borated water. The GALL Report references NRC Information Notice 94-63, Boric Acid Corrosion of Charging Pump Casings Caused by Cladding Cracks, and recommends further evaluation of a plant-specific aging management program to ensure that the aging effect is adequately managed. Acceptance criteria are described in Branch Technical Position RLSB-1.

Item Number 3.3.1-35 is not applicable to Hope Creek. This item number is applicable to PWRs only.

3.3.2.2.15 Quality Assurance for Aging Management of Nonsafety-Related Components

Acceptance criteria are described in Branch Technical Position 1QMB-1. QA provisions applicable to License Renewal are discussed in Section B.1.3.

3.3.2.3 Time-Limited Aging Analysis

The time-limited aging analyses identified below are associated with the Auxiliary Systems components:

- Section 4.3, Metal Fatigue of the Reactor Vessel, Internals, and Reactor Coolant Pressure Boundary Piping and Components
- Section 4.7, Crane Load Cycle Limits

3.3.3 CONCLUSION

The Auxiliary Systems piping, fittings, and components that are subject to aging management review have been identified in accordance with the requirements of 10 CFR 54.4. The aging management programs selected to manage aging effects for the Auxiliary Systems components are identified in the summaries in Section 3.3.2.1 above.

A description of these aging management programs is provided in Appendix B, along with the demonstration that the identified aging effects will be managed for the period of extended operation.

Therefore, based on the conclusions provided in Appendix B, the effects of aging associated with the Auxiliary Systems components will be adequately managed so that there is reasonable assurance that the intended function(s) will be maintained consistent with the current licensing basis during the period of extended operation.

Table 3.3.1 Summary of Aging Management Evaluations for the Auxiliary Systems

Item Number	Component	Aging Effect/Mechanism	Aging Management Programs	Further Evaluation Recommended	Discussion
3.3.1-1	Steel cranes - structural girders exposed to air – indoor uncontrolled (external)	Cumulative fatigue damage	TLAA to be evaluated for structural girders of cranes. See the Standard Review Plan, Section 4.7 for generic guidance for meeting the requirements of 10 CFR 54.21(c)(1).	Yes, TLAA	Fatigue is a TLAA; further evaluation is documented in Subsection 3.3.2.2.1.
3.3.1-2	Steel and stainless steel piping, piping components, piping elements, and heat exchanger components exposed to air – indoor uncontrolled, treated borated water or treated water	Cumulative fatigue damage	TLAA, evaluated in accordance with 10 CFR 54.21(c)	Yes, TLAA	Fatigue is a TLAA; further evaluation is documented in Subsection 3.3.2.2.1.

Table 3.3.1 Summary of Aging Management Evaluations for the Auxiliary Systems

Item Number	Component	Aging Effect/Mechanism	Aging Management Programs	Further Evaluation Recommended	Discussion
3.3.1-3	Stainless steel heat exchanger tubes exposed to treated water	Reduction of heat transfer due to fouling	Water Chemistry and One-Time Inspection	Yes, detection of aging effects is to be evaluated	Consistent with NUREG-1801 with exceptions. The One-Time Inspection program, B.2.1.22, will be used to verify the effectiveness of the Water Chemistry program, B.2.1.2, to manage the reduction of heat transfer due to fouling in stainless steel heat exchanger components exposed to treated water. Exceptions apply to the NUREG-1801 recommendations for the Water Chemistry program implementation. See subsection 3.3.2.2.2.
3.3.1-4	Stainless steel piping, piping components, and piping elements exposed to sodium pentaborate solution >60 C (>140° F)	Cracking due to stress corrosion cracking	Water Chemistry and One-Time Inspection	Yes, detection of aging effects is to be evaluated	Not applicable. See subsection 3.3.2.2.3.1.
3.3.1-5	Stainless steel and stainless clad steel heat exchanger components exposed to treated water >60°C (>140°F)	Cracking due to stress corrosion cracking	A plant specific aging management program is to be evaluated.	Yes, plant specific	The One-Time Inspection program, B.2.1.22, will be used to verify the effectiveness of the Water Chemistry program, B.2.1.2, to manage cracking due to stress corrosion cracking of the stainless steel and stainless clad steel heat

Table 3.3.1 Summary of Aging Management Evaluations for the Auxiliary Systems

Item Number	Component	Aging Effect/Mechanism	Aging Management Programs	Further Evaluation Recommended	Discussion
					exchanger components exposed to treated water >60°C (>140°F). See subsection 3.3.2.2.3.2.
3.3.1-6	Stainless steel diesel engine exhaust piping, piping components, and piping elements exposed to diesel exhaust	Cracking due to stress corrosion cracking	A plant specific aging management program is to be evaluated.	Yes, plant specific	The Periodic Inspection program, B.2.2.2, will be used to manage cracking due to stress corrosion cracking in stainless steel expansion joints exposed to diesel exhaust. See subsection 3.3.2.2.3.3.
3.3.1-7	PWRs only.				
3.3.1-8	PWRs only				
3.3.1-9	PWRs only				
3.3.1-10	High-strength steel closure bolting exposed to air with steam or water leakage.	Cracking due to stress corrosion cracking, cyclic loading	Bolting Integrity The AMP is to be augmented by appropriate inspection to detect cracking if	Yes, if the bolts are not replaced during maintenance	Not Applicable. See subsection 3.3.2.2.4.4.

Table 3.3.1 Summary of Aging Management Evaluations for the Auxiliary Systems

Item Number	Component	Aging Effect/Mechanism	Aging Management Programs	Further Evaluation Recommended	Discussion
			the bolts are not otherwise replaced during maintenance.		
3.3.1-11	Elastomer seals and components exposed to air – indoor uncontrolled (internal/external)	Hardening and loss of strength due to elastomer degradation	A plant specific aging management program is to be evaluated.	Yes, plant specific	The Periodic Inspection program, B.2.2.2, will be used to manage hardening and loss of strength due to elastomer degradation of the elastomer components exposed to indoor air or wetted air/gas. Compressible joint seals in the Reactor Building have been aligned to this item number based on material, environment and aging effect. The Structures Monitoring Program, B.2.1.32, will be used to manage hardening and loss of strength due to elastomer degradation for these seals. See subsection 3.3.2.2.5.1.

Table 3.3.1 Summary of Aging Management Evaluations for the Auxiliary Systems

Item Number	Component	Aging Effect/Mechanism	Aging Management Programs	Further Evaluation Recommended	Discussion
3.3.1-12	Elastomer lining exposed to treated water or treated borated water	Hardening and loss of strength due to elastomer degradation	A plant-specific aging management program is to be evaluated.	Yes, plant specific	Compressible joint seals in the Reactor Building have been aligned to this item number based on material, environment and aging effect. The Structures Monitoring Program, B.2.1.32, will be used to manage hardening and loss of strength due to elastomer degradation for these seals. See subsection 3.3.2.2.5.2.
3.3.1-13	Boral, boron steel spent fuel storage racks neutron-absorbing sheets exposed to treated water or treated borated water	Reduction of neutron-absorbing capacity and loss of material due to general corrosion	A plant specific aging management program is to be evaluated.	Yes, plant specific	Hope Creek will implement the Boral Monitoring Program, B.2.2.5 and Water Chemistry program, B.2.1.2, to manage reduction of neutron-absorbing capacity and loss of material due to general corrosion of the irradiated fuel storage racks exposed to treated water. See subsection 3.3.2.2.6.
3.3.1-14	Steel piping, piping component, and piping elements exposed to lubricating oil	Loss of material due to general, pitting, and crevice corrosion	Lubricating Oil Analysis and One-Time Inspection	Yes, detection of aging effects is to be evaluated	Consistent with NUREG-1801 with exceptions. The One-Time Inspection program, B.2.1.22, will be used to verify the effectiveness of the Lubricating Oil Analysis program, B.2.1.27, to manage loss of material due to general, pitting and crevice

Table 3.3.1 Summary of Aging Management Evaluations for the Auxiliary Systems

Item Number	Component	Aging Effect/Mechanism	Aging Management Programs	Further Evaluation Recommended	Discussion
					corrosion of the steel piping, piping components, and piping elements, heat exchanger components and tanks exposed to lubricating oil. Exceptions apply to the NUREG-1801 recommendations for the Lubricating Oil Analysis program implementation. See subsection 3.3.2.2.7.1.
3.3.1-15	Steel reactor coolant pump oil collection system piping, tubing, and valve bodies exposed to lubricating oil	Loss of material due to general, pitting, and crevice corrosion	Lubricating Oil Analysis and One-Time Inspection	Yes, detection of aging effects is to be evaluated	Not Applicable. See subsection 3.3.2.2.7.1.
3.3.1-16	Steel reactor coolant pump oil collection system tank exposed to lubricating oil	Loss of material due to general, pitting, and crevice corrosion	Lubricating Oil Analysis and One-Time Inspection to evaluate the thickness of the lower portion of the tank	Yes, detection of aging effects is to be evaluated	Not Applicable. See subsection 3.3.2.2.7.1.

Table 3.3.1 Summary of Aging Management Evaluations for the Auxiliary Systems

Item Number	Component	Aging Effect/Mechanism	Aging Management Programs	Further Evaluation Recommended	Discussion
3.3.1-17	Steel piping, piping components, and piping elements exposed to treated water	Loss of material due to general, pitting, and crevice corrosion	Water Chemistry and One-Time Inspection	Yes, detection of aging effects is to be evaluated	Consistent with NUREG-1801 with exceptions. The One-Time Inspection program, B.2.1.22, will be used to verify the effectiveness of the Water Chemistry program, B.2.1.2, to manage loss of material due to general, pitting and crevice corrosion of the steel piping, piping components, and piping elements, heat exchanger components and tanks exposed to treated water. Exceptions apply to the NUREG-1801 recommendations for the Water Chemistry program implementation. See subsection 3.3.2.2.7.2.
3.3.1-18	Stainless steel and steel diesel engine exhaust piping, piping components, and piping elements exposed to diesel exhaust	Loss of material/ general (steel only), pitting and crevice corrosion	A plant specific aging management program is to be evaluated.	Yes, plant specific	Hope Creek will implement the Inspection of Internal Surfaces in Miscellaneous Piping and Ducting Components program, B.2.1.26, to manage loss of material due to general, pitting and crevice corrosion of the steel piping, piping components, and piping elements exposed to diesel exhaust. Hope Creek will implement a Periodic Inspection program, B.2.2.2, to manage loss of material due to pitting and crevice corrosion of the stainless steel expansion

Table 3.3.1 Summary of Aging Management Evaluations for the Auxiliary Systems

Item Number	Component	Aging Effect/Mechanism	Aging Management Programs	Further Evaluation Recommended	Discussion
					joints exposed to diesel exhaust. See subsection 3.3.2.2.7.3.
3.3.1-19	Steel (with or without coating or wrapping) piping, piping components, and piping elements exposed to soil	Loss of material due to general, pitting, crevice, and microbiologically influenced corrosion	Buried Piping and Tanks Surveillance or Buried Piping and Tanks Inspection	No Yes, detection of aging effects and operating experience are to be further evaluated	Consistent with NUREG-1801. The Buried Piping Inspection program, B.2.1.24, will be used to manage loss of material due to general, pitting, crevice, and microbiologically influenced corrosion of the steel (including epoxy lined and galvanized steel) piping, piping components, and piping elements exposed to soil. Hope Creek does not have any buried tanks in the scope of license renewal. See subsection 3.3.2.2.8. Components in the Auxiliary Boiler Building, Auxiliary Building Control/Diesel Generator Area, Auxiliary Building Service/Radwaste Area, Fire Protection System, Fire Water Pump House, Reactor Building, Service Water Intake Structures, Shoreline Protection and Dike, Switchyard, Turbine Building and Yard Structures have been aligned to this item number based on material, environment and aging effect. The Aboveground Steel Tanks program, B.2.1.19, RG 1.127 - Inspection of Water-Control Structures Associated with Nuclear

Table 3.3.1 Summary of Aging Management Evaluations for the Auxiliary Systems

Item Number	Component	Aging Effect/Mechanism	Aging Management Programs	Further Evaluation Recommended	Discussion
					Power Plants program, B.2.1.33, and Structures Monitoring Program, B.2.1.32, will be substituted to manage loss of material due to general, pitting, crevice, and microbiologically influenced corrosion in steel and galvanized steel penetration sleeves, steel piles and steel tank bottom surfaces for these systems and structures.
3.3.1-20	Steel piping, piping components, piping elements, and tanks exposed to fuel oil	Loss of material due to general, pitting, crevice, and microbiologically influenced corrosion, and fouling	Fuel Oil Chemistry and One-Time Inspection	Yes, detection of aging effects is to be evaluated)	Consistent with NUREG-1801 with exceptions. The One-Time Inspection program, B.2.1.22, will be used to verify the effectiveness of the Fuel Oil Chemistry program, B.2.1.20, to manage loss of material due to general, pitting, crevice, and microbiologically influenced corrosion, and fouling of the steel piping, piping components, and piping elements, and tanks exposed to fuel oil. Exceptions apply to the NUREG-1801 recommendations for the Fuel Oil Chemistry program implementation. See subsection 3.3.2.2.9.1.

Table 3.3.1 Summary of Aging Management Evaluations for the Auxiliary Systems

Item Number	Component	Aging Effect/Mechanism	Aging Management Programs	Further Evaluation Recommended	Discussion
3.3.1-21	Steel heat exchanger components exposed to lubricating oil	Loss of material due to general, pitting, crevice, and microbiologically influenced corrosion, and fouling	Lubricating Oil Analysis and One-Time Inspection	Yes, detection of aging effects is to be evaluated	Consistent with NUREG-1801 with exceptions. The One-Time Inspection program, B.2.1.22, will be used to verify the effectiveness of the Lubricating Oil Analysis program, B.2.1.27, to manage loss of material due to general, pitting and crevice corrosion of the steel heat exchanger components exposed to lubricating oil. Loss of material due to microbiologically influenced corrosion and fouling are not predicted for this stainless steel component in a lubricating oil environment, based on industry guidance and plant-specific operating experience. Exceptions apply to the NUREG-1801 recommendations for the Lubricating Oil Analysis program implementation. See subsection 3.3.2.2.9.2.

Table 3.3.1 Summary of Aging Management Evaluations for the Auxiliary Systems

Item Number	Component	Aging Effect/Mechanism	Aging Management Programs	Further Evaluation Recommended	Discussion
3.3.1-22	Steel with elastomer lining or stainless steel cladding piping, piping components, and piping elements exposed to treated water and treated borated water	Loss of material due to pitting and crevice corrosion (only for steel after lining/cladding degradation)	Water Chemistry and One-Time Inspection	Yes, detection of aging effects is to be evaluated	Not Applicable. See subsection 3.3.2.2.10.1.
3.3.1-23	Stainless steel and steel with stainless steel cladding heat exchanger components exposed to treated water	Loss of material due to pitting and crevice corrosion	Water Chemistry and One-Time Inspection	Yes, detection of aging effects is to be evaluated	Consistent with NUREG-1801 with exceptions. The One-Time Inspection program, B.2.1.22, will be used to verify the effectiveness of the Water Chemistry program, B.2.1.2, to manage loss of material due to pitting and crevice corrosion of stainless steel heat exchanger components exposed to treated water. Exceptions apply to the NUREG-1801 recommendations for the Water Chemistry program implementation. See subsection 3.3.2.2.10.2.

Table 3.3.1 Summary of Aging Management Evaluations for the Auxiliary Systems

Item Number	Component	Aging Effect/Mechanism	Aging Management Programs	Further Evaluation Recommended	Discussion
3.3.1-24	Stainless steel and aluminum piping, piping components, and piping elements exposed to treated water	Loss of material due to pitting and crevice corrosion	Water Chemistry and One-Time Inspection	Yes, detection of aging effects is to be evaluated	Consistent with NUREG-1801 with exceptions. The One-Time Inspection program, B.2.1.22, will be used to verify the effectiveness of the Water Chemistry program, B.2.1.2, to manage loss of material due to pitting and crevice corrosion of the stainless steel piping, piping components and piping elements and tanks exposed to treated water. The One-Time Inspection program will also be used to verify the effectiveness of the Water Chemistry program to manage loss of material due to pitting and crevice corrosion of stainless steel structural components submerged in treated water. Exceptions apply to the NUREG-1801 recommendations for the Water Chemistry program implementation. See subsection 3.3.2.2.10.2.

Table 3.3.1 Summary of Aging Management Evaluations for the Auxiliary Systems

Item Number	Component	Aging Effect/Mechanism	Aging Management Programs	Further Evaluation Recommended	Discussion
3.3.1-25	Copper alloy HVAC piping, piping components, piping elements exposed to condensation (external)	Loss of material due to pitting and crevice corrosion	A plant-specific aging management program is to be evaluated.	Yes, plant specific	The Periodic Inspection program, B.2.2.2, will be used to manage loss of material due to pitting and crevice corrosion of the copper alloy HVAC piping, piping components, piping elements and HVAC heat exchanger components exposed to wetted air/gas. See subsection 3.3.2.2.10.3
3.3.1-26	Copper alloy piping, piping components, and piping elements exposed to lubricating oil	Loss of material due to pitting and crevice corrosion	Lubricating Oil Analysis and One-Time Inspection	Yes, detection of aging effects is to be evaluated	Consistent with NUREG-1801 with exceptions. The One-Time Inspection program, B.2.1.22, will be used to verify the effectiveness of the Lubricating Oil Analysis program, B.2.1.27, to manage loss of material due to pitting and crevice corrosion of the copper alloy heat exchanger components exposed to lubricating oil. Exceptions apply to the NUREG-1801 recommendations for the Lubricating Oil Analysis program implementation. See subsection 3.3.2.2.10.4.

Table 3.3.1 Summary of Aging Management Evaluations for the Auxiliary Systems

Item Number	Component	Aging Effect/Mechanism	Aging Management Programs	Further Evaluation Recommended	Discussion
3.3.1-27	Stainless steel HVAC ducting and aluminum HVAC piping, piping components and piping elements exposed to condensation	Loss of material due to pitting and crevice corrosion	A plant-specific aging management program is to be evaluated.	Yes, plant specific	The Periodic Inspection program, B.2.2.2 will be used to manage loss of material due to pitting and crevice corrosion of the stainless steel and aluminum HVAC ducting and ducting components, piping, piping components, and piping elements exposed to wetted air/gas. See subsection 3.3.2.2.10.5.
3.3.1-28	Copper alloy fire protection piping, piping components, and piping elements exposed to condensation (internal)	Loss of material due to pitting and crevice corrosion	A plant-specific aging management program is to be evaluated.	Yes, plant specific	The Fire Protection program, B.2.1.17, and Fire Water System program, B.2.1.18, will be used to manage loss of material due to pitting and crevice corrosion of the copper alloy fire protection sprinkler heads and restricting orifices exposed to wetted air. See subsection 3.3.2.2.10.6.
3.3.1-29	Stainless steel piping, piping components, and piping elements exposed to soil	Loss of material due to pitting and crevice corrosion	A plant-specific aging management program is to be evaluated.	Yes, plant specific	Not Applicable. See subsection 3.3.2.2.10.7.

Table 3.3.1 Summary of Aging Management Evaluations for the Auxiliary Systems

Item Number	Component	Aging Effect/Mechanism	Aging Management Programs	Further Evaluation Recommended	Discussion
3.3.1-30	Stainless steel piping, piping components, and piping elements exposed to sodium pentaborate solution	Loss of material due to pitting and crevice corrosion	Water Chemistry and One-Time Inspection	Yes, detection of aging effects is to be evaluated	Consistent with NUREG-1801 with exceptions. The One-Time Inspection program, B.2.1.22, will be used to verify the effectiveness of the Water Chemistry program, B.2.1.2, to manage loss of material due to pitting and crevice corrosion of the stainless steel piping, piping components, and piping elements, and tanks exposed to sodium pentaborate. Exceptions apply to the NUREG-1801 recommendations for the Water Chemistry program implementation. See subsection 3.3.2.2.10.8.
3.3.1-31	Copper alloy piping, piping components, and piping elements exposed to treated water	Loss of material due to pitting, crevice, and galvanic corrosion	Water Chemistry and One-Time Inspection	Yes, detection of aging effects is to be evaluated	Consistent with NUREG-1801 with exceptions. The One-Time Inspection program, B.2.1.22, will be used to verify the effectiveness of the Water Chemistry program, B.2.1.2, to manage loss of material due to pitting, crevice and galvanic corrosion of the copper alloy valve body and heat exchanger components exposed to treated water. Exceptions apply to the NUREG-1801

Table 3.3.1 Summary of Aging Management Evaluations for the Auxiliary Systems

Item Number	Component	Aging Effect/Mechanism	Aging Management Programs	Further Evaluation Recommended	Discussion
					recommendations for the Water Chemistry program implementation. See subsection 3.3.2.2.11.
3.3.1-32	Stainless steel, aluminum and copper alloy piping, piping components, and piping elements exposed to fuel oil	Loss of material due to pitting, crevice, and microbiologically influenced corrosion	Fuel Oil Chemistry and One-Time Inspection	Yes, detection of aging effects is to be evaluated	Consistent with NUREG-1801 with exceptions. The One-Time Inspection program, B.2.1.22, will be used to verify the effectiveness of the Fuel Oil Chemistry program, B.2.1.20, to manage loss of material due to pitting, crevice, and microbiologically influenced corrosion of the stainless steel and copper alloy piping, piping components, and piping elements exposed to fuel oil. Exceptions apply to the NUREG-1801 recommendations for the Fuel Oil Chemistry program implementation. See subsection 3.3.2.2.12.1.
3.3.1-33	Stainless steel piping, piping components, and piping elements exposed to lubricating oil	Loss of material due to pitting, crevice, and microbiologically influenced corrosion	Lubricating Oil Analysis and One-Time Inspection	Yes, detection of aging effects is to be evaluated	Consistent with NUREG-1801 with exceptions. The One-Time Inspection program, B.2.1.22, will be used to verify the effectiveness of the Lubricating Oil Analysis program, B.2.1.27, to manage loss of material due to pitting and crevice corrosion of the stainless steel piping, piping

Table 3.3.1 Summary of Aging Management Evaluations for the Auxiliary Systems

Item Number	Component	Aging Effect/Mechanism	Aging Management Programs	Further Evaluation Recommended	Discussion
					components, and piping elements exposed to lubricating oil. Loss of material due to microbiologically influenced corrosion is not predicted for these stainless steel components in a lubricating oil environment, based on industry guidance and plant-specific operating experience. Exceptions apply to the NUREG-1801 recommendations for the Lubricating Oil Analysis program implementation. See subsection 3.3.2.2.12.2.
3.3.1-34	Elastomer seals and components exposed to air – indoor uncontrolled (internal or external)	Loss of material due to Wear	A plant specific aging management program is to be evaluated.	Yes, plant specific	Not Applicable. See subsection 3.3.2.2.13.
3.3.1-35	PWR Only				
3.3.1-36	Boraflex spent fuel storage racks neutron-absorbing sheets exposed to treated water	Reduction of neutron absorbing capacity due to boraflex degradation	Boraflex Monitoring	No	Not Applicable. There are no Boraflex spent fuel storage racks neutron-absorbing sheets exposed to treated water for the Auxiliary Systems.

Table 3.3.1 Summary of Aging Management Evaluations for the Auxiliary Systems

Item Number	Component	Aging Effect/Mechanism	Aging Management Programs	Further Evaluation Recommended	Discussion
3.3.1-37	Stainless steel piping, piping components, and piping elements exposed to treated water >60°C (>140°F)	Cracking due to stress corrosion cracking, intergranular stress corrosion cracking	BWR Reactor Water Cleanup System	No	Not Applicable. Hope Creek will not be implementing a BWR Reactor Water Cleanup System program. Hope Creek has met all of the following criteria; satisfactory completion of all actions requested in NRC GL 89-10, no detection of IGSCC in RWCU welds inboard of the second isolation valves (ongoing inspection in accordance with the guidance in NRC GL 88-01), and no detection of IGSCC in RWCU welds outboard of the second isolation valves after inspecting a minimum of 10% of the susceptible piping. All three of the screening criteria as specified in XI.M25 BWR Reactor Water Cleanup System have been satisfied at Hope Creek. Stainless steel components downstream of the outboard isolation valve exposed to treated water >140°F are evaluated for cracking due to stress corrosion cracking in Table 3.4.1 Item Number 3.4.1-14.

Table 3.3.1 Summary of Aging Management Evaluations for the Auxiliary Systems

Item Number	Component	Aging Effect/Mechanism	Aging Management Programs	Further Evaluation Recommended	Discussion
3.3.1-38	Stainless steel piping, piping components, and piping elements exposed to treated water >60°C (>140°F)	Cracking due to stress corrosion cracking	BWR Stress Corrosion Cracking and Water Chemistry	No	Consistent with NUREG-1801 with exceptions. The BWR Stress Corrosion Cracking program, B.2.1.1.7, and the Water Chemistry program, B.2.1.2, will be used to manage cracking due to stress corrosion cracking of the stainless steel piping, piping components, and piping elements exposed to treated water >60°C (>140°F) for the Reactor Water Cleanup System. Exceptions apply to the NUREG-1801 recommendations for the Water Chemistry program implementation.
3.3.1-39	Stainless steel BWR spent fuel storage racks exposed to treated water >60°C (>140°F)	Cracking due to stress corrosion cracking	Water Chemistry	No	Not Applicable. The spent fuel storage racks are not exposed to treated water >140°F because the spent fuel pool water temperature is maintained below 140° F.
3.3.1-40	Steel tanks in diesel fuel oil system exposed to air - outdoor (external)	Loss of material due to general, pitting, and crevice corrosion	Aboveground Steel Tanks	No	Consistent with NUREG-1801. The Aboveground Steel Tanks program, B.2.1.19, will be used to manage loss of material due to general, pitting, and crevice corrosion of the steel tanks exposed to outdoor air for the Fire Protection System.

Table 3.3.1 Summary of Aging Management Evaluations for the Auxiliary Systems

Item Number	Component	Aging Effect/Mechanism	Aging Management Programs	Further Evaluation Recommended	Discussion
3.3.1-41	High-strength steel closure bolting exposed to air with steam or water leakage	Cracking due to cyclic loading, stress corrosion cracking	Bolting Integrity	No	Not Applicable. There is no high strength closure bolting in the Auxiliary Systems.
3.3.1-42	Steel closure bolting exposed to air with steam or water leakage	Loss of material due to general corrosion	Bolting Integrity	No	Not Applicable. AMR methodology for steel closure bolting predicts pitting and crevice corrosion in addition to general corrosion. See Item Number 3.3.1-43.
3.3.1-43	Steel bolting and closure bolting exposed to air – indoor uncontrolled (external) or air – outdoor (external)	Loss of material due to general, pitting, and crevice corrosion	Bolting Integrity	No	Consistent with NUREG-1801 with exceptions. The Bolting Integrity program, B.2.1.12, will be used to manage loss of material due to general, pitting, and crevice corrosion of the steel bolting exposed to indoor or outdoor air for the Chilled Water System, Closed Cycle Cooling Water System, Compressed Air System, Containment Inerting and Purging System, Control Area Chilled Water System, Control Rod Drive System, Equipment and Floor Drainage System, Fire Protection System, Fresh Water Supply System, Fuel Pool Cooling and Cleanup System, Hardened Torus Vent System, Hydrogen Water Chemistry System, Leak Detection and Radiation Monitoring System, Makeup Demineralizer System, Primary

Table 3.3.1 Summary of Aging Management Evaluations for the Auxiliary Systems

Item Number	Component	Aging Effect/Mechanism	Aging Management Programs	Further Evaluation Recommended	Discussion
					Containment Instrument Gas System, Primary Containment Leakage Rate Testing System, Process and Post-Accident Sampling Systems, Radwaste System, Reactor Building Ventilation System, Reactor Water Cleanup System, Service Water System, Standby Diesel Generator Area Ventilation Systems, Standby Diesel Generators and Auxiliary Systems, Standby Liquid Control System, Torus Water Cleanup System, and Traversing Incore Probe System. Exceptions apply to the NUREG-1801 recommendations for the Bolting Integrity program implementation. Components in the Cranes & Hoists and Fuel Handling and Storage System have been aligned to this item number based on material, environment and aging effect. The Inspection of Overhead Heavy Load and Light Load (Related to Refueling) Handling Systems program, B.2.1.15, will be substituted to manage loss of material due to general, pitting, and crevice corrosion of the carbon and low alloy steel bolting for these systems and structures.

Table 3.3.1 Summary of Aging Management Evaluations for the Auxiliary Systems

Item Number	Component	Aging Effect/Mechanism	Aging Management Programs	Further Evaluation Recommended	Discussion
3.3.1-44	Steel compressed air system closure bolting exposed to condensation	Loss of material due to general, pitting, and crevice corrosion	Bolting Integrity	No	Not Applicable. Steel closure bolting is evaluated by Item Number 3.3.1-43. The Bolting Integrity program, B.2.1.12, is used to manage loss of material due to general, pitting, and crevice corrosion of the steel bolting.

Table 3.3.1 Summary of Aging Management Evaluations for the Auxiliary Systems

Item Number	Component	Aging Effect/Mechanism	Aging Management Programs	Further Evaluation Recommended	Discussion
3.3.1-45	Steel closure bolting exposed to air – indoor uncontrolled (external)	Loss of preload due to thermal effects, gasket creep, and self-loosening	Bolting Integrity	No	Consistent with NUREG-1801 with exceptions. The Bolting Integrity program, B.2.1.12, will be used to manage loss of preload due to thermal effects, gasket creep, and self-loosening of the carbon and low alloy steel bolting exposed to indoor air for the Chilled Water, Closed Cycle Cooling Water System, Compressed Air System, Containment Inerting and Purging System, Control Area Chilled Water System, Control Rod Drive System, Equipment and Floor Drainage System, Fire Protection System, Fresh Water Supply System, Fuel Pool Cooling and Cleanup System, Hardened Torus Vent System, Hydrogen Water Chemistry System, Leak Detection and Radiation Monitoring System, Primary Containment Instrument Gas System, Primary Containment Leakage Rate Testing System, Process and Post-Accident Sampling Systems, Reactor Building Ventilation System, Radwaste System, Reactor Water Cleanup System, Service Water System, Standby Diesel Generators and Auxiliary Systems, Standby Liquid Control System, Torus Water Cleanup System and Traversing Incore Probe System.

Table 3.3.1 Summary of Aging Management Evaluations for the Auxiliary Systems

Item Number	Component	Aging Effect/Mechanism	Aging Management Programs	Further Evaluation Recommended	Discussion
					Exceptions apply to the NUREG-1801 recommendations for the Bolting Integrity program implementation. Components in the Component Supports Commodity Group, Cranes & Hoists, Fuel Handling and Storage System, Service Water Intake Structures, Auxiliary Boiler Building, Turbine Building, Switchyard, Auxiliary Boiler Building, Auxiliary Building Control/Diesel Generator Area, Auxiliary Building Service/Radwaste Area, Reactor Building, Primary Containment, and Fire Water Pump House, systems and structures have been aligned to this item number based on material, environment and aging effect. The ASME Section XI, Subsection IWF, B.2.1.29, Structures Monitoring Program, B.2.1.32, The Inspection of Overhead Heavy Load and Light Load (Related to Refueling) Handling Systems, B.2.1.15, RG 1.127, and Inspection of Water-Control Structures, B.2.1.33, will be substituted to manage loss of preload due to self-loosening of the carbon and low alloy steel, galvanized steel, and high strength low alloy steel structural bolting and structural supports bolting for these systems and structures.

Table 3.3.1 Summary of Aging Management Evaluations for the Auxiliary Systems

Item Number	Component	Aging Effect/Mechanism	Aging Management Programs	Further Evaluation Recommended	Discussion
3.3.1-46	Stainless steel and stainless clad steel piping, piping components, piping elements, and heat exchanger components exposed to closed cycle cooling water >60°C (>140°F)	Cracking due to stress corrosion cracking	Closed-Cycle Cooling Water System	No	Consistent with NUREG-1801 with exceptions. The Closed-Cycle Cooling Water System program, B.2.1.14, will be used to manage cracking due to stress corrosion cracking of stainless steel piping, piping components, piping elements exposed to closed cycle cooling water >140°F for the Standby Diesel Generators and Auxiliary Systems. Exceptions apply to the NUREG-1801 recommendations for Closed-Cycle Cooling Water System program implementation.

Table 3.3.1 Summary of Aging Management Evaluations for the Auxiliary Systems

Item Number	Component	Aging Effect/Mechanism	Aging Management Programs	Further Evaluation Recommended	Discussion
3.3.1-47	Steel piping, piping components, piping elements, tanks, and heat exchanger components exposed to closed cycle cooling water	Loss of material due to general, pitting, and crevice corrosion	Closed-Cycle Cooling Water System	No	Consistent with NUREG-1801 with exceptions. The Closed-Cycle Cooling Water System program, B.2.1.14, will be used to manage loss of material due to general, pitting, and crevice corrosion of the steel piping, piping components and piping elements and tanks exposed to closed cycle cooling water for the Chilled Water System, Closed Cycle Cooling Water System, Control Area Chilled Water System, and Standby Diesel Generators and Auxiliary Systems. Exceptions apply to the NUREG-1801 recommendations for the Closed-Cycle Cooling Water System program implementation.
3.3.1-48	Steel piping, piping components, piping elements, tanks, and heat exchanger components exposed to closed cycle cooling water	Loss of material due to general, pitting, crevice, and galvanic corrosion	Closed-Cycle Cooling Water System	No	Consistent with NUREG-1801 with exceptions. The Closed-Cycle Cooling Water System program, B.2.1.14, will be used to manage loss of material due to general, pitting, crevice and galvanic corrosion of the steel piping, piping components, piping elements and heat exchanger components exposed to closed cycle cooling water for the Chilled Water

Table 3.3.1 Summary of Aging Management Evaluations for the Auxiliary Systems

Item Number	Component	Aging Effect/Mechanism	Aging Management Programs	Further Evaluation Recommended	Discussion
					System, Closed Cycle Cooling Water System, Control Area Chilled Water System and Service Water System. Exceptions apply to the NUREG-1801 recommendations for Closed-Cycle Cooling Water System program implementation.
3.3.1-49	Stainless steel; steel with stainless steel cladding heat exchanger components exposed to closed cycle cooling water	Loss of material due to microbiologically influenced corrosion	Closed-Cycle Cooling Water System	No	Not Applicable. AMR methodology for stainless steel heat exchanger components exposed to closed cycle cooling water predicts loss of material due to pitting and crevice corrosion. Loss of material due to microbiologically influenced corrosion is not predicted for these stainless steel heat exchanger components exposed to closed cycle cooling water, based on industry guidance and plant-specific operating experience. See Item Number 3.3.1-50.

Table 3.3.1 Summary of Aging Management Evaluations for the Auxiliary Systems

Item Number	Component	Aging Effect/Mechanism	Aging Management Programs	Further Evaluation Recommended	Discussion
3.3.1-50	Stainless steel piping, piping components, and piping elements exposed to closed cycle cooling water	Loss of material due to pitting and crevice corrosion	Closed-Cycle Cooling Water System	No	Consistent with NUREG-1801 with exceptions. The Closed-Cycle Cooling Water System program, B.2.1.14, will be used to manage loss of material due to pitting and crevice corrosion of the stainless steel piping, piping components and piping elements, heat exchanger components and tanks exposed to closed cycle cooling water in the Closed Cycle Cooling Water System, Chilled Water System, Control Area Chilled Water System, and Standby Diesel Generators and Auxiliary Systems. Exceptions apply to the NUREG-1801 recommendations for the Closed-Cycle Cooling Water System program implementation.

Table 3.3.1 Summary of Aging Management Evaluations for the Auxiliary Systems

Item Number	Component	Aging Effect/Mechanism	Aging Management Programs	Further Evaluation Recommended	Discussion
3.3.1-51	Copper alloy piping, piping components, piping elements, and heat exchanger components exposed to closed cycle cooling water	Loss of material due to pitting, crevice, and galvanic corrosion	Closed-Cycle Cooling Water System	No	Consistent with NUREG-1801 with exceptions. The Closed-Cycle Cooling Water System program, B.2.1.14, will be used to manage loss of material due to pitting, crevice and galvanic corrosion of the copper alloy piping, piping components and piping elements and heat exchanger components exposed to closed cycle cooling water for the Closed Cycle Cooling Water System, Chilled Water System, and Control Area Chilled Water System. Exceptions apply to the NUREG-1801 recommendations for the Closed-Cycle Cooling Water System program implementation.
3.3.1-52	Steel, stainless steel, and copper alloy heat exchanger tubes exposed to closed cycle cooling water	Reduction of heat transfer due to fouling	Closed-Cycle Cooling Water System	No	Consistent with NUREG-1801 with exceptions. The Closed-Cycle Cooling Water System program, B.2.1.14, will be used to manage reduction of heat transfer due to fouling of the copper alloy heat exchanger components exposed to closed cycle cooling water for the Closed Cycle Cooling Water System and Control Area Chilled Water System. Exceptions apply to the NUREG-1801 recommendations for the Closed-Cycle

Table 3.3.1 Summary of Aging Management Evaluations for the Auxiliary Systems

Item Number	Component	Aging Effect/Mechanism	Aging Management Programs	Further Evaluation Recommended	Discussion
					Cooling Water System program implementation.
3.3.1-53	Steel compressed air system piping, piping components, and piping elements exposed to condensation (internal)	Loss of material due to general and pitting corrosion	Compressed Air Monitoring	No	Consistent with NUREG-1801. The Compressed Air Monitoring program, B.2.1.16, will be used to manage loss of material due to general, pitting and crevice corrosion of the steel piping, piping components and piping elements and tanks exposed to wetted air/gas in the Primary Containment Instrument Gas System.
3.3.1-54	Stainless steel compressed air system piping, piping components, and piping elements exposed to internal condensation	Loss of material due to pitting and crevice corrosion	Compressed Air Monitoring	No	Consistent with NUREG-1801. The Compressed Air Monitoring program, B.2.1.16, will be used to manage loss of material due to general, pitting and crevice corrosion of the stainless steel piping, piping components and piping elements exposed to wetted air/gas in the Primary Containment Instrument Gas System. Components in the Containment Inerting and Purging System, Fire Protection System, Hardened Torus Vent System, Leak Detection and Radiation Monitoring System, Primary Containment Leakage Rate Testing System, Process and Post-

Table 3.3.1 Summary of Aging Management Evaluations for the Auxiliary Systems

Item Number	Component	Aging Effect/Mechanism	Aging Management Programs	Further Evaluation Recommended	Discussion
					Accident Sampling Systems, Standby Diesel Generators and Auxiliary Systems and Torus Water Cleanup System have been aligned to this item number based on material, environment and aging effect. The Periodic Inspection program, B.2.2.2, and Fire Protection program, B.2.1.17, will be substituted to manage loss of material due to pitting and crevice corrosion of the stainless steel piping, piping components and piping elements exposed to wetted air/gas in these systems.
3.3.1-55	Steel ducting closure bolting exposed to air – indoor uncontrolled (external)	Loss of material due to general corrosion	External Surfaces Monitoring	No	Consistent with NUREG-1801. The External Surfaces Monitoring program, B.2.1.25, will be used to manage loss of material due to general corrosion of steel ducting closure bolting exposed to indoor air for the Control Room and Control Area HVAC System, Reactor Building Ventilation System, Remote Shutdown Panel Room HVAC System, Service Water Intake Ventilation System, and Standby Diesel Generator Area Ventilation Systems.

Table 3.3.1 Summary of Aging Management Evaluations for the Auxiliary Systems

Item Number	Component	Aging Effect/Mechanism	Aging Management Programs	Further Evaluation Recommended	Discussion
3.3.1-56	Steel HVAC ducting and components external surfaces exposed to air – indoor uncontrolled (external)	Loss of material due to general corrosion	External Surfaces Monitoring	No	Consistent with NUREG-1801. The External Surfaces Monitoring program, B.2.1.25, will be used to manage loss of material due to general corrosion of steel HVAC ducting and components external surfaces exposed to indoor air for the Control Area Chilled Water System, Control Room and Control Area HVAC Systems, Reactor Building Ventilation System, Remote Shutdown Panel Room HVAC System, Service Water Intake Ventilation System, and Standby Diesel Generator Area Ventilation Systems.
3.3.1-57	Steel piping and components external surfaces exposed to air – indoor uncontrolled (External)	Loss of material due to general corrosion	External Surfaces Monitoring	No	Consistent with NUREG-1801. The External Surfaces Monitoring program, B.2.1.25, will be used to manage loss of material due to general corrosion of steel piping, piping components and piping elements, reactor vessel and reactor vessel nozzles, and tanks exposed to indoor air for the Chilled Water System, Closed Cycle Cooling Water System, Compressed Air System, Containment Inerting and Purging System, Control Area Chilled Water System, Control Room and Control Area HVAC Systems, Equipment and Floor Drainage System, Fire Protection System, Fresh Water Supply System, Fuel Pool

Table 3.3.1 Summary of Aging Management Evaluations for the Auxiliary Systems

Item Number	Component	Aging Effect/Mechanism	Aging Management Programs	Further Evaluation Recommended	Discussion
					Cooling and Cleanup System, Hardened Torus Vent System, Leak Detection and Radiation Monitoring System, Main Steam System, Primary Containment Instrument Gas System, Primary Containment Leakage Rate Testing System, Process and Post-Accident Sampling Systems, Radwaste System, Reactor Building Ventilation System, Reactor Pressure Vessel, Reactor Recirculation System, Reactor Water Cleanup System, Remote Shutdown Panel Room HVAC System, Service Water System, Standby Diesel Generators and Auxiliary Systems, Standby Liquid Control System, Torus Water Cleanup System, and Traversing Incore Probe System. Components in the Fire Protection System have been aligned to this item number based on material, environment and aging effect. The Fire Protection program, B.2.1.17, and Fire Water System program, B.2.1.18, will be used in addition to the External Surfaces Monitoring, B.2.1.25, program, to manage loss of material due to general corrosion of the steel piping, piping components and piping elements exposed to indoor in the Fire Protection System.

Table 3.3.1 Summary of Aging Management Evaluations for the Auxiliary Systems

Item Number	Component	Aging Effect/Mechanism	Aging Management Programs	Further Evaluation Recommended	Discussion
3.3.1-58	Steel external surfaces exposed to air – indoor uncontrolled (external), air - outdoor (external), and condensation (external)	Loss of material due to general corrosion	External Surfaces Monitoring	No	Consistent with NUREG-1801. The External Surfaces Monitoring program, B.2.1.25, will be used to manage loss of material due to general corrosion of steel piping, piping components and piping elements, heat exchanger components and tanks external surfaces exposed to indoor air for the Closed Cycle Cooling Water System, Control Area Chilled Water System, Control Rod Drive System, Equipment and Floor Drainage System, Standby Diesel Generators and Auxiliary Systems, Service Water System, Reactor Water Cleanup System, Standby Diesel Generators and Auxiliary Systems, Primary Containment Instrument Gas System, Fire Protection System, Control Rod Drive System, and Control Room and Control Area HVAC Systems. Components in the Fire Protection System have been aligned to this item number based on material, environment and aging effect. The Fire Protection program, B.2.1.17, and Fire Water System program, B.2.1.18, will be used in addition to the External Surfaces Monitoring program, B.2.1.25, to manage loss of material due to general corrosion of the steel fire doors,

Table 3.3.1 Summary of Aging Management Evaluations for the Auxiliary Systems

Item Number	Component	Aging Effect/Mechanism	Aging Management Programs	Further Evaluation Recommended	Discussion
					tanks and gas bottles exposed to indoor air in the Fire Protection system. Thermowells in the Primary Containment structure have been aligned to this item number based on material, environment and aging effect. The Structures Monitoring Program, B.2.1.32, will be substituted to manage loss of material due to general corrosion of the steel thermowells exposed to indoor air for the Primary Containment structure.
3.3.1-59	Steel heat exchanger components exposed to air – indoor uncontrolled (external) or air -outdoor (external)	Loss of material due to general, pitting, and crevice corrosion	External Surfaces Monitoring	No	Not Applicable. There are no steel heat exchanger components located outdoors and exposed to an air –outdoor (external) environment. Steel heat exchanger components located indoors and exposed to an air – indoor uncontrolled environment are included with Item Number 3.3.1-58 because the Hope Creek AMR methodology does not predict external pitting and crevice corrosion for steel heat exchanger components located indoors.
3.3.1-60	Steel piping, piping components, and piping elements exposed to air -	Loss of material due to general, pitting, and crevice corrosion	External Surfaces Monitoring	No	Consistent with NUREG-1801. The External Surfaces Monitoring program, B.2.1.25, will be used to manage loss of material due to general, pitting and crevice corrosion of the steel piping, piping

Table 3.3.1 Summary of Aging Management Evaluations for the Auxiliary Systems

Item Number	Component	Aging Effect/Mechanism	Aging Management Programs	Further Evaluation Recommended	Discussion
	outdoor (external)				components and piping elements exposed to outdoor air for the Control Room and Control Area HVAC Systems, Filtration, Recirculation, and Ventilation System, Fire Protection System, Standby Diesel Generators and Auxiliary Systems, Standby Diesel Generator Area Ventilation Systems, Service Water System, Service Water Intake Ventilation System, Reactor Building Ventilation System and Fire Pump House Ventilation System. Components in the Fire Protection System have been aligned to this item number based on material, environment and aging effect. The Fire Protection program, B.2.1.17, and Fire Water System program, B.2.1.18, will be used, in addition to the External Surfaces Monitoring program, B.2.1.25, to manage loss of material due to general, pitting and crevice corrosion of the steel piping, piping components and piping elements in the Fire Protection System. Components in the Cranes & Hoists System have been aligned to this item number based on material, environment and aging effect. The Inspection of Overhead Heavy Load and Light Load (Related to Refueling) Handling Systems, B.2.1.15, will be

Table 3.3.1 Summary of Aging Management Evaluations for the Auxiliary Systems

Item Number	Component	Aging Effect/Mechanism	Aging Management Programs	Further Evaluation Recommended	Discussion
					substituted to manage loss of material due to general, pitting and crevice corrosion of the structural steel crane and hoist components in the Cranes & Hoists System.
3.3.1-61	Elastomer fire barrier penetration seals exposed to air – outdoor or air - indoor uncontrolled	Increased hardness, shrinkage and loss of strength due to weathering	Fire Protection	No	Consistent with NUREG-1801 with exceptions. The Fire Protection program, B.2.1.17, will be used to manage Increased hardness, shrinkage and loss of strength due to weathering of the elastomer fire barrier penetration seals exposed to indoor air for the Fire Protection System. Exceptions apply to the NUREG-1801 recommendations for the Fire Protection program implementation. Compressible joint seals in the Auxiliary Building Control/Diesel Generator Area, Auxiliary Building Service/Radwaste Area, Reactor Building, and Turbine Building have been aligned to this item number based on material, environment and aging effect. The Structures Monitoring Program, B.2.1.32, will be substituted to manage increased hardness, shrinkage and loss of strength due to weathering of compressible joints and seals for these structures.

Table 3.3.1 Summary of Aging Management Evaluations for the Auxiliary Systems

Item Number	Component	Aging Effect/Mechanism	Aging Management Programs	Further Evaluation Recommended	Discussion
3.3.1-62	Aluminum piping, piping components, and piping elements exposed to raw water	Loss of material due to pitting and crevice corrosion	Fire Protection	No	Not Applicable. There is no aluminum piping, piping components, and piping elements exposed to raw water for the Auxiliary Systems.
3.3.1-63	Steel fire rated doors exposed to air – outdoor or air - indoor uncontrolled	Loss of material due to Wear	Fire Protection	No	Consistent with NUREG-1801 with exceptions. The Fire Protection program, B.2.1.17, will be used to manage loss of material due to wear of the steel fire rated doors exposed to indoor and outdoor air for the Fire Protection System. Exceptions apply to the NUREG-1801 recommendations for the Fire Protection program implementation
3.3.1-64	Steel piping, piping components, and piping elements exposed to fuel oil	Loss of material due to general, pitting, and crevice corrosion	Fire Protection and Fuel Oil Chemistry	No	Not Applicable. AMR methodology for steel piping, piping components, and piping elements exposed to fuel oil predicts microbiologically influenced corrosion, and fouling in addition to general, pitting, and crevice corrosion. This component, material, environment, and aging effect/mechanism are being monitored in Item Number 3.3.1-20 for the Auxiliary Systems.

Table 3.3.1 Summary of Aging Management Evaluations for the Auxiliary Systems

Item Number	Component	Aging Effect/Mechanism	Aging Management Programs	Further Evaluation Recommended	Discussion
3.3.1-65	Reinforced concrete structural fire barriers – walls, ceilings and floors exposed to air – indoor uncontrolled	Concrete cracking and spalling due to aggressive chemical attack, and reaction with aggregates	Fire Protection and Structures Monitoring Program	No	Not Applicable. These concrete aging effects and mechanisms are addressed with the applicable building structure in Section 3.5.
3.3.1-66	Reinforced concrete structural fire barriers – walls, ceilings and floors exposed to air – outdoor	Concrete cracking and spalling due to freeze thaw, aggressive chemical attack, and reaction with aggregates	Fire Protection and Structures Monitoring Program	No	Consistent with NUREG-1801 with exceptions. The Fire Protection program, B.2.1.17, and Structures Monitoring program, B.2.1.32, will be used to manage concrete cracking and spalling due to freeze thaw of the reinforced concrete structural fire barriers walls, ceilings, and floors exposed to outdoor air for the Fire Protection System. Exceptions apply to the NUREG-1801 recommendations for the Fire Protection program implementation.

Table 3.3.1 Summary of Aging Management Evaluations for the Auxiliary Systems

Item Number	Component	Aging Effect/Mechanism	Aging Management Programs	Further Evaluation Recommended	Discussion
3.3.1-67	Reinforced concrete structural fire barriers – walls, ceilings and floors exposed to air – outdoor or air - indoor uncontrolled	Loss of material due to corrosion of embedded steel	Fire Protection and Structures Monitoring Program	No	Consistent with NUREG-1801 with exceptions. The Fire Protection program, B.2.1.17, and Structures Monitoring program, B.2.1.32, will be used to manage loss of material due to corrosion of embedded steel of the reinforced concrete structural fire barriers walls, ceilings, and floors exposed to indoor or outdoor air for the Fire Protection System. Exceptions apply to the NUREG-1801 recommendations for the Fire Protection program implementation.
3.3.1-68	Steel piping, piping components, and piping elements exposed to raw water	Loss of material due to general, pitting, crevice, and microbiologically influenced corrosion, and fouling	Fire Water System	No	Consistent with NUREG-1801. The Fire Water System program, B.2.1.18, will be used to manage loss of material due to general, pitting, crevice, and microbiologically influenced corrosion, and fouling of steel piping, piping components and piping elements and tanks exposed to raw water for the Fire Protection System. Components in the Fresh Water Supply System, Radwaste System, and Equipment and Floor Drainage System have been aligned to this item number based on material, environment and aging effect. The Inspection of Internal Surfaces in

Table 3.3.1 Summary of Aging Management Evaluations for the Auxiliary Systems

Item Number	Component	Aging Effect/Mechanism	Aging Management Programs	Further Evaluation Recommended	Discussion
					Miscellaneous Piping and Ducting Components program, B.2.1.26, will be substituted to manage loss of material due to general, pitting, crevice, and microbiologically influenced corrosion, and fouling of the steel piping, piping components and piping elements and tanks exposed to raw water for these systems.
3.3.1-69	Stainless steel piping, piping components, and piping elements exposed to raw water	Loss of material due to pitting and crevice corrosion, and fouling	Fire Water System	No	Not Applicable. AMR methodology for stainless steel piping, piping components, and piping elements exposed to raw water predicts microbiologically influenced corrosion in addition to general, pitting, and crevice corrosion and fouling. The Fire Protection System stainless steel piping, piping components, and piping elements exposed to raw water are included in Item Number 3.2.1-38.
3.3.1-70	Copper alloy piping, piping components, and piping elements exposed to raw water	Loss of material due to pitting, crevice, and microbiologically influenced corrosion, and fouling	Fire Water System	No	Consistent with NUREG-1801. The Fire Water System program, B.2.1.18, will be used to manage loss of material due to pitting, crevice, and microbiologically influenced corrosion, and fouling of the copper alloy piping, piping components and piping elements exposed to raw water for the Fire Protection System.

Table 3.3.1 Summary of Aging Management Evaluations for the Auxiliary Systems

Item Number	Component	Aging Effect/Mechanism	Aging Management Programs	Further Evaluation Recommended	Discussion
3.3.1-71	Steel piping, piping components, and piping elements exposed to moist air or condensation (Internal)	Loss of material due to general, pitting, and crevice corrosion	Inspection of Internal Surfaces in Miscellaneous Piping and Ducting Components	No	Consistent with NUREG-1801. The Inspection of Internal Surfaces in Miscellaneous Piping and Ducting Components program, B.2.1.26, will be used to manage loss of material due to general, pitting, and crevice corrosion of the steel piping, piping components and piping elements exposed to wetted air for the Containment Inerting and Purging System, Control Area Chilled Water System, Control Rod Drive System, Control Room and Control Area HVAC Systems, Fire Protection System, Fuel Pool Cooling and Cleanup System, Hardened Torus Vent System, Leak Detection and Radiation Monitoring System, Primary Containment Leakage Rate Testing System, Process and Post-Accident Sampling Systems, Reactor Building Ventilation System, Remote Shutdown Panel Room HVAC System and Standby Diesel Generators and Auxiliary Systems. Components in the Fire Protection System have been aligned to this item number based on material, environment and aging effect. The Fire Protection program will be substituted to manage loss of material due to general, pitting and crevice corrosion of

Table 3.3.1 Summary of Aging Management Evaluations for the Auxiliary Systems

Item Number	Component	Aging Effect/Mechanism	Aging Management Programs	Further Evaluation Recommended	Discussion
					the steel piping, piping components and piping elements exposed to wetted air for the Fire Protection System.
3.3.1-72	Steel HVAC ducting and components internal surfaces exposed to condensation (Internal)	Loss of material due to general, pitting, crevice, and (for drip pans and drain lines) microbiologically influenced corrosion	Inspection of Internal Surfaces in Miscellaneous Piping and Ducting Components	No	Consistent with NUREG-1801. The Inspection of Internal Surfaces in Miscellaneous Piping and Ducting Components, B.2.1.26, will be used to manage loss of material due to general, pitting, crevice, and microbiologically influenced corrosion (drains) of the steel HVAC ducting and components internal surfaces, and compressor internal surfaces exposed to wetted air for the Control Room and Control Area HVAC Systems, Fire Pump House Ventilation System, Primary Containment Instrument Gas System, Reactor Building Ventilation System, Remote Shutdown Panel Room HVAC System, Service Water Intake Ventilation System and Standby Diesel Generator Area Ventilation System. Components in the Fire Protection System have been aligned to this item number based on material, environment and aging effect. The Fire Protection program will be substituted to manage loss of material due to general, pitting and crevice corrosion of

Table 3.3.1 Summary of Aging Management Evaluations for the Auxiliary Systems

Item Number	Component	Aging Effect/Mechanism	Aging Management Programs	Further Evaluation Recommended	Discussion
					the steel damper housings for this system.
3.3.1-73	Steel crane structural girders in load handling system exposed to air-indoor uncontrolled (external)	Loss of material due to general corrosion	Inspection of Overhead Heavy Load and Light Load (Related to Refueling) Handling Systems	No	Consistent with NUREG-1801. The Inspection of Overhead Heavy Load and Light Load (Related to Refueling) Handling Systems program, B.2.1.15, will be used to manage loss of material due to general corrosion of the steel crane structural girders exposed to indoor air in the Cranes & Hoists System and Fuel Handling and Storage System.
3.3.1-74	Steel cranes - rails exposed to air – indoor uncontrolled (external)	Loss of material due to Wear	Inspection of Overhead Heavy Load and Light Load (Related to Refueling) Handling Systems	No	Consistent with NUREG-1801. The Inspection of Overhead Heavy Load and Light Load (Related to Refueling) Handling Systems program, B.2.1.15, will be used to manage loss of material due to wear of the steel crane rails exposed to indoor air for the Cranes and Hoists System and Fuel Handling and Storage System.
3.3.1-75	Elastomer seals and components exposed to raw water	Hardening and loss of strength due to elastomer degradation; loss of material due to erosion	Open-Cycle Cooling Water System	No	Consistent with NUREG-1801. The Open-Cycle Cooling Water System program, B.2.1.13, will be used to manage hardening and loss of strength due to elastomer degradation of the elastomer seals exposed to raw water for the Service Water System.

Table 3.3.1 Summary of Aging Management Evaluations for the Auxiliary Systems

Item Number	Component	Aging Effect/Mechanism	Aging Management Programs	Further Evaluation Recommended	Discussion
3.3.1-76	Steel piping, piping components, and piping elements (without lining/coating or with degraded lining/coating) exposed to raw water	Loss of material due to general, pitting, crevice, and microbiologically influenced corrosion, fouling, and lining/coating degradation	Open-Cycle Cooling Water System	No	Consistent with NUREG-1801. The Open-Cycle Cooling Water System program, B.2.1.13, will be used to manage loss of material due to general, pitting, crevice, and microbiologically influenced corrosion, and fouling of the steel piping, piping components and piping elements exposed to raw water for the Service Water System.
3.3.1-77	Steel heat exchanger components exposed to raw water	Loss of material due to general, pitting, crevice, galvanic, and microbiologically influenced corrosion, and fouling	Open-Cycle Cooling Water System	No	Components in the Fire Protection System, Equipment and Floor Drainage System and Fresh Water Supply System have been aligned to this item number based on material, environment and aging effect. The Fire Water System program, B.2.1.18, and the Inspection of Internal Surfaces in Miscellaneous Piping and Ducting Components, B.2.1.26, will be substituted to manage loss of material due to general, pitting, crevice, galvanic, and microbiologically influenced corrosion, and fouling of piping, piping components and piping elements exposed to raw water in these systems.

Table 3.3.1 Summary of Aging Management Evaluations for the Auxiliary Systems

Item Number	Component	Aging Effect/Mechanism	Aging Management Programs	Further Evaluation Recommended	Discussion
3.3.1-78	Stainless steel, nickel alloy, and copper alloy piping, piping components, and piping elements exposed to raw water	Loss of material due to pitting and crevice corrosion	Open-Cycle Cooling Water System	No	Not Applicable. The stainless steel and copper alloy piping, piping components and piping elements exposed to raw water in the Control Room and Control Area HVAC Systems, Equipment and Floor Drainage System, Fire Protection System, Fresh Water Supply System, and Radwaste System do not reference this item because the raw water environment associated with these systems is well water, liquid radwaste or drainage water and is not associated with open-cycle cooling water. Stainless steel components in the Service Water system exposed to raw water have also been determined to be subject to the additional aging mechanism of microbiologically influenced corrosion and fouling, and are therefore evaluated in Table 3.4.1 Item Number 3.4.1-33. Copper alloy and nickel alloy components in the Service Water system exposed to raw water have been determined to be subject to the additional aging mechanism of microbiologically influenced corrosion and fouling, and are therefore evaluated with Item Number 3.3.1-81.

Table 3.3.1 Summary of Aging Management Evaluations for the Auxiliary Systems

Item Number	Component	Aging Effect/Mechanism	Aging Management Programs	Further Evaluation Recommended	Discussion
3.3.1-79	Stainless steel piping, piping components, and piping elements exposed to raw water	Loss of material due to pitting and crevice corrosion, and fouling	Open-Cycle Cooling Water System	No	Not Applicable. The stainless steel piping, piping components and piping elements exposed to raw water in the Equipment and Floor Drainage System, Fire Protection System, Fresh Water Supply System, and Radwaste System do not reference this item because the raw water environment associated with these systems is well water, liquid radwaste or drainage water and is not associated with open-cycle cooling water. Stainless steel components in the Service Water system exposed to raw water have also been determined to be subject to the additional aging mechanism of microbiologically influenced corrosion, and are therefore evaluated in Table 3.4.1 Item Number 3.4.1-33.
3.3.1-80	Stainless steel and copper alloy piping, piping components, and piping elements exposed to raw water	Loss of material due to pitting, crevice, and microbiologically influenced corrosion	Open-Cycle Cooling Water System	No	Not Applicable. The stainless steel and copper alloy piping, piping components and piping elements exposed to raw water in the Closed Cycle Cooling Water System, Control Room and Control Area HVAC Systems, Equipment and Floor Drainage System, Fire Protection System, Fresh Water Supply System, Leak Detection and Radiation Monitoring System, Radwaste System and Remote Shutdown Panel

Table 3.3.1 Summary of Aging Management Evaluations for the Auxiliary Systems

Item Number	Component	Aging Effect/Mechanism	Aging Management Programs	Further Evaluation Recommended	Discussion
					Room HVAC System do not reference this item because the raw water environment associated with these systems is well water, liquid radwaste or drainage water and is not associated with open-cycle cooling water. Copper alloy components in the Service Water system exposed to raw water have been determined to be subject to the additional aging mechanism of fouling, and are therefore evaluated with Item Number 3.3.1-81. Stainless steel components in the Service Water system exposed to raw water have also been determined to be subject to the additional aging mechanism of fouling, and are therefore evaluated in Table 3.4.1 Item Number 3.4.1-33.
3.3.1-81	Copper alloy piping, piping components, and piping elements, exposed to raw water	Loss of material due to pitting, crevice, and microbiologically influenced corrosion, and fouling	Open-Cycle Cooling Water System	No	Consistent with NUREG-1801. The Open-Cycle Cooling Water System program, B.2.1.13, will be used to manage loss of material due to pitting, crevice, and microbiologically influenced corrosion, and fouling of the copper alloy piping, piping components and piping elements exposed to raw water for the Service Water System.

Table 3.3.1 Summary of Aging Management Evaluations for the Auxiliary Systems

Item Number	Component	Aging Effect/Mechanism	Aging Management Programs	Further Evaluation Recommended	Discussion
					Components in the Equipment and Floor Drainage System and Fresh Water Supply System have been aligned to this item number based on material, environment and aging effect. The Periodic Inspection program, B.2.2.2, will be substituted to manage loss of material due to pitting, crevice, and microbiologically influenced corrosion, and fouling of the copper alloy piping, piping components, and piping elements exposed to raw water in these systems.
3.3.1-82	Copper alloy heat exchanger components exposed to raw water	Loss of material due to pitting, crevice, galvanic, and microbiologically influenced corrosion, and fouling	Open-Cycle Cooling Water System	No	Not Applicable. There are no copper alloy heat exchanger tubes exposed to raw water in the Auxiliary Systems at Hope Creek in the scope of license renewal. The copper alloy Heat Exchanger Components (Thermo-siphon) evaluated with the Closed Cycle Cooling Water System are exposed to glycol coolant that is considered raw water for purposes of determining aging effects because it is not monitored by a chemistry program. The Periodic Inspection program, B.2.2.2, will be used to manage loss of material due to pitting, crevice and microbiologically influenced corrosion of the copper alloy

Table 3.3.1 Summary of Aging Management Evaluations for the Auxiliary Systems

Item Number	Component	Aging Effect/Mechanism	Aging Management Programs	Further Evaluation Recommended	Discussion
					Heat Exchanger Components (Thermo-siphon) exposed to this environment.
3.3.1-83	Stainless steel and copper alloy heat exchanger tubes exposed to raw water	Reduction of heat transfer due to fouling	Open-Cycle Cooling Water System	No	Not Applicable. There are no stainless steel or copper alloy heat exchanger tubes exposed to raw water in the Auxiliary Systems at Hope Creek in the scope of license renewal. The copper alloy Heat Exchanger Components (Thermo-siphon) evaluated with the Closed Cycle Cooling Water System are exposed to glycol coolant that is considered raw water for purposes of determining aging effects because it is not monitored by a chemistry program. The Periodic Inspection program, B.2.2.2, will be used to manage reduction of heat transfer due to fouling of the copper alloy Heat Exchanger Components (Thermo-siphon) exposed to this environment.

Table 3.3.1 Summary of Aging Management Evaluations for the Auxiliary Systems

Item Number	Component	Aging Effect/Mechanism	Aging Management Programs	Further Evaluation Recommended	Discussion
3.3.1-84	Copper alloy >15% Zn piping, piping components, piping elements, and heat exchanger components exposed to raw water, treated water, or closed cycle cooling water	Loss of material due to selective leaching	Selective Leaching of Materials	No	Consistent with NUREG-1801. The Selective Leaching of Materials program, B.2.1.23, will be used to manage loss of material due to selective leaching of the copper alloy with greater than 15% zinc piping, piping components, and piping elements and heat exchanger components exposed to raw water, closed cycle cooling water or treated water for the Closed Cycle Cooling Water System, Fire Protection System, High Pressure Coolant Injection (HPCI) System, and Reactor Core Isolation Cooling (RCIC) System.
3.3.1-85	Gray cast iron piping, piping components, and piping elements exposed to soil, raw water, treated water, or closed-cycle cooling water	Loss of material due to selective leaching	Selective Leaching of Materials	No	Consistent with NUREG-1801. The Selective Leaching of Materials program, B.2.1.23, will be used to manage loss of material due to selective leaching of the gray cast iron piping, piping components, and piping elements, tanks and heat exchanger components exposed to soil, raw water, or closed-cycle cooling water for the Chilled Water System, Closed Cycle Cooling Water System, Equipment and Floor Drainage System, Fire Protection System and Fresh Water Supply System.

Table 3.3.1 Summary of Aging Management Evaluations for the Auxiliary Systems

Item Number	Component	Aging Effect/Mechanism	Aging Management Programs	Further Evaluation Recommended	Discussion
3.3.1-86	Structural steel (new fuel storage rack assembly) exposed to air – indoor uncontrolled (external)	Loss of material due to general, pitting, and crevice corrosion	Structures Monitoring Program	No	Not Applicable. The new fuel storage rack assembly at Hope Creek is aluminum and is not subject to aging effects in an indoor air environment. See Table 3.2.1 Item Number 3.2.1-50.
3.3.1-87	PWRs only				
3.3.1-88	PWRs only				
3.3.1-89	PWRs only				
3.3.1-90	PWRs only				
3.3.1-91	PWRs only				
3.3.1-92	Galvanized steel piping, piping components, and piping elements exposed to air – indoor uncontrolled	None	None	NA - No AEM or AMP	Consistent with NUREG-1801.

Table 3.3.1 Summary of Aging Management Evaluations for the Auxiliary Systems

Item Number	Component	Aging Effect/Mechanism	Aging Management Programs	Further Evaluation Recommended	Discussion
3.3.1-93	Glass piping elements exposed to air, air – indoor uncontrolled (external), fuel oil, lubricating oil, raw water, treated water, and treated borated water	None	None	NA - No AEM or AMP	Consistent with NUREG-1801.
3.3.1-94	Stainless steel and nickel alloy piping, piping components, and piping elements exposed to air – indoor uncontrolled (external)	None	None	NA - No AEM or AMP	Consistent with NUREG-1801.
3.3.1-95	Steel and aluminum piping, piping components, and piping elements exposed to air – indoor controlled (external)	None	None	NA - No AEM or AMP	Not Applicable. All indoor air environments at Hope Creek are assumed to be uncontrolled for license renewal aging management review.

Table 3.3.1 Summary of Aging Management Evaluations for the Auxiliary Systems

Item Number	Component	Aging Effect/Mechanism	Aging Management Programs	Further Evaluation Recommended	Discussion
3.3.1-96	Steel and stainless steel piping, piping components, and piping elements in concrete	None	None	NA - No AEM or AMP	Consistent with NUREG-1801.
3.3.1-97	Steel, stainless steel, aluminum, and copper alloy piping, piping components, and piping elements exposed to gas	None	None	NA - No AEM or AMP	Consistent with NUREG-1801.
3.3.1-98	Steel, stainless steel, and copper alloy piping, piping components, and piping elements exposed to dried air	None	None	NA - No AEM or AMP	The Compressed Air Monitoring program, B.2.1.16, will be used to preclude aging effects for steel, stainless steel, and copper alloy piping, piping components, and piping elements in the Compressed Air System, Primary Containment Instrument Gas System and Reactor Building Ventilation Systems by maintaining dry air conditions in the system.
3.3.1-99	PWRs only				

Table 3.3.2-1
Chilled Water System
Summary of Aging Management Evaluation

Table 3.3.2-1 Chilled Water System

Component Type	Intended Function	Material	Environment	Aging Effect Requiring Management	Aging Management Programs	NUREG-1801 Vol. 2 Item	Table 1 Item	Notes
Bolting	Mechanical Closure	Carbon and Low Alloy Steel Bolting	Air - Indoor (External)	Loss of Material/General, Pitting and Crevice Corrosion	Bolting Integrity	VII.I-4	3.3.1-43	B
Bolting	Mechanical Closure	Carbon and Low Alloy Steel Bolting	Air - Indoor (External)	Loss of Preload/Thermal Effects, Gasket Creep, and Self-Loosening	Bolting Integrity	VII.I-5	3.3.1-45	B
Flexible Connection	Leakage Boundary	Stainless Steel	Air - Indoor (External)	None	None	VII.J-15	3.3.1-94	A
Flexible Connection	Leakage Boundary	Stainless Steel	Closed Cycle Cooling Water (Internal)	Loss of Material/Pitting and Crevice Corrosion	Closed-Cycle Cooling Water System	VII.C2-10	3.3.1-50	B
Flow Device	Leakage Boundary	Stainless Steel	Air - Indoor (External)	None	None	VII.J-15	3.3.1-94	A
Flow Device	Leakage Boundary	Stainless Steel	Closed Cycle Cooling Water (Internal)	Loss of Material/Pitting and Crevice Corrosion	Closed-Cycle Cooling Water System	VII.C2-10	3.3.1-50	B
Flow Element	Leakage Boundary	Stainless Steel	Air - Indoor (External)	None	None	VII.J-15	3.3.1-94	A
Flow Element	Leakage Boundary	Stainless Steel	Closed Cycle Cooling Water (Internal)	Loss of Material/Pitting and Crevice Corrosion	Closed-Cycle Cooling Water System	VII.C2-10	3.3.1-50	B
Heat Exchanger Components (CRD Facility Unit Coolers)	Leakage Boundary	Copper Alloy with less than 15% Zinc (Tubes)	Air/Gas - Wetted (External)	Loss of Material/Pitting and Crevice Corrosion	Periodic Inspection	VII.F1-16	3.3.1-25	E, 1
Heat Exchanger Components (CRD Facility Unit Coolers)	Leakage Boundary	Copper Alloy with less than 15% Zinc (Tubes)	Closed Cycle Cooling Water (Internal)	Loss of Material/Pitting and Crevice Corrosion	Closed-Cycle Cooling Water System	VII.C2-4	3.3.1-51	D, 2
Heat Exchanger Components (DW Cooler)	Leakage Boundary	Copper Alloy with less than 15% Zinc (Tubes)	Air/Gas - Wetted (External)	Loss of Material/Pitting and Crevice Corrosion	Periodic Inspection	VII.F1-16	3.3.1-25	E, 1

Table 3.3.2-1 Chilled Water System (Continued)

Component Type	Intended Function	Material	Environment	Aging Effect Requiring Management	Aging Management Programs	NUREG-1801 Vol. 2 Item	Table 1 Item	Notes
Heat Exchanger Components (DW Cooler)	Leakage Boundary	Copper Alloy with less than 15% Zinc (Tubes)	Closed Cycle Cooling Water (Internal)	Loss of Material/Pitting and Crevice Corrosion	Closed-Cycle Cooling Water System	VII.C2-4	3.3.1-51	D, 2
Heat Exchanger Components (Recirc Pump Motor Air Cooler)	Leakage Boundary	Copper Alloy with less than 15% Zinc (Tubes)	Air/Gas - Wetted (External)	Loss of Material/Pitting and Crevice Corrosion	Periodic Inspection	VII.F1-16	3.3.1-25	E, 1
Heat Exchanger Components (Recirc Pump Motor Air Cooler)	Leakage Boundary	Copper Alloy with less than 15% Zinc (Tubes)	Closed Cycle Cooling Water (Internal)	Loss of Material/Pitting and Crevice Corrosion	Closed-Cycle Cooling Water System	VII.C2-4	3.3.1-51	D, 2
Heat Exchanger Components (Steam Tunnel Coolers)	Leakage Boundary	Copper Alloy with less than 15% Zinc (Tubes)	Air/Gas - Wetted (External)	Loss of Material/Pitting and Crevice Corrosion	Periodic Inspection	VII.F1-16	3.3.1-25	E, 1
Heat Exchanger Components (Steam Tunnel Coolers)	Leakage Boundary	Copper Alloy with less than 15% Zinc (Tubes)	Closed Cycle Cooling Water (Internal)	Loss of Material/Pitting and Crevice Corrosion	Closed-Cycle Cooling Water System	VII.C2-4	3.3.1-51	D, 2
Piping and Fittings	Leakage Boundary	Carbon Steel	Air - Indoor (External)	Loss of Material/General Corrosion	External Surfaces Monitoring	VII.D-3	3.3.1-57	A
Piping and Fittings	Leakage Boundary	Carbon Steel	Closed Cycle Cooling Water (Internal)	Loss of Material/General, Pitting, Crevice and Galvanic Corrosion	Closed-Cycle Cooling Water System	VII.C2-1	3.3.1-48	D
Piping and Fittings	Leakage Boundary	Copper Alloy with less than 15% Zinc	Air - Indoor (External)	None	None	VIII.I-2	3.4.1-41	A
Piping and Fittings	Leakage Boundary	Copper Alloy with less than 15% Zinc	Closed Cycle Cooling Water (Internal)	Loss of Material/Pitting and Crevice Corrosion	Closed-Cycle Cooling Water System	VII.C2-4	3.3.1-51	B, 2
Piping and Fittings	Leakage Boundary	Stainless Steel	Air - Indoor (External)	None	None	VII.J-15	3.3.1-94	A
Piping and Fittings	Leakage Boundary	Stainless Steel	Closed Cycle Cooling Water (Internal)	Loss of Material/Pitting and Crevice Corrosion	Closed-Cycle Cooling Water System	VII.C2-10	3.3.1-50	B
Piping and Fittings	Pressure Boundary	Carbon Steel	Air - Indoor (External)	Loss of Material/General Corrosion	External Surfaces Monitoring	VII.D-3	3.3.1-57	A

Table 3.3.2-1 Chilled Water System (Continued)

Component Type	Intended Function	Material	Environment	Aging Effect Requiring Management	Aging Management Programs	NUREG-1801 Vol. 2 Item	Table 1 Item	Notes
Piping and Fittings	Pressure Boundary	Carbon Steel	Closed Cycle Cooling Water (Internal)	Loss of Material/General, Pitting and Crevice Corrosion	Closed-Cycle Cooling Water System	VII.C2-14	3.3.1-47	B
Pump Casing (CRD Facility Chilled Water Pump)	Leakage Boundary	Ductile Cast Iron	Air - Indoor (External)	Loss of Material/General Corrosion	External Surfaces Monitoring	VII.D-3	3.3.1-57	A
Pump Casing (CRD Facility Chilled Water Pump)	Leakage Boundary	Ductile Cast Iron	Closed Cycle Cooling Water (Internal)	Loss of Material/General, Pitting and Crevice Corrosion	Closed-Cycle Cooling Water System	VII.C2-14	3.3.1-47	B
Restricting Orifices	Leakage Boundary	Stainless Steel	Air - Indoor (External)	None	None	VII.J-15	3.3.1-94	A
Restricting Orifices	Leakage Boundary	Stainless Steel	Closed Cycle Cooling Water (Internal)	Loss of Material/Pitting and Crevice Corrosion	Closed-Cycle Cooling Water System	VII.C2-10	3.3.1-50	B
Thermowell	Leakage Boundary	Carbon Steel	Air - Indoor (External)	Loss of Material/General Corrosion	External Surfaces Monitoring	VII.D-3	3.3.1-57	A
Thermowell	Leakage Boundary	Carbon Steel	Closed Cycle Cooling Water (Internal)	Loss of Material/General, Pitting and Crevice Corrosion	Closed-Cycle Cooling Water System	VII.C2-14	3.3.1-47	B
Thermowell	Leakage Boundary	Stainless Steel	Air - Indoor (External)	None	None	VII.J-15	3.3.1-94	A
Thermowell	Leakage Boundary	Stainless Steel	Closed Cycle Cooling Water (Internal)	Loss of Material/Pitting and Crevice Corrosion	Closed-Cycle Cooling Water System	VII.C2-10	3.3.1-50	B
Valve Body	Leakage Boundary	Carbon Steel	Air - Indoor (External)	Loss of Material/General Corrosion	External Surfaces Monitoring	VII.D-3	3.3.1-57	A
Valve Body	Leakage Boundary	Carbon Steel	Closed Cycle Cooling Water (Internal)	Loss of Material/General, Pitting and Crevice Corrosion	Closed-Cycle Cooling Water System	VII.C2-14	3.3.1-47	B
Valve Body	Leakage Boundary	Copper Alloy with less than 15% Zinc	Air - Indoor (External)	None	None	VIII.I-2	3.4.1-41	A
Valve Body	Leakage Boundary	Copper Alloy with less than 15% Zinc	Closed Cycle Cooling Water (Internal)	Loss of Material/Pitting and Crevice Corrosion	Closed-Cycle Cooling Water System	VII.C2-4	3.3.1-51	B, 2

Table 3.3.2-1 Chilled Water System (Continued)

Component Type	Intended Function	Material	Environment	Aging Effect Requiring Management	Aging Management Programs	NUREG-1801 Vol. 2 Item	Table 1 Item	Notes
Valve Body	Leakage Boundary	Gray Cast Iron	Air - Indoor (External)	Loss of Material/General Corrosion	External Surfaces Monitoring	VII.D-3	3.3.1-57	A
Valve Body	Leakage Boundary	Gray Cast Iron	Closed Cycle Cooling Water (Internal)	Loss of Material/General, Pitting and Crevice Corrosion	Closed-Cycle Cooling Water System	VII.C2-14	3.3.1-47	B
Valve Body	Leakage Boundary	Gray Cast Iron	Closed Cycle Cooling Water (Internal)	Loss of Material/Selective Leaching	Selective Leaching of Materials	VII.C2-8	3.3.1-85	A
Valve Body	Leakage Boundary	Stainless Steel	Air - Indoor (External)	None	None	VII.J-15	3.3.1-94	A
Valve Body	Leakage Boundary	Stainless Steel	Closed Cycle Cooling Water (Internal)	Loss of Material/Pitting and Crevice Corrosion	Closed-Cycle Cooling Water System	VII.C2-10	3.3.1-50	B
Valve Body	Pressure Boundary	Carbon Steel	Air - Indoor (External)	Loss of Material/General Corrosion	External Surfaces Monitoring	VII.D-3	3.3.1-57	A
Valve Body	Pressure Boundary	Carbon Steel	Closed Cycle Cooling Water (Internal)	Loss of Material/General, Pitting and Crevice Corrosion	Closed-Cycle Cooling Water System	VII.C2-14	3.3.1-47	B

Notes	Definition of Note
A	Consistent with NUREG-1801 item for component, material, environment, and aging effect. AMP is consistent with NUREG-1801 AMP.
B	Consistent with NUREG-1801 item for component, material, environment, and aging effect. AMP takes some exceptions to NUREG-1801 AMP.
C	Component is different, but consistent with NUREG-1801 item for material, environment, and aging effect. AMP is consistent with NUREG-1801 AMP.
D	Component is different, but consistent with NUREG-1801 item for material, environment, and aging effect. AMP takes some exceptions to NUREG-1801 AMP.
E	Consistent with NUREG-1801 item for material, environment and aging effect, but a different aging management program is credited or NUREG-1801 identifies a plant-specific aging management program.
F	Material not in NUREG-1801 for this component.
G	Environment not in NUREG-1801 for this component and material.
H	Aging effect not in NUREG-1801 for this component, material and environment combination.
I	Aging effect in NUREG-1801 for this component, material and environment combination is not applicable.
J	Neither the component nor the material and environment combination is evaluated in NUREG-1801.

Plant Specific Notes:

1. NUREG-1801 specifies a plant-specific program. The Periodic Inspection aging management program will be used to manage the identified aging effects for this component type, material and environment combination.

2. The aging mechanism of Galvanic Corrosion for this component, material and environment combination is not applicable.

Table 3.3.2-2
Closed Cycle Cooling Water System
Summary of Aging Management Evaluation

Table 3.3.2-2 Closed Cycle Cooling Water System

Component Type	Intended Function	Material	Environment	Aging Effect Requiring Management	Aging Management Programs	NUREG-1801 Vol. 2 Item	Table 1 Item	Notes
Bolting	Mechanical Closure	Carbon and Low Alloy Steel Bolting	Air - Indoor (External)	Loss of Material/General, Pitting and Crevice Corrosion	Bolting Integrity	VII.I-4	3.3.1-43	B
Bolting	Mechanical Closure	Carbon and Low Alloy Steel Bolting	Air - Indoor (External)	Loss of Preload/Thermal Effects, Gasket Creep, and Self-Loosening	Bolting Integrity	VII.I-5	3.3.1-45	B
Filter Housing	Leakage Boundary	Carbon Steel	Air - Indoor (External)	Loss of Material/General Corrosion	External Surfaces Monitoring	VII.D-3	3.3.1-57	A
Filter Housing	Leakage Boundary	Carbon Steel	Closed Cycle Cooling Water (Internal)	Loss of Material/General, Pitting and Crevice Corrosion	Closed-Cycle Cooling Water System	VII.C2-14	3.3.1-47	B
Flow Device	Leakage Boundary	Stainless Steel	Air - Indoor (External)	None	None	VII.J-15	3.3.1-94	A
Flow Device	Leakage Boundary	Stainless Steel	Closed Cycle Cooling Water (Internal)	Loss of Material/Pitting and Crevice Corrosion	Closed-Cycle Cooling Water System	VII.C2-10	3.3.1-50	B
Flow Element	Leakage Boundary	Carbon Steel	Air - Indoor (External)	Loss of Material/General Corrosion	External Surfaces Monitoring	VII.D-3	3.3.1-57	A
Flow Element	Leakage Boundary	Carbon Steel	Closed Cycle Cooling Water (Internal)	Loss of Material/General, Pitting and Crevice Corrosion	Closed-Cycle Cooling Water System	VII.C2-14	3.3.1-47	B
Flow Element	Leakage Boundary	Stainless Steel	Air - Indoor (External)	None	None	VII.J-15	3.3.1-94	A
Flow Element	Leakage Boundary	Stainless Steel	Closed Cycle Cooling Water (Internal)	Loss of Material/Pitting and Crevice Corrosion	Closed-Cycle Cooling Water System	VII.C2-10	3.3.1-50	B
Flow Element	Pressure Boundary	Stainless Steel	Air - Indoor (External)	None	None	VII.J-15	3.3.1-94	A
Flow Element	Pressure Boundary	Stainless Steel	Closed Cycle Cooling Water (Internal)	Loss of Material/Pitting and Crevice Corrosion	Closed-Cycle Cooling Water System	VII.C2-10	3.3.1-50	B

Table 3.3.2-2 Closed Cycle Cooling Water System (Continued)

Component Type	Intended Function	Material	Environment	Aging Effect Requiring Management	Aging Management Programs	NUREG-1801 Vol. 2 Item	Table 1 Item	Notes
Heat Exchanger Components (1E Panel Room Chillers - Condensers)	Heat Transfer	Copper Alloy with less than 15% Zinc (Tubes)	Air/Gas - Dry (External)	None	None	VII.J-4	3.3.1-97	C
Heat Exchanger Components (1E Panel Room Chillers - Condensers)	Heat Transfer	Copper Alloy with less than 15% Zinc (Tubes)	Closed Cycle Cooling Water (Internal)	Reduction of Heat Transfer/Fouling	Closed-Cycle Cooling Water System	VII.C2-2	3.3.1-52	B
Heat Exchanger Components (1E Panel Room Chillers - Condensers)	Pressure Boundary	Carbon Steel (Shell Side Components)	Air - Indoor (External)	Loss of Material/General Corrosion	External Surfaces Monitoring	VII.I-8	3.3.1-58	A
Heat Exchanger Components (1E Panel Room Chillers - Condensers)	Pressure Boundary	Carbon Steel (Shell Side Components)	Air/Gas - Dry (Internal)	None	None	VII.J-23	3.3.1-97	C
Heat Exchanger Components (1E Panel Room Chillers - Condensers)	Pressure Boundary	Carbon Steel (Tube Side Components)	Air - Indoor (External)	Loss of Material/General Corrosion	External Surfaces Monitoring	VII.I-8	3.3.1-58	A
Heat Exchanger Components (1E Panel Room Chillers - Condensers)	Pressure Boundary	Carbon Steel (Tube Side Components)	Closed Cycle Cooling Water (Internal)	Loss of Material/General, Pitting, Crevice and Galvanic Corrosion	Closed-Cycle Cooling Water System	VII.C2-1	3.3.1-48	B
Heat Exchanger Components (1E Panel Room Chillers - Condensers)	Pressure Boundary	Carbon Steel (Tubesheet)	Air/Gas - Dry (Internal)	None	None	VII.J-23	3.3.1-97	C

Table 3.3.2-2 Closed Cycle Cooling Water System (Continued)

Component Type	Intended Function	Material	Environment	Aging Effect Requiring Management	Aging Management Programs	NUREG-1801 Vol. 2 Item	Table 1 Item	Notes
Heat Exchanger Components (1E Panel Room Chillers - Condensers)	Pressure Boundary	Carbon Steel (Tubesheet)	Closed Cycle Cooling Water (Internal)	Loss of Material/General, Pitting, Crevice and Galvanic Corrosion	Closed-Cycle Cooling Water System	VII.C2-1	3.3.1-48	B
Heat Exchanger Components (1E Panel Room Chillers - Condensers)	Pressure Boundary	Copper Alloy with less than 15% Zinc (Tubes)	Air/Gas - Dry (External)	None	None	VII.J-4	3.3.1-97	C
Heat Exchanger Components (1E Panel Room Chillers - Condensers)	Pressure Boundary	Copper Alloy with less than 15% Zinc (Tubes)	Closed Cycle Cooling Water (Internal)	Loss of Material/Pitting, Crevice and Galvanic Corrosion	Closed-Cycle Cooling Water System	VII.C2-4	3.3.1-51	D
Heat Exchanger Components (CRD Pump Cooler)	Leakage Boundary	Carbon Steel (Tube Side Components)	Air - Indoor (External)	Loss of Material/General Corrosion	External Surfaces Monitoring	VII.I-8	3.3.1-58	A
Heat Exchanger Components (CRD Pump Cooler)	Leakage Boundary	Carbon Steel (Tube Side Components)	Closed Cycle Cooling Water (Internal)	Loss of Material/General, Pitting, Crevice and Galvanic Corrosion	Closed-Cycle Cooling Water System	VII.C2-1	3.3.1-48	B
Heat Exchanger Components (CS Pump Room Coolers)	Heat Transfer	Copper Alloy with less than 15% Zinc (Tubes and Fins)	Air/Gas - Wetted (External)	Reduction of Heat Transfer/Fouling	Periodic Inspection			H, 1
Heat Exchanger Components (CS Pump Room Coolers)	Heat Transfer	Copper Alloy with less than 15% Zinc (Tubes and Fins)	Closed Cycle Cooling Water (Internal)	Reduction of Heat Transfer/Fouling	Closed-Cycle Cooling Water System	VII.C2-2	3.3.1-52	B
Heat Exchanger Components (CS Pump Room Coolers)	Pressure Boundary	Copper Alloy with less than 15% Zinc (Tubes)	Air/Gas - Wetted (External)	Loss of Material/Pitting and Crevice Corrosion	Periodic Inspection	VII.F1-16	3.3.1-25	E, 2

Table 3.3.2-2 Closed Cycle Cooling Water System (Continued)

Component Type	Intended Function	Material	Environment	Aging Effect Requiring Management	Aging Management Programs	NUREG-1801 Vol. 2 Item	Table 1 Item	Notes
Heat Exchanger Components (CS Pump Room Coolers)	Pressure Boundary	Copper Alloy with less than 15% Zinc (Tubes)	Closed Cycle Cooling Water (Internal)	Loss of Material/Pitting, Crevice and Galvanic Corrosion	Closed-Cycle Cooling Water System	VII.C2-4	3.3.1-51	D
Heat Exchanger Components (Control Room Chillers - Condenser)	Heat Transfer	Copper Alloy with less than 15% Zinc (Tubes)	Air/Gas - Dry (External)	None	None	VII.J-4	3.3.1-97	C
Heat Exchanger Components (Control Room Chillers - Condenser)	Heat Transfer	Copper Alloy with less than 15% Zinc (Tubes)	Closed Cycle Cooling Water (Internal)	Reduction of Heat Transfer/Fouling	Closed-Cycle Cooling Water System	VII.C2-2	3.3.1-52	B
Heat Exchanger Components (Control Room Chillers - Condenser)	Pressure Boundary	Carbon Steel (Shell Side Components)	Air - Indoor (External)	Loss of Material/General Corrosion	External Surfaces Monitoring	VII.I-8	3.3.1-58	A
Heat Exchanger Components (Control Room Chillers - Condenser)	Pressure Boundary	Carbon Steel (Shell Side Components)	Air/Gas - Dry (Internal)	None	None	VII.J-23	3.3.1-97	C
Heat Exchanger Components (Control Room Chillers - Condenser)	Pressure Boundary	Carbon Steel (Tube Side Components)	Air - Indoor (External)	Loss of Material/General Corrosion	External Surfaces Monitoring	VII.I-8	3.3.1-58	A
Heat Exchanger Components (Control Room Chillers - Condenser)	Pressure Boundary	Carbon Steel (Tube Side Components)	Closed Cycle Cooling Water (Internal)	Loss of Material/General, Pitting, Crevice and Galvanic Corrosion	Closed-Cycle Cooling Water System	VII.C2-1	3.3.1-48	B

Table 3.3.2-2 Closed Cycle Cooling Water System (Continued)

Component Type	Intended Function	Material	Environment	Aging Effect Requiring Management	Aging Management Programs	NUREG-1801 Vol. 2 Item	Table 1 Item	Notes
Heat Exchanger Components (Control Room Chillers - Condenser)	Pressure Boundary	Carbon Steel (Tubesheet)	Air/Gas - Dry (Internal)	None	None	VII.J-23	3.3.1-97	C
Heat Exchanger Components (Control Room Chillers - Condenser)	Pressure Boundary	Carbon Steel (Tubesheet)	Closed Cycle Cooling Water (Internal)	Loss of Material/General, Pitting, Crevice and Galvanic Corrosion	Closed-Cycle Cooling Water System	VII.C2-1	3.3.1-48	B
Heat Exchanger Components (Control Room Chillers - Condenser)	Pressure Boundary	Copper Alloy with less than 15% Zinc (Tubes)	Air/Gas - Dry (External)	None	None	VII.J-4	3.3.1-97	C
Heat Exchanger Components (Control Room Chillers - Condenser)	Pressure Boundary	Copper Alloy with less than 15% Zinc (Tubes)	Closed Cycle Cooling Water (Internal)	Loss of Material/Pitting, Crevice and Galvanic Corrosion	Closed-Cycle Cooling Water System	VII.C2-4	3.3.1-51	D
Heat Exchanger Components (DG Intercoolers and Injectors)	Heat Transfer	Copper Alloy with less than 15% Zinc (Tubes)	Closed Cycle Cooling Water (External)	Reduction of Heat Transfer/Fouling	Closed-Cycle Cooling Water System	VII.C2-2	3.3.1-52	B
Heat Exchanger Components (DG Intercoolers and Injectors)	Heat Transfer	Copper Alloy with less than 15% Zinc (Tubes)	Closed Cycle Cooling Water (Internal)	Reduction of Heat Transfer/Fouling	Closed-Cycle Cooling Water System	VII.C2-2	3.3.1-52	B
Heat Exchanger Components (DG Intercoolers and Injectors)	Pressure Boundary	Carbon Steel (Shell Side Components)	Air - Indoor (External)	Loss of Material/General Corrosion	External Surfaces Monitoring	VII.I-8	3.3.1-58	A
Heat Exchanger Components (DG Intercoolers and Injectors)	Pressure Boundary	Carbon Steel (Shell Side Components)	Closed Cycle Cooling Water (Internal)	Loss of Material/General, Pitting, Crevice and Galvanic Corrosion	Closed-Cycle Cooling Water System	VII.C2-1	3.3.1-48	B

Table 3.3.2-2 Closed Cycle Cooling Water System (Continued)

Component Type	Intended Function	Material	Environment	Aging Effect Requiring Management	Aging Management Programs	NUREG-1801 Vol. 2 Item	Table 1 Item	Notes
Heat Exchanger Components (DG Intercoolers and Injectors)	Pressure Boundary	Carbon Steel (Tube Side Components)	Air - Indoor (External)	Loss of Material/General Corrosion	External Surfaces Monitoring	VII.I-8	3.3.1-58	A
Heat Exchanger Components (DG Intercoolers and Injectors)	Pressure Boundary	Carbon Steel (Tube Side Components)	Closed Cycle Cooling Water (Internal)	Loss of Material/General, Pitting, Crevice and Galvanic Corrosion	Closed-Cycle Cooling Water System	VII.C2-1	3.3.1-48	B
Heat Exchanger Components (DG Intercoolers and Injectors)	Pressure Boundary	Carbon Steel (Tubesheet)	Closed Cycle Cooling Water (External)	Loss of Material/General, Pitting, Crevice and Galvanic Corrosion	Closed-Cycle Cooling Water System	VII.C2-1	3.3.1-48	B
Heat Exchanger Components (DG Intercoolers and Injectors)	Pressure Boundary	Carbon Steel (Tubesheet)	Closed Cycle Cooling Water (Internal)	Loss of Material/General, Pitting, Crevice and Galvanic Corrosion	Closed-Cycle Cooling Water System	VII.C2-1	3.3.1-48	B
Heat Exchanger Components (DG Intercoolers and Injectors)	Pressure Boundary	Copper Alloy with less than 15% Zinc (Tubes)	Closed Cycle Cooling Water (External)	Loss of Material/Pitting, Crevice and Galvanic Corrosion	Closed-Cycle Cooling Water System	VII.C2-4	3.3.1-51	D
Heat Exchanger Components (DG Intercoolers and Injectors)	Pressure Boundary	Copper Alloy with less than 15% Zinc (Tubes)	Closed Cycle Cooling Water (Internal)	Loss of Material/Pitting, Crevice and Galvanic Corrosion	Closed-Cycle Cooling Water System	VII.C2-4	3.3.1-51	D
Heat Exchanger Components (DG Jacket Water)	Heat Transfer	Copper Alloy with less than 15% Zinc (Tubes)	Closed Cycle Cooling Water (External)	Reduction of Heat Transfer/Fouling	Closed-Cycle Cooling Water System	VII.C2-2	3.3.1-52	B
Heat Exchanger Components (DG Jacket Water)	Heat Transfer	Copper Alloy with less than 15% Zinc (Tubes)	Closed Cycle Cooling Water (Internal)	Reduction of Heat Transfer/Fouling	Closed-Cycle Cooling Water System	VII.C2-2	3.3.1-52	B
Heat Exchanger Components (DG Jacket Water)	Pressure Boundary	Carbon Steel (Shell Side Components)	Air - Indoor (External)	Loss of Material/General Corrosion	External Surfaces Monitoring	VII.I-8	3.3.1-58	A
Heat Exchanger Components (DG Jacket Water)	Pressure Boundary	Carbon Steel (Shell Side Components)	Closed Cycle Cooling Water (Internal)	Loss of Material/General, Pitting, Crevice and Galvanic Corrosion	Closed-Cycle Cooling Water System	VII.C2-1	3.3.1-48	B

Table 3.3.2-2 Closed Cycle Cooling Water System (Continued)

Component Type	Intended Function	Material	Environment	Aging Effect Requiring Management	Aging Management Programs	NUREG-1801 Vol. 2 Item	Table 1 Item	Notes
Heat Exchanger Components (DG Jacket Water)	Pressure Boundary	Carbon Steel (Tube Side Components)	Air - Indoor (External)	Loss of Material/General Corrosion	External Surfaces Monitoring	VII.I-8	3.3.1-58	A
Heat Exchanger Components (DG Jacket Water)	Pressure Boundary	Carbon Steel (Tube Side Components)	Closed Cycle Cooling Water (Internal)	Loss of Material/General, Pitting, Crevice and Galvanic Corrosion	Closed-Cycle Cooling Water System	VII.C2-1	3.3.1-48	B
Heat Exchanger Components (DG Jacket Water)	Pressure Boundary	Carbon Steel (Tubesheet)	Closed Cycle Cooling Water (External)	Loss of Material/General, Pitting, Crevice and Galvanic Corrosion	Closed-Cycle Cooling Water System	VII.C2-1	3.3.1-48	B
Heat Exchanger Components (DG Jacket Water)	Pressure Boundary	Carbon Steel (Tubesheet)	Closed Cycle Cooling Water (Internal)	Loss of Material/General, Pitting, Crevice and Galvanic Corrosion	Closed-Cycle Cooling Water System	VII.C2-1	3.3.1-48	B
Heat Exchanger Components (DG Jacket Water)	Pressure Boundary	Copper Alloy with less than 15% Zinc (Tubes)	Closed Cycle Cooling Water (External)	Loss of Material/Pitting, Crevice and Galvanic Corrosion	Closed-Cycle Cooling Water System	VII.C2-4	3.3.1-51	D
Heat Exchanger Components (DG Jacket Water)	Pressure Boundary	Copper Alloy with less than 15% Zinc (Tubes)	Closed Cycle Cooling Water (Internal)	Loss of Material/Pitting, Crevice and Galvanic Corrosion	Closed-Cycle Cooling Water System	VII.C2-4	3.3.1-51	D
Heat Exchanger Components (DG Lube Oil)	Heat Transfer	Copper Alloy with less than 15% Zinc (Tubes)	Closed Cycle Cooling Water (Internal)	Reduction of Heat Transfer/Fouling	Closed-Cycle Cooling Water System	VII.C2-2	3.3.1-52	B
Heat Exchanger Components (DG Lube Oil)	Heat Transfer	Copper Alloy with less than 15% Zinc (Tubes)	Lubricating Oil (External)	Reduction of Heat Transfer/Fouling	Lubricating Oil Analysis	V.D2-9	3.2.1-9	B
Heat Exchanger Components (DG Lube Oil)	Heat Transfer	Copper Alloy with less than 15% Zinc (Tubes)	Lubricating Oil (External)	Reduction of Heat Transfer/Fouling	One-Time Inspection	V.D2-9	3.2.1-9	A
Heat Exchanger Components (DG Lube Oil)	Pressure Boundary	Carbon Steel (Shell Side Components)	Air - Indoor (External)	Loss of Material/General Corrosion	External Surfaces Monitoring	VII.I-8	3.3.1-58	A
Heat Exchanger Components (DG Lube Oil)	Pressure Boundary	Carbon Steel (Shell Side Components)	Lubricating Oil (Internal)	Loss of Material/General, Pitting and Crevice Corrosion	Lubricating Oil Analysis	VII.H2-5	3.3.1-21	B, 3

Table 3.3.2-2 Closed Cycle Cooling Water System (Continued)

Component Type	Intended Function	Material	Environment	Aging Effect Requiring Management	Aging Management Programs	NUREG-1801 Vol. 2 Item	Table 1 Item	Notes
Heat Exchanger Components (DG Lube Oil)	Pressure Boundary	Carbon Steel (Shell Side Components)	Lubricating Oil (Internal)	Loss of Material/General, Pitting and Crevice Corrosion	One-Time Inspection	VII.H2-5	3.3.1-21	A, 3
Heat Exchanger Components (DG Lube Oil)	Pressure Boundary	Carbon Steel (Tube Side Components)	Air - Indoor (External)	Loss of Material/General Corrosion	External Surfaces Monitoring	VII.I-8	3.3.1-58	A
Heat Exchanger Components (DG Lube Oil)	Pressure Boundary	Carbon Steel (Tube Side Components)	Closed Cycle Cooling Water (Internal)	Loss of Material/General, Pitting, Crevice and Galvanic Corrosion	Closed-Cycle Cooling Water System	VII.C2-1	3.3.1-48	B
Heat Exchanger Components (DG Lube Oil)	Pressure Boundary	Copper Alloy with 15% Zinc or More (Tubesheets)	Closed Cycle Cooling Water (Internal)	Loss of Material/Pitting, Crevice and Galvanic Corrosion	Closed-Cycle Cooling Water System	VII.C2-4	3.3.1-51	D
Heat Exchanger Components (DG Lube Oil)	Pressure Boundary	Copper Alloy with 15% Zinc or More (Tubesheets)	Closed Cycle Cooling Water (Internal)	Loss of Material/Selective Leaching	Selective Leaching of Materials	VII.C2-6	3.3.1-84	C
Heat Exchanger Components (DG Lube Oil)	Pressure Boundary	Copper Alloy with 15% Zinc or More (Tubesheets)	Lubricating Oil (Internal)	Loss of Material/Pitting and Crevice Corrosion	Lubricating Oil Analysis	VII.H2-10	3.3.1-26	B
Heat Exchanger Components (DG Lube Oil)	Pressure Boundary	Copper Alloy with 15% Zinc or More (Tubesheets)	Lubricating Oil (Internal)	Loss of Material/Pitting and Crevice Corrosion	One-Time Inspection	VII.H2-10	3.3.1-26	A
Heat Exchanger Components (DG Lube Oil)	Pressure Boundary	Copper Alloy with less than 15% Zinc (Tubes)	Closed Cycle Cooling Water (Internal)	Loss of Material/Pitting, Crevice and Galvanic Corrosion	Closed-Cycle Cooling Water System	VII.C2-4	3.3.1-51	D
Heat Exchanger Components (DG Lube Oil)	Pressure Boundary	Copper Alloy with less than 15% Zinc (Tubes)	Lubricating Oil (External)	Loss of Material/Pitting and Crevice Corrosion	Lubricating Oil Analysis	VII.H2-10	3.3.1-26	B
Heat Exchanger Components (DG Lube Oil)	Pressure Boundary	Copper Alloy with less than 15% Zinc (Tubes)	Lubricating Oil (External)	Loss of Material/Pitting and Crevice Corrosion	One-Time Inspection	VII.H2-10	3.3.1-26	A
Heat Exchanger Components (DG Room Coolers)	Heat Transfer	Copper Alloy with less than 15% Zinc (Tubes and Fins)	Air/Gas - Wetted (External)	Reduction of Heat Transfer/Fouling	Periodic Inspection			H, 1

Table 3.3.2-2 Closed Cycle Cooling Water System (Continued)

Component Type	Intended Function	Material	Environment	Aging Effect Requiring Management	Aging Management Programs	NUREG-1801 Vol. 2 Item	Table 1 Item	Notes
Heat Exchanger Components (DG Room Coolers)	Heat Transfer	Copper Alloy with less than 15% Zinc (Tubes and Fins)	Closed Cycle Cooling Water (Internal)	Reduction of Heat Transfer/Fouling	Closed-Cycle Cooling Water System	VII.C2-2	3.3.1-52	B
Heat Exchanger Components (DG Room Coolers)	Pressure Boundary	Carbon Steel (Tube Side Components)	Air - Indoor (External)	Loss of Material/General Corrosion	External Surfaces Monitoring	VII.I-8	3.3.1-58	A
Heat Exchanger Components (DG Room Coolers)	Pressure Boundary	Carbon Steel (Tube Side Components)	Closed Cycle Cooling Water (Internal)	Loss of Material/General, Pitting, Crevice and Galvanic Corrosion	Closed-Cycle Cooling Water System	VII.C2-1	3.3.1-48	B
Heat Exchanger Components (DG Room Coolers)	Pressure Boundary	Copper Alloy with less than 15% Zinc (Tubes)	Air/Gas - Wetted (External)	Loss of Material/Pitting and Crevice Corrosion	Periodic Inspection	VII.F1-16	3.3.1-25	E, 2
Heat Exchanger Components (DG Room Coolers)	Pressure Boundary	Copper Alloy with less than 15% Zinc (Tubes)	Closed Cycle Cooling Water (Internal)	Loss of Material/Pitting, Crevice and Galvanic Corrosion	Closed-Cycle Cooling Water System	VII.C2-4	3.3.1-51	D
Heat Exchanger Components (FRVS Cooling Coils)	Heat Transfer	Copper Alloy with less than 15% Zinc (Tubes and Fins)	Air/Gas - Wetted (External)	Reduction of Heat Transfer/Fouling	Periodic Inspection			H, 1
Heat Exchanger Components (FRVS Cooling Coils)	Heat Transfer	Copper Alloy with less than 15% Zinc (Tubes and Fins)	Closed Cycle Cooling Water (Internal)	Reduction of Heat Transfer/Fouling	Closed-Cycle Cooling Water System	VII.C2-2	3.3.1-52	B
Heat Exchanger Components (FRVS Cooling Coils)	Pressure Boundary	Copper Alloy with less than 15% Zinc (Tubes)	Air/Gas - Wetted (External)	Loss of Material/Pitting and Crevice Corrosion	Periodic Inspection	VII.F1-16	3.3.1-25	E, 2
Heat Exchanger Components (FRVS Cooling Coils)	Pressure Boundary	Copper Alloy with less than 15% Zinc (Tubes)	Closed Cycle Cooling Water (Internal)	Loss of Material/Pitting, Crevice and Galvanic Corrosion	Closed-Cycle Cooling Water System	VII.C2-4	3.3.1-51	D
Heat Exchanger Components (Fuel Pool Cooling)	Heat Transfer	Stainless Steel (Plates)	Closed Cycle Cooling Water (External)	Reduction of Heat Transfer/Fouling	Closed-Cycle Cooling Water System	VII.C2-3	3.3.1-52	D

Table 3.3.2-2 Closed Cycle Cooling Water System (Continued)

Component Type	Intended Function	Material	Environment	Aging Effect Requiring Management	Aging Management Programs	NUREG-1801 Vol. 2 Item	Table 1 Item	Notes
Heat Exchanger Components (Fuel Pool Cooling)	Heat Transfer	Stainless Steel (Plates)	Treated Water (Internal)	Reduction of Heat Transfer/Fouling	One-Time Inspection	VII.A4-4	3.3.1-3	A
Heat Exchanger Components (Fuel Pool Cooling)	Heat Transfer	Stainless Steel (Plates)	Treated Water (Internal)	Reduction of Heat Transfer/Fouling	Water Chemistry	VII.A4-4	3.3.1-3	B
Heat Exchanger Components (Fuel Pool Cooling)	Pressure Boundary	Carbon Steel (Covers)	Air - Indoor (External)	Loss of Material/General Corrosion	External Surfaces Monitoring	VII.I-8	3.3.1-58	A
Heat Exchanger Components (Fuel Pool Cooling)	Pressure Boundary	Carbon Steel (Covers)	Closed Cycle Cooling Water (Internal)	Loss of Material/General, Pitting, Crevice and Galvanic Corrosion	Closed-Cycle Cooling Water System	VII.C2-1	3.3.1-48	B
Heat Exchanger Components (Fuel Pool Cooling)	Pressure Boundary	Carbon Steel (Covers)	Treated Water (Internal)	Loss of Material/General, Pitting, Crevice and Galvanic Corrosion	One-Time Inspection	VIII.E-7	3.4.1-5	A
Heat Exchanger Components (Fuel Pool Cooling)	Pressure Boundary	Carbon Steel (Covers)	Treated Water (Internal)	Loss of Material/General, Pitting, Crevice and Galvanic Corrosion	Water Chemistry	VIII.E-7	3.4.1-5	B
Heat Exchanger Components (Fuel Pool Cooling)	Pressure Boundary	Stainless Steel (Nozzles)	Air - Indoor (External)	None	None	VII.J-15	3.3.1-94	C
Heat Exchanger Components (Fuel Pool Cooling)	Pressure Boundary	Stainless Steel (Nozzles)	Closed Cycle Cooling Water (Internal)	Loss of Material/Pitting and Crevice Corrosion	Closed-Cycle Cooling Water System	VII.C2-10	3.3.1-50	D
Heat Exchanger Components (Fuel Pool Cooling)	Pressure Boundary	Stainless Steel (Nozzles)	Treated Water (Internal)	Loss of Material/Pitting and Crevice Corrosion	One-Time Inspection	VII.A4-2	3.3.1-23	A
Heat Exchanger Components (Fuel Pool Cooling)	Pressure Boundary	Stainless Steel (Nozzles)	Treated Water (Internal)	Loss of Material/Pitting and Crevice Corrosion	Water Chemistry	VII.A4-2	3.3.1-23	B
Heat Exchanger Components (Fuel Pool Cooling)	Pressure Boundary	Stainless Steel (Plates)	Air - Indoor (External)	None	None	VII.J-15	3.3.1-94	C

Table 3.3.2-2 Closed Cycle Cooling Water System (Continued)

Component Type	Intended Function	Material	Environment	Aging Effect Requiring Management	Aging Management Programs	NUREG-1801 Vol. 2 Item	Table 1 Item	Notes
Heat Exchanger Components (Fuel Pool Cooling)	Pressure Boundary	Stainless Steel (Plates)	Closed Cycle Cooling Water (External)	Loss of Material/Pitting and Crevice Corrosion	Closed-Cycle Cooling Water System	VII.C2-10	3.3.1-50	D
Heat Exchanger Components (Fuel Pool Cooling)	Pressure Boundary	Stainless Steel (Plates)	Treated Water (Internal)	Loss of Material/Pitting and Crevice Corrosion	One-Time Inspection	VII.A4-2	3.3.1-23	A
Heat Exchanger Components (Fuel Pool Cooling)	Pressure Boundary	Stainless Steel (Plates)	Treated Water (Internal)	Loss of Material/Pitting and Crevice Corrosion	Water Chemistry	VII.A4-2	3.3.1-23	B
Heat Exchanger Components (Fuel Pool Cooling)	Structural Support	Carbon Steel (Carrying Bars)	Air - Indoor (External)	Loss of Material/General Corrosion	External Surfaces Monitoring	VII.I-8	3.3.1-58	A
Heat Exchanger Components (Fuel Pool Cooling)	Structural Support	Stainless Steel (Carrying Bars)	Air - Indoor (External)	None	None	VII.J-15	3.3.1-94	C
Heat Exchanger Components (HPCI Pump Room Cooler)	Heat Transfer	Copper Alloy with less than 15% Zinc (Tubes and Fins)	Air/Gas - Wetted (External)	Reduction of Heat Transfer/Fouling	Periodic Inspection			H, 1
Heat Exchanger Components (HPCI Pump Room Cooler)	Heat Transfer	Copper Alloy with less than 15% Zinc (Tubes and Fins)	Closed Cycle Cooling Water (Internal)	Reduction of Heat Transfer/Fouling	Closed-Cycle Cooling Water System	VII.C2-2	3.3.1-52	B
Heat Exchanger Components (HPCI Pump Room Cooler)	Pressure Boundary	Copper Alloy with less than 15% Zinc (Tubes)	Air/Gas - Wetted (External)	Loss of Material/Pitting and Crevice Corrosion	Periodic Inspection	VII.F1-16	3.3.1-25	E, 2
Heat Exchanger Components (HPCI Pump Room Cooler)	Pressure Boundary	Copper Alloy with less than 15% Zinc (Tubes)	Closed Cycle Cooling Water (Internal)	Loss of Material/Pitting, Crevice and Galvanic Corrosion	Closed-Cycle Cooling Water System	VII.C2-4	3.3.1-51	D
Heat Exchanger Components (PCIG Compressor Inter & After coolers)	Heat Transfer	Stainless Steel (Tubes)	Air/Gas - Dry (Internal)	None	None	VII.J-19	3.3.1-97	C

Table 3.3.2-2 Closed Cycle Cooling Water System (Continued)

Component Type	Intended Function	Material	Environment	Aging Effect Requiring Management	Aging Management Programs	NUREG-1801 Vol. 2 Item	Table 1 Item	Notes
Heat Exchanger Components (PCIG Compressor Inter & After coolers)	Heat Transfer	Stainless Steel (Tubes)	Closed Cycle Cooling Water (External)	Reduction of Heat Transfer/Fouling	Closed-Cycle Cooling Water System	VII.C2-3	3.3.1-52	B
Heat Exchanger Components (PCIG Compressor Inter & After coolers)	Pressure Boundary	Stainless Steel (Shell Side Components)	Air - Indoor (External)	None	None	VII.J-15	3.3.1-94	C
Heat Exchanger Components (PCIG Compressor Inter & After coolers)	Pressure Boundary	Stainless Steel (Shell Side Components)	Closed Cycle Cooling Water (Internal)	Loss of Material/Pitting and Crevice Corrosion	Closed-Cycle Cooling Water System	VII.C2-10	3.3.1-50	D
Heat Exchanger Components (PCIG Compressor Inter & After coolers)	Pressure Boundary	Stainless Steel (Tube Side Components)	Air - Indoor (External)	None	None	VII.J-15	3.3.1-94	C
Heat Exchanger Components (PCIG Compressor Inter & After coolers)	Pressure Boundary	Stainless Steel (Tube Side Components)	Air/Gas - Dry (Internal)	None	None	VII.J-19	3.3.1-97	C
Heat Exchanger Components (PCIG Compressor Inter & After coolers)	Pressure Boundary	Stainless Steel (Tubes)	Air/Gas - Dry (Internal)	None	None	VII.J-19	3.3.1-97	C
Heat Exchanger Components (PCIG Compressor Inter & After coolers)	Pressure Boundary	Stainless Steel (Tubes)	Closed Cycle Cooling Water (External)	Loss of Material/Pitting and Crevice Corrosion	Closed-Cycle Cooling Water System	VII.C2-10	3.3.1-50	D
Heat Exchanger Components (PCIG Compressor Inter & After coolers)	Pressure Boundary	Stainless Steel (Tubesheet)	Air/Gas - Dry (Internal)	None	None	VII.J-19	3.3.1-97	C
Heat Exchanger Components (PCIG Compressor Inter & After coolers)	Pressure Boundary	Stainless Steel (Tubesheet)	Closed Cycle Cooling Water (Internal)	Loss of Material/Pitting and Crevice Corrosion	Closed-Cycle Cooling Water System	VII.C2-10	3.3.1-50	D

Table 3.3.2-2 Closed Cycle Cooling Water System (Continued)

Component Type	Intended Function	Material	Environment	Aging Effect Requiring Management	Aging Management Programs	NUREG-1801 Vol. 2 Item	Table 1 Item	Notes
Heat Exchanger Components (RACS)	Leakage Boundary	Carbon Steel (Shell Side Components)	Air - Indoor (External)	Loss of Material/General Corrosion	External Surfaces Monitoring	VII.I-8	3.3.1-58	A
Heat Exchanger Components (RACS)	Leakage Boundary	Carbon Steel (Shell Side Components)	Closed Cycle Cooling Water (Internal)	Loss of Material/General, Pitting, Crevice and Galvanic Corrosion	Closed-Cycle Cooling Water System	VII.C2-1	3.3.1-48	B
Heat Exchanger Components (RCIC Pump Room Coolers)	Heat Transfer	Copper Alloy with less than 15% Zinc (Tubes and Fins)	Air/Gas - Wetted (External)	Reduction of Heat Transfer/Fouling	Periodic Inspection			H, 1
Heat Exchanger Components (RCIC Pump Room Coolers)	Heat Transfer	Copper Alloy with less than 15% Zinc (Tubes and Fins)	Closed Cycle Cooling Water (Internal)	Reduction of Heat Transfer/Fouling	Closed-Cycle Cooling Water System	VII.C2-2	3.3.1-52	B
Heat Exchanger Components (RCIC Pump Room Coolers)	Pressure Boundary	Copper Alloy with less than 15% Zinc (Tubes)	Air/Gas - Wetted (External)	Loss of Material/Pitting and Crevice Corrosion	Periodic Inspection	VII.F1-16	3.3.1-25	E, 2
Heat Exchanger Components (RCIC Pump Room Coolers)	Pressure Boundary	Copper Alloy with less than 15% Zinc (Tubes)	Closed Cycle Cooling Water (Internal)	Loss of Material/Pitting, Crevice and Galvanic Corrosion	Closed-Cycle Cooling Water System	VII.C2-4	3.3.1-51	D
Heat Exchanger Components (RHR Pump Motor Bearing Cooler)	Heat Transfer	Copper Alloy with less than 15% Zinc (Tubes)	Closed Cycle Cooling Water (Internal)	Reduction of Heat Transfer/Fouling	Closed-Cycle Cooling Water System	VII.C2-2	3.3.1-52	B
Heat Exchanger Components (RHR Pump Motor Bearing Cooler)	Heat Transfer	Copper Alloy with less than 15% Zinc (Tubes)	Lubricating Oil (External)	Reduction of Heat Transfer/Fouling	Lubricating Oil Analysis	V.D2-9	3.2.1-9	B
Heat Exchanger Components (RHR Pump Motor Bearing Cooler)	Heat Transfer	Copper Alloy with less than 15% Zinc (Tubes)	Lubricating Oil (External)	Reduction of Heat Transfer/Fouling	One-Time Inspection	V.D2-9	3.2.1-9	A

Table 3.3.2-2 Closed Cycle Cooling Water System (Continued)

Component Type	Intended Function	Material	Environment	Aging Effect Requiring Management	Aging Management Programs	NUREG-1801 Vol. 2 Item	Table 1 Item	Notes
Heat Exchanger Components (RHR Pump Motor Bearing Cooler)	Pressure Boundary	Copper Alloy with less than 15% Zinc (Tubes)	Closed Cycle Cooling Water (Internal)	Loss of Material/Pitting, Crevice and Galvanic Corrosion	Closed-Cycle Cooling Water System	VII.C2-4	3.3.1-51	D
Heat Exchanger Components (RHR Pump Motor Bearing Cooler)	Pressure Boundary	Copper Alloy with less than 15% Zinc (Tubes)	Lubricating Oil (External)	Loss of Material/Pitting and Crevice Corrosion	Lubricating Oil Analysis	VII.H2-10	3.3.1-26	B
Heat Exchanger Components (RHR Pump Motor Bearing Cooler)	Pressure Boundary	Copper Alloy with less than 15% Zinc (Tubes)	Lubricating Oil (External)	Loss of Material/Pitting and Crevice Corrosion	One-Time Inspection	VII.H2-10	3.3.1-26	A
Heat Exchanger Components (RHR Pump Room Coolers)	Heat Transfer	Copper Alloy with less than 15% Zinc (Tubes and Fins)	Air/Gas - Wetted (External)	Reduction of Heat Transfer/Fouling	Periodic Inspection			H, 1
Heat Exchanger Components (RHR Pump Room Coolers)	Heat Transfer	Copper Alloy with less than 15% Zinc (Tubes and Fins)	Closed Cycle Cooling Water (Internal)	Reduction of Heat Transfer/Fouling	Closed-Cycle Cooling Water System	VII.C2-2	3.3.1-52	B
Heat Exchanger Components (RHR Pump Room Coolers)	Pressure Boundary	Copper Alloy with less than 15% Zinc (Tubes)	Air/Gas - Wetted (External)	Loss of Material/Pitting and Crevice Corrosion	Periodic Inspection	VII.F1-16	3.3.1-25	E, 2
Heat Exchanger Components (RHR Pump Room Coolers)	Pressure Boundary	Copper Alloy with less than 15% Zinc (Tubes)	Closed Cycle Cooling Water (Internal)	Loss of Material/Pitting, Crevice and Galvanic Corrosion	Closed-Cycle Cooling Water System	VII.C2-4	3.3.1-51	D
Heat Exchanger Components (RHR Pump Seal Cooler)	Heat Transfer	Stainless Steel (Tubes)	Closed Cycle Cooling Water (External)	Reduction of Heat Transfer/Fouling	Closed-Cycle Cooling Water System	VII.C2-3	3.3.1-52	B
Heat Exchanger Components (RHR Pump Seal Cooler)	Heat Transfer	Stainless Steel (Tubes)	Treated Water (Internal)	Reduction of Heat Transfer/Fouling	One-Time Inspection	VII.A4-4	3.3.1-3	A

Table 3.3.2-2 Closed Cycle Cooling Water System (Continued)

Component Type	Intended Function	Material	Environment	Aging Effect Requiring Management	Aging Management Programs	NUREG-1801 Vol. 2 Item	Table 1 Item	Notes
Heat Exchanger Components (RHR Pump Seal Cooler)	Heat Transfer	Stainless Steel (Tubes)	Treated Water (Internal)	Reduction of Heat Transfer/Fouling	Water Chemistry	VII.A4-4	3.3.1-3	B
Heat Exchanger Components (RHR Pump Seal Cooler)	Pressure Boundary	Gray Cast Iron (Shell Side Components)	Air - Indoor (External)	Loss of Material/General Corrosion	External Surfaces Monitoring	VII.I-8	3.3.1-58	A
Heat Exchanger Components (RHR Pump Seal Cooler)	Pressure Boundary	Gray Cast Iron (Shell Side Components)	Closed Cycle Cooling Water (Internal)	Loss of Material/General, Pitting, Crevice and Galvanic Corrosion	Closed-Cycle Cooling Water System	VII.C2-1	3.3.1-48	B
Heat Exchanger Components (RHR Pump Seal Cooler)	Pressure Boundary	Gray Cast Iron (Shell Side Components)	Closed Cycle Cooling Water (Internal)	Loss of Material/Selective Leaching	Selective Leaching of Materials	VII.C2-8	3.3.1-85	C
Heat Exchanger Components (RHR Pump Seal Cooler)	Pressure Boundary	Stainless Steel (Tubes)	Closed Cycle Cooling Water (External)	Loss of Material/Pitting and Crevice Corrosion	Closed-Cycle Cooling Water System	VII.C2-10	3.3.1-50	D
Heat Exchanger Components (RHR Pump Seal Cooler)	Pressure Boundary	Stainless Steel (Tubes)	Treated Water (Internal)	Loss of Material/Pitting and Crevice Corrosion	One-Time Inspection	VII.A4-2	3.3.1-23	A
Heat Exchanger Components (RHR Pump Seal Cooler)	Pressure Boundary	Stainless Steel (Tubes)	Treated Water (Internal)	Loss of Material/Pitting and Crevice Corrosion	Water Chemistry	VII.A4-2	3.3.1-23	B
Heat Exchanger Components (RHR)	Heat Transfer	Stainless Steel (Tubes)	Closed Cycle Cooling Water (Internal)	Reduction of Heat Transfer/Fouling	Closed-Cycle Cooling Water System	VII.C2-3	3.3.1-52	B
Heat Exchanger Components (RHR)	Heat Transfer	Stainless Steel (Tubes)	Treated Water (External)	Reduction of Heat Transfer/Fouling	One-Time Inspection	VII.A4-4	3.3.1-3	A
Heat Exchanger Components (RHR)	Heat Transfer	Stainless Steel (Tubes)	Treated Water (External)	Reduction of Heat Transfer/Fouling	Water Chemistry	VII.A4-4	3.3.1-3	B
Heat Exchanger Components (RHR)	Pressure Boundary	Carbon Steel (Shell Side Components)	Air - Indoor (External)	Loss of Material/General Corrosion	External Surfaces Monitoring	VII.I-8	3.3.1-58	A

Table 3.3.2-2 Closed Cycle Cooling Water System (Continued)

Component Type	Intended Function	Material	Environment	Aging Effect Requiring Management	Aging Management Programs	NUREG-1801 Vol. 2 Item	Table 1 Item	Notes
Heat Exchanger Components (RHR)	Pressure Boundary	Carbon Steel (Shell Side Components)	Closed Cycle Cooling Water (Internal)	Loss of Material/General, Pitting, Crevice and Galvanic Corrosion	Closed-Cycle Cooling Water System	VII.C2-1	3.3.1-48	B
Heat Exchanger Components (RHR)	Pressure Boundary	Carbon Steel (Tube Side Components)	Air - Indoor (External)	Loss of Material/General Corrosion	External Surfaces Monitoring	VII.I-8	3.3.1-58	A
Heat Exchanger Components (RHR)	Pressure Boundary	Carbon Steel (Tube Side Components)	Closed Cycle Cooling Water (Internal)	Loss of Material/General, Pitting, Crevice and Galvanic Corrosion	Closed-Cycle Cooling Water System	VII.C2-1	3.3.1-48	B
Heat Exchanger Components (RHR)	Pressure Boundary	Carbon Steel (Tubesheet)	Closed Cycle Cooling Water (Internal)	Loss of Material/General, Pitting, Crevice and Galvanic Corrosion	Closed-Cycle Cooling Water System	VII.C2-1	3.3.1-48	B
Heat Exchanger Components (RHR)	Pressure Boundary	Carbon Steel (Tubesheet)	Treated Water (Internal)	Loss of Material/General, Pitting, Crevice and Galvanic Corrosion	One-Time Inspection	VIII.E-7	3.4.1-5	A
Heat Exchanger Components (RHR)	Pressure Boundary	Carbon Steel (Tubesheet)	Treated Water (Internal)	Loss of Material/General, Pitting, Crevice and Galvanic Corrosion	Water Chemistry	VIII.E-7	3.4.1-5	B
Heat Exchanger Components (RHR)	Pressure Boundary	Stainless Steel (Tubes)	Closed Cycle Cooling Water (Internal)	Loss of Material/Pitting and Crevice Corrosion	Closed-Cycle Cooling Water System	VII.C2-10	3.3.1-50	D
Heat Exchanger Components (RHR)	Pressure Boundary	Stainless Steel (Tubes)	Treated Water (External)	Loss of Material/Pitting and Crevice Corrosion	One-Time Inspection	VII.A4-2	3.3.1-23	A
Heat Exchanger Components (RHR)	Pressure Boundary	Stainless Steel (Tubes)	Treated Water (External)	Loss of Material/Pitting and Crevice Corrosion	Water Chemistry	VII.A4-2	3.3.1-23	B
Heat Exchanger Components (RWCU Non-Regen)	Leakage Boundary	Carbon Steel (Shell Side Components)	Air - Indoor (External)	Loss of Material/General Corrosion	External Surfaces Monitoring	VII.I-8	3.3.1-58	A
Heat Exchanger Components (RWCU Non-Regen)	Leakage Boundary	Carbon Steel (Shell Side Components)	Closed Cycle Cooling Water (Internal)	Loss of Material/General, Pitting, Crevice and Galvanic Corrosion	Closed-Cycle Cooling Water System	VII.C2-1	3.3.1-48	B

Table 3.3.2-2 Closed Cycle Cooling Water System (Continued)

Component Type	Intended Function	Material	Environment	Aging Effect Requiring Management	Aging Management Programs	NUREG-1801 Vol. 2 Item	Table 1 Item	Notes
Heat Exchanger Components (RWCU Pedestal)	Leakage Boundary	Carbon Steel (Shell)	Air - Indoor (External)	Loss of Material/General Corrosion	External Surfaces Monitoring	VII.I-8	3.3.1-58	A
Heat Exchanger Components (RWCU Pedestal)	Leakage Boundary	Carbon Steel (Shell)	Closed Cycle Cooling Water (Internal)	Loss of Material/General, Pitting, Crevice and Galvanic Corrosion	Closed-Cycle Cooling Water System	VII.C2-1	3.3.1-48	B
Heat Exchanger Components (RWCU Pump HX)	Leakage Boundary	Carbon Steel (Shell)	Air - Indoor (External)	Loss of Material/General Corrosion	External Surfaces Monitoring	VII.I-8	3.3.1-58	A
Heat Exchanger Components (RWCU Pump HX)	Leakage Boundary	Carbon Steel (Shell)	Closed Cycle Cooling Water (Internal)	Loss of Material/General, Pitting, Crevice and Galvanic Corrosion	Closed-Cycle Cooling Water System	VII.C2-1	3.3.1-48	B
Heat Exchanger Components (SACS)	Evaluated with the Service Water System	Not Applicable	Not Applicable	Not Applicable	Not Applicable			
Heat Exchanger Components (Thermo-siphon)	Heat Transfer	Copper Alloy with less than 15% Zinc (Tubes)	Closed Cycle Cooling Water (Internal)	Reduction of Heat Transfer/Fouling	Closed-Cycle Cooling Water System	VII.C2-2	3.3.1-52	B
Heat Exchanger Components (Thermo-siphon)	Heat Transfer	Copper Alloy with less than 15% Zinc (Tubes)	Raw Water (External)	Reduction of Heat Transfer/Fouling	Periodic Inspection			G, 4
Heat Exchanger Components (Thermo-siphon)	Pressure Boundary	Copper Alloy with less than 15% Zinc (Tubes)	Closed Cycle Cooling Water (Internal)	Loss of Material/Pitting, Crevice and Galvanic Corrosion	Closed-Cycle Cooling Water System	VII.C2-4	3.3.1-51	D
Heat Exchanger Components (Thermo-siphon)	Pressure Boundary	Copper Alloy with less than 15% Zinc (Tubes)	Raw Water (External)	Loss of Material/Pitting, Crevice, and Microbiologically Influenced Corrosion	Periodic Inspection			G, 4
Piping and Fittings	Leakage Boundary	Carbon Steel	Air - Indoor (External)	Loss of Material/General Corrosion	External Surfaces Monitoring	VII.D-3	3.3.1-57	A
Piping and Fittings	Leakage Boundary	Carbon Steel	Closed Cycle Cooling Water (Internal)	Loss of Material/General, Pitting, Crevice and Galvanic Corrosion	Closed-Cycle Cooling Water System	VII.C2-1	3.3.1-48	D
Piping and Fittings	Leakage Boundary	Stainless Steel	Air - Indoor (External)	None	None	VII.J-15	3.3.1-94	A

Table 3.3.2-2 Closed Cycle Cooling Water System (Continued)

Component Type	Intended Function	Material	Environment	Aging Effect Requiring Management	Aging Management Programs	NUREG-1801 Vol. 2 Item	Table 1 Item	Notes
Piping and Fittings	Leakage Boundary	Stainless Steel	Closed Cycle Cooling Water (Internal)	Loss of Material/Pitting and Crevice Corrosion	Closed-Cycle Cooling Water System	VII.C2-10	3.3.1-50	B
Piping and Fittings	Pressure Boundary	Carbon Steel	Air - Indoor (External)	Loss of Material/General Corrosion	External Surfaces Monitoring	VII.D-3	3.3.1-57	A
Piping and Fittings	Pressure Boundary	Carbon Steel	Closed Cycle Cooling Water (Internal)	Loss of Material/General, Pitting, Crevice and Galvanic Corrosion	Closed-Cycle Cooling Water System	VII.C2-1	3.3.1-48	D
Piping and Fittings	Pressure Boundary	Stainless Steel	Air - Indoor (External)	None	None	VII.J-15	3.3.1-94	A
Piping and Fittings	Pressure Boundary	Stainless Steel	Air/Gas - Dry (Internal)	None	None	VII.J-19	3.3.1-97	A
Piping and Fittings	Pressure Boundary	Stainless Steel	Closed Cycle Cooling Water (Internal)	Loss of Material/Pitting and Crevice Corrosion	Closed-Cycle Cooling Water System	VII.C2-10	3.3.1-50	B
Piping and Fittings	Structural Support	Carbon Steel	Air - Indoor (External)	Loss of Material/General Corrosion	External Surfaces Monitoring	VII.D-3	3.3.1-57	A
Piping and Fittings	Structural Support	Carbon Steel	Air/Gas - Dry (Internal)	None	None	VII.J-23	3.3.1-97	A
Piping and Fittings	Structural Support	Carbon Steel	Closed Cycle Cooling Water (Internal)	Loss of Material/General, Pitting and Crevice Corrosion	Closed-Cycle Cooling Water System	VII.C2-14	3.3.1-47	B
Pump Casing (RACS)	Leakage Boundary	Gray Cast Iron	Air - Indoor (External)	Loss of Material/General Corrosion	External Surfaces Monitoring	VII.D-3	3.3.1-57	A
Pump Casing (RACS)	Leakage Boundary	Gray Cast Iron	Closed Cycle Cooling Water (Internal)	Loss of Material/General, Pitting and Crevice Corrosion	Closed-Cycle Cooling Water System	VII.C2-14	3.3.1-47	B
Pump Casing (RACS)	Leakage Boundary	Gray Cast Iron	Closed Cycle Cooling Water (Internal)	Loss of Material/Selective Leaching	Selective Leaching of Materials	VII.C2-8	3.3.1-85	A
Pump Casing (SACS)	Pressure Boundary	Carbon Steel	Air - Indoor (External)	Loss of Material/General Corrosion	External Surfaces Monitoring	VII.D-3	3.3.1-57	A
Pump Casing (SACS)	Pressure Boundary	Carbon Steel	Closed Cycle Cooling Water (Internal)	Loss of Material/General, Pitting and Crevice Corrosion	Closed-Cycle Cooling Water System	VII.C2-14	3.3.1-47	B
Restricting Orifices	Pressure Boundary	Stainless Steel	Air - Indoor (External)	None	None	VII.J-15	3.3.1-94	A
Restricting Orifices	Pressure Boundary	Stainless Steel	Closed Cycle Cooling Water (Internal)	Loss of Material/Pitting and Crevice Corrosion	Closed-Cycle Cooling Water System	VII.C2-10	3.3.1-50	B
Restricting Orifices	Throttle	Stainless Steel	Air - Indoor (External)	None	None	VII.J-15	3.3.1-94	A

Table 3.3.2-2 Closed Cycle Cooling Water System (Continued)

Component Type	Intended Function	Material	Environment	Aging Effect Requiring Management	Aging Management Programs	NUREG-1801 Vol. 2 Item	Table 1 Item	Notes
Restricting Orifices	Throttle	Stainless Steel	Closed Cycle Cooling Water (Internal)	Loss of Material/Pitting and Crevice Corrosion	Closed-Cycle Cooling Water System	VII.C2-10	3.3.1-50	B
Sensor Element	Leakage Boundary	Aluminum	Air - Indoor (External)	None	None	V.F-2	3.2.1-50	A
Sensor Element	Leakage Boundary	Aluminum	Closed Cycle Cooling Water (Internal)	Loss of Material/Pitting and Crevice Corrosion	Closed-Cycle Cooling Water System			G
Sensor Element	Pressure Boundary	Stainless Steel	Air - Indoor (External)	None	None	VII.J-15	3.3.1-94	A
Sensor Element	Pressure Boundary	Stainless Steel	Closed Cycle Cooling Water (Internal)	Loss of Material/Pitting and Crevice Corrosion	Closed-Cycle Cooling Water System	VII.C2-10	3.3.1-50	B
Strainer Body	Leakage Boundary	Carbon Steel	Air - Indoor (External)	Loss of Material/General Corrosion	External Surfaces Monitoring	VII.D-3	3.3.1-57	A
Strainer Body	Leakage Boundary	Carbon Steel	Closed Cycle Cooling Water (Internal)	Loss of Material/General, Pitting and Crevice Corrosion	Closed-Cycle Cooling Water System	VII.C2-14	3.3.1-47	B
Tanks (RACS Chemical Addition)	Leakage Boundary	Carbon Steel	Air - Indoor (External)	Loss of Material/General Corrosion	External Surfaces Monitoring	VII.I-8	3.3.1-58	A
Tanks (RACS Chemical Addition)	Leakage Boundary	Carbon Steel	Closed Cycle Cooling Water (Internal)	Loss of Material/General, Pitting and Crevice Corrosion	Closed-Cycle Cooling Water System	VII.C2-14	3.3.1-47	B
Tanks (RACS Head Tank)	Leakage Boundary	Carbon Steel	Air - Indoor (External)	Loss of Material/General Corrosion	External Surfaces Monitoring	VII.I-8	3.3.1-58	A
Tanks (RACS Head Tank)	Leakage Boundary	Carbon Steel	Closed Cycle Cooling Water (Internal)	Loss of Material/General, Pitting and Crevice Corrosion	Closed-Cycle Cooling Water System	VII.C2-14	3.3.1-47	B
Tanks (SACS Chemical Addition)	Leakage Boundary	Carbon Steel	Air - Indoor (External)	Loss of Material/General Corrosion	External Surfaces Monitoring	VII.I-8	3.3.1-58	A
Tanks (SACS Chemical Addition)	Leakage Boundary	Carbon Steel	Closed Cycle Cooling Water (Internal)	Loss of Material/General, Pitting and Crevice Corrosion	Closed-Cycle Cooling Water System	VII.C2-14	3.3.1-47	B
Tanks (SACS Demineralizers)	Leakage Boundary	Carbon Steel	Air - Indoor (External)	Loss of Material/General Corrosion	External Surfaces Monitoring	VII.I-8	3.3.1-58	A
Tanks (SACS Demineralizers)	Leakage Boundary	Carbon Steel	Closed Cycle Cooling Water (Internal)	Loss of Material/General, Pitting and Crevice Corrosion	Closed-Cycle Cooling Water System	VII.C2-14	3.3.1-47	B

Table 3.3.2-2 Closed Cycle Cooling Water System (Continued)

Component Type	Intended Function	Material	Environment	Aging Effect Requiring Management	Aging Management Programs	NUREG-1801 Vol. 2 Item	Table 1 Item	Notes
Tanks (SACS Expansion)	Pressure Boundary	Carbon Steel	Air - Indoor (External)	Loss of Material/General Corrosion	External Surfaces Monitoring	VII.I-8	3.3.1-58	A
Tanks (SACS Expansion)	Pressure Boundary	Carbon Steel	Closed Cycle Cooling Water (Internal)	Loss of Material/General, Pitting and Crevice Corrosion	Closed-Cycle Cooling Water System	VII.C2-14	3.3.1-47	B
Tanks (Supply/Return Side Accumulator, Integral Attachments)	Pressure Boundary	Carbon Steel	Air - Indoor (External)	Loss of Material/General Corrosion	External Surfaces Monitoring	VII.I-8	3.3.1-58	A
Tanks (Supply/Return Side Accumulator, Integral Attachments)	Pressure Boundary	Carbon Steel	Closed Cycle Cooling Water (Internal)	Loss of Material/General, Pitting and Crevice Corrosion	Closed-Cycle Cooling Water System	VII.C2-14	3.3.1-47	B
Thermowell	Leakage Boundary	Carbon Steel	Air - Indoor (External)	Loss of Material/General Corrosion	External Surfaces Monitoring	VII.D-3	3.3.1-57	A
Thermowell	Leakage Boundary	Carbon Steel	Closed Cycle Cooling Water (Internal)	Loss of Material/General, Pitting and Crevice Corrosion	Closed-Cycle Cooling Water System	VII.C2-14	3.3.1-47	B
Thermowell	Leakage Boundary	Stainless Steel	Air - Indoor (External)	None	None	VII.J-15	3.3.1-94	A
Thermowell	Leakage Boundary	Stainless Steel	Closed Cycle Cooling Water (Internal)	Loss of Material/Pitting and Crevice Corrosion	Closed-Cycle Cooling Water System	VII.C2-10	3.3.1-50	B
Thermowell	Pressure Boundary	Carbon Steel	Air - Indoor (External)	Loss of Material/General Corrosion	External Surfaces Monitoring	VII.D-3	3.3.1-57	A
Thermowell	Pressure Boundary	Carbon Steel	Air/Gas - Dry (Internal)	None	None	VII.J-23	3.3.1-97	A
Thermowell	Pressure Boundary	Stainless Steel	Air - Indoor (External)	None	None	VII.J-15	3.3.1-94	A
Thermowell	Pressure Boundary	Stainless Steel	Closed Cycle Cooling Water (Internal)	Loss of Material/Pitting and Crevice Corrosion	Closed-Cycle Cooling Water System	VII.C2-10	3.3.1-50	B
Valve Body	Leakage Boundary	Carbon Steel	Air - Indoor (External)	Loss of Material/General Corrosion	External Surfaces Monitoring	VII.D-3	3.3.1-57	A
Valve Body	Leakage Boundary	Carbon Steel	Closed Cycle Cooling Water (Internal)	Loss of Material/General, Pitting and Crevice Corrosion	Closed-Cycle Cooling Water System	VII.C2-14	3.3.1-47	B

Table 3.3.2-2 Closed Cycle Cooling Water System (Continued)

Component Type	Intended Function	Material	Environment	Aging Effect Requiring Management	Aging Management Programs	NUREG-1801 Vol. 2 Item	Table 1 Item	Notes
Valve Body	Leakage Boundary	Stainless Steel	Air - Indoor (External)	None	None	VII.J-15	3.3.1-94	A
Valve Body	Leakage Boundary	Stainless Steel	Closed Cycle Cooling Water (Internal)	Loss of Material/Pitting and Crevice Corrosion	Closed-Cycle Cooling Water System	VII.C2-10	3.3.1-50	B
Valve Body	Pressure Boundary	Carbon Steel	Air - Indoor (External)	Loss of Material/General Corrosion	External Surfaces Monitoring	VII.D-3	3.3.1-57	A
Valve Body	Pressure Boundary	Carbon Steel	Closed Cycle Cooling Water (Internal)	Loss of Material/General, Pitting and Crevice Corrosion	Closed-Cycle Cooling Water System	VII.C2-14	3.3.1-47	B
Valve Body	Pressure Boundary	Stainless Steel	Air - Indoor (External)	None	None	VII.J-15	3.3.1-94	A
Valve Body	Pressure Boundary	Stainless Steel	Air/Gas - Dry (Internal)	None	None	VII.J-19	3.3.1-97	A
Valve Body	Pressure Boundary	Stainless Steel	Closed Cycle Cooling Water (Internal)	Loss of Material/Pitting and Crevice Corrosion	Closed-Cycle Cooling Water System	VII.C2-10	3.3.1-50	B

Notes	Definition of Note
A	Consistent with NUREG-1801 item for component, material, environment, and aging effect. AMP is consistent with NUREG-1801 AMP.
B	Consistent with NUREG-1801 item for component, material, environment, and aging effect. AMP takes some exceptions to NUREG-1801 AMP.
C	Component is different, but consistent with NUREG-1801 item for material, environment, and aging effect. AMP is consistent with NUREG-1801 AMP.
D	Component is different, but consistent with NUREG-1801 item for material, environment, and aging effect. AMP takes some exceptions to NUREG-1801 AMP.
E	Consistent with NUREG-1801 item for material, environment and aging effect, but a different aging management program is credited or NUREG-1801 identifies a plant-specific aging management program.
F	Material not in NUREG-1801 for this component.
G	Environment not in NUREG-1801 for this component and material.
H	Aging effect not in NUREG-1801 for this component, material and environment combination.
I	Aging effect in NUREG-1801 for this component, material and environment combination is not applicable.
J	Neither the component nor the material and environment combination is evaluated in NUREG-1801.

Plant Specific Notes:

1. The Periodic Inspection aging management program will be used to manage the identified aging effects for this component type, material and environment combination.

2. NUREG-1801 specifies a plant-specific program. The Periodic Inspection aging management program will be used to manage the identified aging effects for this component type, material and environment combination.

3. Loss of material due to microbiologically influenced corrosion is not applicable for stainless steel components in a Lubricating Oil environment. Industry and plant operating experience indicates that the potential for significant degradation of lubricating oil systems due to microbiologically influenced corrosion is minimal. Lubricating oil systems are maintained to high cleanliness standards by design. Lubricating oil formulations include corrosion inhibitors, and the potential for water and contaminant intrusion is low compared to fuel oil systems; where the bulk storage, delivery and transport of the fuel oil increases the likelihood of moisture and microorganism contamination.

4. The environment for this component is glycol based coolant used in the compressor cooling system. This coolant is considered raw water for purposes of determining aging effects because it is not monitored by a chemistry program. The Periodic Inspection aging management program is used to manage the identified aging effects for this component type, material and environment combination.

Table 3.3.2-3
Compressed Air System
Summary of Aging Management Evaluation

Table 3.3.2-3 Compressed Air System

Component Type	Intended Function	Material	Environment	Aging Effect Requiring Management	Aging Management Programs	NUREG-1801 Vol. 2 Item	Table 1 Item	Notes
Accumulator	Pressure Boundary	Stainless Steel	Air - Indoor (External)	None	None	VII.J-15	3.3.1-94	A
Accumulator	Pressure Boundary	Stainless Steel	Air/Gas - Dry (Internal)	None	Compressed Air Monitoring	VII.J-18	3.3.1-98	E, 1
Bolting	Mechanical Closure	Carbon and Low Alloy Steel Bolting	Air - Indoor (External)	Loss of Material/General, Pitting and Crevice Corrosion	Bolting Integrity	VII.I-4	3.3.1-43	B
Bolting	Mechanical Closure	Carbon and Low Alloy Steel Bolting	Air - Indoor (External)	Loss of Preload/Thermal Effects, Gasket Creep, and Self-Loosening	Bolting Integrity	VII.I-5	3.3.1-45	B
Hoses	Pressure Boundary	Stainless Steel	Air - Indoor (External)	None	None	VII.J-15	3.3.1-94	A
Hoses	Pressure Boundary	Stainless Steel	Air/Gas - Dry (Internal)	None	Compressed Air Monitoring	VII.J-18	3.3.1-98	E, 1
Piping and Fittings	Pressure Boundary	Carbon Steel	Air - Indoor (External)	Loss of Material/General Corrosion	External Surfaces Monitoring	VII.D-3	3.3.1-57	A
Piping and Fittings	Pressure Boundary	Carbon Steel	Air/Gas - Dry (Internal)	None	Compressed Air Monitoring	VII.J-22	3.3.1-98	E, 1
Piping and Fittings	Pressure Boundary	Stainless Steel	Air - Indoor (External)	None	None	VII.J-15	3.3.1-94	A
Piping and Fittings	Pressure Boundary	Stainless Steel	Air/Gas - Dry (Internal)	None	Compressed Air Monitoring	VII.J-18	3.3.1-98	E, 1
Piping and Fittings	Structural Support	Carbon Steel	Air - Indoor (External)	Loss of Material/General Corrosion	External Surfaces Monitoring	VII.D-3	3.3.1-57	A
Piping and Fittings	Structural Support	Carbon Steel	Air/Gas - Dry (Internal)	None	Compressed Air Monitoring	VII.J-22	3.3.1-98	E, 1
Piping and Fittings	Structural Support	Stainless Steel	Air - Indoor (External)	None	None	VII.J-15	3.3.1-94	A
Piping and Fittings	Structural Support	Stainless Steel	Air/Gas - Dry (Internal)	None	Compressed Air Monitoring	VII.J-18	3.3.1-98	E, 1

Table 3.3.2-3 Compressed Air System (Continued)

Component Type	Intended Function	Material	Environment	Aging Effect Requiring Management	Aging Management Programs	NUREG-1801 Vol. 2 Item	Table 1 Item	Notes
Valve Body	Pressure Boundary	Carbon Steel	Air - Indoor (External)	Loss of Material/General Corrosion	External Surfaces Monitoring	VII.D-3	3.3.1-57	A
Valve Body	Pressure Boundary	Carbon Steel	Air/Gas - Dry (Internal)	None	Compressed Air Monitoring	VII.J-22	3.3.1-98	E, 1
Valve Body	Pressure Boundary	Stainless Steel	Air - Indoor (External)	None	None	VII.J-15	3.3.1-94	A
Valve Body	Pressure Boundary	Stainless Steel	Air/Gas - Dry (Internal)	None	Compressed Air Monitoring	VII.J-18	3.3.1-98	E, 1
Valve Body	Structural Support	Stainless Steel	Air - Indoor (External)	None	None	VII.J-15	3.3.1-94	A
Valve Body	Structural Support	Stainless Steel	Air/Gas - Dry (Internal)	None	Compressed Air Monitoring	VII.J-18	3.3.1-98	E, 1

Notes	Definition of Note
A	Consistent with NUREG-1801 item for component, material, environment, and aging effect. AMP is consistent with NUREG-1801 AMP.
B	Consistent with NUREG-1801 item for component, material, environment, and aging effect. AMP takes some exceptions to NUREG-1801 AMP.
C	Component is different, but consistent with NUREG-1801 item for material, environment, and aging effect. AMP is consistent with NUREG-1801 AMP.
D	Component is different, but consistent with NUREG-1801 item for material, environment, and aging effect. AMP takes some exceptions to NUREG-1801 AMP.
E	Consistent with NUREG-1801 item for material, environment and aging effect, but a different aging management program is credited or NUREG-1801 identifies a plant-specific aging management program.
F	Material not in NUREG-1801 for this component.
G	Environment not in NUREG-1801 for this component and material.
H	Aging effect not in NUREG-1801 for this component, material and environment combination.
I	Aging effect in NUREG-1801 for this component, material and environment combination is not applicable.
J	Neither the component nor the material and environment combination is evaluated in NUREG-1801.

Plant Specific Notes:

1. The environment of dried gas was used for the Compressed Air System. The Compressed Air Monitoring program is applied to the Compressed Air System components to confirm the internal environment remains sufficiently dry to preclude aging effects.

Table 3.3.2-4
Containment Inerting and Purging System
Summary of Aging Management Evaluation

Table 3.3.2-4 Containment Inerting and Purging System

Component Type	Intended Function	Material	Environment	Aging Effect Requiring Management	Aging Management Programs	NUREG-1801 Vol. 2 Item	Table 1 Item	Notes
Bolting	Mechanical Closure	Carbon and Low Alloy Steel Bolting	Air - Indoor (External)	Loss of Material/General, Pitting and Crevice Corrosion	Bolting Integrity	VII.I-4	3.3.1-43	B
Bolting	Mechanical Closure	Carbon and Low Alloy Steel Bolting	Air - Indoor (External)	Loss of Preload/Thermal Effects, Gasket Creep, and Self-Loosening	Bolting Integrity	VII.I-5	3.3.1-45	B
Expansion Joints	Structural Support	Carbon Steel	Air - Indoor (External)	Loss of Material/General Corrosion	External Surfaces Monitoring	VII.D-3	3.3.1-57	A
Expansion Joints	Structural Support	Carbon Steel	Air/Gas - Dry (Internal)	None	None	VII.J-23	3.3.1-97	A
Expansion Joints	Structural Support	Carbon Steel	Air/Gas - Wetted (Internal)	Loss of Material/General, Pitting and Crevice Corrosion	Inspection of Internal Surfaces in Miscellaneous Piping and Ducting Components	VII.G-23	3.3.1-71	A
Flow Element	Structural Support	Stainless Steel	Air - Indoor (External)	None	None	VII.J-15	3.3.1-94	A
Flow Element	Structural Support	Stainless Steel	Air/Gas - Dry (Internal)	None	None	VII.J-19	3.3.1-97	A
Piping and Fittings	Pressure Boundary	Carbon Steel	Air - Indoor (External)	Loss of Material/General Corrosion	External Surfaces Monitoring	VII.D-3	3.3.1-57	A
Piping and Fittings	Pressure Boundary	Carbon Steel	Air/Gas - Dry (Internal)	None	None	VII.J-23	3.3.1-97	A
Piping and Fittings	Pressure Boundary	Carbon Steel	Air/Gas - Wetted (Internal)	Loss of Material/General, Pitting and Crevice Corrosion	Inspection of Internal Surfaces in Miscellaneous Piping and Ducting Components	VII.G-23	3.3.1-71	A
Piping and Fittings	Pressure Boundary	Stainless Steel	Air - Indoor (External)	None	None	VII.J-15	3.3.1-94	A
Piping and Fittings	Pressure Boundary	Stainless Steel	Air/Gas - Wetted (Internal)	Loss of Material/Pitting and Crevice Corrosion	Periodic Inspection	VII.D-4	3.3.1-54	E, 1
Piping and Fittings	Structural Support	Carbon Steel	Air - Indoor (External)	Loss of Material/General Corrosion	External Surfaces Monitoring	VII.D-3	3.3.1-57	A

Table 3.3.2-4 Containment Inerting and Purging System (Continued)

Component Type	Intended Function	Material	Environment	Aging Effect Requiring Management	Aging Management Programs	NUREG-1801 Vol. 2 Item	Table 1 Item	Notes
Piping and Fittings	Structural Support	Carbon Steel	Air/Gas - Dry (Internal)	None	None	VII.J-23	3.3.1-97	A
Piping and Fittings	Structural Support	Carbon Steel	Air/Gas - Wetted (Internal)	Loss of Material/General, Pitting and Crevice Corrosion	Inspection of Internal Surfaces in Miscellaneous Piping and Ducting Components	VII.G-23	3.3.1-71	A
Piping and Fittings	Structural Support	Stainless Steel	Air - Indoor (External)	None	None	VII.J-15	3.3.1-94	A
Piping and Fittings	Structural Support	Stainless Steel	Air/Gas - Dry (Internal)	None	None	VII.J-19	3.3.1-97	A
Piping and Fittings	Structural Support	Stainless Steel	Air/Gas - Wetted (Internal)	Loss of Material/Pitting and Crevice Corrosion	Periodic Inspection	VII.D-4	3.3.1-54	E, 1
Valve Body	Pressure Boundary	Carbon Steel	Air - Indoor (External)	Loss of Material/General Corrosion	External Surfaces Monitoring	VII.D-3	3.3.1-57	A
Valve Body	Pressure Boundary	Carbon Steel	Air/Gas - Dry (Internal)	None	None	VII.J-23	3.3.1-97	A
Valve Body	Pressure Boundary	Carbon Steel	Air/Gas - Wetted (Internal)	Loss of Material/General, Pitting and Crevice Corrosion	Inspection of Internal Surfaces in Miscellaneous Piping and Ducting Components	VII.G-23	3.3.1-71	A
Valve Body	Pressure Boundary	Stainless Steel	Air - Indoor (External)	None	None	VII.J-15	3.3.1-94	A
Valve Body	Pressure Boundary	Stainless Steel	Air/Gas - Wetted (Internal)	Loss of Material/Pitting and Crevice Corrosion	Periodic Inspection	VII.D-4	3.3.1-54	E, 1
Valve Body	Structural Support	Carbon Steel	Air - Indoor (External)	Loss of Material/General Corrosion	External Surfaces Monitoring	VII.D-3	3.3.1-57	A
Valve Body	Structural Support	Carbon Steel	Air/Gas - Dry (Internal)	None	None	VII.J-23	3.3.1-97	A
Valve Body	Structural Support	Carbon Steel	Air/Gas - Wetted (Internal)	Loss of Material/General, Pitting and Crevice Corrosion	Inspection of Internal Surfaces in Miscellaneous Piping and Ducting Components	VII.G-23	3.3.1-71	A
Valve Body	Structural Support	Stainless Steel	Air - Indoor (External)	None	None	VII.J-15	3.3.1-94	A
Valve Body	Structural Support	Stainless Steel	Air/Gas - Dry (Internal)	None	None	VII.J-19	3.3.1-97	A
Valve Body	Structural Support	Stainless Steel	Air/Gas - Wetted (Internal)	Loss of Material/Pitting and Crevice Corrosion	Periodic Inspection	VII.D-4	3.3.1-54	E, 1

Notes	Definition of Note
A	Consistent with NUREG-1801 item for component, material, environment, and aging effect. AMP is consistent with NUREG-1801 AMP.
B	Consistent with NUREG-1801 item for component, material, environment, and aging effect. AMP takes some exceptions to NUREG-1801 AMP.
C	Component is different, but consistent with NUREG-1801 item for material, environment, and aging effect. AMP is consistent with NUREG-1801 AMP.
D	Component is different, but consistent with NUREG-1801 item for material, environment, and aging effect. AMP takes some exceptions to NUREG-1801 AMP.
E	Consistent with NUREG-1801 item for material, environment and aging effect, but a different aging management program is credited or NUREG-1801 identifies a plant-specific aging management program.
F	Material not in NUREG-1801 for this component.
G	Environment not in NUREG-1801 for this component and material.
H	Aging effect not in NUREG-1801 for this component, material and environment combination.
I	Aging effect in NUREG-1801 for this component, material and environment combination is not applicable.
J	Neither the component nor the material and environment combination is evaluated in NUREG-1801.

Plant Specific Notes:

1. The Periodic Inspection program is substituted to manage the aging effect(s) applicable to this component type, material, and environment combination.

Table 3.3.2-5
Control Area Chilled Water System
Summary of Aging Management Evaluation

Table 3.3.2-5 Control Area Chilled Water System

Component Type	Intended Function	Material	Environment	Aging Effect Requiring Management	Aging Management Programs	NUREG-1801 Vol. 2 Item	Table 1 Item	Notes
Bolting	Mechanical Closure	Carbon and Low Alloy Steel Bolting	Air - Indoor (External)	Loss of Material/General, Pitting and Crevice Corrosion	Bolting Integrity	VII.I-4	3.3.1-43	B
Bolting	Mechanical Closure	Carbon and Low Alloy Steel Bolting	Air - Indoor (External)	Loss of Preload/Thermal Effects, Gasket Creep, and Self-Loosening	Bolting Integrity	VII.I-5	3.3.1-45	B
Fan Housing (TSC)	Structural Support	Carbon Steel	Air - Indoor (External)	Loss of Material/General Corrosion	External Surfaces Monitoring	VII.F4-1	3.3.1-56	A
Fan Housing (TSC)	Structural Support	Carbon Steel	Air/Gas - Wetted (Internal)	Loss of Material/General, Pitting and Crevice Corrosion	Inspection of Internal Surfaces in Miscellaneous Piping and Ducting Components	VII.H2-21	3.3.1-71	C
Flow Device	Leakage Boundary	Carbon Steel	Air - Indoor (External)	Loss of Material/General Corrosion	External Surfaces Monitoring	VII.D-3	3.3.1-57	A
Flow Device	Leakage Boundary	Carbon Steel	Closed Cycle Cooling Water (Internal)	Loss of Material/General, Pitting and Crevice Corrosion	Closed-Cycle Cooling Water System	VII.C2-14	3.3.1-47	B
Flow Device	Leakage Boundary	Glass	Air - Indoor (External)	None	None	VII.J-8	3.3.1-93	A
Flow Device	Leakage Boundary	Glass	Closed Cycle Cooling Water (Internal)	None	None			G, 1
Flow Element	Pressure Boundary	Stainless Steel	Air - Indoor (External)	None	None	VII.J-15	3.3.1-94	A
Flow Element	Pressure Boundary	Stainless Steel	Closed Cycle Cooling Water (Internal)	Loss of Material/Pitting and Crevice Corrosion	Closed-Cycle Cooling Water System	VII.C2-10	3.3.1-50	B
Heat Exchanger Components (1E Panel Room Cooling Coils)	Heat Transfer	Copper Alloy with less than 15% Zinc (Tubes)	Air/Gas - Wetted (External)	Reduction of Heat Transfer/Fouling	Periodic Inspection			G, 2

Table 3.3.2-5 Control Area Chilled Water System (Continued)

Component Type	Intended Function	Material	Environment	Aging Effect Requiring Management	Aging Management Programs	NUREG-1801 Vol. 2 Item	Table 1 Item	Notes
Heat Exchanger Components (1E Panel Room Cooling Coils)	Heat Transfer	Copper Alloy with less than 15% Zinc (Tubes)	Closed Cycle Cooling Water (Internal)	Reduction of Heat Transfer/Fouling	Closed-Cycle Cooling Water System	VII.C2-2	3.3.1-52	B
Heat Exchanger Components (1E Panel Room Cooling Coils)	Pressure Boundary	Copper Alloy with less than 15% Zinc (Tubes)	Air/Gas - Wetted (External)	Loss of Material/Pitting and Crevice Corrosion	Periodic Inspection	VII.F1-16	3.3.1-25	E, 3
Heat Exchanger Components (1E Panel Room Cooling Coils)	Pressure Boundary	Copper Alloy with less than 15% Zinc (Tubes)	Closed Cycle Cooling Water (Internal)	Loss of Material/Pitting, Crevice, and Galvanic Corrosion	Closed-Cycle Cooling Water System	VII.F1-8	3.3.1-51	B
Heat Exchanger Components (Condenser)	Evaluated with the Closed Cycle Cooling Water System	Not Applicable	Not applicable	Not Applicable	Not Applicable			
Heat Exchanger Components (Conrol Equipment Room Cooling Coil)	Heat Transfer	Copper Alloy with less than 15% Zinc (Tubes)	Air/Gas - Wetted (External)	Reduction of Heat Transfer/Fouling	Periodic Inspection			G, 2
Heat Exchanger Components (Conrol Equipment Room Cooling Coil)	Heat Transfer	Copper Alloy with less than 15% Zinc (Tubes)	Closed Cycle Cooling Water (Internal)	Reduction of Heat Transfer/Fouling	Closed-Cycle Cooling Water System	VII.C2-2	3.3.1-52	B
Heat Exchanger Components (Conrol Equipment Room Cooling Coil)	Pressure Boundary	Copper Alloy with less than 15% Zinc (Tubes)	Air/Gas - Wetted (External)	Loss of Material/General, Pitting and Crevice Corrosion	Periodic Inspection	VII.F1-16	3.3.1-25	E, 3
Heat Exchanger Components (Conrol Equipment Room Cooling Coil)	Pressure Boundary	Copper Alloy with less than 15% Zinc (Tubes)	Closed Cycle Cooling Water (Internal)	Loss of Material/Pitting, Crevice, and Galvanic Corrosion	Closed-Cycle Cooling Water System	VII.F1-8	3.3.1-51	B

Table 3.3.2-5 Control Area Chilled Water System (Continued)

Component Type	Intended Function	Material	Environment	Aging Effect Requiring Management	Aging Management Programs	NUREG-1801 Vol. 2 Item	Table 1 Item	Notes
Heat Exchanger Components (Contol Room Supply Cooling Coils)	Heat Transfer	Copper Alloy with less than 15% Zinc (Tubes)	Air/Gas - Wetted (External)	Reduction of Heat Transfer/Fouling	Periodic Inspection			G, 2
Heat Exchanger Components (Contol Room Supply Cooling Coils)	Heat Transfer	Copper Alloy with less than 15% Zinc (Tubes)	Closed Cycle Cooling Water (Internal)	Reduction of Heat Transfer/Fouling	Closed-Cycle Cooling Water System	VII.C2-2	3.3.1-52	B
Heat Exchanger Components (Contol Room Supply Cooling Coils)	Pressure Boundary	Copper Alloy with less than 15% Zinc (Tubes)	Air/Gas - Wetted (External)	Loss of Material/Pitting and Crevice Corrosion	Periodic Inspection	VII.F1-16	3.3.1-25	E, 3
Heat Exchanger Components (Contol Room Supply Cooling Coils)	Pressure Boundary	Copper Alloy with less than 15% Zinc (Tubes)	Closed Cycle Cooling Water (Internal)	Loss of Material/Pitting, Crevice, and Galvanic Corrosion	Closed-Cycle Cooling Water System	VII.F1-8	3.3.1-51	B
Heat Exchanger Components (Evaporator AK 400, BK 400, AK 403, BK 403)	Heat Transfer	Copper Alloy with less than 15% Zinc (Tubes)	Air/Gas - Dry (External)	None	None	VII.J-4	3.3.1-97	C
Heat Exchanger Components (Evaporator AK 400, BK 400, AK 403, BK 403)	Heat Transfer	Copper Alloy with less than 15% Zinc (Tubes)	Closed Cycle Cooling Water (Internal)	Reduction of Heat Transfer/Fouling	Closed-Cycle Cooling Water System	VII.C2-2	3.3.1-52	B
Heat Exchanger Components (Evaporator AK 400, BK 400, AK 403, BK 403)	Pressure Boundary	Carbon Steel (Shell Side Components)	Air - Indoor (External)	Loss of Material/General Corrosion	External Surfaces Monitoring	VII.I-8	3.3.1-58	A

Table 3.3.2-5 Control Area Chilled Water System (Continued)

Component Type	Intended Function	Material	Environment	Aging Effect Requiring Management	Aging Management Programs	NUREG-1801 Vol. 2 Item	Table 1 Item	Notes
Heat Exchanger Components (Evaporator AK 400, BK 400, AK 403, BK 403)	Pressure Boundary	Carbon Steel (Shell Side Components)	Air/Gas - Dry (Internal)	None	None	VII.J-23	3.3.1-97	C
Heat Exchanger Components (Evaporator AK 400, BK 400, AK 403, BK 403)	Pressure Boundary	Carbon Steel (Tubesheet)	Air/Gas - Dry (External)	None	None	VII.J-23	3.3.1-97	C
Heat Exchanger Components (Evaporator AK 400, BK 400, AK 403, BK 403)	Pressure Boundary	Carbon Steel (Tubesheet)	Closed Cycle Cooling Water (Internal)	Loss of Material/General, Pitting, Crevice and Galvanic Corrosion	Closed-Cycle Cooling Water System	VII.C2-1	3.3.1-48	B
Heat Exchanger Components (Evaporator AK 400, BK 400, AK 403, BK 403)	Pressure Boundary	Copper Alloy with less than 15% Zinc (Tubes)	Air/Gas - Dry (External)	None	None	VII.J-4	3.3.1-97	C
Heat Exchanger Components (Evaporator AK 400, BK 400, AK 403, BK 403)	Pressure Boundary	Copper Alloy with less than 15% Zinc (Tubes)	Closed Cycle Cooling Water (Internal)	Loss of Material/Pitting, Crevice, and Galvanic Corrosion	Closed-Cycle Cooling Water System	VII.F1-8	3.3.1-51	B
Heat Exchanger Components (RSP Room Cooling Coils)	Heat Transfer	Copper Alloy with less than 15% Zinc (Tubes)	Air/Gas Wetted (External)	Reduction of Heat Transfer/Fouling	Periodic Inspection			G, 2
Heat Exchanger Components (RSP Room Cooling Coils)	Heat Transfer	Copper Alloy with less than 15% Zinc (Tubes)	Closed Cycle Cooling Water (Internal)	Reduction of Heat Transfer/Fouling	Closed-Cycle Cooling Water System	VII.C2-2	3.3.1-52	B
Heat Exchanger Components (RSP Room Cooling Coils)	Pressure Boundary	Copper Alloy with less than 15% Zinc (Tubes)	Air/Gas Wetted (External)	Loss of Material/Pitting and Crevice Corrosion	Periodic Inspection	VII.F1-16	3.3.1-25	E, 3

Table 3.3.2-5 Control Area Chilled Water System (Continued)

Component Type	Intended Function	Material	Environment	Aging Effect Requiring Management	Aging Management Programs	NUREG-1801 Vol. 2 Item	Table 1 Item	Notes
Heat Exchanger Components (RSP Room Cooling Coils)	Pressure Boundary	Copper Alloy with less than 15% Zinc (Tubes)	Closed Cycle Cooling Water (Internal)	Loss of Material/Pitting, Crevice, and Galvanic Corrosion	Closed-Cycle Cooling Water System	VII.F1-8	3.3.1-51	B
Heat Exchanger Components (SACS Room Cooling Coils)	Heat Transfer	Copper Alloy with less than 15% Zinc (Tubes)	Air/Gas - Wetted (External)	Reduction of Heat Transfer/Fouling	Periodic Inspection			G, 2
Heat Exchanger Components (SACS Room Cooling Coils)	Heat Transfer	Copper Alloy with less than 15% Zinc (Tubes)	Closed Cycle Cooling Water (Internal)	Reduction of Heat Transfer/Fouling	Closed-Cycle Cooling Water System	VII.C2-2	3.3.1-52	B
Heat Exchanger Components (SACS Room Cooling Coils)	Pressure Boundary	Copper Alloy with less than 15% Zinc (Tubes)	Air/Gas - Wetted (External)	Loss of Material/Pitting and Crevice Corrosion	Periodic Inspection	VII.F1-16	3.3.1-25	E, 3
Heat Exchanger Components (SACS Room Cooling Coils)	Pressure Boundary	Copper Alloy with less than 15% Zinc (Tubes)	Closed Cycle Cooling Water (Internal)	Loss of Material/Pitting, Crevice, and Galvanic Corrosion	Closed-Cycle Cooling Water System	VII.F1-8	3.3.1-51	B
Heat Exchanger Components (Switchgear Room Cooling Coils)	Heat Transfer	Copper Alloy with less than 15% Zinc (Tubes)	Air/Gas - Wetted (External)	Reduction of Heat Transfer/Fouling	Periodic Inspection			G, 2
Heat Exchanger Components (Switchgear Room Cooling Coils)	Heat Transfer	Copper Alloy with less than 15% Zinc (Tubes)	Closed Cycle Cooling Water (Internal)	Reduction of Heat Transfer/Fouling	Closed-Cycle Cooling Water System	VII.C2-2	3.3.1-52	B
Heat Exchanger Components (Switchgear Room Cooling Coils)	Pressure Boundary	Copper Alloy with less than 15% Zinc (Tubes)	Air/Gas - Wetted (External)	Loss of Material/Pitting and Crevice Corrosion	Periodic Inspection	VII.F1-16	3.3.1-25	E, 3
Heat Exchanger Components (Switchgear Room Cooling Coils)	Pressure Boundary	Copper Alloy with less than 15% Zinc (Tubes)	Closed Cycle Cooling Water (Internal)	Loss of Material/General, Pitting, Crevice and Galvanic Corrosion	Closed-Cycle Cooling Water System	VII.F1-8	3.3.1-51	B

Table 3.3.2-5 Control Area Chilled Water System (Continued)

Component Type	Intended Function	Material	Environment	Aging Effect Requiring Management	Aging Management Programs	NUREG-1801 Vol. 2 Item	Table 1 Item	Notes
Heat Exchanger Components (TSC Coils)	Pressure Boundary	Copper Alloy with less than 15% Zinc	Air/Gas Wetted (External)	Loss of Material/Pitting and Crevice Corrosion	Periodic Inspection	VII.F1-16	3.3.1-25	E, 3
Heat Exchanger Components (TSC Coils)	Pressure Boundary	Copper Alloy with less than 15% Zinc	Closed Cycle Cooling Water (Internal)	Loss of Material/Pitting, Crevice, and Galvanic Corrosion	Closed-Cycle Cooling Water System	VII.F1-8	3.3.1-51	B
Piping and Fittings	Leakage Boundary	Carbon Steel	Air - Indoor (External)	Loss of Material/General Corrosion	External Surfaces Monitoring	VII.D-3	3.3.1-57	A
Piping and Fittings	Leakage Boundary	Carbon Steel	Closed Cycle Cooling Water (Internal)	Loss of Material/General, Pitting and Crevice Corrosion	Closed-Cycle Cooling Water System	VII.C2-14	3.3.1-47	B
Piping and Fittings	Leakage Boundary	Carbon Steel	Treated Water (Internal)	Loss of Material/General, Pitting and Crevice Corrosion	One-Time Inspection	VII.E3-18	3.3.1-17	A
Piping and Fittings	Leakage Boundary	Carbon Steel	Treated Water (Internal)	Loss of Material/General, Pitting and Crevice Corrosion	Water Chemistry	VII.E3-18	3.3.1-17	B
Piping and Fittings	Leakage Boundary	Stainless Steel	Air - Indoor (External)	None	None	VII.J-15	3.3.1-94	A
Piping and Fittings	Leakage Boundary	Stainless Steel	Treated Water (Internal)	Loss of Material/Pitting and Crevice Corrosion	One-Time Inspection	VII.A4-11	3.3.1-24	A
Piping and Fittings	Leakage Boundary	Stainless Steel	Treated Water (Internal)	Loss of Material/Pitting and Crevice Corrosion	Water Chemistry	VII.A4-11	3.3.1-24	B
Piping and Fittings	Pressure Boundary	Carbon Steel	Air - Indoor (External)	Loss of Material/General Corrosion	External Surfaces Monitoring	VII.D-3	3.3.1-57	A
Piping and Fittings	Pressure Boundary	Carbon Steel	Closed Cycle Cooling Water (Internal)	Loss of Material/General, Pitting and Crevice Corrosion	Closed-Cycle Cooling Water System	VII.C2-14	3.3.1-47	B
Piping and Fittings	Pressure Boundary	Stainless Steel	Air - Indoor (External)	None	None	VII.J-15	3.3.1-94	A
Piping and Fittings	Pressure Boundary	Stainless Steel	Closed Cycle Cooling Water (Internal)	Loss of Material/Pitting and Crevice Corrosion	Closed-Cycle Cooling Water System	VII.C2-10	3.3.1-50	B
Piping and Fittings	Structural Support	Copper Alloy with less than 15% Zinc	Air - Indoor (External)	None	None	VIII.I-2	3.4.1-41	A

Table 3.3.2-5 Control Area Chilled Water System (Continued)

Component Type	Intended Function	Material	Environment	Aging Effect Requiring Management	Aging Management Programs	NUREG-1801 Vol. 2 Item	Table 1 Item	Notes
Piping and Fittings	Structural Support	Copper Alloy with less than 15% Zinc	Air/Gas - Dry (Internal)	None	None	VII.J-3	3.3.1-98	A
Pump Casing (Chilled Water Pump AP 400, BP 400, AP 414, BP 414)	Pressure Boundary	Carbon Steel	Air - Indoor (External)	Loss of Material/General Corrosion	External Surfaces Monitoring	VII.D-3	3.3.1-57	A
Pump Casing (Chilled Water Pump AP 400, BP 400, AP 414, BP 414)	Pressure Boundary	Carbon Steel	Closed Cycle Cooling Water (Internal)	Loss of Material/General, Pitting and Crevice Corrosion	Closed-Cycle Cooling Water System	VII.C2-14	3.3.1-47	B
Rupture Disks	Pressure Boundary	Stainless Steel	Air - Indoor (External)	None	None	VII.J-15	3.3.1-94	A
Rupture Disks	Pressure Boundary	Stainless Steel	Air/Gas - Dry (Internal)	None	None	VII.J-18	3.3.1-98	A
Rupture Disks	Structural Support	Stainless Steel	Air - Indoor (External)	None	None	VII.J-15	3.3.1-94	A
Rupture Disks	Structural Support	Stainless Steel	Air/Gas - Dry (Internal)	None	None	VII.J-18	3.3.1-98	A
Sight Glasses	Leakage Boundary	Carbon Steel	Air - Indoor (External)	Loss of Material/General Corrosion	External Surfaces Monitoring	VII.D-3	3.3.1-57	A
Sight Glasses	Leakage Boundary	Carbon Steel	Closed Cycle Cooling Water (Internal)	Loss of Material/General, Pitting and Crevice Corrosion	Closed-Cycle Cooling Water System	VII.C2-14	3.3.1-47	B
Sight Glasses	Leakage Boundary	Glass	Air - Indoor (External)	None	None	VII.J-8	3.3.1-93	A
Sight Glasses	Leakage Boundary	Glass	Closed Cycle Cooling Water (Internal)	None	None			G, 1
Sight Glasses	Pressure Boundary	Glass	Air - Indoor (External)	None	None	VII.J-8	3.3.1-93	A
Sight Glasses	Pressure Boundary	Glass	Air/Gas - Dry (Internal)	None	None	VII.J-7	3.3.1-93	A
Strainer	Filter	Stainless Steel	Closed Cycle Cooling Water (External)	Loss of Material/Pitting and Crevice Corrosion	Closed-Cycle Cooling Water System	VII.C2-10	3.3.1-50	B
Strainer	Filter	Stainless Steel	Closed Cycle Cooling Water (Internal)	Loss of Material/Pitting and Crevice Corrosion	Closed-Cycle Cooling Water System	VII.C2-10	3.3.1-50	B
Strainer Body	Pressure Boundary	Carbon Steel	Air - Indoor (External)	Loss of Material/General Corrosion	External Surfaces Monitoring	VII.D-3	3.3.1-57	A

Table 3.3.2-5 Control Area Chilled Water System (Continued)

Component Type	Intended Function	Material	Environment	Aging Effect Requiring Management	Aging Management Programs	NUREG-1801 Vol. 2 Item	Table 1 Item	Notes
Strainer Body	Pressure Boundary	Carbon Steel	Closed Cycle Cooling Water (Internal)	Loss of Material/General, Pitting and Crevice Corrosion	Closed-Cycle Cooling Water System	VII.C2-14	3.3.1-47	B
Tanks (Chem Feed AT 401, BT 401, AT 414, BT 414))	Leakage Boundary	Carbon Steel	Air - Indoor (External)	Loss of Material/General Corrosion	External Surfaces Monitoring	VII.I-8	3.3.1-58	A
Tanks (Chem Feed AT 401, BT 401, AT 414, BT 414))	Leakage Boundary	Carbon Steel	Closed Cycle Cooling Water (Internal)	Loss of Material/General, Pitting and Crevice Corrosion	Closed-Cycle Cooling Water System	VII.C2-14	3.3.1-47	B
Tanks (Head Tank AT 410, BT 410, AT413, BT 413)	Pressure Boundary	Stainless Steel	Air - Indoor (External)	None	None	VII.J-15	3.3.1-94	C
Tanks (Head Tank AT 410, BT 410, AT413, BT 413)	Pressure Boundary	Stainless Steel	Closed Cycle Cooling Water (Internal)	Loss of Material/Pitting and Crevice Corrosion	Closed-Cycle Cooling Water System	VII.C2-10	3.3.1-50	D
Thermowell	Pressure Boundary	Stainless Steel	Air - Indoor (External)	None	None	VII.J-15	3.3.1-94	A
Thermowell	Pressure Boundary	Stainless Steel	Air/Gas - Dry (Internal)	None	None	VII.J-19	3.3.1-97	A
Thermowell	Pressure Boundary	Stainless Steel	Closed Cycle Cooling Water (Internal)	Loss of Material/Pitting and Crevice Corrosion	Closed-Cycle Cooling Water System	VII.C2-10	3.3.1-50	B
Valve Body	Leakage Boundary	Carbon Steel	Air - Indoor (External)	Loss of Material/General Corrosion	External Surfaces Monitoring	VII.D-3	3.3.1-57	A
Valve Body	Leakage Boundary	Carbon Steel	Closed Cycle Cooling Water (Internal)	Loss of Material/General, Pitting and Crevice Corrosion	Closed-Cycle Cooling Water System	VII.C2-14	3.3.1-47	B
Valve Body	Leakage Boundary	Carbon Steel	Treated Water (Internal)	Loss of Material/General, Pitting and Crevice Corrosion	One-Time Inspection	VII.E3-18	3.3.1-17	A
Valve Body	Leakage Boundary	Carbon Steel	Treated Water (Internal)	Loss of Material/General, Pitting and Crevice Corrosion	Water Chemistry	VII.E3-18	3.3.1-17	B
Valve Body	Leakage Boundary	Stainless Steel	Air - Indoor (External)	None	None	VII.J-15	3.3.1-94	A
Valve Body	Leakage Boundary	Stainless Steel	Treated Water (Internal)	Loss of Material/Pitting and Crevice Corrosion	One-Time Inspection	VII.E4-14	3.3.1-24	A

Table 3.3.2-5 Control Area Chilled Water System (Continued)

Component Type	Intended Function	Material	Environment	Aging Effect Requiring Management	Aging Management Programs	NUREG-1801 Vol. 2 Item	Table 1 Item	Notes
Valve Body	Leakage Boundary	Stainless Steel	Treated Water (Internal)	Loss of Material/Pitting and Crevice Corrosion	Water Chemistry	VII.E4-14	3.3.1-24	B
Valve Body	Pressure Boundary	Carbon Steel	Air - Indoor (External)	Loss of Material/General Corrosion	External Surfaces Monitoring	VII.D-3	3.3.1-57	A
Valve Body	Pressure Boundary	Carbon Steel	Closed Cycle Cooling Water (Internal)	Loss of Material/General, Pitting and Crevice Corrosion	Closed-Cycle Cooling Water System	VII.C2-14	3.3.1-47	B
Valve Body	Structural Support	Copper Alloy with 15% Zinc or More	Air - Indoor (External)	None	None	VIII.I-2	3.4.1-41	A
Valve Body	Structural Support	Copper Alloy with 15% Zinc or More	Air/Gas - Dry (Internal)	None	None	VII.J-3	3.3.1-98	A

Notes	Definition of Note
A	Consistent with NUREG-1801 item for component, material, environment, and aging effect. AMP is consistent with NUREG-1801 AMP.
B	Consistent with NUREG-1801 item for component, material, environment, and aging effect. AMP takes some exceptions to NUREG-1801 AMP.
C	Component is different, but consistent with NUREG-1801 item for material, environment, and aging effect. AMP is consistent with NUREG-1801 AMP.
D	Component is different, but consistent with NUREG-1801 item for material, environment, and aging effect. AMP takes some exceptions to NUREG-1801 AMP.
E	Consistent with NUREG-1801 item for material, environment and aging effect, but a different aging management program is credited or NUREG-1801 identifies a plant-specific aging management program.
F	Material not in NUREG-1801 for this component.
G	Environment not in NUREG-1801 for this component and material.
H	Aging effect not in NUREG-1801 for this component, material and environment combination.
I	Aging effect in NUREG-1801 for this component, material and environment combination is not applicable.
J	Neither the component nor the material and environment combination is evaluated in NUREG-1801.

Plant Specific Notes:

1. There are no aging effects for glass in a closed cooling water environment, based on other NUREG-1801 items for glass, such as VII.J-13 for glass in a treated water environment.

2. External surfaces of coils inside the HVAC system will be inspected as part of the Periodic Inspection Program.

3. NUREG-1801 specifies a plant-specific program. The Periodic Inspection Program is used to manage the aging effect(s) applicable to this component type, material, and environment combination.

Table 3.3.2-6
Control Rod Drive System
Summary of Aging Management Evaluation

Table 3.3.2-6 Control Rod Drive System

Component Type	Intended Function	Material	Environment	Aging Effect Requiring Management	Aging Management Programs	NUREG-1801 Vol. 2 Item	Table 1 Item	Notes
Accumulator	Pressure Boundary	Carbon Steel	Air - Indoor (External)	Loss of Material/General Corrosion	External Surfaces Monitoring	VII.I-8	3.3.1-58	A
Accumulator	Pressure Boundary	Carbon Steel	Air/Gas - Dry (Internal)	None	None	VII.J-23	3.3.1-97	A
Accumulator	Pressure Boundary	Carbon Steel	Treated Water (Internal)	Loss of Material/General, Pitting and Crevice Corrosion	One-Time Inspection	VII.E3-18	3.3.1-17	A
Accumulator	Pressure Boundary	Carbon Steel	Treated Water (Internal)	Loss of Material/General, Pitting and Crevice Corrosion	Water Chemistry	VII.E3-18	3.3.1-17	B
Accumulator	Pressure Boundary	Stainless Steel	Air - Indoor (External)	None	None	VII.J-15	3.3.1-94	A
Accumulator	Pressure Boundary	Stainless Steel	Air/Gas - Dry (Internal)	None	None	VII.J-19	3.3.1-97	A
Accumulator	Pressure Boundary	Stainless Steel	Treated Water (Internal)	Loss of Material/Pitting and Crevice Corrosion	One-Time Inspection	VII.E3-15	3.3.1-24	A
Accumulator	Pressure Boundary	Stainless Steel	Treated Water (Internal)	Loss of Material/Pitting and Crevice Corrosion	Water Chemistry	VII.E3-15	3.3.1-24	B
Bolting	Mechanical Closure	Carbon and Low Alloy Steel Bolting	Air - Indoor (External)	Loss of Material/General, Pitting and Crevice Corrosion	Bolting Integrity	VII.I-4	3.3.1-43	B
Bolting	Mechanical Closure	Carbon and Low Alloy Steel Bolting	Air - Indoor (External)	Loss of Preload/Thermal Effects, Gasket Creep, and Self-Loosening	Bolting Integrity	VII.I-5	3.3.1-45	B
Filter Housing	Leakage Boundary	Stainless Steel	Air - Indoor (External)	None	None	VII.J-15	3.3.1-94	A
Filter Housing	Leakage Boundary	Stainless Steel	Treated Water (Internal)	Loss of Material/Pitting and Crevice Corrosion	One-Time Inspection	VII.E3-15	3.3.1-24	A
Filter Housing	Leakage Boundary	Stainless Steel	Treated Water (Internal)	Loss of Material/Pitting and Crevice Corrosion	Water Chemistry	VII.E3-15	3.3.1-24	B
Flow Device	Leakage Boundary	Stainless Steel	Air - Indoor (External)	None	None	VII.J-15	3.3.1-94	A

Table 3.3.2-6 Control Rod Drive System (Continued)

Component Type	Intended Function	Material	Environment	Aging Effect Requiring Management	Aging Management Programs	NUREG-1801 Vol. 2 Item	Table 1 Item	Notes
Flow Device	Leakage Boundary	Stainless Steel	Treated Water (Internal)	Loss of Material/Pitting and Crevice Corrosion	One-Time Inspection	VII.E3-15	3.3.1-24	A
Flow Device	Leakage Boundary	Stainless Steel	Treated Water (Internal)	Loss of Material/Pitting and Crevice Corrosion	Water Chemistry	VII.E3-15	3.3.1-24	B
Flow Element	Leakage Boundary	Stainless Steel	Air - Indoor (External)	None	None	VII.J-15	3.3.1-94	A
Flow Element	Leakage Boundary	Stainless Steel	Treated Water (Internal)	Loss of Material/Pitting and Crevice Corrosion	One-Time Inspection	VII.E3-15	3.3.1-24	A
Flow Element	Leakage Boundary	Stainless Steel	Treated Water (Internal)	Loss of Material/Pitting and Crevice Corrosion	Water Chemistry	VII.E3-15	3.3.1-24	B
Gearbox	Leakage Boundary	Gray Cast Iron	Air - Indoor (External)	Loss of Material/General Corrosion	External Surfaces Monitoring	VII.I-8	3.3.1-58	A
Gearbox	Leakage Boundary	Gray Cast Iron	Lubricating Oil (Internal)	Loss of Material/General, Pitting and Crevice Corrosion	Lubricating Oil Analysis	VII.H2-20	3.3.1-14	B
Gearbox	Leakage Boundary	Gray Cast Iron	Lubricating Oil (Internal)	Loss of Material/General, Pitting and Crevice Corrosion	One-Time Inspection	VII.H2-20	3.3.1-14	A
Heat Exchanger Components (CRD Pump Gear Oil Cooler)	Leakage Boundary	Carbon Steel (Shell Side Components)	Air - Indoor (External)	Loss of Material/General Corrosion	External Surfaces Monitoring	VII.I-8	3.3.1-58	A
Heat Exchanger Components (CRD Pump Gear Oil Cooler)	Leakage Boundary	Carbon Steel (Shell Side Components)	Lubricating Oil (Internal)	Loss of Material/General, Pitting and Crevice Corrosion	Lubricating Oil Analysis	VII.H2-20	3.3.1-14	D
Heat Exchanger Components (CRD Pump Gear Oil Cooler)	Leakage Boundary	Carbon Steel (Shell Side Components)	Lubricating Oil (Internal)	Loss of Material/General, Pitting and Crevice Corrosion	One-Time Inspection	VII.H2-20	3.3.1-14	C
Piping and Fittings	Leakage Boundary	Carbon Steel	Air - Indoor (External)	Loss of Material/General Corrosion	External Surfaces Monitoring	VII.I-8	3.3.1-58	A
Piping and Fittings	Leakage Boundary	Carbon Steel	Lubricating Oil (Internal)	Loss of Material/General, Pitting and Crevice Corrosion	Lubricating Oil Analysis	VII.H2-20	3.3.1-14	B

Table 3.3.2-6 Control Rod Drive System (Continued)

Component Type	Intended Function	Material	Environment	Aging Effect Requiring Management	Aging Management Programs	NUREG-1801 Vol. 2 Item	Table 1 Item	Notes
Piping and Fittings	Leakage Boundary	Carbon Steel	Lubricating Oil (Internal)	Loss of Material/General, Pitting and Crevice Corrosion	One-Time Inspection	VII.H2-20	3.3.1-14	A
Piping and Fittings	Leakage Boundary	Carbon Steel	Treated Water (Internal)	Loss of Material/General, Pitting and Crevice Corrosion	One-Time Inspection	VII.E3-18	3.3.1-17	A
Piping and Fittings	Leakage Boundary	Carbon Steel	Treated Water (Internal)	Loss of Material/General, Pitting and Crevice Corrosion	Water Chemistry	VII.E3-18	3.3.1-17	B
Piping and Fittings	Leakage Boundary	Stainless Steel	Air - Indoor (External)	None	None	VII.J-15	3.3.1-94	A
Piping and Fittings	Leakage Boundary	Stainless Steel	Treated Water (Internal)	Loss of Material/Pitting and Crevice Corrosion	One-Time Inspection	VII.E3-15	3.3.1-24	A
Piping and Fittings	Leakage Boundary	Stainless Steel	Treated Water (Internal)	Loss of Material/Pitting and Crevice Corrosion	Water Chemistry	VII.E3-15	3.3.1-24	B
Piping and Fittings	Pressure Boundary	Carbon Steel	Air - Indoor (External)	Loss of Material/General Corrosion	External Surfaces Monitoring	VII.I-8	3.3.1-58	A
Piping and Fittings	Pressure Boundary	Carbon Steel	Air/Gas - Wetted (Internal)	Loss of Material/General, Pitting and Crevice Corrosion	Inspection of Internal Surfaces in Miscellaneous Piping and Ducting Components	VII.G-23	3.3.1-71	A
Piping and Fittings	Pressure Boundary	Carbon Steel	Treated Water (Internal)	Loss of Material/Galvanic Corrosion	One-Time Inspection	VIII.E-7	3.4.1-5	C
Piping and Fittings	Pressure Boundary	Carbon Steel	Treated Water (Internal)	Loss of Material/Galvanic Corrosion	Water Chemistry	VIII.E-7	3.4.1-5	D
Piping and Fittings	Pressure Boundary	Carbon Steel	Treated Water (Internal)	Loss of Material/General, Pitting and Crevice Corrosion	One-Time Inspection	VII.E3-18	3.3.1-17	A
Piping and Fittings	Pressure Boundary	Carbon Steel	Treated Water (Internal)	Loss of Material/General, Pitting and Crevice Corrosion	Water Chemistry	VII.E3-18	3.3.1-17	B
Piping and Fittings	Pressure Boundary	Stainless Steel	Air - Indoor (External)	None	None	VII.J-15	3.3.1-94	A
Piping and Fittings	Pressure Boundary	Stainless Steel	Treated Water (Internal) > 140 F	Cracking/Stress Corrosion Cracking	One-Time Inspection	VIII.E-31	3.4.1-14	A

Table 3.3.2-6 Control Rod Drive System (Continued)

Component Type	Intended Function	Material	Environment	Aging Effect Requiring Management	Aging Management Programs	NUREG-1801 Vol. 2 Item	Table 1 Item	Notes
Piping and Fittings	Pressure Boundary	Stainless Steel	Treated Water (Internal) > 140 F	Cracking/Stress Corrosion Cracking	Water Chemistry	VIII.E-31	3.4.1-14	B
Piping and Fittings	Pressure Boundary	Stainless Steel	Treated Water (Internal) > 140 F	Loss of Material/Pitting and Crevice Corrosion	One-Time Inspection	VII.E3-15	3.3.1-24	A
Piping and Fittings	Pressure Boundary	Stainless Steel	Treated Water (Internal) > 140 F	Loss of Material/Pitting and Crevice Corrosion	Water Chemistry	VII.E3-15	3.3.1-24	B
Pump Casing (CRD)	Leakage Boundary	Carbon Steel	Air - Indoor (External)	Loss of Material/General Corrosion	External Surfaces Monitoring	VII.I-8	3.3.1-58	A
Pump Casing (CRD)	Leakage Boundary	Carbon Steel	Treated Water (Internal)	Loss of Material/General, Pitting and Crevice Corrosion	One-Time Inspection	VII.E3-18	3.3.1-17	A
Pump Casing (CRD)	Leakage Boundary	Carbon Steel	Treated Water (Internal)	Loss of Material/General, Pitting and Crevice Corrosion	Water Chemistry	VII.E3-18	3.3.1-17	B
Restricting Orifices	Leakage Boundary	Stainless Steel	Air - Indoor (External)	None	None	VII.J-15	3.3.1-94	A
Restricting Orifices	Leakage Boundary	Stainless Steel	Treated Water (Internal)	Loss of Material/Pitting and Crevice Corrosion	One-Time Inspection	VII.E3-15	3.3.1-24	A
Restricting Orifices	Leakage Boundary	Stainless Steel	Treated Water (Internal)	Loss of Material/Pitting and Crevice Corrosion	Water Chemistry	VII.E3-15	3.3.1-24	B
Rupture Disks	Pressure Boundary	Stainless Steel	Air - Indoor (External)	None	None	VII.J-15	3.3.1-94	A
Rupture Disks	Pressure Boundary	Stainless Steel	Air/Gas - Dry (Internal)	None	None	VII.J-19	3.3.1-97	A
Sensor Element	Leakage Boundary	Stainless Steel	Air - Indoor (External)	None	None	VII.J-15	3.3.1-94	A
Sensor Element	Leakage Boundary	Stainless Steel	Treated Water (Internal)	Loss of Material/Pitting and Crevice Corrosion	One-Time Inspection	VII.E3-15	3.3.1-24	A
Sensor Element	Leakage Boundary	Stainless Steel	Treated Water (Internal)	Loss of Material/Pitting and Crevice Corrosion	Water Chemistry	VII.E3-15	3.3.1-24	B
Strainer Body	Leakage Boundary	Carbon Steel	Air - Indoor (External)	Loss of Material/General Corrosion	External Surfaces Monitoring	VII.I-8	3.3.1-58	A
Strainer Body	Leakage Boundary	Carbon Steel	Treated Water (Internal)	Loss of Material/General, Pitting and Crevice Corrosion	One-Time Inspection	VII.E3-18	3.3.1-17	A

Table 3.3.2-6 Control Rod Drive System (Continued)

Component Type	Intended Function	Material	Environment	Aging Effect Requiring Management	Aging Management Programs	NUREG-1801 Vol. 2 Item	Table 1 Item	Notes
Strainer Body	Leakage Boundary	Carbon Steel	Treated Water (Internal)	Loss of Material/General, Pitting and Crevice Corrosion	Water Chemistry	VII.E3-18	3.3.1-17	B
Strainer Body	Leakage Boundary	Stainless Steel	Air - Indoor (External)	None	None	VII.J-15	3.3.1-94	A
Strainer Body	Leakage Boundary	Stainless Steel	Treated Water (Internal)	Loss of Material/Pitting and Crevice Corrosion	One-Time Inspection	VII.E3-15	3.3.1-24	A
Strainer Body	Leakage Boundary	Stainless Steel	Treated Water (Internal)	Loss of Material/Pitting and Crevice Corrosion	Water Chemistry	VII.E3-15	3.3.1-24	B
Thermowell	Leakage Boundary	Stainless Steel	Air - Indoor (External)	None	None	VII.J-15	3.3.1-94	A
Thermowell	Leakage Boundary	Stainless Steel	Treated Water (Internal)	Loss of Material/Pitting and Crevice Corrosion	One-Time Inspection	VII.E3-15	3.3.1-24	A
Thermowell	Leakage Boundary	Stainless Steel	Treated Water (Internal)	Loss of Material/Pitting and Crevice Corrosion	Water Chemistry	VII.E3-15	3.3.1-24	B
Valve Body	Leakage Boundary	Carbon Steel	Air - Indoor (External)	Loss of Material/General Corrosion	External Surfaces Monitoring	VII.I-8	3.3.1-58	A
Valve Body	Leakage Boundary	Carbon Steel	Treated Water (Internal)	Loss of Material/General, Pitting and Crevice Corrosion	One-Time Inspection	VII.E3-18	3.3.1-17	A
Valve Body	Leakage Boundary	Carbon Steel	Treated Water (Internal)	Loss of Material/General, Pitting and Crevice Corrosion	Water Chemistry	VII.E3-18	3.3.1-17	B
Valve Body	Leakage Boundary	Stainless Steel	Air - Indoor (External)	None	None	VII.J-15	3.3.1-94	A
Valve Body	Leakage Boundary	Stainless Steel	Treated Water (Internal)	Loss of Material/Pitting and Crevice Corrosion	One-Time Inspection	VII.E3-15	3.3.1-24	A
Valve Body	Leakage Boundary	Stainless Steel	Treated Water (Internal)	Loss of Material/Pitting and Crevice Corrosion	Water Chemistry	VII.E3-15	3.3.1-24	B
Valve Body	Pressure Boundary	Carbon Steel	Air - Indoor (External)	Loss of Material/General Corrosion	External Surfaces Monitoring	VII.I-8	3.3.1-58	A
Valve Body	Pressure Boundary	Carbon Steel	Air/Gas - Wetted (Internal)	Loss of Material/General, Pitting and Crevice Corrosion	Inspection of Internal Surfaces in Miscellaneous Piping and Ducting Components	VII.G-23	3.3.1-71	A

Table 3.3.2-6 Control Rod Drive System (Continued)

Component Type	Intended Function	Material	Environment	Aging Effect Requiring Management	Aging Management Programs	NUREG-1801 Vol. 2 Item	Table 1 Item	Notes
Valve Body	Pressure Boundary	Carbon Steel	Treated Water (Internal)	Loss of Material/General, Pitting and Crevice Corrosion	One-Time Inspection	VII.E3-18	3.3.1-17	A
Valve Body	Pressure Boundary	Carbon Steel	Treated Water (Internal)	Loss of Material/General, Pitting and Crevice Corrosion	Water Chemistry	VII.E3-18	3.3.1-17	B
Valve Body	Pressure Boundary	Stainless Steel	Air - Indoor (External)	None	None	VII.J-15	3.3.1-94	A
Valve Body	Pressure Boundary	Stainless Steel	Treated Water (Internal) > 140 F	Cracking/Stress Corrosion Cracking	One-Time Inspection	VIII.E-31	3.4.1-14	A
Valve Body	Pressure Boundary	Stainless Steel	Treated Water (Internal) > 140 F	Cracking/Stress Corrosion Cracking	Water Chemistry	VIII.E-31	3.4.1-14	B
Valve Body	Pressure Boundary	Stainless Steel	Treated Water (Internal) > 140 F	Loss of Material/Pitting and Crevice Corrosion	One-Time Inspection	VII.E3-15	3.3.1-24	A
Valve Body	Pressure Boundary	Stainless Steel	Treated Water (Internal) > 140 F	Loss of Material/Pitting and Crevice Corrosion	Water Chemistry	VII.E3-15	3.3.1-24	B

Notes	Definition of Note
A	Consistent with NUREG-1801 item for component, material, environment, and aging effect. AMP is consistent with NUREG-1801 AMP.
B	Consistent with NUREG-1801 item for component, material, environment, and aging effect. AMP takes some exceptions to NUREG-1801 AMP.
C	Component is different, but consistent with NUREG-1801 item for material, environment, and aging effect. AMP is consistent with NUREG-1801 AMP.
D	Component is different, but consistent with NUREG-1801 item for material, environment, and aging effect. AMP takes some exceptions to NUREG-1801 AMP.
E	Consistent with NUREG-1801 item for material, environment and aging effect, but a different aging management program is credited or NUREG-1801 identifies a plant-specific aging management program.
F	Material not in NUREG-1801 for this component.
G	Environment not in NUREG-1801 for this component and material.
H	Aging effect not in NUREG-1801 for this component, material and environment combination.
I	Aging effect in NUREG-1801 for this component, material and environment combination is not applicable.
J	Neither the component nor the material and environment combination is evaluated in NUREG-1801.

Plant Specific Notes:

None

Table 3.3.2-7
Control Room and Control Area HVAC Systems
Summary of Aging Management Evaluation

Table 3.3.2-7 Control Room and Control Area HVAC Systems

Component Type	Intended Function	Material	Environment	Aging Effect Requiring Management	Aging Management Programs	NUREG-1801 Vol. 2 Item	Table 1 Item	Notes
Bird Screen	Filter	Aluminum	Air - Outdoor (External)	Loss of Material/Pitting and Crevice Corrosion	Periodic Inspection	III.B2-7	3.5.1-50	E, 1
Bolting	Mechanical Closure	Aluminum Bolting	Air - Outdoor (External)	Loss of Material/Pitting and Crevice Corrosion	Periodic Inspection	III.B2-7	3.5.1-50	E, 1
Bolting	Mechanical Closure	Carbon and Low Alloy Steel Bolting	Air - Indoor (External)	Loss of Material/General Corrosion	External Surfaces Monitoring	VII.F1-4	3.3.1-55	A
Bolting	Mechanical Closure	Stainless Steel Bolting	Air - Outdoor (External)	Loss of Material/Pitting and Crevice Corrosion	Periodic Inspection	III.B2-7	3.5.1-50	E, 1
Damper Housing	Pressure Boundary	Carbon Steel	Air - Indoor (External)	Loss of Material/General Corrosion	External Surfaces Monitoring	VII.F1-2	3.3.1-56	A
Damper Housing	Pressure Boundary	Carbon Steel	Air/Gas - Wetted (Internal)	Loss of Material/General, Pitting and Crevice Corrosion	Inspection of Internal Surfaces in Miscellaneous Piping and Ducting Components	VII.F1-3	3.3.1-72	A
Door Seal	Pressure Boundary	Elastomer	Air - Indoor (External)	Hardening and Loss of Strength/Elastomer Degradation	Periodic Inspection	VII.F1-7	3.3.1-11	E, 2
Door Seal	Pressure Boundary	Elastomer	Air/Gas - Wetted (Internal)	Hardening and Loss of Strength/Elastomer Degradation	Periodic Inspection	VII.F1-7	3.3.1-11	E, 2
Drain Traps	Pressure Boundary	Gray Cast Iron	Air - Indoor (External)	Loss of Material/General Corrosion	External Surfaces Monitoring	VII.I-8	3.3.1-58	A
Drain Traps	Pressure Boundary	Gray Cast Iron	Air/Gas - Wetted (Internal)	Loss of Material/General, Pitting, Crevice, and Microbiologically Influenced Corrosion	Inspection of Internal Surfaces in Miscellaneous Piping and Ducting Components	VII.F1-3	3.3.1-72	C

Table 3.3.2-7 Control Room and Control Area HVAC Systems (Continued)

Component Type	Intended Function	Material	Environment	Aging Effect Requiring Management	Aging Management Programs	NUREG-1801 Vol. 2 Item	Table 1 Item	Notes
Ducting and Components	Pressure Boundary	Galvanized Steel	Air - Indoor (External)	None	None	VII.J-6	3.3.1-92	C
Ducting and Components	Pressure Boundary	Galvanized Steel	Air/Gas - Wetted (Internal)	Loss of Material/General, Pitting and Crevice Corrosion	Inspection of Internal Surfaces in Miscellaneous Piping and Ducting Components	VII.F1-3	3.3.1-72	A
Ducting and Components	Pressure Boundary	Polymer	Air - Indoor (External)	None	None			F, 3
Ducting and Components	Pressure Boundary	Polymer	Air/Gas - Wetted (Internal)	None	None			F, 3
Ducting and Components	Pressure Boundary	Stainless Steel	Air - Indoor (External)	None	None	VII.J-15	3.3.1-94	C
Ducting and Components	Pressure Boundary	Stainless Steel	Air/Gas - Wetted (Internal)	Loss of Material/Pitting and Crevice Corrosion	Periodic Inspection	VII.F1-1	3.3.1-27	E, 2
Electric Heaters (Housing)	Pressure Boundary	Stainless Steel	Air - Indoor (External)	None	None	VII.J-15	3.3.1-94	C
Electric Heaters (Housing)	Pressure Boundary	Stainless Steel	Air/Gas - Wetted (Internal)	Loss of Material/Pitting and Crevice Corrosion	Periodic Inspection	VII.F1-1	3.3.1-27	E, 2
Fan Housing	Pressure Boundary	Carbon Steel	Air - Indoor (External)	Loss of Material/General Corrosion	External Surfaces Monitoring	VII.F1-2	3.3.1-56	A
Fan Housing	Pressure Boundary	Carbon Steel	Air/Gas - Wetted (Internal)	Loss of Material/General, Pitting and Crevice Corrosion	Inspection of Internal Surfaces in Miscellaneous Piping and Ducting Components	VII.F1-3	3.3.1-72	A
Filter Housing	Pressure Boundary	Carbon Steel	Air - Indoor (External)	Loss of Material/General Corrosion	External Surfaces Monitoring	VII.F1-2	3.3.1-56	A
Filter Housing	Pressure Boundary	Carbon Steel	Air/Gas - Wetted (Internal)	Loss of Material/General, Pitting and Crevice Corrosion	Inspection of Internal Surfaces in Miscellaneous Piping and Ducting Components	VII.F1-3	3.3.1-72	A
Flexible Connection	Pressure Boundary	Elastomer	Air - Indoor (External)	Hardening and Loss of Strength/Elastomer Degradation	Periodic Inspection	VII.F1-7	3.3.1-11	E, 4

Table 3.3.2-7 Control Room and Control Area HVAC Systems (Continued)

Component Type	Intended Function	Material	Environment	Aging Effect Requiring Management	Aging Management Programs	NUREG-1801 Vol. 2 Item	Table 1 Item	Notes
Flexible Connection	Pressure Boundary	Elastomer	Air/Gas - Wetted (Internal)	Hardening and Loss of Strength/Elastomer Degradation	Periodic Inspection	VII.F1-7	3.3.1-11	E, 4
Flow Element	Pressure Boundary	Galvanized Steel	Air - Indoor (External)	None	None	VII.J-6	3.3.1-92	A
Flow Element	Pressure Boundary	Galvanized Steel	Air/Gas - Wetted (Internal)	Loss of Material/General, Pitting and Crevice Corrosion	Inspection of Internal Surfaces in Miscellaneous Piping and Ducting Components	VII.H2-21	3.3.1-71	A
Flow Element	Pressure Boundary	Stainless Steel	Air/Gas - Wetted (External)	Loss of Material/Pitting and Crevice Corrosion	Periodic Inspection	VII.F1-1	3.3.1-27	E, 2, 5
Flow Element	Pressure Boundary	Stainless Steel	Air/Gas - Wetted (Internal)	Loss of Material/Pitting and Crevice Corrosion	Periodic Inspection	VII.F1-1	3.3.1-27	E, 2
Heat Exchanger Components (Control Room Supply)	Evaluated with the Control Area Chilled Water System	Not Applicable	Not Applicable	Not Applicable	Not Applicable			
Louver	Pressure Boundary	Aluminum	Air - Indoor (External)	None	None	V.F-2	3.2.1-50	C
Louver	Pressure Boundary	Aluminum	Air/Gas - Wetted (Internal)	Loss of Material/Pitting and Crevice Corrosion	Periodic Inspection	VII.F1-14	3.3.1-27	E, 2
Louver	Pressure Boundary	Galvanized Steel	Air - Indoor (External)	None	None	VII.J-6	3.3.1-92	C
Louver	Pressure Boundary	Galvanized Steel	Air - Outdoor (External)	Loss of Material/General, Pitting and Crevice Corrosion	External Surfaces Monitoring	VII.H1-8	3.3.1-60	C
Louver	Pressure Boundary	Galvanized Steel	Air/Gas - Wetted (Internal)	Loss of Material/General, Pitting and Crevice Corrosion	Inspection of Internal Surfaces in Miscellaneous Piping and Ducting Components	VII.F1-3	3.3.1-72	A
Nozzle	Spray	Copper Alloy with 15% Zinc or More	Air/Gas - Wetted (External)	Loss of Material/Pitting and Crevice Corrosion	Periodic Inspection	VII.F1-16	3.3.1-25	E, 2, 5
Nozzle	Spray	Copper Alloy with 15% Zinc or More	Air/Gas - Wetted (Internal)	Loss of Material/Pitting and Crevice Corrosion	Periodic Inspection	VII.F1-16	3.3.1-25	E, 2
Piping and Fittings	Pressure Boundary	Carbon Steel	Air - Indoor (External)	Loss of Material/General Corrosion	External Surfaces Monitoring	VII.D-3	3.3.1-57	A

Table 3.3.2-7 Control Room and Control Area HVAC Systems (Continued)

Component Type	Intended Function	Material	Environment	Aging Effect Requiring Management	Aging Management Programs	NUREG-1801 Vol. 2 Item	Table 1 Item	Notes
Piping and Fittings	Pressure Boundary	Carbon Steel	Air/Gas - Wetted (External)	Loss of Material/General, Pitting and Crevice Corrosion	Inspection of Internal Surfaces in Miscellaneous Piping and Ducting Components	VII.H2-21	3.3.1-71	A, 5
Piping and Fittings	Pressure Boundary	Carbon Steel	Air/Gas - Wetted (Internal)	Loss of Material/General, Pitting and Crevice Corrosion	Inspection of Internal Surfaces in Miscellaneous Piping and Ducting Components	VII.H2-21	3.3.1-71	A
Piping and Fittings	Pressure Boundary	Copper Alloy with 15% Zinc or More	Air - Indoor (External)	None	None	VIII.I-2	3.4.1-41	A
Piping and Fittings	Pressure Boundary	Copper Alloy with 15% Zinc or More	Air/Gas - Wetted (Internal)	Loss of Material/Pitting and Crevice Corrosion	Periodic Inspection	VII.F1-16	3.3.1-25	E, 2
Piping and Fittings	Pressure Boundary	Stainless Steel	Air - Indoor (External)	None	None	VII.J-15	3.3.1-94	A
Piping and Fittings	Pressure Boundary	Stainless Steel	Air/Gas - Wetted (Internal)	Loss of Material/Pitting and Crevice Corrosion	Periodic Inspection	VII.F1-1	3.3.1-27	E, 2
Sensor Element (In-Duct Radiation Detector)	Pressure Boundary	Carbon Steel	Air - Indoor (External)	Loss of Material/General Corrosion	External Surfaces Monitoring	VII.D-3	3.3.1-57	A
Sensor Element (In-Duct Radiation Detector)	Pressure Boundary	Carbon Steel	Air/Gas - Wetted (Internal)	Loss of Material/General, Pitting and Crevice Corrosion	Inspection of Internal Surfaces in Miscellaneous Piping and Ducting Components	VII.H2-21	3.3.1-71	A
Sensor Element (In-Duct Radiation Detector)	Pressure Boundary	Stainless Steel	Air - Indoor (External)	None	None	VII.J-15	3.3.1-94	A
Sensor Element (In-Duct Radiation Detector)	Pressure Boundary	Stainless Steel	Air/Gas - Wetted (Internal)	Loss of Material/Pitting and Crevice Corrosion	Periodic Inspection	VII.F1-1	3.3.1-27	E, 2
Thermowell	Pressure Boundary	Stainless Steel	Air - Indoor (External)	None	None	VII.J-15	3.3.1-94	A
Thermowell	Pressure Boundary	Stainless Steel	Air/Gas - Wetted (Internal)	Loss of Material/Pitting and Crevice Corrosion	Periodic Inspection	VII.F1-1	3.3.1-27	E, 2
Valve Body	Pressure Boundary	Copper Alloy with less than 15% Zinc	Air - Indoor (External)	None	None	VIII.I-2	3.4.1-41	A

Table 3.3.2-7 Control Room and Control Area HVAC Systems (Continued)

Component Type	Intended Function	Material	Environment	Aging Effect Requiring Management	Aging Management Programs	NUREG-1801 Vol. 2 Item	Table 1 Item	Notes
Valve Body	Pressure Boundary	Copper Alloy with less than 15% Zinc	Air/Gas - Wetted (Internal)	Loss of Material/Pitting and Crevice Corrosion	Periodic Inspection	VII.F1-16	3.3.1-25	E, 2
Valve Body	Pressure Boundary	Stainless Steel	Air - Indoor (External)	None	None	VII.J-15	3.3.1-94	A
Valve Body	Pressure Boundary	Stainless Steel	Air/Gas - Wetted (Internal)	Loss of Material/Pitting and Crevice Corrosion	Periodic Inspection	VII.F1-1	3.3.1-27	E, 2

Notes	Definition of Note
A	Consistent with NUREG-1801 item for component, material, environment, and aging effect. AMP is consistent with NUREG-1801 AMP.
B	Consistent with NUREG-1801 item for component, material, environment, and aging effect. AMP takes some exceptions to NUREG-1801 AMP.
C	Component is different, but consistent with NUREG-1801 item for material, environment, and aging effect. AMP is consistent with NUREG-1801 AMP.
D	Component is different, but consistent with NUREG-1801 item for material, environment, and aging effect. AMP takes some exceptions to NUREG-1801 AMP.
E	Consistent with NUREG-1801 item for material, environment and aging effect, but a different aging management program is credited or NUREG-1801 identifies a plant-specific aging management program.
F	Material not in NUREG-1801 for this component.
G	Environment not in NUREG-1801 for this component and material.
H	Aging effect not in NUREG-1801 for this component, material and environment combination.
I	Aging effect in NUREG-1801 for this component, material and environment combination is not applicable.
J	Neither the component nor the material and environment combination is evaluated in NUREG-1801.

Plant Specific Notes:

1. The Periodic Inspection program is substituted to manage the aging effect(s) applicable to this component type, material, and environment combination.

2. NUREG-1801 specifies a plant-specfic program. The Periodic Inspection program is used to manage the aging effect(s) applicable to this component type, material, and environment.

3. The polymer (plexiglass) material located indoors and subject to an air-indoor or air-gas (wetted) environment is not subject to significant aging effects. Polymer materials do not experience aging effects unless exposed to temperatures, radiation or chemicals capable of attacking the specific polymer chemical composition. Polymer materials are selected for compatibility with the environment during the design, and if properly selected will not experience significant degradation. Polymer (plexiglass) material in this non-aggressive air environment is not expected to experience significant aging effects. This is consistent with plant operating experience.

4. NUREG-1801 specifies a plant-specfic program. The Periodic Inspection program is used to manage the aging effect(s) applicable to this component type, material, and environment combination. Inspections of the flexible connections require physical manipulation; therefore, internal and external inspections, which include physical manipulation of elastomers, will be performed at the same time under the Periodic Inspection program.

5. The environment of Air/Gas - Wetted is applicable to the external surfaces during normal operation. This component is located within the HVAC ductwork and the external surfaces of this component are exposed to the HVAC Air/Gas - Wetted evironment.

Table 3.3.2-8
Cranes & Hoists
Summary of Aging Management Evaluation

Table 3.3.2-8 Cranes & Hoists

Component Type	Intended Function	Material	Environment	Aging Effect Requiring Management	Aging Management Programs	NUREG-1801 Vol. 2 Item	Table 1 Item	Notes
Bolting	Structural Support	Carbon and Low Alloy Steel Bolting	Air - Indoor (External)	Loss of Material/General, Pitting and Crevice Corrosion	Inspection of Overhead Heavy Load and Light Load (Related to Refueling) Handling Systems	VII.I-4	3.3.1-43	E, 1
Bolting	Structural Support	Carbon and Low Alloy Steel Bolting	Air - Indoor (External)	Loss of Preload/Self-Loosening	Inspection of Overhead Heavy Load and Light Load (Related to Refueling) Handling Systems	VII.I-5	3.3.1-45	E, 1, 2
Bolting	Structural Support	Carbon and Low Alloy Steel Bolting	Air - Outdoor (External)	Loss of Material/General, Pitting and Crevice Corrosion	Inspection of Overhead Heavy Load and Light Load (Related to Refueling) Handling Systems	VII.I-1	3.3.1-43	E, 1
Bolting	Structural Support	Carbon and Low Alloy Steel Bolting	Air - Outdoor (External)	Loss of Preload/Self-Loosening	Inspection of Overhead Heavy Load and Light Load (Related to Refueling) Handling Systems	IV.C1-10	3.1.1-52	E, 1, 2
Crane/Hoist (Bridge / Trolley / Girders)	Structural Support	Carbon Steel	Air - Indoor (External)	Cumulative Fatigue Damage/Fatigue	TLAA	VII.B-2	3.3.1-1	A, 3
Crane/Hoist (Bridge / Trolley / Girders)	Structural Support	Carbon Steel	Air - Indoor (External)	Loss of Material/General Corrosion	Inspection of Overhead Heavy Load and Light Load (Related to Refueling) Handling Systems	VII.B-3	3.3.1-73	A

Table 3.3.2-8 Cranes & Hoists (Continued)

Component Type	Intended Function	Material	Environment	Aging Effect Requiring Management	Aging Management Programs	NUREG-1801 Vol. 2 Item	Table 1 Item	Notes
Crane/Hoist (Bridge / Trolley / Girders)	Structural Support	Carbon Steel	Air - Outdoor (External)	Cumulative Fatigue Damage/Fatigue	TLAA			G, 3
Crane/Hoist (Bridge / Trolley / Girders)	Structural Support	Carbon Steel	Air - Outdoor (External)	Loss of Material/General, Pitting and Crevice Corrosion	Inspection of Overhead Heavy Load and Light Load (Related to Refueling) Handling Systems	VII.H1-8	3.3.1-60	E, 1
Crane/Hoist (Jib Crane Columns / Beams / Plates / Anchorage)	Structural Support	Carbon Steel	Air - Indoor (External)	Loss of Material/General Corrosion	Inspection of Overhead Heavy Load and Light Load (Related to Refueling) Handling Systems	VII.B-3	3.3.1-73	A
Crane/Hoist (Jib Crane Columns / Beams / Plates / Anchorage)	Structural Support	Carbon Steel	Air - Outdoor (External)	Loss of Material/General, Pitting and Crevice Corrosion	Inspection of Overhead Heavy Load and Light Load (Related to Refueling) Handling Systems	VII.H1-8	3.3.1-60	E, 1
Crane/Hoist (Monorail Beams / Lifting Devices / Plates)	Structural Support	Carbon Steel	Air - Indoor (External)	Loss of Material/General Corrosion	Inspection of Overhead Heavy Load and Light Load (Related to Refueling) Handling Systems	VII.B-3	3.3.1-73	A
Crane/Hoist (Monorail Beams / Lifting Devices / Plates)	Structural Support	Carbon Steel	Air - Outdoor (External)	Loss of Material/General, Pitting and Crevice Corrosion	Inspection of Overhead Heavy Load and Light Load (Related to Refueling) Handling Systems	VII.H1-8	3.3.1-60	E, 1
Crane/Hoist (Rail System)	Structural Support	Carbon Steel	Air - Indoor (External)	Loss of Material/General Corrosion	Inspection of Overhead Heavy Load and Light Load (Related to Refueling) Handling Systems	VII.B-3	3.3.1-73	C

Table 3.3.2-8 Cranes & Hoists (Continued)

Component Type	Intended Function	Material	Environment	Aging Effect Requiring Management	Aging Management Programs	NUREG-1801 Vol. 2 Item	Table 1 Item	Notes
Crane/Hoist (Rail System)	Structural Support	Carbon Steel	Air - Indoor (External)	Loss of Material/Wear	Inspection of Overhead Heavy Load and Light Load (Related to Refueling) Handling Systems	VII.B-1	3.3.1-74	A
Crane/Hoist (Rail System)	Structural Support	Carbon Steel	Air - Outdoor (External)	Loss of Material/General, Pitting and Crevice Corrosion	Inspection of Overhead Heavy Load and Light Load (Related to Refueling) Handling Systems	VII.H1-8	3.3.1-60	E, 1
Crane/Hoist (Rail System)	Structural Support	Carbon Steel	Air - Outdoor (External)	Loss of Material/Wear	Inspection of Overhead Heavy Load and Light Load (Related to Refueling) Handling Systems			G

Notes	Definition of Note
A	Consistent with NUREG-1801 item for component, material, environment, and aging effect. AMP is consistent with NUREG-1801 AMP.
B	Consistent with NUREG-1801 item for component, material, environment, and aging effect. AMP takes some exceptions to NUREG-1801 AMP.
C	Component is different, but consistent with NUREG-1801 item for material, environment, and aging effect. AMP is consistent with NUREG-1801 AMP.
D	Component is different, but consistent with NUREG-1801 item for material, environment, and aging effect. AMP takes some exceptions to NUREG-1801 AMP.
E	Consistent with NUREG-1801 item for material, environment and aging effect, but a different aging management program is credited or NUREG-1801 identifies a plant-specific aging management program.
F	Material not in NUREG-1801 for this component.
G	Environment not in NUREG-1801 for this component and material.
H	Aging effect not in NUREG-1801 for this component, material and environment combination.
I	Aging effect in NUREG-1801 for this component, material and environment combination is not applicable.
J	Neither the component nor the material and environment combination is evaluated in NUREG-1801.

Plant Specific Notes:

1. The Inspection of Overhead Heavy Load and Light Load (Related to Refueling) Handling Systems Program is substituted to manage the aging effect(s) applicable to this component type, material, and environment combination.

2. The aging mechanisms of Thermal Effects and Gasket Creep are not applicable to this component type, material, and environment combination.

3. The TLAA designation in the Aging Management Program column indicates fatigue of this component is evaluated in Section 4.7.

Table 3.3.2-9
Equipment and Floor Drainage System
Summary of Aging Management Evaluation

Table 3.3.2-9 Equipment and Floor Drainage System

Component Type	Intended Function	Material	Environment	Aging Effect Requiring Management	Aging Management Programs	NUREG-1801 Vol. 2 Item	Table 1 Item	Notes
Bolting	Mechanical Closure	Carbon and Low Alloy Steel Bolting	Air - Indoor (External)	Loss of Material/General, Pitting and Crevice Corrosion	Bolting Integrity	VII.I-4	3.3.1-43	B
Bolting	Mechanical Closure	Carbon and Low Alloy Steel Bolting	Air - Indoor (External)	Loss of Preload/Thermal Effects, Gasket Creep, and Self-Loosening	Bolting Integrity	VII.I-5	3.3.1-45	B
Drum Traps	Leakage Boundary	Carbon Steel	Air - Indoor (External)	Loss of Material/General Corrosion	External Surfaces Monitoring	VII.I-8	3.3.1-58	A
Drum Traps	Leakage Boundary	Carbon Steel	Raw Water (Internal)	Loss of Material/General, Pitting, Crevice, and Microbiologically Influenced Corrosion, and Fouling	Inspection of Internal Surfaces in Miscellaneous Piping and Ducting Components	VII.G-24	3.3.1-68	E, 1
Piping and Fittings	Leakage Boundary	Carbon Steel	Air - Indoor (External)	Loss of Material/General Corrosion	External Surfaces Monitoring	VII.D-3	3.3.1-57	A
Piping and Fittings	Leakage Boundary	Carbon Steel	Raw Water (Internal)	Loss of Material/General, Pitting, Crevice, Galvanic, and Microbiologically Influenced Corrosion, and Fouling	Inspection of Internal Surfaces in Miscellaneous Piping and Ducting Components	VII.C1-5	3.3.1-77	E, 1
Piping and Fittings	Leakage Boundary	Copper Alloy with less than 15% Zinc	Air - Indoor (External)	None	None	VIII.I-2	3.4.1-41	A
Piping and Fittings	Leakage Boundary	Copper Alloy with less than 15% Zinc	Raw Water (Internal)	Loss of Material/Pitting, Crevice, and Microbiologically Influenced Corrosion, and Fouling	Periodic Inspection	VII.C1-9	3.3.1-81	E, 2
Piping and Fittings	Leakage Boundary	Galvanized Steel	Air - Indoor (External)	None	None	VII.J-6	3.3.1-92	A

Table 3.3.2-9 Equipment and Floor Drainage System (Continued)

Component Type	Intended Function	Material	Environment	Aging Effect Requiring Management	Aging Management Programs	NUREG-1801 Vol. 2 Item	Table 1 Item	Notes
Piping and Fittings	Leakage Boundary	Galvanized Steel	Raw Water (Internal)	Loss of Material/General, Pitting, Crevice, and Microbiologically Influenced Corrosion, and Fouling	Inspection of Internal Surfaces in Miscellaneous Piping and Ducting Components	VII.G-24	3.3.1-68	E, 1
Piping and Fittings	Leakage Boundary	Gray Cast Iron	Air - Indoor (External)	Loss of Material/General Corrosion	External Surfaces Monitoring	VII.D-3	3.3.1-57	A
Piping and Fittings	Leakage Boundary	Gray Cast Iron	Raw Water (Internal)	Loss of Material/General, Pitting, Crevice, and Microbiologically Influenced Corrosion, and Fouling	Inspection of Internal Surfaces in Miscellaneous Piping and Ducting Components	VII.G-24	3.3.1-68	E, 1
Piping and Fittings	Leakage Boundary	Gray Cast Iron	Raw Water (Internal)	Loss of Material/Selective Leaching	Selective Leaching of Materials	VII.C1-11	3.3.1-85	A
Piping and Fittings	Leakage Boundary	Stainless Steel	Air - Indoor (External)	None	None	VII.J-15	3.3.1-94	A
Piping and Fittings	Leakage Boundary	Stainless Steel	Raw Water (Internal)	Loss of Material/Pitting, Crevice, and Microbiologically Influenced Corrosion, and Fouling	Periodic Inspection	V.C-3	3.2.1-38	E, 2
Piping and Fittings	Pressure Boundary	Carbon Steel	Air - Indoor (External)	Loss of Material/General Corrosion	External Surfaces Monitoring	VII.D-3	3.3.1-57	A
Piping and Fittings	Pressure Boundary	Carbon Steel	Raw Water (Internal)	Loss of Material/General, Pitting, Crevice, Galvanic, and Microbiologically Influenced Corrosion, and Fouling	Inspection of Internal Surfaces in Miscellaneous Piping and Ducting Components	VII.C1-5	3.3.1-77	E, 1
Piping and Fittings	Pressure Boundary	Galvanized Steel	Air - Indoor (External)	None	None	VII.J-6	3.3.1-92	A
Piping and Fittings	Pressure Boundary	Galvanized Steel	Raw Water (Internal)	Loss of Material/General, Pitting, Crevice, and Microbiologically Influenced Corrosion, and Fouling	Inspection of Internal Surfaces in Miscellaneous Piping and Ducting Components	VII.G-24	3.3.1-68	E, 1
Piping and Fittings	Pressure Boundary	Gray Cast Iron	Air - Indoor (External)	Loss of Material/General Corrosion	External Surfaces Monitoring	VII.D-3	3.3.1-57	A

Table 3.3.2-9 Equipment and Floor Drainage System (Continued)

Component Type	Intended Function	Material	Environment	Aging Effect Requiring Management	Aging Management Programs	NUREG-1801 Vol. 2 Item	Table 1 Item	Notes
Piping and Fittings	Pressure Boundary	Gray Cast Iron	Raw Water (Internal)	Loss of Material/General, Pitting, Crevice, and Microbiologically Influenced Corrosion, and Fouling	Inspection of Internal Surfaces in Miscellaneous Piping and Ducting Components	VII.G-24	3.3.1-68	E, 1
Piping and Fittings	Pressure Boundary	Gray Cast Iron	Raw Water (Internal)	Loss of Material/Selective Leaching	Selective Leaching of Materials	VII.C1-11	3.3.1-85	A
Tanks (Neutralizers and Oil Interceptor)	Leakage Boundary	Carbon Steel	Air - Indoor (External)	Loss of Material/General Corrosion	External Surfaces Monitoring	VII.I-8	3.3.1-58	A
Tanks (Neutralizers and Oil Interceptor)	Leakage Boundary	Carbon Steel	Raw Water (Internal)	Loss of Material/General, Pitting, Crevice, and Microbiologically Influenced Corrosion, and Fouling	Inspection of Internal Surfaces in Miscellaneous Piping and Ducting Components	VII.G-24	3.3.1-68	E, 1
Valve Body	Leakage Boundary	Carbon Steel	Air - Indoor (External)	Loss of Material/General Corrosion	External Surfaces Monitoring	VII.D-3	3.3.1-57	A
Valve Body	Leakage Boundary	Carbon Steel	Raw Water (Internal)	Loss of Material/General, Pitting, Crevice, and Microbiologically Influenced Corrosion, and Fouling	Inspection of Internal Surfaces in Miscellaneous Piping and Ducting Components	VII.G-24	3.3.1-68	E, 1
Valve Body	Leakage Boundary	Ductile Cast Iron	Air - Indoor (External)	Loss of Material/General Corrosion	External Surfaces Monitoring	VII.D-3	3.3.1-57	A
Valve Body	Leakage Boundary	Ductile Cast Iron	Raw Water (Internal)	Loss of Material/General, Pitting, Crevice, and Microbiologically Influenced Corrosion, and Fouling	Inspection of Internal Surfaces in Miscellaneous Piping and Ducting Components	VII.G-24	3.3.1-68	E, 1
Valve Body	Leakage Boundary	Stainless Steel	Air - Indoor (External)	None	None	VII.J-15	3.3.1-94	A
Valve Body	Leakage Boundary	Stainless Steel	Raw Water (Internal)	Loss of Material/Pitting, Crevice, and Microbiologically Influenced Corrosion, and Fouling	Periodic Inspection	V.C-3	3.2.1-38	E, 2

Table 3.3.2-9 Equipment and Floor Drainage System (Continued)

Component Type	Intended Function	Material	Environment	Aging Effect Requiring Management	Aging Management Programs	NUREG-1801 Vol. 2 Item	Table 1 Item	Notes
Valve Body	Pressure Boundary	Carbon Steel	Air - Indoor (External)	Loss of Material/General Corrosion	External Surfaces Monitoring	VII.D-3	3.3.1-57	A
Valve Body	Pressure Boundary	Carbon Steel	Raw Water (Internal)	Loss of Material/General, Pitting, Crevice, and Microbiologically Influenced Corrosion, and Fouling	Inspection of Internal Surfaces in Miscellaneous Piping and Ducting Components	VII.G-24	3.3.1-68	E, 1
Valve Body	Pressure Boundary	Ductile Cast Iron	Air - Indoor (External)	Loss of Material/General Corrosion	External Surfaces Monitoring	VII.D-3	3.3.1-57	A
Valve Body	Pressure Boundary	Ductile Cast Iron	Raw Water (Internal)	Loss of Material/General, Pitting, Crevice, and Microbiologically Influenced Corrosion, and Fouling	Inspection of Internal Surfaces in Miscellaneous Piping and Ducting Components	VII.G-24	3.3.1-68	E, 1

Notes	Definition of Note
A	Consistent with NUREG-1801 item for component, material, environment, and aging effect. AMP is consistent with NUREG-1801 AMP.
B	Consistent with NUREG-1801 item for component, material, environment, and aging effect. AMP takes some exceptions to NUREG-1801 AMP.
C	Component is different, but consistent with NUREG-1801 item for material, environment, and aging effect. AMP is consistent with NUREG-1801 AMP.
D	Component is different, but consistent with NUREG-1801 item for material, environment, and aging effect. AMP takes some exceptions to NUREG-1801 AMP.
E	Consistent with NUREG-1801 item for material, environment and aging effect, but a different aging management program is credited or NUREG-1801 identifies a plant-specific aging management program.
F	Material not in NUREG-1801 for this component.
G	Environment not in NUREG-1801 for this component and material.
H	Aging effect not in NUREG-1801 for this component, material and environment combination.
I	Aging effect in NUREG-1801 for this component, material and environment combination is not applicable.
J	Neither the component nor the material and environment combination is evaluated in NUREG-1801.

Plant Specific Notes:

1. The Inspection of internal Surfaces in Miscellaneous Piping and Ducting Components program is substituted to manage the aging effect(s) applicable to this component type, material, and environment combination.

2. The Periodic Inspection program is substituted to manage the aging effect(s) applicable to this component type, material, and environment combination.

Table 3.3.2-10
Fire Protection System
Summary of Aging Management Evaluation

Table 3.3.2-10 Fire Protection System

Component Type	Intended Function	Material	Environment	Aging Effect Requiring Management	Aging Management Programs	NUREG-1801 Vol. 2 Item	Table 1 Item	Notes
Bird Screen (Fire Water Tank Vents)	Filter	Aluminum	Air - Outdoor	Loss of Material/Pitting and Crevice Corrosion	Fire Protection	III.B2-7	3.5.1-50	E, 1
Bolting	Mechanical Closure	Carbon and Low Alloy Steel Bolting	Air - Indoor (External)	Loss of Material/General, Pitting and Crevice Corrosion	Bolting Integrity	VII.I-4	3.3.1-43	B
Bolting	Mechanical Closure	Carbon and Low Alloy Steel Bolting	Air - Indoor (External)	Loss of Preload/Thermal Effects, Gasket Creep, and Self-Loosening	Bolting Integrity	VII.I-5	3.3.1-45	B
Bolting	Mechanical Closure	Carbon and Low Alloy Steel Bolting	Air - Outdoor (External)	Loss of Material/General, Pitting and Crevice Corrosion	Bolting Integrity	VII.I-1	3.3.1-43	B
Bolting	Mechanical Closure	Carbon and Low Alloy Steel Bolting	Air - Outdoor (External)	Loss of Preload/Thermal Effects, Gasket Creep, and Self-Loosening	Bolting Integrity	IV.C1-10	3.1.1-52	B
Bolting	Mechanical Closure	Carbon and Low Alloy Steel Bolting	Soil (External)	Loss of Material/General, Pitting, Crevice, and Microbiologically Influenced Corrosion	Bolting Integrity			G, 3
Bolting	Mechanical Closure	Carbon and Low Alloy Steel Bolting	Soil (External)	Loss of Preload/Thermal Effects, Gasket Creep, and Self-Loosening	Bolting Integrity			G, 3
Concrete Curbs	Direct Flow (Contains Oil Spills)	Concrete	Air - Outdoor	Cracking, Loss of Bond, and Loss of Material (Spalling, Scaling)/Corrosion of Embedded Steel	Structures Monitoring Program	III.A3-9	3.5.1-23	A

Table 3.3.2-10 Fire Protection System (Continued)

Component Type	Intended Function	Material	Environment	Aging Effect Requiring Management	Aging Management Programs	NUREG-1801 Vol. 2 Item	Table 1 Item	Notes
Concrete Curbs	Direct Flow (Contains Oil Spills)	Concrete	Air - Outdoor	Cracks and Distortion/Increased Stress Levels from Settlement	Structures Monitoring Program	III.A3-3	3.5.1-28	A
Concrete Curbs	Direct Flow (Contains Oil Spills)	Concrete	Air - Outdoor	Loss of Material (Spalling, Scaling) and Cracking/Freeze-thaw	Structures Monitoring Program	III.A3-6	3.5.1-26	A
Concrete Curbs	Direct Flow (Contains Oil Spills)	Concrete	Groundwater/Soil	Cracking, Loss of Bond, and Loss of Material (Spalling, Scaling)/Corrosion of Embedded Steel	Structures Monitoring Program	III.A3-4	3.5.1-31	A
Concrete Curbs	Direct Flow (Contains Oil Spills)	Concrete	Groundwater/Soil	Cracks and Distortion/Increased Stress Levels from Settlement	Structures Monitoring Program	III.A3-3	3.5.1-28	A
Concrete Curbs	Direct Flow (Contains Oil Spills)	Concrete	Groundwater/Soil	Increase in Porosity and Permeability, Cracking, Loss of Material (Spalling, Scaling)/ Aggressive Chemical Attack	Structures Monitoring Program	III.A3-5	3.5.1-31	A
Damper Housing	Fire Barrier	Galvanized Steel	Air - Indoor (External)	None	None	VII.J-6	3.3.1-92	A
Damper Housing	Fire Barrier	Galvanized Steel	Air/Gas - Wetted (Internal)	Loss of Material/General, Pitting and Crevice Corrosion	Fire Protection	VII.F1-3	3.3.1-72	E, 1
Damper Housing	Pressure Boundary	Galvanized Steel	Air - Indoor (External)	None	None	VII.J-6	3.3.1-92	A
Damper Housing	Pressure Boundary	Galvanized Steel	Air/Gas - Wetted (Internal)	Loss of Material/General, Pitting and Crevice Corrosion	Fire Protection	VII.F1-3	3.3.1-72	E, 1
Doors	Fire Barrier	Carbon Steel	Air - Indoor	Loss of Material/General Corrosion	Fire Protection	VII.I-8	3.3.1-58	E, 1
Doors	Fire Barrier	Carbon Steel	Air - Indoor	Loss of Material/Wear	Fire Protection	VII.G-3	3.3.1-63	B
Doors	Fire Barrier	Carbon Steel	Air - Outdoor	Loss of Material/General, Pitting and Crevice Corrosion	Fire Protection	VII.H1-8	3.3.1-60	E, 1

Table 3.3.2-10 Fire Protection System (Continued)

Component Type	Intended Function	Material	Environment	Aging Effect Requiring Management	Aging Management Programs	NUREG-1801 Vol. 2 Item	Table 1 Item	Notes
Doors	Fire Barrier	Carbon Steel	Air - Outdoor	Loss of Material/Wear	Fire Protection	VII.G-4	3.3.1-63	B
Electric Heaters (Fire Water Storage Tank Heaters)	Pressure Boundary	Stainless Steel	Air - Outdoor (External)	Loss of Material/Pitting and Crevice Corrosion	Aboveground Steel Tanks	III.B2-7	3.5.1-50	E, 4
Electric Heaters (Fire Water Storage Tank Heaters)	Pressure Boundary	Stainless Steel	Raw Water (Internal)	Loss of Material/Pitting, Crevice, and Microbiologically Influenced Corrosion, and Fouling	Fire Water System	V.C-3	3.2.1-38	E, 5
Filter Housing	Pressure Boundary	Carbon Steel	Air - Indoor (External)	Loss of Material/General Corrosion	Fire Protection	VII.D-3	3.3.1-57	E, 1
Filter Housing	Pressure Boundary	Carbon Steel	Fuel Oil (Internal)	Loss of Material/General, Pitting, Crevice, and Microbiologically Influenced Corrosion, and Fouling	Fuel Oil Chemistry	VII.H1-10	3.3.1-20	B
Filter Housing	Pressure Boundary	Carbon Steel	Fuel Oil (Internal)	Loss of Material/General, Pitting, Crevice, and Microbiologically Influenced Corrosion, and Fouling	One-Time Inspection	VII.H1-10	3.3.1-20	A
Fire Barriers (Masonry Walls: Interior)	Fire Barrier	Concrete block	Air - Indoor	Cracking, Loss of Bond, and Loss of Material (Spalling, Scaling)/Corrosion of Embedded Steel	Fire Protection	III.A3-9	3.5.1-23	E, 6
Fire Barriers (Masonry Walls: Interior)	Fire Barrier	Concrete block	Air - Indoor	Cracking, Loss of Bond, and Loss of Material (Spalling, Scaling)/Corrosion of Embedded Steel	Structures Monitoring Program	III.A3-9	3.5.1-23	C
Fire Barriers (Masonry Walls: Interior)	Fire Barrier	Concrete block	Air - Indoor	Cracking/Restraint, Shrinkage, Creep, and Aggressive Environment	Fire Protection	III.A3-11	3.5.1-43	E, 6

Table 3.3.2-10 Fire Protection System (Continued)

Component Type	Intended Function	Material	Environment	Aging Effect Requiring Management	Aging Management Programs	NUREG-1801 Vol. 2 Item	Table 1 Item	Notes
Fire Barriers (Masonry Walls: Interior)	Fire Barrier	Concrete block	Air - Indoor	Cracking/Restraint, Shrinkage, Creep, and Aggressive Environment	Structures Monitoring Program	III.A3-11	3.5.1-43	A, 7
Fire Barriers (Masonry Walls: Interior)	Fire Barrier	Concrete block	Air - Indoor	Cracks and Distortion/Increased Stress Levels from Settlement	Fire Protection	III.A3-3	3.5.1-28	E, 6
Fire Barriers (Masonry Walls: Interior)	Fire Barrier	Concrete block	Air - Indoor	Cracks and Distortion/Increased Stress Levels from Settlement	Structures Monitoring Program	III.A3-3	3.5.1-28	A
Fire Barriers (Penetration Seals)	Fire Barrier	Elastomer	Air - Indoor	Increased Hardness, Shrinkage and Loss of Strength/Weathering	Fire Protection	VII.G-1	3.3.1-61	B
Fire Barriers (Penetration Seals)	Fire Barrier	Elastomer	Air - Outdoor	Increased Hardness, Shrinkage and Loss of Strength/Weathering	Fire Protection	VII.G-2	3.3.1-61	B
Fire Barriers (Penetration Seals)	Fire Barrier	Grout	Air - Indoor	Cracking/Shrinkage	Fire Protection			F, 8
Fire Barriers (Penetration Seals)	Fire Barrier	Grout	Air - Indoor	Cracking/Shrinkage	Structures Monitoring Program			F, 8
Fire Barriers (Penetration Seals)	Fire Barrier	Grout	Air - Outdoor	Cracking/Shrinkage	Fire Protection			F, 8
Fire Barriers (Penetration Seals)	Fire Barrier	Grout	Air - Outdoor	Cracking/Shrinkage	Structures Monitoring Program			F, 8
Fire Barriers (Penetration Seals)	Fire Barrier	Grout	Air - Outdoor	Loss of Material (Spalling, Scaling) and Cracking/Freeze-thaw	Fire Protection			F, 9
Fire Barriers (Penetration Seals)	Fire Barrier	Grout	Air - Outdoor	Loss of Material (Spalling, Scaling) and Cracking/Freeze-thaw	Structures Monitoring Program			F, 9

Table 3.3.2-10 Fire Protection System (Continued)

Component Type	Intended Function	Material	Environment	Aging Effect Requiring Management	Aging Management Programs	NUREG-1801 Vol. 2 Item	Table 1 Item	Notes
Fire Barriers (Walls, Ceilings and Floors)	Fire Barrier	Reinforced Concrete	Air - Indoor	Cracking, Loss of Bond, and Loss of Material (Spalling, Scaling)/Corrosion of Embedded Steel	Structures Monitoring Program	III.A3-9	3.5.1-23	A
Fire Barriers (Walls, Ceilings and Floors)	Fire Barrier	Reinforced Concrete	Air - Indoor	Cracks and Distortion/Increased Stress Levels from Settlement	Fire Protection	III.A3-3	3.5.1-28	E, 6
Fire Barriers (Walls, Ceilings and Floors)	Fire Barrier	Reinforced Concrete	Air - Indoor	Cracks and Distortion/Increased Stress Levels from Settlement	Structures Monitoring Program	III.A3-3	3.5.1-28	A
Fire Barriers (Walls, Ceilings and Floors)	Fire Barrier	Reinforced Concrete	Air - Indoor	Loss of Material/Corrosion of Embedded Steel	Fire Protection	VII.G-29	3.3.1-67	B
Fire Barriers (Walls, Ceilings and Floors)	Fire Barrier	Reinforced Concrete	Air - Indoor	Loss of Material/Corrosion of Embedded Steel	Structures Monitoring Program	VII.G-29	3.3.1-67	A
Fire Barriers (Walls, Ceilings and Floors)	Fire Barrier	Reinforced Concrete	Air - Outdoor	Concrete Cracking and Spalling/Freeze-thaw	Fire Protection	VII.G-30	3.3.1-66	B, 10
Fire Barriers (Walls, Ceilings and Floors)	Fire Barrier	Reinforced Concrete	Air - Outdoor	Concrete Cracking and Spalling/Freeze-thaw	Structures Monitoring Program	VII.G-30	3.3.1-66	A, 10
Fire Barriers (Walls, Ceilings and Floors)	Fire Barrier	Reinforced Concrete	Air - Outdoor	Cracking, Loss of Bond, and Loss of Material (Spalling, Scaling)/Corrosion of Embedded Steel	Structures Monitoring Program	III.A3-9	3.5.1-23	A
Fire Barriers (Walls, Ceilings and Floors)	Fire Barrier	Reinforced Concrete	Air - Outdoor	Cracks and Distortion/Increased Stress Levels from Settlement	Fire Protection	III.A3-3	3.5.1-28	E, 6

Table 3.3.2-10 Fire Protection System (Continued)

Component Type	Intended Function	Material	Environment	Aging Effect Requiring Management	Aging Management Programs	NUREG-1801 Vol. 2 Item	Table 1 Item	Notes
Fire Barriers (Walls, Ceilings and Floors)	Fire Barrier	Reinforced Concrete	Air - Outdoor	Cracks and Distortion/Increased Stress Levels from Settlement	Structures Monitoring Program	III.A3-3	3.5.1-28	A
Fire Barriers (Walls, Ceilings and Floors)	Fire Barrier	Reinforced Concrete	Air - Outdoor	Loss of Material/Corrosion of Embedded Steel	Fire Protection	VII.G-31	3.3.1-67	B
Fire Barriers (Walls, Ceilings and Floors)	Fire Barrier	Reinforced Concrete	Air - Outdoor	Loss of Material/Corrosion of Embedded Steel	Structures Monitoring Program	VII.G-31	3.3.1-67	A
Fire Barriers (Wraps)	Fire Barrier	Alumina Silicate	Air - Indoor	Change in Material Properties	Fire Protection			F, 11
Fire Barriers (Wraps)	Fire Barrier	Alumina Silicate	Air - Indoor	Cracking	Fire Protection			F, 11
Fire Hydrant	Pressure Boundary	Gray Cast Iron	Air - Outdoor (External)	Loss of Material/General, Pitting and Crevice Corrosion	External Surfaces Monitoring	VII.H1-8	3.3.1-60	A
Fire Hydrant	Pressure Boundary	Gray Cast Iron	Air - Outdoor (External)	Loss of Material/General, Pitting and Crevice Corrosion	Fire Water System	VII.H1-8	3.3.1-60	E, 12
Fire Hydrant	Pressure Boundary	Gray Cast Iron	Raw Water (Internal)	Loss of Material/General, Pitting, Crevice, and Microbiologically Influenced Corrosion, and Fouling	Fire Water System	VII.G-24	3.3.1-68	A
Fire Hydrant	Pressure Boundary	Gray Cast Iron	Raw Water (Internal)	Loss of Material/Selective Leaching	Selective Leaching of Materials	VII.G-14	3.3.1-85	A
Fire Hydrant	Pressure Boundary	Gray Cast Iron	Soil (External)	Loss of Material/General, Pitting, Crevice, and Microbiologically Influenced Corrosion	Buried Piping Inspection	VII.G-25	3.3.1-19	A
Fire Hydrant	Pressure Boundary	Gray Cast Iron	Soil (External)	Loss of Material/Selective Leaching	Selective Leaching of Materials	VII.G-15	3.3.1-85	A
Flame Arrestor	Pressure Boundary	Aluminum	Air - Outdoor	Loss of Material/Pitting and Crevice Corrosion	Periodic Inspection	III.B2-7	3.5.1-50	E, 13

Table 3.3.2-10 Fire Protection System (Continued)

Component Type	Intended Function	Material	Environment	Aging Effect Requiring Management	Aging Management Programs	NUREG-1801 Vol. 2 Item	Table 1 Item	Notes
Flow Element	Pressure Boundary	Stainless Steel	Air - Indoor (External)	None	None	VII.J-15	3.3.1-94	A
Flow Element	Pressure Boundary	Stainless Steel	Raw Water (Internal)	Loss of Material/Pitting, Crevice, and Microbiologically Influenced Corrosion, and Fouling	Fire Water System	V.C-3	3.2.1-38	E, 5
Gas Bottles (Halon)	Pressure Boundary	Carbon Steel	Air - Indoor (External)	Loss of Material/General Corrosion	External Surfaces Monitoring	VII.I-8	3.3.1-58	A
Gas Bottles (Halon)	Pressure Boundary	Carbon Steel	Air - Indoor (External)	Loss of Material/General Corrosion	Fire Protection	VII.I-8	3.3.1-58	E, 15
Gas Bottles (Halon)	Pressure Boundary	Carbon Steel	Air/Gas - Dry (Internal)	None	None	VII.J-23	3.3.1-97	C
Hose Manifold	Pressure Boundary	Gray Cast Iron	Air - Outdoor (External)	Loss of Material/General, Pitting and Crevice Corrosion	External Surfaces Monitoring	VII.H1-8	3.3.1-60	A
Hose Manifold	Pressure Boundary	Gray Cast Iron	Air - Outdoor (External)	Loss of Material/General, Pitting and Crevice Corrosion	Fire Water System	VII.H1-8	3.3.1-60	E, 12
Hose Manifold	Pressure Boundary	Gray Cast Iron	Raw Water (Internal)	Loss of Material/General, Pitting, Crevice, and Microbiologically Influenced Corrosion, and Fouling	Fire Water System	VII.G-24	3.3.1-68	A
Hose Manifold	Pressure Boundary	Gray Cast Iron	Raw Water (Internal)	Loss of Material/Selective Leaching	Selective Leaching of Materials	VII.G-14	3.3.1-85	A
Hoses	Pressure Boundary	Copper Alloy with less than 15% Zinc	Air - Outdoor (External)	Loss of Material/Pitting and Crevice Corrosion	Fire Protection			G, 11
Hoses	Pressure Boundary	Copper Alloy with less than 15% Zinc	Fuel Oil (Internal)	Loss of Material/Pitting, Crevice, and Microbiologically Influenced Corrosion	Fuel Oil Chemistry	VII.G-10	3.3.1-32	B
Hoses	Pressure Boundary	Copper Alloy with less than 15% Zinc	Fuel Oil (Internal)	Loss of Material/Pitting, Crevice, and Microbiologically Influenced Corrosion	One-Time Inspection	VII.G-10	3.3.1-32	A

Table 3.3.2-10 Fire Protection System (Continued)

Component Type	Intended Function	Material	Environment	Aging Effect Requiring Management	Aging Management Programs	NUREG-1801 Vol. 2 Item	Table 1 Item	Notes
Hoses	Pressure Boundary	Polymer	Air - Indoor (External)	None	None			F, 18
Hoses	Pressure Boundary	Polymer	Air/Gas - Wetted (Internal)	None	None			F, 18
Odorizer	Pressure Boundary	Carbon Steel	Air - Indoor (External)	Loss of Material/General Corrosion	External Surfaces Monitoring	VII.D-3	3.3.1-57	A
Odorizer	Pressure Boundary	Carbon Steel	Air - Indoor (External)	Loss of Material/General Corrosion	Fire Protection	VII.D-3	3.3.1-57	E, 15
Odorizer	Pressure Boundary	Carbon Steel	Air/Gas - Wetted (Internal)	Loss of Material/General, Pitting and Crevice Corrosion	Fire Protection	VII.G-23	3.3.1-71	E, 1
Piping and Fittings	Pressure Boundary	Carbon Steel	Air - Indoor (External)	Loss of Material/General Corrosion	External Surfaces Monitoring	VII.D-3	3.3.1-57	A
Piping and Fittings	Pressure Boundary	Carbon Steel	Air - Indoor (External)	Loss of Material/General Corrosion	Fire Protection	VII.D-3	3.3.1-57	E, 15
Piping and Fittings	Pressure Boundary	Carbon Steel	Air - Indoor (External)	Loss of Material/General Corrosion	Fire Water System	VII.D-3	3.3.1-57	E, 12
Piping and Fittings	Pressure Boundary	Carbon Steel	Air - Outdoor (External)	Loss of Material/General, Pitting and Crevice Corrosion	External Surfaces Monitoring	VII.H1-8	3.3.1-60	A
Piping and Fittings	Pressure Boundary	Carbon Steel	Air - Outdoor (External)	Loss of Material/General, Pitting and Crevice Corrosion	Fire Protection	VII.H1-8	3.3.1-60	E, 15
Piping and Fittings	Pressure Boundary	Carbon Steel	Air - Outdoor (External)	Loss of Material/General, Pitting and Crevice Corrosion	Fire Water System	VII.H1-8	3.3.1-60	E, 12
Piping and Fittings	Pressure Boundary	Carbon Steel	Air/Gas - Wetted (Internal)	Loss of Material/General, Pitting and Crevice Corrosion	Fire Protection	VII.G-23	3.3.1-71	E, 1
Piping and Fittings	Pressure Boundary	Carbon Steel	Raw Water (Internal)	Loss of Material/General, Pitting, Crevice, Galvanic, and Microbiologically Influenced Corrosion, and Fouling	Fire Water System	VII.C1-5	3.3.1-77	E, 5

Table 3.3.2-10 Fire Protection System (Continued)

Component Type	Intended Function	Material	Environment	Aging Effect Requiring Management	Aging Management Programs	NUREG-1801 Vol. 2 Item	Table 1 Item	Notes
Piping and Fittings	Pressure Boundary	Carbon Steel	Soil (External)	Loss of Material/General, Pitting, Crevice, and Microbiologically Influenced Corrosion	Buried Piping Inspection	VII.G-25	3.3.1-19	A
Piping and Fittings	Pressure Boundary	Copper Alloy with 15% Zinc or More	Air - Indoor (External)	None	None	V.F-3	3.2.1-53	A
Piping and Fittings	Pressure Boundary	Copper Alloy with 15% Zinc or More	Raw Water (Internal)	Loss of Material/Pitting, Crevice, and Microbiologically Influenced Corrosion, and Fouling	Fire Water System	VII.G-12	3.3.1-70	A
Piping and Fittings	Pressure Boundary	Copper Alloy with 15% Zinc or More	Raw Water (Internal)	Loss of Material/Selective Leaching	Selective Leaching of Materials	VII.G-13	3.3.1-84	A
Piping and Fittings	Pressure Boundary	Copper Alloy with less than 15% Zinc	Air - Indoor (External)	None	None	V.F-3	3.2.1-53	A
Piping and Fittings	Pressure Boundary	Copper Alloy with less than 15% Zinc	Air - Outdoor (External)	Loss of Material/Pitting and Crevice Corrosion	Fire Protection			G, 11
Piping and Fittings	Pressure Boundary	Copper Alloy with less than 15% Zinc	Fuel Oil (Internal)	Loss of Material/Pitting, Crevice, and Microbiologically Influenced Corrosion	Fuel Oil Chemistry	VII.G-10	3.3.1-32	B
Piping and Fittings	Pressure Boundary	Copper Alloy with less than 15% Zinc	Fuel Oil (Internal)	Loss of Material/Pitting, Crevice, and Microbiologically Influenced Corrosion	One-Time Inspection	VII.G-10	3.3.1-32	A
Piping and Fittings	Pressure Boundary	Ductile Cast Iron	Air - Indoor (External)	Loss of Material/General Corrosion	External Surfaces Monitoring	VII.D-3	3.3.1-57	A
Piping and Fittings	Pressure Boundary	Ductile Cast Iron	Air - Indoor (External)	Loss of Material/General Corrosion	Fire Water System	VII.D-3	3.3.1-57	E, 12
Piping and Fittings	Pressure Boundary	Ductile Cast Iron	Air - Outdoor (External)	Loss of Material/General, Pitting and Crevice Corrosion	External Surfaces Monitoring	VII.H1-8	3.3.1-60	A

Table 3.3.2-10 Fire Protection System (Continued)

Component Type	Intended Function	Material	Environment	Aging Effect Requiring Management	Aging Management Programs	NUREG-1801 Vol. 2 Item	Table 1 Item	Notes
Piping and Fittings	Pressure Boundary	Ductile Cast Iron	Air - Outdoor (External)	Loss of Material/General, Pitting and Crevice Corrosion	Fire Water System	VII.H1-8	3.3.1-60	E, 12
Piping and Fittings	Pressure Boundary	Ductile Cast Iron	Raw Water (Internal)	Loss of Material/General, Pitting, Crevice, and Microbiologically Influenced Corrosion, and Fouling	Fire Water System	VII.G-24	3.3.1-68	A
Piping and Fittings	Pressure Boundary	Ductile Cast Iron	Soil (External)	Loss of Material/General, Pitting, Crevice, and Microbiologically Influenced Corrosion	Buried Piping Inspection	VII.G-25	3.3.1-19	A
Piping and Fittings	Pressure Boundary	Galvanized Steel	Air - Indoor (External)	None	None	VII.J-6	3.3.1-92	A
Piping and Fittings	Pressure Boundary	Galvanized Steel	Air - Outdoor (External)	Loss of Material/General, Pitting and Crevice Corrosion	External Surfaces Monitoring	VII.H1-8	3.3.1-60	A
Piping and Fittings	Pressure Boundary	Galvanized Steel	Air - Outdoor (External)	Loss of Material/General, Pitting and Crevice Corrosion	Fire Water System	VII.H1-8	3.3.1-60	E, 12
Piping and Fittings	Pressure Boundary	Galvanized Steel	Air/Gas - Wetted (Internal)	Loss of Material/General, Pitting and Crevice Corrosion	Fire Protection	VII.G-23	3.3.1-71	E, 1
Piping and Fittings	Pressure Boundary	Galvanized Steel	Fuel Oil (Internal)	Loss of Material/General, Pitting, Crevice, and Microbiologically Influenced Corrosion, and Fouling	Fuel Oil Chemistry	VII.H1-10	3.3.1-20	B
Piping and Fittings	Pressure Boundary	Galvanized Steel	Fuel Oil (Internal)	Loss of Material/General, Pitting, Crevice, and Microbiologically Influenced Corrosion, and Fouling	One-Time Inspection	VII.H1-10	3.3.1-20	A

Table 3.3.2-10 Fire Protection System (Continued)

Component Type	Intended Function	Material	Environment	Aging Effect Requiring Management	Aging Management Programs	NUREG-1801 Vol. 2 Item	Table 1 Item	Notes
Piping and Fittings	Pressure Boundary	Galvanized Steel	Raw Water (Internal)	Loss of Material/General, Pitting, Crevice, and Microbiologically Influenced Corrosion, and Fouling	Fire Water System	VII.G-24	3.3.1-68	A
Piping and Fittings	Pressure Boundary	Galvanized Steel	Soil (External)	Loss of Material/General, Pitting, Crevice, and Microbiologically Influenced Corrosion	Buried Piping Inspection	VII.G-25	3.3.1-19	A
Piping and Fittings	Pressure Boundary	Gray Cast Iron	Air - Indoor (External)	Loss of Material/General Corrosion	External Surfaces Monitoring	VII.D-3	3.3.1-57	A
Piping and Fittings	Pressure Boundary	Gray Cast Iron	Air - Indoor (External)	Loss of Material/General Corrosion	Fire Water System	VII.D-3	3.3.1-57	E, 12
Piping and Fittings	Pressure Boundary	Gray Cast Iron	Air - Outdoor (External)	Loss of Material/General, Pitting and Crevice Corrosion	External Surfaces Monitoring	VII.H1-8	3.3.1-60	A
Piping and Fittings	Pressure Boundary	Gray Cast Iron	Air - Outdoor (External)	Loss of Material/General, Pitting and Crevice Corrosion	Fire Water System	VII.H1-8	3.3.1-60	E, 12
Piping and Fittings	Pressure Boundary	Gray Cast Iron	Raw Water (Internal)	Loss of Material/General, Pitting, Crevice, and Microbiologically Influenced Corrosion, and Fouling	Fire Water System	VII.G-24	3.3.1-68	A
Piping and Fittings	Pressure Boundary	Gray Cast Iron	Raw Water (Internal)	Loss of Material/Selective Leaching	Selective Leaching of Materials	VII.G-14	3.3.1-85	A
Piping and Fittings	Pressure Boundary	Gray Cast Iron	Soil (External)	Loss of Material/General, Pitting, Crevice, and Microbiologically Influenced Corrosion	Buried Piping Inspection	VII.G-25	3.3.1-19	A
Piping and Fittings	Pressure Boundary	Gray Cast Iron	Soil (External)	Loss of Material/Selective Leaching	Selective Leaching of Materials	VII.G-15	3.3.1-85	A
Piping and Fittings	Pressure Boundary	Stainless Steel	Air - Indoor (External)	None	None	VII.J-15	3.3.1-94	A

Table 3.3.2-10 Fire Protection System (Continued)

Component Type	Intended Function	Material	Environment	Aging Effect Requiring Management	Aging Management Programs	NUREG-1801 Vol. 2 Item	Table 1 Item	Notes
Piping and Fittings	Pressure Boundary	Stainless Steel	Raw Water (Internal)	Loss of Material/Pitting, Crevice, and Microbiologically Influenced Corrosion, and Fouling	Fire Water System	V.C-3	3.2.1-38	E, 5
Piping and Fittings	Pressure Boundary	Stainless Steel	Soil (External)	Loss of Material/Pitting, Crevice, and Microbiologically Influenced Corrosion	Buried Non-Steel Piping Inspection			H, 16
Pump Casing (Jockey Pump)	Pressure Boundary	Gray Cast Iron	Air - Indoor (External)	Loss of Material/General Corrosion	External Surfaces Monitoring	VII.D-3	3.3.1-57	A
Pump Casing (Jockey Pump)	Pressure Boundary	Gray Cast Iron	Air - Indoor (External)	Loss of Material/General Corrosion	Fire Water System	VII.D-3	3.3.1-57	E, 12
Pump Casing (Jockey Pump)	Pressure Boundary	Gray Cast Iron	Raw Water (Internal)	Loss of Material/General, Pitting, Crevice, and Microbiologically Influenced Corrosion, and Fouling	Fire Water System	VII.G-24	3.3.1-68	A
Pump Casing (Jockey Pump)	Pressure Boundary	Gray Cast Iron	Raw Water (Internal)	Loss of Material/Selective Leaching	Selective Leaching of Materials	VII.G-14	3.3.1-85	A
Pump Casing (Motor and Diesel Driven Fire Pumps)	Pressure Boundary	Gray Cast Iron	Air - Indoor (External)	Loss of Material/General Corrosion	External Surfaces Monitoring	VII.D-3	3.3.1-57	A
Pump Casing (Motor and Diesel Driven Fire Pumps)	Pressure Boundary	Gray Cast Iron	Air - Indoor (External)	Loss of Material/General Corrosion	Fire Water System	VII.D-3	3.3.1-57	E, 12
Pump Casing (Motor and Diesel Driven Fire Pumps)	Pressure Boundary	Gray Cast Iron	Raw Water (Internal)	Loss of Material/General, Pitting, Crevice, and Microbiologically Influenced Corrosion, and Fouling	Fire Water System	VII.G-24	3.3.1-68	A
Pump Casing (Motor and Diesel Driven Fire Pumps)	Pressure Boundary	Gray Cast Iron	Raw Water (Internal)	Loss of Material/Selective Leaching	Selective Leaching of Materials	VII.G-14	3.3.1-85	A

Table 3.3.2-10 Fire Protection System (Continued)

Component Type	Intended Function	Material	Environment	Aging Effect Requiring Management	Aging Management Programs	NUREG-1801 Vol. 2 Item	Table 1 Item	Notes
Restricting Orifices	Pressure Boundary	Copper Alloy with less than 15% Zinc	Air - Indoor (External)	None	None	V.F-3	3.2.1-53	A
Restricting Orifices	Pressure Boundary	Copper Alloy with less than 15% Zinc	Air/Gas - Wetted (Internal)	Loss of Material/Pitting and Crevice Corrosion	Fire Protection	VII.G-9	3.3.1-28	E, 2
Restricting Orifices	Throttle	Copper Alloy with less than 15% Zinc	Air - Indoor (External)	None	None	V.F-3	3.2.1-53	A
Restricting Orifices	Throttle	Copper Alloy with less than 15% Zinc	Air/Gas - Wetted (Internal)	Loss of Material/Pitting and Crevice Corrosion	Fire Protection	VII.G-9	3.3.1-28	E, 2
Spray Nozzles (Carbon Dioxide)	Spray	Stainless Steel	Air - Indoor (External)	None	None	VII.J-15	3.3.1-94	A
Spray Nozzles (Carbon Dioxide)	Spray	Stainless Steel	Air/Gas - Wetted (Internal)	Loss of Material/Pitting and Crevice Corrosion	Fire Protection	VII.D-4	3.3.1-54	E, 1
Spray Nozzles (Foam)	Spray	Carbon Steel	Air - Outdoor (External)	Loss of Material/General, Pitting and Crevice Corrosion	External Surfaces Monitoring	VII.H1-8	3.3.1-60	A
Spray Nozzles (Foam)	Spray	Carbon Steel	Air - Outdoor (External)	Loss of Material/General, Pitting and Crevice Corrosion	Fire Protection	VII.H1-8	3.3.1-60	E, 15
Spray Nozzles (Foam)	Spray	Carbon Steel	Air/Gas - Wetted (Internal)	Loss of Material/General, Pitting and Crevice Corrosion	Fire Protection	VII.G-23	3.3.1-71	E, 1
Spray Nozzles (Halon)	Spray	Stainless Steel	Air - Indoor (External)	None	None	VII.J-15	3.3.1-94	A
Spray Nozzles (Halon)	Spray	Stainless Steel	Air/Gas - Wetted (Internal)	Loss of Material/Pitting and Crevice Corrosion	Fire Protection	VII.D-4	3.3.1-54	E, 1
Sprinkler Heads	Pressure Boundary	Copper Alloy with less than 15% Zinc	Air - Indoor (External)	None	None	V.F-3	3.2.1-53	A

Table 3.3.2-10 Fire Protection System (Continued)

Component Type	Intended Function	Material	Environment	Aging Effect Requiring Management	Aging Management Programs	NUREG-1801 Vol. 2 Item	Table 1 Item	Notes
Sprinkler Heads	Pressure Boundary	Copper Alloy with less than 15% Zinc	Air - Outdoor (External)	Loss of Material/Pitting and Crevice Corrosion	Fire Water System			G, 17
Sprinkler Heads	Pressure Boundary	Copper Alloy with less than 15% Zinc	Air/Gas - Dry (Internal)	None	None	VII.J-3	3.3.1-98	A
Sprinkler Heads	Pressure Boundary	Copper Alloy with less than 15% Zinc	Air/Gas - Wetted (Internal)	Loss of Material/Pitting and Crevice Corrosion	Fire Water System	VII.G-9	3.3.1-28	E, 14
Sprinkler Heads	Pressure Boundary	Copper Alloy with less than 15% Zinc	Raw Water (Internal)	Loss of Material/Pitting, Crevice, and Microbiologically Influenced Corrosion, and Fouling	Fire Water System	VII.G-12	3.3.1-70	A
Sprinkler Heads	Spray	Copper Alloy with less than 15% Zinc	Air - Indoor (External)	None	None	V.F-3	3.2.1-53	A
Sprinkler Heads	Spray	Copper Alloy with less than 15% Zinc	Air - Outdoor (External)	Loss of Material/Pitting and Crevice Corrosion	Fire Water System			G, 17
Sprinkler Heads	Spray	Copper Alloy with less than 15% Zinc	Air/Gas - Dry (Internal)	None	None	VII.J-3	3.3.1-98	A
Sprinkler Heads	Spray	Copper Alloy with less than 15% Zinc	Air/Gas - Wetted (Internal)	Loss of Material/Pitting and Crevice Corrosion	Fire Water System	VII.G-9	3.3.1-28	E, 14
Sprinkler Heads	Spray	Copper Alloy with less than 15% Zinc	Raw Water (Internal)	Loss of Material/Pitting, Crevice, and Microbiologically Influenced Corrosion, and Fouling	Fire Water System	VII.G-12	3.3.1-70	A
Strainer	Filter	Copper Alloy with 15% Zinc or More	Raw Water (External)	Loss of Material/Pitting, Crevice, and Microbiologically Influenced Corrosion, and Fouling	Fire Water System	VII.G-12	3.3.1-70	A

Table 3.3.2-10 Fire Protection System (Continued)

Component Type	Intended Function	Material	Environment	Aging Effect Requiring Management	Aging Management Programs	NUREG-1801 Vol. 2 Item	Table 1 Item	Notes
Strainer	Filter	Copper Alloy with 15% Zinc or More	Raw Water (External)	Loss of Material/Selective Leaching	Selective Leaching of Materials	VII.G-13	3.3.1-84	A
Strainer	Filter	Copper Alloy with 15% Zinc or More	Raw Water (Internal)	Loss of Material/Pitting, Crevice, and Microbiologically Influenced Corrosion, and Fouling	Fire Water System	VII.G-12	3.3.1-70	A
Strainer	Filter	Copper Alloy with 15% Zinc or More	Raw Water (Internal)	Loss of Material/Selective Leaching	Selective Leaching of Materials	VII.G-13	3.3.1-84	A
Strainer (Fire Pump Suction Strainers)	Filter	Stainless Steel	Raw Water (External)	Loss of Material/Pitting, Crevice, and Microbiologically Influenced Corrosion, and Fouling	Fire Water System	V.C-3	3.2.1-38	E, 5
Strainer (Fire Pump Suction Strainers)	Filter	Stainless Steel	Raw Water (Internal)	Loss of Material/Pitting, Crevice, and Microbiologically Influenced Corrosion, and Fouling	Fire Water System	V.C-3	3.2.1-38	E, 5
Strainer (Fire Water Tank Silt Stop)	Filter	Carbon Steel	Raw Water (External)	Loss of Material/General, Pitting, Crevice, and Microbiologically Influenced Corrosion, and Fouling	Fire Water System	VII.G-24	3.3.1-68	A
Strainer (Fire Water Tank Silt Stop)	Filter	Carbon Steel	Raw Water (Internal)	Loss of Material/General, Pitting, Crevice, and Microbiologically Influenced Corrosion, and Fouling	Fire Water System	VII.G-24	3.3.1-68	A
Strainer Body	Pressure Boundary	Gray Cast Iron	Air - Indoor (External)	Loss of Material/General Corrosion	External Surfaces Monitoring	VII.D-3	3.3.1-57	A
Strainer Body	Pressure Boundary	Gray Cast Iron	Air - Indoor (External)	Loss of Material/General Corrosion	Fire Water System	VII.D-3	3.3.1-57	E, 12

Table 3.3.2-10 Fire Protection System (Continued)

Component Type	Intended Function	Material	Environment	Aging Effect Requiring Management	Aging Management Programs	NUREG-1801 Vol. 2 Item	Table 1 Item	Notes
Strainer Body	Pressure Boundary	Gray Cast Iron	Raw Water (Internal)	Loss of Material/General, Pitting, Crevice, and Microbiologically Influenced Corrosion, and Fouling	Fire Water System	VII.G-24	3.3.1-68	A
Strainer Body	Pressure Boundary	Gray Cast Iron	Raw Water (Internal)	Loss of Material/Selective Leaching	Selective Leaching of Materials	VII.G-14	3.3.1-85	A
Tanks (CO2- 17 Ton)	Pressure Boundary	Carbon Steel	Air - Outdoor (External)	Loss of Material/General, Pitting and Crevice Corrosion	Aboveground Steel Tanks	VII.H1-11	3.3.1-40	A
Tanks (CO2- 17 Ton)	Pressure Boundary	Carbon Steel	Air/Gas - Dry (Internal)	None	None	VII.J-23	3.3.1-97	C
Tanks (CO2- 4 Ton)	Pressure Boundary	Carbon Steel	Air - Indoor (External)	Loss of Material/General Corrosion	External Surfaces Monitoring	VII.I-8	3.3.1-58	A
Tanks (CO2- 4 Ton)	Pressure Boundary	Carbon Steel	Air/Gas - Dry (Internal)	None	None	VII.J-23	3.3.1-97	C
Tanks (Fire Diesel Fuel Oil)	Pressure Boundary	Carbon Steel	Air - Outdoor (External)	Loss of Material/General, Pitting and Crevice Corrosion	Aboveground Steel Tanks	VII.H1-11	3.3.1-40	A
Tanks (Fire Diesel Fuel Oil)	Pressure Boundary	Carbon Steel	Fuel Oil (Internal)	Loss of Material/General, Pitting, Crevice, and Microbiologically Influenced Corrosion, and Fouling	Fuel Oil Chemistry	VII.H1-10	3.3.1-20	B
Tanks (Fire Diesel Fuel Oil)	Pressure Boundary	Carbon Steel	Fuel Oil (Internal)	Loss of Material/General, Pitting, Crevice, and Microbiologically Influenced Corrosion, and Fouling	One-Time Inspection	VII.H1-10	3.3.1-20	A
Tanks (Fire Water)	Pressure Boundary	Carbon Steel	Air - Outdoor (External)	Loss of Material/General, Pitting and Crevice Corrosion	Aboveground Steel Tanks	VII.H1-11	3.3.1-40	A

Table 3.3.2-10 Fire Protection System (Continued)

Component Type	Intended Function	Material	Environment	Aging Effect Requiring Management	Aging Management Programs	NUREG-1801 Vol. 2 Item	Table 1 Item	Notes
Tanks (Fire Water)	Pressure Boundary	Carbon Steel	Raw Water (Internal)	Loss of Material/General, Pitting, Crevice, and Microbiologically Influenced Corrosion, and Fouling	Fire Water System	VII.G-24	3.3.1-68	C
Tanks (Fire Water)	Pressure Boundary	Carbon Steel	Soil (External)	Loss of Material/General, Pitting, Crevice, and Microbiologically Influenced Corrosion	Aboveground Steel Tanks	VII.G-25	3.3.1-19	E, 4
Tanks (Retarding Chambers)	Pressure Boundary	Gray Cast Iron	Air - Indoor (External)	Loss of Material/General Corrosion	External Surfaces Monitoring	VII.I-8	3.3.1-58	A
Tanks (Retarding Chambers)	Pressure Boundary	Gray Cast Iron	Air - Indoor (External)	Loss of Material/General Corrosion	Fire Water System	VII.I-8	3.3.1-58	E, 12
Tanks (Retarding Chambers)	Pressure Boundary	Gray Cast Iron	Raw Water (Internal)	Loss of Material/General, Pitting, Crevice, and Microbiologically Influenced Corrosion, and Fouling	Fire Water System	VII.G-24	3.3.1-68	C
Tanks (Retarding Chambers)	Pressure Boundary	Gray Cast Iron	Raw Water (Internal)	Loss of Material/Selective Leaching	Selective Leaching of Materials	VII.G-14	3.3.1-85	C
Thermowell	Pressure Boundary	Galvanized Steel	Air - Indoor (External)	None	None	VII.J-6	3.3.1-92	A
Thermowell	Pressure Boundary	Galvanized Steel	Air - Outdoor (External)	Loss of Material/General, Pitting and Crevice Corrosion	External Surfaces Monitoring	VII.H1-8	3.3.1-60	A
Thermowell	Pressure Boundary	Galvanized Steel	Air - Outdoor (External)	Loss of Material/General, Pitting and Crevice Corrosion	Fire Water System	VII.H1-8	3.3.1-60	E, 12
Thermowell	Pressure Boundary	Galvanized Steel	Raw Water (Internal)	Loss of Material/General, Pitting, Crevice, and Microbiologically Influenced Corrosion, and Fouling	Fire Water System	VII.G-24	3.3.1-68	A
Valve Body	Pressure Boundary	Carbon Steel	Air - Indoor (External)	Loss of Material/General Corrosion	External Surfaces Monitoring	VII.D-3	3.3.1-57	A

Table 3.3.2-10 Fire Protection System (Continued)

Component Type	Intended Function	Material	Environment	Aging Effect Requiring Management	Aging Management Programs	NUREG-1801 Vol. 2 Item	Table 1 Item	Notes
Valve Body	Pressure Boundary	Carbon Steel	Air - Indoor (External)	Loss of Material/General Corrosion	Fire Protection	VII.D-3	3.3.1-57	E, 15
Valve Body	Pressure Boundary	Carbon Steel	Air - Indoor (External)	Loss of Material/General Corrosion	Fire Water System	VII.D-3	3.3.1-57	E, 12
Valve Body	Pressure Boundary	Carbon Steel	Air - Outdoor (External)	Loss of Material/General, Pitting and Crevice Corrosion	External Surfaces Monitoring	VII.H1-8	3.3.1-60	A
Valve Body	Pressure Boundary	Carbon Steel	Air - Outdoor (External)	Loss of Material/General, Pitting and Crevice Corrosion	Fire Protection	VII.H1-8	3.3.1-60	E, 15
Valve Body	Pressure Boundary	Carbon Steel	Air - Outdoor (External)	Loss of Material/General, Pitting and Crevice Corrosion	Fire Water System	VII.H1-8	3.3.1-60	E, 12
Valve Body	Pressure Boundary	Carbon Steel	Air/Gas - Dry (Internal)	None	None	VII.J-23	3.3.1-97	A
Valve Body	Pressure Boundary	Carbon Steel	Fuel Oil (Internal)	Loss of Material/General, Pitting, Crevice, and Microbiologically Influenced Corrosion, and Fouling	Fuel Oil Chemistry	VII.H1-10	3.3.1-20	B
Valve Body	Pressure Boundary	Carbon Steel	Fuel Oil (Internal)	Loss of Material/General, Pitting, Crevice, and Microbiologically Influenced Corrosion, and Fouling	One-Time Inspection	VII.H1-10	3.3.1-20	A
Valve Body	Pressure Boundary	Carbon Steel	Raw Water (Internal)	Loss of Material/General, Pitting, Crevice, and Microbiologically Influenced Corrosion, and Fouling	Fire Water System	VII.G-24	3.3.1-68	A
Valve Body	Pressure Boundary	Copper Alloy with 15% Zinc or More	Air - Indoor (External)	None	None	V.F-3	3.2.1-53	A

Table 3.3.2-10 Fire Protection System (Continued)

Component Type	Intended Function	Material	Environment	Aging Effect Requiring Management	Aging Management Programs	NUREG-1801 Vol. 2 Item	Table 1 Item	Notes
Valve Body	Pressure Boundary	Copper Alloy with 15% Zinc or More	Raw Water (Internal)	Loss of Material/Pitting, Crevice, and Microbiologically Influenced Corrosion, and Fouling	Fire Water System	VII.G-12	3.3.1-70	A
Valve Body	Pressure Boundary	Copper Alloy with 15% Zinc or More	Raw Water (Internal)	Loss of Material/Selective Leaching	Selective Leaching of Materials	VII.G-13	3.3.1-84	A
Valve Body	Pressure Boundary	Copper Alloy with less than 15% Zinc	Air - Indoor (External)	None	None	V.F-3	3.2.1-53	A
Valve Body	Pressure Boundary	Copper Alloy with less than 15% Zinc	Air - Outdoor (External)	Loss of Material/Pitting and Crevice Corrosion	Fire Protection			G, 11
Valve Body	Pressure Boundary	Copper Alloy with less than 15% Zinc	Air - Outdoor (External)	Loss of Material/Pitting and Crevice Corrosion	Fire Water System			G, 17
Valve Body	Pressure Boundary	Copper Alloy with less than 15% Zinc	Fuel Oil (Internal)	Loss of Material/Pitting, Crevice, and Microbiologically Influenced Corrosion	Fuel Oil Chemistry	VII.G-10	3.3.1-32	B
Valve Body	Pressure Boundary	Copper Alloy with less than 15% Zinc	Fuel Oil (Internal)	Loss of Material/Pitting, Crevice, and Microbiologically Influenced Corrosion	One-Time Inspection	VII.G-10	3.3.1-32	A
Valve Body	Pressure Boundary	Copper Alloy with less than 15% Zinc	Raw Water (Internal)	Loss of Material/Pitting, Crevice, and Microbiologically Influenced Corrosion, and Fouling	Fire Water System	VII.G-12	3.3.1-70	A
Valve Body	Pressure Boundary	Gray Cast Iron	Air - Indoor (External)	Loss of Material/General Corrosion	External Surfaces Monitoring	VII.D-3	3.3.1-57	A
Valve Body	Pressure Boundary	Gray Cast Iron	Air - Indoor (External)	Loss of Material/General Corrosion	Fire Water System	VII.D-3	3.3.1-57	E, 12

Table 3.3.2-10 Fire Protection System (Continued)

Component Type	Intended Function	Material	Environment	Aging Effect Requiring Management	Aging Management Programs	NUREG-1801 Vol. 2 Item	Table 1 Item	Notes
Valve Body	Pressure Boundary	Gray Cast Iron	Air - Outdoor (External)	Loss of Material/General, Pitting and Crevice Corrosion	External Surfaces Monitoring	VII.H1-8	3.3.1-60	A
Valve Body	Pressure Boundary	Gray Cast Iron	Air - Outdoor (External)	Loss of Material/General, Pitting and Crevice Corrosion	Fire Water System	VII.H1-8	3.3.1-60	E, 12
Valve Body	Pressure Boundary	Gray Cast Iron	Raw Water (Internal)	Loss of Material/General, Pitting, Crevice, and Microbiologically Influenced Corrosion, and Fouling	Fire Water System	VII.G-24	3.3.1-68	A
Valve Body	Pressure Boundary	Gray Cast Iron	Raw Water (Internal)	Loss of Material/Selective Leaching	Selective Leaching of Materials	VII.G-14	3.3.1-85	A
Valve Body	Pressure Boundary	Gray Cast Iron	Soil (External)	Loss of Material/General, Pitting, Crevice, and Microbiologically Influenced Corrosion	Buried Piping Inspection	VII.G-25	3.3.1-19	A
Valve Body	Pressure Boundary	Gray Cast Iron	Soil (External)	Loss of Material/Selective Leaching	Selective Leaching of Materials	VII.G-15	3.3.1-85	A
Valve Body	Pressure Boundary	Stainless Steel	Air - Indoor (External)	None	None	VII.J-15	3.3.1-94	A
Valve Body	Pressure Boundary	Stainless Steel	Raw Water (Internal)	Loss of Material/Pitting, Crevice, and Microbiologically Influenced Corrosion, and Fouling	Fire Water System	V.C-3	3.2.1-38	E, 5

Notes	Definition of Note
A	Consistent with NUREG-1801 item for component, material, environment, and aging effect. AMP is consistent with NUREG-1801 AMP.
B	Consistent with NUREG-1801 item for component, material, environment, and aging effect. AMP takes some exceptions to NUREG-1801 AMP.
C	Component is different, but consistent with NUREG-1801 item for material, environment, and aging effect. AMP is consistent with NUREG-1801 AMP.
D	Component is different, but consistent with NUREG-1801 item for material, environment, and aging effect. AMP takes some exceptions to NUREG-1801 AMP.
E	Consistent with NUREG-1801 item for material, environment and aging effect, but a different aging management program is credited or NUREG-1801 identifies a plant-specific aging management program.
F	Material not in NUREG-1801 for this component.
G	Environment not in NUREG-1801 for this component and material.
H	Aging effect not in NUREG-1801 for this component, material and environment combination.
I	Aging effect in NUREG-1801 for this component, material and environment combination is not applicable.
J	Neither the component nor the material and environment combination is evaluated in NUREG-1801.

Plant Specific Notes:

1. The Fire Protection program is substituted to manage the aging effect(s) applicable to this component type, material, and environment combination.

2. NUREG-1801 specifies a plant-specific program. The Fire Protection program is used to manage the aging effect(s) applicable to this component type, material, and environment combination.

3. The aging effects for closure bolting in a soil environment include loss of material and loss of preload. External inspections of buried bolting will occur in accordance with the frequency outlined in the Buried Piping Inspection Program and the Buried Non-Steel Piping Inspection Program.

4. The Aboveground Steel Tanks program is substituted to manage the aging effect(s) applicable to this component, material and environment combination.

5. The Fire Water System program is substituted to manage the aging effect(s) applicable to this component type, material, and environment combination.

6. The Fire Protection aging management program will be used in addition to the Structures Monitoring Program.

7. Masonry walls are inspected as a part of the Structures Monitoring Program, which includes the ten attributes of NUREG-1801 Masonry Wall Program (XI.S5).

8. Based on industry standards and guidelines, grout is susceptible to cracking due to shrinkage in this environment. Even though shrinkage cracking occurs early in plant life and is not expected to be significant for the extended period of operation, the aging effect will be monitored and managed with the Fire Protection and Structures Monitoring Programs.

9. The aging effects and Aging Management program identified for this material/environment combination are consistent with industry guidance.

10. The aging mechanisms of aggressive chemical attack and reaction with aggregate for this component, material and environment combination are not applicable.

11. The Fire Protection aging management program will be used to manage the identified aging effects for this component, material and environment combination.

12. The Fire Water System aging management program will be used in addition to the External Surfaces Monitoring aging management program.

13. The Periodic Inspection program is substituted to manage the aging effect(s) applicable to this component type, material, and environment combination.

14. NUREG-1801 specifies a plant-specific program. The Fire Water System aging management program is used to manage the aging effect(s) applicable to this component type, material, and environment combination.

15. The Fire Protection aging management program will be used in addition to the External Surfaces Monitoring aging management program.

16. The Buried Non-Steel Piping Inspection aging management program will be used to manage the identified aging effects for this component, material and environment combination.

17. The Fire Water System aging management program will be used to manage the identified aging effects for this component, material and environment combination.

18. The polymer (plexiglass) material located indoors and subject to an indoor air or air-gas (wetted) environment is not subject to significant aging effects. Polymer materials do not experience aging effects unless exposed to temperatures, radiation or chemicals capable of attacking the specific polymer chemical composition. Polymer materials are selected for compatibility with the environment during the design, and if properly selected will not experience significant degradation. Polymer (teflon) material in this non-aggressive air environment is not expected to experience significant aging effects. This is consistent with plant operating experience.

Table 3.3.2-11
Fire Pump House Ventilation System
Summary of Aging Management Evaluation

Table 3.3.2-11 Fire Pump House Ventilation System

Component Type	Intended Function	Material	Environment	Aging Effect Requiring Management	Aging Management Programs	NUREG-1801 Vol. 2 Item	Table 1 Item	Notes
Fan Housing	Pressure Boundary	Carbon Steel	Air - Outdoor (External)	Loss of Material/General, Pitting and Crevice Corrosion	External Surfaces Monitoring	VII.H1-8	3.3.1-60	C
Fan Housing	Pressure Boundary	Carbon Steel	Air/Gas - Wetted (Internal)	Loss of Material/General, Pitting and Crevice Corrosion	Inspection of Internal Surfaces in Miscellaneous Piping and Ducting Components	VII.F1-3	3.3.1-72	A
Louver	Pressure Boundary	Aluminum	Air - Outdoor (External)	Loss of Material/Pitting and Crevice Corrosion	Structures Monitoring Program	III.B2-7	3.5.1-50	C
Louver	Pressure Boundary	Aluminum	Air/Gas - Wetted (Internal)	Loss of Material/Pitting and Crevice Corrosion	Periodic Inspection	VII.F1-14	3.3.1-27	E, 1

Notes	Definition of Note
A	Consistent with NUREG-1801 item for component, material, environment, and aging effect. AMP is consistent with NUREG-1801 AMP.
B	Consistent with NUREG-1801 item for component, material, environment, and aging effect. AMP takes some exceptions to NUREG-1801 AMP.
C	Component is different, but consistent with NUREG-1801 item for material, environment, and aging effect. AMP is consistent with NUREG-1801 AMP.
D	Component is different, but consistent with NUREG-1801 item for material, environment, and aging effect. AMP takes some exceptions to NUREG-1801 AMP.
E	Consistent with NUREG-1801 item for material, environment and aging effect, but a different aging management program is credited or NUREG-1801 identifies a plant-specific aging management program.
F	Material not in NUREG-1801 for this component.
G	Environment not in NUREG-1801 for this component and material.
H	Aging effect not in NUREG-1801 for this component, material and environment combination.
I	Aging effect in NUREG-1801 for this component, material and environment combination is not applicable.
J	Neither the component nor the material and environment combination is evaluated in NUREG-1801.

Plant Specific Notes:

1. NUREG-1801 specifies a plant-specific program. The Periodic Inspection program is used to manage the aging effect(s) applicable to this component type, material, and environment combination.

Table 3.3.2-12
Fresh Water Supply System
Summary of Aging Management Evaluation

Table 3.3.2-12 Fresh Water Supply System

Component Type	Intended Function	Material	Environment	Aging Effect Requiring Management	Aging Management Programs	NUREG-1801 Vol. 2 Item	Table 1 Item	Notes
Bolting	Mechanical Closure	Carbon and Low Alloy Steel Bolting	Air - Indoor (External)	Loss of Material/General, Pitting and Crevice Corrosion	Bolting Integrity	VII.I-4	3.3.1-43	B
Bolting	Mechanical Closure	Carbon and Low Alloy Steel Bolting	Air - Indoor (External)	Loss of Preload/Thermal Effects, Gasket Creep, and Self-Loosening	Bolting Integrity	VII.I-5	3.3.1-45	B
Piping and Fittings	Leakage Boundary	Carbon Steel	Air - Indoor (External)	Loss of Material/General Corrosion	External Surfaces Monitoring	VII.D-3	3.3.1-57	A
Piping and Fittings	Leakage Boundary	Carbon Steel	Raw Water (Internal)	Loss of Material/General, Pitting, Crevice, Galvanic, and Microbiologically Influenced Corrosion, and Fouling	Inspection of Internal Surfaces in Miscellaneous Piping and Ducting Components	VII.C1-5	3.3.1-77	E, 1
Piping and Fittings	Leakage Boundary	Copper Alloy with less than 15% Zinc	Air - Indoor (External)	None	None	V.F-3	3.2.1-53	A
Piping and Fittings	Leakage Boundary	Copper Alloy with less than 15% Zinc	Raw Water (Internal)	Loss of Material/Pitting, Crevice, and Microbiologically Influenced Corrosion, and Fouling	Periodic Inspection	VII.C1-9	3.3.1-81	E, 2
Piping and Fittings	Leakage Boundary	Ductile Cast Iron	Air - Indoor (External)	Loss of Material/General Corrosion	External Surfaces Monitoring	VII.D-3	3.3.1-57	A
Piping and Fittings	Leakage Boundary	Ductile Cast Iron	Raw Water (Internal)	Loss of Material/General, Pitting, Crevice, Galvanic, and Microbiologically Influenced Corrosion, and Fouling	Inspection of Internal Surfaces in Miscellaneous Piping and Ducting Components	VII.C1-5	3.3.1-77	E, 1
Piping and Fittings	Leakage Boundary	Stainless Steel	Air - Indoor (External)	None	None	VII.J-15	3.3.1-94	A

Table 3.3.2-12 Fresh Water Supply System (Continued)

Component Type	Intended Function	Material	Environment	Aging Effect Requiring Management	Aging Management Programs	NUREG-1801 Vol. 2 Item	Table 1 Item	Notes
Piping and Fittings	Leakage Boundary	Stainless Steel	Raw Water (Internal)	Loss of Material/Pitting, Crevice, and Microbiologically Influenced Corrosion, and Fouling	Periodic Inspection	VIII.E-3	3.4.1-33	E, 2
Valve Body	Leakage Boundary	Copper Alloy with less than 15% Zinc	Air - Indoor (External)	None	None	V.F-3	3.2.1-53	A
Valve Body	Leakage Boundary	Copper Alloy with less than 15% Zinc	Raw Water (Internal)	Loss of Material/Pitting, Crevice, and Microbiologically Influenced Corrosion, and Fouling	Periodic Inspection	VII.C1-9	3.3.1-81	E, 2
Valve Body	Leakage Boundary	Gray Cast Iron	Air - Indoor (External)	Loss of Material/General Corrosion	External Surfaces Monitoring	VII.D-3	3.3.1-57	A
Valve Body	Leakage Boundary	Gray Cast Iron	Raw Water (Internal)	Loss of Material/General, Pitting, Crevice, and Microbiologically Influenced Corrosion, and Fouling	Inspection of Internal Surfaces in Miscellaneous Piping and Ducting Components	VII.G-24	3.3.1-68	E, 1
Valve Body	Leakage Boundary	Gray Cast Iron	Raw Water (Internal)	Loss of Material/Selective Leaching	Selective Leaching of Materials	VII.C1-11	3.3.1-85	A

Notes	Definition of Note
A	Consistent with NUREG-1801 item for component, material, environment, and aging effect. AMP is consistent with NUREG-1801 AMP.
B	Consistent with NUREG-1801 item for component, material, environment, and aging effect. AMP takes some exceptions to NUREG-1801 AMP.
C	Component is different, but consistent with NUREG-1801 item for material, environment, and aging effect. AMP is consistent with NUREG-1801 AMP.
D	Component is different, but consistent with NUREG-1801 item for material, environment, and aging effect. AMP takes some exceptions to NUREG-1801 AMP.
E	Consistent with NUREG-1801 item for material, environment and aging effect, but a different aging management program is credited or NUREG-1801 identifies a plant-specific aging management program.
F	Material not in NUREG-1801 for this component.
G	Environment not in NUREG-1801 for this component and material.
H	Aging effect not in NUREG-1801 for this component, material and environment combination.
I	Aging effect in NUREG-1801 for this component, material and environment combination is not applicable.
J	Neither the component nor the material and environment combination is evaluated in NUREG-1801.

Plant Specific Notes:

1. The Inspection of Internal Surfaces in Miscellaneous Piping and Ducting Components program is substituted to manage the aging effect(s) applicable to this component type, material, and environment combination.

2. The Periodic Inspection program is substituted to manage the aging effect(s) applicable to this component type, material, and environment combination

Table 3.3.2-13
Fuel Handling and Storage System
Summary of Aging Management Evaluation

Table 3.3.2-13 Fuel Handling and Storage System

Component Type	Intended Function	Material	Environment	Aging Effect Requiring Management	Aging Management Programs	NUREG-1801 Vol. 2 Item	Table 1 Item	Notes
Bolting	Structural Support	Carbon and Low Alloy Steel Bolting	Air - Indoor (External)	Loss of Material/General, Pitting and Crevice Corrosion	Inspection of Overhead Heavy Load and Light Load (Related to Refueling) Handling Systems	VII.I-4	3.3.1-43	E, 1
Bolting	Structural Support	Carbon and Low Alloy Steel Bolting	Air - Indoor (External)	Loss of Preload/Self-Loosening	Inspection of Overhead Heavy Load and Light Load (Related to Refueling) Handling Systems	VII.I-5	3.3.1-45	E, 1, 2
Bolting	Structural Support	Stainless Steel Bolting	Air - Indoor (External)	Loss of Preload/Self-Loosening	Inspection of Overhead Heavy Load and Light Load (Related to Refueling) Handling Systems	IV.C2-8	3.1.1-52	E, 1, 2
Crane/hoist (Fuel Preparation Machine and New Fuel Inspection Stand)	Structural Support	Aluminum	Air - Indoor (External)	None	None	V.F-2	3.2.1-50	C
Crane/hoist (Fuel Preparation Machine and New Fuel Inspection Stand)	Structural Support	Aluminum	Treated Water (External)	Loss of Material/Pitting and Crevice Corrosion	One-Time Inspection	VII.A4-5	3.3.1-24	C
Crane/hoist (Fuel Preparation Machine and New Fuel Inspection Stand)	Structural Support	Aluminum	Treated Water (External)	Loss of Material/Pitting and Crevice Corrosion	Water Chemistry	VII.A4-5	3.3.1-24	D

Table 3.3.2-13 Fuel Handling and Storage System (Continued)

Component Type	Intended Function	Material	Environment	Aging Effect Requiring Management	Aging Management Programs	NUREG-1801 Vol. 2 Item	Table 1 Item	Notes
Crane/hoist (Fuel Preparation Machine and New Fuel Inspection Stand)	Structural Support	Stainless Steel	Air - Indoor (External)	None	None	VII.J-15	3.3.1-94	C
Crane/hoist (Fuel Preparation Machine and New Fuel Inspection Stand)	Structural Support	Stainless Steel	Treated Water (External)	Loss of Material/Pitting and Crevice Corrosion	One-Time Inspection	VII.A4-11	3.3.1-24	C
Crane/hoist (Fuel Preparation Machine and New Fuel Inspection Stand)	Structural Support	Stainless Steel	Treated Water (External)	Loss of Material/Pitting and Crevice Corrosion	Water Chemistry	VII.A4-11	3.3.1-24	D
Crane/hoist (Grapple/Mast for all bridges)	Structural Support	Carbon Steel	Air - Indoor (External)	Loss of Material/General Corrosion	Inspection of Overhead Heavy Load and Light Load (Related to Refueling) Handling Systems	VII.B-3	3.3.1-73	C
Crane/hoist (Grapple/Mast for all bridges)	Structural Support	Carbon Steel	Treated Water (External)	Loss of Material/General, Pitting and Crevice Corrosion	One-Time Inspection	VII.E3-18	3.3.1-17	C
Crane/hoist (Grapple/Mast for all bridges)	Structural Support	Carbon Steel	Treated Water (External)	Loss of Material/General, Pitting and Crevice Corrosion	Water Chemistry	VII.E3-18	3.3.1-17	D
Crane/hoist (Grapple/Mast for all bridges)	Structural Support	Stainless Steel	Air - Indoor (External)	None	None	VII.J-15	3.3.1-94	C
Crane/hoist (Grapple/Mast for all bridges)	Structural Support	Stainless Steel	Treated Water (External)	Loss of Material/Pitting and Crevice Corrosion	One-Time Inspection	VII.A4-11	3.3.1-24	C
Crane/hoist (Grapple/Mast for all bridges)	Structural Support	Stainless Steel	Treated Water (External)	Loss of Material/Pitting and Crevice Corrosion	Water Chemistry	VII.A4-11	3.3.1-24	D

Table 3.3.2-13 Fuel Handling and Storage System (Continued)

Component Type	Intended Function	Material	Environment	Aging Effect Requiring Management	Aging Management Programs	NUREG-1801 Vol. 2 Item	Table 1 Item	Notes
Crane/hoist (Rail System)	Structural Support	Carbon Steel	Air - Indoor (External)	Loss of Material/General Corrosion	Inspection of Overhead Heavy Load and Light Load (Related to Refueling) Handling Systems	VII.B-3	3.3.1-73	C
Crane/hoist (Rail System)	Structural Support	Carbon Steel	Air - Indoor (External)	Loss of Material/Wear	Inspection of Overhead Heavy Load and Light Load (Related to Refueling) Handling Systems	VII.B-1	3.3.1-74	A
Crane/hoist (Refueling Platform and Jib Crane Columns / Beams / Plates / Anchorage)	Structural Support	Carbon Steel	Air - Indoor (External)	Loss of Material/General Corrosion	Inspection of Overhead Heavy Load and Light Load (Related to Refueling) Handling Systems	VII.B-3	3.3.1-73	C
Fuel Storage Racks (irradiated fuel)	Absorb Neutrons	Boral	Treated Water (External)	Reduction of Neutron-Absorbing Capacity and Loss of Material/General Corrosion	Boral Monitoring	VII.A2-3	3.3.1-13	E, 3
Fuel Storage Racks (irradiated fuel)	Absorb Neutrons	Boral	Treated Water (External)	Reduction of Neutron-Absorbing Capacity and Loss of Material/General Corrosion	Water Chemistry	VII.A2-3	3.3.1-13	E, 4
Fuel Storage Racks (irradiated fuel)	Structural Support	Stainless Steel	Treated Water (External)	Loss of Material/Pitting and Crevice Corrosion	Water Chemistry	III.A5-13	3.5.1-46	D
Fuel Storage Racks (new fuel racks)	Structural Support	Aluminum	Air - Indoor (External)	None	None	V.F-2	3.2.1-50	C

Notes	Definition of Note
A	Consistent with NUREG-1801 item for component, material, environment, and aging effect. AMP is consistent with NUREG-1801 AMP.
B	Consistent with NUREG-1801 item for component, material, environment, and aging effect. AMP takes some exceptions to NUREG-1801 AMP.
C	Component is different, but consistent with NUREG-1801 item for material, environment, and aging effect. AMP is consistent with NUREG-1801 AMP.
D	Component is different, but consistent with NUREG-1801 item for material, environment, and aging effect. AMP takes some exceptions to NUREG-1801 AMP.
E	Consistent with NUREG-1801 item for material, environment and aging effect, but a different aging management program is credited or NUREG-1801 identifies a plant-specific aging management program.
F	Material not in NUREG-1801 for this component.
G	Environment not in NUREG-1801 for this component and material.
H	Aging effect not in NUREG-1801 for this component, material and environment combination.
I	Aging effect in NUREG-1801 for this component, material and environment combination is not applicable.
J	Neither the component nor the material and environment combination is evaluated in NUREG-1801.

Plant Specific Notes:

1. The Inspection of Overhead Heavy Load and Light Load (Related to Refueling) Handling Systems Program is substituted to manage the aging effect(s) applicable to this component type, material, and environment combination.

2. The aging mechanism(s) of Thermal Effects and Gasket Creep for this component, material and environment combination are not applicable.

3. NUREG-1801 specifies a plant-specific program. The Boral Monitoring Program is used to manage the aging effect(s) applicable to this component type, material, and environment combination.

4. NUREG-1801 specifies a plant-specific program. The Water Chemistry Program is used to manage the aging effect(s) applicable to this component type, material, and environment combination.

Table 3.3.2-14
Fuel Pool Cooling and Cleanup System
Summary of Aging Management Evaluation

Table 3.3.2-14 Fuel Pool Cooling and Cleanup System

Component Type	Intended Function	Material	Environment	Aging Effect Requiring Management	Aging Management Programs	NUREG-1801 Vol. 2 Item	Table 1 Item	Notes
Bolting	Mechanical Closure	Carbon and Low Alloy Steel Bolting	Air - Indoor (External)	Loss of Material/General, Pitting and Crevice Corrosion	Bolting Integrity	VII.I-4	3.3.1-43	B
Bolting	Mechanical Closure	Carbon and Low Alloy Steel Bolting	Air - Indoor (External)	Loss of Preload/Thermal Effects, Gasket Creep, and Self-Loosening	Bolting Integrity	VII.I-5	3.3.1-45	B
Bolting	Mechanical Closure	Stainless Steel Bolting	Air - Indoor (External)	Loss of Preload/Thermal Effects, Gasket Creep, and Self-Loosening	Bolting Integrity	IV.C2-8	3.1.1-52	B
Diffuser	Direct Flow	Stainless Steel	Treated Water (External)	Loss of Material/Pitting and Crevice Corrosion	One-Time Inspection	VII.A4-11	3.3.1-24	A
Diffuser	Direct Flow	Stainless Steel	Treated Water (External)	Loss of Material/Pitting and Crevice Corrosion	Water Chemistry	VII.A4-11	3.3.1-24	B
Diffuser	Direct Flow	Stainless Steel	Treated Water (Internal)	Loss of Material/Pitting and Crevice Corrosion	One-Time Inspection	VII.A4-11	3.3.1-24	A
Diffuser	Direct Flow	Stainless Steel	Treated Water (Internal)	Loss of Material/Pitting and Crevice Corrosion	Water Chemistry	VII.A4-11	3.3.1-24	B
Flow Element	Leakage Boundary	Stainless Steel	Air - Indoor (External)	None	None	VII.J-15	3.3.1-94	A
Flow Element	Leakage Boundary	Stainless Steel	Treated Water (Internal)	Loss of Material/Pitting and Crevice Corrosion	One-Time Inspection	VII.A4-11	3.3.1-24	A
Flow Element	Leakage Boundary	Stainless Steel	Treated Water (Internal)	Loss of Material/Pitting and Crevice Corrosion	Water Chemistry	VII.A4-11	3.3.1-24	B
Flow Element	Pressure Boundary	Stainless Steel	Air - Indoor (External)	None	None	VII.J-15	3.3.1-94	A
Flow Element	Pressure Boundary	Stainless Steel	Treated Water (Internal)	Loss of Material/Pitting and Crevice Corrosion	One-Time Inspection	VII.A4-11	3.3.1-24	A
Flow Element	Pressure Boundary	Stainless Steel	Treated Water (Internal)	Loss of Material/Pitting and Crevice Corrosion	Water Chemistry	VII.A4-11	3.3.1-24	B

Table 3.3.2-14 Fuel Pool Cooling and Cleanup System (Continued)

Component Type	Intended Function	Material	Environment	Aging Effect Requiring Management	Aging Management Programs	NUREG-1801 Vol. 2 Item	Table 1 Item	Notes
Heat Exchanger Components (Fuel Pool Cooling and Cleanup)	Evaluated with the Closed Cycle Cooling Water System	Not Applicable	Not Applicable	Not Applicable	Not Applicable			
Piping and Fittings	Leakage Boundary	Carbon Steel	Air - Indoor (External)	Loss of Material/General Corrosion	External Surfaces Monitoring	VII.D-3	3.3.1-57	A
Piping and Fittings	Leakage Boundary	Carbon Steel	Treated Water (Internal)	Loss of Material/Galvanic Corrosion	One-Time Inspection	VIII.E-7	3.4.1-5	C
Piping and Fittings	Leakage Boundary	Carbon Steel	Treated Water (Internal)	Loss of Material/Galvanic Corrosion	Water Chemistry	VIII.E-7	3.4.1-5	D
Piping and Fittings	Leakage Boundary	Carbon Steel	Treated Water (Internal)	Loss of Material/General, Pitting and Crevice Corrosion	One-Time Inspection	VII.E3-18	3.3.1-17	A
Piping and Fittings	Leakage Boundary	Carbon Steel	Treated Water (Internal)	Loss of Material/General, Pitting and Crevice Corrosion	Water Chemistry	VII.E3-18	3.3.1-17	B
Piping and Fittings	Leakage Boundary	Stainless Steel	Air - Indoor (External)	None	None	VII.J-15	3.3.1-94	A
Piping and Fittings	Leakage Boundary	Stainless Steel	Treated Water (Internal)	Loss of Material/Pitting and Crevice Corrosion	One-Time Inspection	VII.A4-11	3.3.1-24	A
Piping and Fittings	Leakage Boundary	Stainless Steel	Treated Water (Internal)	Loss of Material/Pitting and Crevice Corrosion	Water Chemistry	VII.A4-11	3.3.1-24	B
Piping and Fittings	Pressure Boundary	Carbon Steel	Air - Indoor (External)	Loss of Material/General Corrosion	External Surfaces Monitoring	VII.D-3	3.3.1-57	A
Piping and Fittings	Pressure Boundary	Carbon Steel	Air/Gas - Wetted (Internal)	Loss of Material/General, Pitting and Crevice Corrosion	Inspection of Internal Surfaces in Miscellaneous Piping and Ducting Components	VII.H2-21	3.3.1-71	A
Piping and Fittings	Pressure Boundary	Carbon Steel	Concrete (Embedded)	None	None	VII.J-21	3.3.1-96	A
Piping and Fittings	Pressure Boundary	Carbon Steel	Treated Water (Internal)	Loss of Material/Galvanic Corrosion	One-Time Inspection	VIII.E-7	3.4.1-5	C
Piping and Fittings	Pressure Boundary	Carbon Steel	Treated Water (Internal)	Loss of Material/Galvanic Corrosion	Water Chemistry	VIII.E-7	3.4.1-5	D

Table 3.3.2-14 Fuel Pool Cooling and Cleanup System (Continued)

Component Type	Intended Function	Material	Environment	Aging Effect Requiring Management	Aging Management Programs	NUREG-1801 Vol. 2 Item	Table 1 Item	Notes
Piping and Fittings	Pressure Boundary	Carbon Steel	Treated Water (Internal)	Loss of Material/General, Pitting and Crevice Corrosion	One-Time Inspection	VII.E3-18	3.3.1-17	A
Piping and Fittings	Pressure Boundary	Carbon Steel	Treated Water (Internal)	Loss of Material/General, Pitting and Crevice Corrosion	Water Chemistry	VII.E3-18	3.3.1-17	B
Piping and Fittings	Pressure Boundary	Stainless Steel	Air - Indoor (External)	None	None	VII.J-15	3.3.1-94	A
Piping and Fittings	Pressure Boundary	Stainless Steel	Concrete (Embedded)	None	None	VII.J-17	3.3.1-96	A
Piping and Fittings	Pressure Boundary	Stainless Steel	Treated Water (Internal)	Loss of Material/Pitting and Crevice Corrosion	One-Time Inspection	VII.A4-11	3.3.1-24	A
Piping and Fittings	Pressure Boundary	Stainless Steel	Treated Water (Internal)	Loss of Material/Pitting and Crevice Corrosion	Water Chemistry	VII.A4-11	3.3.1-24	B
Pump Casing (Fuel Pool Cooling Pump)	Pressure Boundary	Carbon Steel	Air - Indoor (External)	Loss of Material/General Corrosion	External Surfaces Monitoring	VII.D-3	3.3.1-57	A
Pump Casing (Fuel Pool Cooling Pump)	Pressure Boundary	Carbon Steel	Treated Water (Internal)	Loss of Material/General, Pitting and Crevice Corrosion	One-Time Inspection	VII.E3-18	3.3.1-17	A
Pump Casing (Fuel Pool Cooling Pump)	Pressure Boundary	Carbon Steel	Treated Water (Internal)	Loss of Material/General, Pitting and Crevice Corrosion	Water Chemistry	VII.E3-18	3.3.1-17	B
Restricting Orifices	Pressure Boundary	Stainless Steel	Air - Indoor (External)	None	None	VII.J-15	3.3.1-94	A
Restricting Orifices	Pressure Boundary	Stainless Steel	Treated Water (Internal)	Loss of Material/Pitting and Crevice Corrosion	One-Time Inspection	VII.A4-11	3.3.1-24	A
Restricting Orifices	Pressure Boundary	Stainless Steel	Treated Water (Internal)	Loss of Material/Pitting and Crevice Corrosion	Water Chemistry	VII.A4-11	3.3.1-24	B
Restricting Orifices	Throttle	Stainless Steel	Air - Indoor (External)	None	None	VII.J-15	3.3.1-94	A
Restricting Orifices	Throttle	Stainless Steel	Treated Water (Internal)	Loss of Material/Pitting and Crevice Corrosion	One-Time Inspection	VII.A4-11	3.3.1-24	A
Restricting Orifices	Throttle	Stainless Steel	Treated Water (Internal)	Loss of Material/Pitting and Crevice Corrosion	Water Chemistry	VII.A4-11	3.3.1-24	B
Spray Nozzles (Fuel Storage Pool)	Spray	Stainless Steel	Treated Water (External)	Loss of Material/Pitting and Crevice Corrosion	One-Time Inspection	VII.A4-11	3.3.1-24	A

Table 3.3.2-14 Fuel Pool Cooling and Cleanup System (Continued)

Component Type	Intended Function	Material	Environment	Aging Effect Requiring Management	Aging Management Programs	NUREG-1801 Vol. 2 Item	Table 1 Item	Notes
Spray Nozzles (Fuel Storage Pool)	Spray	Stainless Steel	Treated Water (External)	Loss of Material/Pitting and Crevice Corrosion	Water Chemistry	VII.A4-11	3.3.1-24	B
Spray Nozzles (Fuel Storage Pool)	Spray	Stainless Steel	Treated Water (Internal)	Loss of Material/Pitting and Crevice Corrosion	One-Time Inspection	VII.A4-11	3.3.1-24	A
Spray Nozzles (Fuel Storage Pool)	Spray	Stainless Steel	Treated Water (Internal)	Loss of Material/Pitting and Crevice Corrosion	Water Chemistry	VII.A4-11	3.3.1-24	B
Thermowell	Pressure Boundary	Stainless Steel	Air - Indoor (External)	None	None	VII.J-15	3.3.1-94	A
Thermowell	Pressure Boundary	Stainless Steel	Treated Water (Internal)	Loss of Material/Pitting and Crevice Corrosion	One-Time Inspection	VII.A4-11	3.3.1-24	A
Thermowell	Pressure Boundary	Stainless Steel	Treated Water (Internal)	Loss of Material/Pitting and Crevice Corrosion	Water Chemistry	VII.A4-11	3.3.1-24	B
Valve Body	Leakage Boundary	Carbon Steel	Air - Indoor (External)	Loss of Material/General Corrosion	External Surfaces Monitoring	VII.D-3	3.3.1-57	A
Valve Body	Leakage Boundary	Carbon Steel	Treated Water (Internal)	Loss of Material/General, Pitting and Crevice Corrosion	One-Time Inspection	VII.E3-18	3.3.1-17	A
Valve Body	Leakage Boundary	Carbon Steel	Treated Water (Internal)	Loss of Material/General, Pitting and Crevice Corrosion	Water Chemistry	VII.E3-18	3.3.1-17	B
Valve Body	Leakage Boundary	Stainless Steel	Air - Indoor (External)	None	None	VII.J-15	3.3.1-94	A
Valve Body	Leakage Boundary	Stainless Steel	Treated Water (Internal)	Loss of Material/Pitting and Crevice Corrosion	One-Time Inspection	VII.A4-11	3.3.1-24	A
Valve Body	Leakage Boundary	Stainless Steel	Treated Water (Internal)	Loss of Material/Pitting and Crevice Corrosion	Water Chemistry	VII.A4-11	3.3.1-24	B
Valve Body	Pressure Boundary	Carbon Steel	Air - Indoor (External)	Loss of Material/General Corrosion	External Surfaces Monitoring	VII.D-3	3.3.1-57	A
Valve Body	Pressure Boundary	Carbon Steel	Air/Gas - Wetted (Internal)	Loss of Material/General, Pitting and Crevice Corrosion	Inspection of Internal Surfaces in Miscellaneous Piping and Ducting Components	VII.H2-21	3.3.1-71	A
Valve Body	Pressure Boundary	Stainless Steel	Air - Indoor (External)	None	None	VII.J-15	3.3.1-94	A
Valve Body	Pressure Boundary	Stainless Steel	Treated Water (Internal)	Loss of Material/Pitting and Crevice Corrosion	One-Time Inspection	VII.A4-11	3.3.1-24	A

Table 3.3.2-14 Fuel Pool Cooling and Cleanup System (Continued)

Component Type	Intended Function	Material	Environment	Aging Effect Requiring Management	Aging Management Programs	NUREG-1801 Vol. 2 Item	Table 1 Item	Notes
Valve Body	Pressure Boundary	Stainless Steel	Treated Water (Internal)	Loss of Material/Pitting and Crevice Corrosion	Water Chemistry	VII.A4-11	3.3.1-24	B
Weir	Direct Flow	Stainless Steel	Air - Indoor (External)	None	None	VII.J-15	3.3.1-94	C
Weir	Direct Flow	Stainless Steel	Concrete (Embedded)	None	None	VII.J-17	3.3.1-96	C
Weir	Direct Flow	Stainless Steel	Treated Water (Internal)	Loss of Material/Pitting and Crevice Corrosion	One-Time Inspection	VII.A4-11	3.3.1-24	A
Weir	Direct Flow	Stainless Steel	Treated Water (Internal)	Loss of Material/Pitting and Crevice Corrosion	Water Chemistry	VII.A4-11	3.3.1-24	B

Notes	Definition of Note
A	Consistent with NUREG-1801 item for component, material, environment, and aging effect. AMP is consistent with NUREG-1801 AMP.
B	Consistent with NUREG-1801 item for component, material, environment, and aging effect. AMP takes some exceptions to NUREG-1801 AMP.
C	Component is different, but consistent with NUREG-1801 item for material, environment, and aging effect. AMP is consistent with NUREG-1801 AMP.
D	Component is different, but consistent with NUREG-1801 item for material, environment, and aging effect. AMP takes some exceptions to NUREG-1801 AMP.
E	Consistent with NUREG-1801 item for material, environment and aging effect, but a different aging management program is credited or NUREG-1801 identifies a plant-specific aging management program.
F	Material not in NUREG-1801 for this component.
G	Environment not in NUREG-1801 for this component and material.
H	Aging effect not in NUREG-1801 for this component, material and environment combination.
I	Aging effect in NUREG-1801 for this component, material and environment combination is not applicable.
J	Neither the component nor the material and environment combination is evaluated in NUREG-1801.

Plant Specific Notes:

None.

Table 3.3.2-15
Hardened Torus Vent System
Summary of Aging Management Evaluation

Table 3.3.2-15 Hardened Torus Vent System

Component Type	Intended Function	Material	Environment	Aging Effect Requiring Management	Aging Management Programs	NUREG-1801 Vol. 2 Item	Table 1 Item	Notes
Bolting	Mechanical Closure	Carbon and Low Alloy Steel Bolting	Air - Indoor (External)	Loss of Material/General, Pitting and Crevice Corrosion	Bolting Integrity	VII.I-4	3.3.1-43	B
Bolting	Mechanical Closure	Carbon and Low Alloy Steel Bolting	Air - Indoor (External)	Loss of Preload/Thermal Effects, Gasket Creep, and Self-Loosening	Bolting Integrity	VII.I-5	3.3.1-45	B
Piping and Fittings	Pressure Boundary	Carbon Steel	Air - Indoor (External)	Loss of Material/General Corrosion	External Surfaces Monitoring	VII.D-3	3.3.1-57	A
Piping and Fittings	Pressure Boundary	Carbon Steel	Air/Gas - Wetted (Internal)	Loss of Material/General, Pitting and Crevice Corrosion	Inspection of Internal Surfaces in Miscellaneous Piping and Ducting Components	VII.G-23	3.3.1-71	A
Piping and Fittings	Structural Support	Stainless Steel	Air - Indoor (External)	None	None	VII.J-15	3.3.1-94	A
Piping and Fittings	Structural Support	Stainless Steel	Air/Gas - Wetted (Internal)	Loss of Material/Pitting and Crevice Corrosion	Periodic Inspection	VII.D-4	3.3.1-54	E, 1
Valve Body	Pressure Boundary	Carbon Steel	Air - Indoor (External)	Loss of Material/General Corrosion	External Surfaces Monitoring	VII.D-3	3.3.1-57	A
Valve Body	Pressure Boundary	Carbon Steel	Air/Gas - Wetted (Internal)	Loss of Material/General, Pitting and Crevice Corrosion	Inspection of Internal Surfaces in Miscellaneous Piping and Ducting Components	VII.G-23	3.3.1-71	A

Notes	Definition of Note
A	Consistent with NUREG-1801 item for component, material, environment, and aging effect. AMP is consistent with NUREG-1801 AMP.
B	Consistent with NUREG-1801 item for component, material, environment, and aging effect. AMP takes some exceptions to NUREG-1801 AMP.
C	Component is different, but consistent with NUREG-1801 item for material, environment, and aging effect. AMP is consistent with NUREG-1801 AMP.
D	Component is different, but consistent with NUREG-1801 item for material, environment, and aging effect. AMP takes some exceptions to NUREG-1801 AMP.
E	Consistent with NUREG-1801 item for material, environment and aging effect, but a different aging management program is credited or NUREG-1801 identifies a plant-specific aging management program.
F	Material not in NUREG-1801 for this component.
G	Environment not in NUREG-1801 for this component and material.
H	Aging effect not in NUREG-1801 for this component, material and environment combination.
I	Aging effect in NUREG-1801 for this component, material and environment combination is not applicable.
J	Neither the component nor the material and environment combination is evaluated in NUREG-1801.

Plant Specific Notes:

1. The Periodic Inspection program is substituted to manage the aging effect(s) applicable to this component type, material, and environment combination.

Table 3.3.2-16
Hydrogen Water Chemistry System
Summary of Aging Management Evaluation

Table 3.3.2-16 Hydrogen Water Chemistry System

Component Type	Intended Function	Material	Environment	Aging Effect Requiring Management	Aging Management Programs	NUREG-1801 Vol. 2 Item	Table 1 Item	Notes
Bolting	Mechanical Closure	Carbon and Low Alloy Steel Bolting	Air - Indoor (External)	Loss of Material/General, Pitting and Crevice Corrosion	Bolting Integrity	VII.I-4	3.3.1-43	B
Bolting	Mechanical Closure	Carbon and Low Alloy Steel Bolting	Air - Indoor (External)	Loss of Preload/Thermal Effects, Gasket Creep, and Self-Loosening	Bolting Integrity	VII.I-5	3.3.1-45	B
Flow Element	Leakage Boundary	Stainless Steel	Air - Indoor (External)	None	None	VII.J-15	3.3.1-94	A
Flow Element	Leakage Boundary	Stainless Steel	Treated Water (Internal)	Loss of Material/Pitting and Crevice Corrosion	One-Time Inspection	VII.E3-15	3.3.1-24	A
Flow Element	Leakage Boundary	Stainless Steel	Treated Water (Internal)	Loss of Material/Pitting and Crevice Corrosion	Water Chemistry	VII.E3-15	3.3.1-24	B
Heat Exchanger Components (Sample Cooler 433)	Leakage Boundary	Stainless Steel (Shell)	Air - Indoor (External)	None	None	VII.J-15	3.3.1-94	C
Heat Exchanger Components (Sample Cooler 433)	Leakage Boundary	Stainless Steel (Shell)	Treated Water (Internal)	Loss of Material/Pitting and Crevice Corrosion	One-Time Inspection	VII.A4-2	3.3.1-23	A
Heat Exchanger Components (Sample Cooler 433)	Leakage Boundary	Stainless Steel (Shell)	Treated Water (Internal)	Loss of Material/Pitting and Crevice Corrosion	Water Chemistry	VII.A4-2	3.3.1-23	B
Heat Exchanger Components (Sample Cooler 433)	Leakage Boundary	Stainless Steel (Tubes)	Treated Water (External)	Loss of Material/Pitting and Crevice Corrosion	One-Time Inspection	VII.A4-2	3.3.1-23	A

Table 3.3.2-16 Hydrogen Water Chemistry System (Continued)

Component Type	Intended Function	Material	Environment	Aging Effect Requiring Management	Aging Management Programs	NUREG-1801 Vol. 2 Item	Table 1 Item	Notes
Heat Exchanger Components (Sample Cooler 433)	Leakage Boundary	Stainless Steel (Tubes)	Treated Water (External)	Loss of Material/Pitting and Crevice Corrosion	Water Chemistry	VII.A4-2	3.3.1-23	B
Heat Exchanger Components (Sample Cooler 433)	Leakage Boundary	Stainless Steel (Tubes)	Treated Water (Internal)	Loss of Material/Pitting and Crevice Corrosion	One-Time Inspection	VII.A4-2	3.3.1-23	A
Heat Exchanger Components (Sample Cooler 433)	Leakage Boundary	Stainless Steel (Tubes)	Treated Water (Internal)	Loss of Material/Pitting and Crevice Corrosion	Water Chemistry	VII.A4-2	3.3.1-23	B
Piping and Fittings	Leakage Boundary	Stainless Steel	Air - Indoor (External)	None	None	VII.J-15	3.3.1-94	A
Piping and Fittings	Leakage Boundary	Stainless Steel	Treated Water (Internal)	Loss of Material/Pitting and Crevice Corrosion	One-Time Inspection	VII.E3-15	3.3.1-24	A
Piping and Fittings	Leakage Boundary	Stainless Steel	Treated Water (Internal)	Loss of Material/Pitting and Crevice Corrosion	Water Chemistry	VII.E3-15	3.3.1-24	B
Tanks (CAV)	Leakage Boundary	Stainless Steel	Air - Indoor (External)	None	None	VII.J-15	3.3.1-94	C
Tanks (CAV)	Leakage Boundary	Stainless Steel	Treated Water (Internal)	Loss of Material/Pitting and Crevice Corrosion	One-Time Inspection	VII.E3-15	3.3.1-24	C
Tanks (CAV)	Leakage Boundary	Stainless Steel	Treated Water (Internal)	Loss of Material/Pitting and Crevice Corrosion	Water Chemistry	VII.E3-15	3.3.1-24	D
Tanks (ECP)	Leakage Boundary	Stainless Steel	Air - Indoor (External)	None	None	VII.J-15	3.3.1-94	C
Tanks (ECP)	Leakage Boundary	Stainless Steel	Treated Water (Internal)	Loss of Material/Pitting and Crevice Corrosion	One-Time Inspection	VII.E3-15	3.3.1-24	C
Tanks (ECP)	Leakage Boundary	Stainless Steel	Treated Water (Internal)	Loss of Material/Pitting and Crevice Corrosion	Water Chemistry	VII.E3-15	3.3.1-24	D
Valve Body	Leakage Boundary	Stainless Steel	Air - Indoor (External)	None	None	VII.J-15	3.3.1-94	A
Valve Body	Leakage Boundary	Stainless Steel	Treated Water (Internal)	Loss of Material/Pitting and Crevice Corrosion	One-Time Inspection	VII.E3-15	3.3.1-24	A
Valve Body	Leakage Boundary	Stainless Steel	Treated Water (Internal)	Loss of Material/Pitting and Crevice Corrosion	Water Chemistry	VII.E3-15	3.3.1-24	B

Notes	Definition of Note
A	Consistent with NUREG-1801 item for component, material, environment, and aging effect. AMP is consistent with NUREG-1801 AMP.
B	Consistent with NUREG-1801 item for component, material, environment, and aging effect. AMP takes some exceptions to NUREG-1801 AMP.
C	Component is different, but consistent with NUREG-1801 item for material, environment, and aging effect. AMP is consistent with NUREG-1801 AMP.
D	Component is different, but consistent with NUREG-1801 item for material, environment, and aging effect. AMP takes some exceptions to NUREG-1801 AMP.
E	Consistent with NUREG-1801 item for material, environment and aging effect, but a different aging management program is credited or NUREG-1801 identifies a plant-specific aging management program.
F	Material not in NUREG-1801 for this component.
G	Environment not in NUREG-1801 for this component and material.
H	Aging effect not in NUREG-1801 for this component, material and environment combination.
I	Aging effect in NUREG-1801 for this component, material and environment combination is not applicable.
J	Neither the component nor the material and environment combination is evaluated in NUREG-1801.

Plant Specific Notes:

None.

Table 3.3.2-17
Leak Detection and Radiation Monitoring System
Summary of Aging Management Evaluation

Table 3.3.2-17 Leak Detection and Radiation Monitoring System

Component Type	Intended Function	Material	Environment	Aging Effect Requiring Management	Aging Management Programs	NUREG-1801 Vol. 2 Item	Table 1 Item	Notes
Bolting	Mechanical Closure	Carbon and Low Alloy Steel Bolting	Air - Indoor (External)	Loss of Material/General, Pitting and Crevice Corrosion	Bolting Integrity	VII.I-4	3.3.1-43	B
Bolting	Mechanical Closure	Carbon and Low Alloy Steel Bolting	Air - Indoor (External)	Loss of Preload/Thermal Effects, Gasket Creep, and Self-Loosening	Bolting Integrity	VII.I-5	3.3.1-45	B
Flow Element	Leakage Boundary	Stainless Steel	Air - Indoor (External)	None	None	VII.J-15	3.3.1-94	A
Flow Element	Leakage Boundary	Stainless Steel	Air/Gas - Wetted (Internal)	Loss of Material/Pitting and Crevice Corrosion	Periodic Inspection	VII.D-4	3.3.1-54	E, 1
Piping and Fittings	Leakage Boundary	Carbon Steel	Air - Indoor (External)	Loss of Material/General Corrosion	External Surfaces Monitoring	VII.D-3	3.3.1-57	A
Piping and Fittings	Leakage Boundary	Carbon Steel	Air/Gas - Wetted (Internal)	Loss of Material/General, Pitting and Crevice Corrosion	Inspection of Internal Surfaces in Miscellaneous Piping and Ducting Components	VII.H2-21	3.3.1-71	A
Piping and Fittings	Leakage Boundary	Stainless Steel	Air - Indoor (External)	None	None	VII.J-15	3.3.1-94	A
Piping and Fittings	Leakage Boundary	Stainless Steel	Air/Gas - Wetted (Internal)	Loss of Material/Pitting and Crevice Corrosion	Periodic Inspection	VII.D-4	3.3.1-54	E, 1
Piping and Fittings	Pressure Boundary	Stainless Steel	Air - Indoor (External)	None	None	VII.J-15	3.3.1-94	A
Piping and Fittings	Pressure Boundary	Stainless Steel	Air/Gas - Wetted (Internal)	Loss of Material/Pitting and Crevice Corrosion	Periodic Inspection	VII.D-4	3.3.1-54	E, 1
Piping and Fittings	Structural Support	Stainless Steel	Air - Indoor (External)	None	None	VII.J-15	3.3.1-94	A
Piping and Fittings	Structural Support	Stainless Steel	Air/Gas - Wetted (Internal)	Loss of Material/Pitting and Crevice Corrosion	Periodic Inspection	VII.D-4	3.3.1-54	E, 1
Valve Body	Leakage Boundary	Carbon Steel	Air - Indoor (External)	Loss of Material/General Corrosion	External Surfaces Monitoring	VII.D-3	3.3.1-57	A

Table 3.3.2-17 Leak Detection and Radiation Monitoring System (Continued)

Component Type	Intended Function	Material	Environment	Aging Effect Requiring Management	Aging Management Programs	NUREG-1801 Vol. 2 Item	Table 1 Item	Notes
Valve Body	Leakage Boundary	Carbon Steel	Air/Gas - Wetted (Internal)	Loss of Material/General, Pitting and Crevice Corrosion	Inspection of Internal Surfaces in Miscellaneous Piping and Ducting Components	VII.H2-21	3.3.1-71	A
Valve Body	Pressure Boundary	Stainless Steel	Air - Indoor (External)	None	None	VII.J-15	3.3.1-94	A
Valve Body	Pressure Boundary	Stainless Steel	Air/Gas - Wetted (Internal)	Loss of Material/Pitting and Crevice Corrosion	Periodic Inspection	VII.D-4	3.3.1-54	E, 1

Notes	Definition of Note
A	Consistent with NUREG-1801 item for component, material, environment, and aging effect. AMP is consistent with NUREG-1801 AMP.
B	Consistent with NUREG-1801 item for component, material, environment, and aging effect. AMP takes some exceptions to NUREG-1801 AMP.
C	Component is different, but consistent with NUREG-1801 item for material, environment, and aging effect. AMP is consistent with NUREG-1801 AMP.
D	Component is different, but consistent with NUREG-1801 item for material, environment, and aging effect. AMP takes some exceptions to NUREG-1801 AMP.
E	Consistent with NUREG-1801 item for material, environment and aging effect, but a different aging management program is credited or NUREG-1801 identifies a plant-specific aging management program.
F	Material not in NUREG-1801 for this component.
G	Environment not in NUREG-1801 for this component and material.
H	Aging effect not in NUREG-1801 for this component, material and environment combination.
I	Aging effect in NUREG-1801 for this component, material and environment combination is not applicable.
J	Neither the component nor the material and environment combination is evaluated in NUREG-1801.

Plant Specific Notes:

1. The Periodic Inspection program is substituted to manage the aging effect(s) applicable to this component type, material, and environment combination.

Table 3.3.2-18
Makeup Demineralizer System
Summary of Aging Management Evaluation

Table 3.3.2-18 Makeup Demineralizer System

Component Type	Intended Function	Material	Environment	Aging Effect Requiring Management	Aging Management Programs	NUREG-1801 Vol. 2 Item	Table 1 Item	Notes
Bolting	Mechanical Closure	Carbon and Low Alloy Steel Bolting	Air - Indoor (External)	Loss of Material/General, Pitting and Crevice Corrosion	Bolting Integrity	VII.I-4	3.3.1-43	B
Bolting	Mechanical Closure	Carbon and Low Alloy Steel Bolting	Air - Indoor (External)	Loss of Preload/Thermal Effects, Gasket Creep, and Self-Loosening	Bolting Integrity	VII.I-5	3.3.1-45	B
Piping and Fittings	Leakage Boundary	Stainless Steel	Air - Indoor (External)	None	None	VII.J-15	3.3.1-94	A
Piping and Fittings	Leakage Boundary	Stainless Steel	Air/Gas Wetted (External)	Loss of Material/Pitting and Crevice Corrosion	Periodic Inspection	VII.F1-1	3.3.1-27	E, 1
Piping and Fittings	Leakage Boundary	Stainless Steel	Treated Water (Internal)	Loss of Material/Pitting and Crevice Corrosion	One-Time Inspection	VII.A4-11	3.3.1-24	A
Piping and Fittings	Leakage Boundary	Stainless Steel	Treated Water (Internal)	Loss of Material/Pitting and Crevice Corrosion	Water Chemistry	VII.A4-11	3.3.1-24	B
Valve Body	Leakage Boundary	Stainless Steel	Air - Indoor (External)	None	None	VII.J-15	3.3.1-94	A
Valve Body	Leakage Boundary	Stainless Steel	Air/Gas Wetted (External)	Loss of Material/Pitting and Crevice Corrosion	Periodic Inspection	VII.F1-1	3.3.1-27	E, 1
Valve Body	Leakage Boundary	Stainless Steel	Treated Water (Internal)	Loss of Material/Pitting and Crevice Corrosion	One-Time Inspection	VII.A4-11	3.3.1-24	A
Valve Body	Leakage Boundary	Stainless Steel	Treated Water (Internal)	Loss of Material/Pitting and Crevice Corrosion	Water Chemistry	VII.A4-11	3.3.1-24	B

Notes	Definition of Note
A	Consistent with NUREG-1801 item for component, material, environment, and aging effect. AMP is consistent with NUREG-1801 AMP.
B	Consistent with NUREG-1801 item for component, material, environment, and aging effect. AMP takes some exceptions to NUREG-1801 AMP.
C	Component is different, but consistent with NUREG-1801 item for material, environment, and aging effect. AMP is consistent with NUREG-1801 AMP.
D	Component is different, but consistent with NUREG-1801 item for material, environment, and aging effect. AMP takes some exceptions to NUREG-1801 AMP.
E	Consistent with NUREG-1801 item for material, environment and aging effect, but a different aging management program is credited or NUREG-1801 identifies a plant-specific aging management program.
F	Material not in NUREG-1801 for this component.
G	Environment not in NUREG-1801 for this component and material.
H	Aging effect not in NUREG-1801 for this component, material and environment combination.
I	Aging effect in NUREG-1801 for this component, material and environment combination is not applicable.
J	Neither the component nor the material and environment combination is evaluated in NUREG-1801.

Plant Specific Notes:

1. NUREG-1801 specifies a plant-specific program. The Periodic Inspection program is used to manage the aging effects applicable to this components, material and environment combination. The component is located within HVAC ducting, and the external surfaces are subject to the HVAC environment of Air/Gas - Wetted during normal operation.

Table 3.3.2-19
Primary Containment Instrument Gas System
Summary of Aging Management Evaluation

Table 3.3.2-19 Primary Containment Instrument Gas System

Component Type	Intended Function	Material	Environment	Aging Effect Requiring Management	Aging Management Programs	NUREG-1801 Vol. 2 Item	Table 1 Item	Notes
Accumulator	Pressure Boundary	Stainless Steel	Air - Indoor (External)	None	None	VII.J-15	3.3.1-94	A
Accumulator	Pressure Boundary	Stainless Steel	Air/Gas - Dry (Internal)	None	Compressed Air Monitoring	VII.J-18	3.3.1-98	E, 1
Bolting	Mechanical Closure	Carbon and Low Alloy Steel Bolting	Air - Indoor (External)	Loss of Material/General, Pitting and Crevice Corrosion	Bolting Integrity	VII.I-4	3.3.1-43	B
Bolting	Mechanical Closure	Carbon and Low Alloy Steel Bolting	Air - Indoor (External)	Loss of Preload/Thermal Effects, Gasket Creep, and Self-Loosening	Bolting Integrity	VII.I-5	3.3.1-45	B
Compressor	Structural Support	Ductile Cast Iron	Air - Indoor (External)	Loss of Material/General Corrosion	External Surfaces Monitoring	VII.D-3	3.3.1-57	A
Compressor	Structural Support	Ductile Cast Iron	Air/Gas - Wetted (Internal)	Loss of Material/General, Pitting and Crevice Corrosion	Inspection of Internal Surfaces in Miscellaneous Piping and Ducting Components	VII.F3-3	3.3.1-72	A
Drain Traps	Structural Support	Carbon Steel	Air - Indoor (External)	Loss of Material/General Corrosion	External Surfaces Monitoring	VII.D-3	3.3.1-57	A
Drain Traps	Structural Support	Carbon Steel	Air/Gas - Wetted (Internal)	Loss of Material/General, Pitting and Crevice Corrosion	Compressed Air Monitoring	VII.D-2	3.3.1-53	A
Filter Housing (Inlet, Outlet, Prefilter, Intake Screen)	Pressure Boundary	Stainless Steel	Air - Indoor (External)	None	None	VII.J-15	3.3.1-94	A
Filter Housing (Inlet, Outlet, Prefilter, Intake Screen)	Pressure Boundary	Stainless Steel	Air/Gas - Wetted (Internal)	Loss of Material/Pitting and Crevice Corrosion	Compressed Air Monitoring	VII.D-4	3.3.1-54	A

Table 3.3.2-19 Primary Containment Instrument Gas System (Continued)

Component Type	Intended Function	Material	Environment	Aging Effect Requiring Management	Aging Management Programs	NUREG-1801 Vol. 2 Item	Table 1 Item	Notes
Filter Housing (Inlet, Outlet, Prefilter, Intake Screen)	Structural Support	Stainless Steel	Air - Indoor (External)	None	None	VII.J-15	3.3.1-94	A
Filter Housing (Inlet, Outlet, Prefilter, Intake Screen)	Structural Support	Stainless Steel	Air/Gas - Wetted (Internal)	Loss of Material/Pitting and Crevice Corrosion	Compressed Air Monitoring	VII.D-4	3.3.1-54	A
Flow Element	Pressure Boundary	Stainless Steel	Air - Indoor (External)	None	None	VII.J-15	3.3.1-94	A
Flow Element	Pressure Boundary	Stainless Steel	Air/Gas - Wetted (Internal)	Loss of Material/Pitting and Crevice Corrosion	Compressed Air Monitoring	VII.D-4	3.3.1-54	A
Heat Exchanger Components (PCIG Compressor Inter & After coolers)	Evaluated with the Closed Cycle Cooling Water System	Not Applicable	Not Applicable	Not Applicable	Not Applicable			
Heat Exchanger Components (Thermo-Siphon)	Evaluated with the Closed Cycle Cooling Water System	Not Applicable	Not Applicable	Not Applicable	Not Applicable			
Hoses	Pressure Boundary	Stainless Steel	Air - Indoor (External)	None	None	VII.J-15	3.3.1-94	A
Hoses	Pressure Boundary	Stainless Steel	Air/Gas - Dry (Internal)	None	Compressed Air Monitoring	VII.J-18	3.3.1-98	E, 1
Piping and Fittings	Pressure Boundary	Carbon Steel	Air - Indoor (External)	Loss of Material/General Corrosion	External Surfaces Monitoring	VII.D-3	3.3.1-57	A
Piping and Fittings	Pressure Boundary	Carbon Steel	Air/Gas - Dry (Internal)	None	Compressed Air Monitoring	VII.J-22	3.3.1-98	E, 1
Piping and Fittings	Pressure Boundary	Carbon Steel	Air/Gas - Wetted (Internal)	Loss of Material/General, Pitting and Crevice Corrosion	Compressed Air Monitoring	VII.D-2	3.3.1-53	A
Piping and Fittings	Pressure Boundary	Stainless Steel	Air - Indoor (External)	None	None	VII.J-15	3.3.1-94	A
Piping and Fittings	Pressure Boundary	Stainless Steel	Air/Gas - Dry (Internal)	None	Compressed Air Monitoring	VII.J-18	3.3.1-98	E, 1
Piping and Fittings	Pressure Boundary	Stainless Steel	Air/Gas - Wetted (Internal)	Loss of Material/Pitting and Crevice Corrosion	Compressed Air Monitoring	VII.D-4	3.3.1-54	A

Table 3.3.2-19 Primary Containment Instrument Gas System (Continued)

Component Type	Intended Function	Material	Environment	Aging Effect Requiring Management	Aging Management Programs	NUREG-1801 Vol. 2 Item	Table 1 Item	Notes
Piping and Fittings	Structural Support	Carbon Steel	Air - Indoor (External)	Loss of Material/General Corrosion	External Surfaces Monitoring	VII.D-3	3.3.1-57	A
Piping and Fittings	Structural Support	Carbon Steel	Air/Gas - Dry (Internal)	None	Compressed Air Monitoring	VII.J-22	3.3.1-98	E, 1
Piping and Fittings	Structural Support	Carbon Steel	Air/Gas - Wetted (Internal)	Loss of Material/General, Pitting and Crevice Corrosion	Compressed Air Monitoring	VII.D-2	3.3.1-53	A
Piping and Fittings	Structural Support	Stainless Steel	Air - Indoor (External)	None	None	VII.J-15	3.3.1-94	A
Piping and Fittings	Structural Support	Stainless Steel	Air/Gas - Dry (Internal)	None	Compressed Air Monitoring	VII.J-18	3.3.1-98	E, 1
Piping and Fittings	Structural Support	Stainless Steel	Air/Gas - Wetted (Internal)	Loss of Material/Pitting and Crevice Corrosion	Compressed Air Monitoring	VII.D-4	3.3.1-54	A
Tanks (Gas Dryer)	Pressure Boundary	Carbon Steel	Air - Indoor (External)	Loss of Material/General Corrosion	External Surfaces Monitoring	VII.I-8	3.3.1-58	A
Tanks (Gas Dryer)	Pressure Boundary	Carbon Steel	Air/Gas - Wetted (Internal)	Loss of Material/General, Pitting and Crevice Corrosion	Compressed Air Monitoring	VII.D-2	3.3.1-53	C
Tanks (Moisture Separator)	Pressure Boundary	Carbon Steel	Air - Indoor (External)	Loss of Material/General Corrosion	External Surfaces Monitoring	VII.I-8	3.3.1-58	A
Tanks (Moisture Separator)	Pressure Boundary	Carbon Steel	Air/Gas - Wetted (Internal)	Loss of Material/General, Pitting and Crevice Corrosion	Compressed Air Monitoring	VII.D-2	3.3.1-53	C
Tanks (Receiver)	Pressure Boundary	Carbon Steel	Air - Indoor (External)	Loss of Material/General Corrosion	External Surfaces Monitoring	VII.I-8	3.3.1-58	A
Tanks (Receiver)	Pressure Boundary	Carbon Steel	Air/Gas - Dry (Internal)	None	Compressed Air Monitoring	VII.J-22	3.3.1-98	E, 1
Valve Body	Pressure Boundary	Carbon Steel	Air - Indoor (External)	Loss of Material/General Corrosion	External Surfaces Monitoring	VII.D-3	3.3.1-57	A
Valve Body	Pressure Boundary	Carbon Steel	Air/Gas - Dry (Internal)	None	Compressed Air Monitoring	VII.J-22	3.3.1-98	E, 1
Valve Body	Pressure Boundary	Carbon Steel	Air/Gas - Wetted (Internal)	Loss of Material/General, Pitting and Crevice Corrosion	Compressed Air Monitoring	VII.D-2	3.3.1-53	A

Table 3.3.2-19 Primary Containment Instrument Gas System (Continued)

Component Type	Intended Function	Material	Environment	Aging Effect Requiring Management	Aging Management Programs	NUREG-1801 Vol. 2 Item	Table 1 Item	Notes
Valve Body	Pressure Boundary	Stainless Steel	Air - Indoor (External)	None	None	VII.J-15	3.3.1-94	A
Valve Body	Pressure Boundary	Stainless Steel	Air/Gas - Dry (Internal)	None	Compressed Air Monitoring	VII.J-18	3.3.1-98	E, 1
Valve Body	Pressure Boundary	Stainless Steel	Air/Gas - Wetted (Internal)	Loss of Material/Pitting and Crevice Corrosion	Compressed Air Monitoring	VII.D-4	3.3.1-54	A
Valve Body	Structural Support	Stainless Steel	Air - Indoor (External)	None	None	VII.J-15	3.3.1-94	A
Valve Body	Structural Support	Stainless Steel	Air/Gas - Dry (Internal)	None	Compressed Air Monitoring	VII.J-18	3.3.1-98	E, 1

Notes	Definition of Note
A	Consistent with NUREG-1801 item for component, material, environment, and aging effect. AMP is consistent with NUREG-1801 AMP.
B	Consistent with NUREG-1801 item for component, material, environment, and aging effect. AMP takes some exceptions to NUREG-1801 AMP.
C	Component is different, but consistent with NUREG-1801 item for material, environment, and aging effect. AMP is consistent with NUREG-1801 AMP.
D	Component is different, but consistent with NUREG-1801 item for material, environment, and aging effect. AMP takes some exceptions to NUREG-1801 AMP.
E	Consistent with NUREG-1801 item for material, environment and aging effect, but a different aging management program is credited or NUREG-1801 identifies a plant-specific aging management program.
F	Material not in NUREG-1801 for this component.
G	Environment not in NUREG-1801 for this component and material.
H	Aging effect not in NUREG-1801 for this component, material and environment combination.
I	Aging effect in NUREG-1801 for this component, material and environment combination is not applicable.
J	Neither the component nor the material and environment combination is evaluated in NUREG-1801.

Plant Specific Notes:

1. The internal environment for this component is Air/Gas-Dry. The Compressed Air Monitoring program is applied to these Primary Containment Instrument Gas System Components to confirm the internal environment remains sufficiently dry to preclude aging effects.

Table 3.3.2-20
Primary Containment Leakage Rate Testing System
Summary of Aging Management Evaluation

Table 3.3.2-20 Primary Containment Leakage Rate Testing System

Component Type	Intended Function	Material	Environment	Aging Effect Requiring Management	Aging Management Programs	NUREG-1801 Vol. 2 Item	Table 1 Item	Notes
Bolting	Mechanical Closure	Carbon and Low Alloy Steel Bolting	Air - Indoor (External)	Loss of Material/General, Pitting and Crevice Corrosion	Bolting Integrity	VII.I-4	3.3.1-43	B
Bolting	Mechanical Closure	Carbon and Low Alloy Steel Bolting	Air - Indoor (External)	Loss of Preload/Thermal Effects, Gasket Creep, and Self-Loosening	Bolting Integrity	VII.I-5	3.3.1-45	B
Piping and Fittings	Pressure Boundary	Carbon Steel	Air - Indoor (External)	Loss of Material/General Corrosion	External Surfaces Monitoring	VII.D-3	3.3.1-57	A
Piping and Fittings	Pressure Boundary	Carbon Steel	Air/Gas - Wetted (Internal)	Loss of Material/General, Pitting and Crevice Corrosion	Inspection of Internal Surfaces in Miscellaneous Piping and Ducting Components	VII.G-23	3.3.1-71	A
Piping and Fittings	Pressure Boundary	Copper Alloy with less than 15% Zinc	Air - Indoor (External)	None	None	V.F-3	3.2.1-53	A
Piping and Fittings	Pressure Boundary	Copper Alloy with less than 15% Zinc	Air/Gas - Dry (Internal)	None	None	VII.J-4	3.3.1-97	A
Piping and Fittings	Pressure Boundary	Stainless Steel	Air - Indoor (External)	None	None	VII.J-15	3.3.1-94	A
Piping and Fittings	Pressure Boundary	Stainless Steel	Air/Gas - Dry (Internal)	None	None	VII.J-19	3.3.1-97	A
Piping and Fittings	Pressure Boundary	Stainless Steel	Air/Gas - Wetted (Internal)	Loss of Material/Pitting and Crevice Corrosion	Periodic Inspection	VII.D-4	3.3.1-54	E, 1
Piping and Fittings	Structural Support	Carbon Steel	Air - Indoor (External)	Loss of Material/General Corrosion	External Surfaces Monitoring	VII.D-3	3.3.1-57	A
Piping and Fittings	Structural Support	Carbon Steel	Air/Gas - Wetted (Internal)	Loss of Material/General, Pitting and Crevice Corrosion	Inspection of Internal Surfaces in Miscellaneous Piping and Ducting Components	VII.G-23	3.3.1-71	A

Table 3.3.2-20 Primary Containment Leakage Rate Testing System (Continued)

Component Type	Intended Function	Material	Environment	Aging Effect Requiring Management	Aging Management Programs	NUREG-1801 Vol. 2 Item	Table 1 Item	Notes
Piping and Fittings	Structural Support	Stainless Steel	Air - Indoor (External)	None	None	VII.J-15	3.3.1-94	A
Piping and Fittings	Structural Support	Stainless Steel	Air/Gas - Dry (Internal)	None	None	VII.J-19	3.3.1-97	A
Piping and Fittings	Structural Support	Stainless Steel	Air/Gas - Wetted (Internal)	Loss of Material/Pitting and Crevice Corrosion	Periodic Inspection	VII.D-4	3.3.1-54	E, 1
Valve Body	Pressure Boundary	Carbon Steel	Air - Indoor (External)	Loss of Material/General Corrosion	External Surfaces Monitoring	VII.D-3	3.3.1-57	A
Valve Body	Pressure Boundary	Carbon Steel	Air/Gas - Wetted (Internal)	Loss of Material/General, Pitting and Crevice Corrosion	Inspection of Internal Surfaces in Miscellaneous Piping and Ducting Components	VII.G-23	3.3.1-71	A
Valve Body	Pressure Boundary	Copper Alloy with less than 15% Zinc	Air - Indoor (External)	None	None	V.F-3	3.2.1-53	A
Valve Body	Pressure Boundary	Copper Alloy with less than 15% Zinc	Air/Gas - Dry (Internal)	None	None	VII.J-4	3.3.1-97	A
Valve Body	Pressure Boundary	Stainless Steel	Air - Indoor (External)	None	None	VII.J-15	3.3.1-94	A
Valve Body	Pressure Boundary	Stainless Steel	Air/Gas - Dry (Internal)	None	None	VII.J-19	3.3.1-97	A
Valve Body	Pressure Boundary	Stainless Steel	Air/Gas - Wetted (Internal)	Loss of Material/Pitting and Crevice Corrosion	Periodic Inspection	VII.D-4	3.3.1-54	E, 1

Notes	Definition of Note
A	Consistent with NUREG-1801 item for component, material, environment, and aging effect. AMP is consistent with NUREG-1801 AMP.
B	Consistent with NUREG-1801 item for component, material, environment, and aging effect. AMP takes some exceptions to NUREG-1801 AMP.
C	Component is different, but consistent with NUREG-1801 item for material, environment, and aging effect. AMP is consistent with NUREG-1801 AMP.
D	Component is different, but consistent with NUREG-1801 item for material, environment, and aging effect. AMP takes some exceptions to NUREG-1801 AMP.
E	Consistent with NUREG-1801 item for material, environment and aging effect, but a different aging management program is credited or NUREG-1801 identifies a plant-specific aging management program.
F	Material not in NUREG-1801 for this component.
G	Environment not in NUREG-1801 for this component and material.
H	Aging effect not in NUREG-1801 for this component, material and environment combination.
I	Aging effect in NUREG-1801 for this component, material and environment combination is not applicable.
J	Neither the component nor the material and environment combination is evaluated in NUREG-1801.

Plant Specific Notes:

1. The Periodic Inspection program is substituted to manage the aging effect(s) applicable to this component type, material, and environment combination.

Table 3.3.2-21
Process and Post-Accident Sampling Systems
Summary of Aging Management Evaluation

Table 3.3.2-21 Process and Post-Accident Sampling Systems

Component Type	Intended Function	Material	Environment	Aging Effect Requiring Management	Aging Management Programs	NUREG-1801 Vol. 2 Item	Table 1 Item	Notes
Bolting	Mechanical Closure	Carbon and Low Alloy Steel Bolting	Air - Indoor (External)	Loss of Material/General, Pitting and Crevice Corrosion	Bolting Integrity	VII.I-4	3.3.1-43	B
Bolting	Mechanical Closure	Carbon and Low Alloy Steel Bolting	Air - Indoor (External)	Loss of Preload/Thermal Effects, Gasket Creep, and Self-Loosening	Bolting Integrity	VII.I-5	3.3.1-45	B
Bolting (Class 1)	Mechanical Closure	Carbon and Low Alloy Steel Bolting	Air - Indoor (External)	Loss of Material/General, Pitting and Crevice Corrosion	Bolting Integrity	V.E-4	3.2.1-23	B
Bolting (Class 1)	Mechanical Closure	Carbon and Low Alloy Steel Bolting	Air - Indoor (External)	Loss of Preload/Thermal Effects, Gasket Creep, and Self-Loosening	Bolting Integrity	IV.C1-10	3.1.1-52	B
Class 1 Piping, Fittings and Branch Connections < NPS 4"	Pressure Boundary	Stainless Steel	Air - Indoor (External)	None	None	IV.E-2	3.1.1-86	A
Class 1 Piping, Fittings and Branch Connections < NPS 4"	Pressure Boundary	Stainless Steel	Treated Water (Internal)	Loss of Material/Pitting and Crevice Corrosion	One-Time Inspection	IV.C1-14	3.1.1-15	A
Class 1 Piping, Fittings and Branch Connections < NPS 4"	Pressure Boundary	Stainless Steel	Treated Water (Internal)	Loss of Material/Pitting and Crevice Corrosion	Water Chemistry	IV.C1-14	3.1.1-15	B
Piping and Fittings	Leakage Boundary	Stainless Steel	Air - Indoor (External)	None	None	VII.J-15	3.3.1-94	A
Piping and Fittings	Leakage Boundary	Stainless Steel	Treated Water (Internal)	Loss of Material/Pitting and Crevice Corrosion	One-Time Inspection	VII.E3-15	3.3.1-24	A
Piping and Fittings	Leakage Boundary	Stainless Steel	Treated Water (Internal)	Loss of Material/Pitting and Crevice Corrosion	Water Chemistry	VII.E3-15	3.3.1-24	B

Table 3.3.2-21 Process and Post-Accident Sampling Systems (Continued)

Component Type	Intended Function	Material	Environment	Aging Effect Requiring Management	Aging Management Programs	NUREG-1801 Vol. 2 Item	Table 1 Item	Notes
Piping and Fittings	Pressure Boundary	Carbon Steel	Air - Indoor (External)	Loss of Material/General Corrosion	External Surfaces Monitoring	VII.D-3	3.3.1-57	A
Piping and Fittings	Pressure Boundary	Carbon Steel	Air/Gas - Wetted (Internal)	Loss of Material/General, Pitting and Crevice Corrosion	Inspection of Internal Surfaces in Miscellaneous Piping and Ducting Components	VII.G-23	3.3.1-71	A
Piping and Fittings	Pressure Boundary	Stainless Steel	Air - Indoor (External)	None	None	VII.J-15	3.3.1-94	A
Piping and Fittings	Pressure Boundary	Stainless Steel	Air/Gas - Wetted (Internal)	Loss of Material/Pitting and Crevice Corrosion	Periodic Inspection	VII.D-4	3.3.1-54	E, 1
Piping and Fittings	Pressure Boundary	Stainless Steel	Treated Water (Internal)	Loss of Material/Pitting and Crevice Corrosion	One-Time Inspection	VII.E3-15	3.3.1-24	A
Piping and Fittings	Pressure Boundary	Stainless Steel	Treated Water (Internal)	Loss of Material/Pitting and Crevice Corrosion	Water Chemistry	VII.E3-15	3.3.1-24	B
Restricting Orifices	Pressure Boundary	Stainless Steel	Air - Indoor (External)	None	None	VII.J-15	3.3.1-94	A
Restricting Orifices	Pressure Boundary	Stainless Steel	Air/Gas - Wetted (Internal)	Loss of Material/Pitting and Crevice Corrosion	Periodic Inspection	VII.D-4	3.3.1-54	E, 1
Restricting Orifices	Pressure Boundary	Stainless Steel	Treated Water (Internal)	Loss of Material/Pitting and Crevice Corrosion	One-Time Inspection	VII.E3-15	3.3.1-24	A
Restricting Orifices	Pressure Boundary	Stainless Steel	Treated Water (Internal)	Loss of Material/Pitting and Crevice Corrosion	Water Chemistry	VII.E3-15	3.3.1-24	B
Restricting Orifices	Throttle	Stainless Steel	Air - Indoor (External)	None	None	VII.J-15	3.3.1-94	A
Restricting Orifices	Throttle	Stainless Steel	Air/Gas - Wetted (Internal)	Loss of Material/Pitting and Crevice Corrosion	Periodic Inspection	VII.D-4	3.3.1-54	E, 1
Restricting Orifices	Throttle	Stainless Steel	Treated Water (Internal)	Loss of Material/Pitting and Crevice Corrosion	One-Time Inspection	VII.E3-15	3.3.1-24	A
Restricting Orifices	Throttle	Stainless Steel	Treated Water (Internal)	Loss of Material/Pitting and Crevice Corrosion	Water Chemistry	VII.E3-15	3.3.1-24	B
Valve Body	Leakage Boundary	Stainless Steel	Air - Indoor (External)	None	None	VII.J-15	3.3.1-94	A
Valve Body	Leakage Boundary	Stainless Steel	Treated Water (Internal)	Loss of Material/Pitting and Crevice Corrosion	One-Time Inspection	VII.E3-15	3.3.1-24	A
Valve Body	Leakage Boundary	Stainless Steel	Treated Water (Internal)	Loss of Material/Pitting and Crevice Corrosion	Water Chemistry	VII.E3-15	3.3.1-24	B

Table 3.3.2-21 Process and Post-Accident Sampling Systems (Continued)

Component Type	Intended Function	Material	Environment	Aging Effect Requiring Management	Aging Management Programs	NUREG-1801 Vol. 2 Item	Table 1 Item	Notes
Valve Body	Pressure Boundary	Carbon Steel	Air - Indoor (External)	Loss of Material/General Corrosion	External Surfaces Monitoring	VII.D-3	3.3.1-57	A
Valve Body	Pressure Boundary	Carbon Steel	Air/Gas - Wetted (Internal)	Loss of Material/General, Pitting and Crevice Corrosion	Inspection of Internal Surfaces in Miscellaneous Piping and Ducting Components	VII.G-23	3.3.1-71	A
Valve Body	Pressure Boundary	Stainless Steel	Air - Indoor (External)	None	None	VII.J-15	3.3.1-94	A
Valve Body	Pressure Boundary	Stainless Steel	Air/Gas - Wetted (Internal)	Loss of Material/Pitting and Crevice Corrosion	Periodic Inspection	VII.D-4	3.3.1-54	E, 1
Valve Body	Pressure Boundary	Stainless Steel	Treated Water (Internal)	Loss of Material/Pitting and Crevice Corrosion	One-Time Inspection	VII.E3-15	3.3.1-24	A
Valve Body	Pressure Boundary	Stainless Steel	Treated Water (Internal)	Loss of Material/Pitting and Crevice Corrosion	Water Chemistry	VII.E3-15	3.3.1-24	B
Valve Body (Class 1)	Pressure Boundary	Stainless Steel	Air - Indoor (External)	None	None	IV.E-2	3.1.1-86	A
Valve Body (Class 1)	Pressure Boundary	Stainless Steel	Treated Water (Internal)	Loss of Material/Pitting and Crevice Corrosion	One-Time Inspection	IV.C1-14	3.1.1-15	A
Valve Body (Class 1)	Pressure Boundary	Stainless Steel	Treated Water (Internal)	Loss of Material/Pitting and Crevice Corrosion	Water Chemistry	IV.C1-14	3.1.1-15	B

Notes	Definition of Note
A	Consistent with NUREG-1801 item for component, material, environment, and aging effect. AMP is consistent with NUREG-1801 AMP.
B	Consistent with NUREG-1801 item for component, material, environment, and aging effect. AMP takes some exceptions to NUREG-1801 AMP.
C	Component is different, but consistent with NUREG-1801 item for material, environment, and aging effect. AMP is consistent with NUREG-1801 AMP.
D	Component is different, but consistent with NUREG-1801 item for material, environment, and aging effect. AMP takes some exceptions to NUREG-1801 AMP.
E	Consistent with NUREG-1801 item for material, environment and aging effect, but a different aging management program is credited or NUREG-1801 identifies a plant-specific aging management program.
F	Material not in NUREG-1801 for this component.
G	Environment not in NUREG-1801 for this component and material.
H	Aging effect not in NUREG-1801 for this component, material and environment combination.
I	Aging effect in NUREG-1801 for this component, material and environment combination is not applicable.
J	Neither the component nor the material and environment combination is evaluated in NUREG-1801.

Plant Specific Notes:

1. The Periodic Inspection program is substituted to manage the aging effect(s) applicable to this component type, material, and environment combination

Table 3.3.2-22
Radwaste System
Summary of Aging Management Evaluation

Table 3.3.2-22 Radwaste System

Component Type	Intended Function	Material	Environment	Aging Effect Requiring Management	Aging Management Programs	NUREG-1801 Vol. 2 Item	Table 1 Item	Notes
Bolting	Mechanical Closure	Carbon and Low Alloy Steel Bolting	Air - Indoor (External)	Loss of Material/General, Pitting and Crevice Corrosion	Bolting Integrity	VII.I-4	3.3.1-43	B
Bolting	Mechanical Closure	Carbon and Low Alloy Steel Bolting	Air - Indoor (External)	Loss of Preload/Thermal Effects, Gasket Creep, and Self-Loosening	Bolting Integrity	VII.I-5	3.3.1-45	B
Piping and Fittings	Leakage Boundary	Carbon Steel	Air - Indoor (External)	Loss of Material/General Corrosion	External Surfaces Monitoring	VII.D-3	3.3.1-57	A
Piping and Fittings	Leakage Boundary	Carbon Steel	Raw Water (Internal)	Loss of Material/General, Pitting, Crevice, and Microbiologically Influenced Corrosion, and Fouling	Inspection of Internal Surfaces in Miscellaneous Piping and Ducting Components	VII.G-24	3.3.1-68	E, 2
Piping and Fittings	Leakage Boundary	Stainless Steel	Air - Indoor (External)	None	None	VII.J-15	3.3.1-94	A
Piping and Fittings	Leakage Boundary	Stainless Steel	Raw Water (Internal)	Loss of Material/Pitting, Crevice, and Microbiologically Influenced Corrosion, and Fouling	Periodic Inspection	V.C-3	3.2.1-38	E, 1
Piping and Fittings	Pressure Boundary	Carbon Steel	Air - Indoor (External)	Loss of Material/General Corrosion	External Surfaces Monitoring	VII.D-3	3.3.1-57	A
Piping and Fittings	Pressure Boundary	Carbon Steel	Raw Water (Internal)	Loss of Material/General, Pitting, Crevice, and Microbiologically Influenced Corrosion, and Fouling	Inspection of Internal Surfaces in Miscellaneous Piping and Ducting Components	VII.G-24	3.3.1-68	E, 2
Pump Casing	Leakage Boundary	Stainless Steel	Air - Indoor (External)	None	None	VII.J-15	3.3.1-94	A

Table 3.3.2-22 Radwaste System (Continued)

Component Type	Intended Function	Material	Environment	Aging Effect Requiring Management	Aging Management Programs	NUREG-1801 Vol. 2 Item	Table 1 Item	Notes
Pump Casing	Leakage Boundary	Stainless Steel	Raw Water (Internal)	Loss of Material/Pitting, Crevice, and Microbiologically Influenced Corrosion, and Fouling	Periodic Inspection	V.C-3	3.2.1-38	E, 1
Tanks	Leakage Boundary	Stainless Steel	Air - Indoor (External)	None	None	VII.J-15	3.3.1-94	C
Tanks	Leakage Boundary	Stainless Steel	Raw Water (Internal)	Loss of Material/Pitting, Crevice, and Microbiologically Influenced Corrosion, and Fouling	Periodic Inspection	V.C-3	3.2.1-38	E, 1
Valve Body	Leakage Boundary	Carbon Steel	Air - Indoor (External)	Loss of Material/General Corrosion	External Surfaces Monitoring	VII.D-3	3.3.1-57	A
Valve Body	Leakage Boundary	Carbon Steel	Raw Water (Internal)	Loss of Material/General, Pitting, Crevice, and Microbiologically Influenced Corrosion, and Fouling	Inspection of Internal Surfaces in Miscellaneous Piping and Ducting Components	VII.G-24	3.3.1-68	E, 2
Valve Body	Leakage Boundary	Stainless Steel	Air - Indoor (External)	None	None	VII.J-15	3.3.1-94	A
Valve Body	Leakage Boundary	Stainless Steel	Raw Water (Internal)	Loss of Material/Pitting, Crevice, and Microbiologically Influenced Corrosion, and Fouling	Periodic Inspection	V.C-3	3.2.1-38	E, 1
Valve Body	Pressure Boundary	Carbon Steel	Air - Indoor (External)	Loss of Material/General Corrosion	External Surfaces Monitoring	VII.D-3	3.3.1-57	A
Valve Body	Pressure Boundary	Carbon Steel	Raw Water (Internal)	Loss of Material/General, Pitting, Crevice, and Microbiologically Influenced Corrosion, and Fouling	Inspection of Internal Surfaces in Miscellaneous Piping and Ducting Components	VII.G-24	3.3.1-68	E, 2
Valve Body	Pressure Boundary	Stainless Steel	Air - Indoor (External)	None	None	VII.J-15	3.3.1-94	A

Table 3.3.2-22 Radwaste System (Continued)

Component Type	Intended Function	Material	Environment	Aging Effect Requiring Management	Aging Management Programs	NUREG-1801 Vol. 2 Item	Table 1 Item	Notes
Valve Body	Pressure Boundary	Stainless Steel	Raw Water (Internal)	Loss of Material/Pitting, Crevice, and Microbiologically Influenced Corrosion, and Fouling	Periodic Inspection	V.C-3	3.2.1-38	E, 1

Notes	Definition of Note
A	Consistent with NUREG-1801 item for component, material, environment, and aging effect. AMP is consistent with NUREG-1801 AMP.
B	Consistent with NUREG-1801 item for component, material, environment, and aging effect. AMP takes some exceptions to NUREG-1801 AMP.
C	Component is different, but consistent with NUREG-1801 item for material, environment, and aging effect. AMP is consistent with NUREG-1801 AMP.
D	Component is different, but consistent with NUREG-1801 item for material, environment, and aging effect. AMP takes some exceptions to NUREG-1801 AMP.
E	Consistent with NUREG-1801 item for material, environment and aging effect, but a different aging management program is credited or NUREG-1801 identifies a plant-specific aging management program.
F	Material not in NUREG-1801 for this component.
G	Environment not in NUREG-1801 for this component and material.
H	Aging effect not in NUREG-1801 for this component, material and environment combination.
I	Aging effect in NUREG-1801 for this component, material and environment combination is not applicable.
J	Neither the component nor the material and environment combination is evaluated in NUREG-1801.

Plant Specific Notes:

1. The Periodic Inspection program is substituted to manage the aging effect(s) applicable to this component type, material, and environment combination.

2. The Inspection of Internal Surfaces in Miscellaneous Piping and Ducting program is substituted to manage the aging effect(s) applicable to this component type, material, and environment combination.

Table 3.3.2-23
Reactor Building Ventilation System
Summary of Aging Management Evaluation

Table 3.3.2-23 Reactor Building Ventilation System

Component Type	Intended Function	Material	Environment	Aging Effect Requiring Management	Aging Management Programs	NUREG-1801 Vol. 2 Item	Table 1 Item	Notes
Accumulator	Pressure Boundary	Stainless Steel	Air - Indoor (External)	None	None	VII.J-15	3.3.1-94	A
Accumulator	Pressure Boundary	Stainless Steel	Air/Gas - Dry (Internal)	None	Compressed Air Monitoring	VII.J-18	3.3.1-98	E, 1
Bolting	Mechanical Closure	Carbon and Low Alloy Steel Bolting	Air - Indoor (External)	Loss of Material/General Corrosion	External Surfaces Monitoring	VII.F1-4	3.3.1-55	A
Bolting	Mechanical Closure	Carbon and Low Alloy Steel Bolting	Air - Indoor (External)	Loss of Preload/Thermal Effects, Gasket Creep, and Self-Loosening	Bolting Integrity	VII.I-5	3.3.1-45	B
Bolting	Mechanical Closure	Carbon and Low Alloy Steel Bolting	Air - Outdoor (External)	Loss of Material/General, Pitting and Crevice Corrosion	External Surfaces Monitoring	VII.H1-8	3.3.1-60	C
Damper Housing	Pressure Boundary	Carbon Steel	Air - Indoor (External)	Loss of Material/General Corrosion	External Surfaces Monitoring	VII.F1-2	3.3.1-56	A
Damper Housing	Pressure Boundary	Carbon Steel	Air/Gas - Wetted (Internal)	Loss of Material/General, Pitting and Crevice Corrosion	Inspection of Internal Surfaces in Miscellaneous Piping and Ducting Components	VII.F1-3	3.3.1-72	A
Damper Housing	Pressure Boundary	Galvanized Steel	Air - Indoor (External)	None	None	VII.J-6	3.3.1-92	C
Damper Housing	Pressure Boundary	Galvanized Steel	Air/Gas - Wetted (Internal)	Loss of Material/General, Pitting and Crevice Corrosion	Inspection of Internal Surfaces in Miscellaneous Piping and Ducting Components	VII.F1-3	3.3.1-72	A
Door Seal	Pressure Boundary	Elastomer	Air - Indoor (External)	Hardening and Loss of Strength/Elastomer Degradation	Periodic Inspection	VII.F1-7	3.3.1-11	E, 2

Table 3.3.2-23 Reactor Building Ventilation System (Continued)

Component Type	Intended Function	Material	Environment	Aging Effect Requiring Management	Aging Management Programs	NUREG-1801 Vol. 2 Item	Table 1 Item	Notes
Door Seal	Pressure Boundary	Elastomer	Air/Gas - Wetted (Internal)	Hardening and Loss of Strength/Elastomer Degradation	Periodic Inspection	VII.F1-7	3.3.1-11	E, 2
Ducting and Components	Pressure Boundary	Galvanized Steel	Air - Indoor (External)	None	None	VII.J-6	3.3.1-92	C
Ducting and Components	Pressure Boundary	Galvanized Steel	Air/Gas - Wetted (Internal)	Loss of Material/General, Pitting and Crevice Corrosion	Inspection of Internal Surfaces in Miscellaneous Piping and Ducting Components	VII.F1-3	3.3.1-72	A
Electric Heaters (Housing)	Pressure Boundary	Stainless Steel	Air - Indoor (External)	None	None	VII.J-15	3.3.1-94	C
Electric Heaters (Housing)	Pressure Boundary	Stainless Steel	Air/Gas - Wetted (Internal)	Loss of Material/Pitting and Crevice Corrosion	Periodic Inspection	VII.F1-1	3.3.1-27	E, 2
Fan Housing	Pressure Boundary	Carbon Steel	Air - Indoor (External)	Loss of Material/General Corrosion	External Surfaces Monitoring	VII.F1-2	3.3.1-56	A
Fan Housing	Pressure Boundary	Carbon Steel	Air/Gas - Wetted (Internal)	Loss of Material/General, Pitting and Crevice Corrosion	Inspection of Internal Surfaces in Miscellaneous Piping and Ducting Components	VII.F1-3	3.3.1-72	A
Flow Device	Pressure Boundary	Copper Alloy with less than 15% Zinc	Air - Indoor (External)	None	None	VIII.I-2	3.4.1-41	A
Flow Device	Pressure Boundary	Copper Alloy with less than 15% Zinc	Air/Gas - Wetted (Internal)	Loss of Material/Pitting and Crevice Corrosion	Periodic Inspection	VII.F1-16	3.3.1-25	E, 2
Heat Exchanger Components (RBVS Supply System)	Evaluated with the Chilled Water System	Not Applicable	Not Applicable	Not Applicable	Not Applicable			
Heat Exchanger Components (Room Unit Coolers)	Evaluated with the Closed Cycle Cooling Water System	Not Applicable	Not Applicable	Not Applicable	Not Applicable			

Table 3.3.2-23 Reactor Building Ventilation System (Continued)

Component Type	Intended Function	Material	Environment	Aging Effect Requiring Management	Aging Management Programs	NUREG-1801 Vol. 2 Item	Table 1 Item	Notes
Heat Exchanger Components (SACs Room Unit Coolers)	Evaluated with the Control Area Chilled Water System	Not Applicable	Not Applicable	Not Applicable	Not Applicable			
Louver	Pressure Boundary	Aluminum	Air - Indoor (External)	None	None	V.F-2	3.2.1-50	C
Louver	Pressure Boundary	Aluminum	Air/Gas - Wetted (Internal)	Loss of Material/Pitting and Crevice Corrosion	Periodic Inspection	VII.F1-14	3.3.1-27	E, 2
Piping and Fittings	Pressure Boundary	Carbon Steel	Air - Indoor (External)	Loss of Material/General Corrosion	External Surfaces Monitoring	VII.D-3	3.3.1-57	A
Piping and Fittings	Pressure Boundary	Carbon Steel	Air/Gas - Wetted (Internal)	Loss of Material/General, Pitting and Crevice Corrosion	Inspection of Internal Surfaces in Miscellaneous Piping and Ducting Components	VII.G-23	3.3.1-71	A
Piping and Fittings	Pressure Boundary	Copper Alloy with less than 15% Zinc	Air - Indoor (External)	None	None	VIII.I-2	3.4.1-41	A
Piping and Fittings	Pressure Boundary	Copper Alloy with less than 15% Zinc	Air/Gas - Wetted (Internal)	Loss of Material/Pitting and Crevice Corrosion	Periodic Inspection	VII.F1-16	3.3.1-25	E, 2
Piping and Fittings	Pressure Boundary	Stainless Steel	Air - Indoor (External)	None	None	VII.J-15	3.3.1-94	A
Piping and Fittings	Pressure Boundary	Stainless Steel	Air/Gas - Dry (Internal)	None	Compressed Air Monitoring	VII.J-18	3.3.1-98	E, 1
Piping and Fittings	Pressure Boundary	Stainless Steel	Air/Gas - Wetted (Internal)	Loss of Material/Pitting and Crevice Corrosion	Periodic Inspection	VII.F1-1	3.3.1-27	E, 2
Piping and Fittings	Structural Support	Carbon Steel	Air - Indoor (External)	Loss of Material/General Corrosion	External Surfaces Monitoring	VII.D-3	3.3.1-57	A
Piping and Fittings	Structural Support	Carbon Steel	Air/Gas - Wetted (Internal)	Loss of Material/General, Pitting and Crevice Corrosion	Inspection of Internal Surfaces in Miscellaneous Piping and Ducting Components	VII.G-23	3.3.1-71	A
Piping and Fittings	Structural Support	Stainless Steel	Air - Indoor (External)	None	None	VII.J-15	3.3.1-94	A
Piping and Fittings	Structural Support	Stainless Steel	Air/Gas - Dry (Internal)	None	Compressed Air Monitoring	VII.J-18	3.3.1-98	E, 1

Table 3.3.2-23 Reactor Building Ventilation System (Continued)

Component Type	Intended Function	Material	Environment	Aging Effect Requiring Management	Aging Management Programs	NUREG-1801 Vol. 2 Item	Table 1 Item	Notes
Sensor Element (Temperature)	Pressure Boundary	Stainless Steel	Air - Indoor (External)	None	None	VII.J-15	3.3.1-94	A
Sensor Element (Temperature)	Pressure Boundary	Stainless Steel	Air/Gas - Wetted (Internal)	Loss of Material/Pitting and Crevice Corrosion	Periodic Inspection	VII.F1-1	3.3.1-27	E, 2
Sensor Element (radiation detector)	Pressure Boundary	Carbon Steel	Air - Indoor (External)	Loss of Material/General Corrosion	External Surfaces Monitoring	VII.D-3	3.3.1-57	A
Sensor Element (radiation detector)	Pressure Boundary	Carbon Steel	Air/Gas - Wetted (Internal)	Loss of Material/General, Pitting and Crevice Corrosion	Inspection of Internal Surfaces in Miscellaneous Piping and Ducting Components	VII.G-23	3.3.1-71	A
Sensor Element (radiation detector)	Pressure Boundary	Stainless Steel	Air - Indoor (External)	None	None	VII.J-15	3.3.1-94	A
Sensor Element (radiation detector)	Pressure Boundary	Stainless Steel	Air/Gas - Wetted (Internal)	Loss of Material/Pitting and Crevice Corrosion	Periodic Inspection	VII.F1-1	3.3.1-27	E, 2
Thermowell	Pressure Boundary	Stainless Steel	Air - Indoor (External)	None	None	VII.J-15	3.3.1-94	A
Thermowell	Pressure Boundary	Stainless Steel	Air/Gas - Wetted (Internal)	Loss of Material/Pitting and Crevice Corrosion	Periodic Inspection	VII.F1-1	3.3.1-27	E, 2
Valve Body	Pressure Boundary	Carbon Steel	Air - Indoor (External)	Loss of Material/General Corrosion	External Surfaces Monitoring	VII.D-3	3.3.1-57	A
Valve Body	Pressure Boundary	Carbon Steel	Air/Gas - Wetted (Internal)	Loss of Material/General, Pitting and Crevice Corrosion	Inspection of Internal Surfaces in Miscellaneous Piping and Ducting Components	VII.G-23	3.3.1-71	A
Valve Body	Pressure Boundary	Copper Alloy with 15% Zinc or More	Air - Indoor (External)	None	None	VIII.I-2	3.4.1-41	A
Valve Body	Pressure Boundary	Copper Alloy with 15% Zinc or More	Air/Gas - Dry (Internal)	None	Compressed Air Monitoring	VII.J-3	3.3.1-98	E, 1
Valve Body	Pressure Boundary	Copper Alloy with 15% Zinc or More	Air/Gas - Wetted (Internal)	Loss of Material/Pitting and Crevice Corrosion	Periodic Inspection	VII.F1-16	3.3.1-25	E, 2
Valve Body	Pressure Boundary	Stainless Steel	Air - Indoor (External)	None	None	VII.J-15	3.3.1-94	A
Valve Body	Pressure Boundary	Stainless Steel	Air/Gas - Dry (Internal)	None	Compressed Air Monitoring	VII.J-18	3.3.1-98	E, 1

Table 3.3.2-23 Reactor Building Ventilation System (Continued)

Component Type	Intended Function	Material	Environment	Aging Effect Requiring Management	Aging Management Programs	NUREG-1801 Vol. 2 Item	Table 1 Item	Notes
Valve Body	Pressure Boundary	Stainless Steel	Air/Gas - Wetted (Internal)	Loss of Material/Pitting and Crevice Corrosion	Periodic Inspection	VII.F1-1	3.3.1-27	E, 2

Notes	Definition of Note
A	Consistent with NUREG-1801 item for component, material, environment, and aging effect. AMP is consistent with NUREG-1801 AMP.
B	Consistent with NUREG-1801 item for component, material, environment, and aging effect. AMP takes some exceptions to NUREG-1801 AMP.
C	Component is different, but consistent with NUREG-1801 item for material, environment, and aging effect. AMP is consistent with NUREG-1801 AMP.
D	Component is different, but consistent with NUREG-1801 item for material, environment, and aging effect. AMP takes some exceptions to NUREG-1801 AMP.
E	Consistent with NUREG-1801 item for material, environment and aging effect, but a different aging management program is credited or NUREG-1801 identifies a plant-specific aging management program.
F	Material not in NUREG-1801 for this component.
G	Environment not in NUREG-1801 for this component and material.
H	Aging effect not in NUREG-1801 for this component, material and environment combination.
I	Aging effect in NUREG-1801 for this component, material and environment combination is not applicable.
J	Neither the component nor the material and environment combination is evaluated in NUREG-1801.

Plant Specific Notes:

1. The environment of dry gas used for the compressed air supply to the accumulator, valves, piping and fittings. The Compressed Air Monitoring Program is applied to confirm the internal environment remains sufficiently dry to preclude aging effects.

2. NUREG-1801 specifies a plant-specfic program. The Periodic Inspection program is used to manage the aging effect(s) applicable to this component type, material, and environment combination.

Table 3.3.2-24
Reactor Water Cleanup System
Summary of Aging Management Evaluation

Table 3.3.2-24 Reactor Water Cleanup System

Component Type	Intended Function	Material	Environment	Aging Effect Requiring Management	Aging Management Programs	NUREG-1801 Vol. 2 Item	Table 1 Item	Notes
Bolting	Mechanical Closure	Carbon and Low Alloy Steel Bolting	Air - Indoor (External)	Loss of Material/General, Pitting and Crevice Corrosion	Bolting Integrity	VII.I-4	3.3.1-43	B
Bolting	Mechanical Closure	Carbon and Low Alloy Steel Bolting	Air - Indoor (External)	Loss of Preload/Thermal Effects, Gasket Creep, and Self-Loosening	Bolting Integrity	VII.I-5	3.3.1-45	B
Bolting (Class 1)	Mechanical Closure	Carbon and Low Alloy Steel Bolting	Air - Indoor (External)	Cumulative Fatigue Damage/Fatigue	TLAA	IV.C1-11	3.1.1-4	A, 1
Bolting (Class 1)	Mechanical Closure	Carbon and Low Alloy Steel Bolting	Air - Indoor (External)	Loss of Material/General, Pitting and Crevice Corrosion	Bolting Integrity	V.E-4	3.2.1-23	B
Bolting (Class 1)	Mechanical Closure	Carbon and Low Alloy Steel Bolting	Air - Indoor (External)	Loss of Preload/Thermal Effects, Gasket Creep, and Self-Loosening	Bolting Integrity	IV.C1-10	3.1.1-52	B
Class 1 Piping, Fittings and Branch Connections < NPS 4"	Pressure Boundary	Carbon Steel	Air - Indoor (External)	Loss of Material/General Corrosion	External Surfaces Monitoring	VII.D-3	3.3.1-57	A
Class 1 Piping, Fittings and Branch Connections < NPS 4"	Pressure Boundary	Carbon Steel	Treated Water (Internal)	Cracking/Thermal and Mechanical Loading	ASME Section XI Inservice Inspection, Subsections IWB, IWC, and IWD	IV.C1-1	3.1.1-48	A
Class 1 Piping, Fittings and Branch Connections < NPS 4"	Pressure Boundary	Carbon Steel	Treated Water (Internal)	Cracking/Thermal and Mechanical Loading	Small-Bore Class 1 Piping Inspection	IV.C1-1	3.1.1-48	E, 2

Table 3.3.2-24 Reactor Water Cleanup System (Continued)

Component Type	Intended Function	Material	Environment	Aging Effect Requiring Management	Aging Management Programs	NUREG-1801 Vol. 2 Item	Table 1 Item	Notes
Class 1 Piping, Fittings and Branch Connections < NPS 4"	Pressure Boundary	Carbon Steel	Treated Water (Internal)	Cracking/Thermal and Mechanical Loading	Water Chemistry	IV.C1-1	3.1.1-48	B
Class 1 Piping, Fittings and Branch Connections < NPS 4"	Pressure Boundary	Carbon Steel	Treated Water (Internal)	Cumulative Fatigue Damage/Fatigue	TLAA	IV.C1-15	3.1.1-3	A, 1
Class 1 Piping, Fittings and Branch Connections < NPS 4"	Pressure Boundary	Carbon Steel	Treated Water (Internal)	Loss of Material/Galvanic Corrosion	One-Time Inspection	VIII.E-7	3.4.1-5	C
Class 1 Piping, Fittings and Branch Connections < NPS 4"	Pressure Boundary	Carbon Steel	Treated Water (Internal)	Loss of Material/Galvanic Corrosion	Water Chemistry	VIII.E-7	3.4.1-5	D
Class 1 Piping, Fittings and Branch Connections < NPS 4"	Pressure Boundary	Carbon Steel	Treated Water (Internal)	Loss of Material/General, Pitting and Crevice Corrosion	One-Time Inspection	IV.C1-6	3.1.1-13	C
Class 1 Piping, Fittings and Branch Connections < NPS 4"	Pressure Boundary	Carbon Steel	Treated Water (Internal)	Loss of Material/General, Pitting and Crevice Corrosion	Water Chemistry	IV.C1-6	3.1.1-13	D
Class 1 Piping, Fittings and Branch Connections < NPS 4"	Pressure Boundary	Carbon Steel	Treated Water (Internal)	Wall Thinning/Flow Accelerated Corrosion	Flow-Accelerated Corrosion	IV.C1-7	3.1.1-45	B
Class 1 Piping, Fittings and Branch Connections < NPS 4"	Pressure Boundary	Stainless Steel	Air - Indoor (External)	None	None	IV.E-2	3.1.1-86	A
Class 1 Piping, Fittings and Branch Connections < NPS 4"	Pressure Boundary	Stainless Steel	Treated Water (Internal) > 140 F	Cracking/Stress Corrosion Cracking, Thermal and Mechanical Loading	ASME Section XI Inservice Inspection, Subsections IWB, IWC, and IWD	IV.C1-1	3.1.1-48	A

Table 3.3.2-24 Reactor Water Cleanup System (Continued)

Component Type	Intended Function	Material	Environment	Aging Effect Requiring Management	Aging Management Programs	NUREG-1801 Vol. 2 Item	Table 1 Item	Notes
Class 1 Piping, Fittings and Branch Connections < NPS 4"	Pressure Boundary	Stainless Steel	Treated Water (Internal) > 140 F	Cracking/Stress Corrosion Cracking, Thermal and Mechanical Loading	Small-Bore Class 1 Piping Inspection	IV.C1-1	3.1.1-48	E, 2
Class 1 Piping, Fittings and Branch Connections < NPS 4"	Pressure Boundary	Stainless Steel	Treated Water (Internal) > 140 F	Cracking/Stress Corrosion Cracking, Thermal and Mechanical Loading	Water Chemistry	IV.C1-1	3.1.1-48	B
Class 1 Piping, Fittings and Branch Connections < NPS 4"	Pressure Boundary	Stainless Steel	Treated Water (Internal) > 140 F	Cumulative Fatigue Damage/Fatigue	TLAA	IV.C1-15	3.1.1-3	A, 1
Class 1 Piping, Fittings and Branch Connections < NPS 4"	Pressure Boundary	Stainless Steel	Treated Water (Internal) > 140 F	Loss of Material/Pitting and Crevice Corrosion	One-Time Inspection	IV.C1-14	3.1.1-15	A
Class 1 Piping, Fittings and Branch Connections < NPS 4"	Pressure Boundary	Stainless Steel	Treated Water (Internal) > 140 F	Loss of Material/Pitting and Crevice Corrosion	Water Chemistry	IV.C1-14	3.1.1-15	B
Filter Housing	Leakage Boundary	Stainless Steel	Air - Indoor (External)	None	None	VII.J-15	3.3.1-94	A
Filter Housing	Leakage Boundary	Stainless Steel	Treated Water (Internal)	Loss of Material/Pitting and Crevice Corrosion	One-Time Inspection	VII.E3-15	3.3.1-24	A
Filter Housing	Leakage Boundary	Stainless Steel	Treated Water (Internal)	Loss of Material/Pitting and Crevice Corrosion	Water Chemistry	VII.E3-15	3.3.1-24	B
Flow Element	Leakage Boundary	Stainless Steel	Air - Indoor (External)	None	None	VII.J-15	3.3.1-94	A
Flow Element	Leakage Boundary	Stainless Steel	Treated Water (Internal) > 140 F	Cracking/Stress Corrosion Cracking	One-Time Inspection	VIII.E-31	3.4.1-14	A
Flow Element	Leakage Boundary	Stainless Steel	Treated Water (Internal) > 140 F	Cracking/Stress Corrosion Cracking	Water Chemistry	VIII.E-31	3.4.1-14	B
Flow Element	Leakage Boundary	Stainless Steel	Treated Water (Internal) > 140 F	Loss of Material/Pitting and Crevice Corrosion	One-Time Inspection	VII.E3-15	3.3.1-24	A
Flow Element	Leakage Boundary	Stainless Steel	Treated Water (Internal) > 140 F	Loss of Material/Pitting and Crevice Corrosion	Water Chemistry	VII.E3-15	3.3.1-24	B

Table 3.3.2-24 Reactor Water Cleanup System (Continued)

Component Type	Intended Function	Material	Environment	Aging Effect Requiring Management	Aging Management Programs	NUREG-1801 Vol. 2 Item	Table 1 Item	Notes
Flow Element	Pressure Boundary	Stainless Steel	Air - Indoor (External)	None	None	VII.J-15	3.3.1-94	A
Flow Element	Pressure Boundary	Stainless Steel	Treated Water (Internal) > 140 F	Cracking/Stress Corrosion Cracking	One-Time Inspection	VIII.E-31	3.4.1-14	A
Flow Element	Pressure Boundary	Stainless Steel	Treated Water (Internal) > 140 F	Cracking/Stress Corrosion Cracking	Water Chemistry	VIII.E-31	3.4.1-14	B
Flow Element	Pressure Boundary	Stainless Steel	Treated Water (Internal) > 140 F	Loss of Material/Pitting and Crevice Corrosion	One-Time Inspection	VII.E3-15	3.3.1-24	A
Flow Element	Pressure Boundary	Stainless Steel	Treated Water (Internal) > 140 F	Loss of Material/Pitting and Crevice Corrosion	Water Chemistry	VII.E3-15	3.3.1-24	B
Flow Element (Class 1)	Pressure Boundary	Stainless Steel	Air - Indoor (External)	None	None	IV.E-2	3.1.1-86	A
Flow Element (Class 1)	Pressure Boundary	Stainless Steel	Treated Water (Internal) > 140 F	Cracking/Stress Corrosion Cracking	BWR Stress Corrosion Cracking	VII.E4-15	3.3.1-38	A
Flow Element (Class 1)	Pressure Boundary	Stainless Steel	Treated Water (Internal) > 140 F	Cracking/Stress Corrosion Cracking	Water Chemistry	VII.E4-15	3.3.1-38	B
Flow Element (Class 1)	Pressure Boundary	Stainless Steel	Treated Water (Internal) > 140 F	Loss of Material/Pitting and Crevice Corrosion	One-Time Inspection	IV.C1-14	3.1.1-15	A
Flow Element (Class 1)	Pressure Boundary	Stainless Steel	Treated Water (Internal) > 140 F	Loss of Material/Pitting and Crevice Corrosion	Water Chemistry	IV.C1-14	3.1.1-15	B
Heat Exchanger Components (Non-Regen)	Leakage Boundary	Carbon Steel (Tube Side Components)	Air - Indoor (External)	Loss of Material/General Corrosion	External Surfaces Monitoring	VII.I-8	3.3.1-58	A
Heat Exchanger Components (Non-Regen)	Leakage Boundary	Carbon Steel (Tube Side Components)	Treated Water (Internal)	Loss of Material/General, Pitting and Crevice Corrosion	One-Time Inspection	VII.E3-18	3.3.1-17	C
Heat Exchanger Components (Non-Regen)	Leakage Boundary	Carbon Steel (Tube Side Components)	Treated Water (Internal)	Loss of Material/General, Pitting and Crevice Corrosion	Water Chemistry	VII.E3-18	3.3.1-17	D
Heat Exchanger Components (Non-Regen)	Leakage Boundary	Carbon Steel (Tube Side Components)	Treated Water (Internal)	Wall Thinning/Flow Accelerated Corrosion	Flow-Accelerated Corrosion	VIII.D2-8	3.4.1-29	D

Table 3.3.2-24 Reactor Water Cleanup System (Continued)

Component Type	Intended Function	Material	Environment	Aging Effect Requiring Management	Aging Management Programs	NUREG-1801 Vol. 2 Item	Table 1 Item	Notes
Heat Exchanger Components (Non-Regen)	Shell Side components evaluated with the Closed Cycle Cooling Water System	Not Applicable	Not Applicable	Not Applicable	Not Applicable			
Heat Exchanger Components (Pump HX)	Leakage Boundary	Stainless Steel (Tube Side Components)	Air - Indoor (External)	None	None	VII.J-15	3.3.1-94	C
Heat Exchanger Components (Pump HX)	Leakage Boundary	Stainless Steel (Tube Side Components)	Treated Water (Internal) > 140 F	Cracking/Stress Corrosion Cracking	One-Time Inspection	VII.E3-3	3.3.1-5	E, 3
Heat Exchanger Components (Pump HX)	Leakage Boundary	Stainless Steel (Tube Side Components)	Treated Water (Internal) > 140 F	Cracking/Stress Corrosion Cracking	Water Chemistry	VII.E3-3	3.3.1-5	E, 3
Heat Exchanger Components (Pump HX)	Leakage Boundary	Stainless Steel (Tube Side Components)	Treated Water (Internal) > 140 F	Loss of Material/Pitting and Crevice Corrosion	One-Time Inspection	VII.A4-2	3.3.1-23	A
Heat Exchanger Components (Pump HX)	Leakage Boundary	Stainless Steel (Tube Side Components)	Treated Water (Internal) > 140 F	Loss of Material/Pitting and Crevice Corrosion	Water Chemistry	VII.A4-2	3.3.1-23	B
Heat Exchanger Components (Regen)	Leakage Boundary	Carbon Steel (Shell Side Components)	Air - Indoor (External)	Loss of Material/General Corrosion	External Surfaces Monitoring	VII.I-8	3.3.1-58	A
Heat Exchanger Components (Regen)	Leakage Boundary	Carbon Steel (Shell Side Components)	Treated Water (Internal)	Loss of Material/General, Pitting and Crevice Corrosion	One-Time Inspection	VII.E3-18	3.3.1-17	C
Heat Exchanger Components (Regen)	Leakage Boundary	Carbon Steel (Shell Side Components)	Treated Water (Internal)	Loss of Material/General, Pitting and Crevice Corrosion	Water Chemistry	VII.E3-18	3.3.1-17	D
Heat Exchanger Components (Regen)	Leakage Boundary	Carbon Steel (Shell Side Components)	Treated Water (Internal)	Wall Thinning/Flow Accelerated Corrosion	Flow-Accelerated Corrosion	VIII.D2-8	3.4.1-29	D

Table 3.3.2-24 Reactor Water Cleanup System (Continued)

Component Type	Intended Function	Material	Environment	Aging Effect Requiring Management	Aging Management Programs	NUREG-1801 Vol. 2 Item	Table 1 Item	Notes
Heat Exchanger Components (Regen)	Leakage Boundary	Carbon Steel (Tube Side Components)	Air - Indoor (External)	Loss of Material/General Corrosion	External Surfaces Monitoring	VII.I-8	3.3.1-58	A
Heat Exchanger Components (Regen)	Leakage Boundary	Carbon Steel (Tube Side Components)	Treated Water (Internal)	Loss of Material/General, Pitting and Crevice Corrosion	One-Time Inspection	VII.E3-18	3.3.1-17	C
Heat Exchanger Components (Regen)	Leakage Boundary	Carbon Steel (Tube Side Components)	Treated Water (Internal)	Loss of Material/General, Pitting and Crevice Corrosion	Water Chemistry	VII.E3-18	3.3.1-17	D
Heat Exchanger Components (Regen)	Leakage Boundary	Carbon Steel (Tube Side Components)	Treated Water (Internal)	Wall Thinning/Flow Accelerated Corrosion	Flow-Accelerated Corrosion	VIII.D2-8	3.4.1-29	D
Piping and Fittings	Leakage Boundary	Carbon Steel	Air - Indoor (External)	Loss of Material/General Corrosion	External Surfaces Monitoring	VII.D-3	3.3.1-57	A
Piping and Fittings	Leakage Boundary	Carbon Steel	Treated Water (Internal)	Loss of Material/Galvanic Corrosion	One-Time Inspection	VIII.E-7	3.4.1-5	C
Piping and Fittings	Leakage Boundary	Carbon Steel	Treated Water (Internal)	Loss of Material/Galvanic Corrosion	Water Chemistry	VIII.E-7	3.4.1-5	D
Piping and Fittings	Leakage Boundary	Carbon Steel	Treated Water (Internal)	Loss of Material/General, Pitting and Crevice Corrosion	One-Time Inspection	VII.E3-18	3.3.1-17	A
Piping and Fittings	Leakage Boundary	Carbon Steel	Treated Water (Internal)	Loss of Material/General, Pitting and Crevice Corrosion	Water Chemistry	VII.E3-18	3.3.1-17	B
Piping and Fittings	Leakage Boundary	Carbon Steel	Treated Water (Internal)	Wall Thinning/Flow Accelerated Corrosion	Flow-Accelerated Corrosion	VIII.D2-8	3.4.1-29	B
Piping and Fittings	Leakage Boundary	Stainless Steel	Air - Indoor (External)	None	None	VII.J-15	3.3.1-94	A
Piping and Fittings	Leakage Boundary	Stainless Steel	Treated Water (Internal) > 140 F	Cracking/Stress Corrosion Cracking	One-Time Inspection	VIII.E-31	3.4.1-14	A
Piping and Fittings	Leakage Boundary	Stainless Steel	Treated Water (Internal) > 140 F	Cracking/Stress Corrosion Cracking	Water Chemistry	VIII.E-31	3.4.1-14	B
Piping and Fittings	Leakage Boundary	Stainless Steel	Treated Water (Internal) > 140 F	Loss of Material/Pitting and Crevice Corrosion	One-Time Inspection	VII.E3-15	3.3.1-24	A

Table 3.3.2-24 Reactor Water Cleanup System (Continued)

Component Type	Intended Function	Material	Environment	Aging Effect Requiring Management	Aging Management Programs	NUREG-1801 Vol. 2 Item	Table 1 Item	Notes
Piping and Fittings	Leakage Boundary	Stainless Steel	Treated Water (Internal) > 140 F	Loss of Material/Pitting and Crevice Corrosion	Water Chemistry	VII.E3-15	3.3.1-24	B
Piping and Fittings	Pressure Boundary	Carbon Steel	Air - Indoor (External)	Loss of Material/General Corrosion	External Surfaces Monitoring	VII.D-3	3.3.1-57	A
Piping and Fittings	Pressure Boundary	Carbon Steel	Treated Water (Internal)	Cumulative Fatigue Damage/Fatigue	TLAA	VIII.D2-6	3.4.1-1	A, 1
Piping and Fittings	Pressure Boundary	Carbon Steel	Treated Water (Internal)	Loss of Material/Galvanic Corrosion	One-Time Inspection	VIII.E-7	3.4.1-5	C
Piping and Fittings	Pressure Boundary	Carbon Steel	Treated Water (Internal)	Loss of Material/Galvanic Corrosion	Water Chemistry	VIII.E-7	3.4.1-5	D
Piping and Fittings	Pressure Boundary	Carbon Steel	Treated Water (Internal)	Loss of Material/General, Pitting and Crevice Corrosion	One-Time Inspection	VII.E3-18	3.3.1-17	A
Piping and Fittings	Pressure Boundary	Carbon Steel	Treated Water (Internal)	Loss of Material/General, Pitting and Crevice Corrosion	Water Chemistry	VII.E3-18	3.3.1-17	B
Piping and Fittings	Pressure Boundary	Carbon Steel	Treated Water (Internal)	Wall Thinning/Flow Accelerated Corrosion	Flow-Accelerated Corrosion	VIII.D2-8	3.4.1-29	B
Piping and Fittings	Pressure Boundary	Stainless Steel	Air - Indoor (External)	None	None	VII.J-15	3.3.1-94	A
Piping and Fittings	Pressure Boundary	Stainless Steel	Treated Water (Internal) > 140 F	Cracking/Stress Corrosion Cracking	One-Time Inspection	VIII.E-31	3.4.1-14	A
Piping and Fittings	Pressure Boundary	Stainless Steel	Treated Water (Internal) > 140 F	Cracking/Stress Corrosion Cracking	Water Chemistry	VIII.E-31	3.4.1-14	B
Piping and Fittings	Pressure Boundary	Stainless Steel	Treated Water (Internal) > 140 F	Cumulative Fatigue Damage/Fatigue	TLAA	VII.E3-14	3.3.1-2	A, 1
Piping and Fittings	Pressure Boundary	Stainless Steel	Treated Water (Internal) > 140 F	Loss of Material/Pitting and Crevice Corrosion	One-Time Inspection	VII.E3-15	3.3.1-24	A
Piping and Fittings	Pressure Boundary	Stainless Steel	Treated Water (Internal) > 140 F	Loss of Material/Pitting and Crevice Corrosion	Water Chemistry	VII.E3-15	3.3.1-24	B
Piping and Fittings (Class 1)	Pressure Boundary	Carbon Steel	Air - Indoor (External)	Loss of Material/General Corrosion	External Surfaces Monitoring	VII.D-3	3.3.1-57	A
Piping and Fittings (Class 1)	Pressure Boundary	Carbon Steel	Treated Water (Internal)	Cumulative Fatigue Damage/Fatigue	TLAA	IV.C1-15	3.1.1-3	A, 1

Table 3.3.2-24 Reactor Water Cleanup System (Continued)

Component Type	Intended Function	Material	Environment	Aging Effect Requiring Management	Aging Management Programs	NUREG-1801 Vol. 2 Item	Table 1 Item	Notes
Piping and Fittings (Class 1)	Pressure Boundary	Carbon Steel	Treated Water (Internal)	Loss of Material/Galvanic Corrosion	One-Time Inspection	VIII.E-7	3.4.1-5	C
Piping and Fittings (Class 1)	Pressure Boundary	Carbon Steel	Treated Water (Internal)	Loss of Material/Galvanic Corrosion	Water Chemistry	VIII.E-7	3.4.1-5	D
Piping and Fittings (Class 1)	Pressure Boundary	Carbon Steel	Treated Water (Internal)	Loss of Material/General, Pitting and Crevice Corrosion	One-Time Inspection	IV.C1-6	3.1.1-13	C
Piping and Fittings (Class 1)	Pressure Boundary	Carbon Steel	Treated Water (Internal)	Loss of Material/General, Pitting and Crevice Corrosion	Water Chemistry	IV.C1-6	3.1.1-13	D
Piping and Fittings (Class 1)	Pressure Boundary	Carbon Steel	Treated Water (Internal)	Wall Thinning/Flow Accelerated Corrosion	Flow-Accelerated Corrosion	IV.C1-7	3.1.1-45	B
Pump Casing (Holding)	Leakage Boundary	Carbon Steel	Air - Indoor (External)	Loss of Material/General Corrosion	External Surfaces Monitoring	VII.I-8	3.3.1-58	A
Pump Casing (Holding)	Leakage Boundary	Carbon Steel	Treated Water (Internal)	Loss of Material/General, Pitting and Crevice Corrosion	One-Time Inspection	VII.E3-18	3.3.1-17	A
Pump Casing (Holding)	Leakage Boundary	Carbon Steel	Treated Water (Internal)	Loss of Material/General, Pitting and Crevice Corrosion	Water Chemistry	VII.E3-18	3.3.1-17	B
Pump Casing (Precoat)	Leakage Boundary	Carbon Steel	Air - Indoor (External)	Loss of Material/General Corrosion	External Surfaces Monitoring	VII.I-8	3.3.1-58	A
Pump Casing (Precoat)	Leakage Boundary	Carbon Steel	Treated Water (Internal)	Loss of Material/General, Pitting and Crevice Corrosion	One-Time Inspection	VII.E3-18	3.3.1-17	A
Pump Casing (Precoat)	Leakage Boundary	Carbon Steel	Treated Water (Internal)	Loss of Material/General, Pitting and Crevice Corrosion	Water Chemistry	VII.E3-18	3.3.1-17	B
Pump Casing (Recirculation)	Leakage Boundary	Stainless Steel	Air - Indoor (External)	None	None	VII.J-15	3.3.1-94	A
Pump Casing (Recirculation)	Leakage Boundary	Stainless Steel	Treated Water (Internal) > 140 F	Cracking/Stress Corrosion Cracking	One-Time Inspection	VIII.E-31	3.4.1-14	A
Pump Casing (Recirculation)	Leakage Boundary	Stainless Steel	Treated Water (Internal) > 140 F	Cracking/Stress Corrosion Cracking	Water Chemistry	VIII.E-31	3.4.1-14	B

Table 3.3.2-24 Reactor Water Cleanup System (Continued)

Component Type	Intended Function	Material	Environment	Aging Effect Requiring Management	Aging Management Programs	NUREG-1801 Vol. 2 Item	Table 1 Item	Notes
Pump Casing (Recirculation)	Leakage Boundary	Stainless Steel	Treated Water (Internal) > 140 F	Loss of Material/Pitting and Crevice Corrosion	One-Time Inspection	VII.E3-15	3.3.1-24	A
Pump Casing (Recirculation)	Leakage Boundary	Stainless Steel	Treated Water (Internal) > 140 F	Loss of Material/Pitting and Crevice Corrosion	Water Chemistry	VII.E3-15	3.3.1-24	B
Restricting Orifices	Leakage Boundary	Stainless Steel	Air - Indoor (External)	None	None	VII.J-15	3.3.1-94	A
Restricting Orifices	Leakage Boundary	Stainless Steel	Treated Water (Internal)	Loss of Material/Pitting and Crevice Corrosion	One-Time Inspection	VII.E3-15	3.3.1-24	A
Restricting Orifices	Leakage Boundary	Stainless Steel	Treated Water (Internal)	Loss of Material/Pitting and Crevice Corrosion	Water Chemistry	VII.E3-15	3.3.1-24	B
Restricting Orifices	Pressure Boundary	Stainless Steel	Air - Indoor (External)	None	None	VII.J-15	3.3.1-94	A
Restricting Orifices	Pressure Boundary	Stainless Steel	Treated Water (Internal)	Loss of Material/Pitting and Crevice Corrosion	One-Time Inspection	VII.E3-15	3.3.1-24	A
Restricting Orifices	Pressure Boundary	Stainless Steel	Treated Water (Internal)	Loss of Material/Pitting and Crevice Corrosion	Water Chemistry	VII.E3-15	3.3.1-24	B
Restricting Orifices	Throttle	Stainless Steel	Air - Indoor (External)	None	None	VII.J-15	3.3.1-94	A
Restricting Orifices	Throttle	Stainless Steel	Treated Water (Internal)	Loss of Material/Pitting and Crevice Corrosion	One-Time Inspection	VII.E3-15	3.3.1-24	A
Restricting Orifices	Throttle	Stainless Steel	Treated Water (Internal)	Loss of Material/Pitting and Crevice Corrosion	Water Chemistry	VII.E3-15	3.3.1-24	B
Restricting Orifices (Class 1)	Pressure Boundary	Stainless Steel	Air - Indoor (External)	None	None	IV.E-2	3.1.1-86	A
Restricting Orifices (Class 1)	Pressure Boundary	Stainless Steel	Treated Water (Internal) > 140 F	Cracking/Stress Corrosion Cracking	ASME Section XI Inservice Inspection, Subsections IWB, IWC, and IWD	IV.C1-1	3.1.1-48	E, 4
Restricting Orifices (Class 1)	Pressure Boundary	Stainless Steel	Treated Water (Internal) > 140 F	Cracking/Stress Corrosion Cracking	Water Chemistry	IV.C1-1	3.1.1-48	E, 4
Restricting Orifices (Class 1)	Pressure Boundary	Stainless Steel	Treated Water (Internal) > 140 F	Loss of Material/Pitting and Crevice Corrosion	One-Time Inspection	IV.C1-14	3.1.1-15	A
Restricting Orifices (Class 1)	Pressure Boundary	Stainless Steel	Treated Water (Internal) > 140 F	Loss of Material/Pitting and Crevice Corrosion	Water Chemistry	IV.C1-14	3.1.1-15	B
Restricting Orifices (Class 1)	Throttle	Stainless Steel	Air - Indoor (External)	None	None	IV.E-2	3.1.1-86	A

Table 3.3.2-24 Reactor Water Cleanup System (Continued)

Component Type	Intended Function	Material	Environment	Aging Effect Requiring Management	Aging Management Programs	NUREG-1801 Vol. 2 Item	Table 1 Item	Notes
Restricting Orifices (Class 1)	Throttle	Stainless Steel	Treated Water (Internal) > 140 F	Cracking/Stress Corrosion Cracking	ASME Section XI Inservice Inspection, Subsections IWB, IWC, and IWD	IV.C1-1	3.1.1-48	E, 4
Restricting Orifices (Class 1)	Throttle	Stainless Steel	Treated Water (Internal) > 140 F	Cracking/Stress Corrosion Cracking	Water Chemistry	IV.C1-1	3.1.1-48	E, 4
Restricting Orifices (Class 1)	Throttle	Stainless Steel	Treated Water (Internal) > 140 F	Loss of Material/Pitting and Crevice Corrosion	One-Time Inspection	IV.C1-14	3.1.1-15	A
Restricting Orifices (Class 1)	Throttle	Stainless Steel	Treated Water (Internal) > 140 F	Loss of Material/Pitting and Crevice Corrosion	Water Chemistry	IV.C1-14	3.1.1-15	B
Sensor Element	Leakage Boundary	Stainless Steel	Air - Indoor (External)	None	None	VII.J-15	3.3.1-94	A
Sensor Element	Leakage Boundary	Stainless Steel	Treated Water (Internal) > 140 F	Cracking/Stress Corrosion Cracking	One-Time Inspection	VIII.E-31	3.4.1-14	A
Sensor Element	Leakage Boundary	Stainless Steel	Treated Water (Internal) > 140 F	Cracking/Stress Corrosion Cracking	Water Chemistry	VIII.E-31	3.4.1-14	B
Sensor Element	Leakage Boundary	Stainless Steel	Treated Water (Internal) > 140 F	Loss of Material/Pitting and Crevice Corrosion	One-Time Inspection	VII.E3-15	3.3.1-24	A
Sensor Element	Leakage Boundary	Stainless Steel	Treated Water (Internal) > 140 F	Loss of Material/Pitting and Crevice Corrosion	Water Chemistry	VII.E3-15	3.3.1-24	B
Sight Glasses	Leakage Boundary	Carbon Steel	Air - Indoor (External)	Loss of Material/General Corrosion	External Surfaces Monitoring	VII.D-3	3.3.1-57	A
Sight Glasses	Leakage Boundary	Carbon Steel	Treated Water (Internal)	Loss of Material/General, Pitting and Crevice Corrosion	One-Time Inspection	VII.E3-18	3.3.1-17	A
Sight Glasses	Leakage Boundary	Carbon Steel	Treated Water (Internal)	Loss of Material/General, Pitting and Crevice Corrosion	Water Chemistry	VII.E3-18	3.3.1-17	B
Sight Glasses	Leakage Boundary	Glass	Air - Indoor (External)	None	None	VII.J-7	3.3.1-93	A
Sight Glasses	Leakage Boundary	Glass	Treated Water (Internal)	None	None	VII.J-13	3.3.1-93	A
Strainer Body	Leakage Boundary	Carbon Steel	Air - Indoor (External)	Loss of Material/General Corrosion	External Surfaces Monitoring	VII.D-3	3.3.1-57	A

Table 3.3.2-24 Reactor Water Cleanup System (Continued)

Component Type	Intended Function	Material	Environment	Aging Effect Requiring Management	Aging Management Programs	NUREG-1801 Vol. 2 Item	Table 1 Item	Notes
Strainer Body	Leakage Boundary	Carbon Steel	Treated Water (Internal)	Loss of Material/General, Pitting and Crevice Corrosion	One-Time Inspection	VII.E3-18	3.3.1-17	A
Strainer Body	Leakage Boundary	Carbon Steel	Treated Water (Internal)	Loss of Material/General, Pitting and Crevice Corrosion	Water Chemistry	VII.E3-18	3.3.1-17	B
Tanks (Autoclave)	Leakage Boundary	Stainless Steel	Air - Indoor (External)	None	None	VII.J-15	3.3.1-94	C
Tanks (Autoclave)	Leakage Boundary	Stainless Steel	Treated Water (Internal)	Loss of Material/Pitting and Crevice Corrosion	One-Time Inspection	VII.E3-15	3.3.1-24	C
Tanks (Autoclave)	Leakage Boundary	Stainless Steel	Treated Water (Internal)	Loss of Material/Pitting and Crevice Corrosion	Water Chemistry	VII.E3-15	3.3.1-24	D
Tanks (Demineralizer)	Leakage Boundary	Stainless Steel	Air - Indoor (External)	None	None	VII.J-15	3.3.1-94	C
Tanks (Demineralizer)	Leakage Boundary	Stainless Steel	Treated Water (Internal)	Loss of Material/Pitting and Crevice Corrosion	One-Time Inspection	VII.E3-15	3.3.1-24	C
Tanks (Demineralizer)	Leakage Boundary	Stainless Steel	Treated Water (Internal)	Loss of Material/Pitting and Crevice Corrosion	Water Chemistry	VII.E3-15	3.3.1-24	D
Tanks (Precoat)	Leakage Boundary	Carbon Steel	Air - Indoor (External)	Loss of Material/General Corrosion	External Surfaces Monitoring	VII.I-8	3.3.1-58	A
Tanks (Precoat)	Leakage Boundary	Carbon Steel	Treated Water (Internal)	Loss of Material/General, Pitting and Crevice Corrosion	One-Time Inspection	VII.E3-18	3.3.1-17	C
Tanks (Precoat)	Leakage Boundary	Carbon Steel	Treated Water (Internal)	Loss of Material/General, Pitting and Crevice Corrosion	Water Chemistry	VII.E3-18	3.3.1-17	D
Thermowell	Leakage Boundary	Stainless Steel	Air - Indoor (External)	None	None	VII.J-15	3.3.1-94	A
Thermowell	Leakage Boundary	Stainless Steel	Treated Water (Internal) > 140 F	Cracking/Stress Corrosion Cracking	One-Time Inspection	VIII.E-31	3.4.1-14	A
Thermowell	Leakage Boundary	Stainless Steel	Treated Water (Internal) > 140 F	Cracking/Stress Corrosion Cracking	Water Chemistry	VIII.E-31	3.4.1-14	B
Thermowell	Leakage Boundary	Stainless Steel	Treated Water (Internal) > 140 F	Loss of Material/Pitting and Crevice Corrosion	One-Time Inspection	VII.E3-15	3.3.1-24	A

Table 3.3.2-24 Reactor Water Cleanup System (Continued)

Component Type	Intended Function	Material	Environment	Aging Effect Requiring Management	Aging Management Programs	NUREG-1801 Vol. 2 Item	Table 1 Item	Notes
Thermowell	Leakage Boundary	Stainless Steel	Treated Water (Internal) > 140 F	Loss of Material/Pitting and Crevice Corrosion	Water Chemistry	VII.E3-15	3.3.1-24	B
Thermowell (Class 1)	Pressure Boundary	Carbon Steel	Air - Indoor (External)	Loss of Material/General Corrosion	External Surfaces Monitoring	VII.D-3	3.3.1-57	A
Thermowell (Class 1)	Pressure Boundary	Carbon Steel	Treated Water (Internal)	Loss of Material/General, Pitting and Crevice Corrosion	One-Time Inspection	IV.C1-6	3.1.1-13	C
Thermowell (Class 1)	Pressure Boundary	Carbon Steel	Treated Water (Internal)	Loss of Material/General, Pitting and Crevice Corrosion	Water Chemistry	IV.C1-6	3.1.1-13	D
Valve Body	Leakage Boundary	Carbon Steel	Air - Indoor (External)	Loss of Material/General Corrosion	External Surfaces Monitoring	VII.D-3	3.3.1-57	A
Valve Body	Leakage Boundary	Carbon Steel	Treated Water (Internal)	Loss of Material/General, Pitting and Crevice Corrosion	One-Time Inspection	VII.E3-18	3.3.1-17	A
Valve Body	Leakage Boundary	Carbon Steel	Treated Water (Internal)	Loss of Material/General, Pitting and Crevice Corrosion	Water Chemistry	VII.E3-18	3.3.1-17	B
Valve Body	Leakage Boundary	Carbon Steel	Treated Water (Internal)	Wall Thinning/Flow Accelerated Corrosion	Flow-Accelerated Corrosion	VIII.D2-8	3.4.1-29	B
Valve Body	Leakage Boundary	Stainless Steel	Air - Indoor (External)	None	None	VII.J-15	3.3.1-94	A
Valve Body	Leakage Boundary	Stainless Steel	Treated Water (Internal) > 140 F	Cracking/Stress Corrosion Cracking	One-Time Inspection	VIII.E-31	3.4.1-14	A
Valve Body	Leakage Boundary	Stainless Steel	Treated Water (Internal) > 140 F	Cracking/Stress Corrosion Cracking	Water Chemistry	VIII.E-31	3.4.1-14	B
Valve Body	Leakage Boundary	Stainless Steel	Treated Water (Internal) > 140 F	Loss of Material/Pitting and Crevice Corrosion	One-Time Inspection	VII.E3-15	3.3.1-24	A
Valve Body	Leakage Boundary	Stainless Steel	Treated Water (Internal) > 140 F	Loss of Material/Pitting and Crevice Corrosion	Water Chemistry	VII.E3-15	3.3.1-24	B
Valve Body	Pressure Boundary	Carbon Steel	Air - Indoor (External)	Loss of Material/General Corrosion	External Surfaces Monitoring	VII.D-3	3.3.1-57	A
Valve Body	Pressure Boundary	Carbon Steel	Treated Water (Internal)	Loss of Material/General, Pitting and Crevice Corrosion	One-Time Inspection	VII.E3-18	3.3.1-17	A

Table 3.3.2-24 Reactor Water Cleanup System (Continued)

Component Type	Intended Function	Material	Environment	Aging Effect Requiring Management	Aging Management Programs	NUREG-1801 Vol. 2 Item	Table 1 Item	Notes
Valve Body	Pressure Boundary	Carbon Steel	Treated Water (Internal)	Loss of Material/General, Pitting and Crevice Corrosion	Water Chemistry	VII.E3-18	3.3.1-17	B
Valve Body	Pressure Boundary	Carbon Steel	Treated Water (Internal)	Wall Thinning/Flow Accelerated Corrosion	Flow-Accelerated Corrosion	VIII.D2-8	3.4.1-29	B
Valve Body	Pressure Boundary	Stainless Steel	Air - Indoor (External)	None	None	VII.J-15	3.3.1-94	A
Valve Body	Pressure Boundary	Stainless Steel	Treated Water (Internal)	Loss of Material/Pitting and Crevice Corrosion	One-Time Inspection	VII.E3-15	3.3.1-24	A
Valve Body	Pressure Boundary	Stainless Steel	Treated Water (Internal)	Loss of Material/Pitting and Crevice Corrosion	Water Chemistry	VII.E3-15	3.3.1-24	B
Valve Body (Class 1)	Pressure Boundary	Carbon Steel	Air - Indoor (External)	Loss of Material/General Corrosion	External Surfaces Monitoring	VII.D-3	3.3.1-57	A
Valve Body (Class 1)	Pressure Boundary	Carbon Steel	Treated Water (Internal)	Cumulative Fatigue Damage/Fatigue	TLAA	IV.C1-15	3.1.1-3	A, 1
Valve Body (Class 1)	Pressure Boundary	Carbon Steel	Treated Water (Internal)	Loss of Material/General, Pitting and Crevice Corrosion	One-Time Inspection	IV.C1-6	3.1.1-13	C
Valve Body (Class 1)	Pressure Boundary	Carbon Steel	Treated Water (Internal)	Loss of Material/General, Pitting and Crevice Corrosion	Water Chemistry	IV.C1-6	3.1.1-13	D
Valve Body (Class 1)	Pressure Boundary	Carbon Steel	Treated Water (Internal)	Wall Thinning/Flow Accelerated Corrosion	Flow-Accelerated Corrosion	IV.C1-7	3.1.1-45	B
Valve Body (Class 1)	Pressure Boundary	Stainless Steel	Air - Indoor (External)	None	None	IV.E-2	3.1.1-86	A
Valve Body (Class 1)	Pressure Boundary	Stainless Steel	Treated Water (Internal)	Loss of Material/Pitting and Crevice Corrosion	One-Time Inspection	IV.C1-14	3.1.1-15	A
Valve Body (Class 1)	Pressure Boundary	Stainless Steel	Treated Water (Internal)	Loss of Material/Pitting and Crevice Corrosion	Water Chemistry	IV.C1-14	3.1.1-15	B

Notes	Definition of Note
A	Consistent with NUREG-1801 item for component, material, environment, and aging effect. AMP is consistent with NUREG-1801 AMP.
B	Consistent with NUREG-1801 item for component, material, environment, and aging effect. AMP takes some exceptions to NUREG-1801 AMP.
C	Component is different, but consistent with NUREG-1801 item for material, environment, and aging effect. AMP is consistent with NUREG-1801 AMP.
D	Component is different, but consistent with NUREG-1801 item for material, environment, and aging effect. AMP takes some exceptions to NUREG-1801 AMP.
E	Consistent with NUREG-1801 item for material, environment and aging effect, but a different aging management program is credited or NUREG-1801 identifies a plant-specific aging management program.
F	Material not in NUREG-1801 for this component.
G	Environment not in NUREG-1801 for this component and material.
H	Aging effect not in NUREG-1801 for this component, material and environment combination.
I	Aging effect in NUREG-1801 for this component, material and environment combination is not applicable.
J	Neither the component nor the material and environment combination is evaluated in NUREG-1801.

Plant Specific Notes:

1. The TLAA designation in the Aging Management Program column indicates fatigue of this component is evaluated in Section 4.3.

2. The NUREG-1801 "One-Time Inspection of ASME Code Class 1 Small-Bore Piping" aging management program is applicable only to plants that have not experienced cracking of ASME Code Class 1 small-bore piping. Based on previous Hope Creek operating experience with Class 1 small-bore pipe cracking, a new plant-specific periodic inspection program will be used. The "Small-Bore Class 1 Piping Inspection" aging management program is a plant-specific periodic program that will be implemented to manage cracking by periodic volumetric examinations of small-bore Class 1 piping.

3. NUREG-1801 specifies a plant-specific program. The Water Chemistry program is used to manage the aging effect(s) applicable to this component type, material, and environment combination. The One-Time Inspection program is used to confirm the effectiveness of the Water Chemistry program to manage the identified aging effects.

4. The Water Chemistry and ASME Section XI In-service Inspection, Subsections IWB, IWC, and IWD aging management programs will be used to manage the aging effect of cracking in restricting orifices < NPS 4".

Table 3.3.2-25
Remote Shutdown Panel Room HVAC System
Summary of Aging Management Evaluation

Table 3.3.2-25 Remote Shutdown Panel Room HVAC System

Component Type	Intended Function	Material	Environment	Aging Effect Requiring Management	Aging Management Programs	NUREG-1801 Vol. 2 Item	Table 1 Item	Notes
Bolting	Mechanical Closure	Carbon and Low Alloy Steel Bolting	Air - Indoor (External)	Loss of Material/General Corrosion	External Surfaces Monitoring	VII.F1-4	3.3.1-55	A
Damper Housing	Pressure Boundary	Galvanized Steel	Air - Indoor (External)	None	None	VII.J-6	3.3.1-92	C
Damper Housing	Pressure Boundary	Galvanized Steel	Air/Gas - Wetted (Internal)	Loss of Material/General, Pitting and Crevice Corrosion	Inspection of Internal Surfaces in Miscellaneous Piping and Ducting Components	VII.F1-3	3.3.1-72	A
Door Seal	Pressure Boundary	Elastomer	Air - Indoor (External)	Hardening and Loss of Strength/Elastomer Degradation	Periodic Inspection	VII.F1-7	3.3.1-11	E, 1
Door Seal	Pressure Boundary	Elastomer	Air/Gas - Wetted (Internal)	Hardening and Loss of Strength/Elastomer Degradation	Periodic Inspection	VII.F1-7	3.3.1-11	E, 1
Ducting and Components	Pressure Boundary	Galvanized Steel	Air - Indoor (External)	None	None	VII.J-6	3.3.1-92	C
Ducting and Components	Pressure Boundary	Galvanized Steel	Air/Gas - Wetted (Internal)	Loss of Material/General, Pitting and Crevice Corrosion	Inspection of Internal Surfaces in Miscellaneous Piping and Ducting Components	VII.F1-3	3.3.1-72	A
Electric Heaters (Housing)	Pressure Boundary	Stainless Steel	Air - Indoor (External)	None	None	VII.J-15	3.3.1-94	C
Electric Heaters (Housing)	Pressure Boundary	Stainless Steel	Air/Gas - Wetted (Internal)	Loss of Material/Pitting and Crevice Corrosion	Periodic Inspection	VII.F1-1	3.3.1-27	E, 1
Fan Housing	Pressure Boundary	Carbon Steel	Air - Indoor (External)	Loss of Material/General Corrosion	External Surfaces Monitoring	VII.F1-2	3.3.1-56	A

Table 3.3.2-25 Remote Shutdown Panel Room HVAC System (Continued)

Component Type	Intended Function	Material	Environment	Aging Effect Requiring Management	Aging Management Programs	NUREG-1801 Vol. 2 Item	Table 1 Item	Notes
Fan Housing	Pressure Boundary	Carbon Steel	Air/Gas - Wetted (Internal)	Loss of Material/General, Pitting and Crevice Corrosion	Inspection of Internal Surfaces in Miscellaneous Piping and Ducting Components	VII.F1-3	3.3.1-72	A
Filter Housing	Pressure Boundary	Carbon Steel	Air - Indoor (External)	Loss of Material/General Corrosion	External Surfaces Monitoring	VII.F1-2	3.3.1-56	A
Filter Housing	Pressure Boundary	Carbon Steel	Air/Gas - Wetted (Internal)	Loss of Material/General, Pitting and Crevice Corrosion	Inspection of Internal Surfaces in Miscellaneous Piping and Ducting Components	VII.F1-3	3.3.1-72	A
Flexible Connection	Pressure Boundary	Elastomer	Air - Indoor (External)	Hardening and Loss of Strength/Elastomer Degradation	Periodic Inspection	VII.F2-7	3.3.1-11	E, 2
Flexible Connection	Pressure Boundary	Elastomer	Air/Gas - Wetted (Internal)	Hardening and Loss of Strength/Elastomer Degradation	Periodic Inspection	VII.F2-7	3.3.1-11	E, 2
Heat Exchanger Components	Evaluated with the Control Area Chilled Water System	Not Applicable	Not Applicable	Not Applicable	Not Applicable			
Louver	Pressure Boundary	Aluminum	Air - Indoor (External)	None	None	V.F-2	3.2.1-50	C
Louver	Pressure Boundary	Aluminum	Air - Outdoor (External)	Loss of Material/Pitting and Crevice Corrosion	Periodic Inspection	III.B2-7	3.5.1-50	E, 3
Louver	Pressure Boundary	Aluminum	Air/Gas - Wetted (Internal)	Loss of Material/Pitting and Crevice Corrosion	Periodic Inspection	VII.F1-14	3.3.1-27	E, 1
Piping and Fittings	Pressure Boundary	Carbon Steel	Air - Indoor (External)	Loss of Material/General Corrosion	External Surfaces Monitoring	VII.D-3	3.3.1-57	A
Piping and Fittings	Pressure Boundary	Carbon Steel	Air/Gas - Wetted (External)	Loss of Material/General, Pitting, Crevice, and Microbiologically Influenced Corrosion	Inspection of Internal Surfaces in Miscellaneous Piping and Ducting Components	VII.F1-3	3.3.1-72	C
Piping and Fittings	Pressure Boundary	Carbon Steel	Air/Gas - Wetted (Internal)	Loss of Material/General, Pitting and Crevice Corrosion	Inspection of Internal Surfaces in Miscellaneous Piping and Ducting Components	VII.H2-21	3.3.1-71	A

Table 3.3.2-25 Remote Shutdown Panel Room HVAC System (Continued)

Component Type	Intended Function	Material	Environment	Aging Effect Requiring Management	Aging Management Programs	NUREG-1801 Vol. 2 Item	Table 1 Item	Notes
Piping and Fittings	Pressure Boundary	Copper Alloy with less than 15% Zinc	Air - Indoor (External)	None	None	VIII.I-2	3.4.1-41	A
Piping and Fittings	Pressure Boundary	Copper Alloy with less than 15% Zinc	Air/Gas - Wetted (Internal)	Loss of Material/Pitting and Crevice Corrosion	Periodic Inspection	VII.F1-16	3.3.1-25	E, 1
Sensor Element	Pressure Boundary	Aluminum	Air - Indoor (External)	None	None	V.F-2	3.2.1-50	A
Sensor Element	Pressure Boundary	Aluminum	Air/Gas - Wetted (External)	Loss of Material/Pitting and Crevice Corrosion	Periodic Inspection	VII.F1-14	3.3.1-27	E, 1
Valve Body	Pressure Boundary	Copper Alloy with less than 15% Zinc	Air - Indoor (External)	None	None	VIII.I-2	3.4.1-41	A
Valve Body	Pressure Boundary	Copper Alloy with less than 15% Zinc	Air/Gas - Wetted (Internal)	Loss of Material/Pitting and Crevice Corrosion	Periodic Inspection	VII.F1-16	3.3.1-25	E, 1

Notes	Definition of Note
A	Consistent with NUREG-1801 item for component, material, environment, and aging effect. AMP is consistent with NUREG-1801 AMP.
B	Consistent with NUREG-1801 item for component, material, environment, and aging effect. AMP takes some exceptions to NUREG-1801 AMP.
C	Component is different, but consistent with NUREG-1801 item for material, environment, and aging effect. AMP is consistent with NUREG-1801 AMP.
D	Component is different, but consistent with NUREG-1801 item for material, environment, and aging effect. AMP takes some exceptions to NUREG-1801 AMP.
E	Consistent with NUREG-1801 item for material, environment and aging effect, but a different aging management program is credited or NUREG-1801 identifies a plant-specific aging management program.
F	Material not in NUREG-1801 for this component.
G	Environment not in NUREG-1801 for this component and material.
H	Aging effect not in NUREG-1801 for this component, material and environment combination.
I	Aging effect in NUREG-1801 for this component, material and environment combination is not applicable.
J	Neither the component nor the material and environment combination is evaluated in NUREG-1801.

Plant Specific Notes:

1. NUREG-1801 specifies a plant-specfic program. The Periodic Inspection program is used to manage the aging effect(s) applicable to this component type, material, and environment combination.

2. NUREG-1801 specifies a plant-specfic program. The Periodic Inspection program is used to manage the aging effect(s) applicable to this component type, material, and environment combination. Inspections of the flexible connections require physical manipulation; therefore, internal and external inspections, which include physical manipulation of elastomers, will be performed at the same time under the Periodic Inspection program.

3. The Periodic Inspection program is substituted to manage the aging effect(s) applicable to this component type, material, and environment combination.

Table 3.3.2-26
Service Water Intake Ventilation System
Summary of Aging Management Evaluation

Table 3.3.2-26 Service Water Intake Ventilation System

Component Type	Intended Function	Material	Environment	Aging Effect Requiring Management	Aging Management Programs	NUREG-1801 Vol. 2 Item	Table 1 Item	Notes
Bird Screen	Filter	Galvanized Steel	Air - Indoor (External)	None	None	VII.J-6	3.3.1-92	C
Bird Screen	Filter	Galvanized Steel	Air - Outdoor (External)	Loss of Material/General, Pitting and Crevice Corrosion	External Surfaces Monitoring	VII.H1-8	3.3.1-60	C
Bolting	Mechanical Closure	Carbon and Low Alloy Steel Bolting	Air - Indoor (External)	Loss of Material/General Corrosion	External Surfaces Monitoring	VII.F1-4	3.3.1-55	A
Bolting	Mechanical Closure	Galvanized Steel Bolting	Air - Indoor (External)	Loss of Material/General Corrosion	External Surfaces Monitoring	VII.F1-4	3.3.1-55	A
Damper Housing	Pressure Boundary	Carbon Steel	Air - Indoor (External)	Loss of Material/General Corrosion	External Surfaces Monitoring	VII.F1-2	3.3.1-56	A
Damper Housing	Pressure Boundary	Carbon Steel	Air - Outdoor (External)	Loss of Material/General, Pitting and Crevice Corrosion	External Surfaces Monitoring	VII.H1-8	3.3.1-60	C
Damper Housing	Pressure Boundary	Carbon Steel	Air/Gas - Wetted (Internal)	Loss of Material/General, Pitting and Crevice Corrosion	Inspection of Internal Surfaces in Miscellaneous Piping and Ducting Components	VII.F1-3	3.3.1-72	A
Damper Housing	Pressure Boundary	Galvanized Steel	Air - Indoor (External)	None	None	VII.J-6	3.3.1-92	C
Damper Housing	Pressure Boundary	Galvanized Steel	Air/Gas - Wetted (Internal)	Loss of Material/General, Pitting and Crevice Corrosion	Inspection of Internal Surfaces in Miscellaneous Piping and Ducting Components	VII.F1-3	3.3.1-72	A
Ducting and Components	Pressure Boundary	Galvanized Steel	Air - Indoor (External)	None	None	VII.J-6	3.3.1-92	C

Table 3.3.2-26 Service Water Intake Ventilation System (Continued)

Component Type	Intended Function	Material	Environment	Aging Effect Requiring Management	Aging Management Programs	NUREG-1801 Vol. 2 Item	Table 1 Item	Notes
Ducting and Components	Pressure Boundary	Galvanized Steel	Air/Gas - Wetted (Internal)	Loss of Material/General, Pitting and Crevice Corrosion	Inspection of Internal Surfaces in Miscellaneous Piping and Ducting Components	VII.F1-3	3.3.1-72	A
Fan Housing	Pressure Boundary	Carbon Steel	Air - Indoor (External)	Loss of Material/General Corrosion	External Surfaces Monitoring	VII.F1-2	3.3.1-56	A
Fan Housing	Pressure Boundary	Carbon Steel	Air/Gas - Wetted (Internal)	Loss of Material/General, Pitting and Crevice Corrosion	Inspection of Internal Surfaces in Miscellaneous Piping and Ducting Components	VII.F1-3	3.3.1-72	A
Flexible Connection	Pressure Boundary	Elastomer	Air - Indoor (External)	Hardening and Loss of Strength/Elastomer Degradation	Periodic Inspection	VII.F1-7	3.3.1-11	E, 1
Flexible Connection	Pressure Boundary	Elastomer	Air/Gas - Wetted (Internal)	Hardening and Loss of Strength/Elastomer Degradation	Periodic Inspection	VII.F1-7	3.3.1-11	E, 1
Louver	Pressure Boundary	Aluminum	Air - Outdoor (External)	Loss of Material/Pitting and Crevice Corrosion	Periodic Inspection	III.B2-7	3.5.1-50	E, 2
Louver	Pressure Boundary	Aluminum	Air/Gas - Wetted (Internal)	Loss of Material/Pitting and Crevice Corrosion	Periodic Inspection	VII.F1-14	3.3.1-27	E, 3
Piping and Fittings	Pressure Boundary	Stainless Steel	Air - Indoor (External)	None	None	VII.J-15	3.3.1-94	A
Piping and Fittings	Pressure Boundary	Stainless Steel	Air/Gas - Wetted (Internal)	Loss of Material/Pitting and Crevice Corrosion	Periodic Inspection	VII.F1-1	3.3.1-27	E, 3
Sensor Element	Pressure Boundary	Stainless Steel	Air - Indoor (External)	None	None	VII.J-15	3.3.1-94	A
Sensor Element	Pressure Boundary	Stainless Steel	Air/Gas - Wetted (Internal)	Loss of Material/Pitting and Crevice Corrosion	Periodic Inspection	VII.F1-1	3.3.1-27	E, 3
Valve Body	Pressure Boundary	Stainless Steel	Air - Indoor (External)	None	None	VII.J-15	3.3.1-94	A
Valve Body	Pressure Boundary	Stainless Steel	Air/Gas - Wetted (Internal)	Loss of Material/Pitting and Crevice Corrosion	Periodic Inspection	VII.F1-1	3.3.1-27	E, 3

Notes	Definition of Note
A	Consistent with NUREG-1801 item for component, material, environment, and aging effect. AMP is consistent with NUREG-1801 AMP.
B	Consistent with NUREG-1801 item for component, material, environment, and aging effect. AMP takes some exceptions to NUREG-1801 AMP.
C	Component is different, but consistent with NUREG-1801 item for material, environment, and aging effect. AMP is consistent with NUREG-1801 AMP.
D	Component is different, but consistent with NUREG-1801 item for material, environment, and aging effect. AMP takes some exceptions to NUREG-1801 AMP.
E	Consistent with NUREG-1801 item for material, environment and aging effect, but a different aging management program is credited or NUREG-1801 identifies a plant-specific aging management program.
F	Material not in NUREG-1801 for this component.
G	Environment not in NUREG-1801 for this component and material.
H	Aging effect not in NUREG-1801 for this component, material and environment combination.
I	Aging effect in NUREG-1801 for this component, material and environment combination is not applicable.
J	Neither the component nor the material and environment combination is evaluated in NUREG-1801.

Plant Specific Notes:

1. NUREG-1801 specifies a plant-specfic program. The Periodic Inspection program is used to manage the aging effect(s) applicable to this component type, material, and environment combination. Inspections of the flexible connections require physical manipulation; therefore, internal and external inspections, which include physical manipulation of elastomers, will be performed at the same time under the Periodic Inspection program.

2. The Periodic Inspection program is substituted to manage the aging effect(s) applicable to this component type, material, and environment combination.

3. NUREG-1801 specifies a plant-specific program. The Periodic Inspection program is used to manage the aging effect(s) applicable to this component type, material, and environment combination.

Table 3.3.2-27
Service Water System
Summary of Aging Management Evaluation

Table 3.3.2-27 Service Water System

Component Type	Intended Function	Material	Environment	Aging Effect Requiring Management	Aging Management Programs	NUREG-1801 Vol. 2 Item	Table 1 Item	Notes
Bolting	Mechanical Closure	Aluminum Bronze Bolting with 8% Al or more	Air - Indoor (External)	Loss of Preload/Thermal Effects, Gasket Creep, and Self-Loosening	Bolting Integrity			F
Bolting	Mechanical Closure	Aluminum Bronze Bolting with 8% Al or more	Air - Outdoor (External)	Loss of Material/Pitting, Crevice, and Microbiologically Influenced Corrosion	Bolting Integrity			F
Bolting	Mechanical Closure	Aluminum Bronze Bolting with 8% Al or more	Air - Outdoor (External)	Loss of Preload/Thermal Effects, Gasket Creep, and Self-Loosening	Bolting Integrity			F
Bolting	Mechanical Closure	Aluminum Bronze Bolting with 8% Al or more	Raw Water (External)	Loss of Material/Pitting, Crevice, and Microbiologically Influenced Corrosion	Bolting Integrity			F, 1
Bolting	Mechanical Closure	Aluminum Bronze Bolting with 8% Al or more	Raw Water (External)	Loss of Material/Selective Leaching	Selective Leaching of Materials			F, 8
Bolting	Mechanical Closure	Aluminum Bronze Bolting with 8% Al or more	Raw Water (External)	Loss of Preload/Thermal Effects, Gasket Creep, and Self-Loosening	Bolting Integrity			F, 1
Bolting	Mechanical Closure	Carbon and Low Alloy Steel Bolting	Air - Indoor (External)	Loss of Material/General, Pitting and Crevice Corrosion	Bolting Integrity	VII.I-4	3.3.1-43	B
Bolting	Mechanical Closure	Carbon and Low Alloy Steel Bolting	Air - Indoor (External)	Loss of Preload/Thermal Effects, Gasket Creep, and Self-Loosening	Bolting Integrity	VII.I-5	3.3.1-45	B
Bolting	Mechanical Closure	Carbon and Low Alloy Steel Bolting	Air - Outdoor (External)	Loss of Material/General, Pitting and Crevice Corrosion	Bolting Integrity	VII.I-1	3.3.1-43	B

Table 3.3.2-27 Service Water System (Continued)

Component Type	Intended Function	Material	Environment	Aging Effect Requiring Management	Aging Management Programs	NUREG-1801 Vol. 2 Item	Table 1 Item	Notes
Bolting	Mechanical Closure	Carbon and Low Alloy Steel Bolting	Air - Outdoor (External)	Loss of Preload/Thermal Effects, Gasket Creep, and Self-Loosening	Bolting Integrity	IV.C1-10	3.1.1-52	B
Bolting	Mechanical Closure	Carbon and Low Alloy Steel Bolting	Soil (External)	Loss of Material/General, Pitting, Crevice, and Microbiologically Influenced Corrosion	Bolting Integrity			G, 2
Bolting	Mechanical Closure	Carbon and Low Alloy Steel Bolting	Soil (External)	Loss of Preload/Thermal Effects, Gasket Creep, and Self-Loosening	Bolting Integrity			G, 2
Bolting	Mechanical Closure	Nickel Alloy Bolting	Air - Indoor (External)	Loss of Preload/Thermal Effects, Gasket Creep, and Self-Loosening	Bolting Integrity			G
Bolting	Mechanical Closure	Stainless Steel Bolting	Air - Indoor (External)	Loss of Preload/Thermal Effects, Gasket Creep, and Self-Loosening	Bolting Integrity	IV.C2-8	3.1.1-52	B
Diffuser	Direct Flow	Carbon Steel	Air - Outdoor (External)	Loss of Material/General, Pitting and Crevice Corrosion	External Surfaces Monitoring	VII.H1-8	3.3.1-60	A
Diffuser	Direct Flow	Carbon Steel	Raw Water (Internal)	Loss of Material/General, Pitting, Crevice, and Microbiologically Influenced Corrosion, and Fouling	Open-Cycle Cooling Water System	VII.C1-19	3.3.1-76	A, 3
Heat Exchanger Components (RACS)	Leakage Boundary	Carbon Steel (Tube Side Components)	Air - Indoor (External)	Loss of Material/General Corrosion	External Surfaces Monitoring	VII.I-8	3.3.1-58	A
Heat Exchanger Components (RACS)	Leakage Boundary	Carbon or Low Alloy Steel with Nickel Alloy Cladding (Tube Side Components)	Raw Water (Internal)	Loss of Material/Pitting, Crevice, Galvanic, and Microbiologically Influenced Corrosion, and Fouling	Open-Cycle Cooling Water System			H, 4
Heat Exchanger Components (RACS)	Leakage Boundary	Nickel Alloy (Tube Side Components)	Air - Indoor (External)	None	None	VII.J-14	3.3.1-94	C

Table 3.3.2-27 Service Water System (Continued)

Component Type	Intended Function	Material	Environment	Aging Effect Requiring Management	Aging Management Programs	NUREG-1801 Vol. 2 Item	Table 1 Item	Notes
Heat Exchanger Components (RACS)	Leakage Boundary	Nickel Alloy (Tube Side Components)	Raw Water (Internal)	Loss of Material/Pitting, Crevice, and Microbiologically Influenced Corrosion, and Fouling	Open-Cycle Cooling Water System			H, 5
Heat Exchanger Components (SACS)	Heat Transfer	Titanium Alloy (Tubes)	Closed Cycle Cooling Water (External)	Reduction of Heat Transfer/Fouling	Closed-Cycle Cooling Water System			F
Heat Exchanger Components (SACS)	Heat Transfer	Titanium Alloy (Tubes)	Raw Water (Internal)	Reduction of Heat Transfer/Fouling	Open-Cycle Cooling Water System			F
Heat Exchanger Components (SACS)	Pressure Boundary	Carbon Steel (Shell Side Components)	Air - Indoor (External)	Loss of Material/General Corrosion	External Surfaces Monitoring	VII.I-8	3.3.1-58	A
Heat Exchanger Components (SACS)	Pressure Boundary	Carbon Steel (Shell Side Components)	Closed Cycle Cooling Water (External)	Loss of Material/General, Pitting, Crevice and Galvanic Corrosion	Closed-Cycle Cooling Water System	VII.C2-1	3.3.1-48	B
Heat Exchanger Components (SACS)	Pressure Boundary	Carbon Steel (Tube Sheet)	Closed Cycle Cooling Water (Internal)	Loss of Material/General, Pitting, Crevice and Galvanic Corrosion	Closed-Cycle Cooling Water System	VII.C2-1	3.3.1-48	B
Heat Exchanger Components (SACS)	Pressure Boundary	Carbon Steel (Tube Side Components)	Air - Indoor (External)	Loss of Material/General Corrosion	External Surfaces Monitoring	VII.I-8	3.3.1-58	A
Heat Exchanger Components (SACS)	Pressure Boundary	Carbon or Low Alloy Steel with Nickel Alloy Cladding (Tube Sheet)	Raw Water (Internal)	Loss of Material/Pitting, Crevice, Galvanic, and Microbiologically Influenced Corrosion, and Fouling	Open-Cycle Cooling Water System			H, 4
Heat Exchanger Components (SACS)	Pressure Boundary	Carbon or Low Alloy Steel with Nickel Alloy Cladding (Tube Side Components)	Raw Water (Internal)	Loss of Material/Pitting, Crevice, Galvanic, and Microbiologically Influenced Corrosion, and Fouling	Open-Cycle Cooling Water System			H, 4

Table 3.3.2-27 Service Water System (Continued)

Component Type	Intended Function	Material	Environment	Aging Effect Requiring Management	Aging Management Programs	NUREG-1801 Vol. 2 Item	Table 1 Item	Notes
Heat Exchanger Components (SACS)	Pressure Boundary	Nickel Alloy (Tube Side Components)	Air - Indoor (External)	None	None	VII.J-14	3.3.1-94	C
Heat Exchanger Components (SACS)	Pressure Boundary	Nickel Alloy (Tube Side Components)	Raw Water (Internal)	Loss of Material/Pitting, Crevice, and Microbiologically Influenced Corrosion, and Fouling	Open-Cycle Cooling Water System			H, 5
Heat Exchanger Components (SACS)	Pressure Boundary	Titanium Alloy (Tubes)	Closed Cycle Cooling Water (External)	None	None			F, 10
Heat Exchanger Components (SACS)	Pressure Boundary	Titanium Alloy (Tubes)	Raw Water (Internal)	Loss of Material/Fouling	Open-Cycle Cooling Water System			F
Piping and Fittings	Leakage Boundary	Carbon Steel (Concrete lined)	Air - Indoor (External)	Loss of Material/General Corrosion	External Surfaces Monitoring	VII.D-3	3.3.1-57	A
Piping and Fittings	Leakage Boundary	Carbon Steel (Concrete lined)	Raw Water (Internal)	Loss of Material/General, Pitting, Crevice, and Microbiologically Influenced Corrosion, and Fouling	Open-Cycle Cooling Water System	VII.C1-19	3.3.1-76	A, 3
Piping and Fittings	Leakage Boundary	Stainless Steel	Air - Indoor (External)	None	None	VII.J-15	3.3.1-94	A
Piping and Fittings	Leakage Boundary	Stainless Steel	Raw Water (Internal)	Loss of Material/Pitting, Crevice, and Microbiologically Influenced Corrosion, and Fouling	Open-Cycle Cooling Water System	VIII.E-3	3.4.1-33	C
Piping and Fittings	Pressure Boundary	Carbon Steel (Epoxy lined)	Air - Indoor (External)	Loss of Material/General Corrosion	External Surfaces Monitoring	VII.D-3	3.3.1-57	A
Piping and Fittings	Pressure Boundary	Carbon Steel (Epoxy lined)	Air - Outdoor (External)	Loss of Material/General, Pitting and Crevice Corrosion	External Surfaces Monitoring	VII.H1-8	3.3.1-60	A
Piping and Fittings	Pressure Boundary	Carbon Steel (Epoxy lined)	Concrete (Embedded)	None	None	VII.J-21	3.3.1-96	A

Table 3.3.2-27 Service Water System (Continued)

Component Type	Intended Function	Material	Environment	Aging Effect Requiring Management	Aging Management Programs	NUREG-1801 Vol. 2 Item	Table 1 Item	Notes
Piping and Fittings	Pressure Boundary	Carbon Steel (Epoxy lined)	Raw Water (Internal)	Loss of Material/General, Pitting, Crevice, and Microbiologically Influenced Corrosion, and Fouling	Open-Cycle Cooling Water System	VII.C1-19	3.3.1-76	A, 3
Piping and Fittings	Pressure Boundary	Carbon Steel (Epoxy lined)	Soil (External)	Loss of Material/General, Pitting, Crevice, and Microbiologically Influenced Corrosion	Buried Piping Inspection	VII.C1-18	3.3.1-19	A
Piping and Fittings	Pressure Boundary	Carbon Steel (Concrete lined)	Air - Indoor (External)	Loss of Material/General Corrosion	External Surfaces Monitoring	VII.D-3	3.3.1-57	A
Piping and Fittings	Pressure Boundary	Carbon Steel (Concrete lined)	Raw Water (Internal)	Loss of Material/General, Pitting, Crevice, and Microbiologically Influenced Corrosion, and Fouling	Open-Cycle Cooling Water System	VII.C1-19	3.3.1-76	A, 3
Piping and Fittings	Pressure Boundary	Copper Alloy with less than 15% Zinc	Air - Indoor (External)	None	None	V.F-3	3.2.1-53	A
Piping and Fittings	Pressure Boundary	Copper Alloy with less than 15% Zinc	Raw Water (Internal)	Loss of Material/Pitting, Crevice, and Microbiologically Influenced Corrosion, and Fouling	Open-Cycle Cooling Water System	VII.C1-9	3.3.1-81	A
Piping and Fittings	Pressure Boundary	Elastomer	Raw Water (Internal)	Hardening and Loss of Strength/Elastomer Degradation	Open-Cycle Cooling Water System	VII.C1-1	3.3.1-75	A, 6
Piping and Fittings	Pressure Boundary	Reinforced Concrete	Groundwater/Soil (External)	Cracking, Loss of Bond, and Loss of Material (Spalling, Scaling)/Corrosion of Embedded Steel	Buried Non-Steel Piping Inspection	III.A3-4	3.5.1-31	E, 7

Table 3.3.2-27 Service Water System (Continued)

Component Type	Intended Function	Material	Environment	Aging Effect Requiring Management	Aging Management Programs	NUREG-1801 Vol. 2 Item	Table 1 Item	Notes
Piping and Fittings	Pressure Boundary	Reinforced Concrete	Groundwater/Soil (External)	Increase in Porosity and Permeability, Cracking, Loss of Material (Spalling, Scaling)/ Aggressive Chemical Attack	Buried Non-Steel Piping Inspection	III.A6-3	3.5.1-34	E, 7
Piping and Fittings	Pressure Boundary	Reinforced Concrete	Raw Water (Internal)	Cracking, Loss of Bond, and Loss of Material (Spalling, Scaling)/Corrosion of Embedded Steel	Open-Cycle Cooling Water System			J, 7
Piping and Fittings	Pressure Boundary	Reinforced Concrete	Raw Water (Internal)	Increase in Porosity and Permeability, Cracking, Loss of Material (Spalling, Scaling)/ Aggressive Chemical Attack	Open-Cycle Cooling Water System			J, 7
Piping and Fittings	Pressure Boundary	Reinforced Concrete	Raw Water (Internal)	Increase in Porosity and Permeability, Loss of Strength/ Leaching of Calcium Hydroxide	Open-Cycle Cooling Water System	III.A6-6	3.5.1-37	E, 7
Piping and Fittings	Pressure Boundary	Reinforced Concrete	Raw Water (Internal)	Loss of Material/ Abrasion; Cavitation	Open-Cycle Cooling Water System	III.A6-7	3.5.1-45	E, 7
Piping and Fittings	Pressure Boundary	Stainless Steel	Air - Indoor (External)	None	None	VII.J-15	3.3.1-94	A
Piping and Fittings	Pressure Boundary	Stainless Steel	Raw Water (Internal)	Loss of Material/Pitting, Crevice, and Microbiologically Influenced Corrosion, and Fouling	Open-Cycle Cooling Water System	VIII.E-3	3.4.1-33	C
Pump Casing (SW Dewatering)	Leakage Boundary	Ductile Cast Iron	Air - Indoor (External)	Loss of Material/General Corrosion	External Surfaces Monitoring	VII.D-3	3.3.1-57	A
Pump Casing (SW Dewatering)	Leakage Boundary	Ductile Cast Iron	Raw Water (Internal)	Loss of Material/General, Pitting, Crevice, and Microbiologically Influenced Corrosion, and Fouling	Open-Cycle Cooling Water System	VII.C1-19	3.3.1-76	A, 3

Table 3.3.2-27 Service Water System (Continued)

Component Type	Intended Function	Material	Environment	Aging Effect Requiring Management	Aging Management Programs	NUREG-1801 Vol. 2 Item	Table 1 Item	Notes
Pump Casing (SW main pump)	Pressure Boundary	Aluminum Bronze with 8% Al or more	Air - Indoor (External)	None	None	VIII.I-2	3.4.1-41	A
Pump Casing (SW main pump)	Pressure Boundary	Aluminum Bronze with 8% Al or more	Air - Outdoor (External)	Loss of Material/Pitting, Crevice, and Microbiologically Influenced Corrosion	Open-Cycle Cooling Water System			G
Pump Casing (SW main pump)	Pressure Boundary	Aluminum Bronze with 8% Al or more	Raw Water (External)	Loss of Material/Pitting, Crevice, and Microbiologically Influenced Corrosion, and Fouling	Open-Cycle Cooling Water System	VII.C1-9	3.3.1-81	A
Pump Casing (SW main pump)	Pressure Boundary	Aluminum Bronze with 8% Al or more	Raw Water (External)	Loss of Material/Selective Leaching	Selective Leaching of Materials			H, 8
Pump Casing (SW main pump)	Pressure Boundary	Aluminum Bronze with 8% Al or more	Raw Water (Internal)	Loss of Material/Pitting, Crevice, and Microbiologically Influenced Corrosion, and Fouling	Open-Cycle Cooling Water System	VII.C1-9	3.3.1-81	A
Pump Casing (SW main pump)	Pressure Boundary	Aluminum Bronze with 8% Al or more	Raw Water (Internal)	Loss of Material/Selective Leaching	Selective Leaching of Materials			H, 8
Pump Casing (SW main pump)	Pressure Boundary	Stainless Steel	Air - Outdoor (External)	Loss of Material/Pitting and Crevice Corrosion	Open-Cycle Cooling Water System	III.B2-7	3.5.1-50	E, 9
Pump Casing (SW main pump)	Pressure Boundary	Stainless Steel	Raw Water (External)	Loss of Material/Pitting, Crevice, and Microbiologically Influenced Corrosion, and Fouling	Open-Cycle Cooling Water System	VIII.E-3	3.4.1-33	C
Pump Casing (SW main pump)	Pressure Boundary	Stainless Steel	Raw Water (Internal)	Loss of Material/Pitting, Crevice, and Microbiologically Influenced Corrosion, and Fouling	Open-Cycle Cooling Water System	VIII.E-3	3.4.1-33	C

Table 3.3.2-27 Service Water System (Continued)

Component Type	Intended Function	Material	Environment	Aging Effect Requiring Management	Aging Management Programs	NUREG-1801 Vol. 2 Item	Table 1 Item	Notes
Pump Casing (Spray Water Booster)	Pressure Boundary	Stainless Steel	Air - Indoor (External)	None	None	VII.J-15	3.3.1-94	A
Pump Casing (Spray Water Booster)	Pressure Boundary	Stainless Steel	Raw Water (Internal)	Loss of Material/Pitting, Crevice, and Microbiologically Influenced Corrosion, and Fouling	Open-Cycle Cooling Water System	VIII.E-3	3.4.1-33	C
Rupture Disks	Pressure Boundary	Stainless Steel	Air - Outdoor (External)	Loss of Material/Pitting and Crevice Corrosion	Open-Cycle Cooling Water System	III.B2-7	3.5.1-50	E, 9
Rupture Disks	Pressure Boundary	Stainless Steel	Raw Water (Internal)	Loss of Material/Pitting, Crevice, and Microbiologically Influenced Corrosion, and Fouling	Open-Cycle Cooling Water System	VIII.E-3	3.4.1-33	C
Spray Nozzles	Spray	Stainless Steel	Air - Indoor (External)	None	None	VII.J-15	3.3.1-94	A
Spray Nozzles	Spray	Stainless Steel	Raw Water (Internal)	Loss of Material/Pitting, Crevice, and Microbiologically Influenced Corrosion, and Fouling	Open-Cycle Cooling Water System	VIII.E-3	3.4.1-33	C
Strainer Body	Pressure Boundary	Carbon Steel	Air - Indoor (External)	Loss of Material/General Corrosion	External Surfaces Monitoring	VII.D-3	3.3.1-57	A
Strainer Body	Pressure Boundary	Carbon Steel	Raw Water (Internal)	Loss of Material/General, Pitting, Crevice, and Microbiologically Influenced Corrosion, and Fouling	Open-Cycle Cooling Water System	VII.C1-19	3.3.1-76	A, 3
Strainer Body	Pressure Boundary	Carbon or Low Alloy Steel with Nickel Alloy Cladding	Air - Indoor (External)	Loss of Material/General Corrosion	External Surfaces Monitoring	VII.D-3	3.3.1-57	A

Table 3.3.2-27 Service Water System (Continued)

Component Type	Intended Function	Material	Environment	Aging Effect Requiring Management	Aging Management Programs	NUREG-1801 Vol. 2 Item	Table 1 Item	Notes
Strainer Body	Pressure Boundary	Carbon or Low Alloy Steel with Nickel Alloy Cladding	Raw Water (Internal)	Loss of Material/Pitting, Crevice, and Microbiologically Influenced Corrosion, and Fouling	Open-Cycle Cooling Water System			H, 5
Tanks (Drain)	Leakage Boundary	Stainless Steel	Air - Indoor (External)	None	None	VII.J-15	3.3.1-94	C
Tanks (Drain)	Leakage Boundary	Stainless Steel	Raw Water (Internal)	Loss of Material/Pitting, Crevice, and Microbiologically Influenced Corrosion, and Fouling	Open-Cycle Cooling Water System	VIII.E-3	3.4.1-33	C
Thermowell	Pressure Boundary	Stainless Steel	Air - Indoor (External)	None	None	VII.J-15	3.3.1-94	A
Thermowell	Pressure Boundary	Stainless Steel	Raw Water (Internal)	Loss of Material/Pitting, Crevice, and Microbiologically Influenced Corrosion, and Fouling	Open-Cycle Cooling Water System	VIII.E-3	3.4.1-33	C
Traveling Water Screen Support Structure	Evaluated with the Service Water Intake Structures	Not Applicable	Not Applicable	Not Applicable	Not Applicable			
Valve Body	Leakage Boundary	Aluminum Bronze with 8% Al or more	Air - Indoor (External)	None	None	VIII.I-2	3.4.1-41	A
Valve Body	Leakage Boundary	Aluminum Bronze with 8% Al or more	Raw Water (Internal)	Loss of Material/Pitting, Crevice, and Microbiologically Influenced Corrosion, and Fouling	Open-Cycle Cooling Water System	VII.C1-9	3.3.1-81	A
Valve Body	Leakage Boundary	Aluminum Bronze with 8% Al or more	Raw Water (Internal)	Loss of Material/Selective Leaching	Selective Leaching of Materials			H, 8
Valve Body	Leakage Boundary	Carbon Steel	Air - Indoor (External)	Loss of Material/General Corrosion	External Surfaces Monitoring	VII.D-3	3.3.1-57	A

Table 3.3.2-27 Service Water System (Continued)

Component Type	Intended Function	Material	Environment	Aging Effect Requiring Management	Aging Management Programs	NUREG-1801 Vol. 2 Item	Table 1 Item	Notes
Valve Body	Leakage Boundary	Carbon Steel	Raw Water (Internal)	Loss of Material/General, Pitting, Crevice, and Microbiologically Influenced Corrosion, and Fouling	Open-Cycle Cooling Water System	VII.C1-19	3.3.1-76	A, 3
Valve Body	Leakage Boundary	Stainless Steel	Air - Indoor (External)	None	None	VII.J-15	3.3.1-94	A
Valve Body	Leakage Boundary	Stainless Steel	Raw Water (Internal)	Loss of Material/Pitting, Crevice, and Microbiologically Influenced Corrosion, and Fouling	Open-Cycle Cooling Water System	VIII.E-3	3.4.1-33	C
Valve Body	Pressure Boundary	Aluminum Bronze with 8% Al or more	Air - Indoor (External)	None	None	VIII.I-2	3.4.1-41	A
Valve Body	Pressure Boundary	Aluminum Bronze with 8% Al or more	Raw Water (Internal)	Loss of Material/Pitting, Crevice, and Microbiologically Influenced Corrosion, and Fouling	Open-Cycle Cooling Water System	VII.C1-9	3.3.1-81	A
Valve Body	Pressure Boundary	Aluminum Bronze with 8% Al or more	Raw Water (Internal)	Loss of Material/Selective Leaching	Selective Leaching of Materials			H, 8
Valve Body	Pressure Boundary	Carbon Steel	Air - Indoor (External)	Loss of Material/General Corrosion	External Surfaces Monitoring	VII.D-3	3.3.1-57	A
Valve Body	Pressure Boundary	Carbon Steel	Raw Water (Internal)	Loss of Material/General, Pitting, Crevice, and Microbiologically Influenced Corrosion, and Fouling	Open-Cycle Cooling Water System	VII.C1-19	3.3.1-76	A, 3
Valve Body	Pressure Boundary	Stainless Steel	Air - Indoor (External)	None	None	VII.J-15	3.3.1-94	A
Valve Body	Pressure Boundary	Stainless Steel	Raw Water (Internal)	Loss of Material/Pitting, Crevice, and Microbiologically Influenced Corrosion, and Fouling	Open-Cycle Cooling Water System	VIII.E-3	3.4.1-33	C

Notes	Definition of Note
A	Consistent with NUREG-1801 item for component, material, environment, and aging effect. AMP is consistent with NUREG-1801 AMP.
B	Consistent with NUREG-1801 item for component, material, environment, and aging effect. AMP takes some exceptions to NUREG-1801 AMP.
C	Component is different, but consistent with NUREG-1801 item for material, environment, and aging effect. AMP is consistent with NUREG-1801 AMP.
D	Component is different, but consistent with NUREG-1801 item for material, environment, and aging effect. AMP takes some exceptions to NUREG-1801 AMP.
E	Consistent with NUREG-1801 item for material, environment and aging effect, but a different aging management program is credited or NUREG-1801 identifies a plant-specific aging management program.
F	Material not in NUREG-1801 for this component.
G	Environment not in NUREG-1801 for this component and material.
H	Aging effect not in NUREG-1801 for this component, material and environment combination.
I	Aging effect in NUREG-1801 for this component, material and environment combination is not applicable.
J	Neither the component nor the material and environment combination is evaluated in NUREG-1801.

Plant Specific Notes:

1. The aging effects for closure bolting in a raw water environment include loss of material and loss of preload. Inspection activities for bolting in a submerged environment are performed in conjunction with associated component maintenance activities.

2. The aging effects for closure bolting in a soil environment include loss of material and loss of preload. External inspections of buried bolting will occur in accordance with the frequency outlined in the Buried Piping Inspection program.

3. The aging mechanism of lining/coating degradation is not applicable for this component type, material, and environment. If a lining/coating exists it is not being credited.

4. The aging effects/mechanisms for carbon steel with nickel alloy clad in a raw water environment include Loss of Material/Pitting, Crevice, Galvanic, and Microbiologically Influenced Corrosion, and Fouling.

5. The aging effects/mechanisms for nickel alloy in a raw water environment include Loss of Material/Pitting, Crevice, and Microbiologically Influenced Corrosion, and Fouling.

6. Configuration of the pipe joint is such that the outside o-ring is enclosed in a metal channel, therefore there is no external environment.

7. The Open-Cycle Cooling Water System aging management program activities are adequate for managing the aging effects of the internal surfaces of reinforced concrete service water piping. The Buried Non-Steel Piping Inspection aging management program activities are adequate for managing the aging effects of the external surfaces of reinforced concrete service water piping.

8. The aging effects/mechanisms for Aluminum Bronze with 8% Al or more in a raw water environment also includes Loss of Material/Selective Leaching.

9. The Open-Cycle Cooling Water System program is substituted to manage the aging effect(s) applicable to this component type, material, and environment combination.

10.Titanium material located in water environments is not subject to aging effects. Titanium metal is corrosion resistant due to a protective oxide film. Titanium resists all forms of corrosive attack in water enviroments up to 500 degrees Fahrenheit. This is consistent with plant operating experience.

Table 3.3.2-28
Standby Diesel Generator Area Ventilation Systems
Summary of Aging Management Evaluation

Table 3.3.2-28 Standby Diesel Generator Area Ventilation Systems

Component Type	Intended Function	Material	Environment	Aging Effect Requiring Management	Aging Management Programs	NUREG-1801 Vol. 2 Item	Table 1 Item	Notes
Bolting	Mechanical Closure	Carbon and Low Alloy Steel Bolting	Air - Indoor (External)	Loss of Material/General Corrosion	External Surfaces Monitoring	VII.F4-3	3.3.1-55	A
Bolting	Mechanical Closure	Carbon and Low Alloy Steel Bolting	Air - Outdoor (External)	Loss of Material/General, Pitting and Crevice Corrosion	External Surfaces Monitoring	VII.H1-8	3.3.1-60	C
Bolting	Mechanical Closure	Stainless Steel Bolting	Air - Indoor (External)	None	None	III.B2-8	3.5.1-59	A
Bolting	Mechanical Closure	Stainless Steel Bolting	Air - Outdoor (External)	Loss of Material/Pitting and Crevice Corrosion	Periodic Inspection	III.B2-7	3.5.1-50	E, 1
Damper Housing	Pressure Boundary	Galvanized Steel	Air - Indoor (External)	None	None	VII.J-6	3.3.1-92	C
Damper Housing	Pressure Boundary	Galvanized Steel	Air - Outdoor (External)	Loss of Material/General, Pitting and Crevice Corrosion	External Surfaces Monitoring	VII.H1-8	3.3.1-60	C
Damper Housing	Pressure Boundary	Galvanized Steel	Air/Gas - Wetted (Internal)	Loss of Material/General, Pitting and Crevice Corrosion	Inspection of Internal Surfaces in Miscellaneous Piping and Ducting Components	VII.F4-2	3.3.1-72	A
Door Seal	Pressure Boundary	Elastomer	Air - Indoor (External)	Hardening and Loss of Strength/Elastomer Degradation	Periodic Inspection	VII.F4-6	3.3.1-11	E, 2
Door Seal	Pressure Boundary	Elastomer	Air/Gas - Wetted (Internal)	Hardening and Loss of Strength/Elastomer Degradation	Periodic Inspection	VII.F4-6	3.3.1-11	E, 2
Ducting and Components	Pressure Boundary	Galvanized Steel	Air - Indoor (External)	None	None	VII.J-6	3.3.1-92	C

Table 3.3.2-28 Standby Diesel Generator Area Ventilation Systems (Continued)

Component Type	Intended Function	Material	Environment	Aging Effect Requiring Management	Aging Management Programs	NUREG-1801 Vol. 2 Item	Table 1 Item	Notes
Ducting and Components	Pressure Boundary	Galvanized Steel	Air/Gas - Wetted (Internal)	Loss of Material/General, Pitting and Crevice Corrosion	Inspection of Internal Surfaces in Miscellaneous Piping and Ducting Components	VII.F4-2	3.3.1-72	A
Ducting and Components	Pressure Boundary	Stainless Steel	Air - Indoor (External)	None	None	VII.J-15	3.3.1-94	C
Ducting and Components	Pressure Boundary	Stainless Steel	Air/Gas - Wetted (Internal)	Loss of Material/Pitting and Crevice Corrosion	Periodic Inspection	VII.F1-1	3.3.1-27	E, 2
Electric Heaters (Housing)	Pressure Boundary	Stainless Steel	Air - Indoor (External)	None	None	VII.J-15	3.3.1-94	C
Electric Heaters (Housing)	Pressure Boundary	Stainless Steel	Air/Gas - Wetted (Internal)	Loss of Material/Pitting and Crevice Corrosion	Periodic Inspection	VII.F1-1	3.3.1-27	E, 2
Fan Housing	Pressure Boundary	Carbon Steel	Air - Indoor (External)	Loss of Material/General Corrosion	External Surfaces Monitoring	VII.F4-1	3.3.1-56	A
Fan Housing	Pressure Boundary	Carbon Steel	Air/Gas - Wetted (Internal)	Loss of Material/General, Pitting and Crevice Corrosion	Inspection of Internal Surfaces in Miscellaneous Piping and Ducting Components	VII.F4-2	3.3.1-72	A
Filter Housing	Pressure Boundary	Carbon Steel	Air - Indoor (External)	Loss of Material/General Corrosion	External Surfaces Monitoring	VII.F4-1	3.3.1-56	A
Filter Housing	Pressure Boundary	Carbon Steel	Air/Gas - Wetted (Internal)	Loss of Material/General, Pitting and Crevice Corrosion	Inspection of Internal Surfaces in Miscellaneous Piping and Ducting Components	VII.F4-2	3.3.1-72	A
Flexible Connection	Pressure Boundary	Elastomer	Air - Indoor (External)	Hardening and Loss of Strength/Elastomer Degradation	Periodic Inspection	VII.F4-6	3.3.1-11	E, 3
Flexible Connection	Pressure Boundary	Elastomer	Air/Gas - Wetted (Internal)	Hardening and Loss of Strength/Elastomer Degradation	Periodic Inspection	VII.F4-6	3.3.1-11	E, 3
Flow Device	Pressure Boundary	Stainless Steel	Air - Indoor (External)	None	None	VII.J-15	3.3.1-94	A
Flow Device	Pressure Boundary	Stainless Steel	Air/Gas - Wetted (External)	Loss of Material/Pitting and Crevice Corrosion	Periodic Inspection	VII.F1-1	3.3.1-27	E, 2, 4

Table 3.3.2-28 Standby Diesel Generator Area Ventilation Systems (Continued)

Component Type	Intended Function	Material	Environment	Aging Effect Requiring Management	Aging Management Programs	NUREG-1801 Vol. 2 Item	Table 1 Item	Notes
Flow Device	Pressure Boundary	Stainless Steel	Air/Gas - Wetted (Internal)	Loss of Material/Pitting and Crevice Corrosion	Periodic Inspection	VII.F1-1	3.3.1-27	E, 2
Flow Element	Pressure Boundary	Galvanized Steel	Air - Indoor (External)	None	None	VII.J-6	3.3.1-92	A
Flow Element	Pressure Boundary	Galvanized Steel	Air/Gas - Wetted (Internal)	Loss of Material/General, Pitting and Crevice Corrosion	Inspection of Internal Surfaces in Miscellaneous Piping and Ducting Components	VII.F4-2	3.3.1-72	A
Flow Element	Pressure Boundary	Stainless Steel	Air/Gas - Wetted (External)	Loss of Material/Pitting and Crevice Corrosion	Periodic Inspection	VII.F1-1	3.3.1-27	E, 2, 4
Flow Element	Pressure Boundary	Stainless Steel	Air/Gas - Wetted (Internal)	Loss of Material/Pitting and Crevice Corrosion	Periodic Inspection	VII.F1-1	3.3.1-27	E, 2
Heat Exchanger Components (Class 1E Diesel Area Panel Room Supply System)	Evaluated with the Control Area Chilled Water System	Not Applicable	Not Applicable	Not Applicable	Not Applicable			
Heat Exchanger Components (Diesel Generator Room Recirc System)	Evaluated with the Closed Cycle Cooling Water System	Not Applicable	Not Applicable	Not Applicable	Not Applicable			
Louver	Pressure Boundary	Aluminum	Air - Indoor (External)	None	None	V.F-2	3.2.1-50	C
Louver	Pressure Boundary	Aluminum	Air/Gas - Wetted (Internal)	Loss of Material/Pitting and Crevice Corrosion	Periodic Inspection	VII.F4-10	3.3.1-27	E, 2
Louver	Pressure Boundary	Galvanized Steel	Air - Indoor (External)	None	None	VII.J-6	3.3.1-92	C
Louver	Pressure Boundary	Galvanized Steel	Air/Gas - Wetted (Internal)	Loss of Material/General, Pitting and Crevice Corrosion	Inspection of Internal Surfaces in Miscellaneous Piping and Ducting Components	VII.F4-2	3.3.1-72	A
Piping and Fittings	Pressure Boundary	Copper Alloy with 15% Zinc or More	Air - Indoor (External)	None	None	VIII.I-2	3.4.1-41	A
Piping and Fittings	Pressure Boundary	Copper Alloy with 15% Zinc or More	Air/Gas - Wetted (External)	Loss of Material/Pitting and Crevice Corrosion	Periodic Inspection	VII.F4-12	3.3.1-25	E, 2, 4

Table 3.3.2-28 Standby Diesel Generator Area Ventilation Systems (Continued)

Component Type	Intended Function	Material	Environment	Aging Effect Requiring Management	Aging Management Programs	NUREG-1801 Vol. 2 Item	Table 1 Item	Notes
Piping and Fittings	Pressure Boundary	Copper Alloy with 15% Zinc or More	Air/Gas - Wetted (Internal)	Loss of Material/Pitting and Crevice Corrosion	Periodic Inspection	VII.F4-12	3.3.1-25	E, 2
Piping and Fittings	Pressure Boundary	Stainless Steel	Air - Indoor (External)	None	None	VII.J-15	3.3.1-94	A
Piping and Fittings	Pressure Boundary	Stainless Steel	Air/Gas - Wetted (External)	Loss of Material/Pitting and Crevice Corrosion	Periodic Inspection	VII.F1-1	3.3.1-27	E, 2, 4
Piping and Fittings	Pressure Boundary	Stainless Steel	Air/Gas - Wetted (Internal)	Loss of Material/Pitting and Crevice Corrosion	Periodic Inspection	VII.F1-1	3.3.1-27	E, 2
Thermowell	Pressure Boundary	Stainless Steel	Air - Indoor (External)	None	None	VII.J-15	3.3.1-94	A
Thermowell	Pressure Boundary	Stainless Steel	Air/Gas - Wetted (Internal)	Loss of Material/Pitting and Crevice Corrosion	Periodic Inspection	VII.F1-1	3.3.1-27	E, 2
Valve Body	Pressure Boundary	Stainless Steel	Air - Indoor (External)	None	None	VII.J-15	3.3.1-94	A
Valve Body	Pressure Boundary	Stainless Steel	Air/Gas - Wetted (Internal)	Loss of Material/Pitting and Crevice Corrosion	Periodic Inspection	VII.F1-1	3.3.1-27	E, 2

Notes	Definition of Note
A	Consistent with NUREG-1801 item for component, material, environment, and aging effect. AMP is consistent with NUREG-1801 AMP.
B	Consistent with NUREG-1801 item for component, material, environment, and aging effect. AMP takes some exceptions to NUREG-1801 AMP.
C	Component is different, but consistent with NUREG-1801 item for material, environment, and aging effect. AMP is consistent with NUREG-1801 AMP.
D	Component is different, but consistent with NUREG-1801 item for material, environment, and aging effect. AMP takes some exceptions to NUREG-1801 AMP.
E	Consistent with NUREG-1801 item for material, environment and aging effect, but a different aging management program is credited or NUREG-1801 identifies a plant-specific aging management program.
F	Material not in NUREG-1801 for this component.
G	Environment not in NUREG-1801 for this component and material.
H	Aging effect not in NUREG-1801 for this component, material and environment combination.
I	Aging effect in NUREG-1801 for this component, material and environment combination is not applicable.
J	Neither the component nor the material and environment combination is evaluated in NUREG-1801.

Plant Specific Notes:

1. The Periodic Inspection program is substituted to manage the aging effect(s) applicable to this component type, material, and environment combination.

2. NUREG-1801 specifies a plant-specfic program. The Periodic Inspection program is used to manage the aging effect(s) applicable to this component type, material, and environment combination.

3. NUREG-1801 specifies a plant-specfic program. The Periodic Inspection program is used to manage the aging effect(s) applicable to this component type, material, and environment combination. Inspections of the flexible connections require physical manipulation; therefore, internal and external inspections, which include physical manipulation of elastomers, will be performed at the same time under the Periodic Inspection program.

4. The environment of Air/Gas - Wetted is applicable to the external surfaces during normal operation. This component is located within the HVAC ductwork and the external surfaces of this component are exposed to the HVAC Air/Gas - Wetted environment.

Table 3.3.2-29
Standby Diesel Generators and Auxiliary Systems
Summary of Aging Management Evaluation

Table 3.3.2-29 Standby Diesel Generators and Auxiliary Systems

Component Type	Intended Function	Material	Environment	Aging Effect Requiring Management	Aging Management Programs	NUREG-1801 Vol. 2 Item	Table 1 Item	Notes
Bolting	Mechanical Closure	Carbon and Low Alloy Steel Bolting	Air - Indoor (External)	Loss of Material/General, Pitting and Crevice Corrosion	Bolting Integrity	VII.I-4	3.3.1-43	B
Bolting	Mechanical Closure	Carbon and Low Alloy Steel Bolting	Air - Indoor (External)	Loss of Preload/Thermal Effects, Gasket Creep, and Self-Loosening	Bolting Integrity	VII.I-5	3.3.1-45	B
Bolting	Mechanical Closure	Copper Alloy Bolting with 15% Zinc or More	Air - Indoor (External)	Loss of Preload/Thermal Effects, Gasket Creep, and Self-Loosening	Bolting Integrity			F
Bolting	Mechanical Closure	Stainless Steel Bolting	Air - Indoor (External)	Loss of Preload/Thermal Effects, Gasket Creep, and Self-Loosening	Bolting Integrity	IV.C2-8	3.1.1-52	B
Electric Heaters (Jacket Water)	Pressure Boundary	Carbon Steel	Air - Indoor (External)	Loss of Material/General Corrosion	External Surfaces Monitoring	VII.I-8	3.3.1-58	A
Electric Heaters (Jacket Water)	Pressure Boundary	Carbon Steel	Closed Cycle Cooling Water (Internal)	Loss of Material/General, Pitting and Crevice Corrosion	Closed-Cycle Cooling Water System	VII.H2-23	3.3.1-47	B
Electric Heaters (Lube Oil)	Pressure Boundary	Carbon Steel	Air - Indoor (External)	Loss of Material/General Corrosion	External Surfaces Monitoring	VII.I-8	3.3.1-58	A
Electric Heaters (Lube Oil)	Pressure Boundary	Carbon Steel	Lubricating Oil (Internal)	Loss of Material/General, Pitting and Crevice Corrosion	Lubricating Oil Analysis	VII.H2-20	3.3.1-14	B
Electric Heaters (Lube Oil)	Pressure Boundary	Carbon Steel	Lubricating Oil (Internal)	Loss of Material/General, Pitting and Crevice Corrosion	One-Time Inspection	VII.H2-20	3.3.1-14	A
Expansion Joints	Pressure Boundary	Stainless Steel	Air - Indoor (External)	None	None	VII.J-15	3.3.1-94	A
Expansion Joints	Pressure Boundary	Stainless Steel	Diesel Exhaust (Internal)	Cracking/Stress Corrosion Cracking	Periodic Inspection	VII.H2-1	3.3.1-6	E, 1

Table 3.3.2-29 Standby Diesel Generators and Auxiliary Systems (Continued)

Component Type	Intended Function	Material	Environment	Aging Effect Requiring Management	Aging Management Programs	NUREG-1801 Vol. 2 Item	Table 1 Item	Notes
Expansion Joints	Pressure Boundary	Stainless Steel	Diesel Exhaust (Internal)	Loss of Material/Pitting and Crevice Corrosion	Periodic Inspection	VII.H2-2	3.3.1-18	E, 1
Filter Housing (Combustion Intake)	Pressure Boundary	Carbon Steel	Air - Indoor (External)	Loss of Material/General Corrosion	External Surfaces Monitoring	VII.I-8	3.3.1-58	A
Filter Housing (Combustion Intake)	Pressure Boundary	Carbon Steel	Air/Gas - Wetted (Internal)	Loss of Material/General, Pitting and Crevice Corrosion	Inspection of Internal Surfaces in Miscellaneous Piping and Ducting Components	VII.H2-21	3.3.1-71	C
Filter Housing (Fuel Oil)	Leakage Boundary	Carbon Steel	Air - Indoor (External)	Loss of Material/General Corrosion	External Surfaces Monitoring	VII.D-3	3.3.1-57	A
Filter Housing (Fuel Oil)	Leakage Boundary	Carbon Steel	Fuel Oil (Internal)	Loss of Material/General, Pitting, Crevice, and Microbiologically Influenced Corrosion, and Fouling	Fuel Oil Chemistry	VII.H1-10	3.3.1-20	B
Filter Housing (Fuel Oil)	Leakage Boundary	Carbon Steel	Fuel Oil (Internal)	Loss of Material/General, Pitting, Crevice, and Microbiologically Influenced Corrosion, and Fouling	One-Time Inspection	VII.H1-10	3.3.1-20	A
Filter Housing (Fuel Oil)	Pressure Boundary	Carbon Steel	Air - Indoor (External)	Loss of Material/General Corrosion	External Surfaces Monitoring	VII.D-3	3.3.1-57	A
Filter Housing (Fuel Oil)	Pressure Boundary	Carbon Steel	Fuel Oil (Internal)	Loss of Material/General, Pitting, Crevice, and Microbiologically Influenced Corrosion, and Fouling	Fuel Oil Chemistry	VII.H1-10	3.3.1-20	B
Filter Housing (Fuel Oil)	Pressure Boundary	Carbon Steel	Fuel Oil (Internal)	Loss of Material/General, Pitting, Crevice, and Microbiologically Influenced Corrosion, and Fouling	One-Time Inspection	VII.H1-10	3.3.1-20	A
Filter Housing (Lube Oil)	Pressure Boundary	Carbon Steel	Air - Indoor (External)	Loss of Material/General Corrosion	External Surfaces Monitoring	VII.D-3	3.3.1-57	A

Table 3.3.2-29 Standby Diesel Generators and Auxiliary Systems (Continued)

Component Type	Intended Function	Material	Environment	Aging Effect Requiring Management	Aging Management Programs	NUREG-1801 Vol. 2 Item	Table 1 Item	Notes
Filter Housing (Lube Oil)	Pressure Boundary	Carbon Steel	Lubricating Oil (Internal)	Loss of Material/General, Pitting and Crevice Corrosion	Lubricating Oil Analysis	VII.H2-20	3.3.1-14	B
Filter Housing (Lube Oil)	Pressure Boundary	Carbon Steel	Lubricating Oil (Internal)	Loss of Material/General, Pitting and Crevice Corrosion	One-Time Inspection	VII.H2-20	3.3.1-14	A
Filter Housing (Start Air)	Pressure Boundary	Stainless Steel	Air - Indoor (External)	None	None	VII.J-15	3.3.1-94	A
Filter Housing (Start Air)	Pressure Boundary	Stainless Steel	Air/Gas - Dry (Internal)	None	None	VII.J-18	3.3.1-98	A
Flame Arrestor (Conservation Vent)	Pressure Boundary	Aluminum	Air - Outdoor (External)	Loss of Material/Pitting and Crevice Corrosion	Periodic Inspection	III.B2-7	3.5.1-50	E, 2
Flame Arrestor (Conservation Vent)	Pressure Boundary	Aluminum	Air/Gas - Wetted (Internal)	Loss of Material/Pitting and Crevice Corrosion	Periodic Inspection	VII.F4-10	3.3.1-27	E, 1
Flame Arrestor (Conservation Vent)	Pressure Boundary	Stainless Steel	Air - Outdoor (External)	Loss of Material/Pitting and Crevice Corrosion	Periodic Inspection	III.B4-7	3.5.1-50	E, 2
Flow Element	Pressure Boundary	Stainless Steel	Air - Indoor (External)	None	None	VII.J-15	3.3.1-94	A
Flow Element	Pressure Boundary	Stainless Steel	Fuel Oil (Internal)	Loss of Material/Pitting, Crevice, and Microbiologically Influenced Corrosion	Fuel Oil Chemistry	VII.H1-6	3.3.1-32	B
Flow Element	Pressure Boundary	Stainless Steel	Fuel Oil (Internal)	Loss of Material/Pitting, Crevice, and Microbiologically Influenced Corrosion	One-Time Inspection	VII.H1-6	3.3.1-32	A
Heat Exchanger Components (Intercooler)	Evaluated with the Closed Cycle Cooling Water System	Not Applicable	Not Applicable	Not Applicable	Not Applicable			

Table 3.3.2-29 Standby Diesel Generators and Auxiliary Systems (Continued)

Component Type	Intended Function	Material	Environment	Aging Effect Requiring Management	Aging Management Programs	NUREG-1801 Vol. 2 Item	Table 1 Item	Notes
Heat Exchanger Components (Jacket Water)	Evaluated with the Closed Cycle Cooling Water System	Not Applicable	Not Applicable	Not Applicable	Not Applicable			
Heat Exchanger Components (Lube Oil)	Evaluated with the Closed Cycle Cooling Water System	Not Applicable	Not Applicable	Not Applicable	Not Applicable			
Hoses	Pressure Boundary	Stainless Steel	Air - Indoor (External)	None	None	VII.J-15	3.3.1-94	A
Hoses	Pressure Boundary	Stainless Steel	Closed Cycle Cooling Water (Internal) > 140 F	Cracking/Stress Corrosion Cracking	Closed-Cycle Cooling Water System	VII.E4-11	3.3.1-46	B
Hoses	Pressure Boundary	Stainless Steel	Closed Cycle Cooling Water (Internal) > 140 F	Loss of Material/Pitting and Crevice Corrosion	Closed-Cycle Cooling Water System	VII.C2-10	3.3.1-50	B
Hoses	Pressure Boundary	Stainless Steel	Fuel Oil (Internal)	Loss of Material/Pitting, Crevice, and Microbiologically Influenced Corrosion	Fuel Oil Chemistry	VII.H1-6	3.3.1-32	B
Hoses	Pressure Boundary	Stainless Steel	Fuel Oil (Internal)	Loss of Material/Pitting, Crevice, and Microbiologically Influenced Corrosion	One-Time Inspection	VII.H1-6	3.3.1-32	A
Hoses	Pressure Boundary	Stainless Steel	Lubricating Oil (Internal)	Loss of Material/Pitting and Crevice Corrosion	Lubricating Oil Analysis	VII.H2-17	3.3.1-33	B, 3
Hoses	Pressure Boundary	Stainless Steel	Lubricating Oil (Internal)	Loss of Material/Pitting and Crevice Corrosion	One-Time Inspection	VII.H2-17	3.3.1-33	A, 3
Piping and Fittings	Leakage Boundary	Carbon Steel	Air - Indoor (External)	Loss of Material/General Corrosion	External Surfaces Monitoring	VII.D-3	3.3.1-57	A
Piping and Fittings	Leakage Boundary	Carbon Steel	Fuel Oil (Internal)	Loss of Material/General, Pitting, Crevice, and Microbiologically Influenced Corrosion, and Fouling	Fuel Oil Chemistry	VII.H1-10	3.3.1-20	B

Table 3.3.2-29 Standby Diesel Generators and Auxiliary Systems (Continued)

Component Type	Intended Function	Material	Environment	Aging Effect Requiring Management	Aging Management Programs	NUREG-1801 Vol. 2 Item	Table 1 Item	Notes
Piping and Fittings	Leakage Boundary	Carbon Steel	Fuel Oil (Internal)	Loss of Material/General, Pitting, Crevice, and Microbiologically Influenced Corrosion, and Fouling	One-Time Inspection	VII.H1-10	3.3.1-20	A
Piping and Fittings	Leakage Boundary	Carbon Steel	Lubricating Oil (Internal)	Loss of Material/General, Pitting and Crevice Corrosion	Lubricating Oil Analysis	VII.H2-20	3.3.1-14	B
Piping and Fittings	Leakage Boundary	Carbon Steel	Lubricating Oil (Internal)	Loss of Material/General, Pitting and Crevice Corrosion	One-Time Inspection	VII.H2-20	3.3.1-14	A
Piping and Fittings	Leakage Boundary	Carbon Steel	Treated Water (Internal)	Loss of Material/Galvanic Corrosion	One-Time Inspection	VIII.E-7	3.4.1-5	C
Piping and Fittings	Leakage Boundary	Carbon Steel	Treated Water (Internal)	Loss of Material/Galvanic Corrosion	Water Chemistry	VIII.E-7	3.4.1-5	D
Piping and Fittings	Leakage Boundary	Carbon Steel	Treated Water (Internal)	Loss of Material/General, Pitting and Crevice Corrosion	One-Time Inspection	VII.E3-18	3.3.1-17	A
Piping and Fittings	Leakage Boundary	Carbon Steel	Treated Water (Internal)	Loss of Material/General, Pitting and Crevice Corrosion	Water Chemistry	VII.E3-18	3.3.1-17	B
Piping and Fittings	Leakage Boundary	Stainless Steel	Treated Water (Internal)	Loss of Material/Pitting and Crevice Corrosion	One-Time Inspection	VII.E3-15	3.3.1-24	A
Piping and Fittings	Leakage Boundary	Stainless Steel	Treated Water (Internal)	Loss of Material/Pitting and Crevice Corrosion	Water Chemistry	VII.E3-15	3.3.1-24	B
Piping and Fittings	Pressure Boundary	Carbon Steel	Air - Indoor (External)	Loss of Material/General Corrosion	External Surfaces Monitoring	VII.D-3	3.3.1-57	A
Piping and Fittings	Pressure Boundary	Carbon Steel	Air - Outdoor (External)	Loss of Material/General, Pitting and Crevice Corrosion	External Surfaces Monitoring	VII.H1-8	3.3.1-60	A
Piping and Fittings	Pressure Boundary	Carbon Steel	Air/Gas - Wetted (Internal)	Loss of Material/General, Pitting and Crevice Corrosion	Inspection of Internal Surfaces in Miscellaneous Piping and Ducting Components	VII.H2-21	3.3.1-71	A

Table 3.3.2-29 Standby Diesel Generators and Auxiliary Systems (Continued)

Component Type	Intended Function	Material	Environment	Aging Effect Requiring Management	Aging Management Programs	NUREG-1801 Vol. 2 Item	Table 1 Item	Notes
Piping and Fittings	Pressure Boundary	Carbon Steel	Closed Cycle Cooling Water (Internal)	Loss of Material/General, Pitting and Crevice Corrosion	Closed-Cycle Cooling Water System	VII.H2-23	3.3.1-47	B
Piping and Fittings	Pressure Boundary	Carbon Steel	Diesel Exhaust (Internal)	Loss of Material/General, Pitting and Crevice Corrosion	Inspection of Internal Surfaces in Miscellaneous Piping and Ducting Components	VII.H2-2	3.3.1-18	E, 4
Piping and Fittings	Pressure Boundary	Carbon Steel	Fuel Oil (Internal)	Loss of Material/General, Pitting, Crevice, and Microbiologically Influenced Corrosion, and Fouling	Fuel Oil Chemistry	VII.H1-10	3.3.1-20	B
Piping and Fittings	Pressure Boundary	Carbon Steel	Fuel Oil (Internal)	Loss of Material/General, Pitting, Crevice, and Microbiologically Influenced Corrosion, and Fouling	One-Time Inspection	VII.H1-10	3.3.1-20	A
Piping and Fittings	Pressure Boundary	Carbon Steel	Lubricating Oil (Internal)	Loss of Material/General, Pitting and Crevice Corrosion	Lubricating Oil Analysis	VII.H2-20	3.3.1-14	B
Piping and Fittings	Pressure Boundary	Carbon Steel	Lubricating Oil (Internal)	Loss of Material/General, Pitting and Crevice Corrosion	One-Time Inspection	VII.H2-20	3.3.1-14	A
Piping and Fittings	Pressure Boundary	Carbon Steel	Treated Water (Internal)	Loss of Material/Galvanic Corrosion	One-Time Inspection	VIII.E-7	3.4.1-5	C
Piping and Fittings	Pressure Boundary	Carbon Steel	Treated Water (Internal)	Loss of Material/Galvanic Corrosion	Water Chemistry	VIII.E-7	3.4.1-5	D
Piping and Fittings	Pressure Boundary	Carbon Steel	Treated Water (Internal)	Loss of Material/General, Pitting and Crevice Corrosion	One-Time Inspection	VII.E3-18	3.3.1-17	A
Piping and Fittings	Pressure Boundary	Carbon Steel	Treated Water (Internal)	Loss of Material/General, Pitting and Crevice Corrosion	Water Chemistry	VII.E3-18	3.3.1-17	B
Piping and Fittings	Pressure Boundary	Stainless Steel	Air - Indoor (External)	None	None	VII.J-15	3.3.1-94	A
Piping and Fittings	Pressure Boundary	Stainless Steel	Air/Gas - Dry (Internal)	None	None	VII.J-18	3.3.1-98	A

Table 3.3.2-29 Standby Diesel Generators and Auxiliary Systems (Continued)

Component Type	Intended Function	Material	Environment	Aging Effect Requiring Management	Aging Management Programs	NUREG-1801 Vol. 2 Item	Table 1 Item	Notes
Piping and Fittings	Pressure Boundary	Stainless Steel	Closed Cycle Cooling Water (Internal) > 140 F	Cracking/Stress Corrosion Cracking	Closed-Cycle Cooling Water System	VII.E4-11	3.3.1-46	B
Piping and Fittings	Pressure Boundary	Stainless Steel	Closed Cycle Cooling Water (Internal) > 140 F	Loss of Material/Pitting and Crevice Corrosion	Closed-Cycle Cooling Water System	VII.C2-10	3.3.1-50	B
Piping and Fittings	Pressure Boundary	Stainless Steel	Fuel Oil (Internal)	Loss of Material/Pitting, Crevice, and Microbiologically Influenced Corrosion	Fuel Oil Chemistry	VII.H1-6	3.3.1-32	B
Piping and Fittings	Pressure Boundary	Stainless Steel	Fuel Oil (Internal)	Loss of Material/Pitting, Crevice, and Microbiologically Influenced Corrosion	One-Time Inspection	VII.H1-6	3.3.1-32	A
Piping and Fittings	Pressure Boundary	Stainless Steel	Lubricating Oil (Internal)	Loss of Material/Pitting and Crevice Corrosion	Lubricating Oil Analysis	VII.H2-17	3.3.1-33	B, 3
Piping and Fittings	Pressure Boundary	Stainless Steel	Lubricating Oil (Internal)	Loss of Material/Pitting and Crevice Corrosion	One-Time Inspection	VII.H2-17	3.3.1-33	A, 3
Piping and Fittings	Pressure Boundary	Stainless Steel	Treated Water (Internal)	Loss of Material/Pitting and Crevice Corrosion	One-Time Inspection	VII.E3-15	3.3.1-24	A
Piping and Fittings	Pressure Boundary	Stainless Steel	Treated Water (Internal)	Loss of Material/Pitting and Crevice Corrosion	Water Chemistry	VII.E3-15	3.3.1-24	B
Piping and Fittings	Structural Support	Stainless Steel	Air - Indoor (External)	None	None	VII.J-15	3.3.1-94	A
Piping and Fittings	Structural Support	Stainless Steel	Air/Gas - Dry (Internal)	None	None	VII.J-18	3.3.1-98	A
Pump Casing (Fuel Oil - Motor)	Pressure Boundary	Carbon Steel	Air - Indoor (External)	Loss of Material/General Corrosion	External Surfaces Monitoring	VII.D-3	3.3.1-57	A
Pump Casing (Fuel Oil - Motor)	Pressure Boundary	Carbon Steel	Fuel Oil (Internal)	Loss of Material/General, Pitting, Crevice, and Microbiologically Influenced Corrosion, and Fouling	Fuel Oil Chemistry	VII.H1-10	3.3.1-20	B
Pump Casing (Fuel Oil - Motor)	Pressure Boundary	Carbon Steel	Fuel Oil (Internal)	Loss of Material/General, Pitting, Crevice, and Microbiologically Influenced Corrosion, and Fouling	One-Time Inspection	VII.H1-10	3.3.1-20	A

Table 3.3.2-29 Standby Diesel Generators and Auxiliary Systems (Continued)

Component Type	Intended Function	Material	Environment	Aging Effect Requiring Management	Aging Management Programs	NUREG-1801 Vol. 2 Item	Table 1 Item	Notes
Pump Casing (Fuel Oil - Storage Transfer)	Pressure Boundary	Stainless Steel	Air - Indoor (External)	None	None	VII.J-15	3.3.1-94	A
Pump Casing (Fuel Oil - Storage Transfer)	Pressure Boundary	Stainless Steel	Fuel Oil (Internal)	Loss of Material/Pitting, Crevice, and Microbiologically Influenced Corrosion	Fuel Oil Chemistry	VII.H1-6	3.3.1-32	B
Pump Casing (Fuel Oil - Storage Transfer)	Pressure Boundary	Stainless Steel	Fuel Oil (Internal)	Loss of Material/Pitting, Crevice, and Microbiologically Influenced Corrosion	One-Time Inspection	VII.H1-6	3.3.1-32	A
Pump Casing (Lube Oil - Keepwarm)	Pressure Boundary	Carbon Steel	Air - Indoor (External)	Loss of Material/General Corrosion	External Surfaces Monitoring	VII.D-3	3.3.1-57	A
Pump Casing (Lube Oil - Keepwarm)	Pressure Boundary	Carbon Steel	Lubricating Oil (Internal)	Loss of Material/General, Pitting and Crevice Corrosion	Lubricating Oil Analysis	VII.H2-20	3.3.1-14	B
Pump Casing (Lube Oil - Keepwarm)	Pressure Boundary	Carbon Steel	Lubricating Oil (Internal)	Loss of Material/General, Pitting and Crevice Corrosion	One-Time Inspection	VII.H2-20	3.3.1-14	A
Pump Casing (Rocker Lube Oil - Motor)	Pressure Boundary	Carbon Steel	Air - Indoor (External)	Loss of Material/General Corrosion	External Surfaces Monitoring	VII.D-3	3.3.1-57	A
Pump Casing (Rocker Lube Oil - Motor)	Pressure Boundary	Carbon Steel	Lubricating Oil (Internal)	Loss of Material/General, Pitting and Crevice Corrosion	Lubricating Oil Analysis	VII.H2-20	3.3.1-14	B
Pump Casing (Rocker Lube Oil - Motor)	Pressure Boundary	Carbon Steel	Lubricating Oil (Internal)	Loss of Material/General, Pitting and Crevice Corrosion	One-Time Inspection	VII.H2-20	3.3.1-14	A
Pump Casing (Water Jacket - Keepwarm Motor)	Pressure Boundary	Stainless Steel	Air - Indoor (External)	None	None	VII.J-15	3.3.1-94	A
Pump Casing (Water Jacket - Keepwarm Motor)	Pressure Boundary	Stainless Steel	Closed Cycle Cooling Water (Internal) > 140 F	Cracking/Stress Corrosion Cracking	Closed-Cycle Cooling Water System	VII.E4-11	3.3.1-46	B

Table 3.3.2-29 Standby Diesel Generators and Auxiliary Systems (Continued)

Component Type	Intended Function	Material	Environment	Aging Effect Requiring Management	Aging Management Programs	NUREG-1801 Vol. 2 Item	Table 1 Item	Notes
Pump Casing (Water Jacket - Keepwarm Motor)	Pressure Boundary	Stainless Steel	Closed Cycle Cooling Water (Internal) > 140 F	Loss of Material/Pitting and Crevice Corrosion	Closed-Cycle Cooling Water System	VII.C2-10	3.3.1-50	B
Silencer/ Muffler	Pressure Boundary	Carbon Steel	Air - Indoor (External)	Loss of Material/General Corrosion	External Surfaces Monitoring	VII.D-3	3.3.1-57	A
Silencer/ Muffler	Pressure Boundary	Carbon Steel	Diesel Exhaust (Internal)	Loss of Material/General, Pitting and Crevice Corrosion	Inspection of Internal Surfaces in Miscellaneous Piping and Ducting Components	VII.H2-2	3.3.1-18	E, 4
Strainer Body	Leakage Boundary	Carbon Steel	Air - Indoor (External)	Loss of Material/General Corrosion	External Surfaces Monitoring	VII.D-3	3.3.1-57	A
Strainer Body	Leakage Boundary	Carbon Steel	Lubricating Oil (Internal)	Loss of Material/General, Pitting and Crevice Corrosion	Lubricating Oil Analysis	VII.H2-20	3.3.1-14	B
Strainer Body	Leakage Boundary	Carbon Steel	Lubricating Oil (Internal)	Loss of Material/General, Pitting and Crevice Corrosion	One-Time Inspection	VII.H2-20	3.3.1-14	A
Strainer Body	Pressure Boundary	Carbon Steel	Air - Indoor (External)	Loss of Material/General Corrosion	External Surfaces Monitoring	VII.D-3	3.3.1-57	A
Strainer Body	Pressure Boundary	Carbon Steel	Lubricating Oil (Internal)	Loss of Material/General, Pitting and Crevice Corrosion	Lubricating Oil Analysis	VII.H2-20	3.3.1-14	B
Strainer Body	Pressure Boundary	Carbon Steel	Lubricating Oil (Internal)	Loss of Material/General, Pitting and Crevice Corrosion	One-Time Inspection	VII.H2-20	3.3.1-14	A
Tanks (Air Receiver)	Pressure Boundary	Stainless Steel	Air - Indoor (External)	None	None	VII.J-15	3.3.1-94	C
Tanks (Air Receiver)	Pressure Boundary	Stainless Steel	Air/Gas - Dry (Internal)	None	None	VII.J-18	3.3.1-98	C
Tanks (Fuel Oil Day)	Pressure Boundary	Carbon Steel	Air - Indoor (External)	Loss of Material/General Corrosion	External Surfaces Monitoring	VII.I-8	3.3.1-58	A

Table 3.3.2-29 Standby Diesel Generators and Auxiliary Systems (Continued)

Component Type	Intended Function	Material	Environment	Aging Effect Requiring Management	Aging Management Programs	NUREG-1801 Vol. 2 Item	Table 1 Item	Notes
Tanks (Fuel Oil Day)	Pressure Boundary	Carbon Steel	Fuel Oil (Internal)	Loss of Material/General, Pitting, Crevice, and Microbiologically Influenced Corrosion, and Fouling	Fuel Oil Chemistry	VII.H1-10	3.3.1-20	B
Tanks (Fuel Oil Day)	Pressure Boundary	Carbon Steel	Fuel Oil (Internal)	Loss of Material/General, Pitting, Crevice, and Microbiologically Influenced Corrosion, and Fouling	One-Time Inspection	VII.H1-10	3.3.1-20	A
Tanks (Fuel Oil Storage)	Pressure Boundary	Carbon Steel	Air - Indoor (External)	Loss of Material/General Corrosion	External Surfaces Monitoring	VII.I-8	3.3.1-58	A
Tanks (Fuel Oil Storage)	Pressure Boundary	Carbon Steel	Fuel Oil (Internal)	Loss of Material/General, Pitting, Crevice, and Microbiologically Influenced Corrosion, and Fouling	Fuel Oil Chemistry	VII.H1-10	3.3.1-20	B
Tanks (Fuel Oil Storage)	Pressure Boundary	Carbon Steel	Fuel Oil (Internal)	Loss of Material/General, Pitting, Crevice, and Microbiologically Influenced Corrosion, and Fouling	One-Time Inspection	VII.H1-10	3.3.1-20	A
Tanks (Jacket Water Expansion)	Pressure Boundary	Carbon Steel	Air - Indoor (External)	Loss of Material/General Corrosion	External Surfaces Monitoring	VII.I-8	3.3.1-58	A
Tanks (Jacket Water Expansion)	Pressure Boundary	Carbon Steel	Closed Cycle Cooling Water (Internal)	Loss of Material/General, Pitting and Crevice Corrosion	Closed-Cycle Cooling Water System	VII.H2-23	3.3.1-47	B
Tanks (Lube Oil)	Pressure Boundary	Carbon Steel	Air - Indoor (External)	Loss of Material/General Corrosion	External Surfaces Monitoring	VII.I-8	3.3.1-58	A
Tanks (Lube Oil)	Pressure Boundary	Carbon Steel	Lubricating Oil (Internal)	Loss of Material/General, Pitting and Crevice Corrosion	Lubricating Oil Analysis	VII.H2-20	3.3.1-14	D
Tanks (Lube Oil)	Pressure Boundary	Carbon Steel	Lubricating Oil (Internal)	Loss of Material/General, Pitting and Crevice Corrosion	One-Time Inspection	VII.H2-20	3.3.1-14	C

Table 3.3.2-29 Standby Diesel Generators and Auxiliary Systems (Continued)

Component Type	Intended Function	Material	Environment	Aging Effect Requiring Management	Aging Management Programs	NUREG-1801 Vol. 2 Item	Table 1 Item	Notes
Thermowell	Pressure Boundary	Stainless Steel	Air - Indoor (External)	None	None	VII.J-15	3.3.1-94	A
Thermowell	Pressure Boundary	Stainless Steel	Air/Gas - Wetted (Internal)	Loss of Material/Pitting and Crevice Corrosion	Periodic Inspection	VII.D-4	3.3.1-54	E, 2
Thermowell	Pressure Boundary	Stainless Steel	Closed Cycle Cooling Water (Internal) > 140 F	Cracking/Stress Corrosion Cracking	Closed-Cycle Cooling Water System	VII.E4-11	3.3.1-46	B
Thermowell	Pressure Boundary	Stainless Steel	Closed Cycle Cooling Water (Internal) > 140 F	Loss of Material/Pitting and Crevice Corrosion	Closed-Cycle Cooling Water System	VII.C2-10	3.3.1-50	B
Thermowell	Pressure Boundary	Stainless Steel	Lubricating Oil (Internal)	Loss of Material/Pitting and Crevice Corrosion	Lubricating Oil Analysis	VII.H2-17	3.3.1-33	B, 3
Thermowell	Pressure Boundary	Stainless Steel	Lubricating Oil (Internal)	Loss of Material/Pitting and Crevice Corrosion	One-Time Inspection	VII.H2-17	3.3.1-33	A, 3
Valve Body	Leakage Boundary	Carbon Steel	Air - Indoor (External)	Loss of Material/General Corrosion	External Surfaces Monitoring	VII.D-3	3.3.1-57	A
Valve Body	Leakage Boundary	Carbon Steel	Closed Cycle Cooling Water (Internal)	Loss of Material/General, Pitting and Crevice Corrosion	Closed-Cycle Cooling Water System	VII.H2-23	3.3.1-47	B
Valve Body	Leakage Boundary	Carbon Steel	Fuel Oil (Internal)	Loss of Material/General, Pitting, Crevice, and Microbiologically Influenced Corrosion, and Fouling	Fuel Oil Chemistry	VII.H1-10	3.3.1-20	B
Valve Body	Leakage Boundary	Carbon Steel	Fuel Oil (Internal)	Loss of Material/General, Pitting, Crevice, and Microbiologically Influenced Corrosion, and Fouling	One-Time Inspection	VII.H1-10	3.3.1-20	A
Valve Body	Leakage Boundary	Carbon Steel	Lubricating Oil (Internal)	Loss of Material/General, Pitting and Crevice Corrosion	Lubricating Oil Analysis	VII.H2-20	3.3.1-14	B
Valve Body	Leakage Boundary	Carbon Steel	Lubricating Oil (Internal)	Loss of Material/General, Pitting and Crevice Corrosion	One-Time Inspection	VII.H2-20	3.3.1-14	A
Valve Body	Pressure Boundary	Carbon Steel	Air - Indoor (External)	Loss of Material/General Corrosion	External Surfaces Monitoring	VII.D-3	3.3.1-57	A

Table 3.3.2-29 Standby Diesel Generators and Auxiliary Systems (Continued)

Component Type	Intended Function	Material	Environment	Aging Effect Requiring Management	Aging Management Programs	NUREG-1801 Vol. 2 Item	Table 1 Item	Notes
Valve Body	Pressure Boundary	Carbon Steel	Air - Outdoor (External)	Loss of Material/General, Pitting and Crevice Corrosion	External Surfaces Monitoring	VII.H1-8	3.3.1-60	A
Valve Body	Pressure Boundary	Carbon Steel	Air/Gas - Wetted (Internal)	Loss of Material/General, Pitting and Crevice Corrosion	Inspection of Internal Surfaces in Miscellaneous Piping and Ducting Components	VII.H2-21	3.3.1-71	A
Valve Body	Pressure Boundary	Carbon Steel	Closed Cycle Cooling Water (Internal)	Loss of Material/General, Pitting and Crevice Corrosion	Closed-Cycle Cooling Water System	VII.H2-23	3.3.1-47	B
Valve Body	Pressure Boundary	Carbon Steel	Fuel Oil (Internal)	Loss of Material/General, Pitting, Crevice, and Microbiologically Influenced Corrosion, and Fouling	Fuel Oil Chemistry	VII.H1-10	3.3.1-20	B
Valve Body	Pressure Boundary	Carbon Steel	Fuel Oil (Internal)	Loss of Material/General, Pitting, Crevice, and Microbiologically Influenced Corrosion, and Fouling	One-Time Inspection	VII.H1-10	3.3.1-20	A
Valve Body	Pressure Boundary	Carbon Steel	Lubricating Oil (Internal)	Loss of Material/General, Pitting and Crevice Corrosion	Lubricating Oil Analysis	VII.H2-20	3.3.1-14	B
Valve Body	Pressure Boundary	Carbon Steel	Lubricating Oil (Internal)	Loss of Material/General, Pitting and Crevice Corrosion	One-Time Inspection	VII.H2-20	3.3.1-14	A
Valve Body	Pressure Boundary	Carbon Steel	Treated Water (Internal)	Loss of Material/General, Pitting and Crevice Corrosion	One-Time Inspection	VII.E3-18	3.3.1-17	A
Valve Body	Pressure Boundary	Carbon Steel	Treated Water (Internal)	Loss of Material/General, Pitting and Crevice Corrosion	Water Chemistry	VII.E3-18	3.3.1-17	B
Valve Body	Pressure Boundary	Stainless Steel	Air - Indoor (External)	None	None	VII.J-15	3.3.1-94	A
Valve Body	Pressure Boundary	Stainless Steel	Air/Gas - Dry (Internal)	None	None	VII.J-18	3.3.1-98	A

Table 3.3.2-29 Standby Diesel Generators and Auxiliary Systems (Continued)

Component Type	Intended Function	Material	Environment	Aging Effect Requiring Management	Aging Management Programs	NUREG-1801 Vol. 2 Item	Table 1 Item	Notes
Valve Body	Pressure Boundary	Stainless Steel	Closed Cycle Cooling Water (Internal) > 140 F	Cracking/Stress Corrosion Cracking	Closed-Cycle Cooling Water System	VII.E4-11	3.3.1-46	B
Valve Body	Pressure Boundary	Stainless Steel	Closed Cycle Cooling Water (Internal) > 140 F	Loss of Material/Pitting and Crevice Corrosion	Closed-Cycle Cooling Water System	VII.C2-10	3.3.1-50	B
Valve Body	Pressure Boundary	Stainless Steel	Fuel Oil (Internal)	Loss of Material/Pitting, Crevice, and Microbiologically Influenced Corrosion	Fuel Oil Chemistry	VII.H1-6	3.3.1-32	B
Valve Body	Pressure Boundary	Stainless Steel	Fuel Oil (Internal)	Loss of Material/Pitting, Crevice, and Microbiologically Influenced Corrosion	One-Time Inspection	VII.H1-6	3.3.1-32	A
Valve Body	Pressure Boundary	Stainless Steel	Lubricating Oil (Internal)	Loss of Material/Pitting and Crevice Corrosion	Lubricating Oil Analysis	VII.H2-17	3.3.1-33	B, 3
Valve Body	Pressure Boundary	Stainless Steel	Lubricating Oil (Internal)	Loss of Material/Pitting and Crevice Corrosion	One-Time Inspection	VII.H2-17	3.3.1-33	A, 3
Valve Body	Pressure Boundary	Stainless Steel	Treated Water (Internal)	Loss of Material/Pitting and Crevice Corrosion	One-Time Inspection	VII.E3-15	3.3.1-24	A
Valve Body	Pressure Boundary	Stainless Steel	Treated Water (Internal)	Loss of Material/Pitting and Crevice Corrosion	Water Chemistry	VII.E3-15	3.3.1-24	B
Valve Body	Structural Support	Stainless Steel	Air - Indoor (External)	None	None	VII.J-15	3.3.1-94	A
Valve Body	Structural Support	Stainless Steel	Air/Gas - Dry (Internal)	None	None	VII.J-18	3.3.1-98	A

Notes	Definition of Note
A	Consistent with NUREG-1801 item for component, material, environment, and aging effect. AMP is consistent with NUREG-1801 AMP.
B	Consistent with NUREG-1801 item for component, material, environment, and aging effect. AMP takes some exceptions to NUREG-1801 AMP.
C	Component is different, but consistent with NUREG-1801 item for material, environment, and aging effect. AMP is consistent with NUREG-1801 AMP.
D	Component is different, but consistent with NUREG-1801 item for material, environment, and aging effect. AMP takes some exceptions to NUREG-1801 AMP.
E	Consistent with NUREG-1801 item for material, environment and aging effect, but a different aging management program is credited or NUREG-1801 identifies a plant-specific aging management program.
F	Material not in NUREG-1801 for this component.
G	Environment not in NUREG-1801 for this component and material.
H	Aging effect not in NUREG-1801 for this component, material and environment combination.
I	Aging effect in NUREG-1801 for this component, material and environment combination is not applicable.
J	Neither the component nor the material and environment combination is evaluated in NUREG-1801.

Plant Specific Notes:

1. NUREG-1801 specifies a plant-specific program. The Periodic Inspection program is used to manage the aging effects(s) applicable to this component type, material, and environment combination.

2. The Periodic Inspection program is substituted to manage the aging effects(s) applicable to this component type, material, and environment combination.

3. Loss of material due to microbiologically influenced corrosion is not applicable for stainless steel components in a Lubricating Oil environment. Industry and plant operating experience indicates that the potential for significant degradation of lubricating oil systems due to microbiologically influenced corrosion is minimal. Lubricating oil systems are maintained to high cleanliness standards by design. Lubricating oil formulations include corrosion inhibitors, and the potential for water and contaminant intrusion is low compared to fuel oil systems; where the bulk storage, delivery and transport of the fuel oil increases the likelihood of moisture and microorganism contamination.

4. NUREG-1801 specifies a plant-specific program. The Inspection of Internal Surfaces in Miscellaneous Piping and Ducting Components program is used to manage the aging effects(s) applicable to this component type, material, and environment combination.

Table 3.3.2-30
Standby Liquid Control System
Summary of Aging Management Evaluation

Table 3.3.2-30 Standby Liquid Control System

Component Type	Intended Function	Material	Environment	Aging Effect Requiring Management	Aging Management Programs	NUREG-1801 Vol. 2 Item	Table 1 Item	Notes
Bolting	Mechanical Closure	Carbon and Low Alloy Steel Bolting	Air - Indoor (External)	Loss of Material/General, Pitting and Crevice Corrosion	Bolting Integrity	VII.I-4	3.3.1-43	B
Bolting	Mechanical Closure	Carbon and Low Alloy Steel Bolting	Air - Indoor (External)	Loss of Preload/Thermal Effects, Gasket Creep, and Self-Loosening	Bolting Integrity	VII.I-5	3.3.1-45	B
Bolting (Class 1)	Mechanical Closure	Carbon and Low Alloy Steel Bolting	Air - Indoor (External)	Loss of Material/General, Pitting and Crevice Corrosion	Bolting Integrity	V.E-4	3.2.1-23	B
Bolting (Class 1)	Mechanical Closure	Carbon and Low Alloy Steel Bolting	Air - Indoor (External)	Loss of Preload/Thermal Effects, Gasket Creep, and Self-Loosening	Bolting Integrity	IV.C1-10	3.1.1-52	B
Class 1 Piping, Fittings and Branch Connections < NPS 4"	Pressure Boundary	Stainless Steel	Air - Indoor (External)	None	None	IV.E-2	3.1.1-86	A
Class 1 Piping, Fittings and Branch Connections < NPS 4"	Pressure Boundary	Stainless Steel	Treated Water (Internal) > 140 F	Cracking/Stress Corrosion Cracking, Thermal and Mechanical Loading	ASME Section XI Inservice Inspection, Subsections IWB, IWC, and IWD	IV.C1-1	3.1.1-48	A
Class 1 Piping, Fittings and Branch Connections < NPS 4"	Pressure Boundary	Stainless Steel	Treated Water (Internal) > 140 F	Cracking/Stress Corrosion Cracking, Thermal and Mechanical Loading	Small-Bore Class 1 Piping Inspection	IV.C1-1	3.1.1-48	E, 1
Class 1 Piping, Fittings and Branch Connections < NPS 4"	Pressure Boundary	Stainless Steel	Treated Water (Internal) > 140 F	Cracking/Stress Corrosion Cracking, Thermal and Mechanical Loading	Water Chemistry	IV.C1-1	3.1.1-48	B

Table 3.3.2-30 Standby Liquid Control System (Continued)

Component Type	Intended Function	Material	Environment	Aging Effect Requiring Management	Aging Management Programs	NUREG-1801 Vol. 2 Item	Table 1 Item	Notes
Class 1 Piping, Fittings and Branch Connections < NPS 4"	Pressure Boundary	Stainless Steel	Treated Water (Internal) > 140 F	Loss of Material/Pitting and Crevice Corrosion	One-Time Inspection	IV.C1-14	3.1.1-15	A
Class 1 Piping, Fittings and Branch Connections < NPS 4"	Pressure Boundary	Stainless Steel	Treated Water (Internal) > 140 F	Loss of Material/Pitting and Crevice Corrosion	Water Chemistry	IV.C1-14	3.1.1-15	B
Electric Heater (Housing)	Pressure Boundary	Stainless Steel	Air - Indoor (External)	None	None	VII.J-15	3.3.1-94	A
Electric Heater (Housing)	Pressure Boundary	Stainless Steel	Sodium Pentaborate (Internal)	Loss of Material/Pitting and Crevice Corrosion	One-Time Inspection	VII.E2-1	3.3.1-30	A
Electric Heater (Housing)	Pressure Boundary	Stainless Steel	Sodium Pentaborate (Internal)	Loss of Material/Pitting and Crevice Corrosion	Water Chemistry	VII.E2-1	3.3.1-30	B
Flow Element	Leakage Boundary	Stainless Steel	Air - Indoor (External)	None	None	VII.J-15	3.3.1-94	A
Flow Element	Leakage Boundary	Stainless Steel	Treated Water (Internal)	Loss of Material/Pitting and Crevice Corrosion	One-Time Inspection	VII.E3-15	3.3.1-24	A
Flow Element	Leakage Boundary	Stainless Steel	Treated Water (Internal)	Loss of Material/Pitting and Crevice Corrosion	Water Chemistry	VII.E3-15	3.3.1-24	B
Piping and Fittings	Leakage Boundary	Carbon Steel	Air - Indoor (External)	Loss of Material/General Corrosion	External Surfaces Monitoring	VII.D-3	3.3.1-57	A
Piping and Fittings	Leakage Boundary	Carbon Steel	Treated Water (Internal)	Loss of Material/General, Pitting and Crevice Corrosion	One-Time Inspection	VII.E3-18	3.3.1-17	A
Piping and Fittings	Leakage Boundary	Carbon Steel	Treated Water (Internal)	Loss of Material/General, Pitting and Crevice Corrosion	Water Chemistry	VII.E3-18	3.3.1-17	B
Piping and Fittings	Leakage Boundary	Stainless Steel	Air - Indoor (External)	None	None	VII.J-15	3.3.1-94	A
Piping and Fittings	Leakage Boundary	Stainless Steel	Sodium Pentaborate (Internal)	Loss of Material/Pitting and Crevice Corrosion	One-Time Inspection	VII.E2-1	3.3.1-30	A
Piping and Fittings	Leakage Boundary	Stainless Steel	Sodium Pentaborate (Internal)	Loss of Material/Pitting and Crevice Corrosion	Water Chemistry	VII.E2-1	3.3.1-30	B
Piping and Fittings	Leakage Boundary	Stainless Steel	Treated Water (Internal)	Loss of Material/Pitting and Crevice Corrosion	One-Time Inspection	VII.E3-15	3.3.1-24	A

Table 3.3.2-30 Standby Liquid Control System (Continued)

Component Type	Intended Function	Material	Environment	Aging Effect Requiring Management	Aging Management Programs	NUREG-1801 Vol. 2 Item	Table 1 Item	Notes
Piping and Fittings	Leakage Boundary	Stainless Steel	Treated Water (Internal)	Loss of Material/Pitting and Crevice Corrosion	Water Chemistry	VII.E3-15	3.3.1-24	B
Piping and Fittings	Pressure Boundary	Stainless Steel	Air - Indoor (External)	None	None	VII.J-15	3.3.1-94	A
Piping and Fittings	Pressure Boundary	Stainless Steel	Sodium Pentaborate (External)	Loss of Material/Pitting and Crevice Corrosion	One-Time Inspection	VII.E2-1	3.3.1-30	A
Piping and Fittings	Pressure Boundary	Stainless Steel	Sodium Pentaborate (External)	Loss of Material/Pitting and Crevice Corrosion	Water Chemistry	VII.E2-1	3.3.1-30	B
Piping and Fittings	Pressure Boundary	Stainless Steel	Sodium Pentaborate (Internal)	Loss of Material/Pitting and Crevice Corrosion	One-Time Inspection	VII.E2-1	3.3.1-30	A
Piping and Fittings	Pressure Boundary	Stainless Steel	Sodium Pentaborate (Internal)	Loss of Material/Pitting and Crevice Corrosion	Water Chemistry	VII.E2-1	3.3.1-30	B
Piping and Fittings	Pressure Boundary	Stainless Steel	Treated Water (Internal)	Loss of Material/Pitting and Crevice Corrosion	One-Time Inspection	VII.E3-15	3.3.1-24	A
Piping and Fittings	Pressure Boundary	Stainless Steel	Treated Water (Internal)	Loss of Material/Pitting and Crevice Corrosion	Water Chemistry	VII.E3-15	3.3.1-24	B
Pump Casing (SLC Injection)	Pressure Boundary	Stainless Steel	Air - Indoor (External)	None	None	VII.J-15	3.3.1-94	A
Pump Casing (SLC Injection)	Pressure Boundary	Stainless Steel	Sodium Pentaborate (Internal)	Loss of Material/Pitting and Crevice Corrosion	One-Time Inspection	VII.E2-1	3.3.1-30	A
Pump Casing (SLC Injection)	Pressure Boundary	Stainless Steel	Sodium Pentaborate (Internal)	Loss of Material/Pitting and Crevice Corrosion	Water Chemistry	VII.E2-1	3.3.1-30	B
Tank (Standby Liquid Control)	Pressure Boundary	Stainless Steel	Air - Indoor (External)	None	None	VII.J-15	3.3.1-94	C
Tank (Standby Liquid Control)	Pressure Boundary	Stainless Steel	Sodium Pentaborate (Internal)	Loss of Material/Pitting and Crevice Corrosion	One-Time Inspection	VII.E2-1	3.3.1-30	C
Tank (Standby Liquid Control)	Pressure Boundary	Stainless Steel	Sodium Pentaborate (Internal)	Loss of Material/Pitting and Crevice Corrosion	Water Chemistry	VII.E2-1	3.3.1-30	D
Tank (Test)	Leakage Boundary	Stainless Steel	Air - Indoor (External)	None	None	VII.J-15	3.3.1-94	C
Tank (Test)	Leakage Boundary	Stainless Steel	Treated Water (Internal)	Loss of Material/Pitting and Crevice Corrosion	One-Time Inspection	VII.E3-15	3.3.1-24	C
Tank (Test)	Leakage Boundary	Stainless Steel	Treated Water (Internal)	Loss of Material/Pitting and Crevice Corrosion	Water Chemistry	VII.E3-15	3.3.1-24	D

Table 3.3.2-30 Standby Liquid Control System (Continued)

Component Type	Intended Function	Material	Environment	Aging Effect Requiring Management	Aging Management Programs	NUREG-1801 Vol. 2 Item	Table 1 Item	Notes
Thermowell	Pressure Boundary	Stainless Steel	Air - Indoor (External)	None	None	VII.J-15	3.3.1-94	A
Thermowell	Pressure Boundary	Stainless Steel	Sodium Pentaborate (Internal)	Loss of Material/Pitting and Crevice Corrosion	One-Time Inspection	VII.E2-1	3.3.1-30	A
Thermowell	Pressure Boundary	Stainless Steel	Sodium Pentaborate (Internal)	Loss of Material/Pitting and Crevice Corrosion	Water Chemistry	VII.E2-1	3.3.1-30	B
Valve Body	Leakage Boundary	Carbon Steel	Air - Indoor (External)	Loss of Material/General Corrosion	External Surfaces Monitoring	VII.D-3	3.3.1-57	A
Valve Body	Leakage Boundary	Carbon Steel	Treated Water (Internal)	Loss of Material/General, Pitting and Crevice Corrosion	One-Time Inspection	VII.E3-18	3.3.1-17	A
Valve Body	Leakage Boundary	Carbon Steel	Treated Water (Internal)	Loss of Material/General, Pitting and Crevice Corrosion	Water Chemistry	VII.E3-18	3.3.1-17	B
Valve Body	Leakage Boundary	Stainless Steel	Air - Indoor (External)	None	None	VII.J-15	3.3.1-94	A
Valve Body	Leakage Boundary	Stainless Steel	Treated Water (Internal)	Loss of Material/Pitting and Crevice Corrosion	One-Time Inspection	VII.E3-15	3.3.1-24	A
Valve Body	Leakage Boundary	Stainless Steel	Treated Water (Internal)	Loss of Material/Pitting and Crevice Corrosion	Water Chemistry	VII.E3-15	3.3.1-24	B
Valve Body	Pressure Boundary	Stainless Steel	Air - Indoor (External)	None	None	VII.J-15	3.3.1-94	A
Valve Body	Pressure Boundary	Stainless Steel	Sodium Pentaborate (Internal)	Loss of Material/Pitting and Crevice Corrosion	One-Time Inspection	VII.E2-1	3.3.1-30	A
Valve Body	Pressure Boundary	Stainless Steel	Sodium Pentaborate (Internal)	Loss of Material/Pitting and Crevice Corrosion	Water Chemistry	VII.E2-1	3.3.1-30	B
Valve Body	Pressure Boundary	Stainless Steel	Treated Water (Internal)	Loss of Material/Pitting and Crevice Corrosion	One-Time Inspection	VII.E3-15	3.3.1-24	A
Valve Body	Pressure Boundary	Stainless Steel	Treated Water (Internal)	Loss of Material/Pitting and Crevice Corrosion	Water Chemistry	VII.E3-15	3.3.1-24	B
Valve Body (Class 1)	Pressure Boundary	Stainless Steel	Air - Indoor (External)	None	None	IV.E-2	3.1.1-86	A
Valve Body (Class 1)	Pressure Boundary	Stainless Steel	Treated Water (Internal) > 140 F	Cracking/Stress Corrosion Cracking	ASME Section XI Inservice Inspection, Subsections IWB, IWC, and IWD	IV.C1-1	3.1.1-48	E, 2

Table 3.3.2-30 Standby Liquid Control System (Continued)

Component Type	Intended Function	Material	Environment	Aging Effect Requiring Management	Aging Management Programs	NUREG-1801 Vol. 2 Item	Table 1 Item	Notes
Valve Body (Class 1)	Pressure Boundary	Stainless Steel	Treated Water (Internal) > 140 F	Cracking/Stress Corrosion Cracking	Water Chemistry	IV.C1-1	3.1.1-48	E, 2
Valve Body (Class 1)	Pressure Boundary	Stainless Steel	Treated Water (Internal) > 140 F	Loss of Material/Pitting and Crevice Corrosion	One-Time Inspection	IV.C1-14	3.1.1-15	A
Valve Body (Class 1)	Pressure Boundary	Stainless Steel	Treated Water (Internal) > 140 F	Loss of Material/Pitting and Crevice Corrosion	Water Chemistry	IV.C1-14	3.1.1-15	B

Notes	Definition of Note
A	Consistent with NUREG-1801 item for component, material, environment, and aging effect. AMP is consistent with NUREG-1801 AMP.
B	Consistent with NUREG-1801 item for component, material, environment, and aging effect. AMP takes some exceptions to NUREG-1801 AMP.
C	Component is different, but consistent with NUREG-1801 item for material, environment, and aging effect. AMP is consistent with NUREG-1801 AMP.
D	Component is different, but consistent with NUREG-1801 item for material, environment, and aging effect. AMP takes some exceptions to NUREG-1801 AMP.
E	Consistent with NUREG-1801 item for material, environment and aging effect, but a different aging management program is credited or NUREG-1801 identifies a plant-specific aging management program.
F	Material not in NUREG-1801 for this component.
G	Environment not in NUREG-1801 for this component and material.
H	Aging effect not in NUREG-1801 for this component, material and environment combination.
I	Aging effect in NUREG-1801 for this component, material and environment combination is not applicable.
J	Neither the component nor the material and environment combination is evaluated in NUREG-1801.

Plant Specific Notes:

1. The NUREG-1801 "One-Time Inspection of ASME Code Class 1 Small-Bore Piping" aging management program is applicable only to plants that have not experienced cracking of ASME Code Class 1 small-bore piping. Based on previous Hope Creek operating experience with Class 1 small-bore pipe cracking, a new plant-specific periodic inspection program will be used. The "Small-Bore Class 1 Piping Inspection" aging management program is a plant-specific periodic program that will be implemented to manage cracking by periodic volumetric examinations of small-bore Class 1 piping.

2. The Water Chemistry and ASME Section XI In-service Inspection, Subsections IWB, IWC, and IWD aging management programs will be used to manage the aging effect of cracking in valve bodies < NPS 4".

Table 3.3.2-31
Torus Water Cleanup System
Summary of Aging Management Evaluation

Table 3.3.2-31 Torus Water Cleanup System

Component Type	Intended Function	Material	Environment	Aging Effect Requiring Management	Aging Management Programs	NUREG-1801 Vol. 2 Item	Table 1 Item	Notes
Bolting	Mechanical Closure	Carbon and Low Alloy Steel Bolting	Air - Indoor (External)	Loss of Material/General, Pitting and Crevice Corrosion	Bolting Integrity	VII.I-4	3.3.1-43	B
Bolting	Mechanical Closure	Carbon and Low Alloy Steel Bolting	Air - Indoor (External)	Loss of Preload/Thermal Effects, Gasket Creep, and Self-Loosening	Bolting Integrity	VII.I-5	3.3.1-45	B
Piping and Fittings	Leakage Boundary	Carbon Steel	Air - Indoor (External)	Loss of Material/General Corrosion	External Surfaces Monitoring	VII.D-3	3.3.1-57	A
Piping and Fittings	Leakage Boundary	Carbon Steel	Treated Water (Internal)	Loss of Material/Galvanic Corrosion	One-Time Inspection	VIII.E-7	3.4.1-5	C
Piping and Fittings	Leakage Boundary	Carbon Steel	Treated Water (Internal)	Loss of Material/Galvanic Corrosion	Water Chemistry	VIII.E-7	3.4.1-5	D
Piping and Fittings	Leakage Boundary	Carbon Steel	Treated Water (Internal)	Loss of Material/General, Pitting and Crevice Corrosion	One-Time Inspection	VII.E3-18	3.3.1-17	A
Piping and Fittings	Leakage Boundary	Carbon Steel	Treated Water (Internal)	Loss of Material/General, Pitting and Crevice Corrosion	Water Chemistry	VII.E3-18	3.3.1-17	B
Piping and Fittings	Leakage Boundary	Stainless Steel	Air - Indoor (External)	None	None	VII.J-15	3.3.1-94	A
Piping and Fittings	Leakage Boundary	Stainless Steel	Treated Water (Internal)	Loss of Material/Pitting and Crevice Corrosion	One-Time Inspection	VII.A4-11	3.3.1-24	A
Piping and Fittings	Leakage Boundary	Stainless Steel	Treated Water (Internal)	Loss of Material/Pitting and Crevice Corrosion	Water Chemistry	VII.A4-11	3.3.1-24	B
Piping and Fittings	Pressure Boundary	Carbon Steel	Air - Indoor (External)	Loss of Material/General Corrosion	External Surfaces Monitoring	VII.D-3	3.3.1-57	A
Piping and Fittings	Pressure Boundary	Carbon Steel	Treated Water (Internal)	Loss of Material/General, Pitting and Crevice Corrosion	One-Time Inspection	VII.E3-18	3.3.1-17	A

Table 3.3.2-31 Torus Water Cleanup System (Continued)

Component Type	Intended Function	Material	Environment	Aging Effect Requiring Management	Aging Management Programs	NUREG-1801 Vol. 2 Item	Table 1 Item	Notes
Piping and Fittings	Pressure Boundary	Carbon Steel	Treated Water (Internal)	Loss of Material/General, Pitting and Crevice Corrosion	Water Chemistry	VII.E3-18	3.3.1-17	B
Piping and Fittings	Pressure Boundary	Stainless Steel	Air - Indoor (External)	None	None	VII.J-15	3.3.1-94	A
Piping and Fittings	Pressure Boundary	Stainless Steel	Treated Water (Internal)	Loss of Material/Pitting and Crevice Corrosion	One-Time Inspection	VII.A4-11	3.3.1-24	A
Piping and Fittings	Pressure Boundary	Stainless Steel	Treated Water (Internal)	Loss of Material/Pitting and Crevice Corrosion	Water Chemistry	VII.A4-11	3.3.1-24	B
Piping and Fittings	Structural Support	Carbon Steel	Treated Water (External)	Loss of Material/General, Pitting and Crevice Corrosion	One-Time Inspection	VII.E3-18	3.3.1-17	A
Piping and Fittings	Structural Support	Carbon Steel	Treated Water (External)	Loss of Material/General, Pitting and Crevice Corrosion	Water Chemistry	VII.E3-18	3.3.1-17	B
Piping and Fittings	Structural Support	Carbon Steel	Treated Water (Internal)	Loss of Material/General, Pitting and Crevice Corrosion	One-Time Inspection	VII.E3-18	3.3.1-17	A
Piping and Fittings	Structural Support	Carbon Steel	Treated Water (Internal)	Loss of Material/General, Pitting and Crevice Corrosion	Water Chemistry	VII.E3-18	3.3.1-17	B
Piping and Fittings	Structural Support	Stainless Steel	Air - Indoor (External)	None	None	VII.J-15	3.3.1-94	A
Piping and Fittings	Structural Support	Stainless Steel	Air/Gas - Wetted (Internal)	Loss of Material/Pitting and Crevice Corrosion	Periodic Inspection	VII.D-4	3.3.1-54	E, 1
Piping and Fittings	Structural Support	Stainless Steel	Treated Water (External)	Loss of Material/Pitting and Crevice Corrosion	One-Time Inspection	VII.A4-11	3.3.1-24	A
Piping and Fittings	Structural Support	Stainless Steel	Treated Water (External)	Loss of Material/Pitting and Crevice Corrosion	Water Chemistry	VII.A4-11	3.3.1-24	B
Piping and Fittings	Structural Support	Stainless Steel	Treated Water (Internal)	Loss of Material/Pitting and Crevice Corrosion	One-Time Inspection	VII.A4-11	3.3.1-24	A
Piping and Fittings	Structural Support	Stainless Steel	Treated Water (Internal)	Loss of Material/Pitting and Crevice Corrosion	Water Chemistry	VII.A4-11	3.3.1-24	B
Pump Casing (Torus Water Clean-up)	Leakage Boundary	Stainless Steel	Air - Indoor (External)	None	None	VII.J-15	3.3.1-94	A

Table 3.3.2-31 Torus Water Cleanup System (Continued)

Component Type	Intended Function	Material	Environment	Aging Effect Requiring Management	Aging Management Programs	NUREG-1801 Vol. 2 Item	Table 1 Item	Notes
Pump Casing (Torus Water Clean-up)	Leakage Boundary	Stainless Steel	Treated Water (Internal)	Loss of Material/Pitting and Crevice Corrosion	One-Time Inspection	VII.A4-11	3.3.1-24	A
Pump Casing (Torus Water Clean-up)	Leakage Boundary	Stainless Steel	Treated Water (Internal)	Loss of Material/Pitting and Crevice Corrosion	Water Chemistry	VII.A4-11	3.3.1-24	B
Strainer	Structural Support	Stainless Steel	Treated Water (External)	Loss of Material/Pitting and Crevice Corrosion	One-Time Inspection	VII.A4-11	3.3.1-24	A
Strainer	Structural Support	Stainless Steel	Treated Water (External)	Loss of Material/Pitting and Crevice Corrosion	Water Chemistry	VII.A4-11	3.3.1-24	B
Valve Body	Leakage Boundary	Carbon Steel	Air - Indoor (External)	Loss of Material/General Corrosion	External Surfaces Monitoring	VII.D-3	3.3.1-57	A
Valve Body	Leakage Boundary	Carbon Steel	Treated Water (Internal)	Loss of Material/General, Pitting and Crevice Corrosion	One-Time Inspection	VII.E3-18	3.3.1-17	A
Valve Body	Leakage Boundary	Carbon Steel	Treated Water (Internal)	Loss of Material/General, Pitting and Crevice Corrosion	Water Chemistry	VII.E3-18	3.3.1-17	B
Valve Body	Leakage Boundary	Stainless Steel	Air - Indoor (External)	None	None	VII.J-15	3.3.1-94	A
Valve Body	Leakage Boundary	Stainless Steel	Treated Water (Internal)	Loss of Material/Pitting and Crevice Corrosion	One-Time Inspection	VII.A4-11	3.3.1-24	A
Valve Body	Leakage Boundary	Stainless Steel	Treated Water (Internal)	Loss of Material/Pitting and Crevice Corrosion	Water Chemistry	VII.A4-11	3.3.1-24	B
Valve Body	Pressure Boundary	Carbon Steel	Air - Indoor (External)	Loss of Material/General Corrosion	External Surfaces Monitoring	VII.D-3	3.3.1-57	A
Valve Body	Pressure Boundary	Carbon Steel	Treated Water (Internal)	Loss of Material/General, Pitting and Crevice Corrosion	One-Time Inspection	VII.E3-18	3.3.1-17	A
Valve Body	Pressure Boundary	Carbon Steel	Treated Water (Internal)	Loss of Material/General, Pitting and Crevice Corrosion	Water Chemistry	VII.E3-18	3.3.1-17	B
Valve Body	Pressure Boundary	Stainless Steel	Air - Indoor (External)	None	None	VII.J-15	3.3.1-94	A
Valve Body	Pressure Boundary	Stainless Steel	Treated Water (Internal)	Loss of Material/Pitting and Crevice Corrosion	One-Time Inspection	VII.A4-11	3.3.1-24	A

Table 3.3.2-31 Torus Water Cleanup System (Continued)

Component Type	Intended Function	Material	Environment	Aging Effect Requiring Management	Aging Management Programs	NUREG-1801 Vol. 2 Item	Table 1 Item	Notes
Valve Body	Pressure Boundary	Stainless Steel	Treated Water (Internal)	Loss of Material/Pitting and Crevice Corrosion	Water Chemistry	VII.A4-11	3.3.1-24	B

Notes	Definition of Note
A	Consistent with NUREG-1801 item for component, material, environment, and aging effect. AMP is consistent with NUREG-1801 AMP.
B	Consistent with NUREG-1801 item for component, material, environment, and aging effect. AMP takes some exceptions to NUREG-1801 AMP.
C	Component is different, but consistent with NUREG-1801 item for material, environment, and aging effect. AMP is consistent with NUREG-1801 AMP.
D	Component is different, but consistent with NUREG-1801 item for material, environment, and aging effect. AMP takes some exceptions to NUREG-1801 AMP.
E	Consistent with NUREG-1801 item for material, environment and aging effect, but a different aging management program is credited or NUREG-1801 identifies a plant-specific aging management program.
F	Material not in NUREG-1801 for this component.
G	Environment not in NUREG-1801 for this component and material.
H	Aging effect not in NUREG-1801 for this component, material and environment combination.
I	Aging effect in NUREG-1801 for this component, material and environment combination is not applicable.
J	Neither the component nor the material and environment combination is evaluated in NUREG-1801.

Plant Specific Notes:

1. The Periodic Inspection program is substituted to manage the aging effect(s) applicable to this component type, material, and environment combination

Table 3.3.2-32
Traversing Incore Probe System
Summary of Aging Management Evaluation

Table 3.3.2-32 Traversing Incore Probe System

Component Type	Intended Function	Material	Environment	Aging Effect Requiring Management	Aging Management Programs	NUREG-1801 Vol. 2 Item	Table 1 Item	Notes
Bolting	Mechanical Closure	Carbon and Low Alloy Steel Bolting	Air - Indoor (External)	Loss of Material/General, Pitting and Crevice Corrosion	Bolting Integrity	VII.I-4	3.3.1-43	B
Bolting	Mechanical Closure	Carbon and Low Alloy Steel Bolting	Air - Indoor (External)	Loss of Preload/Thermal Effects, Gasket Creep, and Self-Loosening	Bolting Integrity	VII.I-5	3.3.1-45	B
Piping and Fittings	Pressure Boundary	Stainless Steel	Air - Indoor (External)	None	None	VII.J-15	3.3.1-94	A
Piping and Fittings	Pressure Boundary	Stainless Steel	Air/Gas - Dry (Internal)	None	None	VII.J-18	3.3.1-98	A
Piping and Fittings	Structural Support	Stainless Steel	Air - Indoor (External)	None	None	VII.J-15	3.3.1-94	A
Piping and Fittings	Structural Support	Stainless Steel	Air/Gas - Dry (Internal)	None	None	VII.J-18	3.3.1-98	A
Valve Body	Pressure Boundary	Carbon Steel	Air - Indoor (External)	Loss of Material/General Corrosion	External Surfaces Monitoring	VII.D-3	3.3.1-57	A
Valve Body	Pressure Boundary	Carbon Steel	Air/Gas - Dry (Internal)	None	None	VII.J-22	3.3.1-98	A
Valve Body	Pressure Boundary	Stainless Steel	Air - Indoor (External)	None	None	VII.J-15	3.3.1-94	A
Valve Body	Pressure Boundary	Stainless Steel	Air/Gas - Dry (Internal)	None	None	VII.J-18	3.3.1-98	A

Notes	Definition of Note
A	Consistent with NUREG-1801 item for component, material, environment, and aging effect. AMP is consistent with NUREG-1801 AMP.
B	Consistent with NUREG-1801 item for component, material, environment, and aging effect. AMP takes some exceptions to NUREG-1801 AMP.
C	Component is different, but consistent with NUREG-1801 item for material, environment, and aging effect. AMP is consistent with NUREG-1801 AMP.
D	Component is different, but consistent with NUREG-1801 item for material, environment, and aging effect. AMP takes some exceptions to NUREG-1801 AMP.
E	Consistent with NUREG-1801 item for material, environment and aging effect, but a different aging management program is credited or NUREG-1801 identifies a plant-specific aging management program.
F	Material not in NUREG-1801 for this component.
G	Environment not in NUREG-1801 for this component and material.
H	Aging effect not in NUREG-1801 for this component, material and environment combination.
I	Aging effect in NUREG-1801 for this component, material and environment combination is not applicable.
J	Neither the component nor the material and environment combination is evaluated in NUREG-1801.

Plant Specific Notes:

None.